Japan International Cooperation Agency (JICA)

Earthquake Reconstruction and Rehabilitation Authority (ERRA)

Urgent Rehabilitation Project: West Bank Bypass Design

Under the Urgent Development Study on

Rehabilitation and Reconstruction in Muzaffarabad City

In the Islamic Republic of Pakistan

FINAL REPORT

APPENDIX H

COST ESTIMATION

March 2008

NIPPON KOEI CO., LTD.

APPENDIX H
Table of Contents

APPENDIX H-1 PRICED BILL OF QUANTITY 9

(1) Package I 10
(2) Package II 39

APPENDIX H-2 ANALYSIS OF UNIT RATES FOR NALUCHI BRIDGE 62

(1) SCHEDULE OF UNIT RATES 63
(2) ANALYSIS OF UNIT RATES 77

APPENDIX H-3 ANALYSIS OF UNIT RATES FOR PACKAGE II 245

(1) SCHEDULE OF UNIT RATES 246
(2) ANALYSIS OF UNIT RATES 261

APPENDIX H-4 ANALYSIS OF UNIT RATES FOR MISCELLANEOUS ITEMS 351

(1)PACKAGE I 352
(2) PACKAGE II 391

APPENDIX H-5 ANALYSIS OF UNIT RATES ELECTRIC WORKS 402

APPENDIX H-6 ANALYSIS OF UNIT RATES ELECTRIC WORKS 433

(1)PACKAGE I 434
(2) PACKAGE II 438

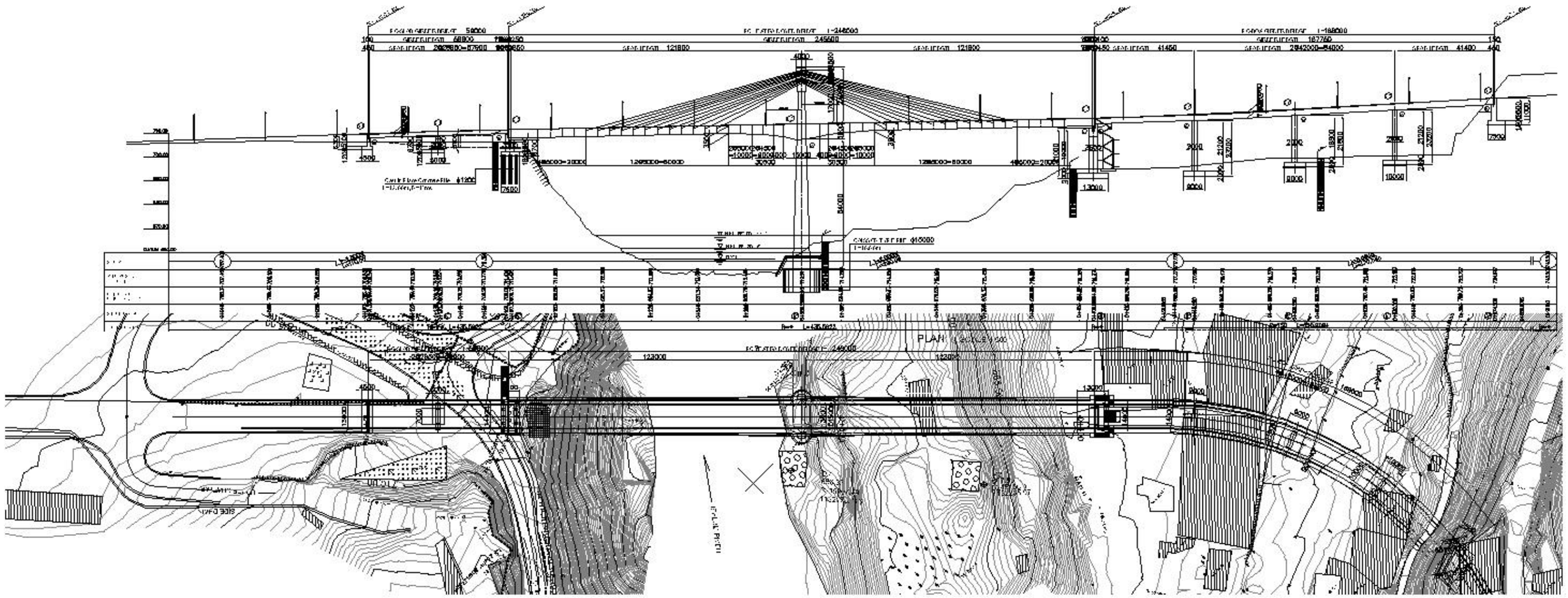
PLAN

CONSTRUCTION SCHEDULE FOR PACKAGE I

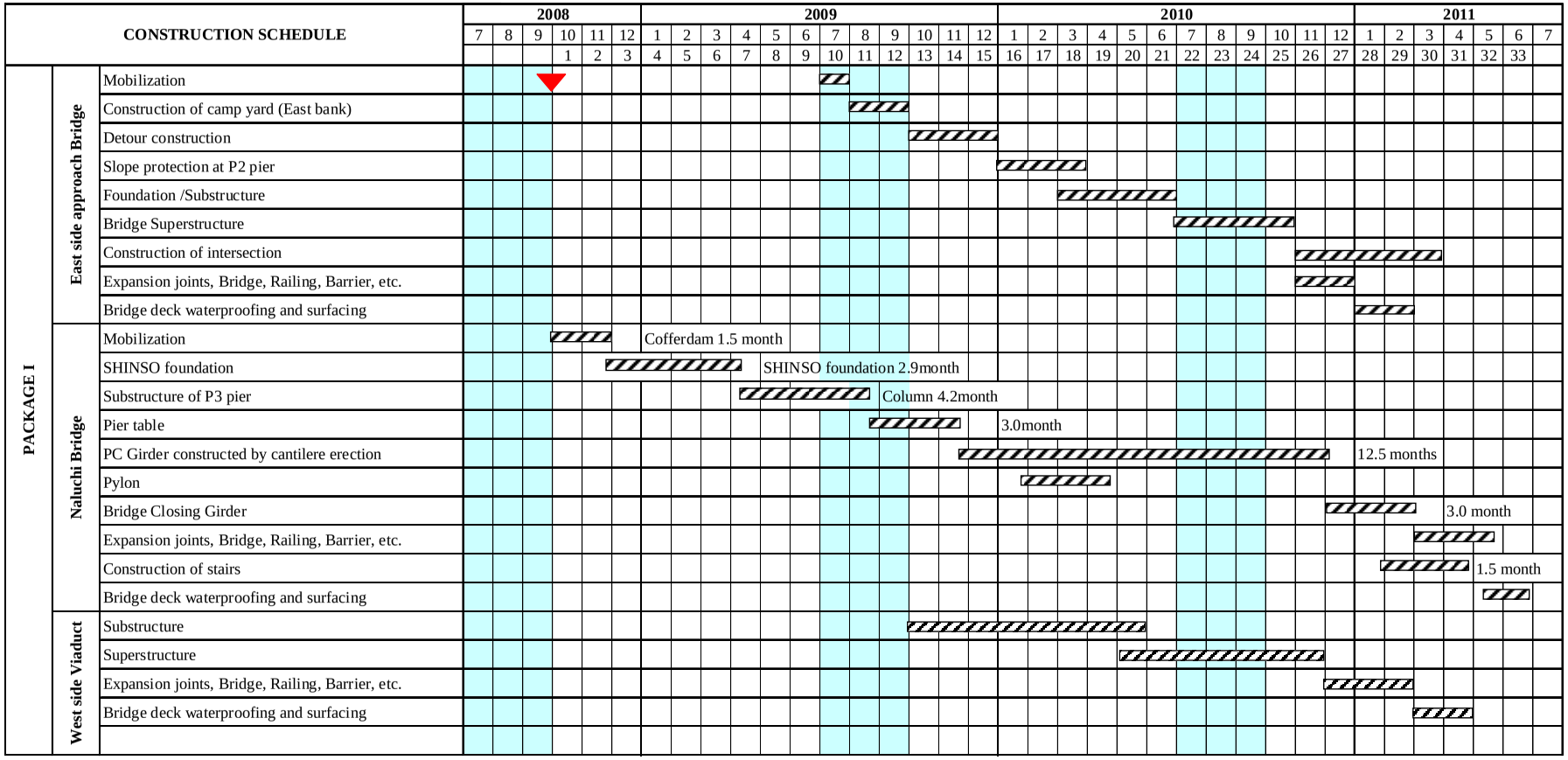

Notice to Commencement

CONSTRUCTION SCHEDULE (PACKAGE II)

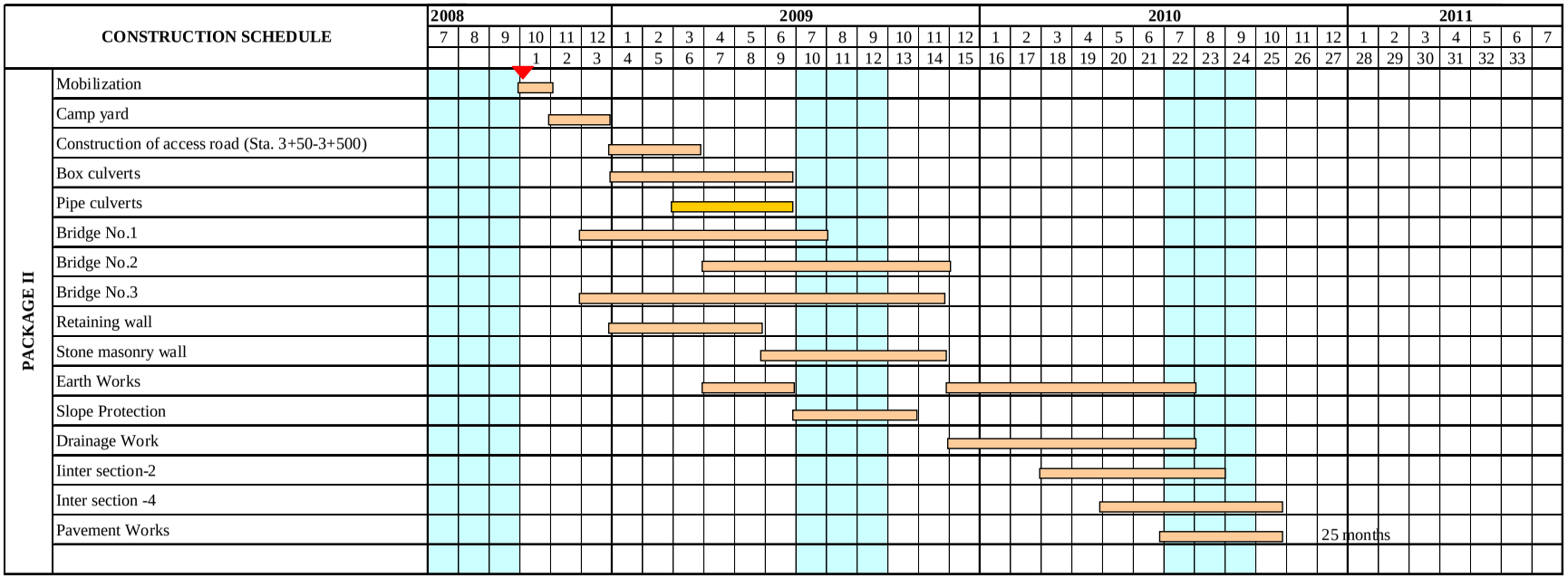

Notice to Commencement

ANNEX 8-1 : PROPOSED BORROW AND SPOIL AREA

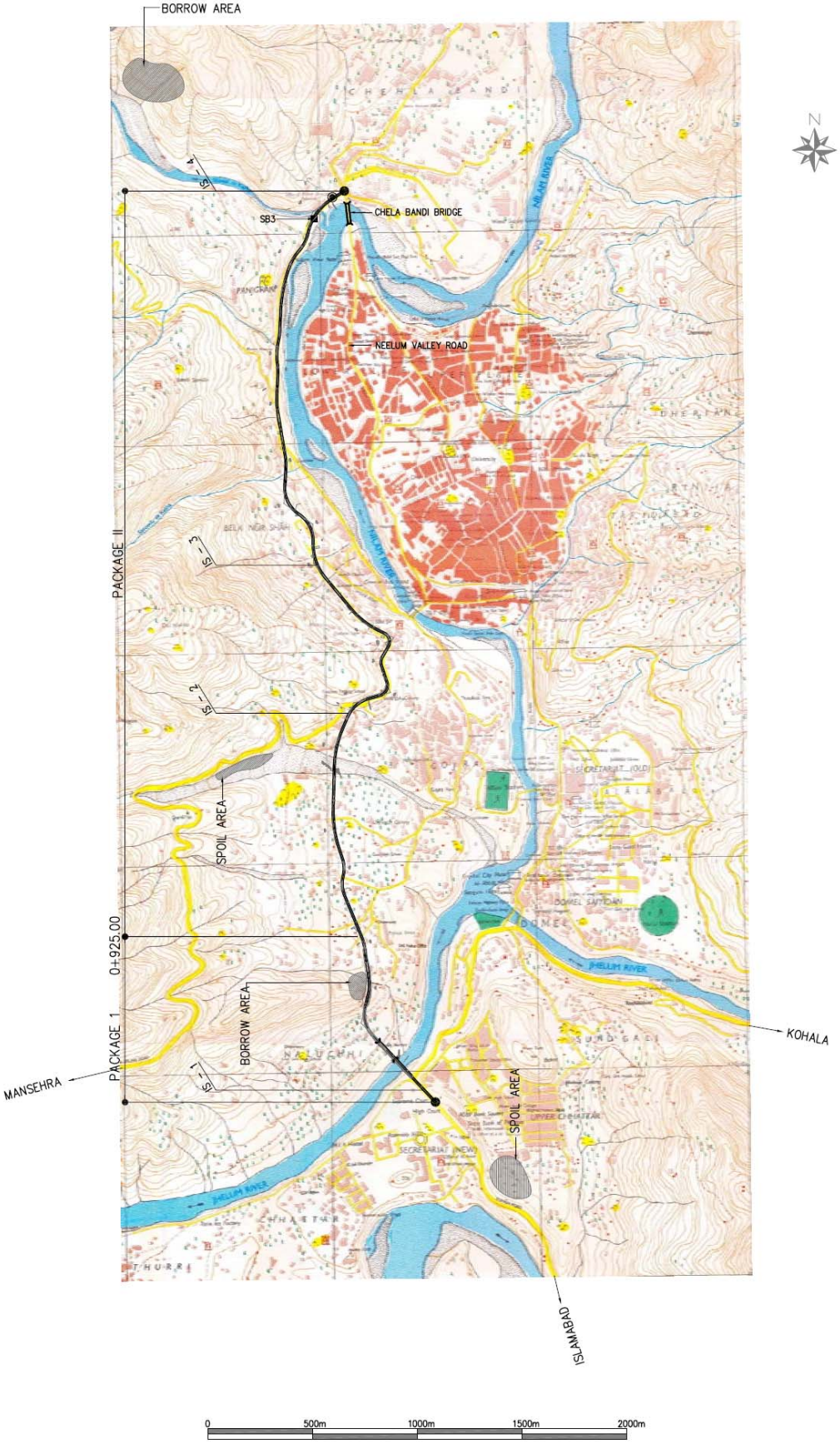

ANNEX 8 - 2 : DETOUR AT INTERSECTION 1

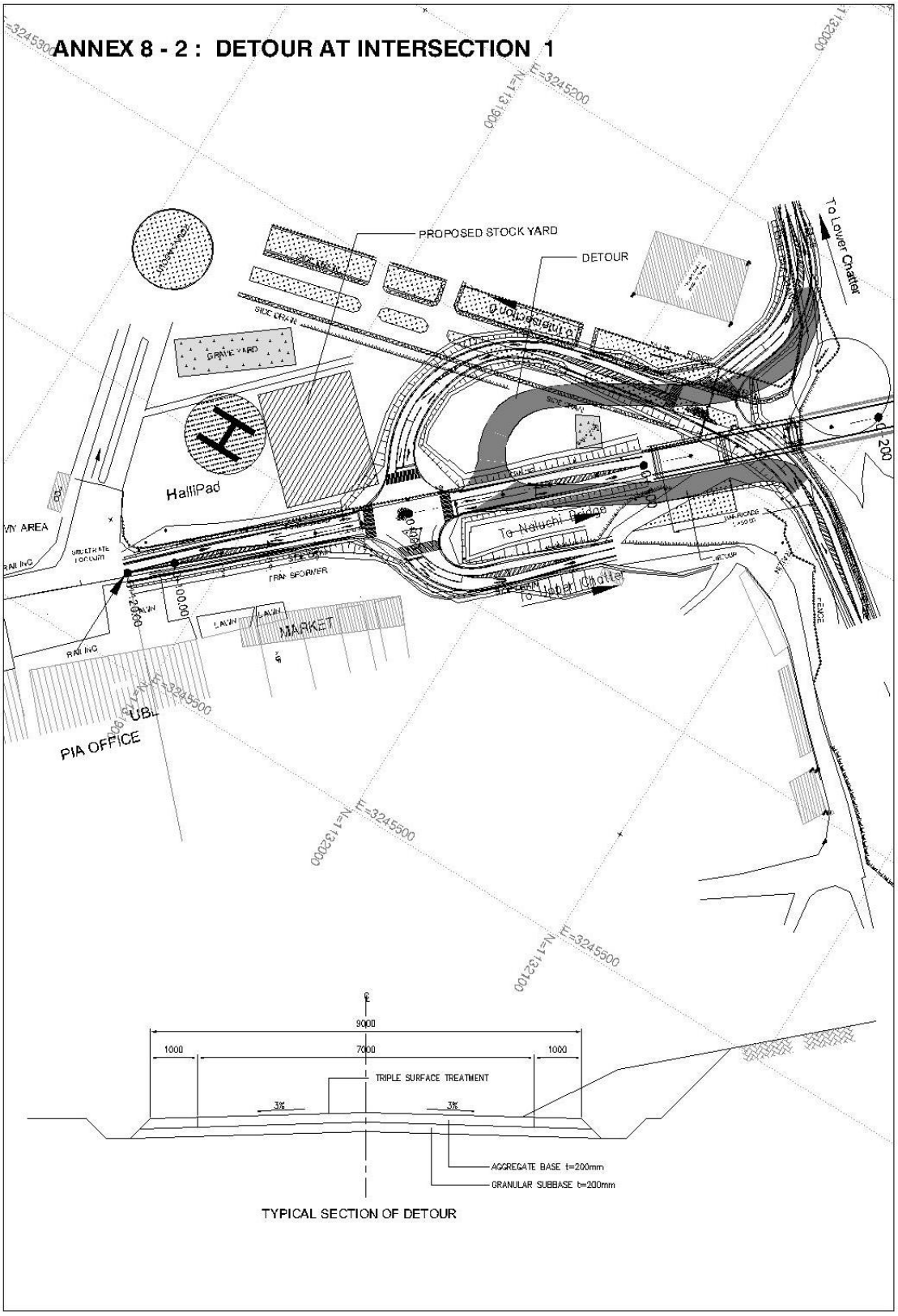

ANNEX 8 - 3 : PLANT YARD ACCESS ROAD TO PIER 3 FOR NALUCHI BRIDGE CONSTRUCTION

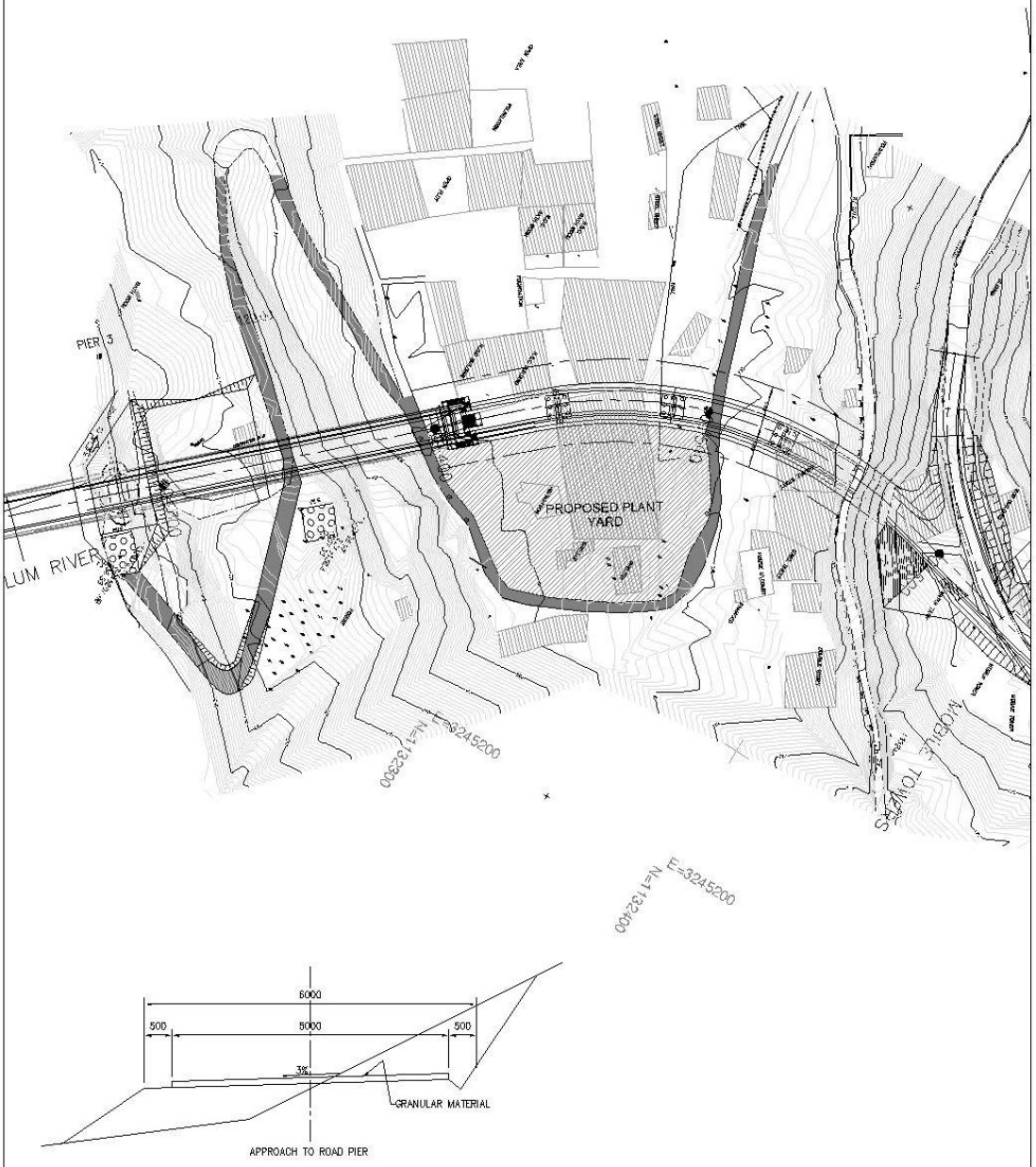

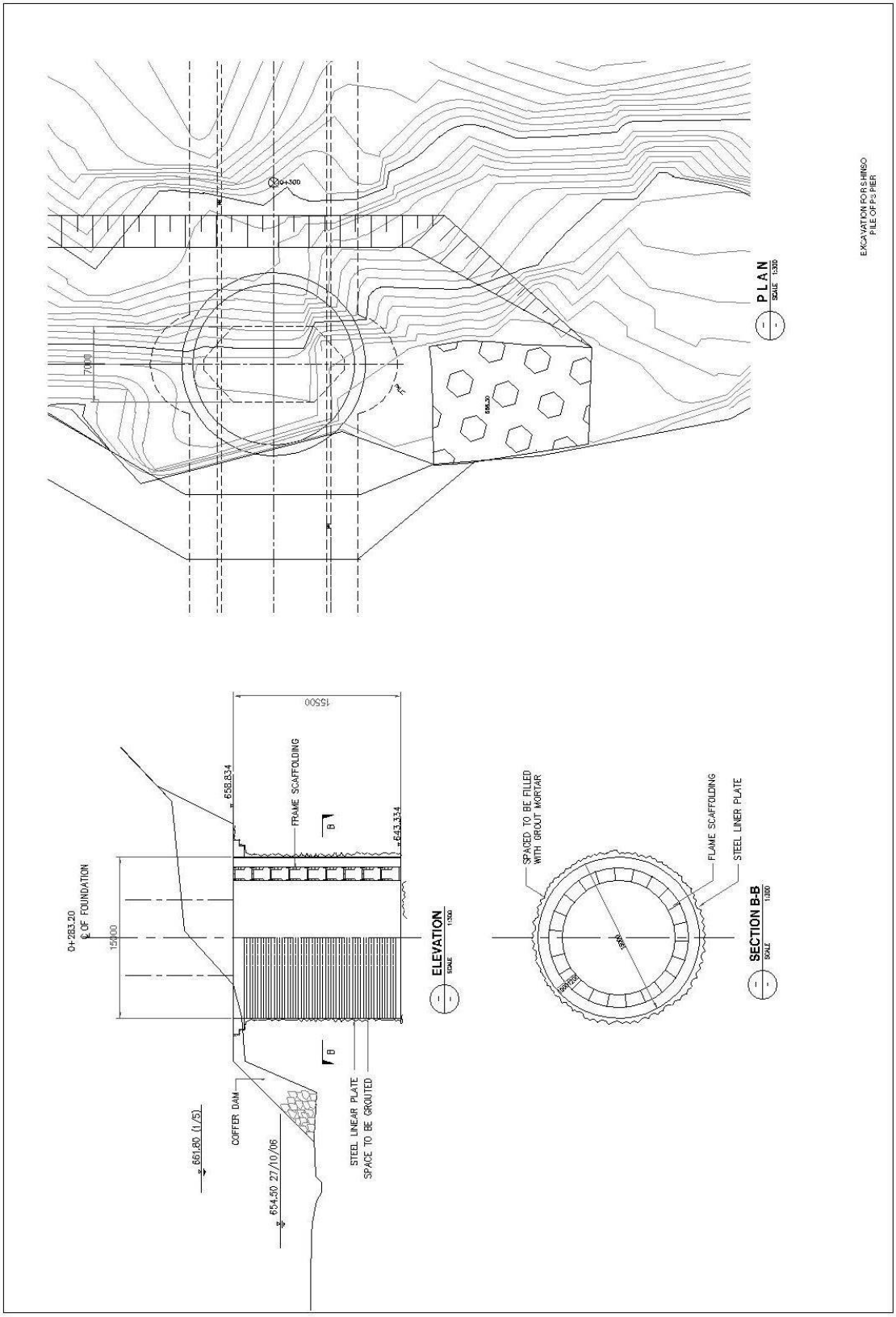
EXCAVATION FOR SHINSO
PILE OF PIER
PLAN
SCALE 1:300
0+300
7000
ELEVATION
SCALE 1:300
0+283.20
℄ OF FOUNDATION
15000
15500
658.834
643.334
FRAME SCAFFOLDING
B
661.80 (1/5)
COFFER DAM
654.50 27/10/06
STEEL LINEAR PLATE
SPACE TO BE GROUTED
SECTION B-B
SCALE 1:300
SPACED TO BE FILLED
WITH GROUT MORTAR
FLAME SCAFFOLDING
STEEL LINER PLATE

ANNEX 8 – 4 : PROPOSED SITE OFFICE AND ACCESS ROAD
(PACKAGE II)

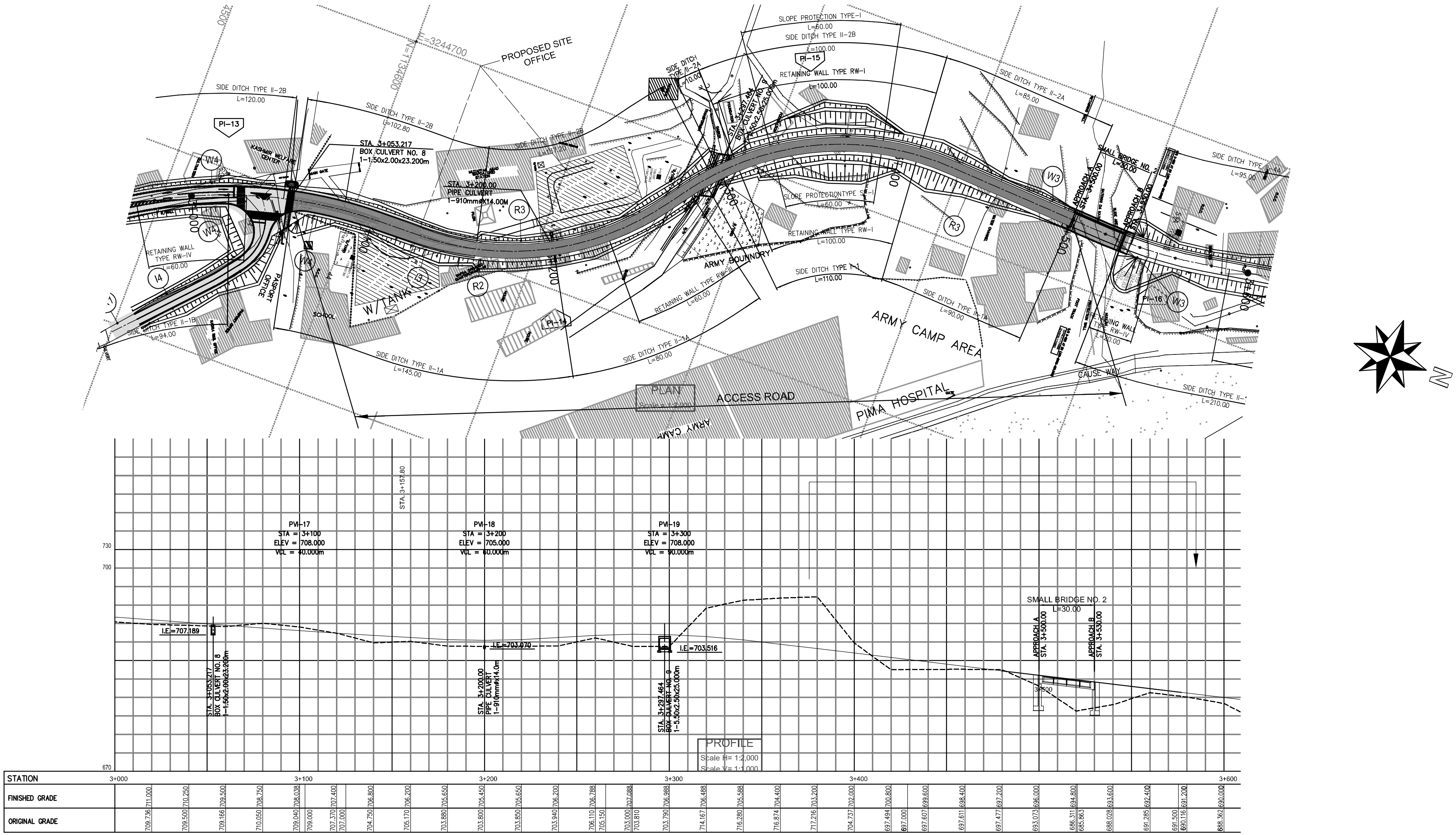

APPENDIX H-1

PRICED BILL OF QUANTITY

(1) PACKAGE I

SUMMARY OF QUANTITIES

BILL NO.	DESCRIPTION OF WORK	AMOUNT (Rs)
1	EARTHWORK	12,297,232
2	SUBBASE AND BASE	9,356,340
3	SURFACE COURSE AND PAVEMENT	5,960,128
4	STRUCTURES	
4a	EAST SIDE APPROACH VIADUCT	41,041,846
4b	NALUCHI BRIDGE	512,045,924
4c	WEST SIDE APPROACH VIADUCT	147,107,197
4d	BOX CULVERT	992,972
4e	RETAINING WALL	19,410,923
5	DRAINAGE AND EROSION WORKS	12,271,082
6	ANCILLARY WORKS	15,085,710
7	MISCELLANEOUS	165,512,401
8	ELECTRICAL WORKS	13,684,372
	SUB-TOTAL OF BILLS	**954,766,126**
9	PROVISIONAL SUM	**27,408,387**
	DAYWORK	27,408,387
	TOTAL	**982,174,513**
	INCOME TAX	**58,930,471**
	CONSTRUCTION COST	**1,041,104,984**

WEST BANK BYPASS CONSTRUCTION PROJECT (PACKAGE I)

BILL No. 1 EARTHWORK

Bill No.	Item No.	Description	Unit	Quantity	Rate (Rs)	Amount (Rs)
		Clearing and grubbing				
1.1	101	Clearing and grubbing	SM	100	13.47	1,347
		Removal of trees				
1.2	102a	Removal of trees, 150-300mm girth	EACH	50	221.00	11,050
1.3	102b	Removal of trees, 301-600mm girth	EACH	30	571.30	17,139
1.4	102c	Removal of trees, 601mm or over girth	EACH	10	2,285.24	22,852
		Excavation of Unsuitable or Surplus Material				
		Excavate unsuitable rock material in				
1.5	106b	(iii) Soft rock	CM	3,146	324.73	1,021,589
1.6	106c	Excavate surplus common material	CM	51,328	153.03	7,854,934
		Formation of Embankment				
1.7	108a	Formation of embankment from roadway excavation in common material	CM	6,445	227.53	1,466,427
1.8	SP108f	Overhaul	KM-CM	76,992	16.03	1,234,361
		Subgrade Preparation				
	109b	Subgrade preparation in existing road:				
1.9		(i) With fill less than 30 cms	SM	7,901	59.97	473,788
		Improved Subgrade				
1.10	110	Improved Subgrade	CM	798	242.79	193,746
TOTAL FOR BILL NO. 1 (Carried forward to Summary of Bill of Quantities)						12,297,232

WEST BANK BYPASS CONSTRUCTION PROJECT (PACKAGE I)

Bill No. 2: SUBBASE AND BASE

Bill No.	Item No.	Description	Unit	Quantity	Rate (Rs)	Amount (Rs)
		Granular subbase				
2.1	201	Granular subbase for carriageway	CM	1,616	965.31	1,559,938
		Aggregate Base Course				
2.3	202	Aggregate base for carriageway	CM	1,356	1,316.54	1,785,226
		Scarification of Existing Road/Breaking of Road Pavement				
2.3	209b	Scarification of existing road pavement	SM	7,682	27.35	210,081
		Asphalt Concrete Binder Course				
2.4	214	Asphalt concrete binder course	CM	746	7,776.27	5,801,094
TOTAL FOR BILL NO. 2 (Carried forward to Summary of Bill of Quantities)						9,356,340

WEST BANK BYPASS CONSTRUCTION PROJECT (PACKAGE I)

Bill No. 3: SURFACE COURSE AND PAVEMENT

Bill No.	Item No.	Description	Unit	Quantity	Rate (Rs)	Amount (Rs)
		Bituminous Prime Coat				
3.1	302	Bitumnous prime coat	SM	12,188	43.36	528,486
		Bituminous tack coat				
3.2	303	Bituminous tack coat	SM	10,652	18.16	193,447
		Asphalt Concrete Wearing Course-Plant Mix				
3.3	305a1	Asphaltic concrete for wearing course (Class A)	CM	596	8,601.30	5,126,378
3.4	305a2	Asphaltic concrete for wearing course on sidewalk (Class A)	CM	13	8,601.30	111,817
TOTAL FOR BILL NO. 3 (Carried forward to Summary of Bill of Quantities)						5,960,128

WEST BANK BYPASS CONSTRUCTION PROJECT (PACKAGE I)

Bill No. 4: STRUCTURES – 4a EAST SIDE APPROACH VIADUCT

Bill No.	Item No.	Description	Unit	Quantity	Rate(Rs)	Amount (Rs)
		Structural Excavation and Backfill				
4a.1	107a	Structural excavation in common material	CM	771	179.38	138,300
4a.2	107e	Common backfill	CM	600	113.85	68,308
		Bituminous Tack Coat				
4a.3	303a	Bituminous tack coat on bridge deck	SM	748	18.16	13,584
		Asphaltic Concrete Wearing Course-Plant Mix				
4a.4	305a1	Asphaltic concrete for wearing course (Class A) on carriageway	CM	46	8,601.30	392,701
4a.5	305a2	Asphaltic concrete for wearing course (Class A) on side walk	CM	8	8,601.30	68,316
4a.6	SP 313	Bridge deck waterproofing	SM	765	995.21	761,337
		Concrete				
4a.7	SP401a1	Concrete Class A0-1 in leveling concrete on deck slab	CM	25	7,778.04	194,451
4a.8	SP401b1	Concrete Class A1-1 in abutment wall and pier column	CM	206	7,778.04	1,602,277
4a.9	SP401b2	Concrete Class A1-2 in footing, pile cap	CM	205	7,800.43	1,599,089
4a.10	SP401e	Concrete Class D1 in hollow slab	CM	503	8,841.49	4,447,270
4a.11	SP401g	Lean concrete under abutments and piers	CM	15	7,305.11	109,577
		Falsework and Centering of Bridges				
4a.12	SP402a1	Supporting Type A (for PC hollow slab on east side approach viaduct)	LS			3,768,296
4a.13	SP402a5	Supporting Type E1 (for P1 pier head on east side approach viaduct)	LS			120,483
4a.14	SP 402b4	Scaffolding Type C (for abutment A1 and Pier P1)	LS			865,296
		Carried Over				14,149,284

WEST BANK BYPASS CONSTRUCTION PROJECT (PACKAGE I)

Bill No.	Item No.	Description	Unit	Quantity	Rate(Rs)	Amount (Rs)
		Formwork				
4a.15	SP403a	Formwork Type A (for abutment A1 and Pier P1)	SM	444	1,701.46	755,449
4a.16	SP403b1	Formwork Type B1 (for external of PC hollow deck slab on east side approach viaduct)	SM	1,012	1,333.68	1,349,684
4a.17	SP403b2	Formwork Type B2 (for internal of PC hollow deck slab on east side approach viaduct)	SM	1,413	2,196.42	3,103,542
		Steel Reinforcement				
4a.18	404b	(i) Reinforcement for substructure	TON	47.4	85,859.13	4,069,723
4a.19		(i) Reinforcement for superstructure	TON	51.9	85,342.77	4,429,290
		Prestressed Concrete Structures				
4a.20	SP 405c1	Installation of longitudinal PC cable, 12S-15.2mm, including grouting	TON	15.5	172,131.41	2,668,037
4a.21	SP 405c2	Stressing longitudinal PC cable from both sides, 12S-15.2mm, including installation of anchorages	EACH	40	14,266.81	570,672
		Joint and Bearing Devices				
4a.22	SP406e1	Elastomeric bearing pads, 620×470×95	EACH	6	138,064.55	828,387
4a.23	SP406e2	Elastomeric bearing pads, 770×570×65	EACH	3	141,221.22	423,664
4a.24	SP406g1	Anchor bars (Dia. 65mm)	EACH	20	87,456.01	1,749,120
4a.25	SP406g2	Anchor bars (Dia. 90mm)	EACH	10	127,235.93	1,272,359
4a.26	SP406h1	Expansion joint, 100mm	M	13	50,447.25	655,814
4a.27	SP406i	Drain pipe	M	22	1,852.45	40,754
4a.28	SP406j	Catch basin	EACH	4	3,655.99	14,624
4a.29	SP406j	Slab drain	EACH	12	9,249.59	110,995
		Piling				
4a.30	407k	Confirmatory boring	M	20.0	2,054.27	41,085
		Bridge Railing				
4a.31	SP401b1	Structural concrete for Class A1-1	CM	49.5	7,778.04	385,013
4a.32	404b	Reinforcement as per AASHTO M31 Grade 60	TON	10.7	85,859.13	918,693
		Carried Over				23,386,906

WEST BANK BYPASS CONSTRUCTION PROJECT (PACKAGE I)

Bill No.	Item No.	Description	Unit	Quantity	Rate(Rs)	Amount (Rs)
4a.33	SP403c	Formwork Type E for barrier, concrete railing	SM	424	2,196.42	931,282
4a.34	SP606c	Steel railing	M	118	20,519.34	2,421,282
		Pavement Marking				
4a.35	608h1	Pavement marking in reflective TP paint for lines of 15 cm width (White)	M	59	93.44	5,513
4a.36	608h2	Pavement marking in reflective TP paint for lines of 15 cm width (Yellow)	M	118	93.44	11,026
		Support for water pipe on Bridge				
4a.37	SP614a	Support for water pipe on Bridge Type A	EACH	12	11,379.42	136,553
						3,505,656
TOTAL FOR BILL NO. 4a (Carried forward to Summary of Bill of Quantities)						41,041,846

WEST BANK BYPASS CONSTRUCTION PROJECT (PACKAGE I)

Bill No. 4: STRUCTURES – 4a EAST SIDE APPROACH VIADUCT

Bill No.	Item No.	Description	Unit	Quantity	Rate(Rs)	Amount (Rs)
		Structural Excavation and Backfill				
4a.1	107a	Structural excavation in common material	CM	771	179.38	138,300
4a.2	107e	Common backfill	CM	600	113.85	68,308
		Bituminous Tack Coat				
4a.3	303a	Bituminous tack coat on bridge deck	SM	748	18.16	13,584
		Asphaltic Concrete Wearing Course-Plant Mix				
4a.4	305a1	Asphaltic concrete for wearing course (Class A) on carriageway	CM	46	8,601.30	392,701
4a.5	305a2	Asphaltic concrete for wearing course (Class A) on side walk	CM	8	8,601.30	68,316
4a.6	SP 313	Bridge deck waterproofing	SM	765	995.21	761,337
		Concrete				
4a.7	SP401a1	Concrete Class A0-1 in leveling concrete on deck slab	CM	25	7,778.04	194,451
4a.8	SP401b1	Concrete Class A1-1 in abutment wall and pier column	CM	206	7,778.04	1,602,277
4a.9	SP401b2	Concrete Class A1-2 in footing, pile cap	CM	205	7,800.43	1,599,089
4a.10	SP401e	Concrete Class D1 in hollow slab	CM	503	8,841.49	4,447,270
4a.11	SP401g	Lean concrete under abutments and piers	CM	15	7,305.11	109,577
		Falsework and Centering of Bridges				
4a.12	SP402a1	Supporting Type A (for PC hollow slab on east side approach viaduct)	LS			3,768,296
4a.13	SP402a5	Supporting Type E1 (for P1 pier head on east side approach viaduct)	LS			120,483
4a.14	SP 402b4	Scaffolding Type C (for abutment A1 and Pier P1)	LS			865,296
		Carried Over				14,149,284

WEST BANK BYPASS CONSTRUCTION PROJECT (PACKAGE I)

Bill No.	Item No.	Description	Unit	Quantity	Rate(Rs)	Amount (Rs)
		Formwork				
4a.15	SP403a	Formwork Type A (for abutment A1 and Pier P1)	SM	444	1,701.46	755,449
4a.16	SP403b1	Formwork Type B1 (for external of PC hollow deck slab on east side approach viaduct)	SM	1,012	1,333.68	1,349,684
4a.17	SP403b2	Formwork Type B2 (for internal of PC hollow deck slab on east side approach viaduct)	SM	1,413	2,196.42	3,103,542
		Steel Reinforcement				
4a.18	404b	(i) Reinforcement for substructure	TON	47.4	85,859.13	4,069,723
4a.19		(i) Reinforcement for superstructure	TON	51.9	85,342.77	4,429,290
		Prestressed Concrete Structures				
4a.20	SP 405c1	Installation of longitudinal PC cable, 12S-15.2mm, including grouting	TON	15.5	172,131.41	2,668,037
4a.21	SP 405c2	Stressing longitudinal PC cable from both sides, 12S-15.2mm, including installation of anchorages	EACH	40	14,266.81	570,672
		Joint and Bearing Devices				
4a.22	SP406e1	Elastomeric bearing pads, 620×470×95	EACH	6	138,064.55	828,387
4a.23	SP406e2	Elastomeric bearing pads, 770×570×65	EACH	3	141,221.22	423,664
4a.24	SP406g1	Anchor bars (Dia. 65mm)	EACH	20	87,456.01	1,749,120
4a.25	SP406g2	Anchor bars (Dia. 90mm)	EACH	10	127,235.93	1,272,359
4a.26	SP406h1	Expansion joint, 100mm	M	13	50,447.25	655,814
4a.27	SP406i	Drain pipe	M	22	1,852.45	40,754
4a.28	SP406j	Catch basin	EACH	4	3,655.99	14,624
4a.29	SP406j	Slab drain	EACH	12	9,249.59	110,995
		Piling				
4a.30	407k	Confirmatory boring	M	20.0	2,054.27	41,085
		Bridge Railing				
4a.31	SP401b1	Structural concrete for Class A1-1	CM	49.5	7,778.04	385,013
4a.32	404b	Reinforcement as per AASHTO M31 Grade 60	TON	10.7	85,859.13	918,693
		Carried Over				23,386,906

WEST BANK BYPASS CONSTRUCTION PROJECT (PACKAGE I)

Bill No.	Item No.	Description	Unit	Quantity	Rate(Rs)	Amount (Rs)
4a.33	SP403c	Formwork Type E for barrier, concrete railing	SM	424	2,196.42	931,282
4a.34	SP606c	Steel railing	M	118	20,519.34	2,421,282
		Pavement Marking				
4a.35	608h1	Pavement marking in reflective TP paint for lines of 15 cm width (White)	M	59	93.44	5,513
4a.36	608h2	Pavement marking in reflective TP paint for lines of 15 cm width (Yellow)	M	118	93.44	11,026
		Support for water pipe on Bridge				
4a.37	SP614a	Support for water pipe on Bridge Type A	EACH	12	11,379.42	136,553
						3,505,656
TOTAL FOR BILL NO. 4a (Carried forward to Summary of Bill of Quantities)						41,041,846

WEST BANK BYPASS CONSTRUCTION PROJECT (PACKAGE I)

Bill No. 4: STRUCTURES-4b Naluchi Bridge

Bill No.	Item No.	Description	Unit	Quantity	Rate(Rs)	Amount (Rs)
		Structural Excavation and Backfill				
4b.1	107a	Structural excavation in common material	CM	2,109	179.38	378,307
4b.1-1	107cii	Structura excavation in soft rock	CM	1,527	383.63	585,797
4b.2	107e	Common backfill	CM	1,385	113.85	157,677
4b.3	SP107f1	Structural excavation for SHINSO pile at P3 pier in soft rock	CM	1,697	2,838.08	4,816,230
4b.4	SP107f2	Structural excavation fro SHINSO pile at P3 pier in hard rock	CM	1,043	5,133.06	5,353,777
		Bituminous Tack Coat				
4b.5	303a	Bituminous tack coat on bridge deck waterproofing	SM	3,181	18.16	57,769
		Asphaltic Concrete Wearing Course-Plant mix				
4b.6	305a	Asphaltic concrete for wearing course (Class A) on carriageway	CM	191	8,601.30	1,639,615
4b.7	305a1	Asphaltic concrete for wearing course (Class A) on side walk	CM	36	8,601.30	308,795
4b.8	SP313	Bridge deck waterproofing	SM	3,231	995.21	3,215,032
		Concrete				
4b.9	SP401a1	Concrete Class A0-1 in leveling concrete on deck slab	CM	105	7,778.04	816,694
4b.10	SP401b1	Concrete Class A1-1 in abutment wall and pier column	CM	695	7,778.04	5,405,740
4b.11	SP401b2	Concrete Class A1-2 in footing, pile cap, Shinso foundation	CM	2,262	8,309.99	18,797,200
4b.12	SP401c3	Concrete Class A2-3 in Pier P3	CM	1,840	9,826.15	18,080,121
4b.13	SP401d	Concrete Class A3 in pylon	CM	382	10,393.13	3,970,174
4b.14	SP401f2	Concrete Class D2-2 for superstructure	CM	4,579	19,071.69	87,329,258
4b.15	SP401g	Lean concrete	CM	253	7,305.11	1,848,194
		Carried Over				152,760,381

WEST BANK BYPASS CONSTRUCTION PROJECT (PACKAGE I)

Bill No.	Item No.	Description	Unit	Quantity	Rate(Rs)	Amount (Rs)
		False Work and Centering for Bridges				
4b.16	SP402a2	Supporting Type B (for hanging support for girder end on Naluchi Bridge	LS			4,138,681
4b.17	SP402a3	Supporting Type C (for cantilever support for pier head on Pier 3)	LS			3,972,159
4b.18	SP402a7	Supporting Type E2 (for Pier4 pier head on Naluchi Bridge)	LS			832,212
4b.19	SP402b1	Scaffolding Type A1(for external of Pier 3)	LS			1,769,736
4b.20	SP402b2	Scaffolding Type A2 (for internal of Pier 3)	LS			537,340
4b.21	SP402b3	Scaffolding Type B (for pylon of Naluchi Bridge)	LS			2,436,373
4b.22	SP402b4	Scaffolding Type C (for Pier 2 and Pier 4 on Naluchi Bridge)	LS			109,068
		Formwork				
4b.23	SP403a	Formwork Type A (for Pier 2 and Pier 4)	SM	784	1,701.46	1,333,947
4b.24	SP403b3	Formwork type C1 (for external of Pier 3)	SM	1,765	1,193.07	2,105,764
4b.25	SP403b4	Formwork Type C2 (for internal of Pier 3)	SM	840	1,209.15	1,015,685
4b.26	SP403b5	Formwork type C3 (for pier table of at P3)	SM	1,110	4,119.17	4,572,277
4b.27	SP403b6	Formwork Type C4 (for end block of PC box girder)	SM	1,083	4,119.17	4,461,060
4b.28	SP403b7	Formwork Type C5 (for pylon of Naluchi Bridge)	SM	552	2,592.78	1,431,212
		Steel reinforcement				
	404b	Reinforcement as per AASHTO M31 Grade 60				
4b.29		(i) Reinforcement for cast-in-situ pile	TON	17.1	85,859.13	1,468,191
4b.30		(ii) P2, and P4 pier	TON	43.9	85,859.13	3,769,216
4b.31		(iii) P3 pier	TON	323.3	83,691.79	27,057,554
4b.32		(iv) PC Box girder	TON	553.9	84,805.60	46,973,820
4b.33		(v) Pylon	TON	101.5	84,805.60	8,607,768
		Carried Over				116,592,064

Bill No.	Item No.	Description	Unit	Quantity	Rate(Rs)	Amount (Rs)
4b.34		(vi) Mechanical Couplers	EACH	1,572	1,308.99	2,057,738
		Prestressed Concrete				
4b.35	SP405d1	Installation of longitudinal PC cable, 12S-15.2mm, including grouting	TON	91.6	349,326.52	31,998,309
4b.36	SP405d2	Stressing longitudinal PC cable 12S-15.2mm, including installation of live end anchorages	EACH	124	18,723.90	2,321,764
4b.37	SP405d3	Installation of dead end anchorage for longitudinal PC cable, 12S-15.2mm	EACH	12	8,009.12	96,109
4b.38	SP405d4	Stressing longitudinal PC cable 12S-15.2mm, including installation of live end anchorages (stressing from one end)	EACH	12	15,055.08	180,661
4b.38	SP405d5	Installation of transverse PC cable, 4S-15.2mm, including grouting	TON	33.2	383,670.83	12,737,872
4b.39	SP405d6	Stressing transverse PC cable 4S-15.2mm including installation of live end anchorage	EACH	482	6,526.40	3,145,725
4b.40	SP405d7	Installation of dead end anchorage for transverse PC cable 4S-15.2mm	EACH	482	3,363.72	1,621,311
4b.41	SP405d8	Installation of transverse PC cable, 12S-15.2mm, including grouting	TON	6.3	349,326.52	2,200,757
4b.42	SP405d9	Stressing transverse PC cable 12S-15.2mm, including installation of live end anchorage	EACH	38	15,055.08	572,093
4b.43	SP405d10	Installation of dead end anchorage for transverse PC cable 12S-15.2mm	EACH	38	8,009.12	304,347
4b.44	SP405d11	Installation of PC bar, 32mm including grouting	TON	2.8	783,266.52	2,193,146
4b.45	SP405d12	Stressing PC bar, 32mm including installation of live end anchorage	EACH	154	36,611.21	5,638,126
4b.46	SP405d13	Installation of dead end anchorage for PC bar, 32mm	EACH	154	22,955	3,535,146
4b.47	SP405d14	Jointing PC bar, 32mm	EACH	34	7,993.29	271,772
4b.48	SP405d15	Form traveller	EACH	2	14,817,318.50	29,634,637
		Stay cable				
4b.49	SP414a1	Installation of stay cable, 19S-15.2mm	TON	34.1	616,511.69	21,023,049
		Carried Over				119,532,561

WEST BANK BYPASS CONSTRUCTION PROJECT (PACKAGE I)

Bill No.	Item No.	Description	Unit	Quantity	Rate(Rs)	Amount (Rs)
4b.50	SP414a2	Installation of stay cable, 27S-15.2mm	TON	77.3	614,353.78	47,489,547
4b.51	SP414b1	Stressing stay cable, including installation of anchorage, 19-S15.2mm	EACH	28	457,568.24	12,811,911
4b.52	SP414b2	Stressing stay cable, 27S-15.2mm	EACH	28	544,643.83	15,250,027
		Joint and Bearing Devices				
4b.53	SP406e3	Bridge Bearing Pads (1070×1070×240)	EACH	4	408,291.43	1,633,166
4b.54	SP406g3	Anchor Bar (Dia. 125mm)	EACH	20	552,544.19	11,050,884
4b.55	SP406h2	Expansion joint, 160mm	M	14.0	279,123.43	3,907,728
4b.56	SP406h3	Expansion joint, 240mm	M	14.0	367,385.69	5,143,400
4b.57	SP406i	Drain Pipe	M	254	1,852.45	470,522
4b.58	SP406j	Catch basin	EACH	12	3,655.99	43,872
4b.59	SP406k	Slab drain	EACH	50	9,249.59	462,480
		Steel Structures				
4b.60	SP413a	(i) Steel frame for Pylon	EACH	2	484,012.04	968,024
4b.61	SP413c	(ii) Inspection ladder	LS			93,581.88
4b.62	SP413d	(iii) Manhole cover	EACH	1	26,816.00	26,816
4b.63	SP413f	(iv) Saddle	EACH	2	9,357,577.28	18,715,155
		Piling				
4b.64	407d	Cast-in-place concrete piles 1200mm dia. in gravel strata including concrete	M	168	16,851.36	2,831,029
4b.65	407k	Confirmatory boring at Pier2, 3 and 4	M	70	2,054.27	143,799
		Concrete Crib Work				
4b.66	SP513b	Concrete crib work Type B for P2 pier slope protection	SM	263	10,445.06	2,747,052
		Carried Over				123,788,993

WEST BANK BYPASS CONSTRUCTION PROJECT (PACKAGE I)

Bill No.	Item No.	Description	Unit	Quantity	Rate(Rs)	Amount (Rs)
		Bridge Railing				
4b.67	SP401b1	Structural concrete for Class A1-1	CM	209	7,778.04	1,625,611
4b.68	404b	Reinforcement as per AASHTO M31 Grade 60	TON	47.1	85,859.13	4,043,965
4b.69	SP606c	Steel railing	M	501	20,519.34	10,280,189
4b.70	SP403c	Formwork Type E for barrier, concrete railing, etc.	SM	1,785	2,196.42	3,920,610
		Pavement Marking				
4b.71	608h1	Pavement marking in reflective TP paint for lines of 15 cm width (White)	M	246	93.44	22,986
4b.72	608h2	Pavement marking in reflective TP paint for lines of 15 cm width (Yellow)	M	492	93.44	45,971
		Support for Water Pipe on Bridge				
4b.73	SP614b	Support for water pipe on Bridge Type B	EACH	66	13,415.52	885,424
4b.74	SP614c	Support for water pipe on Bridge Type C	EACH	3	6,679.22	20,038
		Stairs on bridge				
4b.75	SP615a	Stair to bridge deck at P2	LS			105,524
4b.76	SP615b	Stair to bridge deck at P4	LS			9,741,607
						30,691,925
TOTAL FOR BILL NO. 4b (Carried forward to Summary of Bill of Quantities)						512,045,924

WEST BANK BYPASS CONSTRUCTION PROJECT (PACKAGE I)

Bill No. 4: STRUCTURES-4c WEST SIDE APPROACH VIADUCT

Bill No.	Item No.	Description	Unit	Quantity	Rate(Rs)	Amount (Rs)
		Structural Excavation and Backfill				
4c.1	107a	Structural excavation in common material	CM	6,096	179.38	1,093,486
4c.2	107e	Common backfill	CM	5,181	113.85	589,781
		Bituminous Tack Coat				
4c.3	303a	Bituminous tack coat	SM	2,134	18.16	38,757
		Asphaltic concrete wearing course-plant mix				
4c.4	305a1	Asphaltic concrete for wearing course (Class A) on carriageway	CM	131	8,601.30	1,126,771
4c.5	305a2	Asphaltic concrete for wearing course (Class A) on side walk	CM	23	8,601.30	195,000
4c.6	SP 313	Bridge deck waterproofing	SM	2,116	995.21	2,105,868
		Concrete				
4c.7	SP401a1	Concrete Class A0-1 in leveling concrete	CM	18	7,778.04	140,005
4c.8	SP401b1	Concrete Class A1-1(Abutment wall, pier column)	CM	1,241	7,778.04	9,648,662
4c.9	SP401b2	Concrete Class A1- 2 (Abutment and pier footing)	CM	934	7,800.43	7,281,705
4c.10	SP401e	Concrete Class D1 in PC box girder	CM	1,537	8,841.49	13,589,370
4c.11	SP401g	Lean concrete under abutments and piers	CM	50	7,305.11	365,256
		Falsework and Centering for Bridges				
4c.12	SP402a4	Supporting Type D (for PC box girder on west side approach viaduct)	LS			17,581,975
4c.13	SP402b4	Scaffolding Type C (for Piers 5, 6, 7 and abutment A2 on west side approach viaduct)	LS			1,559,107
		Carried Over				55,315,742

WEST BANK BYPASS CONSTRUCTION PROJECT (PACKAGE I)

Bill No.	Item No.	Description	Unit	Quantity	Rate(Rs)	Amount (Rs)
		Formwork				
4c.14	SP403a	Formwork Type A (for Piers 5, 6, 7, and abutment A2 on west side approach viaduct)	SM	2,006	1,701.46	3,413,304
4c.15	SP403b8	Formwork Type D1 (for external of PC box girder on west side approach viaduct)	SM	3,047	2,323.52	7,079,772
4c.16	SP403b9	Formwork Type D2 (for internal of PC box girder on west side approach viaduct)	SM	1,715	3,096.70	5,310,846
		Steel reinforcement				
	404b	Reinforcement as per AASHTO M31 Grade 60				
4c.17		(i) Reinforcement for substructure	Ton	316.9	85,859.13	27,212,363
4c.18		(ii) Reinforcement for superstructure	Ton	231.4	86,439.28	20,002,050
		Prestressed Concrete				
4c.19	SP405e1	Installation of longitudinal PC cable, 12S-15.2mm, including grouting	TON	26.7	211,123.87	5,637,007
4c.20	SP405e2	Stressing longitudinal PC cable, 12S-15.2mm, stressing from both end, including installation of live end anchorages	EACH	48	29,690.27	1,425,133
4c.21	SP405e3	Stressing longitudinal PC cable 12S-15.2mm, stressing from one end, including installation of live end anchorage	EACH	24	20,702.06	496,849
4c.22	SP405e4	Jointing longitudinal PC cable, 12S-15.2mm	EACH	24	43,732.95	1,049,591
4c.23	SP405e5	Installation of transverse PC cable, 12S-15.2mm, including grouting	TON	2.9	211,123.87	611,415
4c.24	SP405e6	Stressing transverse PC cable, 12S-15.2mm, including installation of live end and dead end anchorage	EACH	30	29,690.27	890,708
4c.25	SP405a7	Installation of transverse PC cable, 3S-15.2mm, including grouting	TON	15.8	245,102.25	3,872,616
4c.26	SP405e8	Stressing transverse PC cable, 3S-15.2mm, including installation of live end and dead end anchorage	EACH	349	6,968.48	2,431,999
		Carried Over				79,433,652

WEST BANK BYPASS CONSTRUCTION PROJECT (PACKAGE I)

Bill No.	Item No.	Description	Unit	Quantity	Rate(Rs)	Amount (Rs)
		Joint and bearing devices				
4c.27	SP406e4	Bridge bearing pads, 670×520×122	EACH	4	215,202.99	860,812
4c.28	SP406g2	Anchor bar (Dia. 90mm)	EACH	16	127,235.93	2,035,775
4c.29	SP406i	Drain pipe	M	198	1,852.45	366,785
4c.30	SP406j	Catch basin	EACH	12	3,655.99	43,872
4c.31	SP406k	Slab drain	EACH	34	9,249.59	314,486
		Piling				
4c.32	407k	Confirmatory Boring	M	50	2,054.27	102,714
		Bridge Railing				
4c.33	401b1	Structural Concrete for Class A1-1	CM	170	7,778.04	1,322,267
4c.34	404b	Reinforcement as per AASHTO M31 Grade 60	TON	30.9	85,859.13	2,653,047
4c.35	SP606c	Steel Railing	M	336	20,519.34	6,894,498
4c.36	SP403c	Formwork Type E for barrier, concrete wall	SM	1,378	2,196.42	3,026,667
		Pavement Marking				
4c.37	608h1	Pavement marking in reflective TP paint for lines of 15 cm width (White)	M	168	93.44	15,698
4c.38	608h2	Pavement marking in reflective TP paint for lines of 15 cm width (Yellow)	M	336	93.44	31,395
		Ancillary Works				
4c.39	SP614b	Support for water pipe on Bridge Type D	EACH	24	15,088.44	362,123
						18,030,138
TOTAL FOR BILL NO. 4C (Carried forward to Summary of Bill of Quantities)						147,107,197

WEST BANK BYPASS CONSTRUCTION PROJECT (PACKAGE I)

BILL No. 4d BOX CULVERT (Sta. 0+723)

Bill No.	Item No.	Description	Unit	Quantity	Rate (Rs)	Amount (Rs)
		Structural Excavation and Backfill				
4d.1	107a	Structural excavation in common material	CM	277	179.38	49,634
4d.2	107e	Common backfill	CM	65	113.85	7,400
4d.3	SP107f	Granular bedding	CM	7	1,233.34	8,633
		Concrete				
4d.4	SP401a1	Concrete Class A1-1	CM	50	7,778.04	385,013
4d.5	SP401g	Lean concrete	CM	4	7,305.11	29,220
		Steel Reinforcement				
4d.6	404b	Reinforcement as per AASHTO M31 Grade 60	TON	5.7	85,859.13	489,397
		Gabions				
4d.7	SP507c	Gabion	CM	4	5,918.63	23,675
		TOTAL FOR BILL NO. 4d (Carried forward to Summary of Bill of Quantities)				992,972

WEST BANK BYPASS CONSTRUCTION PROJECT

BILL No. 4e RETAINING WALLS

Bill No.	Item No.	Description	Unit	Quantity	Rate (Rs)	Amount (Rs)
		Structural Excavation and Backfill				
4e.1	107a	Structural excavation in common material	CM	4,323	179.38	775,449
4e.2	107e	Common backfill	CM	524	113.85	59,655
4e.3	107d	Granular backfill	CM	1,308	718.25	939,476
		Concrete				
4e.4	SP401b	Concrete Class A1-1	CM	2,196	7,778.04	17,080,581
		Randum and dressed uncoursed stone masonry				
4e.5	411b	Stone masonry randum with mortar	CM	221	2,514.75	555,761
TOTAL FOR BILL NO. 4e (Carried forward to Summary of Bill of Quantities)						19,410,923

WEST BANK BYPASS CONSTRUCTION PROJECT (PACKAGE I)

Bill No. 5 DRAINAGE AND EROSION WORKS

Bill No.	Item No.	Description	Unit	Quantity	Rate (Rs)	Amount (Rs)
		Reinforced Concrete Pipe Culverts				
5.1	501o	AASHTO M170, Class IV Reinforced Concrete pipe Dimameter 910mm	M	67	7,037.02	471,481
5.2	502a	Granular material in bed to concrete pipe culverts	CM	30	777.61	23,328
		Drop inlets and Catch Basins				
5.3	506b5	Catch basin, (1510x1200)	EACH	6	79,176.42	475,059
		Dismantling Structures and Obstructions				
5.4	510	Dismantling of existing structues	CM	985	2,601.12	2,562,101
		Ditch Lining and Wash Checks				
5.5	512a1	Concrete ditch lining (Type I-1)	M	110	620.51	68,256
5.6	512a2	Concrete ditch lining (Type I-2)	M	112	827.34	92,662
5.7	512a4	Concrete ditch lining (Type I-4)	M	100	1,221.44	122,144
5.8	512a5	Concrete ditch lining (Type II-1A)	M	485	1,885.55	914,494
5.9	512a6	Concrete ditch lining (Type II-1B)	M	400	3,160.86	1,264,342
5.10	512a8	Concrete ditch lining (Type II-2B)	M	256	3,084.58	789,652
5.11	512a10	Concrete ditch lining (Type II-3B)	M	157	4,200.26	659,440
5.12	512a12	Concrete ditch lining (Type II-4B)	M	300	5,089.61	1,526,883
5.13	512a13	Concrete ditch lining (Type III-A)	M	20	6,883.29	137,666
		Concrete Crib Work				
5.14	SP513a	Concrete crib work Type A	SM	847	3,735.03	3,163,574
TOTAL FOR BILL NO. 5 (Carried forward to Summary of Bill of Quantities)						12,271,082

WEST BANK BYPASS CONSTRUCTION PROJECT (PACKAGE I)

Bill No. 6 ANCILLARY WORKS

Bill No.	Item No.	Description	Unit	Quantity	Rate (Rs)	Amount (Rs)
		Concrete Kerbs, Gutters and Channels				
6.1	601d1	Pre-cast concrete Kerb (Type A)	M	1,623	1,237.96	2,009,211
6.2	601d2	Pre-cast concrete Kerb, (Type A)	M	1,441	791.42	1,140,437
6.3	602d	Precast concrete interlocking block sidewalks	SM	2,537	1,841.97	4,673,088
		Metal Beam Guard Rail				
6.4	604a	Metal Guard Rail	M	332	2,339.98	776,873
6.5	604b	Guard rail end pieces	EACH	12	2,132.42	25,589
6.6	604d1	Steel Post Guardrail Type A	EACH	142	6,945.72	986,292
		Pavement Marking				
6.7	607a	Traffic road sign category 1, size	EACH	11	8,872.19	97,594
6.8	607b	Traffic road sign category 2, size	EACH	6	11,742.65	70,456
6.9	607d	Traffic road sign category 3 (b)	EACH	7	26,866.11	188,063
		Pavement Marking				
6.10	608h1	Pavement Marking in reflective TP Paint for lines of 15cm width (White)	M	945	93.44	88,299
6.11	608h2	Pavement Marking in reflective TP Paint for lines of 15cm width (Yellow)	M	865	93.44	80,824
6.12	608k	Pavement marking in reflective TP paint for various signs	SM	706	502.80	354,977
6.13	608j	Pavement marking in reflective TP paint for 4M arrow	EACH	43	1,081.94	46,523
		Precast Concrete Posts and Markers				
6.14	610c	Kilometer post	EACH	1	4,130.99	4,131
		Furnishing and Planting Trees, Shrubs and Ground Cover				
		Furnishing and planting of trees including maintenance period of 1 year				
6.15	612b	(i) Hibiscus	EACH	60	167.60	10,056
		Carried over				10,552,411

WEST BANK BYPASS CONSTRUCTION PROJECT (PACKAGE I)

Bill No.	Item No.	Description	Unit	Quantity	Rate (Rs)	Amount (Rs)
		Sprigging and Sodding				
6.16	613a	Sprigging	SM	6,000	402.24	2,413,440
6.17	613b	Sodding	SM	6,000	282.91	1,697,453
6.18	613c	Top soil	SM	4,403	95.94	422,406
						4,533,299
TOTAL FOR BILL NO. 6 (Carried forward to Summary of Bill of Quantities)						15,085,710

WEST BANK BYPASS CONSTRUCTION PROJECT (PACKAGE I)

Bill No. 7: MISCELLANEOUS

Bill No.	Item No.	Description	Unit	Quantity	Rate (Rs)	Amount (Rs)
		Survey and Instruments				
7.1	701a	Provide survey and allied instruments	LS			1,117,423
7.2	701b	Maintain survey instruments and provide teams for survey	Month	32	584,447.64	18,702,324
		Engineer's Site Office and Residence				
7.3	SP 702a1	Engineer's office (renting)	Month	33	194,684.16	6,424,577
7.4	SP 702a2	Enginer's staff residence (renting)	Month	33	146,013.12	4,818,433
7.5	SP 702a3	Employer's office (renting)	Month	33	153,387.52	5,061,788
7.6	SP 702a4	Employer's staff residence (renting)	Month	33	238,662.40	7,875,859
7.7	SP 702a5	Engineer's mobile office	Month	33	39,545.39	1,304,998
7.8	SP702b1	Furnish and equip facilities for engineer's site office	LS			859,922
7.9	SP702b2	Furnish and equip facilities for employer's site office	LS			558,309
7.10	SP 702c1	Maintain Engineer's site office	Month	33	88,346.97	2,915,450
7.11	SP 702c2	Mainteain Engineer's housing	Month	33	88,346.97	2,915,450
7.12	SP 702c3	Maintain Employer's site office	Month	33	88,346.97	2,915,450
7.13	SP 702c4	Maintain Employer's housing	Month	33	88,346.97	2,915,450
		Laboratory				
7.14	SP 703a	Provide material testing laboratory	LS			3,217,920
7.15	SP 703b	Equip and furnish project laboratory	LS			1,308,673
7.16	SP 703c	Maintenance laboratory	Month	32	95,842.57	3,066,962
		Temporary Road Works for Traffic Diversion				
7.17	705a	Construction of temporary road	LS			7,100,289
7.18	705b	Maintenance of temporary road	LS			2,710,017
		Carried Over				75,789,296

WEST BANK BYPASS CONSTRUCTION PROJECT (PACKAGE I)

Bill No.	Item No.	Description	Unit	Quantity	Rate (Rs)	Amount (Rs)
		Control and Protection of Taffic				
7.19	706	Control and protection of taffic	Month	32	125,759.96	4,024,319
		Removal/Relocation of Utilities (PROVISONAL)				
7.2	SP707a	Removal of electric/telephone line and existing services as specified	LS			5,000,000
7.21	SP707b	Allow for contractor's expenses, overhead and profit in connection with SP707a	LS	% of Item SP707a1		250,000
		Engineer's and Employer's Vehicles				
7.22	SP 708a1	Provision of Engineer's vehicle	EACH	4	3,196,467.20	12,785,869
7.30	SP 708a2	Provision of Employer's vehicle	EACH	1	5,395,379.20	5,395,379
7.24	SP 708b1	Maintenance of Engineer's vehicle	Vehicle Month	132	99,643.36	13,152,924
7.25	SP 708b2	Maintenance of Employer's vehicle	vehicle Month	33	90,460.22	2,985,187
		Land, Compensation and Loyalties (PROVISIONAL)				
7.26	SP709a	Compensation for land, corops and buildings	LS			2,500,000
7.27	SP709b	Allow for contractor's expenses, overhead and profit in connection with SP709a	LS	% of Item SP709a1		125,000
		Contractor's Establishment on Site				
7.28	SP710a	Ground preparation of camp yard	LS			10,777,633
7.29	SP710b	Mobilization and demobilization of contractor's equipment	LS			25,496,648
		Environmental Control and Monitoring				
7.30	SP711	Envionmental monitoring	Month	33	207,618.96	6,851,426
		Sign boards				
7.31	SP712	Erection of sign boards	EACH	2	189,360.27	378,721
						89,723,105
TOTAL FOR BILL NO. 7				(Carried forward to Summary of Bill of Quantities)		158,666,601

WEST BANK BYPASS CONSTRUTION PROJECT (PROJECT I)

Bill No. 8: ELECTRICT WORKS

Bill No.	Item No.	Description	Unit	Quantity	Rate (Rs)	Amount (Rs)
		Highway Lighting				
	SP801a	Lighting pole				
8.1		(i) 20 meter high tubular galvanized steel pole with base plate, RCC foundation, J-bolts, junction box and earthing etc	nr	1	627,548.57	627,549
8.2		(ii) 10 meter high single arm tubular galvanized steel pole with base plate, RCC foundation, J-bolts, junction box and earthing etc on Bridge.	nr	17	73,093.71	1,242,593
8.3		(iii) 10 meter high single arm tubular galvanized steel pole with base plate, RCC foundation, J-bolts, junction box and earthing etc on ground.	nr	2	74,812.62	149,625
	SP801b	Lighting luminarie				
8.4		(i) Road lighting luminarie complete with 150 watt H.P. sodium vabour lamp, CW1 ballast, p.f. correction capacitor etc. European origin	nr	19	82,043.55	1,558,827
8.5		(ii) Road lighting luminarie complete with 1000 watt H.P. Sodium vapour Flash Light lamp, CW1 ballast, p.f. correction capacitor etc. with adjustable complete assembly and holding frame. European origin.	nr	6	223,967.23	1,343,803
	SP801c	Conduit under road for laying cables				
8.6		(i) 50mm dia Class B, PVC pipe (Beta or Shavyl) to be laid as per standard practice for laying of cables	m	66	799.29	52,753
7.7		(ii) 50mm dia Class B, G.I. pipe to be laid as per standard practice for laying of cables on bridge & ground.	m	88	741.30	65,235
8.8		(iii) 150mm dia Class B, RCC pipe Embedded in Class "B" Concrete, Complete with Excavation & Jointing etc.	m	170	1,589.52	270,218
8.9		(iv) 100mm dia Class B, RCC pipe Embedded in Class "B" Concrete, Complete with Excavation & Jointing etc.	m	214.5	1,370.97	294,073
	SP801d	PVC/PVC insulated, 600/1000V grade multi-core copper conductor with conductivity not less than 99.9% laid in pipe				
8.10		(i) 4-core 25mm^2	m	1080	1,836.63	1,983,558
8.11		(ii) 4-core 16mm^2	m	409	997.22	407,863
8.12		(iii) 4-core 10mm^2	m	364	640.02	232,966
8.13		(iv) 4-core 2.5mm^2	m	498	220.32	109,719
		Carried Over				8,338,783

WEST BANK BYPASS CONSTRUTION PROJECT (PROJECT I)

Bill No.	Item No.	Description	Unit	Quantity	Rate (Rs)	Amount (Rs)
8.14	SP801e	3-core 2.5mm^2 PVC/PVC insulated 600/1000V grade copper multi-core cable from junction box to the light fitting through the hollow pole	m	510	211.20	107,713
8.15	SP801f	Road lighting control panel, Imported	nr	1	93,111.86	93,112
	SP801g	Copper wires as earth continuity conductor				
8.16		(iii) Earth System comprising of 16mm dia.copper coated M.S. rods driven in ground for road lighting & Traffic signals control panel & poles with resistance of less than 2 ohms.	nr	3	56,229.13	168,687
	SP801h	PVC insulated,Earth Conecting Conductor				0
8.17		(i) 1-core 16mm^2	m	1080	269.77	291,350
8.18		(ii)1 -core 10mm^2	m	760	191.79	145,759
8.19		(iii)1 -core 4mm^2	m	249	105.49	26,268
8.20	SP801i	Energy Meter 5 kilo watts for Intersection 1	nr	1	36,603.84	36,604
8.21	SP801j	25kVA, 11/0.415 kV pole mounted transformer complete with pole, earthing, 3-phase energy meter and all accessories as per AJK Electricity Department source.	LS	1	566,727.53	566,728
		Traffic Signal				
	SP802a	Traffic light pole				
8.22		(i) Traffic lights with 7 m long arm with imported signal light heads	nr	4	535,745.00	2,142,980
8.23		(ii) Traffic lights pole 3.4m height with imported signal light	nr	4	247,502.90	990,012
8.24	SP802b	Traffic signal light control panel Imported (16 Input & Outputs) S-7 Siemens or Equivalent European Origin with Expansion Module, Power Supply & Accessories	nr	1	297,844.64	297,845
8.25	SP802c	Main Distrbution Box	nr	1	97,690.69	97,691
8.26	SP802d	Main Hole/Hand Hole variable size as per drawing or as per Instruction of Engineer	nr	6	23,249.47	139,497
8.27	SP802e	**Field testing and review**	LS	1	241,344.00	241,344
						5,345,589
TOTAL FOR BILL NO. 8 (Carried forward to Summary of Bill of Quantities)						13,684,372

WEST BANK BYPASS CONSTRUCTION PROJECT (PACKAGE I)

Bill No. 9 DAY WORKS (PROVISIONAL)

Bill No.	Item No.	Description	Unit	Quantity	Rate(Rs)	Amount (Rs)
9.1	SP 800a	Daywork (Labour)	L.S	1	913,490.42	913,490
9.2	SP 800b	Daywork (Material)	L.S	1	9,971,230.15	9,971,230
9.3	SP 800b	Daywork (Equipment)	L.S	1	16,523,666.60	16,523,667
TOTAL FOR BILL NO. 9 (Carried forward to Summary of Bill of Quantities)						27,408,387

(2) PACKAGE II

SUMMARY OF PRICED BILL OF QUANTITIES

BILL NO.	DESCRIPTION OF WORK	AMOUNT (Rs)
1	EARTHWORK	29,210,896
2	SUBBASE AND BASE	29,190,488
3	SURFACE COURSE AND PAVEMENT	19,414,488
4	STRUCTURES	
4a	BRIDGE (STA.1+748)	16,027,735
4b	BRIDGE (STA.3+515)	15,178,525
4c	BRIDGE (STA.4+745)	35,390,447
4d	BOX CULVERTS	20,106,366
4e	RETAINING WALLS	79,376,423
5	DRAINAGE AND EROSION WORKS	32,526,758
6	ANCILLARY WORKS	19,501,924
7	MISCELLANEOUS	26,054,148
8	ELECTRICAL WORKS	4,856,060
9	PROVISIONAL (DAYWORK)	14,833,895
	SUB-TOTAL OF BILLS	**341,668,153**
	INCOME TAX	**20,500,089**
	CONSTRUCTION COST	**362,168,242**

WEST BANK BYPASS CONSTRUCTION PROJECT (PACKAGE II)

BILL No. 1 EARTHWORK

Bill No.	Item No.	Description	Unit	Quantity	Rate (Rs)	Amount (Rs)
		Clearing and grubbing				
1.1	101	Clearing and grubbing	SM	17,176	12.56	215,655
		Removal of tress				
1.2	102a	Removal of tress, 100-300mm girth	Each	180	206.03	37,086
1.3	102b	Removal of trees, 301-600mm girth	Each	50	532.61	26,630
1.4	102c	Removal of trees, 601mm or over girth	Each	20	2,130.48	42,610
		Excavation of Unsuitable or Surplus Material				
		Excavate unsuitable rock material in				
1.5	106b	(iii) Soft rock	CM	2,767	305.17	844,400
		Formation of Embankment				
1.6	108a	Formation of embankment from roadway excavation in common material	CM	42,327	212.12	8,978,440
1.7	108b	Formation of embankment from roadway excavation in soft rock material	CM	6,086	430.39	2,619,341
1.8	108c	Formation of embankment from borrow excavation in common material	CM	57,716	221.28	12,771,245
1.9	SP108f	Overhaul	KM-CM	86,574	14.95	1,293,988
		Subgrade Preparation				
	109b	Subgrade preparation in existing road				
1.10		(ii) With fill less than 30cm	SM	6,743	55.90	376,965
		Improved Subgrade				
1.11	110	Improved Subgrade	CM	8,856	226.35	2,004,536
TOTAL FOR BILL NO. 1 (Carried forward to Summary of Bill of Quantities)						29,210,896

WEST BANK BYPASS CONSTRUCTION PROJECT (PACKAGE II)

Bill No. 2: SUBBASE AND BASE

Bill No.	Item No.	Description	Unit	Quantity	Rate (Rs)	Amount (Rs)
		Granular subbase				
2.1	201	Granular subbase for carriageway	CM	2,977	899.94	2,679,112
		Aggregate Base Course				
2.2	202	Aggregate base for carriageway	CM	4,515	1,227.38	5,541,627
		Scarification of Existing Road/Breaking of Road Pavement				
2.3	209	Scarification of existing road pavement	SM	8,678	25.50	221,248
		Asphalt Concrete Binder Course				
2.4	214	Asphalt concrete binder course	CM	2,862	7,249.65	20,748,501
TOTAL FOR BILL NO. 2 (Carried forward to Summary of Bill of Quantities)						29,190,488

WEST BANK BYPASS CONSTRUCTION PROJECT (PACKAGE II)

Bill No. 3: SURFACE COURSE AND PAVEMENT

Bill No.	Item No.	Description	Unit	Quantity	Rate (Rs)	Amount (Rs)
		Bituminous Prime Coat				
3.1	302	Bitumnous prime coat	SM	42,605	40.42	1,722,296
		Bituminous tack coat				
3.2	303	Bituminous tack coat	SM	40,890	16.93	692,298
		Asphalt Concrete Wearing Course-Plant Mix				
3.3	305a1	Asphaltic concrete for wearing course on carriageway (Class A)	CM	2,046	8,018.82	16,406,501
3.4	305a2	Asphaltic concrete for wearing course on sidewalk (Class A)	CM	74	8,018.82	593,393
TOTAL FOR BILL NO. 3 (Carried forward to Summary of Bill of Quantities)						19,414,488

WEST BANK BYPASS CONSTRUCTION PROJECT (PACKAGE II)

BILL No. 4a SMALL SPAN BRIDGE (Sta. 1+748)

Bill No.	Item No.	Description	Unit	Quantity	Rate (Rs)	Amount (Rs)
		Structural Excavation and Backfill				
4a.1	107a	Structural excavation in common material	CM	1,562	167.23	261,213
4a.2	107e	Common backfill	CM	1,801	106.14	191,162
		Bituminous Tack Coat				
4a.3	303a	Bituminous tack coat on bridge deck waterproofing	SM	335	16.93	5,672
4a.4	305a	Asphaltic concrete for wearing course (Class A) on carriageway	CM	15	8,018.82	120,282
4a.5	305a1	Asphaltic concrete for wearing course (Class A) on side walk	CM	2	8,018.82	16,038
4a.6	SP313	Bridge deck waterproofing	SM	290	927.82	269,066
		Concrete				
4a.7	SP401a1S	Concrete Class A0-1S (leveling concrete)	CM	11	6,326.28	69,589
4a.8	SP401b1S	Concrete Class A1-1S (substructure, approach slab)	CM	462	6,940.44	3,203,014
4a.9	SP401b2S	Concrete Class A1-2S (Footing)	CM	248	6,019.19	1,493,360
4a.10	SP401c1S	Concrete Class A2-1S (deck slab, hunch)	CM	80	7,719.54	617,563
4a.11	SP401eS	Concrete Class D1 (end cross beam, intermediate cross beam)	CM	14	7,983.52	111,769
4a.12	SP401gS	Lean concrete(S)	CM	19	3,562.99	67,696.83
		Steel Reinforcement				
	404b	Reinforcement as per AASHTO M31 Grade 60				
4a.13		(i) Reinforcement for substructure	Ton	73.3	69,482.50	5,091,469
4a.14		(ii) Reinforcement for deck slab and diaphragm	Ton	19.3	69,482.50	1,341,012
		Carried forward				10,353,866

WEST BANK BYPASS CONSTRUCTION PROJECT (PACKAGE II)

Bill No.	Item No.	Description	Unit	Quantity	Rate (Rs)	Amount (Rs)
	SP405	**Prestressed Concrete Structures**				
4a.15	SP405a	Precast PC member (PC girder L=29m)	EACH	4	571,134.84	2,284,539
4a.16	SP405b	Launching of girder	EACH	4	250,000.00	1,000,000
		Joint and Bearing Devices for Concrete Structures				
4a.17	SP406e5	Elastomeric bearing pads (470×420×83mm)	cubic cm	65,537	2.17	142,338
4a.18	SP406e6	Elastomeric bearing pads (470×470×103mm)	cubic ccm	91,011	2.17	197,664
4a.19	SP406g4	Anchor bar (Ø55)	Each	24	81,533.42	1,956,802
4a.20	SP406h5	Expansion joint, NB50, 50mm	M	19	15,575.00	295,925
4a.21	SP406i	Drain pipe	M	5	1,727.00	8,635
4a.22	SP406j	Catch basin	EACH	1	3,408.40	3,408
		piling				
4a.23	407k	Confirmatory boring	M	25	1,915.15	47,879
		Dismantling Structures and Obstructions				
4a.24	510	Dismantling of existing bridge	CM	80	2,424.97	193,997
		Bridge Railing				
4a.25	SP401b1	Concrete Class A1-1S	CM	23	6,326.28	145,504
4a.26	404b	Reinforcement as per AASHTO M31 Grade 60	TON	4.1	69,482.50	284,878
4a.27	606c	Steel railing	M	47	19,129.75	899,098
		Pavement Marking				
4a.28	608h1	Pavement marking in reflective TP paint for lines of 15cm width (White)	M	30	87.11	2,613
4a.29	608h2	Pavement marking in reflective TP paint for lines of 15cm width (Yellow)	M	60	87.11	5,227
						5,673,870
TOTAL FOR BILL NO. 4a (Carried forward to Summary of Bill of Quantities)						16,027,735

WEST BANK BYPASS CONSTRUCTION PROJECT (PACKAGE II)

BILL No. 4b SMALL SPAN BRIDGE (Sta. 3+515)

Bill No.	Item No.	Description	Unit	Quantity	Rate (Rs)	Amount (Rs)
		Structural Excavation and Backfill				
4b.1	107a	Structural excavation in common material	CM	1,478	167.23	247,166
4b.2	107e	Common backfill	CM	1,518	106.14	161,094
		Bituminous Tack Coat				
4b.3	303a	Bituminous tack coat on bridge deck waterproofing	SM	335	16.93	5,672
4b.4	305a	Asphaltic concrete for wearing course (Class A) on carriageway	CM	15	8,018.82	120,282
4b.5	305a1	Asphaltic concrete for wearing course (Class A) on side walk	CM	2	8,018.82	16,038
4b.6	SP313	Bridge deck waterproofing	SM	290	927.82	269,066
		Concrete				
4b.7	SP401a1S	Concrete Class A0-1S (leveling concrete)	CM	11	6,326.28	69,589
4b.8	SP401b1S	Concrete Class A1-1S (substructure, approach slab)	CM	385	6,940.44	2,674,846
4b.9	SP401b2S	Concrete Class A1-2S (Footing)	CM	218	6,019.19	1,312,182
4b.10	SP401c1S	Concrete Class A2-1S (deck slab, hunch)	CM	85	7,719.54	656,161
4b.11	SP401eS	Concrete Class D1 (end cross beam, intermediate cross beam)	CM	15	7,983.52	119,753
4b.12	SP401gS	Lean concrete(S)	CM	18	3,562.99	64,133.84
		Steel Reinforcement				
	404b	Reinforcement as per AASHTO M31 Grade 60				
4b.13		(i) Reinforcement for substructure	Ton	39.0	69,482.50	2,707,872
4b.14		(ii) Reinforcement for deck slab and diaphragm	Ton	19.4	69,482.50	1,347,960
		Carried forward				8,754,882

WEST BANK BYPASS CONSTRUCTION PROJECT (PACKAGE II)

Bill No.	Item No.	Description	Unit	Quantity	Rate (Rs)	Amount (Rs)
	SP405	**Prestressed Concrete Structures**				
4b.15	SP405a	Precast PC member (PC girder L=29m)	EACH	4	571,134.84	2,284,539
4b.16	SP405b	Launching of girder	EACH	4	250,000.00	1,000,000
		Joint and Bearing Devices for Concrete Structures				
4b.17	SP406e5	Elastomeric bearing pads (470×420×83mm)	cubic cm	65,537	2.17	142,338
4b.18	SP406e6	Elastomeric bearing pads (470×470×103mm)	cubic cm	91,011	2.17	197,664
4ab.19	SP406g4	Anchor bar (Ø55)	Each	24	81,533.42	1,956,802
4b.20	SP406h5	Expansion joint, NB50, 50mm	M	19	15,575.00	295,925
4b.21	SP406i	Drain pipe	M	5	1,727.00	8,635
4b.22	SP406j	Catch basin	EACH	1	3,408.40	3,408
		piling				
4b.23	407k	Confirmatory boring	M	25	1,915.15	47,879
		Bridge Railing				
4b.24	SP401b1S	Concrete Class A1-1S	CM	23	6,326.28	145,504
4b.25	404b	Reinforcement as per AASHTO M31 Grade 60	TON	4.1	69,482.50	284,878
4b.26	606c	Steel railing	M	49	19,129.75	937,358
		Pavement Marking				
4b.27	608h1	(i) Pavement marking in reflective TP paint for lines of 15cm width (White)	M	30	87.11	2,613
4b.28	608h2	(ii) Pavement marking in reflective TP paint for lines of 15cm width (Yellow)	M	60	87.11	5,227
						6,423,643
		TOTAL FOR BILL NO. 4b (Carried forward to Summary of Bill of Quantities)				15,178,525

WEST BANK BYPASS CONSTRUCTION PROJECT (PACKAGE II)

BILL No. 4c SMALL SPAN BRIDGE (Sta. 4+745)

Bill No.	Item No.	Description	Unit	Quantity	Rate (Rs)	Amount (Rs)
		Structural Excavation and Backfill				
4c.1	107a	Structural excavation in common material	CM	2,461	167.23	411,553
4c.2	107e	Common backfill	CM	1,964	106.14	208,452
		Bituminous Tack Coat				
4c.3	303a	Bituminous tack coat on bridge deck waterproofing	SM	670	16.93	11,344
4c.4	305a	Asphaltic concrete for wearing course (Class A) on carriageway	CM	29	8,018.82	232,546
4c.5	305a1	Asphaltic concrete for wearing course (Class A) on side walk	CM	3	8,018.82	24,056
4c.6	SP313	Bridge deck waterproofing	SM	581	927.82	539,061
		Concrete				
4c.7	SP401a1S	Concrete Class A0-1S (leveling concrete)	CM	15	6,326.28	94,894
4c.8	SP401b1S	Concrete Class A1-1S (substructure, approach slab)	CM	471	6,940.44	3,268,948
4c.9	SP401b2S	Concrete Class A1-2S (Footing)	CM	321	6,019.19	1,932,158
4c.10	SP401c1S	Concrete Class A2-1S (deck slab, hunch)	CM	160	7,719.54	1,235,127
4c.11	SP401eS	Concrete Class D1 (end cross beam, intermediate cross beam)	CM	46	7,983.52	367,242
4c.12	SP401gS	Lean concrete (S)	CM	25	3,562.99	89,074.78
		Steel Reinforcement				
	404b	Reinforcement as per AASHTO M31 Grade 60				
4c.13		(i) Reinforcement for substructure	Ton	44.2	69,482.50	3,073,767
4c.14		(ii) Reinforcement for deck slab and diaphragm	Ton	36.4	69,482.50	2,529,163
		Carried forward				14,017,384

WEST BANK BYPASS CONSTRUCTION PROJECT (PACKAGE II)

Bill No.	Item No.	Description	Unit	Quantity	Rate (Rs)	Amount (Rs)
	SP405	**Prestressed Concrete Structures**				
4c.15	SP405a	Precast PC member (PC girder L=29m)	EACH	8	571,134.84	4,569,079
4c.16	SP405b	Launching of girder	EACH	8	250,000.00	2,000,000
		Joint and Bearing Devices for Concrete Structures				
4c.17	SP406e5	Elastomeric bearing pads (470×420×83mm)	cubic cm	131,074	2.17	284,675
4c.18	SP406e6	Elastomeric bearing pads (470×470×103mm)	cubic cm	182,022	2.17	395,328
4c.19	SP406g4	Anchor bar (Ø55)	Each	48	81,533.42	3,913,604
4c.20	SP406h5	Expansion joint, NB50, 50mm	M	29	15,575.00	451,675
4c.21	SP406i	Drain pipe	M	4	1,727.00	6,908
4c.22	SP406j	Catch basin	EACH	2	3,408.40	6,817
		piling				
4c.23	407d	Cast-in-place concrete pile, 1200mm dia. in gravel strata including concrete	M	180	15,710.18	2,827,832
4c24	404b	Reinforcement as per AASHTO M31 Grade 60 for cast-in-place concrete pile of 1.2m	TON	31.8	69,482.50	2,208,988
4c.25	407k	Confirmatory boring	M	50	1,915.15	95,758
		Gabion				
4c.26	507	Rock fill in gabions including steel wire mesh	CM	194	5,517.81	1,070,456
4c.27	SP507a	Geotextile filter behind gabion s	SM	290	146.78	42,567
		Dismantling Structures and Obstructions				
4c.28	510	Dismantling of existing bridge	CM	80	2,424.97	193,997
		Stone pitching				
4c.29	511b2	Grouted stone pitcihing	SM	969	1,085.24	1,051,593
		Bridge Railing				
		Carried forward				19,119,276

WEST BANK BYPASS CONSTRUCTION PROJECT (PACKAGE II)

Bill No.	Item No.	Description	Unit	Quantity	Rate (Rs)	Amount (Rs)
4c.30	SP401b1S	Concrete Class A1-1S	CM	46	6,326.28	291,009
4c.31	404b	Reinforcement as per AASHTO M31 Grade 60	TON	8.2	69,482.50	569,756
4c.32	606c	Steel railing	M	72	19,129.75	1,377,342
		Pavement Marking				
4c.33	608h1	Pavement marking in reflective TP paint for lines of 15cm width (White)	M	60	87.11	5,227
4c.34	608h2	Pavement marking in reflective TP paint for lines of 15cm width (Yellow)	M	120	87.11	10,453
						2,253,787
		TOTAL FOR BILL NO. 4c (Carried forward to Summary of Bill of Quantities)				35,390,447

WEST BANK BYPASS CONSTRUCTION PROJECT (PACKAGE II)

BILL No. 4d BOX CULVERTS

Bill No.	Item No.	Description	Unit	Quantity	Rate (Rs)	Amount (Rs)
		Structural Excavation and Backfill				
4d.1	107a	Structural excavation in common material	CM	1,776	167.23	297,000
4d.2	107e	Common backfill	CM	525	106.14	55,722
4d.3	SP107	Granular bedding	CM	161	1,149.82	185,120
		Concrete				
4d.4	SP401a1S	Concrete Class A0-1S	CM	18	6,326.28	113,873
4d.5	SP401b1S	Concrete Class A1-1S	CM	1,076	6,940.44	7,467,915
4d.6	SP401gS	Lean concrete (S)	CM	70	3,562.99	249,409
		Steel Reinforcement				
4d.7	404b	Reinforcement as per AASHTO M31 Grade 60	TON	127.1	69,482.50	8,831,225
		Joint & Bearing Devices				
4d.8	406a	Premoulded joint filler 12mm thick with bitumastic joint seal	SM	53	467.98	24,803
4d.9	406d	Water stop 6" size	M	135	614.58	82,968
4d.10	SP406h	75mm dia. PVC pipe for weep hole in wall	M	9	1,366.42	12,298
		Random & dressed uncoursed stone masonry				
4d.11	411b	Stone masonry random with mortar	SM	26	2,344.45	60,956
4d.12	SP107f	Gravel bedding	CM	169	1,149.82	194,319
4d.13	509	Gabions	CM	300	5,517.81	1,655,344
		Dismantling of Structures				
4d.14	510	Dismantling of Structures & obstructions	CM	361	2,424.97	875,414
		TOTAL FOR BILL NO. 4d (Carried forward to Summary of Bill of Quantities)				20,106,366

WEST BANK BYPASS CONSTRUCTION PROJECT (PACKAGE II)

BILL No. 4d BOX CULVERTS

Bill No.	Item No.	Description	Unit	Quantity	Rate (Rs)	Amount (Rs)
		Structural Excavation and Backfill				
4d.1	107a	Structural excavation in common material	CM	1,776	167.23	297,000
4d.2	107e	Common backfill	CM	525	106.14	55,722
4d.3	SP107	Granular bedding	CM	161	1,149.82	185,120
		Concrete				
4d.4	SP401a1S	Concrete Class A0-1S	CM	18	6,326.28	113,873
4d.5	SP401b1S	Concrete Class A1-1S	CM	1,076	6,940.44	7,467,915
4d.6	SP401gS	Lean concrete (S)	CM	70	3,562.99	249,409
		Steel Reinforcement				
4d.7	404b	Reinforcement as per AASHTO M31 Grade 60	TON	127.1	69,482.50	8,831,225
		Joint & Bearing Devices				
4d.8	406a	Premoulded joint filler 12mm thick with bitumastic joint seal	SM	53	467.98	24,803
4d.9	406d	Water stop 6" size	M	135	614.58	82,968
4d.10	SP406h	75mm dia. PVC pipe for weep hole in wall	M	9	1,366.42	12,298
		Random & dressed uncoursed stone masonry				
4d.11	411b	Stone masonry random with mortar	SM	26	2,344.45	60,956
4d.12	SP107f	Gravel bedding	CM	169	1,149.82	194,319
4d.13	509	Gabions	CM	300	5,517.81	1,655,344
		Dismantling of Structures				
4d.14	510	Dismantling of Structures & obstructions	CM	361	2,424.97	875,414
		TOTAL FOR BILL NO. 4d (Carried forward to Summary of Bill of Quantities)				20,106,366

WEST BANK BYPASS CONSTRUCTION PROJECT (PACKAGE II)

BILL No. 4d BOX CULVERTS

Bill No.	Item No.	Description	Unit	Quantity	Rate (Rs)	Amount (Rs)
		Structural Excavation and Backfill				
4d.1	107a	Structural excavation in common material	CM	1,776	167.23	297,000
4d.2	107e	Common backfill	CM	525	106.14	55,722
4d.3	SP107	Granular bedding	CM	161	1,149.82	185,120
		Concrete				
4d.4	SP401a1S	Concrete Class A0-1S	CM	18	6,326.28	113,873
4d.5	SP401b1S	Concrete Class A1-1S	CM	1,076	6,940.44	7,467,915
4d.6	SP401gS	Lean concrete (S)	CM	70	3,562.99	249,409
		Steel Reinforcement				
4d.7	404b	Reinforcement as per AASHTO M31 Grade 60	TON	127.1	69,482.50	8,831,225
		Joint & Bearing Devices				
4d.8	406a	Premoulded joint filler 12mm thick with bitumastic joint seal	SM	53	467.98	24,803
4d.9	406d	Water stop 6" size	M	135	614.58	82,968
4d.10	SP406h	75mm dia. PVC pipe for weep hole in wall	M	9	1,366.42	12,298
		Random & dressed uncoursed stone masonry				
4d.11	411b	Stone masonry random with mortar	SM	26	2,344.45	60,956
4d.12	SP107f	Gravel bedding	CM	169	1,149.82	194,319
4d.13	509	Gabions	CM	300	5,517.81	1,655,344
		Dismantling of Structures				
4d.14	510	Dismantling of Structures & obstructions	CM	361	2,424.97	875,414
		TOTAL FOR BILL NO. 4d (Carried forward to Summary of Bill of Quantities)				20,106,366

WEST BANK BYPASS CONSTRUCTION PROJECTM(PACKAGE II)

BILL No. 4e RETAINING WALLS

Bill No.	Item No.	Description	Unit	Quantity	Rate (Rs)	Amount (Rs)
		Structural Excavation and Backfill				
4e.1	107a	Structural excavation in common material	CM	17,752	167.23	2,968,667
4e.2	107e	Common backfill	CM	1,145	106.14	121,526
4e.3	SP107f	Granular bedding	CM	3,660	669.61	2,450,784
		Concrete				
4e.4	SP401b	Concrete Class A1-1S	CM	4,832	6,940.44	33,536,211
4e.5	SP401f	Lean concrete (S)	CM	59	3,562.99	210,216
		Steel Reinforcement				
4e.6	404b	Reinforcement as per AASHTO M31 Grade 60	TON	81.7	69,482.50	5,676,720
		Randum and dressed uncoursed stone masonry				
4e.7	411b	Stone masonry randum with mortar	CM	8,169	2,344.45	19,151,837
		Gabions				
4e.8	SP507c	Gabions	CM	930	5,517.81	5,131,566
4e.9	SP507d	Geotextile filter	SM	1,395	146.78	204,760
		Riprap and Reinforced Concrete Slope Protection				
4e.10	509d	Grouted riprap, Class A	CM	3,357	2,956.25	9,924,137
TOTAL FOR BILL NO. 4e (Carried forward to Summary of Bill of Quantities)						73,160,523

WEST BANK BYPASS CONSTRUCTION PROJECT (PACKAGE II)

Bill No. 5 DRAINAGE AND EROSION WORKS

Bill No.	Item No.	Description	Unit	Quantity	Rate (Rs)	Amount (Rs)
		Reinforced Concrete Pipe Culverts				
		AASHTO M170, Class IV Reinforced Concrete pipe				
5.1	501o	Dimameter 910mm	M	132	6,560.47	865,982
5.2	502a	Granular material in bed to concrete pipe culverts	CM	47	724.95	34,073
		Drop inlets and Catch Basins				
5.3	506b	Catch basin, (1510x1200)	EACH	12	73,814.53	885,774
5.4	506c	Concrete chute	EACH	1	49,925.80	49,926
		Dimantling of Structures and Obstruction				
5.5	510	Dismantling box culverts and concrete ditch	CM	1,400	2,424.97	3,394,956
		Ditch Lining and Wash Checks				
5.6	512a1	Concrete ditch lining (Type I-1)	M	110	578.49	63,634
5.7	512a1	Concrete ditch lining (Type I-3)	M	74	1,156.98	85,616
5.8	512a3	Concrete ditch lining (Type I-4)	M	201	0.00	0
5.9	512a5	Concrete ditch lining (Type II-1A)	M	1,240	1,757.83	2,179,703
5.10	512a6	Concrete ditch lining (Type II-1B)	M	1,494	2,946.80	4,402,519
5.11	512a7	Concrete ditch lining (Type II-2A)	M	842	2,061.16	1,735,499
5.12	512a8	Concrete ditch lining (Type II-2B)	M	904	2,875.69	2,599,622
5.13	512a9	Concrete ditch lining (Type II-3A)	M	658	2,640.56	1,737,490
5.14	512a9	Concrete ditch lining (Type II-3B)	M	30	3,915.81	117,474
5.15	512a11	Concrete ditch lining (Type II-4A)	M	903	3,244.00	2,929,332
5.16	512a13	Concrete ditch lining (Type III-A)	M	572	6,417.15	3,670,610
5.17	512a14	Concrete ditch lining (Type III-B)	M	409	8,592.60	3,514,373
		Concrete Crib Work				
5.18	SP513	Concrete Crib Work (Type A)	SM	2,490	3,482.10	8,670,417
		Carried forward				32,467,600

WEST BANK BYPASS CONSTRUCTION PROJECT (PACKAGE II)

Bill No.	Item No.	Description	Unit	Quantity	Rate (Rs)	Amount (Rs)
		Flared Type Headwall				
5.19	SP504a	Flared Type Headwall	EACH	2	29,578.60	59,157
						59,157
TOTAL FOR BILL NO. 5 (Carried forward to Summary of Bill of Quantities)						32,526,758

WEST BANK BYPASS CONSTRUCTION PROJECT (PACKAGE II)

Bill No. 6 ANCILLARY WORKS

Bill No.	Item No.	Description	Unit	Quantity	Rate (Rs)	Amount (Rs)
		Concrete Kerbs, Gutters and Channels				
6.1	601d1	Pre-cast concrete Kerb (Type A)	M	3,632	1,154.13	4,191,783
6.2	601d2	Pre-cast concrete Kerb, (Type B)	M	2,996	737.82	2,210,523
6.3	602d	Precast concrete interlocking block sidewalks	SM	4,166	1,717.23	7,153,997
		Metal Beam Guard Rail				
6.4	604a	Metal Guard Rail	M	598	2,181.51	1,304,544
6.5	604b	Guard rail end pieces	EACH	46	1,988.01	91,449
6.6	SP604d1	Steel Post Guardrail Type A	EACH	363	6,475.35	2,350,552
6.7	SP604d2	Steel Post Guardrail Type B	EACH	51	2,078.95	106,026
		Pavement Marking				
6.8	607a	Traffic road sign category 1, size	EACH	44	8,271.35	363,940
6.9	607b	Traffic road sign category 2, size	EACH	17	10,947.43	186,106
6.10	607d	Traffic road sign category 3 (b)	EACH	10	14,116.42	141,164
		Pavement Marking				
6.11	608h1	Pavement Marking in reflective TP Paint for lines of 15cm width (White)	M	3,048	87.11	265,512
6.12	608h2	Pavement Marking in reflective TP Paint for lines of 15cm width (Yellow)	M	6,948	87.11	605,241
6.13	608k	Pavement marking in reflective TP paint for various signs	SM	1,034	468.75	484,688
6.14	SP608j	Pavement marking in reflective TP paint for 4M arrow	EACH	46	1,008.67	46,399
TOTAL FOR BILL NO. 6 (Carried forward to Summary of Bill of Quantities)						19,501,924

WEST BANK BYPASS CONSTRUCTION PROJECT (PACKAGE II)

Bill No. 7: MISCELLANEOUS

Bill No.	Item No.	Description	Unit	Quantity	Rate (Rs)	Amount (Rs)
		Control and Protection of Taffic				
7.1	706	Control and Protection of Taffic	Month	22	117,243.40	2,579,355
		Removal/Relocation of Utilities				
7.2	SP707a	Removal of Electric/Telephone line and existing services as specified	LS	(Provisional sum)		5,000,000
7.3	SP707b	Allow for Contractor's expenses, overhead and profit in connection with Item SP707a1	% of Item SP707a1	(Provisional sum)		250,000
		Land, Compensation and Loyalties				
7.4	SP709a1	Compensation for land, crops and buildings (PROVISIONAL)	LS	(Provisional sum)		2,500,000
7.5	SP709b	Allow for Contractor's expenses, overhead and profit in connection with Item 709a1	% of Item SP709a1	(Provisional sum)		125,000
		Contractor's Establishment on Site				
7.6	SP710a	Ground preparation of camp yard	LS			1,517,048
7.7	SP710b	Mobilization and demobilization of contractor's equipment	LS			8,890,180
		Environmental Control and Monitoring				
7.8	SP711	Envionmental monitoring	Month	25	193,558.85	4,838,971
		Sign Boards				
7.9	SP712	Erection of sign boards	EACH	2	176,797.20	353,594
TOTAL FOR BILL NO. 7 (Carried forward to Summary of Bill of Quantities)						24,013,848

WEST BANK BYPASS CONSTRUTION PROJECT (PACKAGE II)

Bill No. 8: ELECTRICT WORKS

Bill No.	Item No.	Description	Unit	Quantity	Rate (Rs)	Amount (Rs)
		Highway Lighting				
	SP801a	Lighting pole				
8.1		(iii) 10 meter high single arm tubular galvanized steel pole with base plate, RCC foundation, J-bolts, junction box and earthing etc on ground.	nr	4	69,746.25	278,985
	SP801b	Lighting luminarie				
8.2		(i) Road lighting luminarie complete with 150 watt H.P. sodium vabour lamp, CW1 ballast, p.f. correction capacitor etc. European origin	nr	4	76,487.50	305,950
	SP801c	Conduit under road for laying cables				
8.3		(i) 50mm dia Class B, PVC pipe (Beta or Shavyl) to be laid as per standard practice for laying of cables	m	30	5,745.16	172,355
8.4		(iv) 100mm dia Class B, RCC pipe Embedded in Class "B" Concrete, Complete with Excavation & Jointing etc.	m	185	1,278.13	236,453
	SP801d	PVC/PVC insulated, 600/1000V grade multi-core copper conductor with conductivity not less than 99.9% laid in pipe				
8.5		(i) 4-core 25mm^2	m	30	1,712.25	51,368
8.6		(iv) 4-core 2.5mm^2	m	530	164.32	87,090
8.6	SP801e	3-core 2.5mm^2 PVC/PVC insulated 600/1000V grade copper multi-core cable from junction box to the light fitting through the hollow pole	m	185	196.90	36,427
8.7	SP801f	Road lighting control panel, Imported	nr	1	86,806.25	86,806
	SP801g	Copper wires as earth continuity conductor				
8.8		(iii) Earth System comprising of 16mm dia.copper coated M.S. rods driven in ground for road lighting & Traffic signals control panel & poles with resistance of less than 2 ohms.	nr	1	52,421.25	52,421
8.9		(i) 1-core 16mm^2	m	30	251.50	7,545
8.10		(iii)1 -core 4mm^2	m	370	98.35	36,390
8.11	SP801i	Energy Meter 5 kilo watts for Intersection 1	nr	1	34,125.00	34,125
		Carried Over				1,385,914

Bill No.	Item No.	Description	Unit	Quantity	Rate (Rs)	Amount (Rs)
		Traffic Signal				
	SP802a	Traffic light pole				
8.25		(i) Traffic lights with 7 m long arm with imported signal light heads	nr	4	499,463.94	1,997,856
8.26		(ii) Traffic lights pole 3.4m height with imported signal light	nr	4	230,741.81	922,967
8.27	SP802b	Traffic signal light control panel Imported (16 Input & Outputs) S-7 Siemens or Equivalent European Origin with Expansion Module, Power Supply & Accessories	nr	1	277,674.38	277,674
8.28	SP802c	Main Distrbution Box	nr	1	91,075.00	91,075
8.29	SP802d	Main Hole/Hand Hole variable size as per drawing or as per Instruction of Engineer	nr	4	21,675.00	86,700
8.30	SP802e	**Field testing and review**	LS	1	93,873.75	93,874
						3,470,146
TOTAL FOR BILL NO. 8 (Carried forward to Summary of Bill of Quantities)						4,856,060

WEST BANK BYPASS CONSTRUCTION PROJECT (PACKAGE II)

Bill No. 9a DAYWORK (PROVISIONAL)

Bill No.	Item No.	Description	Unit	Quantity	Local Cost (Rs)	
					Rate	Amount
9a.1	SP 900a	Daywork (Labour)	L.S	**1**	425,814.08	425,814
9a.2	SP 900b	Daywork (Material)	L.S	**1**	6,705,744.79	6,705,745
9a.3	SP 900b	Daywork (Equipment)	L.S	1	7,702,335.64	7,702,336
TOTAL FOR BILL NO. 9 (Carried forward to Summary of Bill of Quantities)						**14,833,895**

APPENDIX H-2

ANALYSIS OF UNIT RATES FOR NALUCHI BRIDGE

(1) SCHEDULE OF UNIT RATES

UNIT RATE FOR NALUCHI BRIDGE

No	Description	Unit			Net cost (1)	Site-on-cost & overhead, profit (2)		Rate (4)	Remarks
	CONCRETE								**34.289%**
01	PROVISION OF CLASS A1 CONCRETE (PER 100M3)	CM			5,212.38				**Site-on-cost & overhead, profit**
02	PROVISION OF CLASS A1-2 CONCRETE (PER 100M3)	CM			5,560.13				
03	PROVISION OF CLASS A2 CONCRETE (PER 100M3)	CM			5,718.97				
04	PROVISION OF CLASS A3 CONCRETE (PER 100M3)	CM			6,129.58				
05	PROVISION OF CLASS D1 CONCRETE (PER 100M3)	CM			6,003.94				
06	PROVISION OF CLASS D2 CONCRETE (PER 100M3)	CM			6,152.46				
06-1	PROVISION OF CLASS D2-1 CONCRETE FOR PC GIRDER CONSTRUCTED BY CANTILEVER ERECTION (PER 100M3)	CM			12,589.33				
07	PROVISION OF LEAN CONCRETE (PER 100M3)	CM			4,843.69				
08	DELIVERING OF CONCRETE BY READY MIX TRUCK (PER 10M3)	CM			201.66				
09	PLACING OF CONCRETE BY PUMPING, H>2M R<30M (PER 10M3)	CM			357.35				
10	ASSEMBLING AND DISASSEMBLING CONCRETE PIPE WHEN L=60M PER (10M3)	CM			30.81				
11	PLACING OF CONCRETE BY MANUAL, H<2m R<15m (PER10 M3)	CM			374.05				
12	PLACING OF CONCRETE BY CRANE, H=25m, R=20m (PER 10 M3)	CM			405.64				
13	PLACING OF CONCRETE BY TOWER CRANE, (PER 10 M3)	CM			1,896.42				

UNIT RATE FOR NALUCHI BRIDGE

No	Description	Unit			Net cost (1)	Site-on-cost & overhead, profit (2)		Rate (4)	Remarks
14	PLACING OF CONCRETE BY TOWER CRANE + CONCRETE PUMP, (PER10 M3)	CM			2,457.19				
15	CURING OF CONCRETE (PER 10M3)	CM			19.24				
401g	PLACING OF LEAN CONCRETE BY MANUAL, (PER10M3)	CM			5,448.32	1,868.18		7,316.50	leveling concrete
401b2	CONCRETE CLASS A1, UNDERGROUND, (PER 10M3)	CM			5,817.75	1,994.85		7,812.59	
401a1	CONCRETE CLASS A1, GROUND, (PER 10M3)	CM			5,801.05	1,989.12		7,790.17	Substructure
401b1	CONCRETE CLASS A1, ELEVATED, (PER 10M3)	CM			5,801.05	1,989.12		7,790.17	Substructure
401b2	CONCRETE CLASS A1-2 FOR IN-SITU-PILE, (PER 10M3)	CM			6,197.79	2,125.16		8,322.94	P3 foundation
	CONCRETE CLASS A2-3 FOR PIER OF NALUCHI BR. (PER 10M3) UPTO H < 25M	CM			6,308.65	2,163.17		8,471.83	
401c3	CONCRETE CLASS A2-3 FOR PIER OF NALUCHI BR. (PER 10m3) UPTO H > 25M	CM			7,328.57	2,512.89		9,841.47	Pier P3
401d	CONCRETE CLASS A3 FOR TOWER OF NALUCHI BR. (PER 10M3)	CM			7,751.44	2,657.89		10,409.33	Pylon concrete
	CONCRETE CLASS D2-2 FOR PC BOX GIRDER OF NALUCHI BR. (PER 10M3), Ordinary Portland Cement	CM			8,842.85	3,032.12		11,874.98	Ordinary Portland cement
401f2	CONCRETE CLASS D2-2 FOR PC BOX GIRDER OF NALUCHI BR. (PER 10M3), HIGH-EARLY-STRENGTH PORTLAND CEMENT	CM			14,224.11	4,877.31		19,101.42	High-early-strength Portland cement
401e	CONCRETE CLASS D1 FOR PC SLAB OF APPROACH BR. (PER 10M3)	CM			6,594.19	2,261.08		8,855.27	Hollow deck slab
401e	CONCRETE CLASS D1 FOR PC BOX GIRDER , (PER 10M3)	CM			6,594.19	2,261.08		8,855.27	Viaduct

UNIT RATE FOR NALUCHI BRIDGE

No	Description	Unit			Net cost (1)	Site-on-cost & overhead, profit (2)		Rate (4)	Remarks
	REINFORCEMENT								
404b(i)	REINFORCEMENT, NOMINAL SIZE, 13-32MM (PER TON) FOR HOLLOW SLAB	ton			63,650.63	21,825.17		85,475.80	Hollow deck slab
404b(iv)	REINFORCEMENT, NOMINAL SIZE, 13-32MM (PER TON) FOR BOX GIRDER	ton			63,250.00	21,687.79		84,937.79	PC box girder of Naluchi Br.
404b(ii)	REINFORCEMENT, NOMINAL SIZE, 13-32MM (PER TON) BOX GIRDER	ton			64,468.44	22,105.58		86,574.02	Superstructure of viaduct
404b(iii)	REINFORCEMENT, NOMINAL SIZE 13-32MM (PER TON) FOR PIER OF NALUCHI BR.	ton			62,419.29	21,402.95		83,822.24	Pier P3
404b(i)	REINFORCEMENT, NOMINAL SIZE, 13-32MM (PER TON)	ton			64,035.74	21,957.22		85,992.96	All substructure
	TOWER CRANE & ELEVATOR								
32	COST OF TOWER CRANE	LS			8,892,755.43	3,049,236.91		11,941,992.33	
32-1	HIRING CHARGE OF TOWER CRANE	LS			6,756,361.95				
32-2	ASSEMBLING AND DISMANTLING TOWER CRANE	LS			1,433,661.70				
32-3	FOUNDATION	LS			81,267.31				
32-4	OPERATION COST	LS			493,394.35				
32-5	MAINTENANCE COST	LS			128,070.11				
33	COST OF ELEVATOR	LS			1,681,464.11	576,557.23		2,258,021.34	
33-1	HIRING CHARGE OF ELEVATOR	LS			585,582.11				

UNIT RATE FOR NALUCHI BRIDGE

No	Description	Unit			Net cost (1)	Site-on-cost & overhead, profit (2)		Rate (4)	Remarks
33-2	ASSEMBLING AND DISMANTLING ELEVATOR	LS			487,772.45				
33-3	FOUNDATION	LS			65,013.85				
33-4	OPERATION COST	LS			320,173.68				
33-5	MAINTENANCE COST	LS			222,922.03				
	FORMWORK								
SP403b3	FORMWORK TYPE B1 (FOR OUTSIDE OF PC HOLLOW SLAB)	SM			994.69	341.07		1,335.76	East viaduct
34-1	INSTALLATION AND DISMANTLING FORMWORK FOR BOTTOM & EXTERNAL WALL OF PC HOLLOW SLAB PER 10M2	SM			940.98	322.65		1,263.64	
34-2	INSTALLATION AND DISMANTLING FORMWORK FOR CANTILEVER SLAB OF PC HOLLOW SLAB PER 10M2	SM			1,158.22	397.14		1,555.36	
34-3	INSTALLATION AND DISMANTLING FORMWORK FOR GIRDER END OF PC HOLLOW SLAB (PER 10M2)	SM			1,421.51	487.42		1,908.94	
SP403b4	FORMWORK TYPE B2 FOR INSIDE OF PC HOLLOW SLAB (PER 10M2)	SM			1,638.14	561.70		2,199.84	East viaduct
SP403a1	FORMWORK TYPE A FOR ALL SUBSTRUCTURE	SM			1,268.99	435.12		1,704.11	East viaduct
SP403a2	FORMWORK TYPE C1 (FOR EXTERNAL OF PIER 3) PER100 M2	SM			889.82	305.11		1,194.93	Naluchi Br.
SP403a3	FORMWORK TYPE C2 (FOR INTERNAL OF PIER 3 (PER 100 M2)	SM			901.81	309.22		1,211.03	Naluchi Br.
SP403b1	FORMWORK TYPE C3 (FOR PIER TABLE OF PC BOX GIRDER) PER 10M2 WOODEN FORMWORK	SM			3,072.17	1,053.42		4,125.59	Naluchi Br.

UNIT RATE FOR NALUCHI BRIDGE

No	Description	Unit			Net cost (1)	Site-on-cost & overhead, profit (2)		Rate (4)	Remarks
SP403b2	FORMWORK TYPE C4 (FOR GIRDER END BLOCK OF PC BOX GIRDER) PER 10M2 WOODEN FORMWORK	SM			3,072.17	1,053.42		4,125.59	Naluchi Br.
SP403b3	FORMWORK TYPE C5 (FOR PYLON OF PC BOX GIRDER (PER 100M2)	SM			1,933.75	663.06		2,596.82	Naluchi Br.
SP403b1	FORMWORK TYPE D1 (FOR OUTSIDE PC BOX GIRDER)	SM			1,732.94	594.21		2,327.14	West viaduct
42-1	INSTALLATION AND DISMANTLING EXTERNAL WALL OF PC BOX GIRDER INCLUDING FABRICATION OF WOODEN FORMWORK, (PER 10M2)	SM			2,354.08	807.19		3,161.26	
42-2	INSTALLATION AND DISMANTLING BOTTOM FORM INCLUDING FABRICATION OF STEEL FORMWORK (PER 10M2)	SM			971.21	333.02		1,304.23	
42-3	INSTALLATION AND DISMANTLING CANTILEVER SLAB FORMWORK INCLUDING FABRICATION OF WOODEN FORMWORK (PER 10M2)	SM			1,865.08	639.52		2,504.60	
SP403b2	FORMWORK TYPE D2 (FOR INSIDE OF PC BOX GIRDER) PER 10M2	SM			2,309.59	791.94		3,101.53	West viaduct
	FALSEWORK AND SCAFFOLDING								
SP402a1	SUPPORTING TYPE A (FOR PC BOX HOLLOW SLAB ON EAST SIDE APPROACH VIADUCT)	LS			2,810,483.44	963,686.67		3,774,170.10	East viaduct
SP402a5	SUPPORTING TYPE E1 (FOR P1 PIER HEAD ON EAST SIDE APPROACH VIADUCT)	LS			89,859.15	30,811.80		120,670.95	East viaduct
SP402b4	SCAFFOLDING TYPE C (FOR A1 AND P1 PIER ON EAST SIDE APPROACH VIADUCT)	LS			645,357.69	221,286.70		866,644.38	East viaduct
SP402a2	SUPPORTING TYPE B (HANGING SUPPORT FOR GIRDER END ON NALUCHI BRIDGE)	LS			3,086,725.28	1,058,407.23		4,145,132.51	Naluchi Br.

UNIT RATE FOR NALUCHI BRIDGE

No	Description	Unit			Net cost (1)	Site-on-cost & overhead, profit (2)		Rate (4)	Remarks
SP402a3	SUPPORTING TYPE C (CANTILEVER SUPPORT FOR PIER HEAD ON PIER 3)	LS			2,962,529.44	1,015,821.72		3,978,351.16	Naluchi Br.
SP402a6	SUPPORTING TYPE E2 (FOR PIER 4 PIER HEAD ON NALUCHI BRIDGE)	LS			620,683.41	212,826.14		833,509.55	Naluchi Br.
SP402b1	SCAFFOLDING TYPE A1 (FOR OUTSIDE OF PIER 3)	LS			1,319,910.29	452,584.04		1,772,494.33	Naluchi Br.
SP402b2	SCAFFOLDING TYPE A2 (FOR INSIDE OF PIER 3)	LS			400,760.94	137,416.92		538,177.86	Naluchi Br.
SP402b3	SCAFFOLDING TYPE B (FOR PYLON OF NALUCHI BRIDGE)	LS			1,817,104.14	623,066.84		2,440,170.98	Naluchi Br.
SP402b4	SCAFFOLDING TYPE C (FOR PIER P2 AND P4 OF NALUCHI BRIDGE)	LS			81,345.76	27,892.65		109,238.40	Naluchi Br.
SP402a4	SUPPORTING TYPE D (FOR PC BOX GIRDER ON WEST SIDE APPROACH VIADUCT)	LS			13,113,048.42	4,496,333.17		17,609,381.59	West side viaduct
SP402b4	SCAFFOLDING Type C (for Pier P5, P6, P7 and A2 Pier of PC box girder)	LS			1,162,818.57	398,718.86		1,561,537.43	West side viaduct
100	COST OF FRAME SCAFFOLDING (PER 100M2)	SM			1.74	0.60		2.34	
100	COST OF FRAME SCAFFOLDING (PER 100M2)	CM			1.45	0.50		1.95	
101	COST OF ROLLED STEEL, (PER TON)	TON·DAY			239.30	82.05		321.35	
104	COST OF STEEL FORMWORK FOR SUBSTRUCTURE	SM			124.48	42.68		167.17	
105	COST OF STEEL FORMWORK FOR SUPERSTRUCTURE	SM			580.00	198.88		778.87	
60-1	INSTALLATION AND DISMANTLING H BEAM FOR SUPPORT OF BENT, (PER 10M)	M			337.88				
60-3	INSTALLATION AND DISMANTLING FRAME SUPPORT, (PER 100M3)	CM			183.61				

UNIT RATE FOR NALUCHI BRIDGE

No	Description	Unit			Net cost (1)	Site-on-cost & overhead, profit (2)		Rate (4)	Remarks
54-6	INSTALLATION AND REMOVAL OF FRAME SCAFFOLDING, n<0.1, h<30m (PER 100M2)	SM			243.16				
54-8	INSTALLATION AND REMOVAL OF FRAME SUPPORT H<30M, F<80kN/M2 (PER 100 M3)	CM			409.61				
54-9	INSTALLATION AND DEMOLITION OF BRACKET FOR PIER TABLE (PER TON)	TON			24,434.70				
54-10	INSTALLATION AND DEMOLITION OF BRACKET FOR END SPAN (PER TON)	TON			27,284.49				
54-11	INSTALLATION AND DEMOLITION OF FRAME SUPPORT OVER BRACKET OF PIER TABLE (PER 10M3)	CM			1,594.68				
54-12	INSTALLATION AND DEMOLITION OF FRAME SUPPORT UNDER CANTILEVERED SLAB AND INSIDE BOX GIRDER(PER 10M3)	CM			528.47				
	SHINSO FOUNDATION								
SP107f	SHINSO FOUNDATION (15.0M DIAMETER, L=10M)	LS			7,449,427.30	2,554,334.13		10,003,761.43	
58-1	EXCAVATION PER M IN DEPTH	M			75,184.75				
58-2	EXCAVATION BY BLASTING PER M3	CM			549.24				
58-3	ERECTION LINER PLATE PER METER IN DEPTH	M			374,441.71				
58-4	INSTALLATION OF GROUT PIPE	LS			5,663.30				
58-5	GROUTING PER M3	CM			3,135.48				
58-6	RING CONCRETE	LS			378,626.51				

UNIT RATE FOR NALUCHI BRIDGE

No	Description	Unit			Net cost (1)	Site-on-cost & overhead, profit (2)		Rate (4)	Remarks
SP406h1	EXPANSION JOINT 100MM (PER M)	M			37,624.74	12,901.15		50,525.89	
SP406h2	EXPANSION JOINT, 160MM (PER M)	M			208,176.79	71,381.74		279,558.52	
SP406h3	EXPANSION JOINT 240MM (PER M)	M			274,004.84	93,953.52		367,958.36	
62-1	CONCRETE CLASS A4 FOR EXPANSION JOINT (PER 10M3)	CM			5,920.63				
SP406e1	ELASTOMETIC BEARING PAD, FOR HOLLOW SLAB (620x470x95MM) PER 10 PADS	EACH			102,971.77	35,307.99		138,279.76	East viaduct
SP406e2	ELASTOMERIC BEARING PAD, FOR HOLLOW SLAB (770x570x95MM) PER 10 PADS	EACH			105,326.09	36,115.26		141,441.35	East viaduct
SP406e3	ELASTOMERIC BERING PAD, FOR HOLLOW SLAB (1070x1070x240MM) per 10 PADS	EACH			304,513.30	104,414.56		408,927.86	Naluchi Br.
SP406e4	ELASTOMERIC BEARING PAD, FOR HOLLOW SLAB (670x520x122mm) PER 10 PADS	EACH			160,503.43	55,035.02		215,538.44	West viaduct
SP406j	DRAIN PIT FOR BRIDGE DECK DRAIN (PER PLACE)	EACH			2,726.72	934.97		3,661.69	
SP403c	FORMWORK TYPE E FOR BARRIER, CONCRETE RAILING (PER 10M2)	M			1,638.14	561.70		2,199.84	
SP406i	DRAIN PIPE FOR NALUCHI BRIDGE (PER BRIDGE)	M			1,381.60	473.74		1,855.34	Naluchi Br.
SP406k	SLAB DRAIN	M			6,898.56	2,365.45		9,264.01	
70-1	INSTALLATION OF CONCRETE ANCHOR BOLTS (PER 100 BOLTS)	EACH			114.11				
70-2	INSTALLATION OF PVC PIPE (PER 10M)	M			1,077.99				
SP406g1	INSTALLATION OF ANCHOR BARS (DIA.65MM) PER EACH	Each			65,226.74	22,365.60		87,592.34	

UNIT RATE FOR NALUCHI BRIDGE

No	Description	Unit			Net cost (1)	Site-on-cost & overhead, profit (2)		Rate (4)	Remarks
SP406g2	INSTALLATION OF ANCHOR BARS (DIA.90MM) PER EACH	Each			94,895.53	32,538.73		127,434.26	
SP406g3	INSTALLATION OF ANCHOR BARS (DIA. 125MM) PER EACH	Each			412,100.38	141,305.10		553,405.48	
75	BRIDGE NAME PALATE (PER PLATE)	LS			31,632.91	10,846.61		42,479.52	
SP405e	HIRING CHARGE OF FORM TRAVELER	EACH			11,051,102.70	3,789,312.61		14,840,415.31	
76-1	ASSEMBLING AND DISMANTLING OF TRAVELING FORM	LS			637,583.87	218,621.13		856,205.01	
76-2	FORWARD AND INSTALLATION OF TRAVELING FORM (PER BLOCK)	BLOCK			12,244.70				
76-3	DRAW BACK OF TRAVELING FORM (PER 10M)	M			916.90				
	PC WORK								
SP405c1	INSTALLATION OF LONGITUDINAL PC CABLE, 12S-15.2mm, INCLUDING GROUTING (PER 100M)	TON			128,379.63	44,020.09		172,399.72	Hollow deck slab
SP405c2	STRESSING LONGITUDINAL CABLE, 12S-15.2mm, INCLUDING INSTALLATION OF ANCHORAGE (PER 10 CABLE)	EACH			10,640.52	3,648.53		14,289.05	Hollow deck slab
SP405d1	INSTALLATION OF LONGITUDINAL PC CABLE, 12S-15.2mm, INCLUDING GROUTING (PER TON)	TON			260,535.89	89,335.15		349,871.04	Naluchi Bridge
SP405d5	INSTALLATION OF TRANSVERSE PC CABLE, 4S-15.2mm INCLUDING GROUTING (PER TON)	Ton			286,150.68	98,118.21		384,268.89	Naluchi Bridge
SP405d8	INSTALLATION OF TRANSVERSE PC CABLE, 12S-15.2mm, INCLUDING GROUTING (PER TON)	Ton			260,535.89	89,335.15		349,871.04	Naluchi Bridge
SP414a1	INSTALLATION OF STAY CABLE, 19S-15.2mm (PER TON)	Ton			459,808.84	157,663.85		617,472.69	Naluchi Bridge

UNIT RATE FOR NALUCHI BRIDGE

No	Description	Unit			Net cost (1)	Site-on-cost & overhead, profit (2)		Rate (4)	Remarks
SP414a2	INSTALLATION OF STAY CABLE, 27S-15.2mm (PER TON)	Ton			458,199.42	157,112.00		615,311.41	Naluchi Bridge
SP405d2	STRESSING LONGITUDINAL PC CABLE, 12S-15.2mm, INCLUDING INSTALLATION OF LIVE END ANCHORAGE (PER 10 ANCHORS)	EACH			13,964.72	4,788.36		18,753.09	Naluchi Bridge
SP405d3	INSTALLATION OF DEAD END ANCHORAGE FOR LONGITUDINAL PC CABLE, 12S-15.2mm, (PER 10 ANCHORS)	EACH			5,973.39	2,048.22		8,021.61	Naluchi Bridge
SP405d6	STRESSING TRANSVERSE PC CABLE 4S-15.2 mm, INCLUDING INSTALLATION OF LIVE END ANCHORAGE (PER 10 ANCHORS)	EACH			4,867.54	1,669.03		6,536.57	Naluchi Bridge
SP405d7	INSTALLATION OF DEAD END ANCHORAGE FOR TRANSVERSE PC CABLE, 4S-15.2mm (PER 10 ANCHORS)	EACH			2,508.74	860.22		3,368.96	Naluchi Bridge
SP414b1	STRESSING STAY CABLE , 19S-15.2 (PER 10 ANCHORS)	EACH			341,265.10	117,016.39		458,281.48	Naluchi Bridge
SP414b2	STRESSING OF STAY CABLE , 27S-15.2 (PER 10 ANCHOR)	EACH			406,208.11	139,284.70		545,492.81	Naluchi Bridge
SP405d11	INSTALLATION OF PC BAR, 32mm, INCLUDING GROUTING (PER TON)	Ton			584,178.49	200,308.96		784,487.45	Naluchi Bridge
SP405d12	STRESSING PC BAR, 32mm INCLUDING INSTALLATION OF LIVE END ANCHORAGE (PER 10 ANCHORS)	EACH			27,305.50	9,362.78		36,668.28	Naluchi Bridge
SP405d13	INSTALLATION OF DEAD END ANCHORAGE FOR PC BAR, 32mm (PER 10 ANCHOR)	EACH			17,120.74	5,870.53		22,991.28	Naluchi Bridge
SP405d14	JOINTING PC BAR, 32mm (PER 10 JOINT)	EACH			5,961.58	2,044.17		8,005.75	Naluchi Bridge
SP405e1	INSTALLATION OF LONGITUDINAL PC CABLE INCLUDING GROUTING, 12S-15.2mm (PER 100M)	Ton			157,461.12	53,991.84		211,452.96	Viaduct

UNIT RATE FOR NALUCHI BRIDGE

No	Description	Unit			Net cost (1)	Site-on-cost & overhead, profit (2)		Rate (4)	Remarks
SP405e7	INSTALLATION OF TRANSVERSE PC CABLE INCLUDING GROUT, 3S-15.2mm (PER 100M)	Ton			182,802.99	62,681.32		245,484.31	Viaduct
SP405b1	STRESSING LONGITUDINAL PC CABLE, 12S-15.2mm, INCLUDING INSTALLATION OF LIVE END ANCHORAGES (per 10 cables), STRESSING FROM BOTH ENDS	EACH			22,143.70	7,592.85		29,736.55	Viaduct
	STRESSING LONGITUDINAL PC CABLE, 12S-15.2MM, INCLUDING INSTALLATION OF LIVE END ANCHORAGE AND DEAD END ANCHORAGE (per 10 cables), STRESSING FROM ONE END	EACH			15,440.08	5,294.25		20,734.33	
SP405e8	STRESSING TRANSVERSE PC CABLE , 3S-15.2mm INCLUDING INSTALLATION OF LIVE END ANCHORAGE AND DEAD END ANCHORAGE (per 10 cables), STRESSING FROM ONE END	EACH			5,197.25	1,782.09		6,979.34	Viaduct
SP405e4	JOINTING LONGITUDINAL PC CABLE, 12S-15.2mm (PER JOINT)	EACH			32,617.06	11,184.06		43,801.12	Viaduct
	<u>OTHERS</u>							0.00	
SP313	BRIDGE DECK WATERPROOFING (PER 100M2)	SM			742.25	254.51		996.76	
97	HIRING CHARGE OF CONCRETE BATCHING PLANT	CM			1,235.94	423.79		1,659.73	
98	HIRING CHARGE OF CONCRETE PUMP	CM			413.64	141.83		555.48	
99	INSTALLATION OF ANCHOR FOR WATER SUPPLY BRACKET (PER ONE)	EACH			74.60	25.58		100.18	
100	INSTALLATION OF BRACKET FOR WATER SUPPLY	EACH							SP614a, b, c, d

UNIT RATE FOR NALUCHI BRIDGE

No	Description	Unit			Net cost (1)	Site-on-cost & overhead, profit (2)		Rate (4)	Remarks
101	NON SHRINK MORTAR (PER M3)	CM			22,555.22	7,733.96		30,289.18	
SP606c	INSTALLATION OF STEEL RAILING	M			15,303.80	5,247.52		20,551.32	
SP615a	STAIR TO NALUCHI BRIDGE DECK AT PIER 2	LS			78,702.01	26,986.13		105,688.14	
SP615b	STAIR TO NALUCHI BRIDGE DECK AT PIER 4	LS			7,265,518.65	2,491,273.69		9,756,792.34	
104	SPREADING COST OF TOWER CRANE				1,388.71	476.17		1,864.88	
404b(vi)	MECHANICAL JOINT (TYPE 4) (1/2)	EACH			976.28	334.76		1,311.03	
404b(vi)	MECHANICAL JOINT (TYPE 4) (2/2)	EACH			976.28	334.76		1,311.03	Average
SP413a	INSTALLATION OF TOWER FRAME (PER ONE SIDE)	EACH			360,987.50	123,779.00		484,766.51	
SP405d5	ASSEMBLY AND ERECTION OF TOWER FRAME (PER ONE BLOCK)	BLOCK			16,653.88	5,710.45		22,364.32	
SP407d4	STRESSING LONGITUDINAL PC CABLE, 12S-15.2MM (PER 10 ANCHORS)	EACH			11,228.43	3,850.12		15,078.55	PC work Naluchi Br.
SP413c	INSTALLATION OF WALKWAY FOR INSPECTION	LS			69,795.56	23,932.20		93,727.76	
SP413a	INSTALLATION OF TOWER FRAME (PER ONE SIDE)	LS			360,987.50	123,779.00		484,766.51	
108	ASSEMBLY AND ERECTION OF TOWER FRAME (PER ONE BLOCK)	BLOCK			16,653.88	5,710.45		22,364.32	
SP413f	INSTALLATION OF SADDLE (PER ONE SIDE)	EACH			6,979,100.00	2,393,063.60		9,372,163.60	

UNIT RATE FOR NALUCHI BRIDGE

No	Description	Unit			Net cost (1)	Site-on-cost & overhead, profit (2)		Rate (4)	Remarks
SP413c	INSTALLATION OF WALKWAY FOR INSPECTION	LS			69,795.56	23,932.20		93,727.76	
55-1	FOUNDATION OF SUPPORT	LS			404,196.28	138,594.86		542,791.14	
55-2	INSTALLATION AND DISMANTLING SUPPORT (PER 100M3)	CM			659.16	226.02		885.18	
55-3	INSTALLATION AND DISMANTLING H BEAM UNDER SUPPORT (PER 10M)	M			317.65	108.92		426.57	
55-4	INSTALLATION AND DISMANTLING FLAME SUPPORT INCLUDING COST OF FLAME SUPPORT (PER 100M3)	CM			318.31	109.15		427.46	
55-4	INSTALLATION AND DISMANTLING FOUNDATION STEEL SHEET PILE (PER 10M2)	CM			318.31	109.15		427.46	
55-5	INSTALLATION AND DISMANTLING FOUNDATION STEEL SHEET PILE (PER 10M2)	SM			2,070.02	709.79		2,779.81	

(2) ANALYSIS OF UNIT RATES

01 PROVISION OF CLASS A1 CONCRETE (PER 100M^3)

No.	Description	Specification	Quantity	Unit	Local Cost (Rs)		Foreign Cost (US$)		Remarks
					Rate	Amount	Rate	Amount	
1	Hiring cost of batching plant		100.00	m^3	1,235.94	123,593.86			*1
2	Wheel loader		0.83	day	7,720.59	6,433.82			
3	Fuel		110.9	liter	38.05	4,218.27			*3 (100/120) × 133.0
4	Cement		34.1	t	6,100.00	208,162.50			Allow 5% of loss
5	Crushed stone		79.4	m^3	1,304.00	103,601.19			〃
6	Sand		55.7	m^3	1,060.00	59,019.08			〃
7	Admixture		102.4	liter	25.00	2,559.38			〃
8	Plant operator		0.83	manday	1,730.94	1,442.45			
9	Labor		6.67	manday	904.14	6,027.61			7 labor/120m^3
10	Maintenance, calibration		1	LS		6,179.69			5% of hiring cost of batching plant
	1,360,000								
						521,237.86			
						5,212.38	Rs/m^3		

Note:

Average mixing volume per day, D	120.00	m^3/day	
Mixing capacity, Q	30	m^3/hour	
Operating time per day	4.50	h	including 30min idling time
Generator	1	day	
Wheel loader	1	day	
Labor	8	man·day	
*1 Hiring charge of batching plant per m^3	1,235.94	Rs/m^3	

*3 Fuel consumption per day

Generator, 100kW	70.4	liter/day
Wheel loader, 2.1m^3	62.7	〃
Total	133.0	liter/day

02 PROVISION OF CLASS A1-2 CONCRETE (PER 100M^3)

No.	Description	Specification	Quantities	Unit	Local (Rs)		Foreign (US$)		Remarks
					Rate	Amount	Rate	Amount	
1	Hiring cost of batching plant		100.00	m^3	1,235.94	123,593.86			*1
2	Wheel loader		0.83	day	7,720.59	6,433.82			
3	Fuel		110.9	liter	38.05	4,218.27			*3 (100/120) × 133.0
4	Cement		42.0	t	6,100.00	256,200.00			Allow 5% of loss
5	Crushed stone		72.7	m^3	1,304.00	94,775.59			〃
6	Sand		50.9	m^3	1,060.00	53,991.35			〃
7	Admixture		126.0	liter	25.00	3,150.00			〃
8	Plant operator		0.83	manday	1,730.94	1,442.45			
9	Labor		6.67	manday	904.14	6,027.61			7 labor/120m^3
10	Maintenance, calibration		1	LS		6,179.69			5% of hiring cost of batching plant
	Net cost					556,012.65			
						5,560.13	Rs/m^3		

Note:

Average mixing volume per day, D	120.00	m^3/day	
Mixing capacity, Q	30	m^3/hour	
Operating time per day	4.50	h	including 30min idling time
Generator	1	day	
Wheel loader	1	day	
Labor	8	man·day	

*3 Fuel consumption per day

Generator, 100kW	70.4	liter/day
Wheel loader, 2.1m^3	62.7	〃
Total	133.0	liter/day

*1 Hiring charge of batching plant per 1,235.94 Rs/m^3

03 PROVISION OF CLASS A2 CONCRETE (PER 100M^3)

No.	Description	Specification	Quantity	Unit	Local Cost (Rs)		Foreign Cost (US$)		Remarks
					Rate	Amount	Rate	Amount	
1	Hiring cost of batching plant		100.00	m^3	1,235.94	123,593.86			*1
2	Wheel loader		0.83	day	7,720.59	6,433.82			
3	Fuel		110.9	liter	38.05	4,218.27			*3 (100/120) × 133.0
4	Cement		44.6	t	6,100.00	272,212.50			Allow 5% of loss
5	Crushed stone		75.1	m^3	1,304.00	97,977.78			〃
6	Sand		52.7	m^3	1,060.00	55,815.56			〃
7	Admixture		133.9	liter	25.00	3,346.88			〃
8	Plant operator		0.83	manday	1,730.94	1,442.45			
9	Labor		6.67	manday	101.47	676.47			7 labor/120m^3
10	Maintenance, calibration		1	LS		6,179.69			5% of hiring cost of batching plant
	Net cost					571,897.28			
						5,718.97	Rs/m^3		

Note:

Average mixing volume per day, D	120.00	m^3/day	
Mixing capacity, Q	30	m^3/hour	
Operating time per day	4.50	h	including 30min idling time
Generator	1	day	
Wheel loader	1	day	
Labor	8	man·day	
*1 Hiring charge of batching plant per m^3	1,235.94	Rs/m^3	

*3 Fuel consumption per day

Generator, 100kW	70.4	liter/day
Wheel loader, 2.1m^3	62.7	〃
Total	133.0	liter/day

04 PROVISION OF CLASS A3 CONCRETE (PER 100M^3)

No.	Description	Specification	Quantity	Unit	Local Cost (Rs)		Foreign Cost (US$)		Remarks
					Rate	Amount	Rate	Amount	
1	Hiring cost of batching plant		100.00	m^3	1,235.94	123,593.86			*1
2	Wheel loader		0.83	day	7,720.59	6,433.82			
3	Fuel		110.9	liter	38.05	4,218.27			*3 (100/120) × 133.0
4	Cement		49.9	t	6,100.00	304,237.50			Allow 5% of loss
5	Crushed stone		75.8	m^3	1,304.00	98,781.44			〃
6	Sand		46.8	m^3	1,060.00	49,574.17			〃
7	Admixture		498.8	liter	25.00	12,468.75			〃
8	Plant operator		0.83	manday	1,730.94	1,442.45			
9	Labor		6.67	manday	904.14	6,027.61			7 labor/120m^3
10	Maintenance, calibration		1	LS		6,179.69			5% of hiring cost of batching plant
	Net cost					612,957.57			
						6,129.58	Rs/m^3		

Note:

Average mixing volume per day, D	120.00	m^3/day
Mixing capacity, Q	30	m^3/hour
Operating time per day	4.50	h
Generator	1	day
Wheel loader	1	day
Labor	8	man·day
*1 Hiring charge of batching plant per m^3	1,235.94	Rs/m^3

including 30min idling time

*3 Fuel consumption per day

Generator, 100kW	70.4	liter/day
Wheel loader, 2.1m^3	62.7	〃
Total	133.0	liter/day

05 PROVISION OF CLASS D1 CONCRETE (PER 100M^3)

No.	Description	Specification	Quantity	Unit	Local Cost (Rs)		Foreign Cost (US$)		Remarks
					Rate	Amount	Rate	Amount	
1	Hiring cost of batching plant		100.00	m^3	1,235.94	123,593.86			*1
2	Wheel loader		0.83	day	7,720.59	6,433.82			
3	Fuel		110.9	liter	38.05	4,218.27			*3 (100/120) × 133.0
4	Cement		47.3	t	6,100.00	288,225.00			Allow 5% of loss
5	Crushed stone		77.8	m^3	1,304.00	101,514.82			〃
6	Sand		48.1	m^3	1,060.00	50,945.94			〃
7	Admixture		472.5	liter	25.00	11,812.50			〃
8	Plant operator		0.83	manday	1,730.94	1,442.45			
9	Labor		6.67	manday	904.14	6,027.61			7 labor/120m^3
10	Maintenance, calibration		1	LS		6,179.69			5% of hiring cost of batching plant
	Net cost					600,393.96		0.00	
						6,003.94	Rs/m^3	0.00	US$/m^3

Note:

Average mixing volume per day, D	120.00	m^3/day	
Mixing capacity, Q	30	m^3/hour	
Operating time per day	4.50	h	including 30min idling time
Generator	1	day	
Wheel loader	1	day	
Labor	8	man·day	
*1 Hiring charge of batching plant per m^3	1,235.94	Rs/m^3	

*3 Fuel consumption per day

Generator, 100kW	70.4	liter/day
Wheel loader, 2.1m^3	62.7	〃
Total	133.0	liter/day

06 PROVISION OF CLASS D2 CONCRETE (PER 100M^3)

No.	Description	Specification	Quantity	Unit	Local Cost (Rs)		Foreign Cost (US$)		Remarks
					Rate	Amount	Rate	Amount	
1	Hiring cost of batching plant		100.00	m^3	1,235.94	123,593.86			*1
2	Wheel loader		0.83	day	7,720.59	6,433.82			
3	Fuel		110.9	liter	38.05	4,218.27			*3 (100/120) × 133.0
4	Cement		49.9	t	6,100.00	304,237.50			Allow 5% of loss
5	Crushed stone		76.9	m^3	1,304.00	100,305.36			〃
6	Sand		47.5	m^3	1,060.00	50,338.96			〃
7	Admixture		498.8	liter	25.00	12,468.75			〃
8	Plant operator		0.83	manday	1,730.94	1,442.45			
9	Labor		6.67	manday	904.14	6,027.61			7 labor/120m^3
10	Maintenance, calibration		1	LS		6,179.69			5% of hiring cost of batching plant
	Net cost					615,246.28			
						6,152.46	Rs/m^3		

Note:

Average mixing volume per day, D	120.00	m^3/day	
Mixing capacity, Q	30	m^3/hour	
Operating time per day	4.50	h	including 30min idling time
Generator	1	day	
Wheel loader	1	day	
Labor	8	man·day	
*1 Hiring charge of batching plant per m^3	1,235.94	Rs/m^3	

*3 Fuel consumption per day

Generator, 100kW	70.4	liter/day
Wheel loader, 2.1m^3	62.7	〃
Total	133.0	liter/day

06-1 PROVISION OF CLASS D2-1 CONCRETE FOR PC GIRDER CONSTRUCTED BY CANTILEVER ERECTION (PER 100M^3)

No.	Description	Specification	Quantity	Unit	Local Cost (Rs)		Foreign Cost (US$)		Remarks
					Rate	Amount	Rate	Amount	
1	Hiring cost of batching plant		100.00	m^3	1,235.94	123,593.86			*1
2	Wheel loader		0.83	day	7,720.59	6,433.82			
3	Fuel		110.9	liter	38.05	4,218.27			*3 (100/120) × 133.0
4	High-early-strength Portland cement		49.9	t	19,006.00	947,924.25			Allow 5% of loss
5	Crushed stone		76.9	m^3	1,304.00	100,305.36			〃
6	Sand		47.5	m^3	1,060.00	50,338.96			〃
7	Admixture		498.8	liter	25.00	12,468.75			〃
8	Plant operator		0.83	manday	1,730.94	1,442.45			
9	Labor		6.67	manday	904.14	6,027.61			7 labor/120m^3
10	Maintenance, calibration		1	LS		6,179.69			5% of hiring cost of batching plant
	Net cost					1,258,933.03			
						12,589.33	Rs/m^3		

Note:

Average mixing volume per day, D	120.00	m^3/day
Mixing capacity, Q	30	m^3/hour
Operating time per day	4.50	h
Generator	1	day
Wheel loader	1	day
Labor	8	man·day

including 30min idling time

*3 Fuel consumption per day

Generator, 100kW	70.4	liter/day
Wheel loader, 2.1m^3	62.7	〃
Total	133.0	liter/day

*1 Hiring charge of batching plant per m^3 1,235.94 Rs/m^3

07 PROVISION OF LEAN CONCRETE (PER 100M^3)

No.	Description	Specification	Quantity	Unit	Local Cost (Rs)		Foreign Cost (US$)		Remarks
					Rate	Amount	Rate	Amount	
1	Hiring cost of batching plant		100.00	m^3	1,235.94	123,593.86			*1
2	Wheel loader		0.8	day	7,720.59	6,433.82			
3	Fuel		110.9	liter	38.05	4,218.27			*3 (100/120) × 133.0
4	Cement		29.4	t	6,100.00	179,340.00			Allow 5% of loss
5	Crushed stone		70.9	m^3	1,304.00	92,478.00			〃
6	Sand		61.0	m^3	1,060.00	64,655.76			〃
7	Admixture		0.0	liter	25.00	0.00			〃
8	Plant operator		0.83	manday	1,730.94	1,442.45			
9	Labor		6.67	manday	904.14	6,027.61			7 labor/120m^3
10	Maintenance, calibration		1	LS		6,179.69			5% of hiring cost of batching plant
	Net cost					484,369.47			
						4,843.69	Rs/m3		

Note:

Average mixing volume per day, D	120.00	m^3/day	
Mixing capacity, Q	30	m^3/hour	
Operating time per day	4.50	h	including 30min idling time
Generator	1	day	
Wheel loader	1	day	
Labor	8	man·day	
*1 Hiring charge of batching plant per m^3	1,235.94	Rs/m^3	

*3 Fuel consumption per day

Generator, 100kW	70.4	liter/day
Wheel loader, 2.1m^3	62.7	〃
Total	133.0	liter/day

08 DELIVERING OF CONCRETE BY READY MIX TRUCK (PER 10M^3)

No.	Description	Specification	Quantity	Unit	Local Cost (Rs)		Foreign Cost (US$)		Remarks
					Rate	Amount	Rate	Amount	
1	Hiring cost of ready mix truck		0.96	hour	1,615.94	1,556.09			10/Q
2	Fuel		12.102	liter	38.05	460.46			
				Total		2,016.55	Rs		
						201.66	Rs/m^3		

Note:

Ready mix truck, q =	4.50	m^3
Average distance to deposit site from concrete plant, L	0.5	km
Average traveling speed	10	km/h
Transportation time	3.0	min.
Mixing time t = 4.5/30.0	9.0	min.
Allowance for waiting time for discharge	5.0	min.
Average time of discharge	9.0	min.
Cycle time, cm	26.0	min.
Delivering capacity, Q/cm	10.4	m^3/h

09 PLACING OF CONCRETE BY PUMPING, H>2M R<30M (PER 10M^3)

No.	Description	Specification	Quantity	Unit	Local Cost (Rs)		Foreign Cost (US$)		Remarks
					Rate	Amount	Rate	Amount	
1	Hiring cost of concrete pump		1.03	hour	1,575.63	1,622.90			*1
2	Fuel		15.99	liter	38.05	608.33			
3	Foreman		0.14	day	2,784.71	389.86			*1
4	Skilled labor		0.40	day	985.20	394.08			*1
5	Labor		0.54	day	904.14	488.24			*1
6	Others					70.07			2% of the above
	Net cost					3,573.47			
						357.35	Rs/m^3		

Note: Concrete pump

*1 Operating hour 1.03 hour

*1 P274 Standard unit outputs, Ministry of Work, Japan

10 ASSEMBLING AND DISASSEMBLING CONCRETE PIPE WHEN L=60M PER ($10M^3$)

No.	Description	Specification	Quantity	Unit	Local Cost (Rs)		Foreign Cost (US$)		Remarks
					Rate	Amount	Rate	Amount	
1	Labor		0.34	manday	904.14	308.08			*1
	Net cost					308.08			
						30.81	Rs/m^3		

Note: L = 60.0 m

* P278 Standard unit outputs, Ministry of Work, Japan

11 PLACING OF CONCRETE BY MANUAL, H<2m R<15m (PER10 M^3)

No.	Description	Specification	Quantity	Unit	Local Cost (Rs)		Foreign Cost (US$)		Remarks
					Rate	Amount	Rate	Amount	
1	Foreman		0.57	day	2,784.71	1,587.28			*1
2	Skilled labor		0.79	day	985.20	778.31			*1
3	Labor		1.25	day	904.14	1,130.18			*1
4	Others					244.70			7% of the above
						3,740.47			
						374.05	Rs/m^3		

Note:

*1 P275 Standard unit outputs, Ministry of Work, Japan

12 PLACING OF CONCRETE BY CRANE, H=25m, R=20m (PER 10 M^3)

No.	Description	Specification	Quantity	Unit	Local Cost (Rs)		Foreign Cost (US$)		Remarks
					Rate	Amount	Rate	Amount	
1	Hiring cost of rough terrain crane, 35t		0.11	day	13,235.29	1,455.88			*1
2	Fuel		12.84	liter	38.05	488.59			
3	Mason		1.37	day	1,455.34	1,993.82			*1
4	Others					118.15			3% of the above
	Net cost					4,056.44			
						405.64	Rs/m^3		

Note:

*1 P13-6 Standard Output, JHA Japan

13 PLACING OF CONCRETE BY TOWER CRANE, (PER 10 M^3)

No.	Description	Specification	Quantity	Unit	Local Cost (Rs)		Foreign Cost (US$)		Remarks
					Rate	Amount	Rate	Amount	
1	Skilled labor		2.5	manday	985.20	2,463.00			*1
2	Scaffolding worker		0.13	manday	1,082.47	140.58			*1
3	Hiring cost of tower crane		10.0	m^3	1,388.71	13,887.06			
4	Preparatory work		1	LS		2,473.60			15% of the above
	Net cost					18,964.24			
						1,896.42	Rs/m^3		

Note: Hiring cost of tower crane per $1m^3$ of 0.0 day
Operating time 0.1 day

Hiring cost of tower crane per m^3 0.0 Rs/m^3

*1 P14-38 Standard Output, JHA Japan

14 PLACING OF CONCRETE BY TOWER CRANE + CONCRETE PUMP, (PER10 M^3)

No.	Description	Specification	Quantity	Unit	Local Cost (Rs)		Foreign Cost (US$)		Remarks
					Rate	Amount	Rate	Amount	
1	Skilled labor		2.5	manday	985.20	2,463.00			*1
2	Scaffolding worker		0.13	liter	1,082.47	140.58			*1
3	Tower crane operator		0.13	LS	1,730.94	224.80			
4	Concrete plant operator		0.11	manday	1,730.94	190.40			
5	Hiring cost of tower crane		10	m^3	1,388.71	13,887.06			
	Hiring cost of concrete pump		10	m^3	413.64	4,136.43			
	Fuel consumption		0.43	liter	38.05	16.49			
8	Piping		1	LS	308.08	308.08			
9	Others					3,205.03			15% of the above
	Net cost					24,571.87			
						2,457.19	Rs/m^3		

Note:

Hiring cost of concrete pump per 1m^3 of concrete	413.6	Rs
Fuel consumption of concrete pump	0.43	liter
Fuel consumption	1.3	liter/hour
	0.33	hour

*1 P14-38 Standard Output, JHA Japan

15 CURING OF CONCRETE (PER 10M^3)

No.	Description	Specification	Quantity	Unit	Local Cost (Rs)		Foreign Cost (US$)		Remarks
					Rate	Amount	Rate	Amount	
1	Labor		0.16	day	904.14	144.66			*1
2	Sundries					47.74			33% of the above
						192.40		0.00	
						19.24	Rs/m^3	0.00	US$/m^3

Note:

*1 P276 Standard unit outputs, Ministry of Work, Japan

401g PLACING OF LEAN CONCRETE BY MANUAL, (PER10M^3)

No.	Description	Specification	Quantity	Unit	Local Cost (Rs)		Foreign Cost (US$)		Remarks
					Rate	Amount	Rate	Amount	
1	Concrete		10.02	m^3	4,843.69	48,533.82			
2	Transportation		10.0	m^3	201.66	2,016.55			
3	Placing concrete by manual		10.0	m^3	374.05	3,740.47			
4	Curing		10.0	m^3	19.24	192.40			
	Net cost					54,483.25			
	Site-on-cost, overhead & profit	35.880%				19,548.59	Rs		
	Total					74,031.84	Rs		

Note:

Net cost

5,448.32 Rs/m^3

401b 2 CONCRETE CLASS A1, UNDERGROUND, (PER 10M^3)

No.	Description	Specification	Quantity	Unit	Local Cost (Rs)		Foreign Cost (US$)		Remarks
					Rate	Amount	Rate	Amount	
1	Concrete		10.02	m^3	5,212.38	52,228.03			
2	Transportation		10.0	m^3	201.66	2,016.55			
3	Placing concrete by manual		10.0	m^3	374.05	3,740.47			by chute
4	Curing		10.0	m^3	19.24	192.40			
	Net cost					58,177.46			
	Site-on-cost, overhead & profit	35.880%				20,874.07	Rs		
	Total					79,051.53	Rs		

Note:

Net cost

5,817.75 Rs/m^3

401a 1 CONCRETE CLASS A1, GROUND, (PER 10M^3)

No.	Description	Specification	Quantity	Unit	Local Cost (Rs)		Foreign Cost (US$)		Remarks
					Rate	Amount	Rate	Amount	
1	Concrete		10.02	m^3	5,212.38	52,228.03			
2	Transportation		10.0	m^3	201.66	2,016.55			
3	Placing concrete by pump		10.0	m^3	357.35	3,573.47			
4	Curing		10.0	m^3	19.24	192.40			
	Net cost					58,010.46			
	Site-on-cost, overhead & profit	35.880%				20,814.15	Rs		
	Total					78,824.61	Rs		

Note:

Net cost

5,801.05 Rs/m^3

401b 1 CONCRETE CLASS A1, ELEVATED, (PER 10M^3)

No.	Description	Specification	Quantities	Unit	Local (Rs)		Foreign (US$)		Remarks
					Rate	Amount	Rate	Amount	
1	Concrete		10.02	m^3	5212.38	52228.03			
2	Transportation		10.0	m^3	201.66	2016.55			
3	Placing concrete		10.0	m^3	357.35	3573.47			
4	Curing		10.0	m^3	19.24	192.40			
	Net cost					58,010.46			
	Site-on-cost, overhead & profit	35.880%				20,814.15	Rs		
	Total					78,824.61	Rs		

Note:

Net cost
5,801.05 Rs/m^3

401b 2 CONCRETE CLASS A1-2 FOR IN-SITU-PILE, (PER 10M^3)

No	Description	Specification	Quantities	Unit	Local (Rs)		Foreign (US$)		Remarks
					Rate	Amount	Rate	Amount	
1	Concrete		10.02	m^3	5,560.13	55,712.47			
2	Transportation		10.0	m^3	201.66	2,016.55			
3	Placing concrete from crane		10.0	m^3	405.6	4,056.4			
4	Curing		10.0	m^3	19.24	192.40			
	Net cost					61,977.86			
	Site-on-cost, overhead & profit	35.880%				22,237.66	Rs		
	Total					84,215.51	Rs		

Note:

Net cost
6,197.79 Rs/m^3

CONCRETE CLASS A2-3 FOR PIER OF NALUCHI BR. (PER 10M^3) UPTO H < 25M **Pier (elevated)**

	Description	Specification	Quantities	Unit	Local (Rs)		Foreign (US$)		Remarks
					Rate	Amount	Rate	Amount	
1	Concrete		10.02	m^3	5,718.97	57,304.11			
2	Transportation		10.0	m^3	201.66	2,016.55			
3	Placing concrete pump		10.0	m^3	357.35	3,573.47			
4	Curing		10.0	m^3	19.24	192.40			
	Net cost					63,086.53			
	Site-on-cost, overhead & profit	35.880%				22,635.45	Rs		
	Total					85,721.98	Rs		

Note:

Net cost
6,308.65 Rs/m^3

401c3 **CONCRETE CLASS A2-3 FOR PIER OF NALUCHI BR. (PER 10m^3) UPTO H > 25M** **P3 Pier**

No	Description	Specification	Quantities	Unit	Local (Rs)		Foreign (US$)		Remarks
					Rate	Amount	Rate	Amount	
1	Concrete		10.0	m^3	5,718.97	57,189.73			
2	Transportation		10.0	m^3	201.66	2,016.55			
3	Placing concrete by tower crane		10.0	m^3	1,388.71	13,887.06			
4	Curing		10.0	m^3	19.24	192.40			
	Net cost					73,285.75			
	Site-on-cost, overhead & profit	35.880%				26,294.93	Rs		
	Total					99,580.67	Rs		

Note:

Net cost
7,328.57 Rs/m^3

401d CONCRETE CLASS A3 FOR TOWER OF NALUCHI BR. (PER 10M^3)

	Description	Specification	Quantities	Unit	Local (Rs)		Foreign (US$)		Remarks
					Rate	Amount	Rate	Amount	
1	Concrete		10.02	m^3	6,129.58	61,418.35			
2	Transportation		10.0	m^3	201.66	2,016.55			
3	Placing concrete by tower crane		10.0	m^3	1,388.71	13,887.06			
4	Curing		10.0	m^3	19.24	192.40			
	Net cost					77,514.37			
	Site-on-cost, overhead & profit	35.880%				27,812.15	Rs		
	Total					105,326.52	Rs		

Note:

Net cost

7,751.44 Rs/m^3

CONCRETE CLASS D2-2 FOR PC BOX GIRDER OF NALUCHI BR. (PER 10M^3), Ordinary Portland Cement **Naluchi Br.**

No	Description	Specification	Quantities	Unit	Local (Rs)		Foreign (US$)		Remarks
					Rate	Amount	Rate	Amount	
1	Concrete		10.02	m^3	6,152.46	61,647.68			
2	Transportation		10.0	m^3	201.66	2,016.55			
3	Placing concrete by tower crane		10.0	m^3	2,457.19	24,571.87			
4	Curing		10.0	m^3	19.24	192.40			
	Net cost					88,428.50			
	Site-on-cost, overhead & profit	35.880%				31,728.15	Rs		
	Total					120,156.65	Rs		

Note:

Net cost

8,842.85 Rs/m^3

401f 2 CONCRETE CLASS D2-2 FOR PC BOX GIRDER OF NALUCHI BR. (PER 10M^3), HIGH-EARLY-STRENGTH PORTLAND CEMENT

No	Description	Specification	Quantities	Unit	Local (Rs)		Foreign (US$)		Remarks
					Rate	Amount	Rate	Amount	
1	Concrete		10.02	m^3	12,589.33	126,145.09			
2	Transportation		10.0	m^3	201.66	2,016.55			
3	Cost of tower crane		10.0	m^3	1,388.71	13,887.06			
4	Curing		10.0	m^3	19.24	192.40			
	Net cost					142,241.11			
	Site-on-cost, overhead & profit	35.880%				51,036.11	Rs		
	Total					193,277.22	Rs		

Note:

Net cost

14,224.11 Rs/m^3

401e CONCRETE CLASS D1 FOR PC SLAB OF APPROACH BR. (PER 10M^3)

Approach Br.

No	Description	Specification	Quantities	Unit	Local (Rs)		Foreign (US$)		Remarks
					Rate	Amount	Rate	Amount	
1	Concrete		10.02	m^3	6,003.94	60,159.48			
2	Transportation		10.0	m^3	201.66	2,016.55			
3	Placing concrete by concrete pump		10.0	m^3	357.35	3,573.47			
4	Curing		10.0	m^3	19.24	192.40			
	Net cost					65,941.90			
	Site-on-cost, overhead & profit	35.880%				23,659.95	Rs		
	Total					89,601.86	Rs		

Note:

Net cost
6,594.19 Rs/m^3

401e CONCRETE CLASS D1 FOR PC BOX GIRDER , (PER 10M^3)

Viaduct

No	Description	Specification	Quantities	Unit	Local (Rs)		Foreign (US$)		Remarks
					Rate	Amount	Rate	Amount	
1	Concrete		10.02	m^3	6,003.94	60,159.48			
2	Transportation		10.0	m^3	201.66	2,016.55			
3	Placing concrete by concrete pump		10.0	m^3	357.35	3,573.47			
4	Curing		10.0	m^3	19.24	192.40			
	Net cost					65,941.90			
	Site-on-cost, overhead & profit	35.880%				23,659.95	Rs		
	Total					89,601.86	Rs		

Note:

Net cost
6,594.19 Rs/m^3

404b REINFORCEMENT, NOMINAL SIZE, 13-32MM (PER TON) FOR HOLLOW SLAB

Approach Br.

No.	Description	Specification	Quantities	Unit	Local (Rs)		Foreign (US$)		Remarks
					Rate	Amount	Rate	Amount	
1	Foreman		0.6	manday	2,784.71	1,670.82			*1
2	Steel fixer		3.9	〃	1,455.34	5,675.83			*1
3	Scaffolding worker		0.1	〃	1,082.47	108.25			*1
4	Labor		2.2	〃	904.14	1,989.11			*1
5	Reinforcing bar	D13-D32	1.05	ton	50,800.00	53,340.00			*2
6	Rough terrain crane		0.1	day	2,335.64	233.56			*1
7	Fuel		11.67	liter	38.05	444.17			
8	Others (cutter, bending machine, etc.)					188.88			2% of labor cost
	Net cost					63,650.63			
	Site-on-cost, overhead & profit	35.880%				22,837.85	Rs		
	Total					86,488.48	Rs		

Note: Average working capacity per day 2.1 t/day

Net cost
63,650.63 Rs/ton

*2 P22 Standard unit outputs, JICA
*1 P871 Standard unit outputs, Ministry of Work, Japan

404 b **REINFORCEMENT, NOMINAL SIZE, 13-32MM (PER TON) FOR BOX GIRDER**

Naluchi Br. PC box girder

No.	Description	Specification	Quantities	Unit	Local (Rs)		Foreign (US$)		Remarks
					Rate	Amount	Rate	Amount	
1	Foreman		0.5	manday	2,784.71	1,392.35			*1
2	Steel fixer		3.4	〃	1,455.34	4,948.16			*1
3	Labor		1.9	〃	904.14	1,717.87			*1
4	Reinforcing bar	D13-D32	1.05	ton	50,800.00	53,340.00			*2
5	Cost of tower crane		1	ton	1,388.71	1,388.71			
6	Fuel		7.93	liter	38.05	301.74			
7	Others (cutter, bending machine, etc.)					161.17			2% of labor cost
	Net cost					63,250.00			
	Site-on-cost, overhead & profit	35.880%				22,694.10	Rs		
	Total					85,944.10	Rs		

Note: Operating time 0.2 days

Net cost 63,250.00 Rs/ton

*1 P901 Standard unit outputs, Ministry of Work, Japan

*2 P22 Standard unit outputs, JICA

404 b REINFORCEMENT, NOMINAL SIZE, 13-32MM (PER TON) BOX GIRDER

Viaduct

No.	Description	Specification	Quantities	Unit	Local (Rs)		Foreign (US$)		Remarks
					Rate	Amount	Rate	Amount	
1	Foreman		0.5	manday	2,784.71	1,392.35			*1
2	Steel fixer		4.5	〃	1,455.34	6,549.04			*1
3	Scaffolding worker		0.1	〃	1,082.47	108.25			*1
4	Labor		2.6	〃	904.14	2,350.77			*1
5	Reinforcing bar	D13-D32	1.05	ton	50,800.00	53,340.00			*2
6	Others (cutter, bending machine, etc.)					728.03			7% of labor cost
7									
	Net cost					64,468.44			
	Site-on-cost, overhead & profit	35.880%				23,131.28	Rs		
	Total					87,599.71	Rs		

Note: Average working capacity per day 2.2 t/day

Net cost
64,468.44 Rs/ton

*1 P876 Standard unit outputs, Ministry of Work, Japan
*2 P22 Standard unit outputs, JICA

404 b **REINFORCEMENT, NOMINAL SIZE 13-32MM (PER TON) FOR PIER OF NALUCHI BR.** **Naluchi pier**

No.	Description	Specification	Quantities	Unit	Local (Rs)		Foreign (US$)		Remarks
					Rate	Amount	Rate	Amount	
1	Foreman		0.5	manday	2,784.71	1,392.35			*2
2	Steel fixer		4.8	manday	1,455.34	6,985.64			*1
3	Reinforcing bar	D13-D32	1.01	ton	50,800.00	51,308.00			*1
4	Hiring charge of tower crane		1	ton	1,388.71	1,388.71			
5	Fuel		3.97	liter	38.05	150.87			
6	Sundries (Cutter, bending machine, etc.)					1,193.72			2% of labor cost
	Net cost					62,419.29			
	Site-on-cost, overhead & profit	35.880%				22,396.04	Rs		
	Total					84,815.33	Rs		

Note: Operating time 0.1 day

Net cost
62,419.29 Rs/ton

*1 P13-33 Standard Output, JHA Japan
*2 P22 Standard unit outputs, JICA

404b REINFORCEMENT, NOMINAL SIZE, 13-32MM (PER TON)

Small span bridges, boxes

No.	Description	Specification	Quantities	Unit	Local (Rs)		Foreign (US$)		Remarks
					Rate	Amount	Rate	Amount	
1	Foreman		0.5	manday	2,784.71	1,392.35			*1
2	Steel fixer		4.8	〃	1,455.34	6,985.64			*1
3	Labor		3.8	〃	904.14	3,435.74			*1
4	Reinforcing bar	D13-D32	1.01	ton	50,800.00	51,308.00			*2
5	Rough terrain crane		0.1	day	2,335.64	233.56			*1
6	Fuel		11.67	liter	38.05	444.17			
7	Sundries (Cutter, bending machine, etc.)					236.27			2% of labor cost
	Net cost					64,035.74			
	Site-on-cost, overhead & profit	35.880%				22,976.02	Rs		
	Total					87,011.77	Rs		

Note:

Net cost
64,035.74 Rs/ton

*1 P22 Standard unit outputs, JICA

32 COST OF TOWER CRANE

No.	Description	Specification	Quantities	Unit	Local (Rs)		Foreign (US$)		Remarks
					Rate	Amount	Rate	Amount	
1	Hiring charge of tower crane		1	LS	6,756,361.95	6,756,361.95			32-1
2	Assembling and dismantling tower crane		1	LS	1,433,661.70	1,433,661.70			32-2
3	Foundation		1	LS	81,267	81,267			32-3
4	Operation cost		1	LS	493,394	493,394			32-4
5	Maintenance cost		1	LS	128,070.11	128,070.11			32-5
	Net cost					8,892,755.43	Rs		
	Site-on-cost, overhead & profit	35.880%				3,190,720.65	Rs		
	Total					###########	Rs		

32-1 HIRING CHARGE OF TOWER CRANE

No.	Description	Specification	Quantities	Unit	Local (Rs)		Foreign (US$)		Remarks
					Rate	Amount	Rate	Amount	
1	Hiring charge of crane	26kW	317.80	day	16,146.96	5,131,505.25			B+7+(H+6)/15 x2
2	Hiring charge of tower	75m	158.90	〃	10,225.65	1,624,856.49			(B+7)/2+(H+6)/15
3	Equipment for maintenance					0.22			1.8% of crane and tower cost
	Net cost					6,756,361.95	Rs		

Capacity of tower crane	60	t/m
Hiring period, B=	300	days
Height of tower crane, H=	75	m
Weight of crane	32	t
Weight of tower, 75m	37.5	t
Hiring charge of crane per day	16,146.96	Rs
Hiring charge of tower per day	10,225.65	Rs
Fuel consumption of crane	0.305	liter/kW-h
Average operating hour per day	3	hour
Out put	26	kw
Fuel per day	24	L/day

P04-13 Hiring Charge of Construction Equipments, Japan Machinery Association
P755 Manual for Erection of Bridges, Japan Machinery Association
P13-34 Standard Output, JHA Japan

The cost represent the net cost to the contractor of executing the work on site, not the prices which would be entered in a tender Bill of Quantities.

32-2 ASSEMBLING AND DISMANTLING TOWER CRANE

No.	Description	Specification	Quantities	Unit	Local (Rs)		Foreign (US$)		Remarks
					Rate	Amount	Rate	Amount	
	Tool		17.38	day	30,000.00	521,250.00			
	Bridge foreman		17.38	manday	6,169.41	107,193.53			
	Bridge worker		104.25	manday	4,627.06	482,370.88			
	Labor		17.38	manday	904.14	15,709.46			
	Rough terrain crane		17.38	day	13,235.29	229,963.24			
	Fuel		2,028.24	liter	38.05	77,174.60			
	Net cost					1,433,661.70	Rs		

Assembling and disassembling:
0.25 x W +0.125 x H = 17.375
W =32t
H = 75m

P755 Manual for Erection of Bridges, Japan Machinery Association
P13-34 Standard Output, JHA Japan

32-3 FOUNDATION

No.	Description	Specification	Quantities	Unit	Local (Rs)		Foreign (US$)		Remarks
					Rate	Amount	Rate	Amount	
	Granular base		5.00	m^3	0.00	0.00			
	Lean concrete		2.50	m^3	5,448.32	13,620.81			
	Reinforcing bar		0.38	ton	64,035.74	24,013.40			
	Concrete Class A1	Underground	7.50	m^3	5,817.75	43,633.09			
	Net cost					81,267.31			

Foundation: 5m x 5m x 0.3m

P755 Manual for Erection of Bridges, Japan Machinery Association
P13-34 Standard Output, JHA Japan

32-4 OPERATION COST

No.	Description	Specification	Quantities	Unit	Local (Rs)		Foreign (US$)		Remarks
					Rate	Amount	Rate	Amount	
1	Fuel		12,967	liter	38.05	493,394.35			
2	Operator		213.3	manday	1,730.94	369,210.01			
	Net cost					493,394.35	Rs		

Operation hours: 6.9h/day x 300days x 0.79 x 26kw x 0.305 liter-kw/h

12,967.93 liter

Operator: 0.15人/hour x 6hours x 300days x0.79

213.3 manday

P755 Manual for Erection of Bridges, Japan Machinery Association
P13-34 Standard Output, JHA Japan

32-5 MAINTENANCE COST

No.	Description	Specification	Quantities	Unit	Local (Rs)		Foreign (US$)		Remarks
					Rate	Amount	Rate	Amount	
1	Mechanic	6 x 10 months	60	manday	1,455.34	87,320.53			
2	Electrician	2 x 10 months	20	〃	1,455.34	29,106.84			
3	Sundries					11,642.74			10% of the above
	Net cost					128,070.11	Rs		

P755 Manual for Erection of Bridges, Japan Machinery Association
P13-34 Standard Output, JHA Japan

33 COST OF ELEVATOR

No.	Description	Specification	Quantities	Unit	Local (Rs)		Foreign (US$)		Remarks
					Rate	Amount	Rate	Amount	
1	Hiring charge of elevator		1	LS	585,582.11	585,582.11			33-1
2	Assembling and dismantling elevator		1	LS	487,772.45	487,772.45			33-2
3	Foundation		1	LS	65,013.85	65,013.85			33-3
4	Operation cost		1	LS	320,173.68	320,173.68			33-4
5	Maintenance cost		1	LS	222,922.03	222,922.03			33-5
	Net cost					1,681,464.11			
	Site-on-cost, overhead & profit	35.880%				603,309.32	Rs		
	Total					2,284,773.43	Rs		

33−1 HIRING CHARGE OF ELEVATOR

No.	Description	Specification	Quantities	Unit	Local (Rs)		Foreign (US$)		Remarks
					Rate	Amount	Rate	Amount	
1	Hiring charge of elevator	1.0t	300.00	day	688.40	206,521.07			
2	Hiring charge of guide rail	52m	300.00	〃	556.65	166,993.62			
3	Hiring charge of motor winch	7kW	300.00	〃	672.03	201,609.00			
4	Equipment					10,458.41			2.8% of elevator and guide rail cost
	Net cost					585,582.11	Rs		

Capacity of elevator	1.0	t
Hiring period	300	days
Height of elevator	52	m
Weight of elevator	0.60	t
Weight of guide rail, 50m	5.00	t
Weight of motor winch	0.40	t
Hiring charge of elevator per day	688.40	Rs
Hiring charge of guide rail per day	556.65	Rs
Hiring charge of motor winch	672.03	Rs

P04-19 Hiring charge of construction equipments, Japan Machinery Association
P753 Manual for Erection of Bridges, Japan Machinery Association
P13-34 Standard Output, JHA Japan

33-2 ASSEMBLING AND DISMANTLING ELEVATOR

No.	Description	Specification	Quantities	Unit	Local (Rs)		Foreign (US$)		Remarks
					Rate	Amount	Rate	Amount	
	Tool*1		10.80	day	30,000.00	324,000.00			
	Scaffolding worker*2		64.80	manday	1,082.47	70,144.14			
	Welder*3		10.80	〃	1,455.34	15,717.70			
	Electrician*4		3.24	〃	1,455.34	4,715.31			
	Rough terrain crane*5		10.80	day	2,335.64	25,224.91			
	Fuel		1,260.72	liter	38.05	47,970.40			
	Net cost					487,772.45	Rs		

Assembling and disassembling:

0.15 × H + 3 = 10.8 days

H = 52 m

*1 1×10.8
*2 6×10.8
*3 1×10.8
*4 0.3×10.8
*5 1×10.8

P04-19 Hiring Charge of Construction Equipments, Japan Machinery Association
P753 Manual for Erection of Bridges, Japan Machinery Association

33-3 FOUNDATION

No.	Description	Specification	Quantities	Unit	Local (Rs)		Foreign (US$)		Remarks
					Rate	Amount	Rate	Amount	
	Granular base		0	m^3	1	0			
	Lean concrete		2.00	m^3	5,448.3	10,896.6			
	Reinforcing bar		0.30	ton	64,035.7	19,210.7			
	Concrete Class A1	Underground	6.00	m^3	5,817.7	34,906.5			
	Net cost					65,013.8			

Foundation: 4m x 5m x 0.3m

33−4 OPERATION COST

No.	Description	Specification	Quantities	Unit	Local (Rs)		Foreign (US$)		Remarks
					Rate	Amount	Rate	Amount	
1	Fuel		2,783	liter	38.05	105,892.10			
2	Operator (Labor)		237	manday	904.14	214,281.57			
	Net cost					320,173.68	Rs		

Fuel consumption: 2.3 liter/h
300 day × 0.79 × 5hour × 2.1litre/hour = 2,783 liter

Operator (Labor)
300 day × 0.79 = 237 days

33−5 MAINTENANCE COST

No.	Description	Specification	Quantities	Unit	Local (Rs)		Foreign (US$)		Remarks
					Rate	Amount	Rate	Amount	
1	Mechanic *1		60	manday	1,455.34	87,320.53			
2	Electrician *2		79.25	〃	1,455.34	115,335.86			
3	Sundries					20,265.64			10% of the above
	Net cost					222,922.03	Rs		

*1 6 × 300/30

*2 2 × 300/30 + 0.25 × 300 × 0.79

SP40
3b1

FORMWORK TYPE B1 (FOR OUTSIDE OF PC HOLLOW SLAB)

Approach Br.

No.	Description	Specification	Quantities	Unit	Local (Rs)		Foreign (US$)		Remarks
					Rate	Amount	Rate	Amount	
1	Installation and dismantling formwork for bottom & external wall of PC hollow slab		803.2	m^2	940.98	755,797.79			34-1
2	Installation and dismantling formwork for cantilever slab of PC hollow slab		174.0	m^2	1,158.22	201,530.28			34-2
3	Installation and dismantling formwork of girder end of PC hollow slab		34.4	m^2	1,421.51	48,900.07			34-3
			1,011.6						
	Net cost					1,006,228.15			
	Site-on-cost, overhead & profit	35.880%				361,034.66	Rs		
	Total					1,367,262.80	Rs		

Net cost
994.69 Rs/m^2

34-1 **INSTALLATION AND DISMANTLING FORMWORK FOR BOTTOM & EXTERNAL WALL OF PC HOLLOW SLAB PER 10M^2**

Approach Br.

No.	Description	Specification	Quantities	Unit	Local (Rs)		Foreign (US$)		Remarks
					Rate	Amount	Rate	Amount	
1	Steel formwork, Plane		10.0	m^2	580.00	5,799.98			
2	Skilled labor		1.7	manday	985.20	1,674.84			
3	Welder		0.05	manday	1,455.34	72.77			
4	Rough terrain crane	35t	0.08	day	13,235.29	1,058.82			
5	Fuel		9.34	liter	38.05	355.34			
6	Others					448.09			5% of the above
	Net cost					9,409.83			
						940.98	Rs/m^2		
			Local Cost (Rs)			Foreign Cost (US$)			

Note:

Cost per m^2 580.00 Rs/m^2

P13-14 Standard Output, JHA Japan

34-2 INSTALLATION AND DISMANTLING FORMWORK FOR CANTILEVER SLAB OF PC HOLLOW SLAB PER $10M^2$

Approach Br.

No.	Description	Specification	Quantities	Unit	Local (Rs)		Foreign (US$)		Remarks
					Rate	Amount	Rate	Amount	
1	Steel formwork, flat		10.0	m^2	580.00	5,799.98			
2	Skilled labor		3.8	manday	985.20	3,743.76			
3	Welder		0.05	manday	1,455.34	72.77			
4	Rough terrain crane	35t	0.08	day	13,235.29	1,058.82			
5	Fuel		9.34	liter	38.05	355.34			
6	Others					551.53			5% of the above
	Net cost					11,582.20			
						1,158.22	Rs/m^2		
			Local Cost (Rs)			Foreign Cost (US$)			

Note: **Cost per m^2** 580.00 Rs/m^2

P13-14 Standard Output, JHA Japan

34-3 INSTALLATION AND DISMANTLING FORMWORK FOR GIRDER END OF PC HOLLOW SLAB (PER 10M^2) Approach Br.

No.	Description	Specification	Quantities	Unit	Local (Rs)		Foreign (US$)		Remarks
					Rate	Amount	Rate	Amount	
1	Plywood	1.2x90x180 cm	7	Sheet	1,000.00	7,172.84			10/(0.9x1.8) + 1
2	Timber	5x7.5x400cm	10	nr	308.33	3,083.33			
3	Carpenter		1.8	manday	1,455.34	2,619.62			
4	Rough terrain crane	35t	0.06	day	13,235.29	794.12			
5	Fuel		7.00	liter	38.05	266.50			
6	**Others**					278.73			2% of the above
	Net cost					14,215.14			
						1,421.51	Rs/m^2		
			Local Cost (Rs)			Foreign Cost (US$)			

Note:

P13-14 Standard Output, JHA Japan

SP40
3b2

FORMWORK TYPE B2 FOR INSIDE OF PC HOLLOW SLAB (PER 10M^2)

Approach Br.

No.	Description	Specification	Quantities	Unit	Local (Rs)		Foreign (US$)		Remarks
					Rate	Amount	Rate	Amount	
1	Plywood	1.2x90x180 cm	7	Sheet	1,000.00	7,172.84			10/(0.9x1.8) + 1
2	Timber	5x7.5x400cm	15	nr	308.33	4,625.00			
3	Carpenter		2.2	manday	1,455.34	3,201.75			
4	Rough terrain crane	35t	0.06	day	13,235.29	794.12			
5	Fuel		7.00	liter	38.05	266.50			
6	**Others**					321.20			2% of the above
	Net cost					16,381.42			
	Site-on-cost, overhead & profit	35.880%				5,877.65	Rs		
	Total					22,259.07	Rs		

Note:

Net cost

1,638.14 Rs/m^2

P13-16 Standard Output, JHA Japan

SP40
3a3

FORMWORK TYPE A FOR ALL SUBSTRUCTURE

No.	Description	Specification	Quantities	Unit	Local (Rs)		Foreign (US$)		Remarks
					Rate	Amount	Rate	Amount	
1	Steel formwork, Plane		10.0	m^2	580.00	5,799.98			
2	Skilled labor		2.0	manday	985.20	1,970.40			
3	Welder		0.05	manday	1,455.34	72.77			
4	Rough terrain crane	35t	0.24	day	13,235.29	3,176.47			
5	Fuel		28.02	liter	38.05	1,066.01			
6	Others					604.28			5% of the above
	Net cost					12,689.91			
	Site-on-cost, overhead & profit	35.880%				4,553.14	Rs		
	Total					17,243.05	Rs		
			Local Cost (Rs)			Foreign Cost (US$)			

Note: **A1, P1, P2, P4, P5, P6, P7, A2**

Net cost
1,268.99 Rs/m^2

Cost per m^2 580.00 Rs/m^2

P13-13 Standard Output, JHA Japan

SP40 3b3 FORMWORK TYPE C1 (FOR EXTERNAL OF PIER 3) PER100 M^2

No.	Description	Specification	Quantities	Unit	Local (Rs)		Foreign (US$)		Remarks
					Rate	Amount	Rate	Amount	
1	Steel form		100	m^2	200.39	20,038.90			
2	Skilled labor (Assembling & dismantling)		22	manday	985.20	21,674.41			
3	Rough terrain crane	35t	2.64	day	13,235.29	34,941.18			
4	Fuel		308.18	liter	38.05	11,726.10			
5	Others					601.17			3% of steel form
	Net cost					88,981.76			
						889.82	Rs/m^2		

Rate of depreciation of steel form. 20% of residua value will be assumed.

$$\left(\frac{(1-0.20)}{1,783.8}\right) = 0.00045 \text{ per } m^2$$

Average form area required per one lift, A =

150.71 m^2

Manufacture cost, 1976.5Rs/m^2 x 150.71

446,817 Rs Use only for P3

Total formwork area 1,783.8 m^2

Cost of form

446,817 × 0.00045= 200.39 Rs/m^2

P13-13 Standard Output, JHA Japan

SP40
3b4

FORMWORK TYPE C2 (FOR INTERNAL OF PIER 3 (PER 100 M^2)

Naluchi Bridge

No.	Description	Specification	Quantities	Unit	Local (Rs)		Foreign (US$)		Remarks
					Rate	Amount	Rate	Amount	
1	Steel form		100	m^2	212.03	21,203.39			
2	Skilled labor (Assembling & dismantling)		22	manday	985.20	21,674.41			
3	Rough terrain crane	35t	2.64	day	13,235.29	34,941.18			
4	Fuel		308.18	liter	38.05	11,726.10			
5	Others					636.10			3% of steel form
	Net cost					90,181.18			
						901.81	Rs/m^2		

Rate of depreciation of steel form. 20% of residua value will be assumed.

$$\left(\frac{(1-0.20)}{849.60}\right) = 0.00094 \text{ per } m^2$$

Average form area required per one lift, A =

120 m^2

Manufacture cost, 1876.5 Rs/m^2 x1.0x A

225,180 Rs Use only for P3

Total formwork area 849.6 m^2

Cost of form

225,180 × 0.00094= 212.03 Rs/m^2

SP40
3b5

FORMWORK TYPE C3 (FOR PIER TABLE OF PC BOX GIRDER) PER 10M^2 WOODEN FORMWORK

Naluchi Br.

No.	Description	Specification	Quantities	Unit	Local (Rs)		Foreign (US$)		Remarks
					Rate	Amount	Rate	Amount	
1	Foreman		0.4	manday	2,784.71	1,113.88			
2	Carpenter		3.2	manday	1,455.34	4,657.09			
3	Labor		1.6	manday	904.14	1,446.63			
4	Tower crane		10	m^2	1,388.71	13,887.06			
5	Plywood, 12×900×1800		6.17	each	1,000.00	6,172.84			
6	Timber, 50×75×4000		10.0	each	308	3,083.33			
7	**Others**		1	LS		360.88			5% of labor cost
	Net cost					30,721.72			
	Site-on-cost, overhead & profit	35.880%				11,022.95	Rs		
	Total					41,744.68	Rs		

Note:

Net cost
3,072.17 Rs/m^2

* P892 Standard unit outputs, Ministry of Work, Japan

SP40
3b6

FORMWORK TYPE C4 (FOR GIRDER END BLOCK OF PC BOX GIRDER) PER 10M^2 WOODEN FORMWORK Naluchi Br.

No.	Description	Specification	Quantities	Unit	Local (Rs)		Foreign (US$)		Remarks
					Rate	Amount	Rate	Amount	
1	Foreman		0.4	manday	2,784.71	1,113.88			
2	Carpenter		3.2	manday	1,455.34	4,657.09			
3	Labor		1.6	manday	904.14	1,446.63			
4	Tower crane		10	m^2	1,388.71	13,887.06			
5	Plywood, 12×900×1800		6.17	each	1,000.00	6,172.84			
6	Timber, 50×75×4000		10.0	each	308	3,083.33			
7	**Others**		1	LS		360.88			5% of labor cost
	Net cost					30,721.72			
	Site-on-cost, overhead & profit	35.880%				11,022.95	Rs		
	Total					41,744.68	Rs		

Note:

Net cost
3,072.17 Rs/m^2

* P892 Standard unit outputs, Ministry of Work, Japan

SP40
3b7

FORMWORK TYPE C5 (FOR PYLON OF PC BOX GIRDER (PER 100M^2)

Naluchi Br.

No.	Description	Specification	Quantities	Unit	Local (Rs)		Foreign (US$)		Remarks
					Rate	Amount	Rate	Amount	
1	Steel form		100	m^2	318.74	31,874.02			
2	Skilled labor (Assembling & dismantling)		22	manday	985.20	21,674.41			
3	Tower crane		100	m^2	1,388.71	138,870.65			
4	Others					956.22			3% of steel form
	Net cost					193,375.29			
						1,933.75	Rs/m^2		

Rate of depreciation of steel form. 20% of residua value will be assumed.

$$\left(\frac{(1-0.20)}{522.90}\right) = 0.00153 \text{ per m}^2$$

Average form area required per one lift, A =

74.016 m^2

Manufacture cost, 1876.5 Rs/m^2 x1.5 x A

208,337 Rs Use only for pylon

Total formwork area 522.9 m^2

Cost of form

208,337 × 0.00153= 318.74 Rs/m^2

* P892 Standard unit outputs, Ministry of Work, Japan

SP40
3b8

FORMWORK TYPE D1 (FOR OUTSIDE PC BOX GIRDER)

Viaduct

No.	Description	Specification	Quantities	Unit	Local (Rs)		Foreign (US$)		Remarks
					Rate	Amount	Rate	Amount	
1	Installation and dismantling external wall including fabrication of wooden formwork		763.6	m^2	2,354.08	1,797,630.93			42-1
2	Installation and dismantling bottom formwork including fabrication of steel formwork		800.2	m^2	971.21	777,160.49			42-2
3	Installation and dismantling cantilever slab formwork including fabrication of wooden formwork		1,023.3	m^2	1,865.08	1,908,490.33			42-3
			2,587.1						
	Net cost					4,483,281.75			
	Site-on-cost, overhead & profit	35.880%				1,608,601.49	Rs		
	Total					2,354.72	Rs/m^2		

Note:

Net cost

1732.9372 Rs/m^2

P13-13 Standard Output, JHA Japan

42-1 INSTALLATION AND DISMANTLING EXTERNAL WALL OF PC BOX GIRDER INCLUDING FABRICATION OF WOODEN FORMWORK, (PER 10M^2)

Viaduct

No.	Description	Specification	Quantities	Unit	Local (Rs)		Foreign (US$)		Remarks
					Rate	Amount	Rate	Amount	
1	Carpenter		7.9	manday	1,455.34	11,497.20			
2	Rough terrain crane	35t	0.1	day	13,235.29	1,323.53			
3	Fuel		11.67	liter	38.05	444.17			
4	Plywood, 12×900×1800		6.17	each	1072.06	6,617.66			Imported
5	Timber, 50×75×4000		10.0	each	308.33	3,083.33			
6	**Others**		1	LS		574.86			5% of labor cost
	Net cost					23,540.76			
						2,354.08	Rs/m^2		
			Local Cost (Rs)			Foreign Cost (US$)			

Note:

P13-14 Standard Output, JHA Japan

42-2 INSTALLATION AND DISMANTLING BOTTOM FORM INCLUDING FABRICATION OF STEEL FORMWORK (PER 10M^2)

Viaduct

No.	Description	Specification	Quantities	Unit	Local (Rs)		Foreign (US$)		Remarks
					Rate	Amount	Rate	Amount	
1	Steel form		10	m^2	580.00	5,799.98			
2	Skilled labor (Assembling & dismantling)		2	manday	985.20	1,970.40			
3	Rough terrain crane	35t	0.1	day	13,235.29	1,323.53			
4	Fuel		11.67	liter	38.05	444.17			
5	Others					174.00			3% of steel form
	Net cost					9,712.08			
						971.21	Rs/m^2		

Cost per m^2 580.00 Rs/m^2

P13-14 Standard Output, JHA Japan

42-3 INSTALLATION AND DISMANTLING CANTILEVER SLAB FORMWORK INCLUDING FABRICATION OF WOODEN FORMWORK (PER 10M^2)

Viaduct

No.	Description	Specification	Quantities	Unit	Local (Rs)		Foreign (US$)		Remarks
					Rate	Amount	Rate	Amount	
1	Carpenter		4.7	manday	1,455.34	6,840.11			
2	Rough terrain crane	35t	0.1	day	13,235.29	1,323.53			
3	Fuel		11.67	liter	38.05	444.17			
4	Plywood, 12×900×1800		6.17	each	1072.06	6,617.66			Imported
5	Timber, 50×75×4000		10.0	each	308.33	3,083.33			
6	**Others**		1	LS		342.01			5% of labor cost
	Net cost					18,650.81			
						1,865.08	Rs/m^2		
			Local Cost (Rs)			Foreign Cost (US$)			

Note:

P13-14 Standard Output, JHA Japan

SP4 03b9 **FORMWORK TYPE D2 (FOR INSIDE OF PC BOX GIRDER) PER 10M^2** Viaduct

No.	Description	Specification	Quantities	Unit	Local (Rs)		Foreign (US$)		Remarks
					Rate	Amount	Rate	Amount	
1	Carpenter		7.9	manday	1,455.34	11,497.20			
2	Rough terrain crane	35t	0.1	day	13,235.29	1,323.53			
3	Fuel		11.67	liter	38.05	444.17			
4	Plywood, 12×900×1800		6.17	each	1000.00	6,172.84			
5	Timber, 50×75×4000		10.0	each	308.33	3,083.33			
6	**Others**		1	LS		574.86			5% of labor cost
	Net cost					23,095.94			
	Site-on-cost, overhead & profit	35.880%				8,286.82	Rs		
	Total					3,138.28	Rs/m^2		

Note:

Net cost

2,309.59 Rs/m^2

P13-14 Standard Output, JHA Japan

SP40 2a1 **SUPPORTING TYPE A (FOR PC BOX HOLLOW SLAB ON EAST SIDE APPROACH VIADUCT)** Approach Br.

No.	Description	Specification	Quantities	Unit	Local (Rs)		Foreign (US$)		Remarks
					Rate	Amount	Rate	Amount	
	Installation and dismantling steel		929.1	m^2	2,070.02	1,923,255.31			
	Installation and dismantling frame support		2,787.30	m^3	318.31	887,228.13			
	Net cost					2,810,483.44			
	Site-on-cost, overhead & profit	35.880%				1,008,401.46	Rs		
	Total					3,818,884.89	Rs		
	Profit								

Note:

L=	57.0	m			
H=	3.0	m			
W=	13.9	m			
V=(W+2.4)×H×L=	2,787.30	m3			
Area = (W+2.4)×L	929.1	m2	Cost		
L=	57	m	(1-0.5)*60000 =	30,000.00	Rs/ton
Sheet pile required	56.7	t	100 days		

SP40 2a5 **SUPPORTING TYPE E1 (FOR P1 PIER HEAD ON EAST SIDE APPROACH VIADUCT)** Approach Br.

No.	Description	Specification	Quantities	Unit	Local (Rs)		Foreign (US$)		Remarks
					Rate	Amount	Rate	Amount	
	Installation and dismantling steel		38.22	m^2	2,070.02	79,116.15			
	Installation and dismantling frame support		33.75	m^3	318.31	10,742.99			
	Net cost					89,859.15			
	Site-on-cost, overhead & profit	35.880%				32,241.46	Rs		
	Total					122,100.61	Rs		

Note:

SP40
2b4

SCAFFOLDING TYPE C (FOR A1 AND P1 PIER ON EAST SIDE APPROACH VIADUCT)

Approach Br.

No.	Description	Specification	Quantities	Unit	Local (Rs)		Foreign (US$)		Remarks
					Rate	Amount	Rate	Amount	
1	Hiring charge of scaffolding	Flame type	58,848	m^2·day	1.74	102,374.90			
2	Installation and dismantling scaffolding		2,233	m^2	243.16	542,982.79			
	Net cost					645,357.69			
	Site-on-cost, overhead & profit	35.880%				231,554.34	Rs		
	Total					876,912.02	Rs		

Note:

SP402a2 SUPPORTING TYPE B (HANGING SUPPORT FOR GIRDER END ON NALUCHI BRIDGE)

No.	Description	Specification	Quantities	Unit	Local (Rs)		Foreign (US$)		Remarks
					Rate	Amount	Rate	Amount	
	Hiring charge of rolled steel		4,873	ton·day	239.30	1,166,158.23			101
	Installation and dismantling bracket		78.6	ton	24,434.70	1,920,567.05			54-9
	Net cost					3,086,725.28			

Service day 62 days

Total weight of steel 78.6 t

Net cost 3,086,725.28 Rs

* P899 Standard unit outputs, Ministry of Work, Japan

SP40
2a3

SUPPORTING TYPE C (CANTILEVER SUPPORT FOR PIER HEAD ON PIER 3)

No.	Description	Specification	Quantities	Unit	Local (Rs)		Foreign (US$)		Remarks
					Rate	Amount	Rate	Amount	
	Hiring charge of rolled steel		5,588	ton·day	239.30	1,337,133.51			101
	Installation and dismantling bracket		66.52	ton	24,434.70	1,625,395.93			54-9
	Net cost					2,962,529.44			
	Site-on-cost, overhead & profit	35.880%				1,062,955.56	Rs		
	Total					4,025,485.00	Rs		

Service day 84 days Net cost
Total weight of steel 66.52 t 2,962,529.44 Rs

* P899 Standard unit outputs, Ministry of Work, Japan

SP40
2a6

SUPPORTING TYPE E2 (FOR PIER 4 PIER HEAD ON NALUCHI BRIDGE)

No.	Description	Specification	Quantities	Unit	Local (Rs)		Foreign (US$)		Remarks
					Rate	Amount	Rate	Amount	
	Hiring charge of rolled steel		960	ton·day	239.30	229,728.29			101
	Installation and dismantling bracket		16	ton	24,434.70	390,955.12			54-9
	Net cost					620,683.41			
	Site-on-cost, overhead & profit	35.880%				222,701.21	Rs		
	Total					843,384.62	Rs		

Service day 60 days Net cost
Total weight of steel 16 t 620,683.41 Rs

* P899 Standard unit outputs, Ministry of Work, Japan

SP4 02b1 **SCAFFOLDING TYPE A1 (FOR OUTSIDE OF PIER 3)**

No.	Description	Specification	Quantities	Unit	Local (Rs)		Foreign (US$)		Remarks
					Rate	Amount	Rate	Amount	
1	Hiring charge of scaffolding	Flame type	446,600	m^2·day	1.74	776,927.50			
2	Installation and dismantling scaffolding		2,233	m^2	243.16	542,982.79			
	Net cost					1,319,910.29			
	Site-on-cost, overhead & profit	35.880%				473,583.81	Rs		
	Total					1,793,494.10	Rs		

10day/lift x 10 = 100 days

Net cost
1,319,910.29 Rs/m^2

SP40 2b2 **SCAFFOLDING TYPE A2 (FOR INSIDE OF PIER 3)**

No.	Description	Specification	Quantities	Unit	Local (Rs)		Foreign (US$)		Remarks
					Rate	Amount	Rate	Amount	
1	Hiring charge of scaffolding	Flame type	135,600	m^2day	1.74	235,896.48			
2	Installation and dismantling scaffolding		678	m^2	243.16	164,864.46			
	Net cost					400,760.94			
	Site-on-cost, overhead & profit	35.880%				143,793.02	Rs		
	Total					544,553.96	Rs		

10day/lift x 10 = 100 days

Net cost

400,760.94 Rs/m^2

SP40 2b3 SCAFFOLDING TYPE B (FOR PYLON OF NALUCHI BRIDGE)

No.	Description	Specification	Quantities	Unit	Local (Rs)		Foreign (US$)		Remarks
					Rate	Amount	Rate	Amount	
1	Hiring charge of scaffolding	Flame type	144,000	m^2day	1.74	250,509.54			
2	Installation and dismantling scaffolding		960	m^2	243.16	233,436.40			
3	Tower crane		960	m2	1,388.71	1,333,158.20			
	Net cost					1,817,104.14			
	Site-on-cost, overhead & profit	35.880%				651,976.97	Rs		
	Total					2,469,081.11	Rs		

Net cost
1,817,104.14 Rs/m^2

SP40
2b4

SCAFFOLDING TYPE C (FOR PIER P2 AND P4 OF NALUCHI BRIDGE)

No.	Description	Specification	Quantities	Unit	Local (Rs)		Foreign (US$)		Remarks
					Rate	Amount	Rate	Amount	
1	Hiring charge of scaffolding	Flame type	21,600	m^2	1.74	37,576.43			
2	Installation and dismantling scaffolding		180	m^2	243.16	43,769.32			
	Net cost					81,345.76			
	Site-on-cost, overhead & profit	35.880%				29,186.86	Rs		
	Total					110,532.61	Rs		

Net cost
81,345.76 Rs/m^2

SP40
2a4

SUPPORTING TYPE D (FOR PC BOX GIRDER ON WEST SIDE APPROACH VIADUCT)

Viaduct

No.	Description	Specification	Quantities	Unit	Local (Rs)		Foreign (US$)		Remarks
					Rate	Amount	Rate	Amount	
	Foundation of support		1	LS	404,196.28	404,196.28			55-1
	Column support		80.2	m^3	56,000.00	4,488,960.00			80,000*(1-0.3)
	H beam		220.4	m	33,000.00	7,274,349.46			55,000*(1-0.4)
	Installation and dismantling column support		1	LS	305,972.48	305,972.48			55-6
	Cost of scaffolding		144,000	m2·day	1.74	250,509.54			1600m^2 × 90days
	Installation and dismantling scaffolding		1,600	m2	243.16	389,060.66			
	Net cost					###########			
	Site-on-cost, overhead & profit	35.880%				4,704,961.77	Rs		
	Total					###########	Rs		

SP40
2b4

SCAFFOLDING Type C (for Pier P5, P6, P7 and A2 Pier of PC box girder)

No.	Description	Specification	Quantities	Unit	Local (Rs)		Foreign (US$)		Remarks
					Rate	Amount	Rate	Amount	
1	Hiring charge of scaffolding	Flame type	261,810	m^2	1.74	455,457.65			
2	Installation and dismantling scaffolding		2,909	m^2	243.16	707,360.92			
	Net cost					1,162,818.57			
	Site-on-cost, overhead & profit	35.880%				417,219.30	Rs		
	Total					1,580,037.88	Rs		

Net cost
1,162,818.57 Rs

100 COST OF FRAME SCAFFOLDING (PER 100M^2)

No.	Description	Specification	Quantities	Unit	Local (Rs)		Foreign (US$)		Remarks
					Price	Amount	Rate	Amount	
1	Frame	1200×1700mm	32.7	nr	1,907.40	62,333.33			16kg/nr
2	Plat form	1800×500mm	32.7	sheet	1,351.50	44,166.67			16.7kg/sheet
3	Brace	1800mm	32.7	nr	372.30	12,166.67			4.2kg/nr
4	Step	1800mm	6.5	nr	6,885.00	45,000.00			33.7kg/nr
5	Jack base	250mm	65.4	nr	382.50	25,000.00			3.9kg/nr
6	Connecting pin	225, 13mm dia.	32.7	nr	71.40	2,333.33			0.55kg/nr
7	Steel pipe, 4.0m	48.6mm dia	45.1	nr	596.70	26,910.00			2.7kg/m
8	Universal cramp	48.6mm dia	17.4	nr	86.70	1,511.11			
9	Wall anchor	700	6.5	nr	1,030.20	6,733.33			
					Total	226,154.44	Rs		
						2,261.54	Rs/m^2		
					or	1,884.62	Rs/m^3		

Scaffolding required for Naluchi Bridge

	m^2	day		
P3 pier	2,911	200		
Pylon	960	150		
Substructure	600	300		
	4,471	650	2,906,150	m^2-day

Purchase cost

2,257.84 x 7,671 = 10,111,365 Rs

Purchase cost ×

$$\left(\frac{(1-0.5)}{2{,}906{,}150}\right) = 1.740 \quad \text{Rs/m}^2\text{-day}$$

1.74 **Rs/m^2** 掛m^2

1.45 **Rs/m^3** 空m^3

P226 Japan Machinery hiring charge

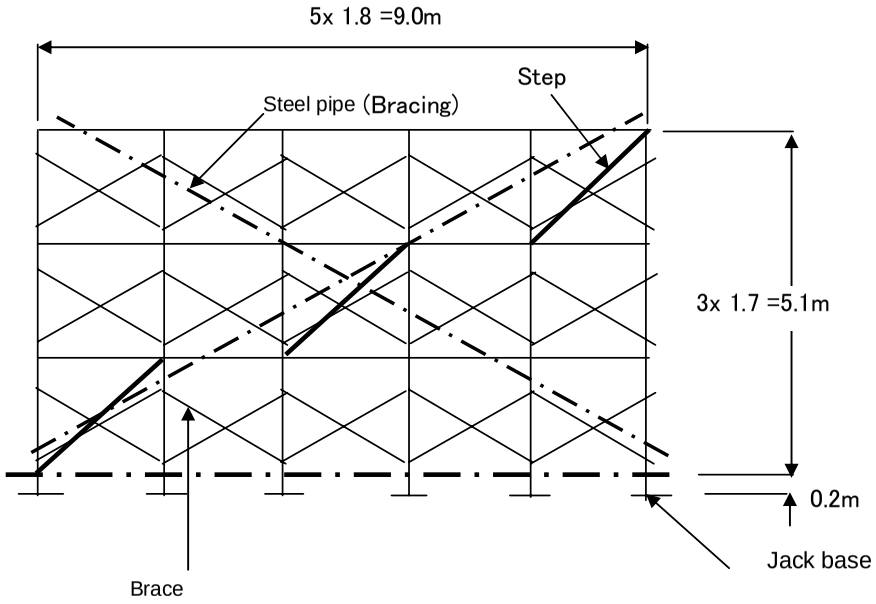
5x 1.8 =9.0m
Step
Steel pipe (Bracing)
3x 1.7 =5.1m
0.2m
Jack base
Brace

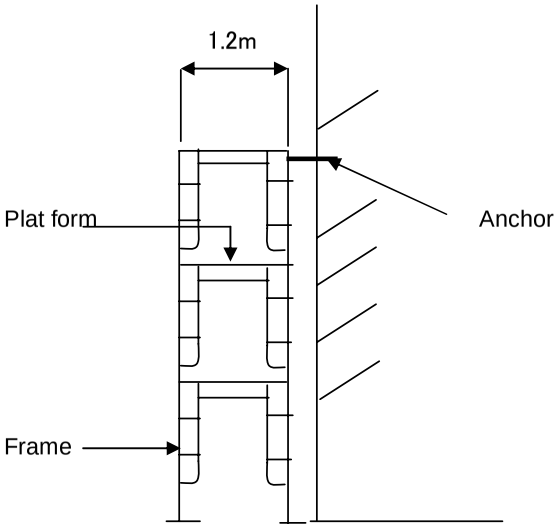
1.2m
Plat form
Anchor
Frame

101 COST OF ROLLED STEEL, (PER TON)

No.	Description	Specification	Quantities	Unit	Local (Rs)		Foreign (US$)		Remarks
					Price	Amount	Rate	Amount	

Price of H beam 55,000 Rs/ton at Muzaffalabad
Total weight of beam used 70 ton

Purchase price 3,850,000 Rs

Cost

$$\text{Purchase price x} \left(\frac{\text{(1- resale value)}}{11{,}262.00} \right) = 239.3 \text{ Rs/ton-day}$$

Re-sale value 30%

	ton	days	
Pier table	66.5	84	5,586.00
End span	39.2	60	2,352.00
End span	39.4	60	2,364.00
P4	16	60	960.00
			11,262.00 ton-day

104 COST OF STEEL FORMWORK FOR SUBSTRUCTURE

Form to be manufactured, A =	250	m^2	Plane
Manufacture cost, 1876.5 Rs/m^2 x1.0›	469,125	Rs	
Total formwork area	3,014.9	m^2	

Rate of depreciation of steel form. 20% of residua value will be assumed.

$$\left(\frac{(1-0.20)}{3{,}014.90} \right) = 0.00027 \text{ per } m^2$$

Cost of form

469,125 × 0.00027= **124.48** Rs/m^2

105 COST OF STEEL FORMWORK FOR SUPERSTRUCTURE

Form to be manufactured, A =	700	m^2	Plane
Manufacture cost, 1876.5 Rs/m^2 x1.0x A	1,313,550	Rs	
Total formwork area	1,811.8	m^2	

Rate of depreciation of steel form. 20% of residua value will be assumed.

$$\left(\frac{(1-0.20)}{1,811.80} \right) = 0.00044 \text{ per } m^2$$

Cost of form

1,313,550 × 0.00044= **580.00** Rs/m^2

60-1 INSTALLATION AND DISMANTLING H BEAM FOR SUPPORT OF BENT, (PER 10M)

Approach Br & Viaduct

No.	Description	Specification	Quantities	Unit	Local (Rs)		Foreign (US$)		Remarks
					Rate	Amount	Rate	Amount	
1	Foreman		0.11	manday	2784.708	306.31788			
2	Skilled labor		0.34	manday	985.20	334.97			
3	Labor		0.24	manday	904.14	216.99			
4	Rough terrain crane	35t	0.13	day	13,235.29	1,720.59			
5	Fuel		15.18	liter	38.05	577.42			
6	Hiring charge of H beam		0.93	t	239.30	222.55			
	Net cost					3,378.84	Rs		
						337.88	Rs/m		

* P908 Standard unit outputs, Ministry of Work, Japan

60-3 INSTALLATION AND DISMANTLING FRAME SUPPORT, (PER 100M^3) — Viaduct

No.	Description	Specification	Quantities	Unit	Local (Rs) Rate	Local (Rs) Amount	Foreign (US$) Rate	Foreign (US$) Amount	Remarks
1	**Foreman**		1.18	manday	2,784.71	3,285.96			
2	**Skilled labor**		4.79	〃	1,082.47	5,185.04			
3	**Labor**		3.42	〃	904.14	3,092.16			
4	**Rough terrain crane**		0.47	day	13,235.29	6,220.59			
5	**Fuel**		15.18	liter	38.05	577.42			
	Net cost					18,361.17	Rs		
						183.61	Rs/m^3		

Volume of support
V = (W+2.4) x H x L
Soil pressure
P=(2.81xd+0.4)xW/W1x9.806 kN/m^2

* P905 Standard unit outputs, Ministry of Work, Japan

54-6	INSTALLATION AND REMOVAL OF FRAME SCAFFOLDING, n<0.1, h<30m (PER 100M^2)								
No.	Description	Specification	Quantities	Unit	Local (Rs)		Foreign (US$)		Remarks
					Rate	Amount	Rate	Amount	
1	Foreman		1.30	day	2,784.71	3,620.12			
2	Skilled labor		3.80	〃	1,082.47	4,113.39			
3	Labor		2.70	〃	904.14	2,441.18			
4	Hiring cost of rough terrain crane		0.8	day	13,235.29	10,588.24			
5	Fuel		93.4	liter	38.05	3,553.36			
				Total		24,316.29	Rs		
	Net cost					243.16	Rs/m^2		

* P310 Standard unit outputs, Ministry of Work, Japan

54-8 INSTALLATION AND REMOVAL OF FRAME SUPPORT H<30M, F<80kN/M^2 (PER 100 M^3)

Approach Bridge

No.	Description	Specification	Quantities	Unit	Local (Rs)		Foreign (US$)		Remarks
					Rate	Amount	Rate	Amount	
1	Foreman		2.10	day	2,784.71	5,847.89			
2	Carpenter		2.70	〃	1,455.34	3,929.42			
3	Scaffold worker		4.20	〃	1,082.47	4,546.38			
4	Labor		6.00	〃	904.14	5,424.85			
5	Hiring cost rough terrain crane		1.2	day	13,235.29	15,882.35			
6	Fuel		140.08	liter	38.05	5,330.04			
	Net cost					40,960.94	Rs		
						409.61	Rs/m^3		

* P314 Standard unit outputs, Ministry of Work, Japan

54-9 INSTALLATION AND DEMOLITION OF BRACKET FOR PIER TABLE (PER TON) Naluchi Bridge

No.	Description	Specification	Quantities	Unit	Local (Rs)		Foreign (US$)		Remarks
					Rate	Amount	Rate	Amount	
1	Bridge foreman		0.4	day	6,169.41	2,467.76			
2	Carpenter		0.2	〃	1,455.34	291.07			
3	Bridge worker		2.4	〃	4,627.06	11,104.94			
4	labor		1.6	〃	904.14	1,446.63			
6	Tower crane		0.3	day	16,146.96	4,844.09			
7	Fuel		11.895	liter	38.05	452.60			
9	Sundries			LS		3,827.60			25% of labor cost
					Total	24,434.70	Rs		

Net cost 24,434.70 Rs/ton

* P899 Standard unit outputs, Ministry of Work, Japan

54-10 **INSTALLATION AND DEMOLITION OF BRACKET FOR END SPAN (PER TON)** **Naluchi Bridge**

No.	Description	Specification	Quantities	Unit	Local (Rs)		Foreign (US$)		Remarks
					Rate	Amount	Rate	Amount	
	Bridge foreman		0.4	manday	6,169.41	2,467.76			
	Carpenter		-						
	Bridge worker		2.6	manday	4,627.06	12,030.35			
	labor		1.8	manday	904.14	1,627.45			
	Hiring charge of rolled steel		1	ton·day	239.30	239.30			
	Rough terrain crane		0.5	day	13,235.29	6,617.65			
	Fuel		19.825	liter	38.05	754.34			
	Sundries			LS		3,547.63			22% of labor cost
					Total	27,284.49	Rs		

Net cost 27,284.49 Rs/ton

* P899 Standard unit outputs, Ministry of Work, Japan

54-11 **INSTALLATION AND DEMOLITION OF FRAME SUPPORT OVER BRACKET OF PIER TABLE (PER 10M^3)** **Naluchi Bridge**

No.	Description	Specification	Quantities	Unit	Local (Rs)		Foreign (US$)		Remarks
					Rate	Amount	Rate	Amount	
1	Bridge foreman		0.4	day	6,169.41	2,467.76			
2	Carpenter		0.4	〃	1,455.34	582.14			
3	Bridge worker		1.3	〃	4,627.06	6,015.18			
4	labor		1.3	〃	904.14	1,175.38			
5	Tower crane		0.3	day	16,146.96	4,844.09			
6	Fuel		11.895	liter	38.05	452.60			
7	Sundries			LS		409.62			4% of labor cost
					Total	15,946.77	Rs		

Net cost 1,594.68 Rs/m^3

* P899 Standard unit outputs, Ministry of Work, Japan

54-12 INSTALLATION AND DEMOLITION OF FRAME SUPPORT UNDER CANTILEVERED SLAB AND INSIDE BOX GIRDER(PER 10M^3)

Naluchi Bridge

No.	Description	Specification	Quantities	Unit	Local (Rs)		Foreign (US$)		Remarks
					Rate	Amount	Rate	Amount	
1	Bridge foreman		0.1	day	6,169.41	616.94			
2	Carpenter		0.1	〃	1,455.34	145.53			
3	Bridge worker		0.5	〃	4,627.06	2,313.53			
4	labor		0.5	〃	904.14	452.07			
5	Rough terrain crane	35t	0.1	day	13,235.29	1,323.53			
6	Fuel		3.965	liter	38.05	150.87			
7	Sundries			LS		282.25			8% of labor cost
					Total	5,284.72	Rs		
	Net cost					528.47	Rs/m^3		

* P899 Standard unit outputs, Ministry of Work, Japan

SP10 7f SHINSO FOUNDATION (15.0M DIAMETER, L=10M)

No.	Description	Specification	Quantities	Unit	Local (Rs)		Foreign (US$)		Remarks
					Rate	Amount	Rate	Amount	
1	EXCAVATION PER M IN DEPTH		8.7	m	75,184.75	654,107.33			58-1
2	EXCAVATION BY BLASTING PER M3		1,096	m^3	549.24	601,969.85			58-2
3	ERECTION LINER PLATE PER METER IN DEPTH		14	m	374,441.71	5,242,183.96			58-3
4	INSTALLATION OF GROUT PIPE		10	m	5,663.30	56,632.98			58-4
5	GROUTING PER M3		32.2	m^3	3,135.48	100,962.55			58-5
6	RING CONCRETE		1	LS	3,135.48	3,135.48	6,658,992.15		58-6
	Coffering								
7	Open excavation		1,417	m3	72.12	102,194.04			E19
8	Bulldozer	20t	15	day	26,195.72	392,935.85			E27
9	Backhoe	$0.6m^3$	15	day	18,602.05	279,030.71			
10	Sand bag		1,000.0	bag	16.27	16,274.55			
	Net cost					7,449,427.30			

Volume of excavation	2,792.6	m^3	Allow 20cm additional excavation				
Excavation capacity	8.12	m^3/h					
Average excavation depth per day, L=	0.31	m/day	A=	186.1706			
Time of excavation	49.1	days					
Dynamite	1,424.2	kg	Soft rock	1,536.6	426	1	2,116.7
			Hard rock	1,096.0	549	1.29	3,828.4
Detonator	7,260.7	nr		2,632.6		2.29	
Fuel consumption							
Backhoe		liter					
Rough terrain crane		〃					
Compressor		〃					
Pump		〃					

58-1 EXCAVATION PER M IN DEPTH

No.	Description	Specification	Quantities	Unit	Local (Rs)		Foreign (US$)		Remarks
					Rate	Amount	Rate	Amount	
	Skilled labor		6.6	manday	985.20	6,453.74			2/L
	Labor		3.3	manday	904.14	2,961.38			1/L
	Hiring charge of equipment								
	Excavation by backhoe	$0.2m^3$	3.3	day	6,617.65	21,675.08			1/L
	Rough terrain crane	35t	3.3	day	13,235.29	43,350.15			1/L
	Others					744.40			1% of the above
	Net cost					75,184.75	Rs/m		

Excavation capacity 8.12 m^3/h

Average excavation depth per day, L= 0.31 m/day A= 186.1706

P17-14

58-2 EXCAVATION BY BLASTING PER M^3

No.	Description	Specification	Quantities	Unit	Local (Rs)		Foreign (US$)		Remarks
					Rate	Amount	Rate	Amount	
	Skilled labor		0.0376	manday	985.20	37.02			(n+1)T/7/A1
	Labor		0.0094	manday	904.14	8.49			1T/7/A1
	Hiring charge of equipment								
	Hand hammer	15kg	0.18	hr	143.78	26.04			(T-0.8)n/A1
	Air compressor	$10.5m^3$	0.06	hr	1,397.06	84.35			(T−0.8)/A1
	Dynamite		0.5	kg	601.80	300.90			¥1,180
	detonator		3.625	each	25.50	92.44			¥50
	Net cost					549.24	Rs/m^3		

Excavation capacity 8.12 m^3/h

Average excavation depth per day, L= 0.31 m/day A= 186.1706

Number of hand hammer, n= 3 nr

Construction time required for blasting

$$T = \frac{8.7\,A - 1}{60\,n} + 0.8 = 9.8 \text{ hour}$$

Excavation by blasting, A1=0.8A = 148.94 m^3

P17-16

58-3 ERECTION LINER PLATE PER METER IN DEPTH

No.	Description	Specification	Quantities	Unit	Local (Rs)		Foreign (US$)		Remarks
					Rate	Amount	Rate	Amount	
	Skilled labor		2.52	manday	985.20	2,482.71			4P
	Labor		0.63	manday	904.14	569.61			P
	Rough terrain crane	35t	0.63	day	13,235.29	8,338.24			P
	Fuel		73.54	liter	38.05	2,798.27			
	Liner plate	2.7mm	1.00	m	194,820.00	194,820.00			
	Ring	H125	1.00	m	163,342.80	163,342.80			
	Others					2,090.09			1 % of the above
	Net cost					374,441.71	Rs/m		

Average days for erection of liner plate

P=0.042 × 15= 0.63 day/m

Liner plate, t=2.7mm	¥382,000	/m	194,820	Rs/m	P328
Ring, H125	¥320,280	/m	163,343	Rs/m	

P17-18 Standard Output, JHA Japan

58-4 INSTALLATION OF GROUT PIPE

No.	Description	Specification	Quantities	Unit	Local (Rs)		Foreign (US$)		Remarks
					Rate	Amount	Rate	Amount	
	Foreman		0.90	manday	2,784.71	2,506.24			
	skilled labor		1.80	manday	985.20	1,773.36			
	PVC pipe, 40mm		35.00	m	30.00	1,050.00			
	Elbow		6.00	m	20.00	120.00			
	Y		10	nr	20.00	200.00			
	Others					13.70			1 % of material
	Net cost					5,663.30	Rs		

PVC pipe, P1=4(10.0-1.25)=	35.00	m
Elbow	6	no
Y P2=4((10.0-1.25/2.5)-1)	10	no

P17-19 Standard Output, JHA Japan

58-5 GROUTING PER M^3

No.	Description	Specification	Quantities	Unit	Local (Rs)		Foreign (US$)		Remarks
					Rate	Amount	Rate	Amount	
	Skilled labor		0.08	manday	985.20	82.10			
	labor		0.04	manday	904.14	37.67			
	Grout mixer		0.04	day	2,019.60	84.15			
	Grout pump		0.04	day	3,320.10	138.34			
	Generator	45kW	0.04	day	3,088.24	128.68			
	Cement		0.3468	t	6,100.00	2,115.48			
	Sand		0.4887	m^3	1,060.00	518.02			
	Others					31.04			1% of above cost
	Net cost					3,135.48	Rs		

P17-21 Standard Output, JHA Japan

58-6 RING CONCRETE

No.	Description	Specification	Quantities	Unit	Local (Rs)		Foreign (US$)		Remarks
					Rate	Amount	Rate	Amount	
	Concrete	A1	37.3	m^3	5,801.05	216,379.02			
	Reinforcing bar		1.9	ton	63,250.00	120,807.49			
	Formwork		51.8	m^2	800.00	41,440.00			
	Net cost					378,626.51	Rs		

P17-21 Standard Output, JHA Japan

SP40
6h1

EXPANSION JOINT 100MM (PER M)

No.	Description	Specification	Quantities	Unit	Local (Rs)		Foreign (US$)		Remarks
					Rate	Amount	Rate	Amount	
1	Expansion joint		1.0	m	34,538.73	34,538.73			
2	Labor		1.15	manday	904.14	1,039.76			
3	Others			LS		355.78			1% of the above
4	**Hiring charge of concrete cutter**		0.0476	day	1,323.53	63.03			
5	**ditto, but diamond plate, 30cm**		0.00125	nr	15,000.00	18.75			
6	**Labor**		0.0319	manday	904.14	28.85			
7	**Hand breaker**	20kg	0.0071	day	255.83	1.83			
8	**Hiring charge of compressor**	$3.5m^3$/min.	0.0071	day	3,088.24	22.06			
9	**Fuel**		0.1404	liter	38.05	5.34			
10	**Skilled worker**		0.0375	manday	985.20	36.95			
11	**Hiring charge of dump truck**	10t	0.03	day	4,411.76	132.35			
12	**Fuel**		2.237063	liter	38.05	85.12			
13	**Others**					10.71			5% of cutter and dump truck
14	**Skilled labor**		0.0576	manday	985.20	56.75			
15	**Preparation of concreting**			LS	98.52	0.00			10% of the skilled labor
16	**Concrete**	Class D1	0.1	m^3	5,920.63	592.06			60-1
17	Reinforcing bar		0.01	t	62,419.29	624.19			
18	Others			LS		12.48			2% of reinforcing bar
	Net cost					37,624.74			
	Site-on-cost, overhead & profit	35.880%				13,499.76	Rs		
	Total					51,124.50	Rs		

Net cost
37,624.74 Rs/m

P16-19 Standard Output, JHA Japan

SP40
6h2

EXPANSION JOINT, 160MM (PER M)

No.	Description	Specification	Quantities	Unit	Local (Rs)		Foreign (US$)		Remarks
					Rate	Amount	Rate	Amount	
1	Expansion joint		1.0	m	203,490.00	203,490.00			
2	Labor		1.15	manday	904.14	1,039.76			
3	Others			LS		2,045.30			1% of the above
4	**Hiring charge of concrete cutter**		0.0476	day	1,323.53	63.03			
5	**ditto, but diamond plate, 30cm**		0.00125	nr	15,000.00	18.75			
6	**Labor**		0.0319	manday	904.14	28.85			
7	**Hand breaker**	20kg	0.0071	day	255.83	1.83			
8	**Hiring charge of compressor**	$3.5m^3$/min.	0.0071	day	3,088.24	22.06			
9	**Fuel**		0.0000	liter	38.05	0.00			
10	**Skilled worker**		0.0375	manday	985.20	36.95			
11	**Hiring charge of dump truck**	10t	0.03	day	4,411.76	132.35			
12	**Fuel**		0.04536	liter	38.05	1.73			
13	**Others**					10.71			5% of cutter and dump truck
14	**Skilled labor**		0.0576	manday	985.20	56.75			
15	**Preparation of concreting**			LS	98.52	0.00			10% of the skilled labor
16	**Concrete**	Class D1	0.1	m^3	5,920.63	592.06			60-1
17	Reinforcing bar		0.01	t	62,419.29	624.19			
18	Others			LS		12.48			2% of reinforcing bar
	Net cost					208,176.79			
	Site-on-cost, overhead & profit	35.880%				74,693.83	Rs		
	Total					282,870.62	Rs		

Net cost
208,176.79 Rs/m

P16-19 Standard Output, JHA Japan

SP40
6h3

EXPANSION JOINT 240MM (PER M)

No.	Description	Specification	Quantities	Unit	Local (Rs)		Foreign (US$)		Remarks
					Rate	Amount	Rate	Amount	
1	Expansion joint		1.0	m	268,668.00	268,668.00			
2	Labor		1.15	manday	904.14	1,039.76			
3	Others			LS		2,697.08			1% of the above
4	**Hiring charge of concrete cutter**		0.0476	day	1,323.53	63.03			
5	**ditto, but diamond plate, 30cm**		0.00125	nr	15,000.00	18.75			
6	**Labor**		0.0319	manday	904.14	28.85			
7	**Hand breaker**	20kg	0.0071	day	255.83	1.83			
8	**Hiring charge of compressor**	$3.5m^3$/min.	0.0071	day	3,088.24	22.06			
9	**Fuel**		0.0000	liter	38.05	0.00			
10	**Skilled worker**		0.0375	manday	985.20	36.95			
11	**Hiring charge of dump truck**	10t	0.03	day	4,411.76	132.35			
12	**Fuel**		0	liter	38.05	0.00			
13	**Others**					10.71			5% of cutter and dump truck
14	**Skilled labor**		0.0576	manday	985.20	56.75			
15	**Preparation of concreting**			LS	98.52	0.00			10% of the skilled labor
16	**Concrete**	Class D1	0.1	m^3	5,920.63	592.06			60-1
17	Reinforcing bar		0.01	t	62,419.29	624.19			
18	Others			LS		12.48			2% of reinforcing bar
	Net cost					274,004.84			
	Site-on-cost, overhead & profit	35.880%				98,312.94	Rs		
	Total					372,317.78	Rs		

Net cost
274,004.84 Rs/m

P16-19 Standard Output, JHA Japan

62-1 CONCRETE CLASS A4 FOR EXPANSION JOINT (PER 10M^3)

No	Description	Specification	Quantities	Unit	Local (Rs)		Foreign (US$)		Remarks
					Rate	Amount	Rate	Amount	
1	Concrete		10.0	m^3	5,718.97	57,189.73			
2	Transportation		10.0	m^3	201.66	2,016.55			
3	Curing		10.0	m^3	0.00	0.00			
	Net cost					59,206.28	Rs		
						5,920.63	Rs/m^3		

Note:

SP40 6e1 **ELASTOMETIC BEARING PAD, FOR HOLLOW SLAB (620x470x95MM) PER 10 PADS**

No.	Description	Specification	Quantities	Unit	Local (Rs)		Foreign (US$)		Remarks
					Rate	Amount	Rate	Amount	
1	Bridge foreman		1.11	manday	6,169.41	6,854.90			10/Dx1
2	Bridge worker		2.22	〃	4,627.06	10,282.35			10/Dx2
3	Labor		2.22	〃	904.14	2,009.20			10/Dx2
4	Elastomeric pad		10	nr	100,914.81	1,009,148.14			
5	Non-shrink mortar		0.02914	m^3	22,555.22	657.26			
6	Sundries					765.86			4% of labor and plant
	Net cost					1,029,717.71			
	Site-on-cost, overhead & profit	35.880%				369,462.71	Rs		
	Total					1,399,180.43	Rs		

Number of shoe installed in one day = 9 nr

* P864 Standard Unit Outputs, Ministry of Work, Japan

SP40 6e2 ELASTOMERIC BEARING PAD, FOR HOLLOW SLAB (770x570x95MM) PER 10 PADS

No.	Description	Specification	Quantities	Unit	Local (Rs)		Foreign (US$)		Remarks
					Rate	Amount	Rate	Amount	
1	Bridge foreman		1.11	manday	6,169.41	6,854.90			10/Dx1
2	Bridge worker		2.22	〃	4,627.06	10,282.35			10/Dx2
3	Labor		2.22	〃	904.14	2,009.20			10/Dx2
4	Elastomeric pad		10	nr	103,235.86	1,032,358.60			
5	Non-shrink mortar		0.04389	m^3	22,555.22	989.95			
6	Sundries					765.86			4% of labor and plant
	Net cost					1,053,260.87			
	Site-on-cost, overhead & profit	35.880%				377,910.00	Rs		
	Total					1,431,170.87	Rs		

Number of shoe installed in one day = 9 nr

* P864 Standard Unit Outputs, Ministry of Work, Japan

SP40 6e3 **ELASTOMERIC BERING PAD, FOR HOLLOW SLAB (1070x1070x240MM) per 10 PADS**

No.	Description	Specification	Quantities	Unit	Local (Rs)		Foreign (US$)		Remarks
					Rate	Amount	Rate	Amount	
	Bridge foreman		3.33	manday	6,169.41	20,564.71			10/Dx1
	Bridge worker		6.67	〃	4,627.06	30,847.06			10/Dx2
	Labor		6.67	〃	904.14	6,027.61			10/Dx2
	Shoe		10	nr	292,130.80	2,921,307.98			
	Non-shrink mortar		0.22898	m^3	22,555.22	5,164.69			
	Rough terrain crane		3.33	day	13,235.29	44,117.65			
	Fuel		389.11	liter	38.05	14,805.68			
	Sundries					2,297.58			4% of labor and plant
	Net cost					3,045,132.95			
	Site-on-cost, overhead & profit	35.880%				1,092,593.70	Rs		
	Total					4,137,726.66	Rs		

Note: Number of shoe installed in one day = 3 nr

* P864 Standard Unit Outputs, Ministry of Work, Japan

SP40
6e4

ELASTOMERIC BEARING PAD, FOR HOLLOW SLAB (670x520x122mm) PER 10 PADS

West viaduct

No.	Description	Specification	Quantities	Unit	Local (Rs)		Foreign (US$)		Remarks
					Rate	Amount	Rate	Amount	
1	Bridge foreman		1.11	manday	6,169.41	6,854.90			10/Dx1
2	Bridge worker		2.22	〃	4,627.06	10,282.35			10/Dx2
3	Labor		2.22	〃	904.14	2,009.20			10/Dx2
4	Elastomeric pad		10	nr	158,355.03	1,583,550.29			
5	Non-shrink mortar		0.06968	m^3	22,555.22	1,571.65			
6	Sundries					765.86			4% of labor and plant
	Net cost					1,605,034.25			
	Site-on-cost, overhead & profit	35.880%				575,886.29	Rs		
	Total					2,180,920.54	Rs		

Number of shoe installed in one day = 9 nr

Net cost
1,605,034.25 Rs/pad

* P864 Standard Unit Outputs, Ministry of Work, Japan

SP40 6j DRAIN PIT FOR BRIDGE DECK DRAIN (PER PLACE)

No.	Description	Specification	Quantities	Unit	Local (Rs)		Foreign (US$)		Remarks
					Rate	Amount	Rate	Amount	
	Drain pit		1	each	2,500.00	2,500.00	0	0	
	skilled labor		0.12	manday	985.20	118.22			
	labor		0.12	manday	904.14	108.50			
	Net cost					2,726.72			
	Site-on-cost, overhead & profit	35.880%				978.35	Rs		
	Total					3,705.07	Rs		

Note:

Net cost
2,726.72 Rs

P16-9 Standard Output, JHA Japan

SP40 3c

FORMWORK TYPE E FOR BARRIER, CONCRETE RAILING (PER 10M^2)

No.	Description	Specification	Quantities	Unit	Local (Rs)		Foreign (US$)		Remarks
					Rate	Amount	Rate	Amount	
1	Plywood	1.2x90x180 cm	7	Sheet	1,000.00	7,172.84			10/(0.9x1.8) + 1
2	Timber	5x7.5x400cm	15	nr	308.33	4,625.00			
3	Carpenter		2.2	manday	1,455.34	3,201.75			
4	Rough terrain crane	35t	0.06	day	13,235.29	794.12			
5	Fuel		7.00	liter	38.05	266.50			
6	**Others**					321.20			2% of the above
	Net cost					16,381.42			
	Site-on-cost, overhead & profit	35.880%				5,877.65	Rs		
	Total					22,259.07	Rs		

Note:

Net cost

1,638.14 Rs/m^2

P13-13 Standard Output, JHA Japan

SP40 6i

DRAIN PIPE FOR NALUCHI BRIDGE (PER BRIDGE)

No.	Description	Specification	Quantities	Unit	Local (Rs)		Foreign (US$)		Remarks
					Rate	Amount	Rate	Amount	
1	Installation of concrete anchor bolts		56	nr	114.11	6,390.22			70-1
2	Installation of PVC pipe		48.714	m	1,077.99	52,513.07			70-2
3	Saddle and band		28	set	300.00	8,400.00			
	Net cost					67,303.29			
	Site-on-cost, overhead & profit	35.880%				24,148.42	Rs		
	Total					1,877.32	Rs/m		

Note:					
	Anchor bolts	56	nr	Net cost	
	PVC pipe	48.714	m	1,381.60	Rs/m
	Saddle, band other hardware	28	set		

P922 Standard unit outputs, Ministry of Work, Japan

SP40
6k

SLAB DRAIN

No.	Description	Specification	Quantities	Unit	Local (Rs)		Foreign (US$)		Remarks
					Rate	Amount	Rate	Amount	
1	Installation of slab drain	Labor	0.015	nr	904.14	13.56			
2	Cost of slab drain		1	set	6,885.00	6,885.00			
	Net cost					6,898.56			
	Site-on-cost, overhead & profit	35.880%				2,475.20	Rs		
	Total					9,373.77	Rs/m		

Net cost
6,898.56 Rs/set

P16-9 Standard Output, JHA Japan

70−1 INSTALLATION OF CONCRETE ANCHOR BOLTS (PER 100 BOLTS)

No.	Description	Specification	Quantities	Unit	Local (Rs)		Foreign (US$)		Remarks
					Rate	Amount	Rate	Amount	
1	Foreman		0.9	manday	2,784.71	2,506.24			
2	Scaffolding worker		2.7	〃	1,082.47	2,922.67			
3	Labor		1.8	〃	904.14	1,627.45			
4	Anchor bolts	M12x100	100	nr	41.31	4,131.00			
5	Others					223.75			2% of the above price
	Net cost					11,411.11	Rs		
						114.11	Rs/No		

10-70mm ¥46 P55
23 Rs/No

Cost of anchor, M12x100 81 ¥/each P55
41.31 Rs/each

P922 Standard unit outputs, Ministry of Work, Japan

70-2 INSTALLATION OF PVC PIPE (PER 10M)

No.	Description	Specification	Quantities	Unit	Local (Rs)		Foreign (US$)		Remarks
					Rate	Amount	Rate	Amount	
1	Foreman		0.3	manday	2,784.71	835.41			
2	Scaffolding worker		0.9	〃	1,082.47	974.22			
3	Labor		0.6	〃	904.14	542.48			
4	PVC pipe	165mm	10	m	842.78	8,427.75			
	Net cost					10,779.87	Rs		
						1,077.99	Rs/m		

P922 Standard unit outputs, Ministry of Work, Japan

SP40
6g1

INSTALLATION OF ANCHOR BARS (DIA.65MM) PER EACH

No.	Description	Specification	Quantities	Unit	Local (Rs)		Foreign (US$)		Remarks
					Rate	Amount	Rate	Amount	
1	Anchor bolts	65x1320	1	set	64,019.75	64,019.75			
2	Non shrink mortar		0.0149	m^3	22,555.22	335.15			
3	Labor		0.25	manday	904.14	226.04			
4	Others		1	LS		645.81			1% of the above
	Net cost					65,226.74			
	Site-on-cost, overhead & profit	35.880%				23,403.35	Rs		
	Total					88,630.09	Rs/m		

Net cost
65,226.74 Rs

P16-26 Standard Output, JHA Japan

SP40
6g2

INSTALLATION OF ANCHOR BARS (DIA.90MM) PER EACH

No.	Description	Specification	Quantities	Unit	Local (Rs)		Foreign (US$)		Remarks
					Rate	Amount	Rate	Amount	
1	Anchor bolts	65x1820	1	set	93,220.19	93,220.19			
2	Non shrink mortar		0.0226	m^3	22,555.22	509.75			
3	Labor		0.25	manday	904.14	226.04			
4	Others		1	LS		939.56			1% of the above
	Net cost					94,895.53			
	Site-on-cost, overhead & profit	35.880%				34,048.52	Rs		
	Total					128,944.05	Rs/m		

Net cost
94,895.53 Rs

Installation of Anchor Bars (dia. 100mm) per each

No.	Description	Specification	Quantities	Unit	Local (Rs)		Foreign (US$)		Remarks
					Rate	Amount	Rate	Amount	
1	Anchor bolts	65x1820	1	set	0.00	0.00			
2	Non shrink mortar			m3	22,555.22	0.00			
3	Labor		0.25	manday	904.14	226.04			
4	Others		1	LS		2.26			1% of the above
	Net cost					228.30			
	Site oncost (15%)					34.24			
	Prime cost					262.54			
	Overhead					21.00			
	Profit					5.25			
	Total					288.79			
Unit Price (entered in a tender BOQ)			Local Cost (Rs)			Foreign Cost (US$)			
			288.79						

Net cost
228.30 Rs

SP40
6g3

INSTALLATION OF ANCHOR BARS (DIA. 125MM) PER EACH

No.	Description	Specification	Quantities	Unit	Local (Rs)		Foreign (US$)		Remarks
					Rate	Amount	Rate	Amount	
1	Anchor bolts	125x2620	1	set	406,871.86	406,871.86			
2	Non shrink mortar		0.0409	m3	22,555.22	922.28			
3	Labor		0.25	manday	904.14	226.04			
4	Others		1	LS		4,080.20			1% of the above
	Net cost					412,100.38			
	Site-on-cost, overhead & profit	35.880%				147,861.62	Rs		
	Total					559,962.00	Rs/m		

Net cost
412,100.38 Rs

P16-26 Standard Output, JHA Japan

75 BRIDGE NAME PALATE (PER PLATE)

No.	Description	Specification	Quantities	Unit	Local (Rs)		Foreign (US$)		Remarks
					Rate	Amount	Rate	Amount	
1	Bridge name plate		1	nr	30,000.00	30,000.00		0	
2	Labor		0.14	manday	904.14	126.58			
3	Others					1,506.33			5% of the above
	Net cost					31,632.91			

Name plate, Brass, 400x300mm 30,000 Rs

Net cost
31,632.91 Rs

P16-25 Standard Output, JHA Japan

SP40
5e

HIRING CHARGE OF FORM TRAVELER

No.	Description	Specification	Quantities	Unit	Local (Rs)		Foreign (US$)		Remarks
					Rate	Amount	Rate	Amount	
	Traveling form		348	day	20,757.00	7,218,869			
	Remodeling					2,717,280			8%of basic value
	Assembling and dismantling of traveling form		1	No.	637,583.87	637,584			76-1
	Forward and installation of traveling form		30	〃	12,244.70	367,341			76-2
	Draw back of traveling form		120	m	916.90	110,028			76-3
	Net cost					###########			
	Site-on-cost, overhead & profit	35.880%				3,965,135.65	Rs		
	Total					###########	Rs/m		

B=Hiring day of traveling form
(34+a*n+0.18n)days 327.78 day
a=day of cycle per block 14 〃
n=number of block 21 〃
E=Mobilization and demobilization 20 〃
A'=Hiring day of PC equipment
19+B/2+45 227.89 day
A=Hiring day of equipment for girder construction
84+B/2+45 292.89 day
C=Hiring day of equipment for traveling form 17+n
Moving distance of traveling form 260 m

Cost of traveler per day 20,757.00 Rs/day
Basic value ########### Rs

* P897 Standard unit outputs, Ministry of Work, Japan

76-1 ASSEMBLING AND DISMANTLING OF TRAVELING FORM

No.	Description	Specification	Quantities	Unit	Local (Rs)		Foreign (US$)		Remarks
					Rate	Amount	Rate	Amount	
1	PC foreman		9.1	day	6,169.41	56,141.65			
2	PC worker		61.7	〃	4,627.06	285,489.53			
3	Labor		51.3	〃	904.14	46,382.47			
4	Rough terrain crane	35t	13.2	〃	13,235.29	174,705.88			
5	Fuel		1,540.88	liter	38.05	58,630.48			
6	Sundries					16,233.86			35% of the labor cost
	Net cost					637,583.87	Rs		

* P900 Standard unit outputs, Ministry of Work, Japan

76-2 FORWARD AND INSTALLATION OF TRAVELING FORM (PER BLOCK)

No.	Description	Specification	Quantities	Unit	Local (Rs)		Foreign (US$)		Remarks
					Rate	Amount	Rate	Amount	
1	PC foreman		0.5	day	6,169.41	3,084.71			
2	PC worker		1.2	〃	4,627.06	5,552.47			
3	Labor		3	〃	904.14	2,712.42			
4	Sundries					895.10			33% of labor cost
	Net cost					12,244.70	Rs		

* P901 Standard unit outputs, Ministry of Work, Japan

76-3 DRAW BACK OF TRAVELING FORM (PER 10M)

No.	Description	Specification	Quantities	Unit	Local (Rs)		Foreign (US$)		Remarks
					Rate	Amount	Rate	Amount	
	PC foreman		0.5	day	6,169.41	3,084.71			
	PC worker		1.1	〃	4,627.06	5,089.76			
	Labor		1.1	〃	904.14	994.56			
	Net cost					9,169.03			
						916.90	Rs/m		

* P901 Standard unit outputs, Ministry of Work, Japan

SP40 5c1 **INSTALLATION OF LONGITUDINAL PC CABLE, 12S-15.2mm, INCLUDING GROUTING (PER 100M)** **Approach Bridge**

No.	Description	Specification	Quantities	Unit	Local (Rs)		Foreign (US$)		Remarks
					Rate	Amount	Rate	Amount	
1	PC foreman		1.4	manday	6,169.41	8,637.18			
2	PC worker		7.1	〃	4,627.06	32,852.12			
3	Scaffold worker		0.1	〃	1,082.47	108.25			
4	Labor		5.9	〃	904.14	5,334.44			
5	PC strand	12S-15.2mm	1.374	ton	85,000.00	116,790.00			Including loss
6	Sundry expenses (sheath, grout material, hiring charge of grout pump and mixer, welding machine, etc.)					12,671.63			27% of labor cost
	Net cost					176,393.61			
	Site-on-cost, overhead & profit	35.880%				63,290.03	Rs		
	Total					174,442.24	Rs/m		

Note:

Net cost
128,379.63 Rs/ton

* P872 Standard unit outputs, Ministry of Work, Japan

SP405c2 STRESSING LONGITUDINAL CABLE, 12S-15.2mm, INCLUDING INSTALLATION OF ANCHORAGE (PER 10 CABLE)

Approach Bridge

No.	Description	Specification	Quantities	Unit	Local (Rs)		Foreign (US$)		Remarks
					Rate	Amount	Rate	Amount	
1	PC foreman		2.3	manday	6,169.41	14,189.65			
2	PC worker		10	〃	4,627.06	46,270.59			
3	Carpenter		3.3	〃	1,455.34	4,802.63			
4	Labor		12.8	〃	904.14	11,573.01			
5	Live End Anchorage		20	nr	4,111.00	82,220.00			
6	Sundry expenses (formwork, grout horse, etc.)					11,525.38			15% of labor cost
7	Cost of jack		10	each	3,552.76	35,527.64			
8	Cost of grout pump/mixer		10	each	670.15	6,701.54			
	Net cost					212,810.44			
	Site-on-cost, overhead & profit	35.880%				76,356.39	Rs		
	Total					14,458.34	Rs/m		

Note: Stressing from both side

Net cost

10,640.52 Rs/each

* P872 Standard unit outputs, Ministry of Work, Japan

SP40 5d1 **INSTALLATION OF LONGITUDINAL PC CABLE, 12S-15.2mm, INCLUDING GROUTING (PER TON)** **Naluchi Bridge**

No.	Description	Specification	Quantities	Unit	Local (Rs)		Foreign (US$)		Remarks
					Rate	Amount	Rate	Amount	
1	PC foreman		3.9	manday	6,169.41	24,060.71			
2	PC worker		19.3	〃	4,627.06	89,302.24			
3	Labor		27	〃	904.14	24,411.82			
4	PC strand	12S-15.2mm	1.06	ton	85,000.00	90,100.00			
5	Rough terrain crane, 35t		0.6	day	13,235.29	7,941.18			
6	Fuel		70.04	liter	38.05	2,665.02			
7	Sundry expenses (sheath, grout material, hiring charge of grout pump and mixer, welding machine, etc.)					20,666.21			15% of labor cost
8	**Cost of tower crane**		1	ton	1,388.71	1,388.71			
	Net cost					260,535.89			
	Site-on-cost, overhead & profit	35.880%				93,480.28	Rs		
	Total					35,401.62	Rs/m		

Note: Total weight of cable 168.9 t

Net cost
260,535.89 Rs/ton

*** P749 Standard unit outputs, Japan Machinery Association**

SP40
5d5

INSTALLATION OF TRANSVERSE PC CABLE, 4S- 15.2mm INCLUDING GROUTING (PER TON)

Naluchi Bridge

No.	Description	Specification	Quantities	Unit	Local (Rs)		Foreign (US$)		Remarks
					Rate	Amount	Rate	Amount	
1	PC foreman		4.6	manday	6,169.41	28,379.29			
2	PC worker		21.5	〃	4,627.06	99,481.76			
3	Labor		35.6	〃	904.14	32,187.44			
4	PC strand	4S-15.2	1.06	ton	85,000.00	90,100.00			
5	Rough terrain crane, 35t		0.6	day	13,235.29	7,941.18			
6	Fuel		70.04	liter	38.05	2,665.02			
7	Sundry expenses (sheath, grout material, hiring charge of grout pump and mixer, welding machine, etc.)					24,007.28			15% of labor cost
8	**Cost of tower crane**		1	ton	1,388.71	1,388.71			
	Net cost					286,150.68			
	Site-on-cost, overhead & profit	35.880%				102,670.86	Rs		
	Total					388,821.55	Rs/m		

Note:

Net cost

0.00 Rs/ton 286,150.68 Rs/ton

* P902 Standard unit outputs, Ministry of Work, Japan

SP40
5d8

INSTALLATION OF TRANSVERSE PC CABLE, 12S-15.2mm, INCLUDING GROUTING (PER TON)

Naluchi Bridge

No.	Description	Specification	Quantities	Unit	Local (Rs)		Foreign (US$)		Remarks
					Rate	Amount	Rate	Amount	
1	PC foreman		3.9	manday	6,169.41	24,060.71			
2	PC worker		19.3	〃	4,627.06	89,302.24			
3	Labor		27	〃	904.14	24,411.82			
4	PC strand	12S-15.2mm	1.06	ton	85,000.00	90,100.00			
5	Rough terrain crane, 35t		0.6	day	13,235.29	7,941.18			
6	Fuel		70.04	liter	38.05	2,665.02			
7	Sundry expenses (sheath, grout material, hiring charge of grout pump and mixer, welding machine, etc.)					20,666.21			15% of labor cost
8	**Cost of tower crane**		1	ton	1,388.71	1,388.71			
	Net cost					260,535.89			
	Site-on-cost, overhead & profit	35.880%				93,480.28	Rs		
	Total					354,016.16	Rs/m		

Note:

Net cost
260,535.89 Rs/ton

*** P749 Standard unit outputs, Japan Machinery Association**

SP41
4a1

INSTALLATION OF STAY CABLE, 19S-15.2mm (PER TON)

Naluchi Bridge

No.	Description	Specification	Quantities	Unit	Local (Rs)		Foreign (US$)		Remarks
					Rate	Amount	Rate	Amount	
1	PC worker		5.35	day	4,627.06	24,754.76			-0.0015*500+6.1
2	Labor		2.6	〃	904.14	2,350.77			-0.0008*500+3.0
3	Tools		1	LS		1,355.28			5% of labor cost
4	Stay cable, 19S-15.2mm		1.06	ton	405,622.00	429,959.32			
5	**Cost of tower crane**		1	ton	1,388.71	1,388.71			
	Net cost					459,808.84			
	Site-on-cost, overhead & profit	35.880%				164,979.41	Rs		
	Total					624,788.25	Rs/m		

Note:

Net cost
459,808.84 Rs/ton

* Manual by PC Association, Japan

SP41
4a2

INSTALLATION OF STAY CABLE, 27S-15.2mm (PER TON)

Naluchi Bridge

No.	Description	Specification	Quantities	Unit	Local (Rs)		Foreign (US$)		Remarks
					Rate	Amount	Rate	Amount	
1	PC worker		5.05	day	4,627.06	23,366.65			-0.0015*700+6.1
2	Labor		2.44	〃	904.14	2,206.11			-0.0008*700+3.0
3	Tools		1	LS		1,278.64			5% of labor cost
4	Stay cable, 27S-15.2mm		1.06	ton	405,622.00	429,959.32			
5	**Cost of tower crane**		1	ton	1,388.71	1,388.71			
	Net cost					458,199.42			
	Site-on-cost, overhead & profit	35.880%				164,401.95	Rs		
	Total					622,601.37	Rs/m		

Note:

Net cost
458,199.42 Rs/ton

* Manual by PC Association, Japan

No.	Description	Specification	Quantities	Unit	Local (Rs)		Foreign (US$)		Remarks
					Rate	Amount	Rate	Amount	
1									
2									
3									

SP40 5d3 **INSTALLATION OF DEAD END ANCHORAGE FOR LONGITUDINAL PC CABLE, 12S-15.2mm, (PER 10 ANCHORS)**

Naluchi Bridge

No.	Description	Specification	Quantities	Unit	Local (Rs)		Foreign (US$)		Remarks
					Rate	Amount	Rate	Amount	
1	PC worker		3.5	manday	4,627.06	16,194.71			
2	Live End Anchorage	12S-15.2	10	nr	4,111.00	41,110.00			
3	Sundry expenses (formwork, grout horse, etc.)					2,429.21			18% of labor cost
	Net cost					59,733.91			
	Site-on-cost, overhead & profit	35.880%				21,432.53	Rs		
	Total					8,116.64	Rs/m		

Note: Stressing from one sides

Net cost
5,973.39 Rs/each

*** P751 Standard unit outputs, Japan Machinery Association**

STRESSING LONGITUDINAL PC CABLE, 12S-15.2MM (PER 10 ANCHORS) **Naluchi Bridge**

No.	Description	Specification	Quantities	Unit	Local (Rs)		Foreign (US$)		Remarks
					Rate	Amount	Rate	Amount	
1	PC foreman		2	manday	6,169.41	12,338.82			
2	PC worker		9.5	〃	4,627.06	43,957.06			
3	Labor		12	〃	904.14	10,849.70			
4	Live End Anchorage	12S-15.2	10	nr	4,111.00	41,110.00			
5	Sundry expenses (formwork, grout horse, etc.)					4,028.73			6% of labor cost
	Net cost					112,284.32			
	Site-on-cost, overhead & profit	35.880%				40,287.61	Rs		
	Total					15,257.19	Rs/m		

Note: From one side

Net cost
11,228.43 Rs/anchor

*** P751 Standard unit outputs, Japan Machinery Association**

SP40 5d2 **STRESSING LONGITUDINAL PC CABLE, 12S-15.2mm, INCLUDING INSTALLATION OF LIVE END ANCHORAGE (PER 10 ANCHORS)**

Naluchi Bridge

No.	Description	Specification	Quantities	Unit	Local (Rs)		Foreign (US$)		Remarks
					Rate	Amount	Rate	Amount	
1	PC foreman		1.5	manday	6,169.41	9,254.12			
2	PC worker		7.8	〃	4,627.06	36,091.06			
3	Labor		8.6	〃	904.14	7,775.62			
4	Live End Anchorage	12S-15.2	10	nr	4,111.00	41,110.00			
5	Sundry expenses (formwork, grout horse, etc.)					3,187.25			6% of labor cost
6	Cost of jack		10	each	3,552.76	35,527.64			
7	Cost of grout pump/mixer		10	each	670.15	6,701.54			
	Net cost					139,647.22			
	Site-on-cost, overhead & profit	35.880%				50,105.42	Rs		
	Total					18,975.26	Rs/m		

Note: From both sides — Net cost

Total number of anchorage 248 each — 13,964.72 Rs/anchor

*** P751 Standard unit outputs, Japan Machinery Association**

SP405d6 STRESSING TRANSVERSE PC CABLE 4S-15.2 mm, INCLUDING INSTALLATION OF LIVE END ANCHORAGE (PER 10 ANCHORS)

Naluchi Bridge

No.	Description	Specification	Quantities	Unit	Local (Rs)		Foreign (US$)		Remarks
					Rate	Amount	Rate	Amount	
1	PC foreman		0.7	manday	6,169.41	4,318.59			
2	PC worker		3.1	〃	4,627.06	14,343.88			
3	Labor		1.8	〃	904.14	1,627.45			
4	Live End Anchorage	4S-15.2	10	nr	1,224.00	12,240.00			
5	Sundry expenses (formwork, grout horse, etc.)			LS		2,637.69			13% of labor cost
6	Cost of jack		10	each	680.63	6,806.26			
7	Cost of grout pump/mixer		10	each	670.15	6,701.54			
	Net cost					48,675.42			
	Site-on-cost, overhead & profit	35.880%				17,464.74	Rs		
	Total					6,614.02	Rs/m		

Note: From one side

Net cost
4,867.54 Rs/anchor

* P903 Standard unit outputs, Ministry of Work, Japan

SP40 5d7 **INSTALLATION OF DEAD END ANCHORAGE FOR TRANSVERSE PC CABLE, 4S-15.2mm (PER 10 ANCHORS)**

Naluchi Bridge

No.	Description	Specification	Quantities	Unit	Local (Rs)		Foreign (US$)		Remarks
					Rate	Amount	Rate	Amount	
1	PC worker		1.2	manday	4,627.06	5,552.47			
2	Dead end anchor	4S-15.2	10	nr	1,224.00	12,240.00			
3	Sundry expenses (formwork, grout horse, etc.)			LS		7,294.91			41% of labor cost
	Net cost					25,087.38			
	Site-on-cost, overhead & profit	35.880%				9,001.35	Rs		
	Total					3,408.87	Rs/m		

Net cost
2,508.74 Rs/anchor

* P903 Standard unit outputs, Ministry of Work, Japan

SP41
4b1

STRESSING STAY CABLE , 19S-15.2 (PER 10 ANCHORS)

Naluchi Bridge

No.	Description	Specification	Quantities	Unit	Local (Rs)		Foreign (US$)		Remarks
					Rate	Amount	Rate	Amount	
1	PC foreman		2	manday	6,169.41	12,338.82			
2	PC worker		12.8	manday	4,627.06	59,226.35			
3	labor		8.6	manday	904.14	7,775.62			
4	Anchorage including all fittings		10	set	69,676.20	696,762.00			
5	Steel pipe	165.2mm	20	m	1,437.39	28,747.71			2m/each
6						4,760.45			6% of labor cost
7	Cost of jack		10	each	260,304.00	2,603,040.00			
	Net cost					3,412,650.95			
	Site-on-cost, overhead & profit	35.880%				1,224,459.16	Rs		
	Total					463,711.01	Rs/m		

Net cost
341,265.10 Rs/anchor

SP41
4b2

STRESSING OF STAY CABLE , 27S-15.2 (PER 10 ANCHOR)

Naluchi Bridge

No.	Description	Specification	Quantities	Unit	Local (Rs)		Foreign (US$)		Remarks
					Rate	Amount	Rate	Amount	
1	PC foreman		2	manday	6,169.41	12,338.82			
2	PC worker		14.8	manday	4,627.06	68,480.47			
3	labor		10.6	manday	904.14	9,583.90			
4	Anchorage including all fittings		10	set	133,446.60	1,334,466.00			
5	Others					5,424.19			6% of labor cost
6	Steel pipe	165.2mm	20	m	1437.3856	28,747.71			2m/each
7	Cost of jack		10	each	260,304.00	2,603,040.00			
	Net cost					4,062,081.10			
	Site-on-cost, overhead & profit	35.880%				1,457,474.70	Rs		
	Total					551,955.58	Rs/m		

Net cost
406,208.11 Rs/anchor

SP40
5d11

INSTALLATION OF PC BAR, 32mm, INCLUDING GROUTING (PER TON)

Naluchi Bridge

No.	Description	Specification	Quantities	Unit	Local (Rs)		Foreign (US$)		Remarks
					Rate	Amount	Rate	Amount	
1	PC foreman		1.7	manday	6,169.41	10,488.00			
2	PC worker		14.9	〃	4,627.06	68,943.18			
3	Labor		20	〃	904.14	18,082.83			
4	PC bar	32mm	1.0	t	471,000.00	471,000.00			
5	Rough terrain crane		0.5	day	13,235.29	6,617.65			
6	Fuel		58.4	liter	38.05	2,220.85			
7	Sundry expenses (Sheath, grout material, etc.)					6,825.98			7% of labor cost
	Net cost					584,178.49			
	Site-on-cost, overhead & profit	35.880%				209,603.24	Rs		
	Total					793,781.73	Rs/m		

Net cost
584,178.49 Rs/ton

* P902 Standard unit outputs, Ministry of Work, Japan

SP40
5d12 **STRESSING PC BAR, 32mm INCLUDING INSTALLATION OF LIVE END ANCHORAGE (PER 10 ANCHORS)** **Naluchi Bridge**

No.	Description	Specification	Quantities	Unit	Local (Rs)		Foreign (US$)		Remarks
					Rate	Amount	Rate	Amount	
1	PC foreman		0.7	manday	6,169.41	4,318.59			
2	PC worker		3.3	〃	4,627.06	15,269.29			
3	Labor		4	〃	904.14	3,616.57			
4	Live End Anchorage	26mm	10.0	nr	21,300.00	213,000.00			
5	Sundry expenses (grout horse, etc.)					928.18			4% of labor cost
6	Cost of jack		10	each	2,922.08	29,220.78			
7	Cost of grout pump /juck		10	each	670.15	6,701.54			
	Net cost					273,054.95			
	Site-on-cost, overhead & profit	35.880%				97,972.12	Rs		
	Total					37,102.71	Rs/m		

Net cost
27,305.50 Rs/anchor

* P902 Standard unit outputs, Ministry of Work, Japan

SP40
5d13

INSTALLATION OF DEAD END ANCHORAGE FOR PC BAR, 32mm (PER 10 ANCHOR)

Naluchi Bridge

No.	Description	Specification	Quantities	Unit	Local (Rs)		Foreign (US$)		Remarks
					Rate	Amount	Rate	Amount	
1	PC worker		1.2	manday	4,627.06	5,552.47			
2	Dead End Anchorage	32mm	10.0	nr	16,460.00	164,600.00			
3	Sundry expenses (grout horse, etc.)					1054.96941			19% of labor cost
	Net cost					171,207.44			
	Site-on-cost, overhead & profit	35.880%				61,429.23	Rs		
	Total					23,263.67	Rs/m		

Net cost
17120.74 Rs/anchor

* P902 Standard unit outputs, Ministry of Work, Japan

SP40
5d14 **JOINTING PC BAR, 32mm (PER 10 JOINT)** **Naluchi Bridge**

No.	Description	Specification	Quantities	Unit	Local (Rs)		Foreign (US$)		Remarks
					Rate	Amount	Rate	Amount	
1	PC foreman		0.4	manday	6,169.41	2,467.76			
2	PC worker		1.4	〃	4,627.06	6,477.88			
3	Labor		1.6	〃	904.14	1,446.63			
4	Coupler	32mm	10.0	nr	4,860.00	48,600.00			
5	Sundry expenses (grout horse, etc.)					623.54			6% of labor cost
	Net cost					59,615.81			
	Site-on-cost, overhead & profit	35.880%				21,390.15	Rs		
	Total					8,100.60	Rs/m		

Net cost
5,961.58 Rs/joint

* P902 Standard unit outputs, Ministry of Work, Japan

SP40 5e1 **INSTALLATION OF LONGITUDINAL PC CABLE INCLUDING GROUTING, 12S-15.2mm (PER 100M)** **Viaduct**

No.	Description	Specification	Quantities	Unit	Local (Rs)		Foreign (US$)		Remarks
					Rate	Amount	Rate	Amount	
1	PC foreman		2.3	manday	6,169.41	14,189.65			
2	PC worker		10.8	〃	4,627.06	49,972.24			
3	Scaffold worker		0.2	〃	1,082.47	216.49			
4	Labor		15.2	〃	904.14	13,742.95			
5	PC cable	12S-15.2mm	1.374	ton	85,000.00	116,790.00			
6	Sundry expenses (Sheath, grout material, etc.)					21,440.25			11% on (labour+material cost
	Net cost					216,351.58			
	Site-on-cost, overhead & profit	35.880%				77,626.95	Rs		
	Total					213,958.17	Rs/m		

Net cost
157,461.12 Rs/ton

* P881 Standard unit outputs, Ministry of Work, Japan

SP40
5e7

INSTALLATION OF TRANSVERSE PC CABLE INCLUDING GROUT, 3S-15.2mm (PER 100M)

Viaduct

No.	Description	Specification	Quantities	Unit	Local (Rs)		Foreign (US$)		Remarks
					Rate	Amount	Rate	Amount	
1	PC foreman		0.7	manday	6,169.41	4,318.59			
2	PC worker		3.4	〃	4,627.06	15,732.00			
3	Scaffold worker		0.1	〃	1,082.47	108.25			
4	Labor		4.8	〃	904.14	4,339.88			
5	PC cable	3S-15.2mm	0.338	ton	85,000.00	28,687.50			
6	Sundry expenses (Sheath, grout material, etc.)					8,509.79			16% on (labour+material cost
	Net cost					61,696.01			
	Site-on-cost, overhead & profit	35.880%				22,136.53	Rs		
	Total					248,392.71	Rs/m		

Net cost
182,802.99 Rs/ton

0.338 ton/100m

* P881 Standard unit outputs, Ministry of Work, Japan

SP40 5e2 **STRESSING LONGITUDINAL PC CABLE, 12S-15.2mm, INCLUDING INSTALLATION OF LIVE END ANCHORAGES (per 10 cables), STRESSING FROM BOTH ENDS**

Viaduct

No.	Description	Specification	Quantities	Unit	Local (Rs)		Foreign (US$)		Remarks
					Rate	Amount	Rate	Amount	
1	PC foreman		1.9	manday	6,169.41	11,721.88			
2	PC worker		11.7	〃	4,627.06	54,136.59			
3	Carpenter		3.5	〃	1,455.34	5,093.70			
4	Labor		14	〃	904.14	12,657.98			
5	Live End Anchorage	12S-15.2mm	10	nr	4,111.00	41,110.00			
6	Dead End Anchorage	12S-15.2mm	10	nr	4,111.00	41,110.00			
7	Sundry expenses (Grid, etc.)					13,377.62			16% of labor
8	Cost of jack		10	each	3,552.76	35,527.64			
9	Cost of grout pump /mixer		10	each	670.15	6,701.54			
	Net cost					221,436.96			
	Site-on-cost, overhead & profit	35.880%				79,451.58	Rs		
	Total					15,044.43	Rs/m		

Note: Stressing from both ends

Net cost
22,143.70 Rs/anchor

* P881 Standard unit outputs, Ministry of Work, Japan

SP40 5e8 **STRESSING TRANSVERSE PC CABLE , 3S-15.2mm INCLUDING INSTALLATION OF LIVE END ANCHORAGE AND DEAD END ANCHORAGE (per 10 cables), STRESSING FROM ONE END**

Viaduct

No.	Description	Specification	Quantities	Unit	Local (Rs)		Foreign (US$)		Remarks
					Rate	Amount	Rate	Amount	
1	PC foreman		0.3	manday	6,169.41	1,850.82			
2	PC worker		1.7	〃	4,627.06	7,866.00			
3	Carpenter		0.7	〃	1,455.34	1,018.74			
4	Labor		1.8	〃	904.14	1,627.45			
5	Live End Anchorage	3S-15.2mm	10	nr	1,200.00	12,000.00			
6	Dead End Anchorage	3S-15.2mm	10	〃	1,200.00	12,000.00			
7	Sundry expenses (Grid, etc.)					2,101.71			17% of labor
8	Cost of jack		10	each	680.63	6,806.26			
9	Cost of grout pump/mixer		10	each	670.15	6,701.54			
	Net cost					51,972.53			
	Site-on-cost, overhead & profit	35.880%				18,647.74	Rs		
	Total					7,062.03	Rs/m		

Note: Stressing from one end

Net cost
5,197.25 Rs/anchor

* P881 Standard unit outputs, Ministry of Work, Japan

SP40
5e4

JOINTING LONGITUDINAL PC CABLE, 12S-15.2mm (PER JOINT)

Viaduct

No.	Description	Specification	Quantities	Unit	Local (Rs)		Foreign (US$)		Remarks
					Rate	Amount	Rate	Amount	
1	PC foreman		0.08	manday	6,169.41	474.57			1/D × 1
2	PC worker		0.15	〃	4,627.06	711.86			1/D × 2
3	Labor		0.15	〃	904.14	139.10			1/D × 2
4	Coupler	12S-15.2mm	1	nr	31,212.00	31,212.00			
5	Sundry expenses (grout horse, etc.)					79.53			6% of labor cost
	Net cost					32,617.06			
	Site-on-cost, overhead & profit	35.880%				11,703.00	Rs		
	Total					44,320.06	Rs/m		

Number of joint per day, D = 13 joints

Net cost
32,617.06 Rs/joint

* P872 Standard unit outputs, Ministry of Work, Japan

SP313

BRIDGE DECK WATERPROOFING (PER 100M^2)

No.	Description	Specification	Quantities	Unit	Local (Rs)		Foreign (US$)		Remarks
					Rate	Amount	Rate	Amount	
1	Foreman		0.20	manday	2,784.71	556.94			1×100/D
2	Skilled labor		0.80	〃	985.20	788.16			4×100/D
3	Labor		0.20	〃	904.14	180.83			1×100/D
4	Primer		6.19	can	4,909.60	30,381.19			500*0.2/(16*1.01)
5	Membrane		37.04	roll	1,033.60	38,281.48			500/13.5
6	Drain pipe	18mm	33.5	m	100	3,350.00			33.5m/100m^2
7	Others					686.63			1% of primer and membrane
	Net cost					74,225.23			
	Site-on-cost, overhead & profit	35.880%				26,632.01	Rs		
	Total					1,008.57	Rs/m		

Average area of apply per day, D= 500 m^2

Net cost 742.25 Rs/m^2

Total bridge deck area to be applied 6,156 m^2

P392
P391

Primer, 0.20 litre/m^2 ¥9,200 per 16 liter can
Membrane, 2mmx1mx15m, 31kg ¥1,200 per roll

Membrane, 1×15×0.9 = 13.5m^2/roll 456 rolls 14.14 t
Primer =6158×0.20×1.01/16= 77.7 cans 1.24 t

97 HIRING CHARGE OF CONCRETE BATCHING PLANT

No.	Description	Specification	Quantities	Unit	Local (Rs)		Foreign (US$)		Remarks
					Rate	Amount	Rate	Amount	
1	Hiring charge of concrete batching plant (per m^3 of concrete)	$30m^3/hr$	30	month	400,000.00	###########			
2	Generator	100kW	30	month	100,000.00	3,000,000.00			
2	Concrete		10	m^3	5,061.02	50,610.20			10mx5mx0.2m
3	Reinforcement		0.5	t	55,586.00	27,793.00			0.05t/m3
4	Rough terrain crane for erection and dismantling		6	day	13,235.29	79,411.76			
5	Fuel		700.4	liter	38.05	26,650.22			
6	Mechanic		20	manday	1,455.34	29,106.84			
7	labor		10	manday	904.14	9,041.42			
8	Demolition of concrete foundation	$0.6m^3$ backhoe	0.5	day	9926.470588	4,963.24			
9	Fuel		40.34	liter	38.05	1,535.10			
10	Others								10% of equipment cost
					Total	###########	Rs		

Hiring cost can be spread over the concrete rate.

Total concrete volume for Naluchi Bridge

12321.9

Cost per m^3 1,235.94 Rs/m^3

98 HIRING CHARGE OF CONCRETE PUMP

No.	Description	Specification	Quantities	Unit	Local (Rs)		Foreign (US$)		Remarks
					Rate	Amount	Rate	Amount	
1	Hiring charge of tower crane	$45m^3/h$	10	month	175,000.00	1,750,000.00			
					Total	1,750,000.00	Rs		

Concrete volume for superstructure by cantilever erection

4230.7 m^3

cost per m^3 413.64 Rs/m^3

99 INSTALLATION OF ANCHOR FOR WATER SUPPLY BRACKET (PER ONE)

No.	Description	Specification	Quantities	Unit	Local (Rs)		Foreign (US$)		Remarks
					Rate	Amount	Rate	Amount	
	Anchor	M16x200	1	set	35.19	35.19			
	Skilled labor		0.04	manday	985.20	39.41			
	Net cost					74.60			

100 INSTALLATION OF BRACKET FOR WATER SUPPLY

No.	Description	Specification	Quantities	Unit	Local (Rs)		Foreign (US$)		Remarks
					Rate	Amount	Rate	Amount	
	Type A								
	Bracket		1	set	8,239.32	8,239.32			
	Installation	skilled labor	0.1	man day	985.20	98.52			
	Installation of anchor		2	each	74.60	149.20			
	Net cost					8,487.04	Rs		
						11,397.16	Rs		
	Type B								
	Bracket		1	set	9,757.89	9,757.89			
	Installation	skilled labor	0.1	man day	985.20	98.52			
	Installation of anchor		2	each	74.60	149.20			
	Net cost					10,005.61	Rs		
						13,436.43	Rs		
	Type C								
	Bracket		1	set	4,883.00	4,883.00			
	Installation	skilled labor	0.1	man day	985.20	98.52			
	Installation of anchor		0	each	74.60	0.00			
	Net cost					4,981.52	Rs		
						6,689.63	Rs		
	Type D								
	Bracket		1	set	10,931.00	10,931.00			
	Installation	skilled labor	0.1	man day	985.20	98.52			
	Installation of anchor		3	each	74.60	223.79			
	Net cost					11,253.31	Rs		
						15,111.96	Rs		

101 NON SHRINK MORTAR (PER M ^{3})

No.	Description	Specification	Quantities	Unit	Local (Rs)		Foreign (US$)		Remarks
					Rate	Amount	Rate	Amount	
	Cement		1.3038	ton	6,100.00	7,953.18			
	Admixture	Convex	5.8671	kg	2,488.80	14,602.04			0.45%
	Net cost					22,555.22	Rs/m^3		

SP60
6c

INSTALLATION OF STEEL RAILING

No.	Description	Specification	Quantities	Unit	Local (Rs)		Foreign (US$)		Remarks
					Rate	Amount	Rate	Amount	
1	Foreman		0.30	manday	2,784.71	835.41			
2	Skilled labor		2.00	〃	985.20	1,970.40			
3	Labor		2.00	〃	904.14	1,808.28			
4	Steel railing		30.00	m	15,000.00	450,000.00			
5	Others					4,500.00			1% of railing
	Net cost					459,114.10			
	Site-on-cost, overhead & profit	35.880%				164,730.14	Rs		
	Total					20,794.81	Rs/m		

Installation per day 30 m

Bolt to be embedded in concrete

Net cost 15,303.80 Rs/m

SP61
5a

STAIR TO NALUCHI BRIDGE DECK AT PIER 2

No.	Description	Specification	Quantities	Unit	Local (Rs)		Foreign (US$)		Remarks
					Rate	Amount	Rate	Amount	
	Excavation		63.7	m^3	133.784				
	Foundation bedding		18.2	m^3	919.852823				
	Reinforcing bar		2.38	ton	64,035.74				
	Concrete Class A1		32.7	m^3	5,817.75				
	Formwork		85	m^2	985.8973847				
	Backfilling		47.8	m^3	155.238322				
	Fabrication of stair		0.9	ton	76,500	68,850.00			¥150,000
	Installation	labor	10	manday	985.20	9,852.01			10 manday/ton
	Net cost					78,702.01	Rs		

P16-24 Standard Output, JHA Japan

SP61
5b

STAIR TO NALUCHI BRIDGE DECK AT PIER 4

No.	Description	Specification	Quantities	Unit	Local (Rs)		Foreign (US$)		Remarks
					Rate	Amount	Rate	Amount	
	Excavation		255.8	m^3	133.78	34,221.95			107a
	Soil cement stabilization								
	Cement		19	t	6,100.00	115,900.00			
	Backhoe	$0.6m^3$	3	day	18,602.05	55,806.14			E28
	Vibrating roller	3-4t	3	day	7,795.02	23,385.06			E25
	Labor		9	manday	904.14	8,137.27			
	Leveling concrete		9.6	m^3	5,448.32	52,303.92			
	Reinforcing bar		4	ton	64,035.74	256,142.97			
	Concrete Class A1		92.8	m^3	5,817.75	539,886.82			
	Formwork		119.7	m^2	985.90	118,011.92			
	Backfilling		152.8	m^3	155.24	23,720.42			
	Fabrication of stair		73.2	ton	81,600.00	5,973,120.00			¥160,000
	Installation								
	Bridge foreman		1	manday	2,784.71	2,784.71			
	Bridge worker		4	manday	1,082.47	4,329.88			10% of the labor cost
	Rough terrain crane	35t	2	day	13,235.29	26,470.59			
	Fuel		233.47	liter	38.05	8,883.41			20days
	Others					711.46			
	Scaffolding		m^3	14,970.00	1.44970798	21,702.13			998 × 15days
	Net cost					7,265,518.65			
Unit Price (entered in a tender BOQ)			Local Cost (Rs)			Foreign Cost (US$)			

* P911 Standard unit outputs, Ministry of Work, Japan

104 SPREADING COST OF TOWER CRANE

	Cost of tower	8,892,755.43	Rs						
	Reinforcing bar	1,012.73	ton	PC box, pylon					
	Concrete	4,230.70	m^3	PC box, pylon					
	PC cable	287.00	ton						
	Formwork	873.20	m^2	Pylon, pier table, end block					
		6,403.63	unit						
	Unit cost to be spread over above work	1,388.71	Rs/unit						

404b(vi) **MECHANICAL JOINT (TYPE 4) (1/2)**

No.	Description	Specification	Quantities	Unit	Local (Rs)		Foreign (US$)		Remarks
					Rate	Amount	Rate	Amount	
	D32								
	Coupler		1	nr	1,183.20	1,183.20			¥2,320
	Steel fixer		0.06	manday	1,455.34	87.32			(1/80)×4+1/100
	Others			LS		177.48			15% of material
	Net cost					1,448.00			
	D29								
	Coupler		1	nr	877.20	877.20			¥1,720
	Steel fixer		0.06	manday	1,455.34	87.32			(1/80)×4+1/100
	Others			LS		131.58			15% of material
	Net cost					1,096.10			
	D25								
	Coupler		1	nr	714.00	714.00			¥1,400
	Steel fixer		0.06	manday	1,455.34	87.32			(1/80)×4+1/100
	Others			LS		107.1			15% of material
	Net cost					908.42			
	D22								
	Coupler		1	nr	591.60	591.60			¥1,160
	Steel fixer		0.06	manday	1,455.34	87.32			(1/80)×4+1/100
	Others			LS		88.74			15% of material
	Net cost					767.66			
	D19								
	Coupler		1	nr	540.60	540.60			¥1,060
	Steel fixer		0.06	manday	1,455.34	87.32			(1/80)×4+1/100
	Others			LS		81.09			15% of material
	Net cost					709.01			
	D16								
	Coupler		1	nr	474.30	474.30			¥930
	Steel fixer		0.06	manday	1,455.34	87.32			(1/80)×4+1/100
	Others			LS		71.145			15% of material
	Net cost					632.77			
	P13-31 Standard Output, JHA Japan								
	Price book P14								

404b(vi) MECHANICAL JOINT (TYPE 4) (2/2)

No.	Description	Specification	Quantities	Unit	Local (Rs)		Foreign (US$)		Remarks
					Rate	Amount	Rate	Amount	
	D32		662	nr	1,448.00	958,576.35			
	D29			nr	1,096.10	0.00			
	D25		4602	nr	908.42	4,180,551.27			
	D22			nr	767.66	0.00			
	D19			nr	709.01	0.00			
	D16			nr	632.77	0.00			
			5264						
	Net cost					5,139,127.62			
						976.28	Rs/nr		

P13-31 Standard Output, JHA Japan
Price book P14

2 SITE STAFF SALARY AND EXPENSES

No.	Description	Specification	Quantities	Unit	Local (Rs)		Foreign (US$)		Remarks
					Rate	Amount	Rate	Amount	
1	Site agent	1	33	month			7,475	246,675	Expatriate
2	Office manager	1	33	〃			5,750	189,750	Expatriate
3	Civil engineer 1	1	27	〃			6,900	186,300	Expatriate
4	Civil engineer 2	1	32	〃			3,450	110,400	Asian
5	Civil engineer 3	1	20	〃			3,450	69,000	Asian
6	Bridge engineer 1	1	21	〃			6,900	144,900	Expatriate
7	Bridge engineer 2	1	18	〃			3,450	62,100	Asian
8	Bridge engineer 3	1	12	〃			3,450	41,400	Asian
9	Bridge engineer 4	1	9	〃	150,800.12	1,357,201			Pakistani
10	General foreman	1	32	〃	68,120.05	2,179,842			〃
11	Foreman,	2	32	〃	63,120.05	4,039,683			〃
12	Store keeper	1	32	〃	63,120.05	2,019,842			〃
13	Quantity surveyor	1	32	〃	72,306.72	2,313,815			〃
14	Material engineer	1	32	〃	123,240.10	3,943,683			〃
15	Technician	1	32	〃	86,493.40	2,767,789			〃
16	Surveyor	1	32	〃	95,680.07	3,061,762			〃
17	Chainman	2	64	〃	63,120.05	8,079,366			〃
18	CAD operator	1	30	〃	90,680.07	2,720,402			〃
19	Attendant labor	10	32	〃	20,493.88	6,558,041			〃
20	Watchman	8	32	〃	22,698.68	5,810,862			〃
21	Liaison officer in Islamabad	1	33	〃	81,493.40	2,689,282			〃
22	Driver	6	32	〃	26,373.35	5,063,683			〃
23	PC engineer	1	2	〃			6,900	13,800	〃
	Staff expenses								
	Net cost					52,605,253		1,064,325	117,316,213
									Combined (Rs)

Driver	
Supervisory vehicle	4
10t truck	1
4t truck with crane	1
Total	6

Watchman	
Office	2
Field office	6
Total	8

3 CONTRACTOR'S SITE ONCOST

No.	Description	Specification	Quantities	Unit	Local (Rs)		Foreign (US$)		Remarks
					Rate	Amount	Rate	Amount	
	Non time related								
1	4-wheel pickup for supervisory work		4	nr	2,384,000	9,536,000			
2	Radio talkie		1	LS	120,000	120,000			
3	Telephone installation	2 lines	2	lines	2,500	5,000			
4	Electric supply for mobile houses	30kW	1	LS	50,000	50,000			
5	Contractor's office equipment		1	LS	550,000	550,000			
	Net cost					10,261,000			

4 CONTRACTOR'S SITE ONCOST

No.	Description	Specification	Quantities	Unit	Local (Rs)		Foreign (US$)		Remarks
					Rate	Amount	Rate	Amount	
	Time related								
1	Renting charge for accommodation/office		32	Month	150,000	4,800,000			
2	Mobile office (Renting)	6 Nos	32	〃	18,000	576,000			*1
3	General office expenditure		32	〃	20,000	640,000			
4	Telephone call		32	〃	100,000	3,200,000			
5	Electric supply		32	〃	50,000	1,600,000			
6	Bottle drinking water	21 liter	32	〃	115,000	3,680,000			*2
7	Protective clothing, helmets, shoes,		30	〃	30,000	900,000			
8	Small tools		30	〃	50,000	1,500,000			
9	Fuel and lubricant for supervisory vehicles		30	〃	126,833	3,805,000			*3
10	Lubricant		1	LS		190,250			5% of fuel
11	Renting office in Islamabad		32	〃	150000	4,800,000			
				Total		25,691,250			

*1 6 Nos × 3,000 Rs/month = 18,000 Rs/month

*2 10 bottles/day × 23day × 500 Rs/bottle = 115,000 Rs/month

*3 4-wheel pick-up

Mileage per month per vehicle	5,000	km
Average traveling kilometer per liter	6	km/liter
Fuel consumption per month	833	liter/vehicle
Cost per month for 4 vehicles	126,833	Rs/month

*4 Fuel for 10t truck
3,000km/6km/litre 500 liter/month

*5 Fuel for 4t truck with crane
2,000km/6km/litre 333 liter/month

SP41
3a

INSTALLATION OF TOWER FRAME (PER ONE SIDE)

No.	Description	Specification	Quantities	Unit	Local (Rs)		Foreign (US$)		Remarks
					Rate	Amount	Rate	Amount	
	Fabrication cost		4.81	ton	61,200.00	294,372.00			¥120,000
	Assembly and erection		4	block	16,653.88	66,615.50			108
	Net cost					360,987.50	Rs		

Note Total weight = 4.81 ton
Weight of one block for installation = 0.962 ton
Number of flame = 4

108 ASSEMBLY AND ERECTION OF TOWER FRAME (PER ONE BLOCK)

No.	Description	Specification	Quantities	Unit	Local (Rs)		Foreign (US$)		Remarks
					Rate	Amount	Rate	Amount	
	Bridge foreman		1	manday	2,784.71	2,784.71			
	Bridge worker		4	manday	1,082.47	4,329.88			
	Tower crane		0.5	day	16,146.96	8,073.48			
	Fuel		19.83	liter	38.05	754.34			
	Others					711.46			10% of the labor cost
	Net cost					16,653.88	Rs/block		

* P911 Standard unit outputs, Ministry of Work, Japan

SP41
3f

INSTALLATION OF SADDLE (PER ONE SIDE)

No.	Description	Specification	Quantities	Unit	Local (Rs)		Foreign (US$)		Remarks
					Rate	Amount	Rate	Amount	
	Fabrication cost		1	set	6,885,000.00	6,885,000.00			
	Assembly and erection		1	block	25,000.00	25,000.00			
	Others			LS		69,100.00			1% of the above
	Net cost					6,979,100.00	Rs		

Note Total weight = 7.3 ton

SP41
3c

INSTALLATION OF WALKWAY FOR INSPECTION

No.	Description	Specification	Quantities	Unit	Local (Rs)		Foreign (US$)		Remarks
					Rate	Amount	Rate	Amount	
	Fabrication cost		0.88	ton	66,300.00	58,344.00			¥130,000
	Assembly and erection	Skilled worker	8.8	manday	985.20	8,669.76			10×0.88
	Anchoring	M16x125	24	nr	115.91	2781.79253			
	Net cost					69,795.56	Rs		
	Installation of anchor per one								
	M16x125	Galvanized	1	nr	76.50	76.50			¥150
	Skilled labor		0.04	manday	985.20	39.41			
						115.91	Rs/anchor		

Note Total weight = 7.3 ton

* P904 Standard unit outputs, Ministry of Work, Japan

55-1 FOUNDATION OF SUPPORT

No.	Description	Specification	Quantities	Unit	Local (Rs)		Foreign (US$)		Remarks
					Rate	Amount	Rate	Amount	
	Compaction of original ground		2443.6	m^2	9.97	24,358.29			14.9*41*4span
	Leveling concrete		11.6	m^3	5,448.32	63,287.74			
	Reinforcing steel		1.44	ton	64,035.74	92,211.47			0.05t/m3
	Concrete Class A1-1		28.8	m^3	5,817.75	167,551.08			
	Formwork for foundation		57.6	m^2	985.90	56,787.69			
	Net cost					404,196.28			

Concrete, (2.0x2.0x0.3x3x2)x4 28.8
Leveling concrete (2.2x2.2x0.1x3x2)x4 11.6
Formwork (0.3x8.0xx3x2)x4 57.6

55-2 INSTALLATION AND DISMANTLING SUPPORT (PER 100M^3)

No.	Description	Specification	Quantities	Unit	Local (Rs)		Foreign (US$)		Remarks
					Rate	Amount	Rate	Amount	
	Bridge foreman		0.58	manday	2,784.71	1,615.13			
	Bridge worker		2.91	manday	1,082.47	3,149.99			
	labor		2.33	manday	904.14	2,106.65			
	Rough terrain crane		0.57	day	15,866.47	9,043.89			
	Cost of support		100	m^3		45,900.00			¥90,000
	Others		100	m^3		4,100.40			¥8,040
	Net cost					65,916.06			
						659.16	Rs/m^3		

* L =	41	m
H = h+A	10.8	m
A =	0.594	m
W =	13.9	m
h =	10.2	m
V = (W +2.4) × H × L × 2 =	14,435.3	m^3
	100	day
P=	44.5	kN/m^2

* P904 Standard unit outputs, Ministry of Work, Japan

55-3 INSTALLATION AND DISMANTLING H BEAM UNDER SUPPORT (PER 10M)

No.	Description	Specification	Quantities	Unit	Local (Rs)		Foreign (US$)		Remarks
					Rate	Amount	Rate	Amount	
	Bridge foreman		0.11	manday	2784.708	306.32			
	Bridge worker		0.34	manday	1082.47122	368.04			
	labor		0.24	manday	904.141657	216.99			
	Rough terrain crane		0.13	day	15,866.47	2,062.64			
	Cost of H beam		0.93	ton	239.30	222.55			
	Net cost					3,176.54			
						317.65	Rs/m		

* L = n ×(w+2.4) ×2	391.2	m
n =	12	nr
W =	13.9	m
Cost of H beam per ton/day		Rs
	100.0	days

* P904 Standard unit outputs, Ministry of Work, Japan

55-4 INSTALLATION AND DISMANTLING FLAME SUPPORT INCLUDING COST OF FLAME SUPPORT (PER 100M^3)

No.	Description	Specification	Quantities	Unit	Local (Rs)		Foreign (US$)		Remarks
					Rate	Amount	Rate	Amount	
	Bridge foreman		1.08	manday	2,784.71	3,007.48			
	Bridge worker		4.42	manday	1,082.47	4,784.52			
	labor		3.18	manday	904.14	2,875.17			
	Rough terrain crane		0.42	day	15,866.47	6,663.92			
	Cost of flame support		100	m^3	145.00	14,500.00			1.45*100
	Net cost					31,831.10			
						318.31	Rs/m^3		

* L =	43	m
H = 20-10.8	9.2	m
A =	0.594	m
W =	13	m
h =	10.2	m
V = (W +2.4) × H × L=	6,092.2	m^3
	100	day
P=	44.5	kN/m^2

* P904 Standard unit outputs, Ministry of Work, Japan

55-5 INSTALLATION AND DISMANTLING FOUNDATION STEEL SHEET PILE (PER 10M^2)

No.	Description	Specification	Quantities	Unit	Local (Rs)		Foreign (US$)		Remarks
					Rate	Amount	Rate	Amount	
	Bridge foreman		0.08	manday	2,784.71	222.78			
	Bridge worker		0.4	manday	1,082.47	432.99			
	labor		0.35	manday	904.14	316.45			
	Rough terrain crane		0.09	day	15,866.47	1,427.98			
	Cost of sheet pile		0.61	t	30,000.00	18,300.00			
	Net cost					20,700.20			
						2,070.02	Rs/m^2		

* P904 Standard unit outputs, Ministry of Work, Japan

55-6 INSTALLATION AND DISMANTLING COLUMN SUPPORT

No.	Description	Specification	Quantities	Unit	Local (Rs)		Foreign (US$)		Remarks
					Rate	Amount	Rate	Amount	
	Bridge foreman		12.2	manday	2,784.71	34,051.41			(T/D1)*1
	Bridge worker		61.1	manday	1,082.47	66,182.29			(T/D1)*5
	labor		12.2	manday	904.14	11,055.84			(T/D1)*1
	Rough terrain crane		12.2	day	15,866.47	194,015.20			
	Others					667.74			0.6% on labor cost
	Net cost					305,972.48	Rs		

Total weight, T= 80.2 t
D1=T/(0.14T+1.0) 6.6 t

* P832 Standard unit outputs, Ministry of Work, Japan

APPENDIX H-3

ANALYSIS OF UNIT RATES FOR PACKAGE II

(1) SCHEDULE OF UNIT RATES

ADJUSTED CSR 2006 RATES (Rs)

CODE	DESCRIPTION	UNIT	MANPOWER (1)	EQUIPMENT (2)	MATERIAL (3)	NET COST (4)=(1)+(2)+(3)	OH-PROFIT (5)=(4)*25%	ADJUSTED RATE (4)+(5)	REMARKS
101	CLEARING AND GRUBBING	SM	0.65	9.40	0	10.04	2.51	12.56	
102a	REMOVAL OF TREES 150-300mm GIRTH	EACH	7.09	156.67	1.08	164.83	41.21	206.03	
102b	REMOVAL OF TREES 301-600mm GIRTH	EACH	19.39	404.26	2.43	426.09	106.52	532.61	
102c	REMOVAL OF TREES 601mm OR OVER GIRTH	EACH	77.58	1,617.08	9.72	1,704.38	426.10	2,130.48	
103	STRIPPING	CM	2.55	84.83	0	87.38	21.85	109.23	
104	COMPACTION OF NATURAL GROUND	SM	0.38	8.83	0.76	9.97	2.49	12.46	
106a	EXCAVATE UNSUITABLE COMMON MATERIAL	CM	5.65	122.79	0.00	128.44	32.11	160.55	
106bi	EXCAVATE UNSUITABLE HARD ROCK MATERIAL	CM	142.46	281.97	51.74	476.17	119.04	595.21	
106bii	EXCAVATE UNSUITABLE MEDIUM ROCK MATERIAL	CM	18.45	296.56	0	315.02	78.75	393.77	
106biii	EXCAVATE UNSUITABLE SOFT ROCK MATERIAL	CM	12.20	231.93	0	244.13	61.03	305.17	
106c	EXCAVATE SURPLUS COMMON MATERIAL	CM	4.62	109.51	0	114.14	28.53	142.67	
106di	EXCAVATESURPLUS HARD ROCK MATERIAL	CM	142.46	281.97	51.74	476.17	119.04	595.21	
106dii	EXCAVATESURPLUS MEDIUM ROCK MATERIAL	CM	22.81	277.47	0	300.28	75.07	375.35	
106diii	EXCAVATESURPLUS SOFT ROCK MATERIAL	CM	9.39	232.80	0	242.19	60.55	302.74	
107a	STRUCTURAL EXCAVATION IN COMMON MATERIAL	CM	8.53	124.87	0.38	133.78	33.45	167.23	

CODE	DESCRIPTION	UNIT	MANPOWER (1)	EQUIPMENT (2)	MATERIAL (3)	NET COST (4)=(1)+(2)+(3)	OH-PROFIT (5)=(4)*25%	ADJUSTED RATE (4)+(5)	REMARKS
107b	STRUCTURAL EXCAVATION IN COMMON MATERIAL BELOW WATER LEVEL	CM	63.08	252.10	62.69	377.87	94.47	472.34	
107ci	STRUCTURAL EXCAVATION IN HARD ROCK MATERIAL	CM	126.70	379.12	34.50	540.31	135.08	675.39	
107cii	STRUCTURAL EXCAVATION IN MEDIUM ROCK MATERIAL	CM	106.22	267.74	0	373.96	93.49	467.45	
107ciii	STRUCTURAL EXCAVATION IN SOFT ROCK MATERIAL	CM	65.16	220.95	0	286.12	71.53	357.65	
107d	GRANULAR BACK FILL	CM	34.85	124.15	376.69	535.69	133.92	669.61	
107e	COMMON BACKFILL	CM	22.30	57.52	5.08	84.91	21.23	106.14	
108a	FORMATION OF EMBANKMENT FROM ROADWAY EXCAVATION IN COMMON MATERIAL	CM	7.63	156.98	5.08	169.70	42.42	212.12	
108bi	FORMATION OF EMBANKMENT FROM ROADWAY EXCAVATION IN HARD ROCK MATERIAL	CM	21.32	433.84	54.96	510.12	127.53	637.66	
108bii	FORMATION OF EMBANKMENT FROM ROADWAY EXCAVATION IN MEDIUM ROCK MATERIAL	CM	16.00	370.57	2.42	389.00	97.25	486.24	
108biii	FORMATION OF EMBANKMENT FROM ROADWAY EXCAVATION IN SOFT ROCK MATERIAL	CM	14.22	330.09	0	344.31	86.08	430.39	
108c	FORMATION OF EMBANKMENT FROM BORROW EXCAVATION IN COMMON MATERIAL	CM	8.39	160.35	8.28	177.02	44.26	221.28	
108d	FORMATION OF EMBANKMENT FROM STRUCTURAL EXCAVATION IN COMMON MATERIAL	CM	6.76	68.30	5.08	80.14	20.03	100.17	
108e	FORMATION OF EMBANKMENT FROM STRUCTURAL EXCAVATION IN ANY TYPE OF ROCK MATERIAL	CM	14.80	101.49	3.02	119.31	29.83	149.14	
109a	SUBGRADE PREPARATION IN EARTH CUT	SM	1.52	24.58	1.46	27.56	6.89	34.46	

CODE	DESCRIPTION	UNIT	MANPOWER (1)	EQUIPMENT (2)	MATERIAL (3)	NET COST (4)=(1)+(2)+(3)	OH-PROFIT (5)=(4)*25%	ADJUSTED RATE (4)+(5)	REMARKS
109bi	SUBGRADE PREPARATION IN EXISTING ROAD WITHOUT ANY FILL	SM	1.10	16.59	0.77	18.46	4.62	23.08	
110	IMPROVED SUBGRADE	CM	10.59	107.98	62.51	181.08	45.27	226.35	
114a	DRESSING OF BERM WITHOUT EXTRA MATERIAL	SM	0.88	13.71	0.80	15.38	3.85	19.23	
114b	DRESSING OF BERM WITH EXTRA BORROW MATERIAL	SM	1.31	14.13	0.91	16.35	4.09	20.44	
201	GRANULAR SUB-BASE	CM	8.65	234.23	477.08	719.95	179.99	899.94	
202	AGGREGATE BASE	CM	10.82	300.37	670.71	981.91	245.48	1,227.38	
203a	ASPHALTIC BASE COURSE PLAN MIX (CLASS "A")	CM	67.39	1,359.93	4,310.42	5,737.73	1,434.43	7,172.17	
203b	ASPHALTIC BASE COURSE PLAN MIX (CLASS "B")	CM	70.50	1,359.93	4,581.19	6,011.62	1,502.90	7,514.52	
203c	ASPHALTIC LEVELING COURSE PLAN MIX (CLASS "A")	CM	75.50	1,420.37	4,303.85	5,799.72	1,449.93	7,249.65	
203d	ASPHALTIC LEVELING COURSE PLAN MIX (CLASS "B")	CM	75.50	1,415.44	4,685.68	6,176.62	1,544.16	7,720.78	
209a	BREAKING OF EXISTING ROAD PAVEMENT STRUCTURE	CM	2.43	98.87	0.68	101.98	25.50	127.48	
209b	SCARIFICATION OF EXISTING ROAD PAVEMENT	SM	0.48	19.78	0.13	20.40	5.10	25.50	
302a	CUT-BACK ASPHALT FOR BITUMINOUS PRIME COAT	SM	0.33	1.34	30.67	32.34	8.08	40.42	
303a	CUT-BACK ASPHALT FOR BITUMINOUS TACK COAT	SM	0.13	0.49	12.92	13.54	3.39	16.93	
304c	TRIPLE SURFACE TREATMENT	SM	2.15	17.57	121.69	141.41	35.35	176.76	
305a	ASPHALTIC CONCRETE FOR WEARING COURSE (CLASS "A")	CM	65.87	1,342.69	5,006.49	6,415.05	1,603.76	8,018.82	

CODE	DESCRIPTION	UNIT	MANPOWER (1)	EQUIPMENT (2)	MATERIAL (3)	NET COST (4)=(1)+(2)+(3)	OH-PROFIT (5)=(4)*25%	ADJUSTED RATE (4)+(5)	REMARKS
305b	ASPHALTIC CONCRETE FOR WEARING COURSE (CLASS "B")	CM	65.87	1,298.57	5,389.88	6,754.32	1,688.58	8,442.91	
401a1i	CONCRETE CLASS "A1" (UNDERGROUND)	CM	518.87	959.08	3,337.40	4,815.35	1,203.84	6,019.19	
401a1ii	CONCRETE CLASS "A1" (ON GROUND)	CM	518.87	959.08	3,583.07	5,061.02	1,265.26	6,326.28	
401a1iii	CONCRETE CLASS "A1" (ELEVATED)	CM	518.87	959.08	4,074.40	5,552.35	1,388.09	6,940.44	
401a2i	CONCRETE CLASS "A2" (UNDERGROUND)	CM	518.87	959.08	3,649.04	5,126.99	1,281.75	6,408.74	
401a2ii	CONCRETE CLASS "A2" (ON GROUND)	CM	518.87	959.08	3,894.71	5,372.66	1,343.17	6,715.83	
401a2iii	CONCRETE CLASS "A2" (ELEVATED)	CM	518.87	959.08	4,386.04	5,863.99	1,466.00	7,329.99	
401a3i	CONCRETE CLASS "A3" (UNDERGROUND)	CM	518.87	959.08	3,960.68	5,438.63	1,359.66	6,798.29	
401a3ii	CONCRETE CLASS "A3" (ON GROUND)	CM	518.87	959.08	4,206.35	5,684.30	1,421.08	7,105.38	
401a3iii	CONCRETE CLASS "A3" (ELEVATED)	CM	518.87	959.08	4,697.68	6,175.63	1,543.91	7,719.54	
401b	CONCRETE CLASS "B"	CM	683.97	677.17	2,639.64	4,000.78	1,000.20	5,000.98	
401ci	CONCRETE CLASS "C" (UNDERGROUND)	CM	492.96	423.91	2,923.08	3,839.95	959.99	4,799.94	
401cii	CONCRETE CLASS "C" (ON GROUND)	CM	492.96	423.91	3,027.85	3,944.72	986.18	4,930.91	
401ciii	CONCRETE CLASS "C" (ELEVATED)	CM	492.96	423.91	3,237.40	4,154.28	1,038.57	5,192.85	
401d	CONCRETE CLASS "D1"	CM	779.21	1,151.43	4,456.18	6,386.81	1,596.70	7,983.52	
401f	LEAN CONCRETE	CM	400.58	426.53	2,023.28	2,850.39	712.60	3,562.99	

CODE	DESCRIPTION	UNIT	MANPOWER (1)	EQUIPMENT (2)	MATERIAL (3)	NET COST (4)=(1)+(2)+(3)	OH-PROFIT (5)=(4)*25%	ADJUSTED RATE (4)+(5)	REMARKS
404a	REINFORCEMENT AS PER AASHTO M.31 GRADE 40	TON	1,552.45	686.57	50,406.98	52,646.00	13,161.50	65,807.50	
404b	REINFORCEMENT AS PER AASHTO M.31 GRADE 60	TON	1,552.45	686.57	53,346.98	55,586.00	13,896.50	69,482.50	
405a	PRE-STRESSING WIRE STRAND 3/8″ - 1/2″ DIA COMPLETE IN ALL RESPECT	TON	2,978.99	12,393.66	97,967.05	113,339.70	28,334.93	141,674.63	
405b	LAUNCHING OF GIRDER	TON	68.39	519.08	0	587.46	146.87	734.33	
406a	PREMOULDED JOIN FILLER 12mm THICK WITH BITUMASTIC JOINT SEAL	SM	108.61	0	260.70	369.31	92.33	461.64	
406b	NEOPRENE RUBBER JOINT FILLER 12mm THICK WITH BITUMASTIC JOINT SEAL	SM	108.61	0	265.78	374.39	93.60	467.98	
406c	STEEL EXPANSION JOINTS	KG	8.88	20.89	72.83	102.60	25.65	128.25	
406d	WATER STOPS 6″ SIZE	M	91.47	0.00	400.20	491.66	122.92	614.58	
406e	ELASTOMERIC BEARING PADS	ccm	0.01	0.00	1.72	1.74	0.43	2.17	
406g	STEEL BEARING DEVICE	KG	20.05	55.16	98.88	174.10	43.52	217.62	
407d3	CAST IN PLACE CONCRETE PILES 0.80-1.4m DIA (BORING ONLY) IN NORMAL SOIL	M	547.01	2,235.88	971.41	3,754.30	938.58	4,692.88	
407d4	CAST IN PLACE CONCRETE PILES 0.80-1.4m DIA (BORING ONLY) IN GRAVEL STRATA	M	911.68	3,726.56	1,167.29	5,805.53	1,451.38	7,256.92	
407k	CONFIRMATION BORING	M	186.97	1,338.80	6.35	1,532.12	383.03	1,915.15	
411a	STONE MASONRY RANDOM DRY	CM	267.64	92.24	584.51	944.39	236.10	1,180.49	
411b	STONE MASONRY RANDOM WITH MORTAR	CM	290.07	140.86	1,444.63	1,875.56	468.89	2,344.45	
411c	STONE MASONRY DRESSED UNCOURSED DRY	CM	347.07	92.24	648.37	1,087.68	271.92	1,359.60	

CODE	DESCRIPTION	UNIT	MANPOWER (1)	EQUIPMENT (2)	MATERIAL (3)	NET COST (4)=(1)+(2)+(3)	OH-PROFIT (5)=(4)*25%	ADJUSTED RATE (4)+(5)	REMARKS
411d	STONE MASONRY DRESSED UNCOURSED WITH MORTAR	CM	409.22	140.86	1,521.76	2,071.84	517.96	2,589.80	
411g	ROLL POINTING	SM	67.17	9.72	37.54	114.43	28.61	143.04	
501d	R.C.C PIPE CULVERTAASHTOM170 CLASS II DIA 610mm	M	204.86	992.89	1,427.59	2,625.34	656.34	3,281.68	
501f	R.C.C PIPE CULVERTAASHTOM170 CLASS II DIA 910mm	M	300.32	1,221.49	2,861.59	4,383.40	1,095.85	5,479.25	
502a	GRANULAR MATERIAL IN BED TO CONCREE PIPE CULVERT	CM	83.63	106.74	389.59	579.96	144.99	724.95	
502b	CONCRETE CLASS "B" IN BEDDING AND ENCASEMENT OF CONCRETE PIPE CULVERT	CM	757.63	514.94	2,928.20	4,200.77	1,050.19	5,250.96	
507a	STEEL WIRE MESH FOR GABIONS	KG	5.28	0	86.51	91.79	22.95	114.74	
507b	ROCK FILL IN GABION	CM	84.75	0	431.20	515.95	128.99	644.93	
509a	RIP RAP CLASS "A"	CM	447.61	0	500.57	948.18	237.05	1,185.23	
509b	RIP RAP CLASS "B"	CM	428.55	0	496.56	925.11	231.28	1,156.39	
509c	RIP RAP CLASS "C"	CM	430.78	0	500.57	931.36	232.84	1,164.20	
509d	GROUTED RIP RAP CLASS "A"	CM	545.43	84.53	1,735.05	2,365.00	591.25	2,956.25	
509e	GROUTED RIP RAP CLASS "B"	CM	524.75	67.63	1,603.20	2,195.58	548.89	2,744.47	
509f	GROUTED RIP RAP CLASS "C"	CM	516.72	56.35	1,634.19	2,207.26	551.82	2,759.08	
509g	REINFORCED CONCRETE SLOPE PROTECTION (WITHOUT REINFORCEMENT)	CM	734.61	298.78	3,389.52	4,422.91	1,105.73	5,528.64	
509h	FILTER LAYER OF GRANULAR MATERIAL	CM	42.56	173.14	377.19	592.89	148.22	741.12	

CODE	DESCRIPTION	UNIT	MANPOWER (1)	EQUIPMENT (2)	MATERIAL (3)	NET COST (4)=(1)+(2)+(3)	OH-PROFIT (5)=(4)*25%	ADJUSTED RATE (4)+(5)	REMARKS
510	DISMANTLING OF STRUCTURE AND OBSTRUCTIONS	CM	100.10	324.46	0	424.57	106.14	530.71	
511b1	GROUTED STONE PITCHING (15-20CM THICK)	SM	230.76	151.59	312.21	694.56	173.64	868.20	
511b2	GROUTED STONE PITCHING (21-25CM THICK)	SM	288.44	189.49	390.25	868.19	217.05	1,085.24	
605a	CONCRETE BEAM GUARDRAIL	M	65.15	25.40	503.98	594.53	148.63	743.16	
605c	CONCRETE POST FOR GUARDRAIL	EACH	79.98	22.66	501.23	603.88	150.97	754.84	
607a	TRAFFIC ROAD SIGN CATEGORY 1	EACH	222.28	215.06	6,179.75	6,617.08	1,654.27	8,271.35	
607b	TRAFFIC ROAD SIGN CATEGORY 2	EACH	63.56	322.59	8,371.79	8,757.94	2,189.49	10,947.43	
607c	TRAFFIC ROAD SIGN CATEGORY 3(a)	EACH	222.28	456.75	10,614.12	11,293.14	2,823.28	14,116.42	
607d	TRAFFIC ROAD SIGN CATEGORY 3(b)	EACH	666.01	507.08	18,864.28	20,037.38	5,009.34	25,046.72	
607e	TRAFFIC ROAD SIGN CATEGORY 3(c)	EACH	133.20	101.42	8,378.45	8,613.06	2,153.27	10,766.33	
608h2	PAVEMENT MARKING IN REFLECTIVE TP PAINT FOR LINES OF 15CM WIDE	M	3.24	8.53	57.92	69.69	17.42	87.11	
608j2	PAVEMENT MARKING IN REFLECTIVE TP PAINT FOR 4.0M ARROWS	EACH	70.13	6.48	730.32	806.93	201.73	1,008.67	
609c	REFLECTORIZED PAVEMENT STUD (RAISED PROFILE TYPE-SINGLE)	EACH	8.69	71.09	197.19	276.96	69.24	346.20	
609d	REFLECTORIZED PAVEMENT STUD (RAISED PROFILE TYPE-DOUBLE)	EACH	8.69	71.09	238.35	318.12	79.53	397.65	
610b	RIGHT OF WAY MARKER	EACH	88.95	102.37	254.65	445.97	111.49	557.47	
610c	KILOMETRE POST (0.610X0.114X1.5M)	EACH	566.17	813.93	1,700.90	3,080.99	770.25	3,851.24	

CODE	DESCRIPTION	UNIT	MANPOWER (1)	EQUIPMENT (2)	MATERIAL (3)	NET COST (4)=(1)+(2)+(3)	OH-PROFIT (5)=(4)*25%	ADJUSTED RATE (4)+(5)	REMARKS
501o	R.C.C PIPE CULVERTAASHTOM170 CLASS IV DIA 910mm	M	300.32	1,221.49	3,726.56	5,248.38	1,312.09	6,560.47	

NEW RATES

CODE	DESCRIPTION	UNIT	MANPOWER	EQUIPMENT	MATERIAL	NET COST (1)	OH-PROFIT (2)=(1)*25%	RATE (1)+(2)	REMARKS
109b	(ii) SUBGRADE PREPARATION IN EXISTING ROAD WITH FILL	SM				44.72	11.18	55.90	
SP513a	CAST-IN-PLACE CONCRETE CRIB	SM				2,785.68	696.42	3,482.10	
S01-1	CLEANING SLOPE (PER 100M2)	SM				32.36			
S01-2	PLACING RE-BAR AND WIRE MESH PER 100M	SM				1,085.38			
S01-3	ANCHOR	EACH				202.66			
S01-4	SPRAY MORTAR, PER 10M3	CM				15,249.04			
S01-5	INSTALLATION OF SAND BAG	EACH				54.15			
S01-6	FILLING SOIL IN SAND BAG PER 100 BAGS	BAG				16.27			
S02	TRIMMING EMBANKMENT SLOPE	SM				65.23			
S03	TRIMMING CUT SLOPE	SM				112.80			
S04	CONCRETE SPRAY (PER 10M3)	CM				14,259.25			
SP507	GABION BOX (1.0x1.0x2.0m) PER 2.0M3	CM				4,414.25	1,103.56	5,517.81	
SP507a	GEOTEXTILE FILTER BEHIND WALL (PER 10M2)	SM				117.42	29.36	146.78	
506b5	CATCHBASIN, TYPE (1510X1200)	EACH				59,051.63	14,762.91	73,814.53	
SP506c	CONCRETE CHUTE	LS				39,940.64	9,985.16	49,925.80	

CODE	DESCRIPTION	UNIT	MANPOWER	EQUIPMENT	MATERIAL	NET COST (1)	OH-PROFIT (2)=(1)*25%	RATE (1)+(2)	REMARKS
512a7	CONCRETE LINING DITCH, TYPE II-2A (PER 10M)	M				400.04	100.01	500.05	
SP107f	GRAVEL BEDDING (PER 10M3)	CM				919.85	229.96	1,149.82	
512a9	CONCRETE LINING DITCH, TYPE (II-3A) (PER 10M)	M				518.98	129.74	648.72	
512a1	CONCRETE DITCH ON RETAINING WALL, TYPE I (PER 10M)	M				406.15	101.54	507.68	
512a8	CONCRETE COVER, TYPE II-2B (PER 20 COVER)	EACH				325.18			
512a10	CONCRETE COVER, TYPE II-3B (PER 20 COVER)	EACH				510.10			
601d1	PRECAST CONCRETE CURB (TYPE A), PER DAY	EACH				923.30	230.83	1,154.13	
601d2	PRECAST CONCRETE CURB (TYPE B), PER DAY	EACH				590.26	147.56	737.82	
	BACKFILLING BEHIND RETAINING WALL (PER 10M3)	SM				806.33	201.58	1,007.92	
510	DEMOLITION OF EXISTING BRIDGE (PER 100l	CM				1,939.97	484.99	2,424.97	Naluchi Br.
S13-1	DEMOLITION OF EXISTING BRIDGE INCLUDING LOADING (PER 10M3)	CM				1,884.76	471.19	2,355.95	
S13-2	DISPOSAL OF DEMOLISHED MATERIAL TO SPOIL AREA AND SPREADING (PER 100M3)	CM				55.21	13.80	69.02	
S14	PAVEMENT FOR SIDEWALK (TYPE A), PER 10M2	SM				353.09	88.27	441.37	
S15	PAVEMENT FOR MINOR ROAD (PER 10M2)	SM				166.92	41.73	208.66	
602d	PRECAST CONCRETE INERLOCKING BLOCK SIDEWALK, (TYPE A) PER 10M2	SM				1,373.79	343.45	1,717.23	

CODE	DESCRIPTION	UNIT	MANPOWER	EQUIPMENT	MATERIAL	NET COST (1)	OH-PROFIT (2)=(1)*25%	RATE (1)+(2)	REMARKS
613c	TOP SOIL	SM				71.56	17.89	89.44	
613a	SPRIGGING	SM				300.00	75.00	375.00	
612a	PLANTING TREES	EACH				125.00	31.25	156.25	Hibiscus
613b	SODDING	SM				211.00	52.75	263.75	
S16	REMOVAL OF CONCRETE KERB FOR RE-USE INCLUDING HAULING FOR STOCK, PER 100M	M				45.21	11.30	56.51	
S17	FENCING UNDER BRIDGE , H=2.1M	M				1,980.44	495.11	2,475.55	
S18	FORMWORK FOR DRAINAGE STRUCTURE	SM				985.90	246.47	1,232.37	
S19	MIXING CONCRETE FOR DRAINAGE WORK	CM				4,910.45	1,227.61	6,138.06	
S20	CUTTING GROUND BY MANUAL	CM				207.95			
S21	EXCAVATION BY MANUAL	CM				352.62			
S22	LOADING BY MANUAL	CM				117.54			
S23	BACKFILLING BY MANUAL	CM				207.95			
S15	PAVEMENT FOR MINOR ROAD (PER 10M2)	SM				166.92			
SP16	75mm DIA. PVC PIPE FOR WEEP HOLE IN WALL	M				1,093.14	273.28	1,366.42	

EQUIPMENT COST AND RATE OF EARTH WORK

CODE	DESCRIPTION	UNIT	MANPOWER	EQUIPMENT	MATERIAL	NET COST (1)	OH-PROFIT (2)=(1)x25%	RATE (1)+(2)	REMARKS
E01	HAULING EARTH BY DUMP TRUCK PER KM·M3	KMM^3				11.96	2.99	14.95	Site-on-cost, overhead & profit
E02	HAULING SUBGRADE MATERIAL, DISTANCE=3KM	M3				87.95			25% on net cost
E03	FORMATION OF EMBANKMENT FROM ROADWAY EXCAVATION IN COMMON MATERIAL, L=500M	M^3				162.75	40.69	203.43	
E04	EXCAVATION AND LOADING MATERIAL OTHER THAN ROCK OR ARTIFICIAL HARD MATERIAL BY BACKHOE (0.6m3)	M^3				62.01			
E05	HAULING EARTH BY DUMP TRUCK (0.5km DISTANCE)	M^3				58.06			
E06	SPREADING AND COMPACTION BY BULLDOZER, 20t (per m3)	M^3				42.68	10.67	53.35	
E07	LOADING LOOSE MATERIAL OTHER THAN ROCK OR ARTIFICIAL HARD MATERIAL BY BACKHOE (0.6m3)	M^3				51.18	12.80	63.98	
E08	EXCAVATION OF MATERIAL OTHER THAN ROCK OR ARTIFICIAL HARD MATERIAL BY BULLDOZER, (ICLUDING 60m PUSH)	M^3				61.52	15.38	76.90	
E09	BACKFILLING OF STRUCTURE, 1m<W<4.0m	M^3				155.24	38.81	194.05	
E10	BACKFILLING OF STRUCTURE, W>4.0m	M^3				95.14	23.78	118.92	
E11	BACKFILLING OF STRUCTURE W<1.0m	M^3				233.06	58.26	291.32	
E12	EQUIPMENT COST OF TAMPER (60-100kg) (PER DAY)	DAY				1,406.07			
E13	EQUPMENT COST OF VIBRATING ROLLER (0.8-1.1t) (PER DAY)	DAY				2,108.40			
E14	EQUIPMENT COST OF BACKHOE, 0.6M3 PER HOUR	HOUR				2,085.88			

CODE	DESCRIPTION	UNIT	MANPOWER	EQUIPMENT	MATERIAL	NET COST (1)	OH-PROFIT (2)=(1)*25%	RATE (1)+(2)	REMARKS
E15	COMPACTION BY TAMPER (60-100kg)	M^3				71.74			
E16	EXCAVATION OF SOFT ROCK BY HYDRAULIC BRAKER	M^3				364.68	91.17	455.85	
E17	EQUIPMENT COST OF BACKHOE WITH BRAKER (PER DAY)	DAY				21,272.78			
E18	EQUIPMENT COST OF FOUNDATION EXCAVATION BY BACKHOE (0.6m3), OTHER THAN ROCK OR ARTIFICIAL HARD MATERIAL, (PER DAY)	DAY				15,866.47			
E19	FOUNDATION EXCAVATION BY BACKHOE (0.6m3), OTHER THAN ROCK OR ARTIFICIAL HARD MATERIAL	M^3				72.12	18.03	0.25	
E20	COMPACTION BY VIBRATING ROLLER, 3-4T	M^3				64.96	16.24	81.20	
E21	SPREADING BY BULLDOZER, 15t	M^3				28.53	7.13	35.66	
E22	COMPACTION BY TYRED ROLLER , 8-20t	M^3				70.19	17.55	87.74	
E23	EQUIPMENT COST OF GRADER (PER DAY)	DAY				16,128.23			
E24	EQUIPMENT COST OF TYRE ROLLER, 8-20t (PER DAY)	DAY				11,230.09			
E25	EQUIPMENT COST OF VIBRATING ROLLER, 3-4t (PER DAY)	DAY				7,795.02			
E26	EQUIPMENT COST OF BULLDOZER, 15t (PER DAY)	DAY				19,685.68			
E27	EQUIPMENT COST OF BULLDOZER, 20t, EXCAVATION AND PUSHING (PER DAY)	DAY				26,195.72			
E28	EQUIPMENT COST OF BACKHOE, 0.6M3 , EXCAVATION AND LOADING (PER DAY)	DAY				18,602.05			

CODE	DESCRIPTION	UNIT	MANPOWER	EQUIPMENT	MATERIAL	NET COST (1)	OH-PROFIT (2)=(1)*25%	RATE (1)+(2)	REMARKS
E29	EQUIPMENT COST OF BULLDOZER, 20t, SPREADING AND COMPACTION (PER DAY)	DAY				23,982.64			
E30	SPREADING BY GRADER	M^3				25.99			
E31	EQUIPMENT COST FOR CONCRETE/MORTAR SPRAY (PER HOUR)	HOUR				6,060.79			
E32	COMPACTION BY VIBRATING ROLLER 8-10t (PER M3)	M^3				23.05	5.76	28.81	
E33	EQUIPMENT COST OF ROUGH TERRAIN CRANE (35T) (PER DAY)	DAY				17,677.00			
E34	EQUIPMENT COST OF BACKHOE, 0.2M3 (PER DAY)	DAY				11,504.72			
E35	EXCAVATION AND LOADING BY BACKHOE, 0.2M3, W<1.0M (SMALL EARTH WORK)	M^3				302.76	75.69	378.44	
SP513b	CONCRETE CRIB WITH ROCK BOLT (PER 1,021.0M2)	M2				7,790.17	1,947.54	9,737.72	Naluchi Br. (Type B)
SP405a	PC GIRDER, L=29.9M (PER GIRDER)	EACH				456,907.87	114,226.97	571,134.84	
407d	CAST-IN-PLACE CONCRETE PILES 1.2M INCLUDING, CONCRETE	M				12,568.14	3,142.04	15,710.18	Naluchi Br.
SP504a	FLARED TYPE HEADWALL CAST-IN-PLACE CONCRETE PILES 1.2M INCLUDING, CONCRETE	EACH				23,662.88	5,915.72	29,578.60	
613c	TOP SOIL	SM				71.56	17.89	89.44	

(2) ANALYSIS OF UNIT RATES

WEST BANK BYPASS CONSTRUCTION PROJECT

ANALYSIS OF UNIT PRICE

NEW RATES

109b (ii) SUBGRADE PREPARATION IN EXISTING ROAD WITH FILL

No.	Description	Specification	Quantity	Unit	Local Cost (Rs)		Foreign Cost (US$)		Remarks
					Rate	Amount	Rate	Amount	
1	Transportation of material by dump truck	10t	1.0	M^3	87.95	87.95			E02
2	Spreading by grader	3.7m	1.0	M^3	25.99	25.99			E30
3	Compaction by vibrating roller	3-4t	1.0	M^3	64.96	64.96			E20
	Net cost					178.89	Rs/m^3		
						44.72	Rs/m^2		

Note: Per m^3

WEST BANK BYPASS CONSTRUCTION PROJECT

ANALYSIS OF UNIT PRICE

SP513 a **CAST-IN-PLACE CONCRETE CRIB**

No.	Description	Specification	Quantity	Unit	Local Cost (Rs)		Foreign Cost (US$)		Remarks
					Rate	Amount	Rate	Amount	
1	Cleaning slope		1,021.2	m^2	32.36	33,047.83			S01-1
2	Placing re-bar and wire mesh		1,466	m	1,085.38	1,591,166.50			S01-2
3	Anchor		609	each	202.66	123,417.44			S01-3
4	Spray mortar		58.6	m^3	15,249.04	893,593.88			S01-4
5	Grouted stone pitching		293	m^2	694.56	203,506.72			S01-5
	Net cost					2,844,732.38			
						2,785.68	Rs/m^2		

Note: Material per 1,021.2m^2

Wire mesh h =20cm	1,466	m
Re-bar, D10	3,534	kg
Anchor bar, D16, L=75cm	609	No
D10, L=400	1,176	No
Area to be filled with bag	728.2	m^2
Number of bag, 6bags/m^2	4,369	bags

*1 P10-18 Standard Output, JHA Japan

Adjustment of September 2006 CSR Rate (MANSEHRA)

Mix proportion of material per m^3

W/C	Water	Cement	Sand
%	kg	kg	kg
55%	220	400	1,675

WEST BANK BYPASS CONSTRUCTION PROJECT

ANALYSIS OF UNIT PRICE

S01-1 CLEANING SLOPE (PER 100M^2)

No.	Description	Specification	Quantity	Unit	Local Cost (Rs)		Foreign Cost (US$)		Remarks
					Rate	Amount	Rate	Amount	
1	Skilled labour		1.05	manday	985.20	1,034.46			
2	Labour		0.30	manday	904.14	271.24			
3	Hiring charge of compressor	10.5m^3	0.30	day	4,191.18	1,257.35			
4	Fuel		18	litre	38.05	673.12			
	Net cost					3,236.18			
						32.36	Rs/m^2		

Note: Per 100m^2

Adjustment of September 2006 CSR Rate (MANSEHRA)
*1 P10-19 Standard Output, JHA Japan

WEST BANK BYPASS CONSTRUCTION PROJECT

ANALYSIS OF UNIT PRICE

S01-2 PLACING RE-BAR AND WIRE MESH PER 100M

No.	Description	Specification	Quantity	Unit	Local Cost (Rs)		Foreign Cost (US$)		Remarks
					Rate	Amount	Rate	Amount	
1	Skilled labour		8.00	manday	985.20	7,881.60			
2	Labour		4.00	manday	904.14	3,616.57			
3	Re-bar		0.24	t	55,586.00	13,399.79			
4	Wire mesh		100	m	836.40	83,640.00			¥1,640
									P321
	Net cost					108,537.96			
						1,085.38	Rs/m		

Note: Per 100m

3.534kg/1466m*100m

*1 P10-19 Standard Output, JHA Japan

Adjustment of September 2006 CSR Rate (MANSEHRA)

WEST BANK BYPASS CONSTRUCTION PROJECT

ANALYSIS OF UNIT PRICE

S01-3 ANCHOR

No.	Description	Specification	Quantity	Unit	Local Cost (Rs)		Foreign Cost (US$)		Remarks
					Rate	Amount	Rate	Amount	
1	Skilled labour		6.00	manday	985.20	5,911.20			
2	Anchor, D16	L=750	0.012	t	55,586.00	657.67			
3	Hiring charge of compressor	10.5m3	1.40	day	4,191.18	5,867.65			
4	Hiring charge of hand hammer	15kg	5.7	day	718.88	4,097.59			
5	Fuel		83	litre	38.05	3,141.23			
6	Other		1	LS		590.26			3% of the above
	Net cost					20,265.59			
						202.66	Rs/each		

Note: Weight of anchor, 100 Nos

0.012 t

*1 P10-19 Standard Output, JHA Japan

WEST BANK BYPASS CONSTRUCTION PROJECT

ANALYSIS OF UNIT PRICE

S01-4 SPRAY MORTAR, PER 10M^3

No.	Description	Specification	Quantity	Unit	Local Cost (Rs)		Foreign Cost (US$)		Remarks
					Rate	Amount	Rate	Amount	
1	Skilled worker		4.60	manday	985.20	4,531.92			
2	Slope protection worker		1.50	manday	9,254.12	13,881.18			
3	Labour		6.10	manday	904.14	5,515.26			
4	Hiring charge of equipment and fuel		9.9	hour	6,060.79	60,001.81			E31
5	Cement		5.20	t	6,100.00	31,720.00			Allow for 30% loss
6	Sand		15.6	m^3	1,060.00	16,486.79			〃
7	Admixture		156.0	kg	102.00	15,912.00			Cement x 3%
						4,441.47			3% of the above
	Net cost					152,490.42			
						15,249.04	Rs/m^3		

Note: Mix proportion of material per m^3

	W/C	Water	Cement	Sand
	%	kg	kg	kg
*1 P10-20 Standard Output, JHA Japan	55%	220	400	1,675

Adjustment of September 2006 CSR Rate (MANSEHRA)

WEST BANK BYPASS CONSTRUCTION PROJECT

ANALYSIS OF UNIT PRICE

S01-5 INSTALLATION OF SAND BAG

No.	Description	Specification	Quantity	Unit	Local Cost (Rs)		Foreign Cost (US$)		Remarks
					Rate	Amount	Rate	Amount	
1	Foreman		1.60	manday	2,784.71	4,455.53			
2	Skilled labour		2.70	manday	985.20	2,660.04			
3	Labour		12.00	manday	904.14	10,849.70			
4	Filling soil in sand bag		1000.0	bags	16.27	16,274.55			S01-6
5	Rough terrain crane		0.90	day	17,677.00	15,909.30			E33
6	Fuel		105	litre	38.05	3,997.53			
	Net cost					54,146.65	Rs		
						54.15	Rs/bag		

Note: Per 100 bags

Sand bag per m^2 6 bags

P60 Standard unit outputs, Ministruy of Work, Japan

WEST BANK BYPASS CONSTRUCTION PROJECT

ANALYSIS OF UNIT PRICE

S01-6 FILLING SOIL IN SAND BAG PER 100 BAGS

No.	Description	Specification	Quantity	Unit	Local Cost (Rs)		Foreign Cost (US$)		Remarks
					Rate	Amount	Rate	Amount	
1	Labour		1.80	manday	904.14	1,627.45			
2	Sand bag	400 × 600	100.00	manday	0.00	0.00			
	Net cost					1,627.45	Rs		
						16.27	Rs/bag		

Note: Per 100 bags

P60 Standard unit outputs, Ministruy of Work, Japan

WEST BANK BYPASS CONSTRUCTION PROJECT

ANALYSIS OF UNIT PRICE

S02 TRIMMING EMBANKMENT SLOPE

No.	Description	Specification	Quantity	Unit	Local Cost (Rs)		Foreign Cost (US$)		Remarks
					Rate	Amount	Rate	Amount	
1	Foreman		0.20	manday	2,784.71	556.94			
2	Labor		0.60	manday	904.14	542.48			
3	Backhoe	$0.6m^3$	2.6	hour	1,593.14	4,142.16			
4	Fuel		34	litre	38.05	1,281.14			
	Net cost					6,522.73	Rs		
						65.23	Rs/m^2		

Note: Per 100 m^2

P55 Standard unit outputs, Ministruy of Work, Japan

WEST BANK BYPASS CONSTRUCTION PROJECT

ANALYSIS OF UNIT PRICE

S03 TRIMMING CUT SLOPE

No.	Description	Specification	Quantity	Unit	Local Cost (Rs)		Foreign Cost (US$)		Remarks
					Rate	Amount	Rate	Amount	
1	Foreman		0.60	manday	2,784.71	1,670.82			
2	Labor		1.40	manday	904.14	1,265.80			
3	Backhoe	$0.6m^3$	4.0	hour	1,593.14	6,372.55			
4	Fuel		52	litre	38.05	1,970.99			
	Net cost					11,280.16	Rs		
						112.80	Rs/m^2		

Note: Per $100m^2$

P56 Standard unit outputs, Ministruy of Work, Japan

WEST BANK BYPASS CONSTRUCTION PROJECT

ANALYSIS OF UNIT PRICE

S04 CONCRETE SPRAY (PER 10M ^{3})

No.	Description	Specification	Quantity	Unit	Local Cost (Rs)		Foreign Cost (US$)		Remarks
					Rate	Amount	Rate	Amount	
1	Skilled worker		4.60	manday	985.20	4,531.92			
2	Slope protection worker		1.50	manday	9,254.12	13,881.18			
3	Labour		6.10	manday	904.14	5,515.26			
4	Hiring charge of equipment and fuel		9.9	hour	6,060.79	60,001.81			E31
5	Cement		4.29	t	6,100.00	26,169.00			Allow for 30% loss
6	Sand		13.4	m^3	1,060.00	14,173.71			〃
7	Aggregate		3.1	m^3	1,304.00	4,068.48			〃
8	Admixture		99.0	kg	102.00	10,098.00			Cement x 3%
						4,153.18			3% of the above
	Net cost					142,592.54			
						14,259.25	Rs/m^3		

Note: Mix proportion of material per m^3

W/C	Water	Cement	Sand	Aggregate
%	kg	kg	kg	kg
55%	181.5	330	1,440	360

*1 P30-25 Standard Output, JHA Japan

WEST BANK BYPASS CONSTRUCTION PROJECT

ANALYSIS OF UNIT PRICE

SP507 GABION BOX (1.0x1.0x2.0m) PER 2.0M^3

No.	Description	Specification	Quantity	Unit	Local Cost (Rs)		Foreign Cost (US$)		Remarks
					Rate	Amount	Rate	Amount	
	Gabion box	1x1x2m	1	box	3,876.00	3,876.00			
	Filling stone in Gabion	1x1x2m	1	box	4,952.50	4,952.50			4952.5
	Net cost					8,828.50	Rs		
						4,414.25	Rs/m^3		

Note:

Quoted by local contractor

WEST BANK BYPASS CONSTRUCTION PROJECT

ANALYSIS OF UNIT PRICE

SP507 a GEOTEXTILE FILTER BEHIND WALL (PER 10M ^{2})

No.	Description	Specification	Quantity	Unit	Local Cost (Rs)		Foreign Cost (US$)		Remarks
					Rate	Amount	Rate	Amount	
1	Labor		0.06	manday	904.14	54.25			
2	Geotextile filter	10mm	11.20	m^2	100	1,120.00			10x1.12
	Net cost					1,174.25	Rs		
						117.42	Rs/m^2		

Note: Per 10m^2

P70 Standard unit outputs, Ministruy of Work, Japan

WEST BANK BYPASS CONSTRUCTION PROJECT

ANALYSIS OF UNIT PRICE

506b5 CATCHBASIN, TYPE (1510X1200)

No.	Description	Specification	Quantity	Unit	Local Cost (Rs)		Foreign Cost (US$)		Remarks
					Rate	Amount	Rate	Amount	
1	Excavation	Manual	9.92	m^3	352.62	3,499.24			
2	Backfilling	Manual	4.54	m^3	207.95	943.56			
3	Formwork		18.82	m^2	985.90	18,550.65			
4	Reinforcing bar		0.66	t	52,646.00	34,987.42			
5	Concrete		13.29	m^3	5,061.02	1,070.76			
	Net cost					59,051.63	Rs/each		

Nonte:

Mean H = 1.92 m

Formwork 18.8 m^2

*1 P11-28 Standard Output, JHA Japan

WEST BANK BYPASS CONSTRUCTION PROJECT

ANALYSIS OF UNIT PRICE

SP506 c **CONCRETE CHUTE**

No.	Description	Specification	Quantity	Unit	Local Cost (Rs)		Foreign Cost (US$)		Remarks
					Rate	Amount	Rate	Amount	
1	Excavation	Manual	9.00	m^3	352.62	3,173.54			
2	Backfilling	Manual	5.00	m^3	207.95	1,039.76			
3	Formwork		26.45	m^2	985.90	26,076.99			05
4	Reinforcing bar		0.17	t	52,646.00	8,949.82			
5	Concrete		5.04	m^3	5,061.02	700.54			
	Net cost					39,940.64	Rs		

Nonte:

*1 P11-28 Standard Output, JHA Japan

WEST BANK BYPASS CONSTRUCTION PROJECT

ANALYSIS OF UNIT PRICE

512a7 CONCRETE LINING DITCH, TYPE II-2A (PER 10M)

No.	Description	Specification	Quantity	Unit	Local Cost (Rs)		Foreign Cost (US$)		Remarks
					Rate	Amount	Rate	Amount	
1	Excavation	By manual	6.37	m^3	352.62	2,244.92			
2	Gravel bedding		0.90	m^3	919.85	827.87			
3	Concrete	Class A1	2.25	m^3	5,061.02	61.46			Allow 7% of loss
4	Backfilling		3.7	m^3	233.06	866.16			E11
	Net cost					4,000.40			
						400.04	Rs/m		

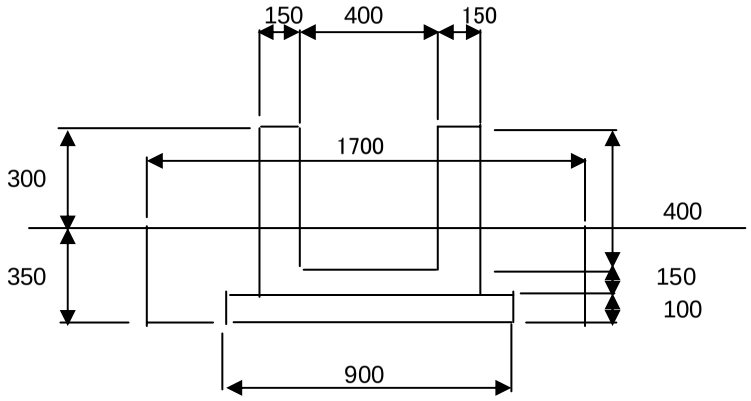

WEST BANK BYPASS CONSTRUCTION PROJECT

ANALYSIS OF UNIT PRICE

SP107f GRAVEL BEDDING (PER 10M^3)

No.	Description	Specification	Quantity	Unit	Local Cost (Rs)		Foreign Cost (US$)		Remarks
					Rate	Amount	Rate	Amount	
1	River gravel		12.00	m^3	550.00	6,600.00			Allow for 20% of loss
2	Labor		2.00	manday	904.14	1,808.28			
3	Hiring charge of rammer	60-100kg	3.00	hour	233.06	699.17			
	Others					91.07			1% of the above
	Net cost					9,198.53			
						919.85	Rs/m^3		

*1 P11-7 Standard Output, JHA Japan

WEST BANK BYPASS CONSTRUCTION PROJECT

ANALYSIS OF UNIT PRICE

512a9 CONCRETE LINING DITCH, TYPE (II-3A) (PER 10M)

No.	Description	Specification	Quantity	Unit	Local Cost (Rs)		Foreign Cost (US$)		Remarks
					Rate	Amount	Rate	Amount	
1	Excavation	By manual	8.67	m^3	352.62	3,056.12			
2	Gravel foundation		1.00	m^3	919.85	919.85			
3	Concrete	Class A1	2.70	m^3	5,061.02	79.52			Allow for 7% of loss
4	Backfilling		4.9	m^3	233.06	1,134.29			E11
	Net cost					5,189.78			
						518.98	Rs/m		

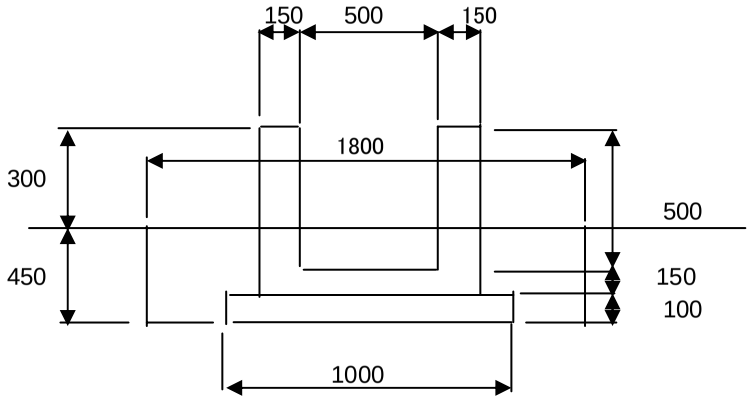

WEST BANK BYPASS CONSTRUCTION PROJECT

ANALYSIS OF UNIT PRICE

512a1 CONCRETE DITCH ON RETAINING WALL, TYPE I (PER 10M)

No.	Description	Specification	Quantity	Unit	Local Cost (Rs)		Foreign Cost (US$)		Remarks
					Rate	Amount	Rate	Amount	
	Concrete	Class A1	0.80	m^3	5,061.02	4,061.47			Allow for 7% of loss
	Net cost					4,061.47	Rs		
						406.15	Rs/m		

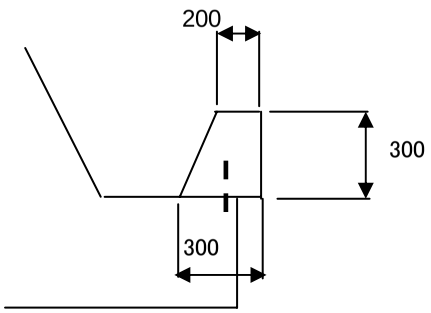

V=(0.2+0.3)0.30 × 10/2= 0.75 m^3

V=(0.25+0.35)0.60 × 10/2= 1.8 m^3 Type 4 910.98 Rs/m

WEST BANK BYPASS CONSTRUCTION PROJECT

ANALYSIS OF UNIT PRICE

512a8 CONCRETE COVER, TYPE II-2B (PER 20 COVER)

No.	Description	Specification	Quantity	Unit	Local Cost (Rs)		Foreign Cost (US$)		Remarks
					Rate	Amount	Rate	Amount	
1	Concrete	Class A1	0.75	m^3	5,061.02	3,790.70			Allow for 7% of loss
2	Reinforcing bar		0.04	ton	52,646.00	1,971.59			
3	Labor		0.82	manday	904.14	741.40			
	Net cost					6,503.69			
						325.18	Rs/each		

*1 P11-28 Standard Output, JHA Japan
0.041manday/cover

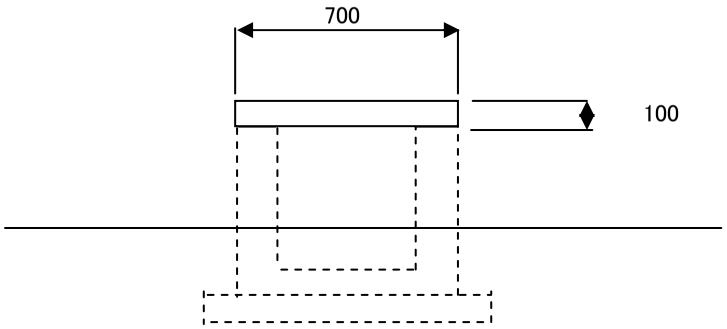

Average daily production 20 covers

W = 80.5 kg/each

V=0.70×0.10×0.50= 0.035 m^3/each

WEST BANK BYPASS CONSTRUCTION PROJECT

ANALYSIS OF UNIT PRICE

512a10 CONCRETE COVER, TYPE II-3B (PER 20 COVER)

No.	Description	Specification	Quantity	Unit	Local Cost (Rs)		Foreign Cost (US$)		Remarks
					Rate	Amount	Rate	Amount	
1	Concrete	Class A1	0.86	m^3	5,061.02	4,332.23			Allow for 7% of loss
2	Reinforcing bar		0.04	ton	52,646.00	2,253.25			
3	Labor		4.00	manday	904.14	3,616.57			
	Net cost					10,202.05			
						510.10	Rs/each		

0.041manday/cover

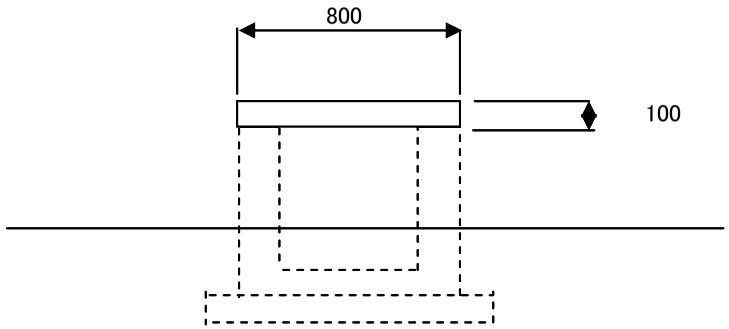

Average daily production 20 covers

W = 92 kg/each

V=0.80×0.10×0.50= 0.04 m^3/each

*1 P11-28 Standard Output, JHA Japan

WEST BANK BYPASS CONSTRUCTION PROJECT

ANALYSIS OF UNIT PRICE

601d1 PRECAST CONCRETE CURB (TYPE A), PER DAY

No.	Description	Specification	Quantity	Unit	Local Cost (Rs)		Foreign Cost (US$)		Remarks
					Rate	Amount	Rate	Amount	
1	Concrete	Class A1	0.674	m^3	5,061.02	3,411.63			Allow for 7% of loss
2	Mason		4	manday	1,455.34	5,821.37			
	Net cost					9,233.00	Rs		
						923.30	Rs/each		

Average number of casting per day 20 Nos

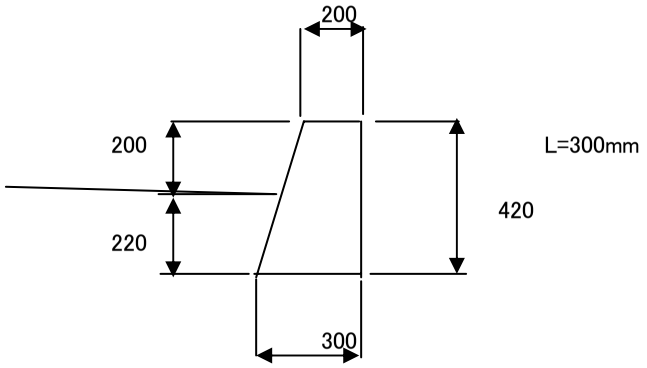

V=(0.2+0.3)0.42 × 0.3/2= 0.0315 m^3 72.45 kg

WEST BANK BYPASS CONSTRUCTION PROJECT

ANALYSIS OF UNIT PRICE

601d2 PRECAST CONCRETE CURB (TYPE B), PER DAY

No.	Description	Specification	Quantity	Unit	Local Cost (Rs)		Foreign Cost (US$)		Remarks
					Rate	Amount	Rate	Amount	
1	Concrete	Class A1	0.016	m^3	5,061.02	81.23			Allow for 7% of loss
2	Mason		4	manday	1,455.34	5,821.37			
	Net cost					5,902.60	Rs		
						590.26	Rs/each		

Average number of casting per day 30 Nos

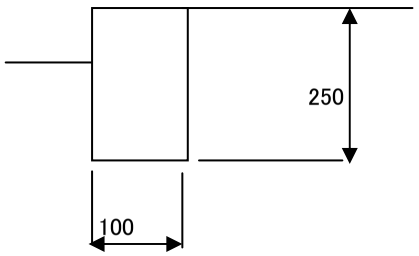

V=0.1 × 0.25 × 0.6= 0.015 m^3 34.5 kg

WEST BANK BYPASS CONSTRUCTION PROJECT

ANALYSIS OF UNIT PRICE

BACKFILLING BEHIND RETAINING WALL (PER 10M^3)

No.	Description	Specification	Quantity	Unit	Local Cost (Rs)		Foreign Cost (US$)		Remarks
					Rate	Amount	Rate	Amount	
1	Material	River gravel	12.00	m^3	550.00	6,600.00			Allow for 20% of loss
2	labour		0.60	manday	904.14	542.48			
3	Hiring chrge of backhoe	0.2m^3	0.60	hour	1,062.09	637.25			
4	Fuel		5.4	litre	38.05	203.76			
5	Others					79.83			1 % of the above
	Net cost					8,063.33	Rs		
						806.33	Rs/m^3		

*1 P10-43 Standard Output, JHA Japan

WEST BANK BYPASS CONSTRUCTION PROJECT

ANALYSIS OF UNIT PRICE

510 DEMOLITION OF EXISTING BRIDGE (PER 100M^3)

No.	Description	Specification	Quantity	Unit	Local Cost (Rs)		Foreign Cost (US$)		Remarks
					Rate	Amount	Rate	Amount	
	Demolition of existing bridge including loading		100	m3	1,884.76	188,476.18			S13-1
	Disposal demolithed maerial to spoil area and spreading		100	m3	55.21	5521.280825			S13-2
	Net cost					193,997.46	Rs		
						1,939.97	Rs/m^3		
						2423.75			

WEST BANK BYPASS CONSTRUCTION PROJECT

ANALYSIS OF UNIT PRICE

S13-1 DEMOLITION OF EXISTING BRIDGE INCLUDING LOADING (PER 10M^3)

No.	Description	Specification	Quantity	Unit	Local Cost (Rs)		Foreign Cost (US$)		Remarks
					Rate	Amount	Rate	Amount	
	Foreman		0.64	manday	2,784.71	1,782.21			
	Welder		1.11	manday	1,455.34	1,615.43			
	Skilled labor		0.64	manday	985.20	630.53			
	labor		1.11	manday	904.14	1,003.60			
	Hiring charge of backhoe with braker	0.6m^3, 1300kg	0.64	day	21,272.78	13,614.58			E17
	Others					201.27			4% on the labor cost
						18,847.62	Rs		
						1,884.76	Rs/m3		

P604 Standard unit outputs, Ministruy of Work, Japan

WEST BANK BYPASS CONSTRUCTION PROJECT

ANALYSIS OF UNIT PRICE

S13-2 DISPOSAL OF DEMOLISHED MATERIAL TO SPOIL AREA AND SPREADING (PER 100M^3)

No.	Description	Specification	Quantity	Unit	Local Cost (Rs)		Foreign Cost (US$)		Remarks
					Rate	Amount	Rate	Amount	
	Transportation	10 dump truck	3.67	hour	727.71	2,668.28			100/Q
	Spreading	20t brlldozer	100	m3	28.53	2,853.00			E21
						5,521.28	Rs		
						55.21	Rs/m3		

Note: Hauling capacity

$$Q = \frac{C \times 60 \times F \times E}{t_1+t_2+t_3+t_4} = 27.27 \text{ m3/h}$$

C = loading capacity, 10t/1.8t/m^3	5.56	m^3	
F = road condition	1		
E = Efficiency of work	0.9	m	
Hauling distance	1.0	km	
Speed	10.0	km/hour	
t_1 = time required for loading, n × cm	0	min.	Including in SP
t_2 = waiting time for loading	0	min.	
t_3 = hauling time	6.0	min.	
t_4 = waiting time of unloading	5	min.	

*1 P7-25 Standard Output, JHA Japan

WEST BANK BYPASS CONSTRUCTION PROJECT

ANALYSIS OF UNIT PRICE

S14 PAVEMENT FOR SIDEWALK (TYPE A), PER 10M^2

No.	Description	Specification	Quantity	Unit	Local Cost (Rs)		Foreign Cost (US$)		Remarks
					Rate	Amount	Rate	Amount	
1	Gravel base course	t=100mm	10.00	SM		0			
2	Prime coat		10.00	SM	32.34	323.40			
3	Asphalt concrete	t=50mm	0.50	CM	6,415.05	3,207.53			
	Net cost					3,530.93			
						353.09	Rs/m2		

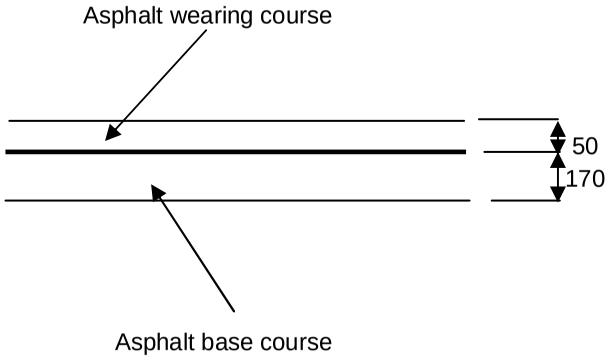

WEST BANK BYPASS CONSTRUCTION PROJECT

ANALYSIS OF UNIT PRICE

S15 PAVEMENT FOR MINOR ROAD (PER 10M^2)

No.	Description	Specification	Quantity	Unit	Local Cost (Rs)		Foreign Cost (US$)		Remarks
					Rate	Amount	Rate	Amount	
1	Aggregate base course		1.73	CM	981.91	1669.247			Allow 2% for loss
	Net cost					**1,669.25**			
						166.92	Rs/m^2		

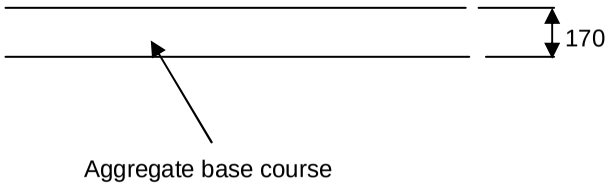

WEST BANK BYPASS CONSTRUCTION PROJECT

ANALYSIS OF UNIT PRICE

602d PRECAST CONCRETE INERLOCKING BLOCK SIDEWALK, (TYPE A) PER 10M^2

No.	Description	Specification	Quantity	Unit	Local Cost (Rs)		Foreign Cost (US$)		Remarks
					Rate	Amount	Rate	Amount	
1	Gravel sub-base course	220mm	2.24	CM	719.95	1,615.57			Allow 2% for loss
2	Sand	50mm	0.51	CM	1,060.00	540.60			〃
3	Interlocking tuff tile	50mm	10.00	CM	922.22	9,222.22			including fixing
4	Mason		1	manday	1,455.34	1,455.34			
5	Labor		1	manday	904.14	904.14			
	Net cost					13,737.87	Rs		
						1,373.787	Rs/m^2		

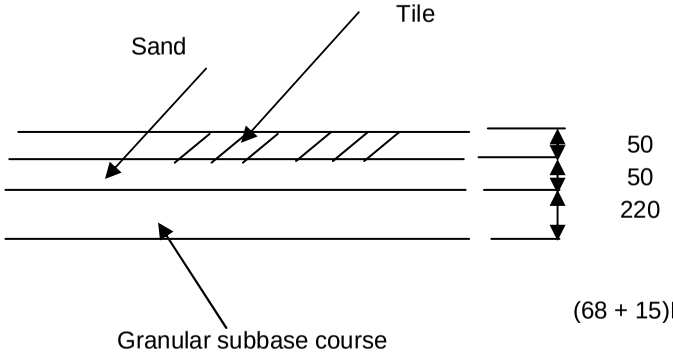

(68 + 15)Rs/ft^2 = 922 Rs/m^2

WEST BANK BYPASS CONSTRUCTION PROJECT

ANALYSIS OF UNIT PRICE

SP16 75mm DIA. PVC PIPE FOR WEEP HOLE IN WALL

No.	Description	Specification	Quantity	Unit	Local Cost (Rs)		Foreign Cost (US$)		Remarks
					Rate	Amount	Rate	Amount	
1	PVC pipe, 4m	75mm	1	No	4,373	4,373			
	Net cost					4,372.55	Rs		
						1,093.14	Rs/m		

WEST BANK BYPASS CONSTRUCTION PROJECT

ANALYSIS OF UNIT PRICE

613a SPRIGGING

No.	Description	Specification	Quantity	Unit	Local Cost (Rs)		Foreign Cost (US$)		Remarks
					Rate	Amount	Rate	Amount	
	Sprigging		100	m^2	300	30,000.00			
	Net cost					30,000.00	Rs		
						300.00	Rs/m^2		

WEST BANK BYPASS CONSTRUCTION PROJECT

ANALYSIS OF UNIT PRICE

612a PLANTING TREES

No.	Description	Specification	Quantity	Unit	Local Cost (Rs)		Foreign Cost (US$)		Remarks
					Rate	Amount	Rate	Amount	
	Hibiscus	h=0.75m	100	each	125	12500			
	Net cost					12,500.00	Rs		
						125.00	Rs/each		

Note: Including digging, planting

WEST BANK BYPASS CONSTRUCTION PROJECT

ANALYSIS OF UNIT PRICE

613b SODDING

No.	Description	Specification	Quantity	Unit	Local Cost (Rs)		Foreign Cost (US$)		Remarks
					Rate	Amount	Rate	Amount	
1	Sodding		100.00	m^2	211.00	21,100.00			
	Net cost					21,100.00	Rs		
						211.00	Rs/m^2		

Note:

WEST BANK BYPASS CONSTRUCTION PROJECT

ANALYSIS OF UNIT PRICE

S16 REMOVAL OF CONCRETE KERB FOR RE-USE INCLUDING HAULING FOR STOCK, PER 100M

No.	Description	Specification	Quantity	Unit	Local Cost (Rs)		Foreign Cost (US$)		Remarks
					Rate	Amount	Rate	Amount	
1	Labor		5.0	manday	904.14	4,520.71			
	Net cost					4,520.71	Rs		
						45.21	Rs/m		

Note:

WEST BANK BYPASS CONSTRUCTION PROJECT

ANALYSIS OF UNIT PRICE

S17 FENCING UNDER BRIDGE , H=2.1M

No.	Description	Specification	Quantity	Unit	Local Cost (Rs)		Foreign Cost (US$)		Remarks
					Rate	Amount	Rate	Amount	
1	Fence	H=1.2m	100.00	m	1,900.00	190,000.00			
2	Foreman		0.20	man·day	2,784.71	556.94			
3	Skilled labor		2.0	man·day	985.20	1,970.40			
4	Labor		4.0	man·day	904.14	3,616.57			
5	Others		1	LS		1,900.00			0.1% of fence
	Net cost					198,043.91			
						1,980.44	Rs/m		

Nonte: Per 100m

WEST BANK BYPASS CONSTRUCTION PROJECT

ANALYSIS OF UNIT PRICE

S18 FORMWORK FOR DRAINAGE STRUCTURE

No.	Description	Specification	Quantity	Unit	Local Cost (Rs)		Foreign Cost (US$)		Remarks
					Rate	Amount	Rate	Amount	
1	Plywood, 12×900×1800		6.17	nr	1,000.00	6,172.84			
2	Carpenter		2.40	manday	1,455.34	3,492.82			
3	Others		1	LS		193.31			2% of the above
	Net cost					9,858.97	Rs		
						985.90	Rs/m^2		

Nonte: Per 10m^2

*1 P11-6 Standard Output, JHA Japan

WEST BANK BYPASS CONSTRUCTION PROJECT

ANALYSIS OF UNIT PRICE

S19 MIXING CONCRETE FOR DRAINAGE WORK

Road work

No.	Description	Specification	Quantity	Unit	Local Cost (Rs)		Foreign Cost (US$)		Remarks
					Rate	Amount	Rate	Amount	
1	Static concrete mixer with hopper	$0.2m^3$	1.00	day	2,205.88	2,205.88			
2	Fuel		13.6	litre	38.05	517.96			
3	Cement		3.6	t	6,100.00	21,693.74			Allow 5% of loss
4	Crushed stone		7.1	m^3	1,304.00	9,274.96			〃
5	Sand		5.1	m^3	1,060.00	5,385.33			〃
6	Operator		1.0	manday	985.20	985.20			
7	Labor		10.0	manday	904.14	9,041.42			
	Net cost					49,104.48	Rs/day		
						4,910.45	Rs/m^3		

Note: Average mixing volume per day, D 10.00 $m^{3/}$day
Mixing capacity, Q 2 m^3/hour
Operating hours 5.50 h including 30min idling time

WEST BANK BYPASS CONSTRUCTION PROJECT

ANALYSIS OF UNIT PRICE

S20 CUTTING GROUND BY MANUAL

No.	Description	Specification	Quantity	Unit	Local Cost (Rs)		Foreign Cost (US$)		Remarks
					Rate	Amount	Rate	Amount	
	Labour		2.30	manday	904.14	2,079.53			
	Net cost					2,079.53			
						207.95	Rs/m^3		

Note: Per $10m^3$

P47 Standard unit outputs, Ministruy of Work, Japan

WEST BANK BYPASS CONSTRUCTION PROJECT

ANALYSIS OF UNIT PRICE

S21 EXCAVATION BY MANUAL

No.	Description	Specification	Quantity	Unit	Local Cost (Rs)		Foreign Cost (US$)		Remarks
					Rate	Amount	Rate	Amount	
	Labour		3.90	manday	904.14	3,526.15			
	Net cost					3,526.15			
						352.62	Rs/m^3		

Note: Per $10m^3$

P47 Standard unit outputs, Ministruy of Work, Japan

WEST BANK BYPASS CONSTRUCTION PROJECT

ANALYSIS OF UNIT PRICE

S22 LOADING BY MANUAL

No.	Description	Specification	Quantity	Unit	Local Cost (Rs)		Foreign Cost (US$)		Remarks
					Rate	Amount	Rate	Amount	
	Labour		1.30	manday	904.14	1,175.38			
	Net cost					1,175.38			
						117.54	Rs/m^3		

Note: Per $10m^3$

P47 Standard unit outputs, Ministruy of Work, Japan

WEST BANK BYPASS CONSTRUCTION PROJECT

ANALYSIS OF UNIT PRICE

S23 BACKFILLING BY MANUAL

No.	Description	Specification	Quantity	Unit	Local Cost (Rs)		Foreign Cost (US$)		Remarks
					Rate	Amount	Rate	Amount	
	Labour		2.30	manday	904.14	2,079.53			
	Net cost					2,079.53			
						207.95	Rs/m^3		

Note: Per $10m^3$

P47 Standard unit outputs, Ministruy of Work, Japan

WEST BANK BYPASS CONSTRUCTION PROJECT

ANALYSIS OF UNIT PRICE

EQUIPMENT COST FOR EARTH WORK

E01 HAULING EARTH BY DUMP TRUCK PER KM·M^3

No.	Description	Specification	Quantity	Unit	Local Cost (Rs)		Foreign Cost (US$)		Remarks
					Rate	Amount	Rate	Amount	
1	Hiring cost of dump truck	10t	0.010	hr	727.71	7.28			1/Q
2	Fuel		0.12	litre	38.05	4.68			Fuel consumption per hour/Q
	Net cost					11.96	Rs/Km·m^3		

Note: Hauling capacity

$$Q = \frac{C \times 60 \times F \times E}{t_1+t_2+t_3+t_4} = 100.00 \ m^3/h$$

C = loading capacity, 10t/1.8t/m^3	5.56	m^3	
F = road condition	1		
E = Efficiency of work	0.9	m	
t_1 = time required for loading, n × cm	0	min.	
t_2 = waiting time for loading	0	min.	
t_3 = hauling time	3.0	min.	1km/20km
t_4 = waiting time of unloading	0	min.	

*1 P7-25 Standard Output, JHA Japan

WEST BANK BYPASS CONSTRUCTION PROJECT

ANALYSIS OF UNIT PRICE

E02 HAULING SUBGRADE MATERIAL, DISTANCE=3KM

No.	Description	Specification	Quantity	Unit	Local Cost (Rs)		Foreign Cost (US$)		Remarks
					Rate	Amount	Rate	Amount	
1	Dump truck	10t	0.074	hr	727.71	53.53			1/Q
2	Fuel		0.90	litre	38.05	34.42			Fuel consumption per hour/Q
	Net cost					87.95	Rs/m^3		

Note: Hauling capacity

$$Q = \frac{C \times 60 \times F \times E}{t_1+t_2+t_3+t_4} = 13.60 \text{ m3/h}$$

C = loading capacity, 10t/1.8t/m^3 5.56 m^3

F = road condition 1

E = Efficiency of work 0.9 m

t_1 = time required for loading, n × cm 8.1 min.

t_2 = waiting time for loading 2.5 min.

t_3 = hauling time 9.0 min. 3km/20km

t_4 = waiting time of unloading 2.5 min.

*1 P7-25 Standard Output, JHA Japan

Number of cycle time of loading by backhoe

$$n = \frac{C \times L}{q \times k \times E} = 24.2$$

C = loading capacity in loose material 7.78 m^3 5.56*L

L = earth coefficient 1.4

q = bucket capacity 0.6 m^3

k = bucke coefficint 1

E = Efficiency of work 0.75

cm = cycle time 20 secant

*1 P7-15 Standard Output, JHA Japan

WEST BANK BYPASS CONSTRUCTION PROJECT

ANALYSIS OF UNIT PRICE

E03 FORMATION OF EMBANKMENT FROM ROADWAY EXCAVATION IN COMMON MATERIAL, L=500M

No.	Description	Specification	Quantity	Unit	Local Cost (Rs)		Foreign Cost (US$)		Remarks
					Rate	Amount	Rate	Amount	
1	Excavation and loading by backhoe	$0.6m^3$	1	m^3	62.01	62.01			E04
2	Hauling earth by dump truck	10t	1	m^3	58.06	58.06			E05
3	Leveling and compaction by buldozer	20t	1	m^3	42.68	42.68			E06
	Net cost					162.75	Rs/m^3		

WEST BANK BYPASS CONSTRUCTION PROJECT

ANALYSIS OF UNIT PRICE

E04 **EXCAVATION AND LOADING MATERIAL OTHER THAN ROCK OR ARTIFICIAL HARD MATERIAL BY BACKHOE (0.6m^3)**

No.	Description	Specification	Quantity	Unit	Local Cost (Rs)		Foreign Cost (US$)		Remarks
					Rate	Amount	Rate	Amount	
1	Hiring cost of backhoe	0.6m^3	0.333	day	18,602.05	6200.68			100/D, E28
	Net cost					6,200.68			
						62.01	Rs/m^3		

Note: Work volume per day, D 300 m^3/day
Per 100m^3

* P19 Standard unit outputs, Ministruy of Work, Japan

WEST BANK BYPASS CONSTRUCTION PROJECT

ANALYSIS OF UNIT PRICE

E05 HAULING EARTH BY DUMP TRUCK (0.5km DISTANCE)

No.	Description	Specification	Quantity	Unit	Local Cost (Rs)		Foreign Cost (US$)		Remarks
					Rate	Amount	Rate	Amount	
1	Hiring cost of dump truck	10t	0.049	hr	727.71	35.33			1/Q
2	Fuel		0.60	litre	38.05	22.72			fuel consumption per hour/Q
	Net cost					58.06	Rs/m^3		

Note: Hauling capacity

$$Q = \frac{C \times 60 \times F \times E}{t_1+t_2+t_3+t_4} = 20.60 \text{ m3/h}$$

C = loading capacity, 10t/1.8t/m^3	5.56	m^3	
F = road condition	1		
E = Efficiency of work	0.9	m	
t_1 = time required for loading, n × cm	8.1	min.	
t_2 = waiting time for loading	2.5	min.	
t_3 = hauling time	1.5	min.	0.5km/20km
t_4 = waiting time of unloading	2.5	min.	

*1 P7-25 Standard Output, JHA Japan

Number of cycle time of loading by backhoe

$$n = \frac{C \times L}{q \times k \times E} = 24.2$$

C = loading capacity in loose material	7.78	m^3	5.56 × L
L = earth coefficient	1.4		
q = bucket capacity	0.6	m^3	
k = bucke coefficint	1		
E = Efficiency of work	0.75		
cm = cycle time	20	secant	

*1 P7-15 Standard Output, JHA Japan

WEST BANK BYPASS CONSTRUCTION PROJECT

ANALYSIS OF UNIT PRICE

E06 SPREADING AND COMPACTION BY BULLDOZER, 20t (per m^3)

No.	Description	Specification	Quantity	Unit	Local Cost (Rs)		Foreign Cost (US$)		Remarks
					Rate	Amount	Rate	Amount	
1	Hiring cost of bulldozer	20t	0.002	day	23,982.64	39.97			1/D, E29
2	Labor		0.003	man·day	904.14	2.71			D1/100
	Net cost					42.68	Rs/m^3		

Note: Work volume per day, D 600 m^3/day

Labor required, D1 0.3 man·day/100m^3

* P36 Standard unit outputs, Ministruy of Work, Japan

WEST BANK BYPASS CONSTRUCTION PROJECT

ANALYSIS OF UNIT PRICE

E07 LOADING LOOSE MATERIAL OTHER THAN ROCK OR ARTIFICIAL HARD MATERIAL BY BACKHOE (0.6m^3)

No.	Description	Specification	Quantity	Unit	Local Cost (Rs)		Foreign Cost (US$)		Remarks
					Rate	Amount	Rate	Amount	
1	Hiring charge	0.6m^3	0.003	day	15,866.47	51.18			1/D, E18
	Net cost					51.18	Rs/m^3		

Note: Work volume per day, D 310 m^3/day

* P19 Standard unit outputs, Ministruy of Work, Japan

WEST BANK BYPASS CONSTRUCTION PROJECT

ANALYSIS OF UNIT PRICE

E08 EXCAVATION OF MATERIAL OTHER THAN ROCK OR ARTIFICIAL HARD MATERIAL BY BULLDOZER, (ICLUDING 60m PUSH)

No.	Description	Specification	Quantity	Unit	Local Cost (Rs)		Foreign Cost (US$)		Remarks
					Rate	Amount	Rate	Amount	
1	Hiring charge of buldozer	20t	0.003	day	19,685.68	61.52			1/D, E26
	Net cost					61.52	Rs/m^3		

Note: Work volume per day, D 320 m^3/day

* P19 Standard unit outputs, Ministruy of Work, Japan

WEST BANK BYPASS CONSTRUCTION PROJECT

ANALYSIS OF UNIT PRICE

E09 BACKFILLING OF STRUCTURE, 1m<W<4.0m

No.	Description	Specification	Quantity	Unit	Local Cost (Rs)		Foreign Cost (US$)		Remarks
					Rate	Amount	Rate	Amount	
1	Labor		4.0	man·day	904.14	3616.57			
2	Equipment cost of backhoe	0.6m3	4.0	hour	2,085.88	8,343.54			E14
3	Equipemnt cost ob vibrating roller	0.8-1.1t	1.35	day	2,108.40	2,846.35			E13
4	Equipment cost of tamper	60-100kg	10.0	m^3	71.74	717.38			E15
	Net cost					15,523.83			
						155.24	Rs/m^3		

Note:

* P23 Standard unit outputs, Ministruy of Work, Japan

WEST BANK BYPASS CONSTRUCTION PROJECT

ANALYSIS OF UNIT PRICE

E10 BACKFILLING OF STRUCTURE, W>4.0m

No.	Description	Specification	Quantity	Unit	Local Cost (Rs)		Foreign Cost (US$)		Remarks
					Rate	Amount	Rate	Amount	
1	Labor		1.6	man·day	904.14	1,446.63			
2	Equipment cost of backhoe	$0.6m^3$	2.8	hour	2,085.88	5,840.48			E14
3	Equipment cost of Vibrating roller	0.8-1.1t	0.92	day	2,108.40	1,939.73			E13
4	Equipment cost of tamper	60-100kg	4.0	m^3	71.74	286.95			E15
	Net cost					9,513.79			
						95.14	Rs/m^3		

Note:

* P23 Standard unit outputs, Ministruy of Work, Japan

WEST BANK BYPASS CONSTRUCTION PROJECT

ANALYSIS OF UNIT PRICE

E11 BACKFILLING OF STRUCTURE W<1.0m

No.	Description	Specification	Quantity	Unit	Local Cost (Rs)		Foreign Cost (US$)		Remarks
					Rate	Amount	Rate	Amount	
1	Labor		4.0	man·day	904.14	3,616.57			
2	Equipment cost of backhoe	$0.6m^3$	6.0	hour	2,085.88	12,515.31			E14
3	Equipment cost of tamper	60-100kg	100.0	m^3	71.74	7,173.80			E15
	Net cost					23,305.68			
						233.06	Rs/m^3		

Note:

P23 Standard unit outputs, Ministruy of Work, Japan

WEST BANK BYPASS CONSTRUCTION PROJECT

ANALYSIS OF UNIT PRICE

E12 EQUIPMENT COST OF TAMPER (60-100kg) (PER DAY)

No.	Description	Specification	Quantity	Unit	Local Cost (Rs)		Foreign Cost (US$)		Remarks
					Rate	Amount	Rate	Amount	
1	Skilled labor		1.0	man·day	985.20	985.20			
2	Hiring charge		1.38	day	180.90	249.64			
3	Fuel		4.50	litre	38.05	171.23			
	Net cost					1,406.07	Rs/day		

Note:

P23 Standard unit outputs, Ministruy of Work, Japan

WEST BANK BYPASS CONSTRUCTION PROJECT

ANALYSIS OF UNIT PRICE

E13 EQUPMENT COST OF VIBRATING ROLLER (0.8-1.1t) (PER DAY)

No.	Description	Specification	Quantity	Unit	Local Cost (Rs)		Foreign Cost (US$)		Remarks
					Rate	Amount	Rate	Amount	
1	Skilled labor		1.0	man·day	985.20	985.20			
2	Hiring charge		1.44	day	642.60	925.34			
3	Fuel		5.20	litre	38.05	197.86			
	Net cost					2,108.40	Rs/day		

Note:

P23 Standard unit outputs, Ministruy of Work, Japan

WEST BANK BYPASS CONSTRUCTION PROJECT

ANALYSIS OF UNIT PRICE

E14 EQUIPMENT COST OF BACKHOE, 0.6M3 PER HOUR

No.	Description	Specification	Quantity	Unit	Local Cost (Rs)		Foreign Cost (US$)		Remarks
					Rate	Amount	Rate	Amount	
1	Backhoe	$0.6m^3$	1.0	hour	1,593.14	1,593.14			
2	Fuel		13.0	litre	38.05	492.75			
	Net cost					2,085.88	Rs/hour		

Note:

WEST BANK BYPASS CONSTRUCTION PROJECT

ANALYSIS OF UNIT PRICE

E15 COMPACTION BY TAMPER (60-100kg)

No.	Description	Specification	Quantity	Unit	Local Cost (Rs)		Foreign Cost (US$)		Remarks
					Rate	Amount	Rate	Amount	
1	Skilled labor		3.0	man·day	985.20	2955.60			
2	Equipment cost		3.0	day	1,406.07	4218.20			E12
	Net cost					7,173.80			
						71.74	Rs/m^3		

Note:

P23 Standard unit outputs, Ministruy of Work, Japan

WEST BANK BYPASS CONSTRUCTION PROJECT

ANALYSIS OF UNIT PRICE

E16 EXCAVATION OF SOFT ROCK BY HYDRAULIC BRAKER

No.	Description	Specification	Quantity	Unit	Local Cost (Rs)		Foreign Cost (US$)		Remarks
					Rate	Amount	Rate	Amount	
1	Equipment cost	$0.6m^3$	0.2	day	21,272.78	3,376.63			10/D, E17
2	Others		1	LS		270.13			8% of equipment cost
	Net cost					3,646.76			
						364.68	Rs/m^3		

Note: Work volume per day, D 63 m^3/day

* P33 Standard unit outputs, Ministruy of Work, Japan

WEST BANK BYPASS CONSTRUCTION PROJECT

ANALYSIS OF UNIT PRICE

E17 EQUIPMENT COST OF BACKHOE WITH BRAKER (PER DAY)

No.	Description	Specification	Quantity	Unit	Local Cost (Rs)		Foreign Cost (US$)		Remarks
					Rate	Amount	Rate	Amount	
1	Hiring charge of backhoe	$0.6m^3$	1.33	day	9,926.47	13,202.21			
2	Fuel		135.0	litre	38.05	5,136.75			
4	Hiring charge of braker	1300kg	1.33	day	2,205.88	2,933.82			
	Net cost					21,272.78	Rs/day		

Note:

P34 Standard unit outputs, Ministruy of Work, Japan

WEST BANK BYPASS CONSTRUCTION PROJECT

ANALYSIS OF UNIT PRICE

E18 EQUIPMENT COST OF FOUNDATION EXCAVATION BY BACKHOE (0.6m3), OTHER THAN ROCK OR ARTIFICIAL HARD MATERIAL, (PER DAY)

No.	Description	Specification	Quantity	Unit	Local Cost (Rs)		Foreign Cost (US$)		Remarks
					Rate	Amount	Rate	Amount	
1	Hiring charge of backhoe	$0.6m^3$	1.48	day	9,926.47	14,691.18			
2	Fuel		110.0	litre	38.05	1,175.29			
	Net cost					15,866.47	Rs/day		

Note:

P20 Standard unit outputs, Ministruy of Work, Japan

WEST BANK BYPASS CONSTRUCTION PROJECT

ANALYSIS OF UNIT PRICE

E19 FOUNDATION EXCAVATION BY BACKHOE (0.6m3), OTHER THAN ROCK OR ARTIFICIAL HARD MATERIAL

No.	Description	Specification	Quantity	Unit	Local Cost (Rs)		Foreign Cost (US$)		Remarks
					Rate	Amount	Rate	Amount	
1	Equipment cost	$0.6m^3$	0.45	day	15,866.47	7212.03			100/D, E18
	Net cost					7,212.03			
						72.12	Rs/m^3		

Note: Work volume per day, D 220 m^3/day

P20 Standard unit outputs, Ministruy of Work, Japan

WEST BANK BYPASS CONSTRUCTION PROJECT

ANALYSIS OF UNIT PRICE

E20 COMPACTION BY VIBRATING ROLLER, 3-4T

No.	Description	Specification	Quantity	Unit	Local Cost (Rs)		Foreign Cost (US$)		Remarks
					Rate	Amount	Rate	Amount	
1	Hiring charge of vibraiton roller	3-4t	0.83	day	7,795.02	6,495.85			100/D, E25
	Net cost					6,495.85			
						64.96	Rs/m^3		

Note: Work volume per day, D 120 m^3/day

* P38 Standard unit outputs, Ministruy of Work, Japan

WEST BANK BYPASS CONSTRUCTION PROJECT

ANALYSIS OF UNIT PRICE

E21 SPREADING BY BULLDOZER, 15t

No.	Description	Specification	Quantity	Unit	Local Cost (Rs)		Foreign Cost (US$)		Remarks
					Rate	Amount	Rate	Amount	
1	Hiring charge of bulldozer	15t	0.14	day	19,685.68	2,853.00			100/D, E26
	Net cost					2,853.00			
						28.53	Rs/m^3		

Note: Work volume per day, D 690 m^3/day

* P36 Standard unit outputs, Ministruy of Work, Japan

WEST BANK BYPASS CONSTRUCTION PROJECT

ANALYSIS OF UNIT PRICE

E22 COMPACTION BY TYRED ROLLER , 8-20t

No.	Description	Specification	Quantity	Unit	Local Cost (Rs)		Foreign Cost (US$)		Remarks
					Rate	Amount	Rate	Amount	
1	Hiring charge of tyred roller	8-20t	0.63	day	11,230.09	7,018.81			100/D, E24
	Net cost					7,018.81			
						70.19	Rs/m^3		

Note: Work volume per day, D 160 m^3/day

* P37 Standard unit outputs, Ministruy of Work, Japan

WEST BANK BYPASS CONSTRUCTION PROJECT

ANALYSIS OF UNIT PRICE

E23 EQUIPMENT COST OF GRADER (PER DAY)

No.	Description	Specification	Quantity	Unit	Local Cost (Rs)		Foreign Cost (US$)		Remarks
					Rate	Amount	Rate	Amount	
1	Motor grader	3.1m	1.45	day	9,705.88	14,073.53			
2	Fuel		54.0	litre	38.05	2,054.70			
	Net cost					16,128.23	Rs/day		

Note:

* P471 Standard unit outputs, Ministruy of Work, Japan

WEST BANK BYPASS CONSTRUCTION PROJECT

ANALYSIS OF UNIT PRICE

E24 EQUIPMENT COST OF TYRE ROLLER, 8-20t (PER DAY)

No.	Description	Specification	Quantity	Unit	Local Cost (Rs)		Foreign Cost (US$)		Remarks
					Rate	Amount	Rate	Amount	
1	Tyre roller	8-20t	1.49	day	6,617.65	9,860.29			
2	Fuel		36.0	litre	38.05	1,369.80			
	Net cost					11,230.09	Rs/day		

Note:

* P471 Standard unit outputs, Ministruy of Work, Japan

WEST BANK BYPASS CONSTRUCTION PROJECT

ANALYSIS OF UNIT PRICE

E25 EQUIPMENT COST OF VIBRATING ROLLER, 3-4t (PER DAY)

No.	Description	Specification	Quantity	Unit	Local Cost (Rs)		Foreign Cost (US$)		Remarks
					Rate	Amount	Rate	Amount	
1	Vibrating roller	3-4t	1.52	day	4,852.94	7,376.47			
2	Fuel		11.0	litre	38.05	418.55			
	Net cost					7,795.02	Rs/day		

Note:

* P471 Standard unit outputs, Ministruy of Work, Japan

WEST BANK BYPASS CONSTRUCTION PROJECT

ANALYSIS OF UNIT PRICE

E26 EQUIPMENT COST OF BULLDOZER, 15t (PER DAY)

No.	Description	Specification	Quantity	Unit	Local Cost (Rs)		Foreign Cost (US$)		Remarks
					Rate	Amount	Rate	Amount	
1	Bulldoxer	15t	1.55	day	9,926.47	15,386.03			
2	Fuel		113.0	litre	38.05	4,299.65			
	Net cost					19,685.68	Rs/day		

Note:

* P39 Standard unit outputs, Ministruy of Work, Japan

WEST BANK BYPASS CONSTRUCTION PROJECT

ANALYSIS OF UNIT PRICE

E27 EQUIPMENT COST OF BULLDOZER, 20t, EXCAVATION AND PUSHING (PER DAY)

No.	Description	Specification	Quantity	Unit	Local Cost (Rs)		Foreign Cost (US$)		Remarks
					Rate	Amount	Rate	Amount	
1	Bulldozer	20t	1.83	day	11,029.41	20,183.82			
2	Fuel		158.0	litre	38.05	6,011.90			
	Net cost					26,195.72	Rs/day		

Note:

* P20 Standard unit outputs, Ministruy of Work, Japan

WEST BANK BYPASS CONSTRUCTION PROJECT

ANALYSIS OF UNIT PRICE

E28 EQUIPMENT COST OF BACKHOE, 0.6M3 , EXCAVATION AND LOADING (PER DAY)

No.	Description	Specification	Quantity	Unit	Local Cost (Rs)		Foreign Cost (US$)		Remarks
					Rate	Amount	Rate	Amount	
1	Backhoe	20t	1.46	day	9,926.47	14,492.65			
2	Fuel		108.0	litre	38.05	4,109.40			
	Lubricant								
	Net cost					18,602.05			

Note:

* P20 Standard unit outputs, Ministruy of Work, Japan

WEST BANK BYPASS CONSTRUCTION PROJECT

ANALYSIS OF UNIT PRICE

E29 EQUIPMENT COST OF BULLDOZER, 20t, SPREADING AND COMPACTION (PER DAY)

No.	Description	Specification	Quantity	Unit	Local Cost (Rs)		Foreign Cost (US$)		Remarks
					Rate	Amount	Rate	Amount	
1	Bulldozer	20t	1.55	day	11,029.41	17,095.59			
2	Fuel		181.0	litre	38.05	6,887.05			
	Net cost					23,982.64	Rs/day		

Note:

* P39 Standard unit outputs, Ministruy of Work, Japan

WEST BANK BYPASS CONSTRUCTION PROJECT

ANALYSIS OF UNIT PRICE

E30 SPREADING BY GRADER

No.	Description	Specification	Quantity	Unit	Local Cost (Rs)		Foreign Cost (US$)		Remarks
					Rate	Amount	Rate	Amount	
1	Grader	3.7m	0.0118	hour	1,725.49	20.40			1/Q
2	Fuel		0.15	litre	38.05	5.59			Fuel consumption per hour/Q
	Net cost					25.99	Rs/m^3		

Note: Output of spreading per one layer (15cm)

$$Q = \frac{L \times V \times D \times f \times E}{P} = 84.58 \ m^3/h$$

L = Effective width of brade	2.9	m
V = Speed of grader	2100	m/h
D = Completed thickness	0.15	m
f = 1/C	1.11	C = 0.9 including all loesses during construction
E = Efficiency of work	0.5	
P = number of pass	6	

*1 P7-31 Standard Output, JHA Japan

WEST BANK BYPASS CONSTRUCTION PROJECT

ANALYSIS OF UNIT PRICE

E31 EQUIPMENT COST FOR CONCRETE/MORTAR SPRAY (PER HOUR)

No.	Description	Specification	Quantity	Unit	Local Cost (Rs)		Foreign Cost (US$)		Remarks
					Rate	Amount	Rate	Amount	
1	Hiring charge of mortar spray	0.8-1.2m^3	1.0	hour	271.61	271.61			
2	Hiring charge of compressor	10.^{5}m3/min.	1.0	hour	1,397.06	1,397.06			
3	Hiring charge of generator	20kW	1.0	hour	1,029.41	1,029.41			
4	Hiring charge of mixer	200L	1.0	hour	588.24	588.24			
5	Equipment for supply admixture		1.0	hour	228.64	228.64			
6	Belt conveyor	7m	1.0	hour	1,575.63	1,575.63			
7	Watertank	3000L	1.0	hour	133.33	133.33			Purchase price Rs 40,000
8	Fuel for mortar spray		3.4	litre	38.05	130.82			
9	Fuel for compressor		14.7	litre	38.05	560.93			
10	Fuel for mixer		3.2	litre	38.05	121.68			
11	Fuel for belt conveyor		0.62	litre	38.05	23.44			
	Net cost								
	Net cost					6,060.79	Rs/hour		

Note:

*1 P10-20 Standard Output, JHA Japan

ANALYSIS OF UNIT PRICE

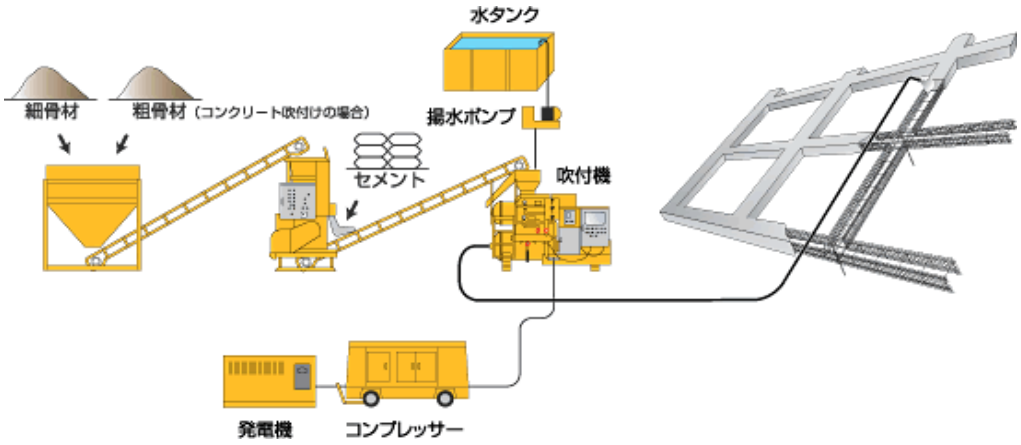

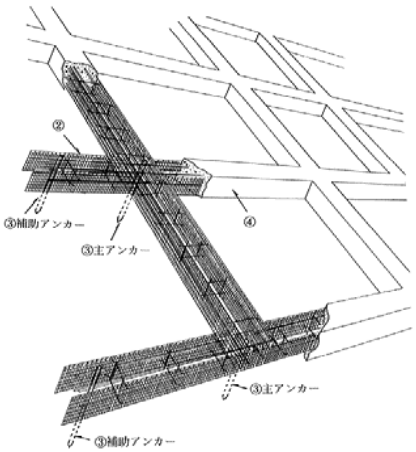

WEST BANK BYPASS CONSTRUCTION PROJECT

ANALYSIS OF UNIT PRICE

E32 COMPACTION BY VIBRATING ROLLER 8-10t (PER M^3)

No.	Description	Specification	Quantity	Unit	Local Cost (Rs)		Foreign Cost (US$)		Remarks
					Rate	Amount	Rate	Amount	
1	Vibrating roller	8-10t	0.0120	hour	1,470.59	17.69			1/Q
2	Fuel		0.14	litre	38.05	5.36			Fuel consumption per hour/Q
	Net cost					23.05	Rs/m^3		

Note: Output of compaction per one layer (15cm)

$$Q = \frac{L \times V \times D \times f \times E}{P} = 83.13 \ m^3/h$$

L = Effective width of brade	1.9	m
V = Speed of grader	3500	m/h
D = Completed thickness	0.15	m
f = 1/C	1.11	
E = Efficiency of work	0.6	
P = number of pass	8	

*1 P7-32 Standard Output, JHA Japan

WEST BANK BYPASS CONSTRUCTION PROJECT

ANALYSIS OF UNIT PRICE

E33 EQUIPMENT COST OF ROUGH TERRAIN CRANE (35T) (PER DAY)

No.	Description	Specification	Quantity	Unit	Local Cost (Rs)		Foreign Cost (US$)		Remarks
					Rate	Amount	Rate	Amount	
1	Rough terrain crane	35t	1.0	day	13,235.29	13,235.29			
2	Fuel		116.73	litre	38.05	4,441.70			
	Net cost					17,677.00	Rs/day		

WEST BANK BYPASS CONSTRUCTION PROJECT

ANALYSIS OF UNIT PRICE

E34 EQUIPMENT COST OF BACKHOE, 0.2M^3 (PER DAY)

No.	Description	Specification	Quantity	Unit	Local Cost (Rs)		Foreign Cost (US$)		Remarks
					Rate	Amount	Rate	Amount	
1	Backhoe	0.2m^3	1.52	day	6,617.65	10,058.82			Crawler type
2	Fuel		38.0	litre	38.05	1,445.90			
	Net cost					11,504.72	Rs/day		

Note:

P 45 Standard unit outputs, Ministruy of Work, Japan

WEST BANK BYPASS CONSTRUCTION PROJECT

ANALYSIS OF UNIT PRICE

E35 EXCAVATION AND LOADING BY BACKHOE, 0.2M^3, W<1.0M (SMALL EARTH WORK)

No.	Description	Specification	Quantity	Unit	Local Cost (Rs)		Foreign Cost (US$)		Remarks
					Rate	Amount	Rate	Amount	
1	Backhoe	0.2m^3	0.26	day	11,504.72	3,027.56			10/D, E34
	Net cost					3,027.56			
						302.76	Rs/m^3		

Note: Average working volume per day, D = 38 m^3

P43 Standard unit outputs, Ministruy of Work, Japan

WEST BANK BYPASS CONSTRUCTION PROJECT

ANALYSIS OF UNIT PRICE

SP513 b CONCRETE CRIB WITH ROCK BOLT (PER 1,021.0M^2)

No.	Description	Specification	Quantity	Unit	Local Cost (Rs)		Foreign Cost (US$)		Remarks
					Rate	Amount	Rate	Amount	
1	Drilling anchor hole		286	m	4,148.76	1,186,544.53			E36-1
2	Installation of sub anchor		825	nr	421.67	347,876.69			E-36-2
3	Shifting machine		286	nr	1,483.03	424,145.26			E36-3
4	Installotion of main anchor		286	nr	1,483.03	424,145.26			E36-4
5	Grouting		21	m^3	26,709.35	554,174.06			E36-5
6	Anchor bar D32 with plate and nut		286	nr	1,269.74	363,144.72			
7	Cleaning slope		1,021	m^2	32.36	33,041.35			S01-1
8	Placing re-bar and wire mesh		1,466	m	1,084.79	1,590,299.36			S01-2
9	Spray mortar		116	m^3	15,249.04	1,776,208.45			S01-4
10	Grouted stone pitching		722	m^2	1,736	1,254,187.27			CSR Rate, 511b2 x 2
	Net cost					7,953,766.96			
						7,790.17	Rs/m^2		

Note: Material per 1,021.0m^2

Wire mesh h =30cm	995	m
Re-bar, D16	6,677	kg
Sub anchor bar, D20, L=120cm	825	No
Main anchor, D25 L=300cm	286	No
Area to be filled with grouted stone	722.3	m^2
Shotcrete	89.6	m^3

*1 P10-18 Standard Output, JHA Japan

Adjustment of September 2006 CSR Rate (MANSEHRA)

Mix proportion of material per m^3

W/C	Water	Cement	Sand
%	kg	kg	kg
55%	220	400	1,675

D25x3.00m		2,228		P63
Nut		42		
Anchor plate		220		
	Total	¥2,490	1,269.74	Rs/nr

WEST BANK BYPASS CONSTRUCTION PROJECT

ANALYSIS OF UNIT PRICE

E36-1 DRILLING ANCHOR HOLE ON SLOPE BY ROTARY PERCUSSION DRILL (PER 10M), SOFT ROCK

No.	Description	Specification	Quantity	Unit	Local Cost (Rs)		Foreign Cost (US$)		Remarks
					Rate	Amount	Rate	Amount	
1	Foreman		0.46	manday	2,784.71	1,280.97			
	Skilled labor		0.46	manday	9,254.12	4,256.89			From abroad
	Labour		0.92	manday	904.14	831.81			
	Renting charge of percussion drill	55kW, 1.3t	0.46	day	24,735.00	11,378.10			¥48,500
	Fuel		11.04	litre	38.05	420.07			24litre/day, 0.429litre/kw.h
	Dilapidation of parts per 10m drilling								
	Shank rod	95mm	0.05	nr	34,272	1,713.60			¥67,200
	Adapter	95mm	0.04	nr	57,120	2,284.80			¥112,000
	Drill pipe	95x1500mm	0.19	nr	25,449	4,835.31			¥49,900
	Living bit	95mm	0.20	nr	25,347	5,069.40			¥49,700
	Water スイーベル	95mm	0.02	nr	64,260	1,285.20			¥126,000
				LS					19% on labor and drilling machine
	Rough terrain crane	35t	0.46	day	13,235	6,088.24			
	Fuel		53.69733333	litre	38.05	2,043.18			
		33.3468							
	Net cost					41,487.57			
						4,148.76	Rs/m		

Note:

06-1

P165 Standard unit outputs, Ministruy of Work, Japan

WEST BANK BYPASS CONSTRUCTION PROJECT

ANALYSIS OF UNIT PRICE

E36-2 INSTALLATION OF SUBANCHOR, D20, (PER 100 NO)

No.	Description	Specification	Quantity	Unit	Local Cost (Rs)		Foreign Cost (US$)		Remarks
					Rate	Amount	Rate	Amount	
1	Skilled labour		8.60	manday	985.20	8,472.72			
2	Anchor, D20	L=120cm	0.246	t	55,586.00	13,701.39			
3	Hiring charge of compressor	10.5m3	2.00	day	4,191.18	8,382.35			
4	Hiring charge of hand hammer	15kg	8.2	day	718.88	5,894.78			
5	Fuel		118	litre	38.05	4,487.46			
6	Other		1	LS		1,228.16			3% of the above
	Net cost					42,166.87			
						421.67	Rs/each		

Note: Weight of anchor, 100 Nos

0.246 t

*1 P10-19 Standard Output, JHA Japan

WEST BANK BYPASS CONSTRUCTION PROJECT

ANALYSIS OF UNIT PRICE

E36-3 SHIFTING DRILLING MACHINE (PER 10 SHIFTS)

No.	Description	Specification	Quantity	Unit	Local Cost (Rs)		Foreign Cost (US$)		Remarks
					Rate	Amount	Rate	Amount	
1	Foreman		3.13	manday	2,784.71	8,702.21			1*10/D
2	Skilled labour		3.125	manday	9,254.12	28,919.12			1*10/D
3	Labour		6.25	manday	904.14	5,650.89			2*10/D
4	Rough terrain crane	35t	3.1	day	13,235	41,360.29			
5	Fuel		365	litre	38.05	13,880.32			
6	Other		1	LS		2,955.38			3% of the above
	Net cost					101,468.22			
						10,146.82	Rs/each		

Note: Number shift per day, D = 3.2 times

P165 Standard unit outputs, Ministruy of Work, Japan

WEST BANK BYPASS CONSTRUCTION PROJECT

ANALYSIS OF UNIT PRICE

E36-4 INSTALLATION OF MAIN ANCHOR (PER 10 BAR)

No.	Description	Specification	Quantity	Unit	Local Cost (Rs)		Foreign Cost (US$)		Remarks
					Rate	Amount	Rate	Amount	
1	Foreman		0.9	manday	2,784.71	2,506.24			
2	Skilled labour		0.9	manday	9,254.12	8,328.71			
3	Labour		1.8	manday	904.14	1,627.45			
4	Others					2,367.86			19% of worker's cost
	Net cost					14,830.25			
						1,483.03	Rs/bar		

P165 Standard unit outputs, Ministruy of Work, Japan

WEST BANK BYPASS CONSTRUCTION PROJECT

ANALYSIS OF UNIT PRICE

E36-5 GROUTING (PER 10 M^3)

No.	Description	Specification	Quantity	Unit	Local Cost (Rs)		Foreign Cost (US$)		Remarks
					Rate	Amount	Rate	Amount	
1	Foreman		2.4	manday	2,784.71	6,791.97			1*10/D
2	Skilled labour		2.4	manday	9,254.12	22,571.02			1*10/D
3	Labour		4.9	manday	904.14	4,410.45			2*10/D
4	Cement		13.038	t	6100	79,531.80			
5	Admixture		58.671	kg	2488.8	146,020.38			
6	Others					7,767.89			23% of worker's cost
	Net cost					267,093.51			
						26,709.35	Rs/m^3		

Note: Capacity of grout per day, D = 4.1 m^3

Volume of grout

$0.095 \times 0.095 \times 3.14 \times 3.2 \times 3.2/4 =$ 0.0725 m^3

Cement per 10m^3 13.038 t

Admixture per 10m^3 58.671 kg

P165 Standard unit outputs, Ministruy of Work, Japan

WEST BANK BYPASS CONSTRUCTION PROJECT

ANALYSIS OF UNIT PRICE

E36-6 PLACING RE-BAR AND WIRE MESH PER 100M

No.	Description	Specification	Quantity	Unit	Local Cost (Rs)		Foreign Cost (US$)		Remarks
					Rate	Amount	Rate	Amount	
1	Skilled labour		8.00	manday	985.20	7,881.60			
2	Labour		4.00	manday	904.14	3,616.57			
3	Re-bar		0.24	t	55,586.00	13,340.64			
4	Wire mesh		100	m	836.40	83,640.00			¥1,640
		0.24106412							
	Net cost					108,478.81			
						1,084.79	Rs/m		

Note:

6,677kg*100m^2/1021m^2 = 654.0 kg

*1 P10-19 Standard Output, JHA Japan

Adjustment of September 2006 CSR Rate (MANSEHRA)

WEST BANK BYPASS CONSTRUCTION PROJECT

ANALYSIS OF UNIT PRICE

SP405 a **PC GIRDER, L=29.9M (PER GIRDER)**

No.	Description	Specification	Quantity	Unit	Local Cost (Rs)		Foreign Cost (US$)		Remarks
					Rate	Amount	Rate	Amount	
	Concrete for PC girder	Class D1	87.1	m^3	6,386.81	556,291.44			
	Reinforcement for PC girder		13.9	ton	55,586.00	772,645.36			
	PC STRAND	12.7MM	4.4	ton	113,339.70	498,694.68			
	Net cost					1,827,631.47			
						456,907.87	Rs/girder		

WEST BANK BYPASS CONSTRUCTION PROJECT

ANALYSIS OF UNIT PRICE

407d CAST-IN-PLACE CONCRETE PILES 1.2M INCLUDING, CONCRETE

No.	Description	Specification	Quantity	Unit	Local Cost (Rs)		Foreign Cost (US$)		Remarks
					Rate	Amount	Rate	Amount	
	Drilling		1	m	5,805.53	5,805.53			
	Concrete	A3	1.24344	m^3	5,438.63	6,762.61			Akllow 10 % for loss
	Net cost					12,568.14	Rs/m		

WEST BANK BYPASS CONSTRUCTION PROJECT

ANALYSIS OF UNIT PRICE

SP504 a **FLARED TYPE HEADWALL CAST-IN-PLACE CONCRETE PILES 1.2M INCLUDING, CONCRETE**

No.	Description	Specification	Quantity	Unit	Local Cost (Rs)		Foreign Cost (US$)		Remarks
					Rate	Amount	Rate	Amount	
	Concrete		1.56	m3	5,061.02	7,895.19			
	Reinforcing steel		0.187	t	52,646.00	9,844.80			
	Formwork		6.01	m2	985.90	5,922.89			
	Net cost					23,662.88			

Formwork
1.96
4.04

WEST BANK BYPASS CONSTRUCTION PROJECT

ANALYSIS OF UNIT PRICE

613c TOP SOIL

No.	Description	Specification	Quantity	Unit	Local Cost (Rs)		Foreign Cost (US$)		Remarks
					Rate	Amount	Rate	Amount	
	4t truck		1	day	3,529.41	3,529.41			
	loading topsoil by manual		0.41	manday	904.14	370.70			5.33/1.3/10
	spreading by manual including hauling		3	manday	904.14	2,712.42			
	Soil conditioner		1	bag	1020	1,020.00			￥2000/20kg
	Net cost					7,632.53			
						71.56	Rs/m^2		

Volume of topsoil on a truck

4t/1.5t/m^3 = 2.67 m^3

Production rate per day

2 trips of truck 5.33 m^3

Loading capacity per 10m^3 1.3 manday

Thickness of top soil 5 cm

Area done per day 106.7 m^2

APPENDIX H-4

ANALYSIS OF UNIT RATES FOR MISCELLANEOUS ITEMS

(1) PACKAGE I

WEST BANK BYPASS CONSTRUCTION PROJECT (PACKAGE I)

ANALYSIS OF UNIT RATES FOR MISCELLANEOUS WORK

AMOUNT OF PERFORMANCE SECURITY

No.	Description	Specification	Quantity	Unit	Local Cost (Rs)		Foreign Cost (US$)		Remarks
					Rate	Amount	Rate	Amount	
	Amount of performance security			LS		7,500,000.00			
	Net cost					7,500,000.00			
	Site on cost & overhead, profit	34.289%				2,571,675.00			
	Total					10,071,675.00			

Estimated contract price 1,000,000,000 Rs Net cost

Amount of performance security 0.75 % on contract price 7,500,000.00 Rs

WEST BANK BYPASS CONSTRUCTION PROJECT (PACKAGE I)

ANALYSIS OF UNIT RATES FOR MISCELLANEOUS WORK

THIRD PARTY INSURANCE

No.	Description	Specification	Quantity	Unit	Local Cost (Rs)		Foreign Cost (US$)		Remarks
					Rate	Amount	Rate	Amount	
	Premium		2.8	year	27,600	77280			
	Net cost					77,280.00			
	Site on cost & overhead, profit	34.289%				26,498.54			
	Total					103,778.54			

Worker compensation government law: 200,000 Rs per occurrence

Premium: 690 Rs per one year for five (5) workers

Average number of employment during construction 200 workesr

Premium: 200 x 690/5 = 27,600 Rs/year

Net cost 77,280.00 Rs

WEST BANK BYPASS CONSTRUCTION PROJECT (PACKAGE I)

ANALYSIS OF UNIT RATES FOR MISCELLANEOUS WORK

701a Provide survey and allied instruments

No.	Description	Specification	Quantity	Unit	Local Cost (Rs)		Foreign Cost (US$)		Remarks
					Rate	Amount	Rate	Amount	
	Instruments								
1	Electronic Total Station with accessories		1	nr	495,000.00	495,000			
2	Digital laser theodolite with tripod		2	nr	130,000.00	260,000			
3	Automatic level with tripod		2	nr	32,000.00	64,000			
4	Survey umbrelas		2	nr	800.00	1,600.00			
5	Plumb-bobs, weight approximately 100g with 1.5m cords		2	nr	550.00	1,100.00			
6	Ranging rod, 2m long		4	nr	250.00	1,000.00			
7	Ranging rod, 3m long		4	nr	300.00	1,200.00			
8	30m fiber glass tape		2	nr	700.00	1,400.00			
9	50m steel tape		1	nr	3,200.00	3,200.00			
10	Siege hammer, 2kg weight		2	nr	500.00	1,000.00			
11	Sprit levels, 900mm		1	nr	400.00	400.00			
12	Pangas		2	nr	150.00	300.00			
13	Level staff		2	nr	1,600.00	3,200.00			
	Net cost					833,400.00			
	Site on cost & overhead, profit	34.289%				285,764.53			
	Total					1,119,164.53			

Net cost
833,400.00 Rs

WEST BANK BYPASS CONSTRUCTION PROJECT (PACKAGE I)

ANALYSIS OF UNIT RATES FOR MISCELLANEOUS WORK

701b Maintain survey instruments and provide teams for survey

No.	Description	Specification	Quantity	Unit	Local Cost (Rs)		Foreign Cost (US$)		Remarks
					Rate	Amount	Rate	Amount	
1	Surveyor	1	1	month	95,680.07	95,680.07			
2	Technician	2	2	month	86,493.40	172,986.79			
3	Chainman	2	2	month	63,120.05	126,240.10			
4	Labour	2	2	month	20,493.88	40,987.76			
	Net cost					435,894.72			
	Site on cost & overhead, profit	34.289%				149,463.94			
	Total					585,358.66			

Note: Per month

Net cost
435,894.72 Rs/month

WEST BANK BYPASS CONSTRUCTION PROJECT (PACKAGE I)

ANALYSIS OF UNIT RATES FOR MISCELLANEOUS WORK

SP702a1 Engineer's office (renting)

No.	Description	Specification	Quantity	Unit	Local Cost (Rs)		Foreign Cost (US$)		Remarks
					Rate	Amount	Rate	Amount	
1	Engineer's office/residence (renting)*		1	month	90,000.00	90,000.00			
2	Electricity supply		1	month	30,000.00	30,000.00			
3	Water supply		1	month	12,000.00	12,000.00			
4	Others					13,200.00			10% of the above
	Net cost					145,200.00			
	Site on cost & overhead, profit	34.289%				49,787.63			
	Total					194,987.63			

Note: * 3 beds rooms, 3 rooms for office, kitchin, with furniture total 100m^2 of office space Net cost

Per month 145,200.00 Rs/month

WEST BANK BYPASS CONSTRUCTION PROJECT (PACKAGE I)

ANALYSIS OF UNIT RATES FOR MISCELLANEOUS WORK

SP702a2 Enginer's staff residence (renting)

No.	Description	Specification	Quantity	Unit	Local Cost (Rs)		Foreign Cost (US$)		Remarks
					Rate	Amount	Rate	Amount	
1	Engineer's staff residence (renting)*		1	month	70,000.00	70,000.00			
2	Electricity supply		1	month	20,000.00	20,000.00			
3	Water supply		1	month	9,000.00	9,000.00			
4	Others					9,900.00			10% of the above
	Net cost					108,900.00			
	Site on cost & overhead, profit	34.289%				37,340.72			
	Total					146,240.72			

* 5 bed rooms, dining room, kitchin, with furniture

Net cost
108,900.00 Rs/month

WEST BANK BYPASS CONSTRUCTION PROJECT (PACKAGE I)

ANALYSIS OF UNIT RATES FOR MISCELLANEOUS WORK

SP702a5 Engineer's mobile office

No.	Description	Specification	Quantity	Unit	Local Cost (Rs)		Foreign Cost (US$)		Remarks
					Rate	Amount	Rate	Amount	
1	Mobile office	*1	3	nr	3,000.00	9,000.00			
2	Maintence		1	man.manth	20,493.88	20,493.88			
	Equipment								
	Medium office desks with 6 drawers, two locable		1	nr					
	Tables, approxsimately 1.5x0.8m		1	nr					
	Office chairs with padded seats		3	nr					
	Book shelves with 3 shelves		1	nr					
	2 door metal cupboards, lockable		1	nr					
	Electric kettles		1	nr					
	Net cost					29,493.88			
	Site on cost & overhead, profit	34.289%				10,113.16			
	Total					39,607.03			

*1 20m^2 with toilet

Net cost
29,493.88 Rs/month

WEST BANK BYPASS CONSTRUCTION PROJECT (PACKAGE I)

ANALYSIS OF UNIT RATES FOR MISCELLANEOUS WORK

SP702a3 Employer's office (renting)

No.	Description	Specification	Quantity	Unit	Local Cost (Rs)		Foreign Cost (US$)		Remarks
					Rate	Amount	Rate	Amount	
1	Employer's office/residence (renting)*		1	month	75,000.00	75,000.00			
2	Electricity supply		1	month	20,000.00	20,000.00			
3	Water supply		1	m^2	9,000.00	9,000.00			
4	Others		1			10,400.00			10% of the above
	Net cost					114,400.00			
	Site on cost & overhead, profit	34.289%				39,226.62			
	Total					153,626.62			

* 2 beds rooms, 2 rooms for office, kitchin, with furniture

Net cost
114,400.00 Rs/month

WEST BANK BYPASS CONSTRUCTION PROJECT (PACKAGE I)

ANALYSIS OF UNIT RATES FOR MISCELLANEOUS WORK

SP702a4 Employer's staff residence (renting)

No.	Description	Specification	Quantity	Unit	Local Cost (Rs)		Foreign Cost (US$)		Remarks
					Rate	Amount	Rate	Amount	
1	Employer's staff residence (renting)*		1	month	60,000.00	60,000.00			
2	Electricity supply		1	month	20,000.00	20,000.00			
3	Water supply		1	month	9,000.00	9,000.00			
6	Others					89,000.00			10 of the above
	Net cost					178,000.00			
	Site on cost & overhead, profit	34.289%				61,034.42			
	Total					239,034.42			

* 2 bed rooms, dining room, kitchin, with furniture

Net cost
178,000.00 Rs/month

SP702b
1

Office Equipment and Furniture for Engineer's office(1)

	Equipment		Quantitiy	Unit	Rate (Rs)	Amount (Rs)			
	1. Office Furniture								
	Lockable metal filing cabinet four drawers for drawings		4	nr	13,500	54,000			
	Office table 1m high x 2m x 1m with built-in-drawer and glass top		1	nr	11,700	11,700			
	Cushion chair for the Engineer		1	nr	5,500	5,500			
	Visitor's chair, cushion type		1	nr	3,700	3,700			
	Sofa		1	set	35,000	35,000			
	Steel filing cabinet with four drawers and locking arrangement		4	nr	5,200	20,800			
	Office table 1m high x 1.5m x 0.8m with built-in-drawer, cloth covered		5	nr	6,800	34,000			
	Mobile phone		10	nr	3,000	30,000			
	Revolving chair with arm		5	nr	3,700	18,500			
	Book shelves with 3 shelves		4	nr	3,500	14,000			
	Waste basket		8	nr	200	1,600			
	Conference table, oval shaped, 5m long, 1.2m wide(minimum) and 1.0m		1	nr	25,000	25,000			
	Swivel chair		1	nr	2,500	2,500			
	Cushion chair		11	nr	1,500	16,500			
	Black board 3m x 1m		1	nr	5,500	5,500			
	Curtain for all windows		10	nr	550	5,500			
				Total		283,800			
	Office Equipment and Furniture (2)								
No.	Equipment		Quantity	Unit	Rate(Rs)	Amount (Rs)			
	2. Office Equipment								
	Telephone		2	nr	5,500	11,000			
	Fax machine		1	nr	7,000	7,000			
	Desk top computer complete		5	nr	40,050	200,250			
	Printer (A3 size)		1	nr	14,800	14,800			
	Photocopy machine (A3 size)		1	nr	75,000	75,000			
	Refrigerators (200 liter)		1	nr	30,000	30,000			
	Two door metal cupboards, lockable		1	nr	8,000	8,000			
	Electric kettle		1	nr	1,500	1,500			

WEST BANK BYPASS CONSTRUCTION PROJECT (PACKAGE I)

ANALYSIS OF UNIT RATES FOR MISCELLANEOUS WORK

	Kitchen utensil as directed		1	nr	10,000	10,000			
				Total		357,550			
	Net cost					641,350.00			
	Site on cost & overhead, profit	34.289%				219,912.50			
	Total					861,262.50			

Net cost
641,350.00 Rs

SP702b
2

Office Equipment and Furniture for Employer's office(1)

	Equipment		Quantitiy	Unit	Rate (Rs)	Amount (Rs)			
	1. Office Furniture								
	Lockable metal filing cabinet four drawers for drawings		2	nr	13,500	27,000			
	Office table 1m high x 2m x 1m with built-in-drawer and glass top		1	nr	11,700	11,700			
	Cushion chair for the Engineer		1	nr	5,500	5,500			
	Visitor's chair, cushion type		1	nr	3,700	3,700			
	Sofa		1	set	35,000	35,000			
	Steel filing cabinet with four drawers and locking arrangement		2	nr	5,200	10,400			
	Office table 1m high x 1.5m x 0.8m with built-in-drawer, cloth covered		2	nr	6,800	13,600			
	Mobile phone		4	nr	3,000	12,000			
	Revolving chair with arm		2	nr	3,700	7,400			
	Book shelves with 3 shelves		1	nr	3,500	3,500			
	Waste basket		4	nr	200	800			
	Conference table, oval shaped, 5m long, 1.2m wide(minimum) and 1.0m		1	nr	25,000	25,000			
	Swivel chair		1	nr	2,500	2,500			
	Cushion chair		11	nr	1,500	16,500			
	Black board 3m x 1m		1	nr	5,500	5,500			
	Curtain for all windows		8	nr	550	4,400			
				Total		184,500			
	Office Equipment and Furniture (2)								
No.	Equipment		Quantity	Unit	Rate(Rs)	Amount (Rs)			
	2. Office Equipment								
	Telephone		1	nr	5,500	5,500			
	Fax machine		1	nr	7,000	7,000			
	Desk top computer complete		2	nr	40,050	80,100			
	Printer (A3 size)		1	nr	14,800	14,800			
	Photocopy machine (A3 size)		1	nr	75,000	75,000			
	Refrigerators (200 liter)		1	nr	30,000	30,000			
	Two door metal cupboards, lockable		1	nr	8,000	8,000			
	Electric kettle		1	nr	1,500	1,500			

WEST BANK BYPASS CONSTRUCTION PROJECT (PACKAGE I)

ANALYSIS OF UNIT RATES FOR MISCELLANEOUS WORK

	Kitchen utensil as directed		1	nr	10,000	10,000			
				Total		231,900			
	Net cost					416,400.00			
	Site on cost & overhead, profit	34.289%				142,779.40			
	Total					559,179.40			

Net cost
416,400.00 Rs

WEST BANK BYPASS CONSTRUCTION PROJECT (PACKAGE I)

ANALYSIS OF UNIT RATES FOR MISCELLANEOUS WORK

SP702c 1 **Maintain Engineer's site office**

No.	Description	Specification	Quantity	Unit	Local Cost (Rs)		Foreign Cost (US$)		Remarks
					Rate	Amount	Rate	Amount	
1	Security		2	man·month	22,698.68	45,397.36			
2	House maintenance		1	man·month	20,493.88	20,493.88			
	Net cost					65,891.24			
	Site on cost & overhead, profit	34.289%				22,593.45			
	Total					88,484.68			

Net cost
65,891.24 Rs

WEST BANK BYPASS CONSTRUCTION PROJECT (PACKAGE I)

ANALYSIS OF UNIT RATES FOR MISCELLANEOUS WORK

SP702c 2 **Maintain Engineer's housing**

No.	Description	Specification	Quantity	Unit	Local Cost (Rs)		Foreign Cost (US$)		Remarks
					Rate	Amount	Rate	Amount	
4	Security		2	man·month	22,698.68	45,397.36			
5	House maintenance		1	man·month	20,493.88	20,493.88			
	Net cost					65,891.24			
	Site on cost & overhead, profit	34.289%				22,593.45			
	Total					88,484.68			

Net cost
65,891.24 Rs.month

WEST BANK BYPASS CONSTRUCTION PROJECT (PACKAGE I)

ANALYSIS OF UNIT RATES FOR MISCELLANEOUS WORK

SP702c3 **Maintain Employer's Site office**

No.	Description	Specification	Quantity	Unit	Local Cost (Rs)		Foreign Cost (US$)		Remarks
					Rate	Amount	Rate	Amount	
4	Security		2	man·month	22,698.68	45,397.36			
5	House maintenance		1	man·month	20,493.88	20,493.88			
	Net cost					65,891.24			
	Site on cost & overhead, profit	34.289%				22,593.45			
	Total					88,484.68			

Net cost
65,891.24 Rs/month

WEST BANK BYPASS CONSTRUCTION PROJECT (PACKAGE I)

ANALYSIS OF UNIT RATES FOR MISCELLANEOUS WORK

SP702c 4 **Maintain Employer's housing**

No.	Description	Specification	Quantity	Unit	Local Cost (Rs)		Foreign Cost (US$)		Remarks
					Rate	Amount	Rate	Amount	
4	Security		2	man·month	22,698.68	45,397.36			
5	House maintenance		1	man·month	20,493.88	20,493.88			
	Net cost					65,891.24			
	Site on cost & overhead, profit	34.289%				22,593.45			
	Total					88,484.68			

Net cost
65,891.24 Rsmonth

WEST BANK BYPASS CONSTRUCTION PROJECT (PACKAGE I)

ANALYSIS OF UNIT RATES FOR MISCELLANEOUS WORK

SP703a Provide material testing laboratory

No.	Description	Specification	Quantity	Unit	Local Cost (Rs)		Foreign Cost (US$)		Remarks
					Rate	Amount	Rate	Amount	
	Laboratory as shown on the Drawing		120	m^2	20,000.00	2,400,000.00			
	Net cost					2,400,000.00			
	Site on cost & overhead, profit	34.289%				822,936.00			
	Total					3,222,936.00			

Net cost

2,400,000.00 Rs

WEST BANK BYPASS CONSTRUCTION PROJECT (PACKAGE I)

ANALYSIS OF UNIT RATES FOR MISCELLANEOUS WORK

SP703b Equip and furnish project laboratory

No.	Description	Specification	Quantity	Unit	Local Cost (Rs)		Foreign Cost (US$)		Remarks
					Rate	Amount	Rate	Amount	
	Furniture								
1	Writing desks with lockable drawers		1	nr	6,800.00	6,800.00			
2	Chairs		2	nr	2,500.00	5,000.00			
3	4-drawer lockable steel filing cabinet		1	nr	5,200.00	5,200.00			
4	Lockable cupboard		1	nr	2,000.00	2,000.00			
5	Electric kettle		1	nr	1,700.00	1,700.00			
	Equipment								
						955,339.00			
	Net cost					976,039.00			
	Site on cost & overhead, profit	34.289%				334,674.01			
	Total					1,310,713.01			

Net cost
976,039.00 Rs

WEST BANK BYPASS CONSTRUCTION PROJECT (PACKAGE I)

ANALYSIS OF UNIT RATES FOR MISCELLANEOUS WORK

SP703c Maintenance laboratory

No.	Description	Specification	Quantity	Unit	Local Cost (Rs)		Foreign Cost (US$)		Remarks
					Rate	Amount	Rate	Amount	
	Labour		3	man·month	20,493.88	61,481.63			
	Consumable (sand bag, gas, etc)		1	LS	10,000.00	10,000.00			
	Net cost					71,481.63			
	Site on cost & overhead, profit	34.289%				24,510.34			
	Total					95,991.97			

Net cost
71,481.63 Rs/month

WEST BANK BYPASS CONSTRUCTION PROJECT (PACKAGE I)

ANALYSIS OF UNIT RATES FOR MISCELLANEOUS WORK

SP708a2 Provision of Employer's vehicle

No.	Description	Specification	Quantity	Unit	Local Cost (Rs)		Foreign Cost (US$)		Remarks
					Rate	Amount	Rate	Amount	
	Car		1	nr	4,024,000.00	4,024,000.00			Including registration, insurance
	Net cost					4,024,000.00			
	Site on cost & overhead, profit	34.289%				1,379,789.36			
	Total					5,403,789.36			

Note:

Net cost
4,024,000.00 Rs

WEST BANK BYPASS CONSTRUCTION PROJECT (PACKAGE I)

ANALYSIS OF UNIT RATES FOR MISCELLANEOUS WORK

SP708a1 Provision of Engineer's vehicle

No.	Description	Specification	Quantity	Unit	Local Cost (Rs)		Foreign Cost (US$)		Remarks
					Rate	Amount	Rate	Amount	
	Car		1	nr	2,384,000.00	2,384,000.00			Including registration, insurance
	Net cost					2,384,000.00			
	Site on cost & overhead, profit	34.289%				817,449.76			
	Total					3,201,449.76			

Note:

Net cost
2,384,000.00 Rs

WEST BANK BYPASS CONSTRUCTION PROJECT (PACKAGE I)

ANALYSIS OF UNIT RATES FOR MISCELLANEOUS WORK

SP708b2 Maintenance of Employer's vehicle per month

No.	Description	Specification	Quantity	Unit	Local Cost (Rs)		Foreign Cost (US$)		Remarks
					Rate	Amount	Rate	Amount	
1	Fuel		1,000	litre	38.05	38,050			
2	Lubricant		1	LS		1,903			5% of fuel
3	Driver's wage		1	month	26,373.35	26,373			
4	Others, wearing parts		1			1,142			3% of fuel
	Net cost					67,467.35			
	Site on cost & overhead, profit	34.289%				23,133.88			
	Total					90,601.23			

Note: Assumed travelled kilometer for a month 7,000.0 km

kilometer available for one litre of fuel 7.0 km

Fuel consumption per month 1,000.0 litre

Net cost

67,467.35 Rs/month

WEST BANK BYPASS CONSTRUCTION PROJECT (PACKAGE I)

ANALYSIS OF UNIT RATES FOR MISCELLANEOUS WORK

SP708b1 Maintenance of Engineer's vehicle per month

No.	Description	Specification	Quantity	Unit	Local Cost (Rs)		Foreign Cost (US$)		Remarks
					Rate	Amount	Rate	Amount	
1	Fuel		1,167	litre	38.05	44,392			
2	Lubricant		1	LS		2,220			5% of fuel
3	Driver's wage		1	month	26,373.35	26,373			
4	Others, wearing parts		1			1,332			3% of fuel
	Net cost					74,316.35			
	Site on cost & overhead, profit	34.289%				25,482.33			
	Total					99,798.68			

Note:	kilometer travelled for a month	7,000.0 km	Net cost	
	kilometer available for one litre of fuel	6.0 km	74,316.35	Rs/month
	Fuel consumption per month	1,166.7 litre		

WEST BANK BYPASS CONSTRUCTION PROJECT (PACKAGE I)

ANALYSIS OF UNIT RATES FOR MISCELLANEOUS WORK

TESTING EQUIPEMNT

No.	Description	Specification	Quantity	Unit	Local Cost (Rs)		Foreign Cost (US$)		Remarks
					Rate	Amount	Rate	Amount	
	Compaction Test (AASHTO T.99. AASHTO T. 180)								
1	Compaction mould complete with base plate extension collar, 101.6mm internal dia. x 116.4 mm high.		6		1,256	7,536			
2	Compaction mould 152.4 mm dia. x 116.43 mm high complete with base plate and extension collar		6		1,600	9,600			
3	2.495 kg compaction hammer, drop-regulated to 304.8 mm		2		1,100	2,200			
4	4.536 kg compaction hammer drop-regulated to 457.2 mm		1		1,600	1,600			
5	Aggregate compaction mould		2			0			Not available
6	Straight edge 300 mm long with handles		2		450	900			
	Density Test (AASHTO T-191, T-238 and T-239)								
1	Galvanized metal tray 1 m x 0.5 m x 75 mm deep		2		1,600	3,200			
2	75 mm brush		2		95	190			
3	Semi-automatic balance, 15 kg capacity, accurate to 1 g, including		1		16,000	16,000			
4	20 mm Sieve, 300 mm diametre		2		560	1,120			
5	Stop-clock		1		450	450			
6	Metal containers (450 mm dia.)		4		350	1,400			
7	Metal tray with 150 mm dia. hole in the centre. 300 mm x 300 mm square, or equivalent area		2		350	700			
8	Metal tray with 200 mm dia. hole in the centre. 300 mm x 300 mm square, or equivalent area		2		600	1,200			
9	Steel pegs for fixing tray in position		20		5	100			
10	Sand pouring cylinder, 150 mm dia.		2		400	800			

ANALYSIS OF UNIT RATES FOR MISCELLANEOUS WORK

11	Sand pouring cylinder, 200 mm dia.		2		400	800			
12	Cold steel chisel 20 mm x 300 mm long		4		150	600			
13	Cold steel chisel 10 mm x 250 mm long		4		120	480			
14	1.8 kg hammer		2		150	300			
15	Scoop for removing excavated material from hole, 250 mm long		4		90	360			
16	100 mm brush, soft		2		65	130			
17	50 mm brush, soft		2		45	90			
18	Calibrating can 150 mm dia. x 150 mm deep		2		2,200	4,400			
19	Calibrating can 200 mm dia. x 150 mm deep		2		3,500	7,000			
20	Polystyrene container jars, with neck 125 mm dia. and 4 litre capacity		10		200	2,000			
	Liquid Limit Apparatus to AASHTO T-89 and T-90								
1	Casagrande liquid limit apparatus with grooving tool		1		3,200	3,200			
2	Spatula with 150 mm long blade		2		49	98			
3	Grooving tool of ASTM type		2		150	300			
	CBR Test (AASHTO T-193)								
1	CBR mould, 127 mm high, complete with perforated base plate and extension collar 50.8 mm high that can be fitted to either end of the mould		8		1,600	12,800			
2	Perforated swell plate with an adjustable centre post of rust-proofed steel provided with a lock-nut		8		1,200	9,600			
3	2-1/4 kg split surcharge weight		4		400	1,600			
4	2- 1/4 kg annular surcharge weight		4		400	1,600			
5	Solid base plate for CBR mould		2		600	1,200			
6	Static compaction displacer discs 1 No x 61.4 mm, 1 No x 50.8 mm and 2 No x 28.8 mm thick		1		1,800	1,800			
7	Disc lifting handle		1		100	100			

WEST BANK BYPASS CONSTRUCTION PROJECT (PACKAGE I)

ANALYSIS OF UNIT RATES FOR MISCELLANEOUS WORK

8	Static compaction press, 50 tons capacity with an adjustable platten speed between 1 m/min. (Hydraulic or mechanical operation and hand-		1		165,000	165,000			
9	CBR load frame (electric and hand-operated)		1		85,000	85,000			
10	Stabilising bar for the above		1						Not available
11	Proving ring for above 10 kN capacity		1		59,000	59,000			
	28kN capacity		1		65,000	65,000			
12	Penetration gauge range 0-25 mm		6		950	5,700			
13	CBR piston, including bracket		1						Not available
14	Swell measurement tripod complete with gauge calibrated in 0.01 mm		1		3,500	3,500			
15	Tamping bar, steel 13 mm dia. 380 mm long		1		900	900			
16	Soaking tank for CBR mould sufficient for 50 moulds		1		22,000	22,000			
	Specific Gravity of Aggregate (AASHTO T-84)								
1	Wire mesh basket with apertures not greater than 6.5 mm, large enough to take 2.5 kg of aggregate		1		1,200	1,200			
2	Stout watertight container in which the basket can be freely suspended under water		2		2,200	4,400			
3	Airtight container of similar capacity to the basket		2		3,200	6,400			
4	Shallow tray of area not less than 0.065 m^2		2						Not available
5	Pycometer of 1 litre capacity		2		900	1,800			
6	5 kg balance accurate to 0.1 g capable of suspending the basket, plus sample in the watertight container		1		9,500	9,500			
7	Soft absorbent cloth (tea towel)		20		250	5,000			
	Sieve Analysis (AASHTO T-27)								

WEST BANK BYPASS CONSTRUCTION PROJECT (PACKAGE I)

ANALYSIS OF UNIT RATES FOR MISCELLANEOUS WORK

1	Sieve 300 mm dia. in sizes 75, 63.5, 50.8, 37.5, 25, 19, 12.7, 9.5, 6.35, and 4.75 mm, plus lid and receiver		1		600	600			
2	Sieve 200 mm dia. in sizes 2.36, 1.18, 0.60, 0.30, 0.15 and 0.075mm, plus lid and receiver		1		600	600			
3	Electric sieve shaker		1		16,000	16,000			
	Concrete: Slump and Cube Manufacture (AASHTO T-119)								
1	Slump cone, tamping rod and base-		1		950	950			
2	Air entrainment meter		1		12,500	12,500			
3	Concrete cube mould, 150 mm cube		24		1,200	28,800			
4	Soaking tank for cubes with capacity for 50 cubes		1		18,000	18,000			
5	Laboratory mixer		1		22,000	22,000			
6	Laboratory vibrator		1		26,000	26,000			
	Concrete: Compression Testing (AASHTO T-221)								
1	Concrete compression machine, hand-operated with 300 mm gauge, rectangular platens, capacity 1,560 kN		1		90,000	90,000			
2	Safety guard		1						Not avaialble
3	50 mm distance piece		2		3,500	7,000			
4	70 mm distance piece		2		4,500	9,000			
5	100 mm distance piece		2		7,000	14,000			
6	Mechanical load pacer		1						Not available
	Miscellaneous Equipment								
1	1m x 1m x 75mm deep galvanized metal tray		2		1,600	3,200			
2	450mm x 450mm x 9mm plate glass		3		550	1,650			
3	Moisture content tin, 75mm dia. aluminum-plated		30		50	1,500			
4	Palette knife 200mm blade		2		250	500			
5	Measuring cylinder set, 25ml, 100ml, 1,000ml, 2,000ml		1		2,100	2,100			
6	Electronic balance capacity 1,000g, accurate to 0.01g		1		28,000	28,000			

WEST BANK BYPASS CONSTRUCTION PROJECT (PACKAGE I)

ANALYSIS OF UNIT RATES FOR MISCELLANEOUS WORK

7	Balance 2,000g capacity accuracy to 0.1g (manual) including weights		1		7,500	7,500			
8	Balance 50kg capacity accurate to 20g, including weights		1		8,500	8,500			
9	Vernier calipers, 250mm		1		1,100	1,100			
10	Mercury thermometer, ranging 10 degrees to 150 degrees℃		1		35	35			
11	Maximum and minimum thermometer		1		650	650			
12	Rain gauge		1		1,800	1,800			
13	Pocket dial thermometer, +50 degrees to +250 degrees℃, accurate to ±3% with 0.1m long stem		1		450	450			
14	Oven, electric thermostatically controlled to any temperature between 60 degrees and 149 degrees℃, approximate dimensions 50cm high, 50cm wide and 40cm deep, fitted with four adjustable shelves		1		85,000	85,000			
15	3 metre straight edge, including calibrated wedges		1		2,600	2,600			
16	Schmidt concrete test hammer		1		28,000	28,000			
17	Sieve brush		2		40	80			
18	Dustpan brush		2		75	150			
19	1.5kg hammer		2		110	220			
20	Wheel barrow		2		2,800	5,600			
21	Shovel		2		350	700			
22	Pick axe		2		350	700			
	Net cost					955,339			

WEST BANK BYPASS CONSTRUCTION PROJECT (PACKAGE I)

ANALYSIS OF UNIT RATES FOR MISCELLANEOUS WORK

SP711 ENVIRONMENT MONITORING (PACKAGE I) per month

No.	Description	Specification	Quantity	Unit	Local Cost (Rs)		Foreign Cost (US$)		Remarks
					Rate	Amount	Rate	Amount	
1	Air quality monitoring	*1	66	place	47,000.00	3,102,000.00			2 places
2	Meteorological survey	*2	66	place	3,000.00	198,000.00			2 places
3	Noise level monitoring	*3	66	place	1,000.00	66,000.00			2 places
4	Equipment mobilization and transportatation charges		33	place	25,000.00	825,000.00			
5	Vehicle pollution inspector (G-men)		330	man·day	2,784.71	918,953.64			10 days/month
	Net cost					5,109,953.64			
	Site-on-cost, overhead & profit	34.289%				1,752,152.00	Rs		
	Total					6,862,105.64	Rs		
						Net cost			
						154,847.08	Rs/month		
						207,942.60	Rs/month		

Note: *1 TSP, CO, SO_2, NO_2, PM 1 time/month for each time 3 hrs × 3days

*2 Air temperature, Air humidity, Wind speed, Wind direction 1 time/month for each time 3 hrs × 3days

*3 places 1 time/month

Monitoring period = 33 months

WEST BANK BYPASS CONSTRUCTION PROJECT (PACKAGE I)

ANALYSIS OF UNIT RATES FOR MISCELLANEOUS WORK

SP712 Erection of sign boards

No.	Description	Specification	Quantity	Unit	Local Cost (Rs)		Foreign Cost (US$)		Remarks
					Rate	Amount	Rate	Amount	
1	80 mm di. steel pipe	t=2.8mm	0.111	t	55,000.00	6,097			
2	L50x50x6		0.084	t	55,000.00	4,629			
3	PL 3.0mm		0.141	t	68,000.00	9,608			
4	Vinyl banner	3.0x2.0m	6.0	m^2	17,000.00	102,000.00			
5	Mechanic		3.0	manday	1,455.34	4,366			
6	Labour		6.0	manday	904.14	5,424.85			
7	Excavation	by manual	0.144	m^3	904.14	130.20			
8	Concrete	Lean concrete	0.144	m^3	0.00	0.00			
9	4t truck with crane		0.5	day	3,529.41	1,764.71			
10	Fuel		28.7	litre	38.05	1,091.97			
11	Others					6,116.74			5% of material cost
	Net cost					141,229.32			
	Site on cost & overhead, profit	34.289%				48,426.12			
	Total					189,655.44			

Note: Volume of excavation, 0.3x0.3x0.4 0.144 m3

Net cost
141,229.32 Rs

WEST BANK BYPASS CONSTRUCTION PROJECT (PACKAGE I)

ANALYSIS OF UNIT RATES FOR MISCELLANEOUS WORK

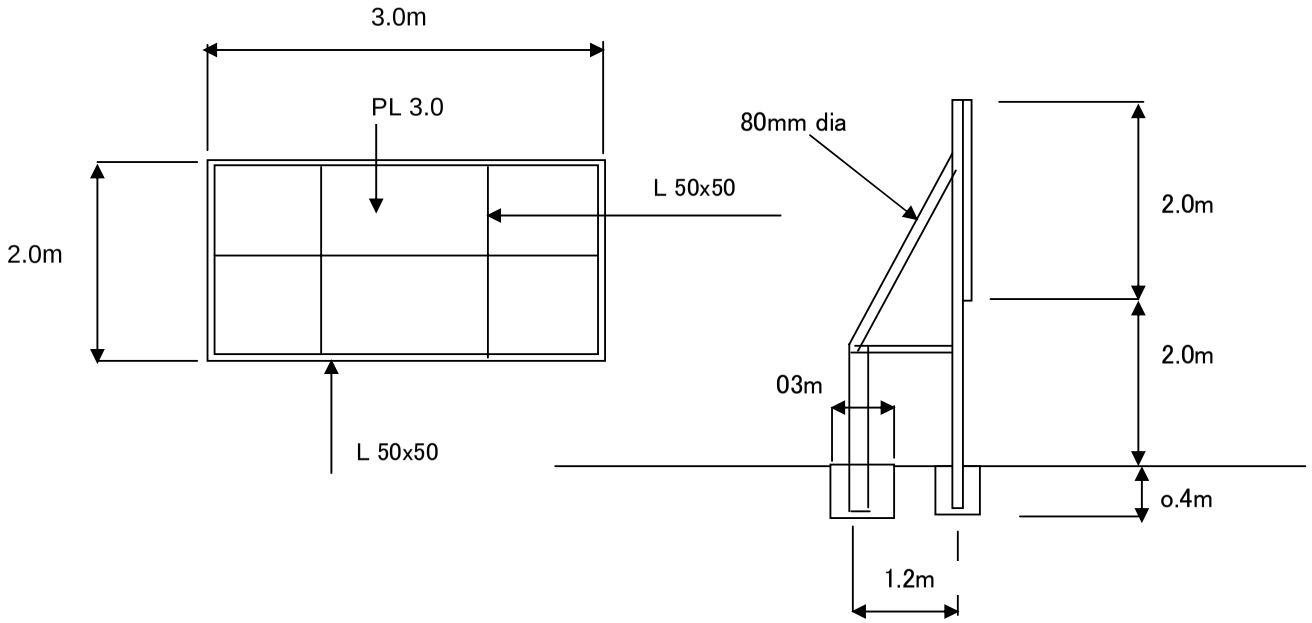

		Unit weight	Weight
PL 3.0	$6.0m^2$	23.55 kg/m^2	141.3 kg
L50x50x6	19m	4.43 kg/m	84.17 kg
89.1mm dia. t=2.8mm	18.6m	5.96 kg/m	110.86 kg
4.3x2	8.6		
3.8x2	7.6		
1.2x2	2.4		

WEST BANK BYPASS CONSTRUCTION PROJECT (PACKAGE I)

ANALYSIS OF UNIT RATES FOR MISCELLANEOUS WORK

705a CONSTRUCTION OF TEMPORARY ROAD (INTER SECTION 1)

No.	Description	Specification	Quantity	Unit	Local Cost (Rs)		Foreign Cost (US$)		Remarks
					Rate	Amount	Rate	Amount	
	Excavation of surplus soft rock material		900	m^3	242.1885	217969.65			106d
	Compaction of natural ground		900	m^2	87.3815	78643.35			104
	Granular subbase		2520	m^2	719.9495	1814272.7			201
	Aggregate base		2520	m^2	981.9052	2474401.1			202
	Triple surface dressing		1960	m^2	141.4071	277157.92			304c
	Pavement marking		300	m	69.6881	20906.43			608h
	Installatlon of barrier								
	Net cost					4,883,351.19	Rs		
	Site on cost & overhead, profit	34.289%				1,674,452.29			
	Total					6,557,803.48			

Excavation of surplus soft rock materi	$30m^3$*30m	900	m^3
Compaction of natural ground	9.0*100m	900	m^2
Granular subbase	9.0*280m	2520	m^2
Aggregate base	9.0*280m	2520	m^2
Triple surface dressing	7.0*280m	1960	m^2
Pavement marking		300	m

WEST BANK BYPASS CONSTRUCTION PROJECT (PACKAGE I)

ANALYSIS OF UNIT RATES FOR MISCELLANEOUS WORK

705a CONSTRUCTION OF TEMPORARY ROAD (PLANT YARD, P3)

No.	Description	Specification	Quantity	Unit	Local Cost (Rs)		Foreign Cost (US$)		Remarks
					Rate	Amount	Rate	Amount	
	Widening existing road	15t bulldozer	15	day	19685.679	295,285.19			
	Compaction of natural ground	3-4t vibro	15	day	7795.0206	116,925.31			
	Net cost					412,210.50			
	Site on cost & overhead, profit	34.289%				141,342.86			
	Total					553,553.36			

WEST BANK BYPASS CONSTRUCTION PROJECT (PACKAGE I)

ANALYSIS OF UNIT RATES FOR MISCELLANEOUS WORK

705b Maintenance of temporary road

No.	Description	Specification	Quantity	Unit	Local Cost (Rs)		Foreign Cost (US$)		Remarks
					Rate	Amount	Rate	Amount	
	Security	2 person	12	month	45,397.36	544,768.31			
	Grading by dozer	15t	75	day	19,685.68	1,476,425.96			25month × 3day
	Net cost					2,021,194.26	Rs		
	Site on cost & overhead, profit	34.289%				693,047.30			
	Total					2,714,241.56			

WEST BANK BYPASS CONSTRUCTION PROJECT (PACKAGE I)

ANALYSIS OF UNIT RATES FOR MISCELLANEOUS WORK

SP710a Ground preparation of camp yard

No.	Description	Specification	Quantity	Unit	Local Cost (Rs)		Foreign Cost (US$)		Remarks
					Rate	Amount	Rate	Amount	
	Renting yard	100x50m	32	month	250,000.00	8,000,000.00			50Rs/m^2month
	Demolision of building		90	m^3	424.57	38,210.89			510
	Net cost					8,038,210.89			
	Site on cost & overhead, profit	34.289%				2,756,222.13			
	Total					10,794,433.02			

WEST BANK BYPASS CONSTRUCTION PROJECT (PACKAGE I)

ANALYSIS OF UNIT RATES FOR MISCELLANEOUS WORK

706 CONTROL AND PROTECTION OF TRAFFIC

No.	Description	Specification	Quantity	Unit	Local Cost (Rs)		Foreign Cost (US$)		Remarks
					Rate	Amount	Rate	Amount	
1	Security		4	manmonth	22,698.68	90,794.72			4 security per month
2	Others		1	LS	3,000.00	3,000.00			
	Net cost					93,794.72			
	Site on cost & overhead, profit	34.289%				32,161.27			
	Total					125,955.99			

WEST BANK BYPASS CONSTRUCTION PROJECT (PACKAGE I)

ANALYSIS OF UNIT RATES FOR MISCELLANEOUS WORK

SP710 b **MOBILIZATION AND DEMOBILIZATION OF EQUIPMENT & MATERIAL** **per month**

No.	Description	Specification	Quantity	Unit	Local Cost (Rs)		Foreign Cost (US$)		Remarks
					Rate	Amount	Rate	Amount	
				LS					
1	Transportation of material and equipment					10,834,931			1
2	Cost of general purpose equipment					8,181,065			2
	Net cost					19,015,996.60			

Note:

(2) PACAKGE II

WEST BANK BYPASS CONSTRUCTION PROJECT (PACKAGE II)

ANALYSIS OF RATES FOR MISCELLANEOUS WORK

SP710a GROUND PREPARATION OF CAMP YARD

No.	Description	Specification	Quantity	Unit	Local Cost (Rs)		Foreign Cost (US$)		Remarks
					Rate	Amount	Rate	Amount	
1	Renting land, 50mx30m		23	month	45,000.00	1,035,000.00			50Rs/m^2month
2	Grading	15t bulldozer	5.0	day	19,685.68	98,428.40			
3	Fuel		920	liter	38.05	35,002.83			
4	Labor		50.0	manday	904.14	45,207.08			
	Net cost					1,213,638.31	Rs		
	Site-on-cost, overhead & profit	25.000%				303,409.58	Rs		
	Total					1,517,047.89	Rs		

WEST BANK BYPASS CONSTRUCTION PROJECT (PACKAGE II)

ANALYSIS OF RATES FOR MISCELLANEOUS WORK

SP710 b MOBILIZATION & DEMOBILIZATION OF EQUIPMENT

No.	Description	Specification	Quantity	Unit	Local Cost (Rs)		Foreign Cost (US$)		Remarks
					Rate	Amount	Rate	Amount	
	Preliminary works								
	Office rental		1	LS	2,050,000.00	2,050,000.00			3
	Maintenance of office		25	Month	50,987.76	1,274,693.88			4
	Renting land for temporary work		12	Month	36,000.00	432,000.00			5
	Development of borrow area		1	LS	663,925.79	663,925.79	4,420,619.66		6
	Mobilization and demobilization of equipment								
	Generator	45kW	1		20,000.00	20,000.00			
	Bulldozer	15t	1		35000	35,000.00			
	Bulldozer	21t	1		35000	35,000.00			
	Excavator	0.6m3	1		35000	35,000.00			
	Wheel shovel	$2.1m^3$	1		35000	35,000.00			
	Tire roller	8-20t	1		20000	20,000.00			
	Vibrating roller	8-10t	1		20000	20,000.00			
	Static concrete mixer	$0.2m^3$	2		10000	20,000.00			
	Grader		1		35000	35,000.00			
	Dump truck	10t	3		30000	90,000.00			
	Concrete transit mixer	$4.5m^3$	2		25,000.00	50,000.00			
	Transportation and installation of concrete aggregate hopper with conveyor	1 bay	1		200,000	200,000.00			
	Crane	35t	1		35000	35,000.00			
	Other equipments		LS			2,061,524.00			
	Net cost					7,112,143.66	Rs		
	Site-on-cost, overhead & profit	25.000%				1,778,035.92	Rs		
	Total					8,890,179.58	Rs		8,890,180

WEST BANK BYPASS CONSTRUCTION PROJECT (PACKAGE II)

ANALYSIS OF RATES FOR MISCELLANEOUS WORK

1 OFFICE RENTAL

No.	Description	Specification	Quantity	Unit	Local Cost (Rs)		Foreign Cost (US$)		Remarks
					Rate	Amount	Rate	Amount	
1	Renting house		25	month	70,000.00	1,750,000.00			
2	Office furniture		1	LS	300,000.00	300,000.00			
	Net cost					2,050,000.00			
	Site-on-cost, overhead & profit	25.000%				512,500.00	Rs		
	Total					2,562,500.00	Rs		

WEST BANK BYPASS CONSTRUCTION PROJECT (PACKAGE II)

ANALYSIS OF RATES FOR MISCELLANEOUS WORK

2 MAINTENANCE OF OFFICE

No.	Description	Specification	Quantity	Unit	Local Cost (Rs)		Foreign Cost (US$)		Remarks
					Rate	Amount	Rate	Amount	
1	Maintenance	2-Labour	1	month	40,987.76	40,987.76			20,493.88
2	Consumable		1	month	10,000.00	10,000.00			
	Net cost					50,987.76	Rs/month		
	Site-on-cost, overhead & profit	25.000%				12,746.94	Rs		
	Total					63,734.69	Rs		

WEST BANK BYPASS CONSTRUCTION PROJECT (PACKAGE II)

ANALYSIS OF RATES FOR MISCELLANEOUS WORK

3 RENTING LAND FOR TEMPORARY WORK

No.	Description	Specification	Quantity	Unit	Local Cost (Rs)		Foreign Cost (US$)		Remarks
					Rate	Amount	Rate	Amount	
1	Renting land, 30m x 20m	3 places	1	month	36,000.00	36,000.00			30Rs/m^2/month
	Net cost					36,000.00	Rs/month		
	Site-on-cost, overhead & profit	25.000%				9,000.00	Rs		
	Total					45,000.00	Rs		

WEST BANK BYPASS CONSTRUCTION PROJECT (PACKAGE II)

ANALYSIS OF RATES FOR MISCELLANEOUS WORK

4 DEVELOPMENT OF BORROW AREA

No.	Description	Specification	Quantity	Unit	Local Cost (Rs)		Foreign Cost (US$)		Remarks
					Rate	Amount	Rate	Amount	
1	Development of borrow pit	20t bulldozer	20	day	26,195.72	523,914.47			
3	Fuel		3,680	liter	38.05	140,011.32			
	Net cost					663,925.79	Rs		
	Site-on-cost, overhead & profit	25.000%				165,981.45	Rs		
	Total					829,907.23	Rs		

WEST BANK BYPASS CONSTRUCTION PROJECT (PACKAGE II)

ANALYSIS OF RATES FOR MISCELLANEOUS WORK

706 CONTROL AND PROTECTION OF TRAFFIC

No.	Description	Specification	Quantity	Unit	Local Cost (Rs)		Foreign Cost (US$)		Remarks
					Rate	Amount	Rate	Amount	
1	Security		4	manmonth	22,698.68	90,794.72			4 security per month
2	Others		1	LS	3,000.00	3,000.00			
	Net cost					93,794.72	Rs/month		
	Site-on-cost, overhead & profit	25.000%				23,448.68	Rs		
	Total					117,243.40	Rs/month		

WEST BANK BYPASS CONSTRUCTION PROJECT (PACKAGE II)

ANALYSIS OF RATES FOR MISCELLANEOUS WORK

SP712 ERECTION OF SIGN BOARD

No.	Description	Specification	Quantity	Unit	Local Cost (Rs)		Foreign Cost (US$)		Remarks
					Rate	Amount	Rate	Amount	
1	80 mm di. steel pipe	t=2.8mm	0.111	t	55,000.00	6,097			
2	L50x50x6		0.084	t	55,000.00	4,629			
3	PL 3.0mm		0.141	t	68,000.00	9,608			
4	Vinyl banner	3.0x2.0m	6.0	m^2	17,000.00	102,000.00			
5	Mechanic		3.0	manday	1,455.34	4,366			
6	Labor		6.0	manday	904.14	5,424.85			
7	Excavation	by manual	0.144	m^3	352.62	50.78			
8	Concrete	A1	0.144	m^3	4,815.35	693.41			
9	4t truck with crane		0.5	day	3,529.41	1,764.71			
10	Fuel		18.0	liter	38.05	686.42			
11	Others					6,116.74			5% of material cost
	Net cost					141,437.76	Rs		
	Site-on-cost, overhead & profit	25.000%				35,359.44	Rs		
	Total					176,797.20	Rs		

Note: Volume of excavation, 0.3x0.3x0.4 0.144 m3

WEST BANK BYPASS CONSTRUCTION PROJECT (PACKAGE II)

ANALYSIS OF RATES FOR MISCELLANEOUS WORK

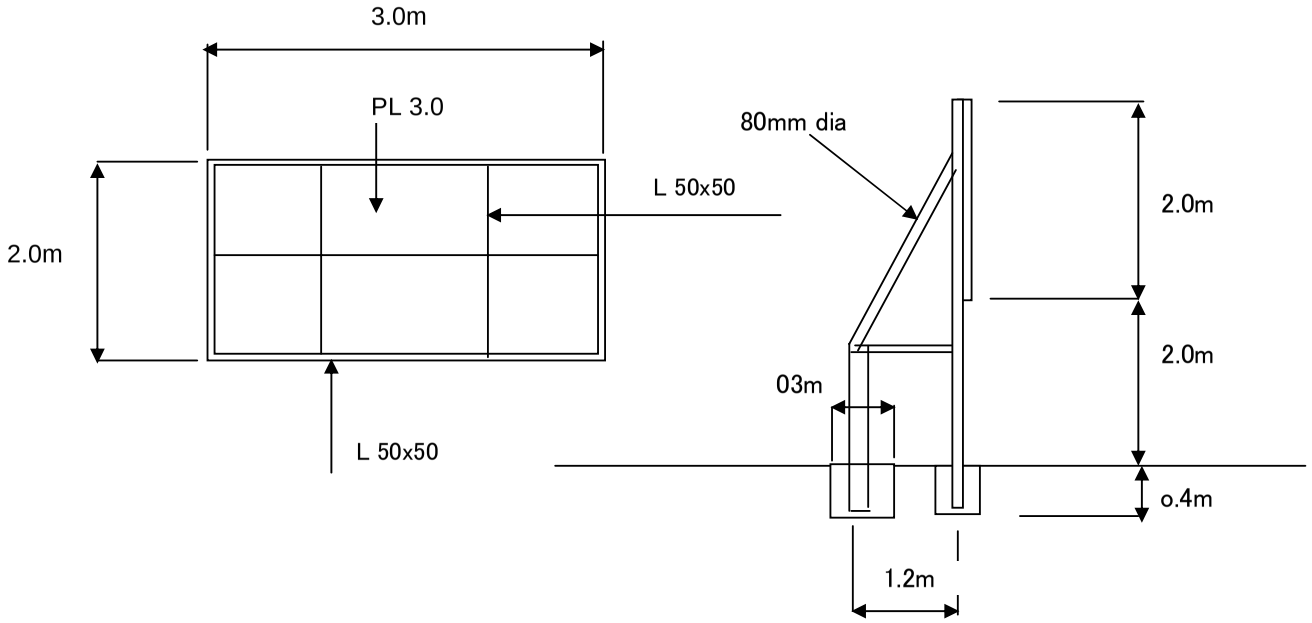

		Unit weight	Weight
PL 3.0	$6.0m^2$	23.55 kg/m^2	141.3 kg
L50x50x6	19m	4.43 kg/m	84.17 kg
89.1mm dia. t=2.8mm	18.6m	5.96 kg/m	110.86 kg
4.3x2	8.6		
3.8x2	7.6		
1.2x2	2.4		

WEST BANK BYPASS CONSTRUCTION PROJECT (PACKAGE II)

ANALYSIS OF RATES FOR MISCELLANEOUS WORK

SP711 ENVIRONMENT MONITORING (PACKAGE II) per month

No.	Description	Specification	Quantity	Unit	Local Cost (Rs)		Foreign Cost (US$)		Remarks
					Rate	Amount	Rate	Amount	
1	Air quality monitoring	*1	50	place	47,000.00	2,350,000.00			2 places
2	Meteorological survey	*2	50	place	3,000.00	150,000.00			2 places
3	Noise level monitoring	*3	50	place	1,000.00	50,000.00			2 places
4	Equipment mobilization and transportation charges		25	place	25,000.00	625,000.00			
5	Vehicle pollution inspector (G-men)		250	man·day	2,784.71	696,177.00			10 days/month
	Net cost					3,871,177.00			
	Site-on-cost, overhead & profit	25.000%				967,794.25	Rs		
	Total					4,838,971.25	Rs		
						Net cost			
						154,847.08	Rs/month		
						193,558.85	Rs/month		

Note: *1 TSP, CO, SO_2, NO_2, PM 1 time/month for each time 3 hrs × 3days

*2 Air temperature, Air humidity, Wind speed, Wind direction 1 time/month for each time 3 hrs × 3days

*3 2 places 1 time/month

Monitoring period = 25 months

APPENDIX H-5

ANALYSIS OF UNIT RATES
ELECTRIC WORKS

WEST BANK BYPASS CONSTRUCTION PROJECT

ANALYSIS OF UNIT RATES FOR ELECTRIC WORKS

SP801a (i) **20 meter high tubular galvanized steel pole with base plate, RCC foundation, J-bolts, junction box and earthing etc**

No.	Description	Specification	Quantity	Unit	Local Cost (Rs)		Foreign Cost (US$)		Remarks
					Rate	Amount	Rate	Amount	
1	20 meter high tubular galvanized steel pole with base plate, RCC foundation, J-bolts, junction box and earthing etc	As per Specfication	1.00	No	238,560.00	238,560.00			
2			0.00	No	0.00	0.00			
3	Transportation and handling Charges4%		1.00	No	9,542.40	9,542.40			
4	Pole Foundation Complete with base plate, RCC foundation, J-bolts, junction box and earthing		1.00	No	148,370.00	148,370.00			
5	Fixing & Erection including Labour, Equipment & Fixing Material 20%		1.00	No	47,712.00	47,712.00			
6	Supplier Over Head & Profit 10%		1.00	No	23,856.00	23,856.00			
	Net cost					468,040.40			
	Site oncost & overhead, profit	25.00%				117,010.10			
	Total					585,050.50			

Note:

WEST BANK BYPASS CONSTRUCTION PROJECT

ANALYSIS OF UNIT RATES FOR ELECTRIC WORKS

SP801a (ii) **10 meter high single arm tubular galvanized steel pole with base plate, RCC foundation, J-bolts, junction box and earthing etc on Bridge. (a)**

No.	Description	Specification	Quantity	Unit	Local Cost (Rs)		Foreign Cost (US$)		Remarks
					Rate	Amount	Rate	Amount	
1	10 meter high single arm tubular galvanized steel pole on Bridge.	As per Specfication	1.00	No	37,350.00	37,350.00			
2	Transportation and handling Charges 2%		1.00	No	747.00	747.00			
3	Pole Foundation Complete with base plate, RCC foundation, J-bolts, junction box and earthing		1.00	No	8,948.00	8,948.00			
4	Fixing & Erection including Labour, Equipment & Fixing Material 10%		1.00	No	3,735.00	3,735.00			
5	Supplier Over Head & Profit 10%		1.00	No	3,735.00	3,735.00			
	Net cost					54,515.00			
	Site oncost & overhead, profit	25.00%				13,628.75			
	Total					68,143.75			

Note:

WEST BANK BYPASS CONSTRUCTION PROJECT

ANALYSIS OF UNIT RATES FOR ELECTRIC WORKS

SP801a (iii) 10 meter high single arm tubular galvanized steel pole with base plate, RCC foundation, J-bolts, junction box and earthing etc on Ground. (b)

No.	Description	Specification	Quantity	Unit	Local Cost (Rs)		Foreign Cost (US$)		Remarks
					Rate	Amount	Rate	Amount	
1	10 meter high single arm tubular galvanized steel pole on Ground.	As per Specfication	1.00	No.	37,350.00	37,350.00			
2	Transportation and handling Charges 2%		1.00	No.	747.00	747.00			
3	Pole Foundation Complete with base plate, RCC foundation, J-bolts, junction box and earthing		1.00	No.	10,230.00	10,230.00			
4	Fixing & Erection including Labour, Equipment & Fixing Material 10%		1.00	No.	3,735.00	3,735.00			
5	Supplier Over Head & Profit 10%		1.00	No.	3,735.00	3,735.00			
	Net cost					55,797.00			
	Site oncost & overhead, profit	25.00%				13,949.25			
	Total					69,746.25			

Note:

WEST BANK BYPASS CONSTRUCTION PROJECT

ANALYSIS OF UNIT RATES FOR ELECTRIC WORKS

SP801b (i) Road lighting luminarie complete with 150 watt H.P. sodium vapour lamp, CW1 ballast, p.f. correction capacitor etc. (a)

No.	Description	Specification	Quantity	Unit	Local Cost (Rs)		Foreign Cost (US$)		Remarks
					Rate	Amount	Rate	Amount	
1	Road lighting luminarie complete with 150 watt H.P. sodium vabour lamp, Imported European Origin CW1 ballast, p.f. correction capacitor etc.European orgin	As per Specfication	1.00	No.	52,750.00	52,750.00			
2	Transportation and handling Charges 1%		1.00	No.	527.50	527.50			
3	Fixing & Erection including Labour, Equipment & Fixing Material 5%		1.00	No.	2,637.50	2,637.50			
4	Supplier Over Head & Profit 10%		1.00	No.	5,275.00	5,275.00			
	Net cost					61,190.00			
	Site oncost & overhead, profit	25.00%				15,297.50			
	Total					76,487.50			

Note:

WEST BANK BYPASS CONSTRUCTION PROJECT

ANALYSIS OF UNIT RATES FOR ELECTRIC WORKS

SP801b (ii) Road lighting luminarie complete with 1000 watt H.P. Sodium vapour Flash Light lamp, CW1 ballast, p.f. correction capacitor etc. with adjustable complete assembly and holding frame. European origin. (b)

No.	Description	Specification	Quantity	Unit	Local Cost (Rs)		Foreign Cost (US$)		Remarks
					Rate	Amount	Rate	Amount	
1	Road lighting luminarie complete with 1000 watt H.P. Sodium vapour Flash Light lamp, CW1 ballast, p.f. correction capacitor etc. European origin.	As per Specfication	1.00	No.	144,000.00	144,000.00			
2	Transportation and handling Charges 1%		1.00	No.	1,440.00	1,440.00			
3	Fixing & Erection including Labour, Equipment & Fixing Material 5%		1.00	No.	7,200.00	7,200.00			
4	Supplier Over Head & Profit 10%		1.00	No.	14,400.00	14,400.00			
	Net cost					167,040.00			
	Site oncost & overhead, profit	25.00%				41,760.00			
	Total					208,800.00			

Note:

WEST BANK BYPASS CONSTRUCTION PROJECT

ANALYSIS OF UNIT RATES FOR ELECTRIC WORKS

SP801c (i) **50mm dia Class B, PVC pipe (Beta or Shavyl) to be laid as per standard practice for laying of cables**

No.	Description	Specification	Quantity	Unit	Local Cost (Rs)		Foreign Cost (US$)		Remarks
					Rate	Amount	Rate	Amount	
1	50mm dia Class B, PVC pipe (Beta or Shavyl) to be laid as per standard practice for laying of cables with accessories	As per Specfication	1.00	m	97.00	97.00			
2	Transportation and handling Charges 2.5%		1.00	m	2.43	2.43			
3	Laying & Fixing including Civil work & all accessories as per Drawing or instruction by Engineer		1.00	m	487.00	487.00			
4	Supplier Over Head & Profit 10%		1.00	m	9.70	9.70			
	Net cost					596.13			
	Site oncost & overhead, profit	25.00%				149.03			
	Total					745.16			

Note:

WEST BANK BYPASS CONSTRUCTION PROJECT

ANALYSIS OF UNIT RATES FOR ELECTRIC WORKS

SP801c (ii) 50mm dia Class B, G.I. pipe (Beta or Shavyl) to be laid as per standard practice for laying of cables

No.	Description	Specification	Quantity	Unit	Local Cost (Rs)		Foreign Cost (US$)		Remarks
					Rate	Amount	Rate	Amount	
1	50mm dia Class B, G.I. pipe (Beta or Shavyl) to be laid as per standard practice for laying of cables with accessories	As per Specfication	1.00	m	327.00	327.00			
2	Transportation and handling Charges 2.5%		1.00	m	8.18	8.18			
3	Laying & Fixing including Civil work & all accessories as per Drawing or instruction by Engineer		1.00	m	185.00	185.00			
4	Supplier Over Head & Profit 10%		1.00	m	32.70	32.70			
	Net cost					552.88			
	Site oncost & overhead, profit	25.00%				138.22			
	Total					691.10			

Note:

WEST BANK BYPASS CONSTRUCTION PROJECT

ANALYSIS OF UNIT RATES FOR ELECTRIC WORKS

SP801c (iii) 150mm dia Class B, RCC pipe Embedded in Class "B" Concrete, Complete with Excavation & Jointing etc.

No.	Description	Specification	Quantity	Unit	Local Cost (Rs)		Foreign Cost (US$)		Remarks
					Rate	Amount	Rate	Amount	
1	150mm dia Class B, RCC pipe	As per Specfication	1.00	m	125.00	125.00			
2	Excavation &Class "B" Concrete,Excavation		1.00	m	950.00	950.00			
3	Transportation and handling Charges		1.00	m	42.00	42.00			
4	Laying & Fixing including Civil work & all accessories as per Drawing or instruction by Engineer		1.00	m	56.00	56.00			
5	Supplier Over Head & Profit 10%		1.00	m	12.50	12.50			
	Net cost					1,185.50			
	Site oncost & overhead, profit	25.00%				296.38			
	Total					1,481.88			

Note:

WEST BANK BYPASS CONSTRUCTION PROJECT

ANALYSIS OF UNIT RATES FOR ELECTRIC WORKS

SP801c (iv) **100mm dia Class B, RCC pipe Embedded in Class "B" Concrete, Complete with Excavation & Jointing etc.**

No.	Description	Specification	Quantity	Unit	Local Cost (Rs)		Foreign Cost (US$)		Remarks
					Rate	Amount	Rate	Amount	
1	100mm dia Class B, RCC pipe	As per Specfication	1.00	m	105.00	105.00			
2	Excavation &Class "B" Concrete,Excavation		1.00	m	817.00	817.00			
3	Transportation and handling Charges		1.00	m	38.00	38.00			
4	Laying & Fixing including Civil work & all accessories as per Drawing or instruction by Engineer		1.00	m	52.00	52.00			
5	Supplier Over Head & Profit 10%		1.00	m	10.50	10.50			
	Net cost					1,022.50			
	Site oncost & overhead, profit	25.00%				255.63			
	Total					1,278.13			

Note:

WEST BANK BYPASS CONSTRUCTION PROJECT

ANALYSIS OF UNIT RATES FOR ELECTRIC WORKS

SP801d (i) PVC insulated, PVC overall 600/1000V grade multi-core copper conductor with conductivity not less than 99.9% laid in PVC pipe, but 4-core 25mm^2

No.	Description	Specification	Quantity	Unit	Local Cost (Rs)		Foreign Cost (US$)		Remarks
					Rate	Amount	Rate	Amount	
1	PVC /PVC overall 600/1000V grade multi-core copper conductor with conductivity not less than 99.9% laid in PVC pipe, but 4-core	As per Specfication	1.00	m	1,180.00	1,180.00			
2	Transportation and handling Charges 1%		1.00	m	11.80	11.80			
3	Cable Laying & Fixing		1.00	m	60.00	60.00			
4	Supplier Over Head & Profit 10%		1.00	m	118.00	118.00			
	Net cost					1,369.80			
	Site oncost & overhead, profit	25.00%				342.45			
	Total					1,712.25			

Note:

WEST BANK BYPASS CONSTRUCTION PROJECT

ANALYSIS OF UNIT RATES FOR ELECTRIC WORKS

SP801d (ii) PVC insulated, PVC overall 600/1000V grade multi-core copper conductor with conductivity not less than 99.9% laid in PVC pipe, but 4-core 16mm^2

No.	Description	Specification	Quantity	Unit	Local Cost (Rs)		Foreign Cost (US$)		Remarks
					Rate	Amount	Rate	Amount	
1	PVC insulated, PVC overall 600/1000V grade multi-core copper conductor with conductivity not less than 99.9% laid in PVC pipe, but 4-core 16mm2	As per Specfication	1.00	m	625.00	625.00			
2	Transportation and handling Charges 1%		1.00	m	6.25	6.25			
3	Cable Laying & Fixing		1.00	m	50.00	50.00			
4	Supplier Over Head & Profit 10%		1.00	m	62.50	62.50			
	Net cost					743.75			
	Site oncost & overhead, profit	25.00%				185.94			
	Total					929.69			

Note:

WEST BANK BYPASS CONSTRUCTION PROJECT

ANALYSIS OF UNIT RATES FOR ELECTRIC WORKS

SP801d (iii) PVC insulated, PVC overall 600/1000V grade multi-core copper conductor with conductivity not less than 99.9% laid in PVC pipe, but 4-core 10mm^2

No.	Description	Specification	Quantity	Unit	Local Cost (Rs)		Foreign Cost (US$)		Remarks
					Rate	Amount	Rate	Amount	
1	PVC insulated, PVC overall 600/1000V grade multi-core copper conductor with conductivity not less than 99.9% laid in PVC pipe, but 4-core 10mm2	As per Specfication	1.00	m	394.00	394.00			
2	Transportation and handling Charges 1%		1.00	m	3.94	3.94			
3	Cable Laying & Fixing		1.00	m	40.00	40.00			
4	Supplier Over Head & Profit 10%		1.00	m	39.40	39.40			
	Net cost					477.34			
	Site oncost & overhead, profit	25.00%				119.34			
	Total					596.68			

Note:

WEST BANK BYPASS CONSTRUCTION PROJECT

ANALYSIS OF UNIT RATES FOR ELECTRIC WORKS

SP801d (iv) PVC insulated, PVC overall 600/1000V grade multi-core copper conductor with conductivity not less than 99.9% laid in PVC pipe, but 4-core 2.5mm^2

No.	Description	Specification	Quantity	Unit	Local Cost (Rs)		Foreign Cost (US$)		Remarks
					Rate	Amount	Rate	Amount	
1	PVC insulated, PVC overall 600/1000V grade multi-core copper conductor with conductivity not less than 99.9% laid in PVC pipe, but 4-core 2.5mm2	As per Specfication	1.00	m	112.00	112.00			
2	Transportation and handling Charges 1%		1.00	m	1.12	1.12			
3	Cable Laying & Fixing 1		1.00	m	40.00	40.00			
4	Supplier Over Head & Profit 10%		1.00	m	11.20	11.20			
	Net cost					164.32			
	Site oncost & overhead, profit	25.00%				41.08			
	Total					205.40			

Note:

WEST BANK BYPASS CONSTRUCTION PROJECT

ANALYSIS OF UNIT RATES FOR ELECTRIC WORKS

SP801e (j) 3-core 2.5mm^2 PVC/PVC insulated 600/1000V grade copper multi-core cable from junction box to the light fitting through the hollow of pole

No.	Description	Specification	Quantity	Unit	Local Cost (Rs)		Foreign Cost (US$)		Remarks
					Rate	Amount	Rate	Amount	
1	3-core 2.5mm2 PVC/PVC insulated 600/1000V grade copper multi-core cable from junction box to the light fitting through the hollow of pole	As per Specfication	1.00	m	96.00	96.00			
2	Transportation and handling Charges 2%		1.00	m	1.92	1.92			
3	Cable Laying & Fixing		1.00	m	50.00	50.00			
4	Supplier Over Head & Profit 10%		1.00	m	9.60	9.60			
	Net cost					157.52			
	Site oncost & overhead, profit	25.00%				39.38			
	Total					196.90			

Note:

WEST BANK BYPASS CONSTRUCTION PROJECT

ANALYSIS OF UNIT RATES FOR ELECTRIC WORKS

SP801f Road lighting control panel

No.	Description	Specification	Quantity	Unit	Local Cost (Rs)		Foreign Cost (US$)		Remarks
					Rate	Amount	Rate	Amount	
1	Road lighting control panel -imported	As per Specfication	1.00	No.	55,000.00	55,000.00			
2	Transportation and handling Charges 2.5%		1.00	No.	1,375.00	1,375.00			
3	Fixing & Installation with Fixing Material		1.00	No.	7,570.00	7,570.00			
4	Supplier Over Head & Profit 10%		1.00	No.	5,500.00	5,500.00			
	Net cost					69,445.00			
	Site oncost & overhead, profit	25.00%				17,361.25			
	Total					86,806.25			

Note:

WEST BANK BYPASS CONSTRUCTION PROJECT

ANALYSIS OF UNIT RATES FOR ELECTRIC WORKS

SP801g (i) 2x10mm^2 bare copper wires as earth continuity conductors from earth points to lighting control poles(a)

No.	Description	Specification	Quantity	Unit	Local Cost (Rs)		Foreign Cost (US$)		Remarks
					Rate	Amount	Rate	Amount	
1	2x10mm2 bare copper wires as earth continuity conductors from earth points to lighting control panels (a)	As per Specfication	1.00	m	255.00	255.00			
2	Transportation and handling Charges 5%		1.00	m	12.50	12.50			
3	Laying Fixing with Fixing Material		1.00	m	148.00	148.00			
4	Supplier Over Head & Profit 10%		1.00	m	25.00	25.00			
	Net cost					440.50			
	Site oncost & overhead, profit	25.00%				110.13			
	Total					550.63			

Note:

WEST BANK BYPASS CONSTRUCTION PROJECT

ANALYSIS OF UNIT RATES FOR ELECTRIC WORKS

SP801g (ii) **2x16mm^2 bare copper wires as earth continuity conductors from earth points to lighting control poles**

No.	Description	Specification	Quantity	Unit	Local Cost (Rs)		Foreign Cost (US$)		Remarks
					Rate	Amount	Rate	Amount	
1	2x16mm2 bare copper wires as earth continuity conductors from earth points to lighting control poles(b)	As per Specfication	1.00	m	382.00	382.00			
2	Transportation and handling Charges 5%		1.00	m	19.00	19.00			
3	Laying Fixing with Fixing Material		1.00	m	148.00	148.00			
4	Supplier Over Head & Profit 10%		1.00	m	38.00	38.00			
	Net cost					587.00			
	Site oncost & overhead, profit	25.00%				146.75			
	Total					733.75			

Note:

WEST BANK BYPASS CONSTRUCTION PROJECT

ANALYSIS OF UNIT RATES FOR ELECTRIC WORKS

SP801g (iii) **Earth System comprising of 16mm dia.copper coated M.S. rods driven in ground for road lighting & Traffic signals control panel & poles with resistance of less than 2 ohms.**

No.	Description	Specification	Quantity	Unit	Local Cost (Rs)		Foreign Cost (US$)		Remarks
					Rate	Amount	Rate	Amount	
1	Earth System comprising of 16mm dia.copper coated M.S. rods driven in ground for road lighting & Traffic signals control panel & poles with resistance of less than 2 ohms.	As per Specfication	1.00	No.	9,700.00	9,700.00			
2	Transportation and handling Charges 20%		1.00	No.	1,940.00	1,940.00			
3	Installation & Fixing Including Civil works & Fixture for Earth System		1.00	No.	29,327.00	29,327.00			
4	Supplier Over Head & Profit 10%		1.00	No.	970.00	970.00			
	Net cost					41,937.00			
	Site oncost & overhead, profit	25.00%				10,484.25			
	Total					52,421.25			

Note:

WEST BANK BYPASS CONSTRUCTION PROJECT

ANALYSIS OF UNIT RATES FOR ELECTRIC WORKS

SP801h (i) **PVC insulated,Earth Conecting Conductor 1-core 16mm2**

No.	Description	Specification	Quantity	Unit	Local Cost (Rs)		Foreign Cost (US$)		Remarks
					Rate	Amount	Rate	Amount	
1	PVC insulated,Earth Conecting Conductor 1-core 16mm2	As per Specfication	1.00	m	135.00	135.00			
2	Transportation and handling Charges 2%		1.00	m	2.70	2.70			
3	Cable Laying & Fixing		1.00	m	50.00	50.00			
4	Supplier Over Head & Profit 10%		1.00	m	13.50	13.50			
	Net cost					201.20			
	Site oncost & overhead, profit	25.00%				50.30			
	Total					251.50			

Note:

WEST BANK BYPASS CONSTRUCTION PROJECT

ANALYSIS OF UNIT RATES FOR ELECTRIC WORKS

SP801h (ii) **PVC insulated,Earth Conecting Conductor 1-core 10mm2**

No.	Description	Specification	Quantity	Unit	Local Cost (Rs)		Foreign Cost (US$)		Remarks
					Rate	Amount	Rate	Amount	
1	PVC insulated,Earth Conecting Conductor 1-core 10mm2	As per Specfication	1.00	m	92.00	92.00			
2	Transportation and handling Charges 2%		1.00	m	1.84	1.84			
3	Cable Laying & Fixing		1.00	m	40.00	40.00			
4	Supplier Over Head & Profit 10%		1.00	m	9.20	9.20			
	Net cost					143.04			
	Site oncost & overhead, profit	25.00%				35.76			
	Total					178.80			

Note:

WEST BANK BYPASS CONSTRUCTION PROJECT

ANALYSIS OF UNIT RATES FOR ELECTRIC WORKS

SP801h (iii) **PVC insulated,Earth Conecting Conductor 1-core 4mm^2**

No.	Description	Specification	Quantity	Unit	Local Cost (Rs)		Foreign Cost (US$)		Remarks
					Rate	Amount	Rate	Amount	
1	PVC insulated,Earth Conecting Conductor 1-core 4mm2	As per Specfication	1.00	m	39.00	39.00			
2	Transportation and handling Charges 2%		1.00	m	0.78	0.78			
3	Cable Laying & Fixing		1.00	m	35.00	35.00			
4	Supplier Over Head & Profit 10%		1.00	m	3.90	3.90			
	Net cost					78.68			
	Site oncost & overhead, profit	25.00%				19.67			
	Total					98.35			

Note:

WEST BANK BYPASS CONSTRUCTION PROJECT

ANALYSIS OF UNIT RATES FOR ELECTRIC WORKS

SP801i Energy Meters 5 kiloo watts for Intersection 4, Including Fee and Charges of AJK Electricity Department

No.	Description	Specification	Quantity	Unit	Local Cost (Rs)		Foreign Cost (US$)		Remarks
					Rate	Amount	Rate	Amount	
1	Energy Meters 5 Kiloo watts for Intersection 4 including Fee and Charges of AJK Electricity Department	As per Specfication	1.00	Job	22,000.00	22,000.00			
2	Transportation and handling Charges 5%		1.00	Job	1,100.00	1,100.00			
3	Labour Charges 5% Installation Testing & commissioning		1.00	Job	2,000.00	2,000.00			
4	Supplier Over Head & Profit 10%		1.00	Job	2,200.00	2,200.00			
	Net cost					27,300.00			
	Site oncost & overhead, profit	25.00%				6,825.00			
	Total					34,125.00			

Note:

WEST BANK BYPASS CONSTRUCTION PROJECT

ANALYSIS OF UNIT RATES FOR ELECTRIC WORKS

SP801j **25kVA, 11/0.415 kV pole mounted transformer complete with pole, earthing, 3-phase energy meter and all accessories as per AJK Electricity Department source.**

No.	Description	Specification	Quantity	Unit	Local Cost (Rs)		Foreign Cost (US$)		Remarks
					Rate	Amount	Rate	Amount	
1	25kVA, 11/0.415 kV pole mounted transformer complete with pole, earthing, 3-phase energy meter and all accessories as per AJK Electricity Department source. including Fee and Charges of AJK Electricity Department	As per Specfication	1.00	Job	352,233.00	352,233.00			
2	Transportation and handling Charges 5%		1.00	Job	17,611.00	17,611.00			
3	Labour Charges 5% Installation Testing & commissioning		1.00	Job	17,611.65	17,611.65			
4	Supplier Over Head & Profit 10%		1.00	Job	35,223.00	35,223.00			
	Net cost					422,678.65			
	Site oncost & overhead, profit	25.00%				105,669.66			
	Total					528,348.31			

Note:

WEST BANK BYPASS CONSTRUCTION PROJECT

ANALYSIS OF UNIT RATES FOR ELECTRIC WORKS

SP801 j Energy Meters 5 kiloo watts for Intersection 4, Including Fee and Charges of AJK Electricity Department

No.	Description	Specification	Quantity	Unit	Local Cost (Rs)		Foreign Cost (US$)		Remarks
					Rate	Amount	Rate	Amount	
1	Energy Meters 5 Kiloo watts for Intersection 4 including Fee and Charges of AJK Electricity Department	As per Specfication	1.00	Job	22,000.00	22,000.00			
2	Transportation and handling Charges 5%		1.00	Job	1,100.00	1,100.00			
3	Labour Charges 5% Installation Testing & commissioning		1.00	Job	2,000.00	2,000.00			
4	Supplier Over Head & Profit 10%		1.00	Job	2,200.00	2,200.00			
	Net cost					27,300.00			
	Site oncost & overhead, profit	25.00%				6,825.00			
	Total					34,125.00			

Note:

WEST BANK BYPASS CONSTRUCTION PROJECT

ANALYSIS OF UNIT RATES FOR ELECTRIC WORKS

SP802a (i) **Traffic lights Pole with 7 m long arm**

No.	Description	Specification	Quantity	Unit	Local Cost (Rs)		Foreign Cost (US$)		Remarks
					Rate	Amount	Rate	Amount	
1	Traffic lights Pole with 7 m long arm	As per Specfication	1.00	No.	49,760.00	49,760.00			
2	3Way Assembly Including L.E.D Lights Complete in All Respect-Imported		2.00	No.	88,935.00	177,870.00			
3	1 Way Assembly Including L.E.D Lights Complete in All Respect Imported		1.00	No.	31,700.00	31,700.00			
4	1 Way Assembly Including L.E.D Lights Count Down Timer Complete in All Respect-Imported		1.00	No.	31,700.00	31,700.00			
5	Transportation and handling Charges 2%		1.00	No.	4,041.90	4,041.90			
6	Pole Foundation Complete		1.00	No.	74,185.00	74,185.00			
7	Fixing & Erection including Labour, Equipment & Fixing Material		1.00	No.	10,104.75	10,104.75			
8	Supplier Over Head & Profit 10%		1.00	No.	20,209.50	20,209.50			
	Net cost					399,571.15			
	Site oncost & overhead, profit	25.00%				99,892.79			
	Total					499,463.94			

Note:

WEST BANK BYPASS CONSTRUCTION PROJECT

ANALYSIS OF UNIT RATES FOR ELECTRIC WORKS

SP802a (ii) **Traffic lights pole 3.4m height**

No.	Description	Specification	Quantity	Unit	Local Cost (Rs)		Foreign Cost (US$)		Remarks
					Rate	Amount	Rate	Amount	
1	Traffic lights with 3.4m long arm	As per Specfication	1.00	No.	19,650.00	19,650.00			
1	3Way Assembly Including L.E.D Lights Complete in All Respect-imported		1.00	No.	88,935.00	88,935.00			
2	1 Way Assembly Including L.E.D Lights Complete in All Respect-imported		1.00	No.	31,700.00	31,700.00			
3	Transportation and handling Charges 2%		1.00	No.	2,805.70	2,805.70			
4	Pole Foundation Complete		1.00	No.	20,460.00	20,460.00			
5	Fixing & Erection including Labour, Equipment & Fixing Material		1.00	No.	7,014.25	7,014.25			
6	Supplier Over Head & Profit 10%		1.00	No.	14,028.50	14,028.50			
	Net cost					184,593.45			
	Site oncost & overhead, profit	25.00%				46,148.36			
	Total					230,741.81			

Note:

WEST BANK BYPASS CONSTRUCTION PROJECT

ANALYSIS OF UNIT RATES FOR ELECTRIC WORKS

SP802b Traffic light control panel Imported (16 Input & Outputs) S.7 Siemens or Equivalent Europe Origin with Expansion Module, Power Supply & Accessories

No.	Description	Specification	Quantity	Unit	Local Cost (Rs)		Foreign Cost (US$)		Remarks
					Rate	Amount	Rate	Amount	
1	Traffic light control panel Imported (16 Input & Outputs) S.7 Siemens or Equivalent Europe Origin with Expansion Module, Power Supply & Accessories	As per Specfication	1.00	No.	187,450.00	187,450.00			
2	Transportation and handling Charges 1%		1.00	No.	1,874.50	1,874.50			
3	Foundation Complete		1.00	No.	4,345.00	4,345.00			
4	Fixing & Erection including Labour, Equipment & Fixing Material		1.00	No.	9,725.00	9,725.00			
5	Supplier Over Head & Profit 10%		1.00	No.	18,745.00	18,745.00			
	Net cost					222,139.50			
	Site oncost & overhead, profit	25.00%				55,534.88			
	Total					277,674.38			

Note:

WEST BANK BYPASS CONSTRUCTION PROJECT

ANALYSIS OF UNIT RATES FOR ELECTRIC WORKS

SP802c Main Distrbution Box

No.	Description	Specification	Quantity	Unit	Local Cost (Rs)		Foreign Cost (US$)		Remarks
					Rate	Amount	Rate	Amount	
1	Main Distrbution Box	As per Specfication	1.00	No.	59,000.00	59,000.00			
2	Foundation, & Fixing with all accessories		1.00	No.	6,780.00	6,780.00			
3	Transportation and handling Charges 2%		1.00	No.	1,180.00	1,180.00			
4	Supplier Over Head & Profit 10%		1.00	No.	5,900.00	5,900.00			
	Net cost					72,860.00			
	Site oncost & overhead, profit	25.00%				18,215.00			
	Total					91,075.00			

Note:

WEST BANK BYPASS CONSTRUCTION PROJECT

ANALYSIS OF UNIT RATES FOR ELECTRIC WORKS

SP802d Main Hole/Hand Hole as per Drawing or as per Instruction of Engineer

No.	Description	Specification	Quantity	Unit	Local Cost (Rs)		Foreign Cost (US$)		Remarks
					Rate	Amount	Rate	Amount	
1	Main Hole/Hand Hole	As per Specfication	1.00	No	17,340.00	17,340.00			
	Net cost					17,340.00			
	Site oncost & overhead, profit	25.00%				4,335.00			
	Total					21,675.00			

Note:

WEST BANK BYPASS CONSTRUCTION PROJECT

ANALYSIS OF UNIT RATES FOR ELECTRIC WORKS

SP802e Field Testing

No.	Description	Specification	Quantity	Unit	Local Cost (Rs)		Foreign Cost (US$)		Remarks
					Rate	Amount	Rate	Amount	
1	Review-Field Testing Fault Fixing	As per Specfication	1.00	Job	50,000.00	50,000.00			
2	Start up and Commissioning		1.00	Job	25,099.00	25,099.00			
	Net cost					75,099.00			
	Site oncost & overhead, profit	25.00%				18,774.75			
	Total					93,873.75			

Note:

APPENDIX H-6

ANALYSIS OF UNIT RATES FOR DAYWORK

(1) PACKAGE I

WEST BANK BYPASS CONSTRUCTION PROJECT (PACKAGE I)

ANALYSIS OF UNIT RATES FOR DAYWORKS

Daywork (Labour)

No.	Description	Specification	Quantity	Unit	Local Cost (Rs)		Foreign Cost (US$)		Remarks
					Rate	Amount	Rate	Amount	
1	Foreman		500	hr	321.12	160,557.98			
2	Electrician		500	hr	182.53	91,264.54			
3	Mechanic		500	hr	182.53	91,264.54			
4	Carpenter		500	hr	182.53	91,264.54			
5	Mason		500	hr	182.53	91,264.54			
6	Welder		500	hr	182.53	91,264.54			
7	Steel fixer		500	hr	182.53	91,264.54			
8	Driver		500	hr	152.11	76,053.78			
9	Labour		500	hr	125.07	62,533			
10	Skilled labour		500	hr	133.52	66,758.32			
	Net cost					913,490.42			

Note: Site oncost + overhead = 35.9 %

WEST BANK BYPASS CONSTRUCTION PROJECT (PACKAGE I)

ANALYSIS OF UNIT RATES FOR DAYWORKS

Daywork (Material)

No.	Description	Specification	Quantity	Unit	Local Cost (Rs)		Foreign Cost (US$)		Remarks
					Rate	Amount	Rate	Amount	
1	Ordinary portland cement, 50kg bag		100	t	8,178.88	817,888.00			
2	High yield strength reinforcement, 10 - 32mm		30	t	68,112.64	2,043,379.20			
3	High yield strength reinforcement, 10			t	64,090.24	0.00			
4	Sand for concrete		200	m^3	1,421.25	284,249.60			
5	Coarse aggregate for concrete		500	m^3	1,748.40	874,201.60			
6	Gabion box, 1.0x1.0x2.0m		500	nr	2,598.47	1,299,235.20			
7	Plywood, 1.2x1.8x12mm		500	nr	1,340.80	670,400.00			
8	Rough sawn timber, 75×50×4000		500	nr	413.41	206,706.67			
9	Diese fuel		200	litre	51.02	10,203.49			
10	Petrol		200	litre	53.63	10,726.40			
11	Class II RC pipe 610mm, L=2.4m		500	nr	4,692.80	2,346,400.00			
12	Stone for Gabion box		200	m^3	6,636.96	1,327,392.00			
13	Sand bag		500	nr	26.82	13,408.00			
14	Electrode		500	kg	134.08	67,040.00			
	Net cost					9,971,230.15			

Note: Site oncost + overhead = 35.9 %

WEST BANK BYPASS CONSTRUCTION PROJECT (PACKAGE I)

ANALYSIS OF UNIT RATES FOR DAYWORKS

Daywork (Equipment)

No.	Description	Specification	Quantity	Unit	Local Cost (Rs)		Foreign Cost (US$)		Remarks
					Rate	Amount	Rate	Amount	
1	Compressor including hammers etc. over 1.7 cu.m/min. upto 5.0 cu.m/min.		500	hr	1,854.87	927,436.54			
2	Pneumatic tyred roller, 10-12t		500	hr	2,177.14	1,088,571.81			
3	Vibratory roller, 8-10t		500	hr	2,568.87	1,284,436.41			
4	Motor grader, 100 hp		500	hr	2,947.17	1,473,586.93			
5	Bull dozer, 15t		500	hr	3,441.42	1,720,707.98			
6	Water bowser, 6000 litre		500	hr	976.64	488,317.76			
7	Dump truck, 10t		500	hr	1,603.23	801,616.56			
8	Flat type truck, 10 t		500	hr	2,112.33	1,056,162.82			
9	4t truck with crane, 4t		500	hr	1,202.37	601,183.95			
10	Hand vibratory roller, 0.8-1.1t		500	hr	223.59	111,796.07			
11	Wheel loader, 1.8 - 2.1m^3		500	hr	3,030.54	1,515,269.47			
12	Excavator, 0.45 - 0.6m^3		500	hr	2,796.75	1,398,377.14			
13	Rough terrain crane, 35t		500	hr	4,182.59	2,091,292.78			
14	Poker vibrator, 48 mm		500	hr	51.45	25,725.26			
15	Welding machine		500	hr	39.49	19,744.96			
16	Generator, 45kW		500	hr	1,192.41	596,202.85			
17	Oxy-acetylene cutting torch up to 13mm thickness		500	hr	147.88	73,941.18			
18	Static concrete mixer,		500	hr	619.21	309,604.67			
19	Excavator, 0.2m^3, wheel type		500	hr	1,879.38	939,691.47			
	Net cost					16,523,666.60			

Note: Site oncost + overhead = 35.9 %

(2) PACKAGE II

WEST BANK BYPASS CONSTRUCTION PROJECT (PACKAGE II)

ANALYSIS OF UNIT RATES FOR DAY WORKS

Daywork (Labour)

No.	Description	Specification	Quantity	Unit	Local Cost (Rs)		Foreign Cost (US$)		Remarks
					Rate	Amount	Rate	Amount	
1	Foreman		250	hr	299.37	74,842.44			
2	Electrician		250	hr	170.17	42,542.02			
3	Mechanic		250	hr	170.17	42,542.02			
4	Carpenter		250	hr	170.17	42,542.02			
5	Mason		250	hr	170.17	42,542.02			
6	Welder		250	hr	170.17	42,542.02			
7	Steel fixer		250	hr	170.17	42,542.02			
8	Driver		250	hr	141.81	35,451.68			
9	Labour		250	hr	116.60	29,149			
10	Skilled labour		250	hr	124.47	31,118.70			
	Net cost					425,814.08			

Note: Site oncost + overhead = 25%

WEST BANK BYPASS CONSTRUCTION PROJECT (PACKAGE II)

ANALYSIS OF UNIT RATES FOR DAY WORKS

Daywork (Material)

No.	Description	Specification	Quantity	Unit	Local Cost (Rs)		Foreign Cost (US$)		Remarks
					Rate	Amount	Rate	Amount	
1	Ordinary portland cement, 50kg bag		100	t	7,625.00	762,500.00			
2	High yield strength reinforcement, 10 - 32mm		30	t	63,500.00	1,905,000.00			
3	High yield strength reinforcement, 10		0	t	59,750.00	0.00			
4	Sand for concrete		100	m^3	1,325.00	132,500.00			
5	Coarse aggregate for concrete		250	m^3	1,630.00	407,500.00			
6	Gabion box, 1.0x1.0x2.0m		250	nr	2,422.50	605,625.00			
7	Plywood, 1.2x1.8x12mm		250	nr	1,250.00	312,500.00			
8	Rough sawn timber, 75×50×4000		250	nr	385.42	96,354.17			
9	Diese fuel		250	litre	47.56	11,890.63			
10	Petrol		250	litre	50.00	12,500.00			
11	Class II RC pipe 610mm, L=2.4m		200	nr	4,375.00	875,000.00			
12	Stone for Gabion box		250	m^3	6,187.50	1,546,875.00			
13	Sand bag		250	nr	25.00	6,250.00			
14	Electrode		250	kg	125.00	31,250.00			
	Net cost					6,705,744.79			

Note: Site oncost + overhead = 25%

WEST BANK BYPASS CONSTRUCTION PROJECT (PACKAGE II)

ANALYSIS OF UNIT RATES FOR DAY WORKS

Daywork (Equipment)

No.	Description	Specification	Quantity	Unit	Local Cost (Rs)		Foreign Cost (US$)		Remarks
					Rate	Amount	Rate	Amount	
1	Compressor including hammers etc. over 1.7 cu.m/min. upto 5.0 cu.m/min.		250	hr	1,729.26	432,314.91			
2	Pneumatic tyred roller, 10-12t		250	hr	2,029.71	507,426.45			
3	Vibratory roller, 8-10t		250	hr	2,394.91	598,726.70			
4	Motor grader, 100 hp		250	hr	2,747.59	686,897.25			
5	Bull dozer, 15t		250	hr	3,208.36	802,090.16			
6	Water bowser, 6000 litre		250	hr	910.50	227,624.25			
7	Dump truck, 10t		250	hr	1,494.66	373,665.24			
8	Flat type truck, 10 t		250	hr	1,969.28	492,319.33			
9	4t truck with crane, 4t		250	hr	1,120.94	280,235.66			
10	Hand vibratory roller, 0.8-1.1t		250	hr	208.45	52,112.58			
11	Wheel loader, 1.8 - 2.1m^3		250	hr	2,825.31	706,327.13			
12	Excavator, 0.45 - 0.6m^3		250	hr	2,607.36	651,838.99			
13	Rough terrain crane, 35t		250	hr	3,899.34	974,834.42			
14	Poker vibrator, 48 mm		250	hr	47.97	11,991.56			
15	Welding machine		250	hr	36.82	9,203.91			
16	Generator, 45kW		250	hr	1,111.66	277,913.77			
17	Oxy-acetylene cutting torch up to 13mm thickness		250	hr	137.87	34,466.91			
18	Static concrete mixer,		250	hr	577.28	144,319.00			
19	Excavator, 0.2m^3, wheel type		250	hr	1,752.11	438,027.42			
	Net cost					7,702,335.64			

Note: Site oncost + overhead = 25%