K02 OVERPASS BRIDGE

NO.8(OB8)-STA.9+415.000

COLOMBO OUTER CIRCULAR HIGHWAY PROJECT

OVERPASS BRIDGE NO. 8 - GENERAL VIEW (1)

(STA. 9+415.00)

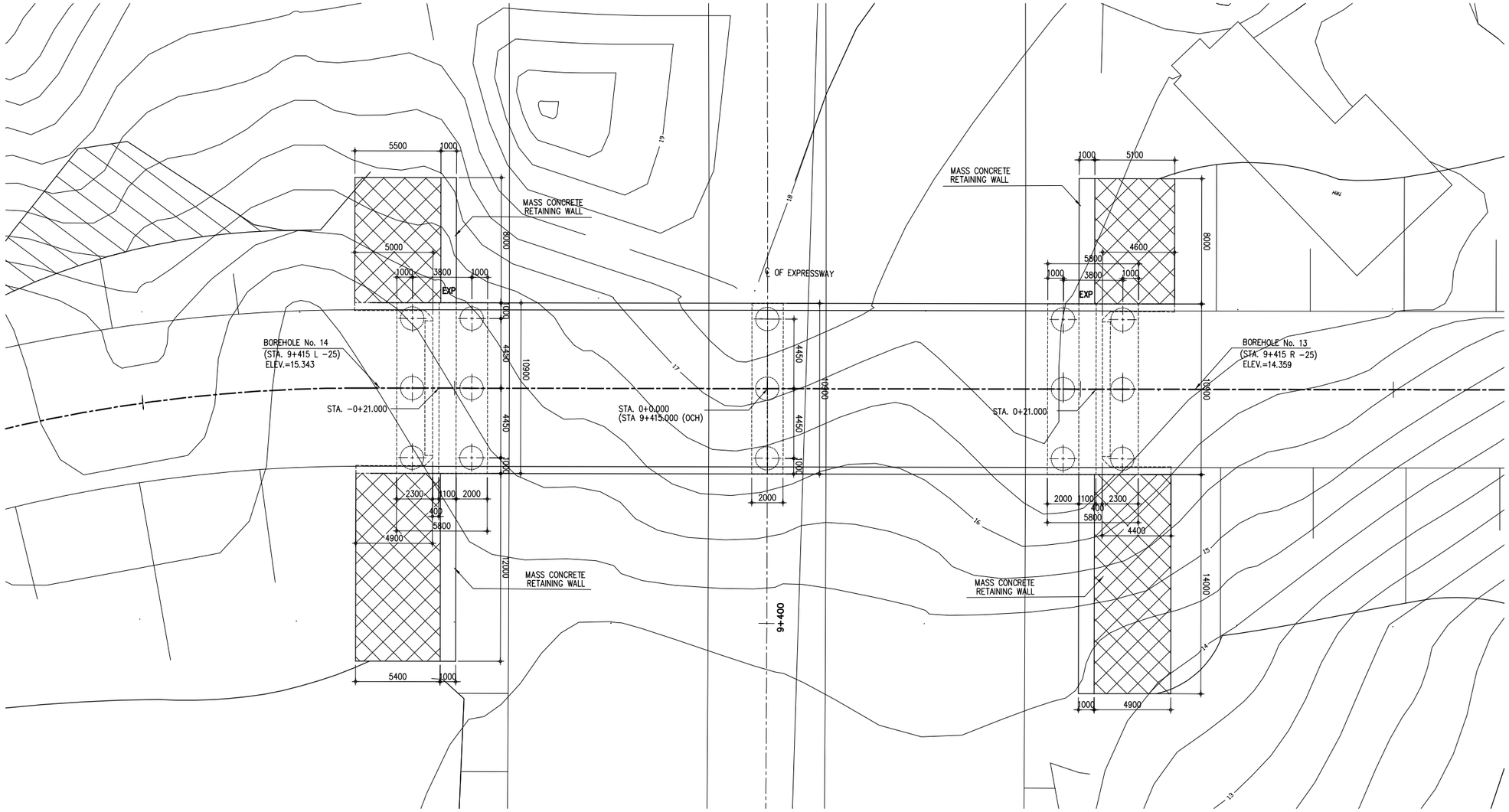

1 – PLAN
SCALE 1:150

THE DEMOCRATIC SOCIALIST REPUBLIC OF SRI LANKA MINISTRY OF HIGHWAYS & ROAD DEVELOPMENT **Road Development Authority**	JICA JAPAN INTERNATIONAL COOPERATION AGENCY ORICONSUL ORIENTAL CONSULTANTS COMPANY LIMITED in association with PACIFIC CONSULTANTS INTERNATIONAL	No / REVISION / DATE	COLOMBO OUTER CIRCULAR HIGHWAY PROJECT (NORTHERN SECTION 1) OVERPASS BRIDGE NO. 8 - GENERAL VIEW (1) STA. 9+415.00	DESIGNED BY: CHECKED BY: APPROVED BY: DWG. NO.	K02-00-A

OVERPASS BRIDGE NO. 8 - GENERAL VIEW (2)

(STA. 9+415.00)

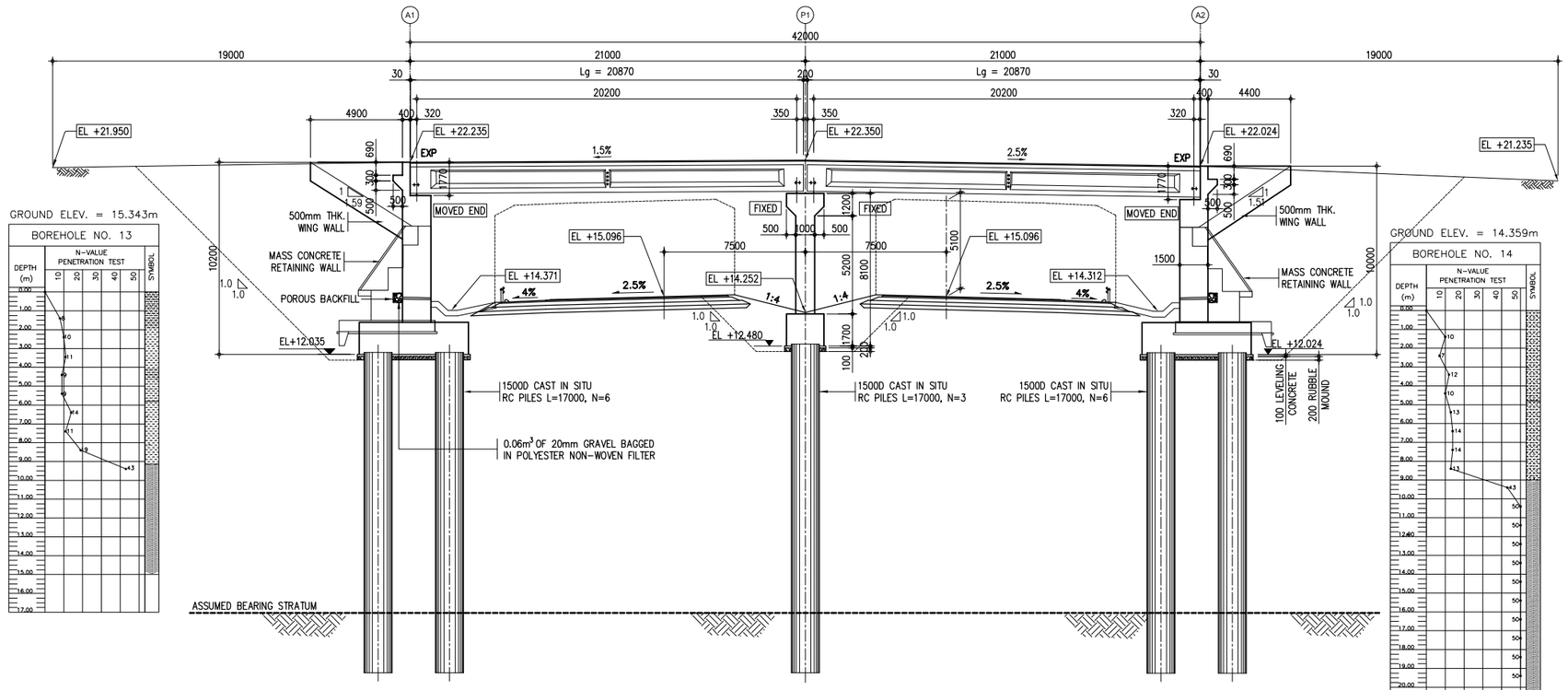

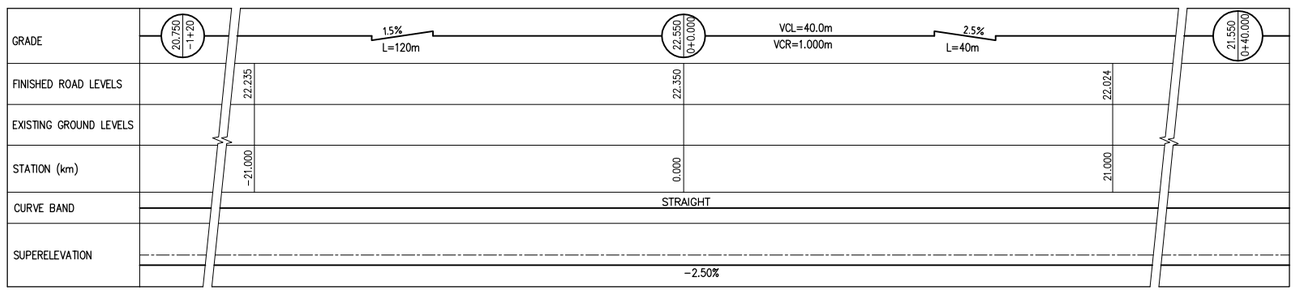

2 PROFILE
SCALE 1:150

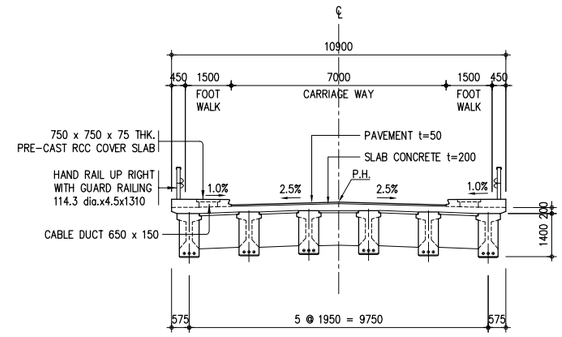

SUPERSTRUCTURE

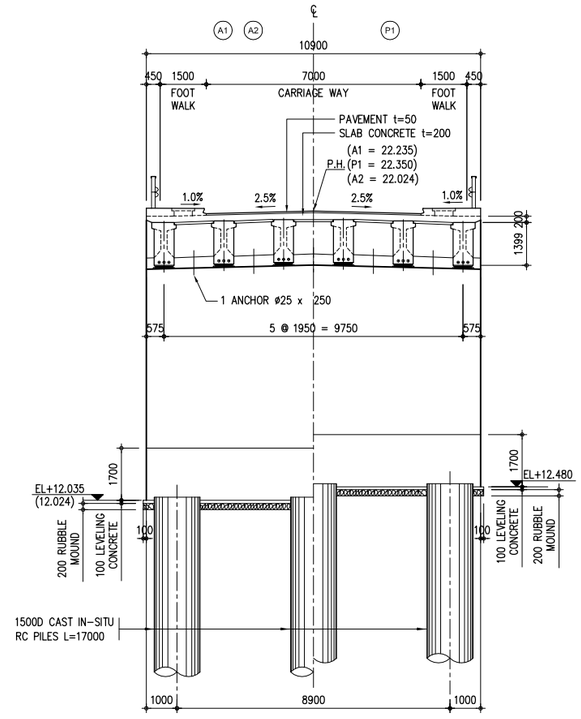

SUBSTRUCTURE

3 CROSS SECTION
SCALE 1:100

NOTES :

1. ALL DIMENSIONS ARE IN MILLIMETERS.
2. THIS DRAWING SHOULD BE READ IN CONJUNCTION WITH THE OTHER RELEVANT DRAWINGS.

THE DEMOCRATIC SOCIALIST REPUBLIC OF SRI LANKA MINISTRY OF HIGHWAYS & ROAD DEVELOPMENT **Road Development Authority**	JICA JAPAN INTERNATIONAL COOPERATION AGENCY ORICONSUL ORIENTAL CONSULTANTS COMPANY LIMITED in association with PACIFIC CONSULTANTS INTERNATIONAL	No	REVISION	DATE	COLOMBO OUTER CIRCULAR HIGHWAY PROJECT (NORTHERN SECTION 1) OVERPASS BRIDGE NO. 8 - GENERAL VIEW (2) STA. 9+415.00	DESIGNED BY: CHECKED BY: APPROVED BY: DWG. NO. K02-00-B

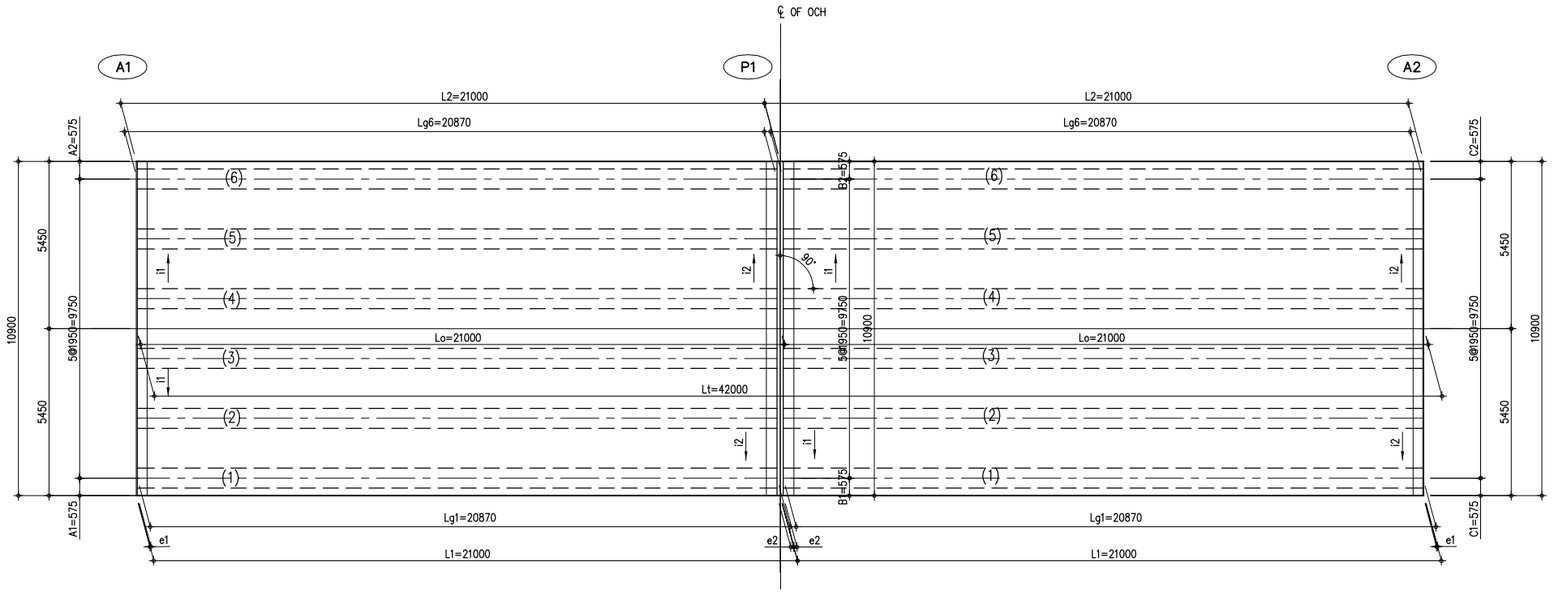

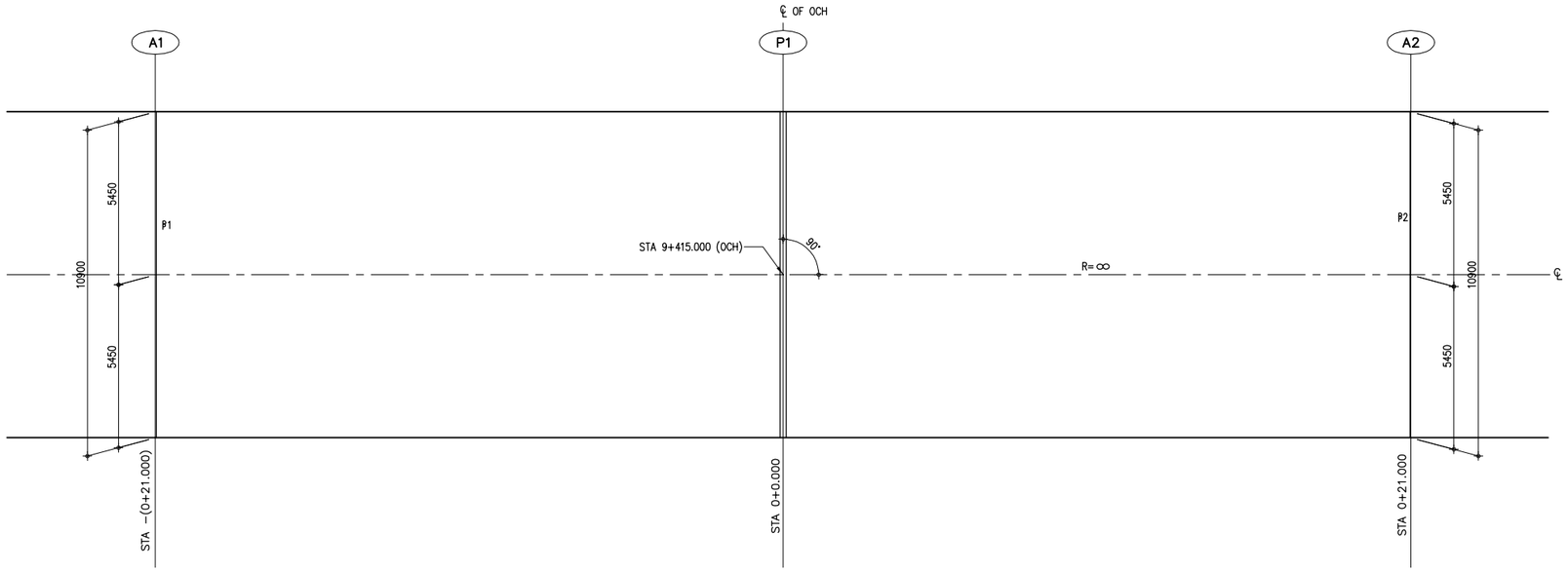

	2 SPAN CONTINUOUS BRIDGE
	A1~P1~A2
Lt (m)	42.000
Lo (m)	21.000
L1 (m)	21.000
L2 (m)	21.000
β1 (°)	0°00'00"
β2 (°)	0°00'00"
e1/e2 (mm)	30/100
i1 (%)	2.50
i2 (%)	2.50
A1/A2 (mm)	575/575
B1/B2 (mm)	575/575
C1/C2 (mm)	575/575
Lg1 (m)~Lg6 (m)	20.870
SPAN LENGTH (m)	L=2@21.0=42.0
REMARKS	

A — LAYOUT PLAN
SCALE 1:100

THE DEMOCRATIC SOCIALIST REPUBLIC OF SRI LANKA
MINISTRY OF HIGHWAYS & ROAD DEVELOPMENT
Road Development Authority

JICA JAPAN INTERNATIONAL COOPERATION AGENCY
ORIENTAL CONSULTANTS COMPANY LIMITED
in association with
PACIFIC CONSULTANTS INTERNATIONAL

No	REVISION	DATE

COLOMBO OUTER CIRCULAR HIGHWAY PROJECT
(NORTHERN SECTION 1)

OVERPASS BRIDGE NO. 8
LAYOUT PLAN

DESIGNED BY:
CHECKED BY:
APPROVED BY:
DWG. NO. K02-01

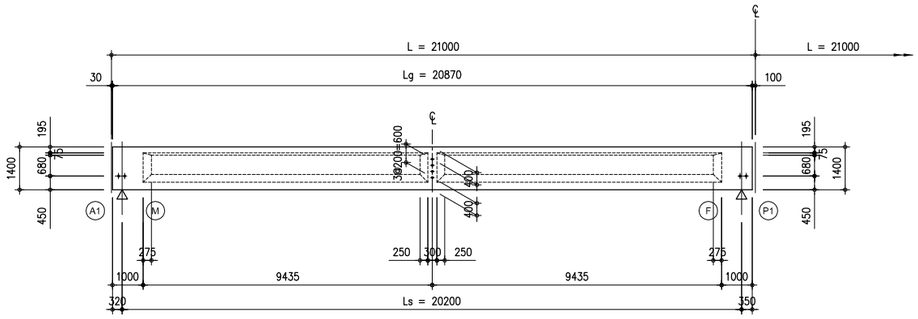

B — SIDE VIEW
SCALE 1:100

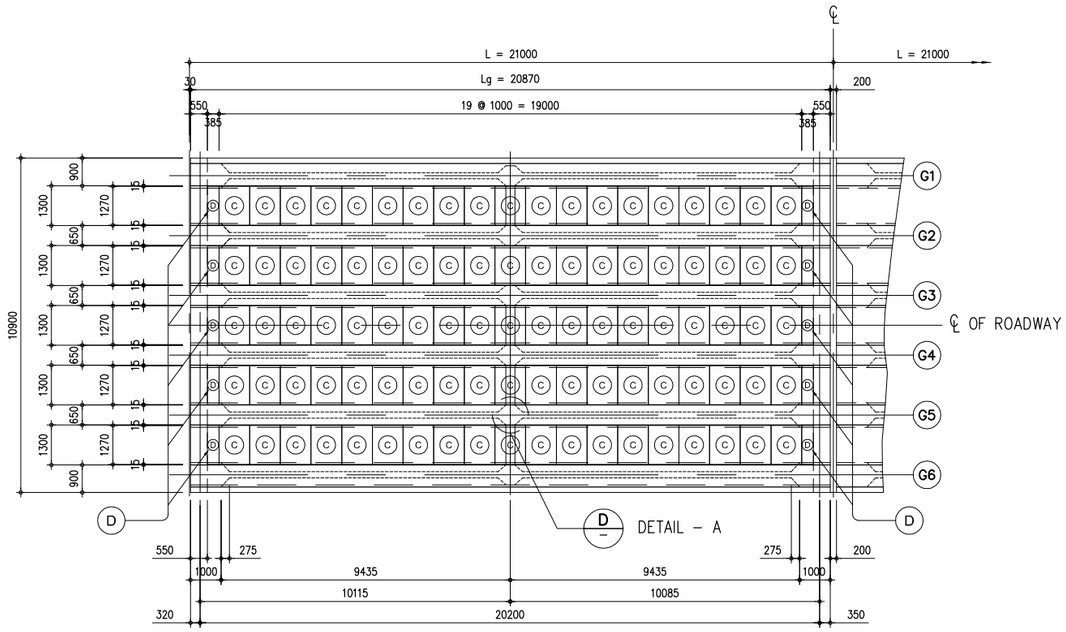

A — PLAN
SCALE 1:100

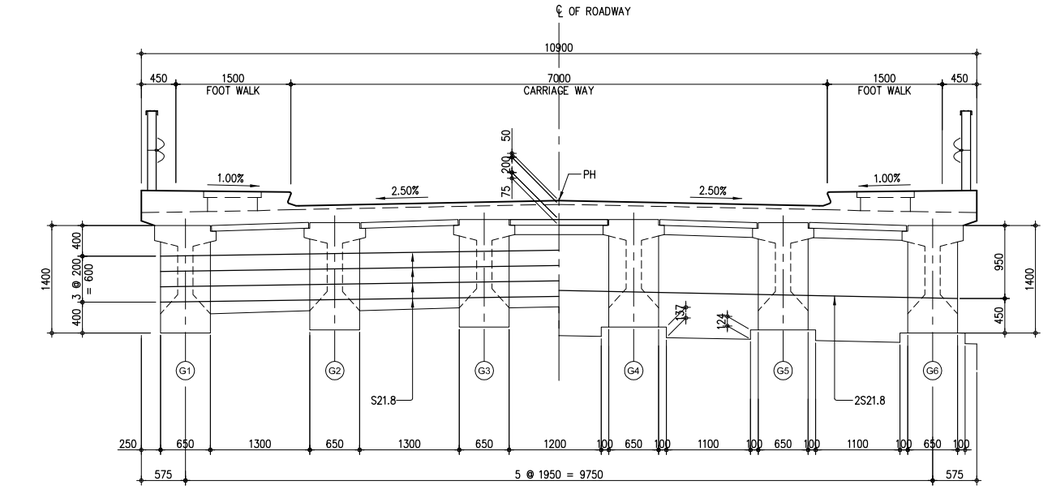

C — CROSS SECTION
SCALE 1:40

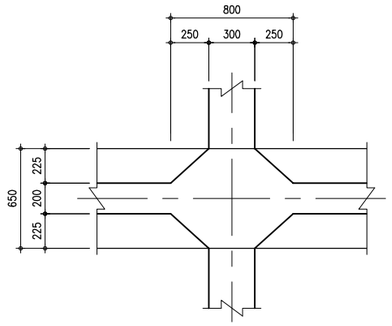

D — DETAIL-A
SCALE 1:20

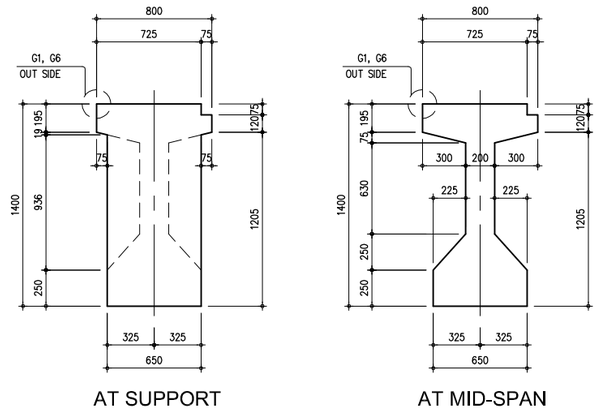

E — GIRDER CROSS SECTION
SCALE 1:20

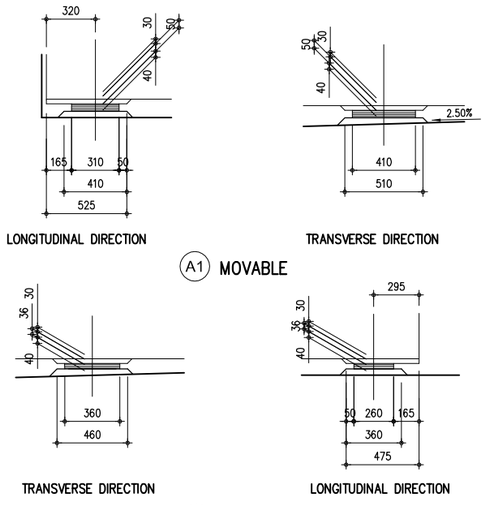

F — BEARING DETAILS
SCALE 1:20

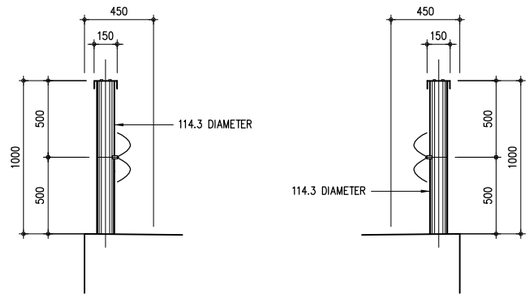

G — GUARDRAIL
SCALE 1:20

THE DEMOCRATIC SOCIALIST REPUBLIC OF SRI LANKA
MINISTRY OF HIGHWAYS & ROAD DEVELOPMENT
Road Development Authority

JICA JAPAN INTERNATIONAL COOPERATION AGENCY
ORICONSUL ORIENTAL CONSULTANTS COMPANY LIMITED
in association with
PACIFIC CONSULTANTS INTERNATIONAL

No	REVISION	DATE

COLOMBO OUTER CIRCULAR HIGHWAY PROJECT
(NORTHERN SECTION 1)

OVERPASS BRIDGE NO. 8
PCI - GIRDER LAYOUT AND DETAIL DIMENSION

DESIGNED BY:	
CHECKED BY:	
APPROVED BY:	
DWG. NO.	K02-02

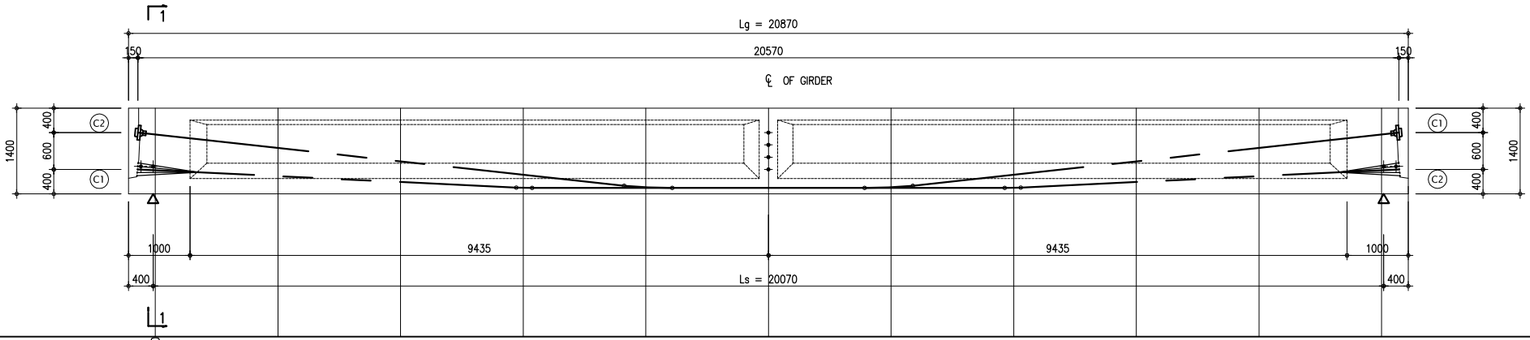

CABLE PROFILE (mm)	DISTANCE FROM ℄ (m)		-10.00	-8.00	-6.00	-4.00	-2.00	0.00	2.00	4.00	6.00	8.00	10.00		
	C1	DEAD END ▶	386	290	194	101	100	100	109	311	530	750	969	◀ JACKING END	C1
	C2	JACKING END ▶	969	750	530	311	109	100	100	101	194	290	386	◀ DEAD END	C2

A – PROFILE OF CABLES
SCALE 1:50

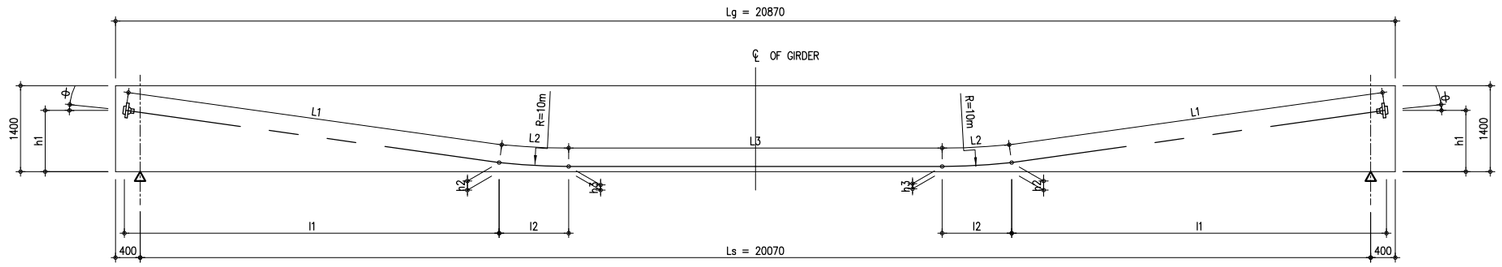

CABLE NO.	l1	l2	L1	L2	L3	$2\sum_1^2 L + 3$	h1	h2	h3	θ = (degree)
C1	7931	785	7978	785	3139	20665	1000	131	100	6° 15'
C2	6170	262	6177	262	7706	20584	400	103	100	2° 45'

TOTAL LENGTH $\sum l$ = 41.25 m
TOTAL WEIGHT W = 41.25 x 9.288 = 383.13 kg/1 girder

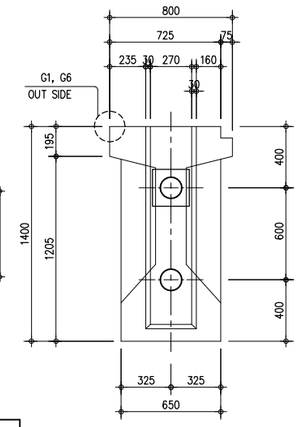

1 – 1

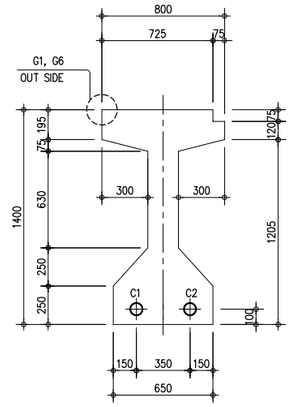

SECTION @ MIDSPAN

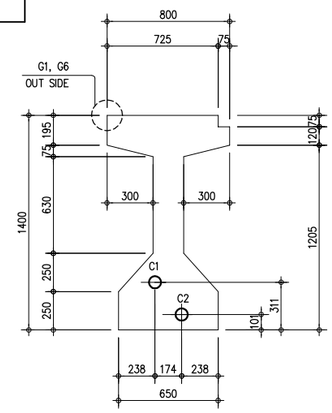

SECTION @ 4.00m

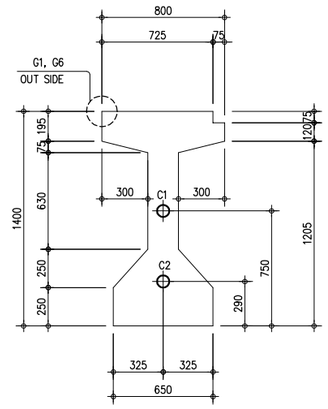

SECTION @ 8.00m

C – GIRDER CROSS SECTION
SCALE 1:20

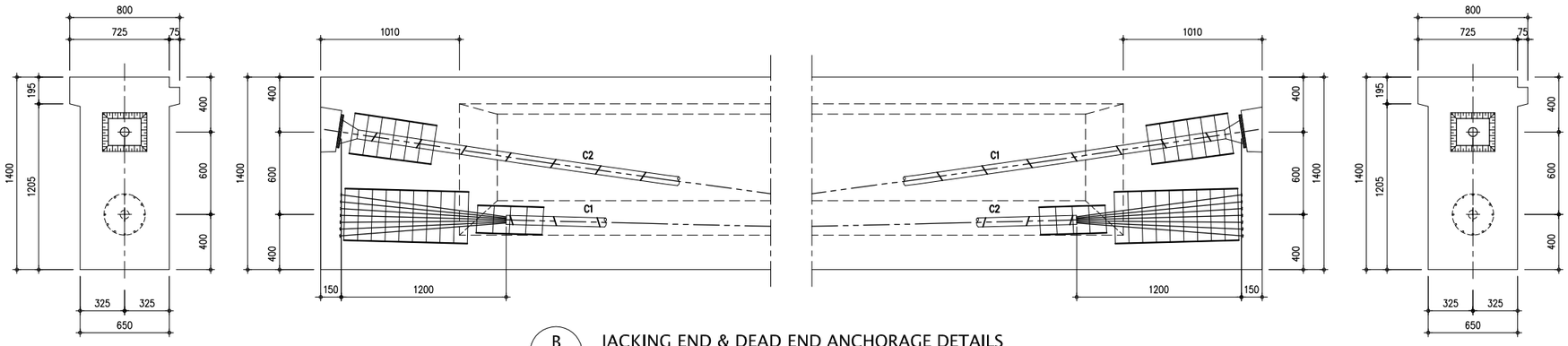

B – JACKING END & DEAD END ANCHORAGE DETAILS
SCALE 1:20

NOTES:

1. **PRESTRESSED CONCRETE:**
   - CONCRETE CUBE STRENGTH, fcu = 50 MPa
   - AT TRANSFER OF PRESTRESS, fci = 36 MPa
2. **PRESTRESSING STRANDS:**
   - 1 – D12.7 IS A 7 – WIRE STRAND WITH NOMINAL TENSILE STRENGTH, fpu = 1860 MPa
   - TOTAL NO. OF STRANDS = 2x12D12.7 = 24–D12.7
   - JACKING STRESS, fpo = 1302 MPa
   - TOTAL JACKING FORCE, Po = 2268 KN
   - CABLE DUCT INSIDE DIAMETER (12–D12.7) = 65mm.
3. **REINFORCING STEEL :**
   - ALL REINFORCING STEEL SHALL BE GRADE 460 WITH MINIMUM CHARACTERISTC STRENGTH, fy = 460 MPa
4. GIRDER PRE–CAMBER PRIOR TO STRESSING SHALL BE AS SHOWN BELOW

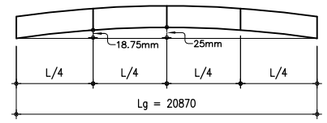

5. ALL DIMENSIONS ARE IN MILLIMETERS UNLESS OTHERWISE SPECIFIED.

THE DEMOCRATIC SOCIALIST REPUBLIC OF SRI LANKA
MINISTRY OF HIGHWAYS & ROAD DEVELOPMENT
Road Development Authority

JAPAN INTERNATIONAL COOPERATION AGENCY
ORIENTAL CONSULTANTS COMPANY LIMITED
in association with
PACIFIC CONSULTANTS INTERNATIONAL

No	REVISION	DATE

COLOMBO OUTER CIRCULAR HIGHWAY PROJECT
(NORTHERN SECTION 1)

OVERPASS BRIDGE NO. 8
PROFILES OF CABLES, JACKING END & DEAD END ANCHORAGE DETAILS AND GIRDER CROSS SECTION

DESIGNED BY:	
CHECKED BY:	
APPROVED BY:	
DWG. NO.	K02–03

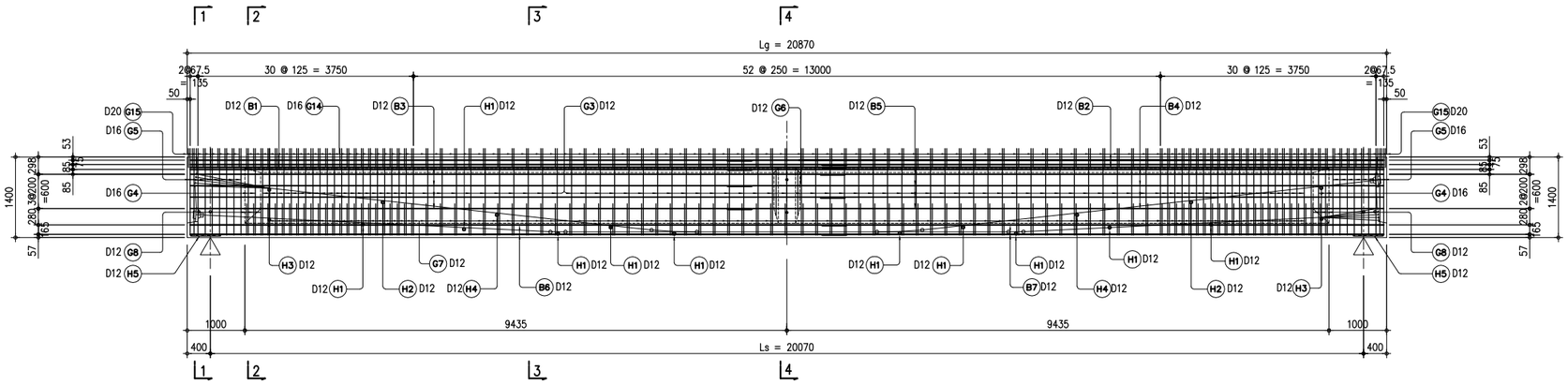

B SIDE VIEW
SCALE 1:50

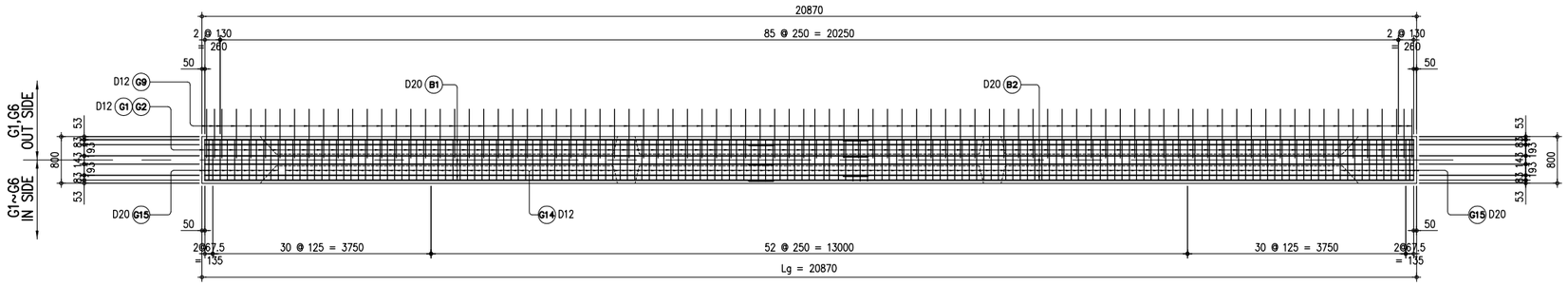

A PLAN
SCALE 1:50

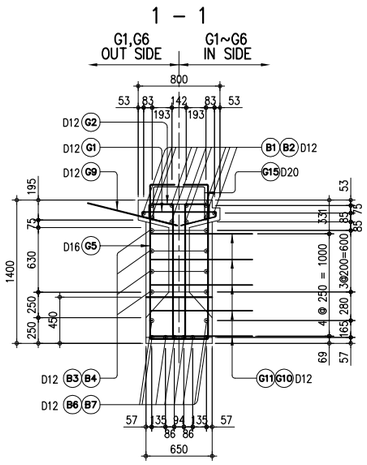

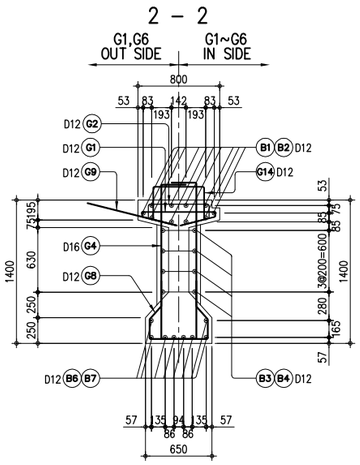

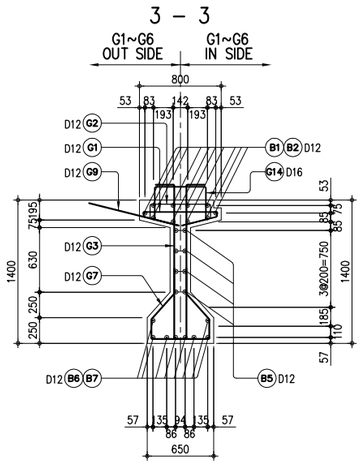

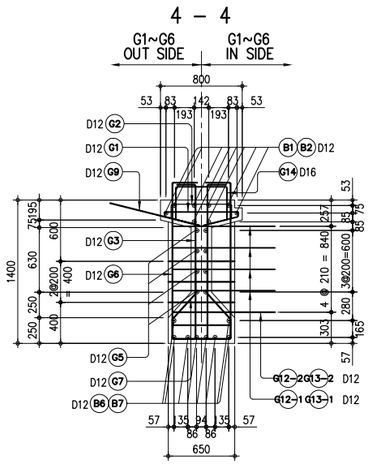

C GIRDER CROSS SECTION
SCALE 1:30

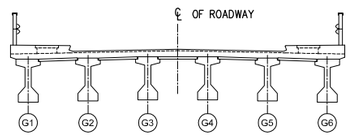

D LOCATION MAP
SCALE 1:100

THE DEMOCRATIC SOCIALIST REPUBLIC OF SRI LANKA
MINISTRY OF HIGHWAYS & ROAD DEVELOPMENT
Road Development Authority

JICA JAPAN INTERNATIONAL COOPERATION AGENCY
ORICONSUL ORIENTAL CONSULTANTS COMPANY LIMITED
in association with
PACIFIC CONSULTANTS INTERNATIONAL

No	REVISION	DATE

COLOMBO OUTER CIRCULAR HIGHWAY PROJECT
(NORTHERN SECTION 1)

OVERPASS BRIDGE NO. 8
REINFORCEMENT BAR ARRANGEMENT OF GIRDER (1/2)

DESIGNED BY:	
CHECKED BY:	
APPROVED BY:	
DWG. NO.	K02-04

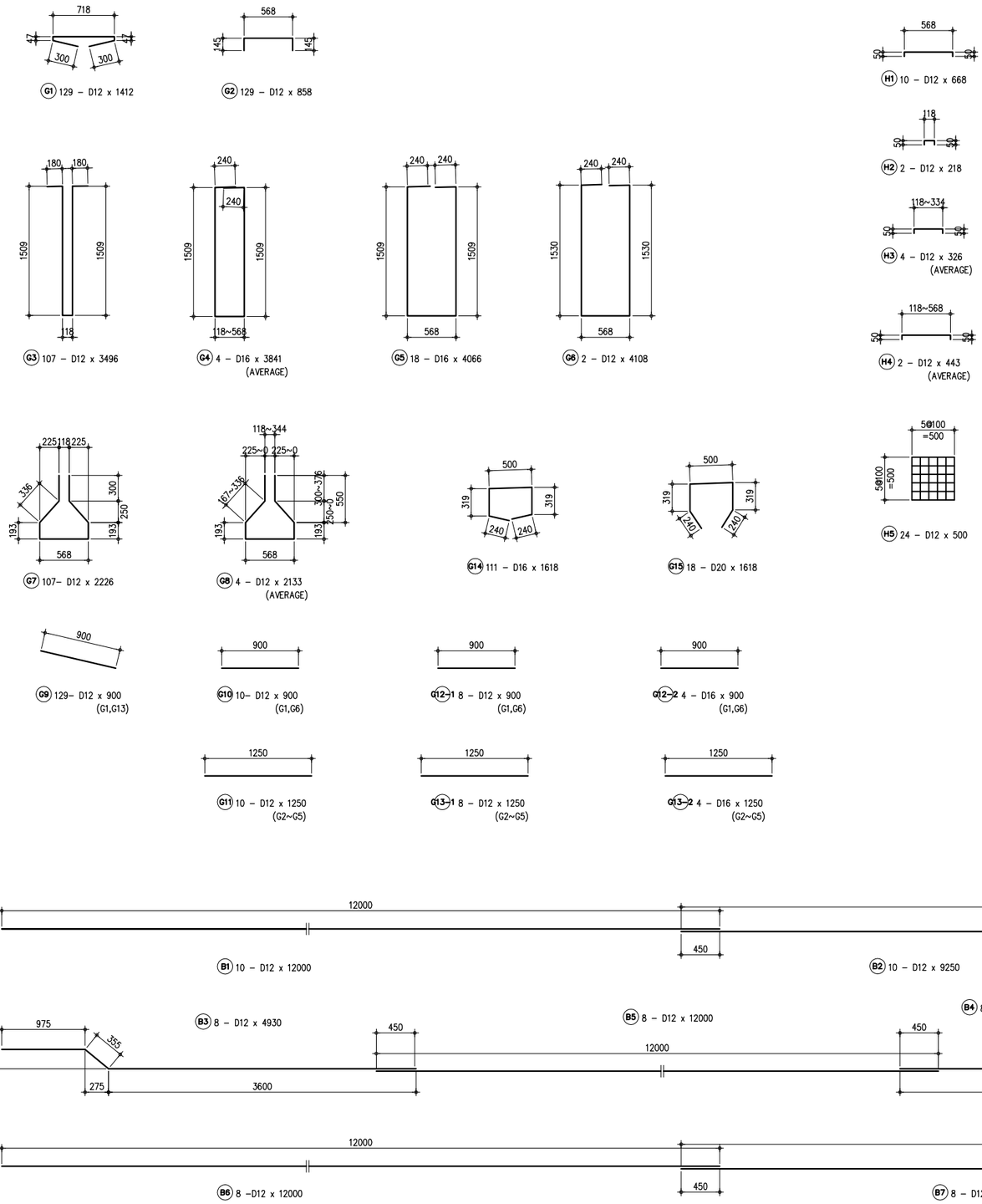

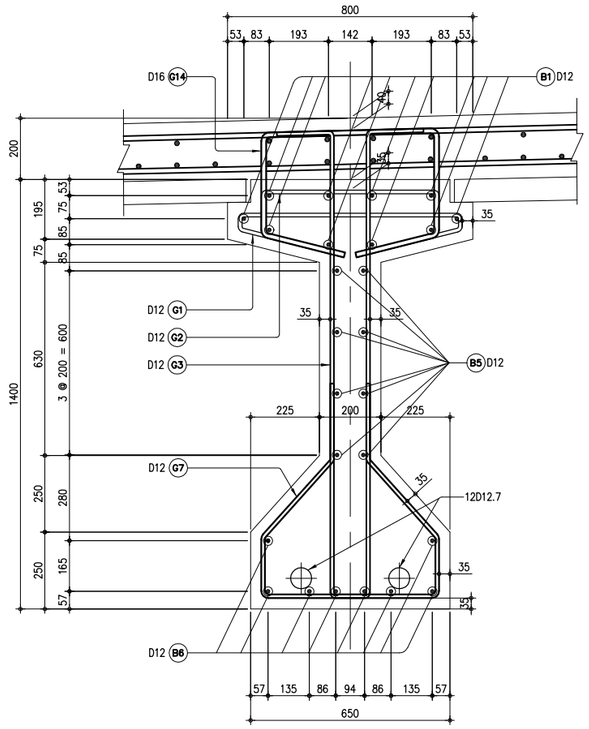

2 DETAIL OF GIRDER CENTER SCALE
SCALE 1:10

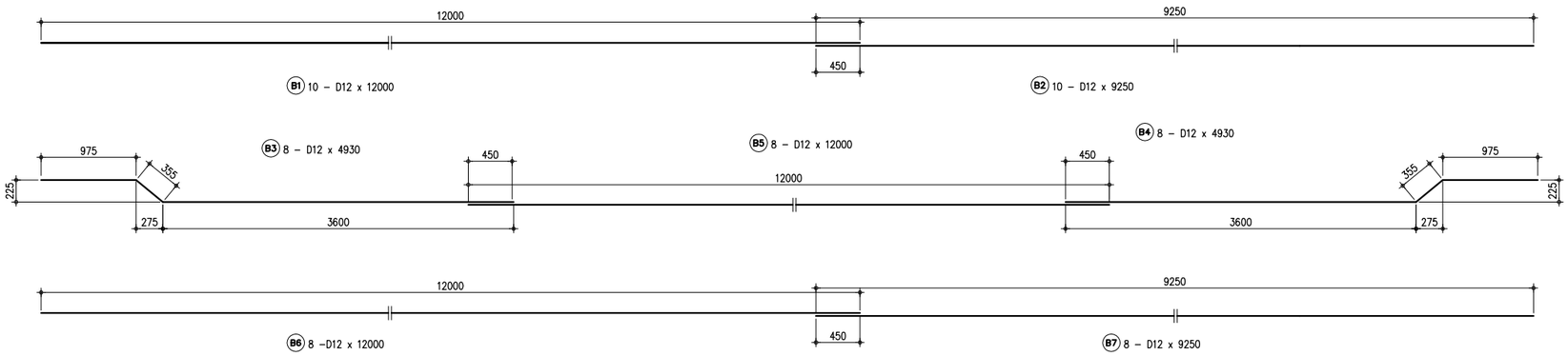

1 REINFORCEMENT OF GIRDER (2)
SCALE 1:30

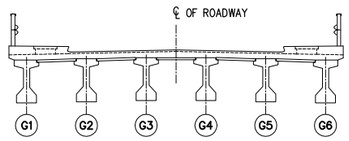

3 LOCATION MAP
NOT TO SCALE

THE DEMOCRATIC SOCIALIST REPUBLIC OF SRI LANKA MINISTRY OF HIGHWAYS & ROAD DEVELOPMENT **Road Development Authority**	JICA JAPAN INTERNATIONAL COOPERATION AGENCY ORICONSUL ORIENTAL CONSULTANTS COMPANY LIMITED in association with PACIFIC CONSULTANTS INTERNATIONAL	No / REVISION / DATE	**COLOMBO OUTER CIRCULAR HIGHWAY PROJECT** **(NORTHERN SECTION 1)** OVERPASS BRIDGE NO. 8 REINFORCEMENT BAR ARRANGEMENT OF GIRDER (2/2)	DESIGNED BY: CHECKED BY: APPROVED BY: DWG. NO.	K02-05

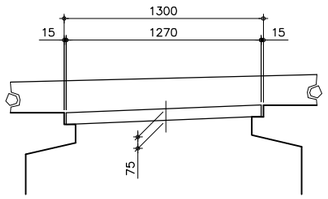

TYPE C

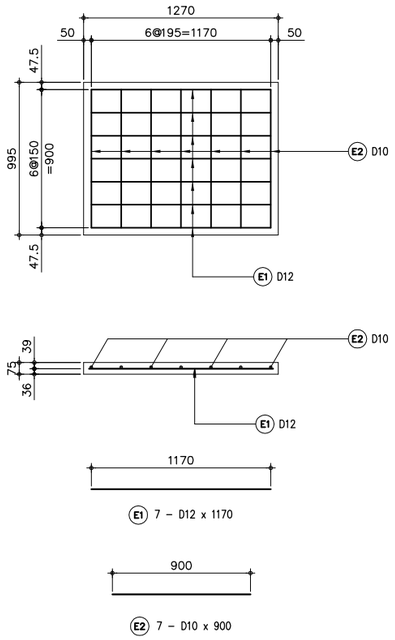

TYPE D

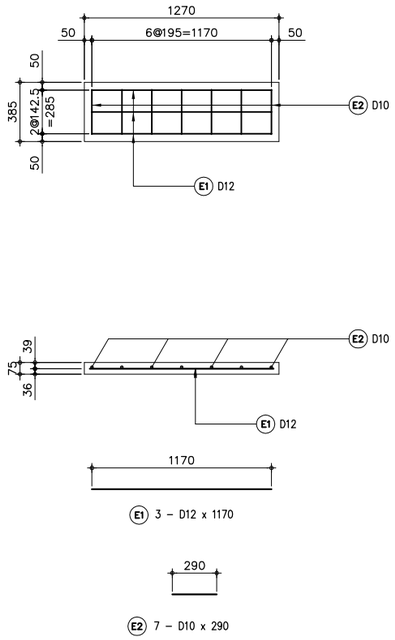

A – DETAIL OF PRECAST PLATE

SCALE 1:20

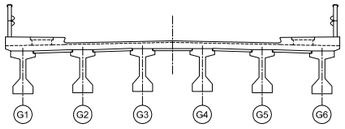

B – LOCATION MAP

SCALE 1:100

THE DEMOCRATIC SOCIALIST REPUBLIC OF SRI LANKA MINISTRY OF HIGHWAYS & ROAD DEVELOPMENT **Road Development Authority**	JICA JAPAN INTERNATIONAL COOPERATION AGENCY ORICONSUL ORIENTAL CONSULTANTS COMPANY LIMITED in association with PACIFIC CONSULTANTS INTERNATIONAL	No	REVISION	DATE	COLOMBO OUTER CIRCULAR HIGHWAY PROJECT (NORTHERN SECTION 1) OVERPASS BRIDGE NO. 8 DETAILS OF PRECAST PC PLATES

DESIGNED BY:	
CHECKED BY:	
APPROVED BY:	
DWG. NO.	K02-06

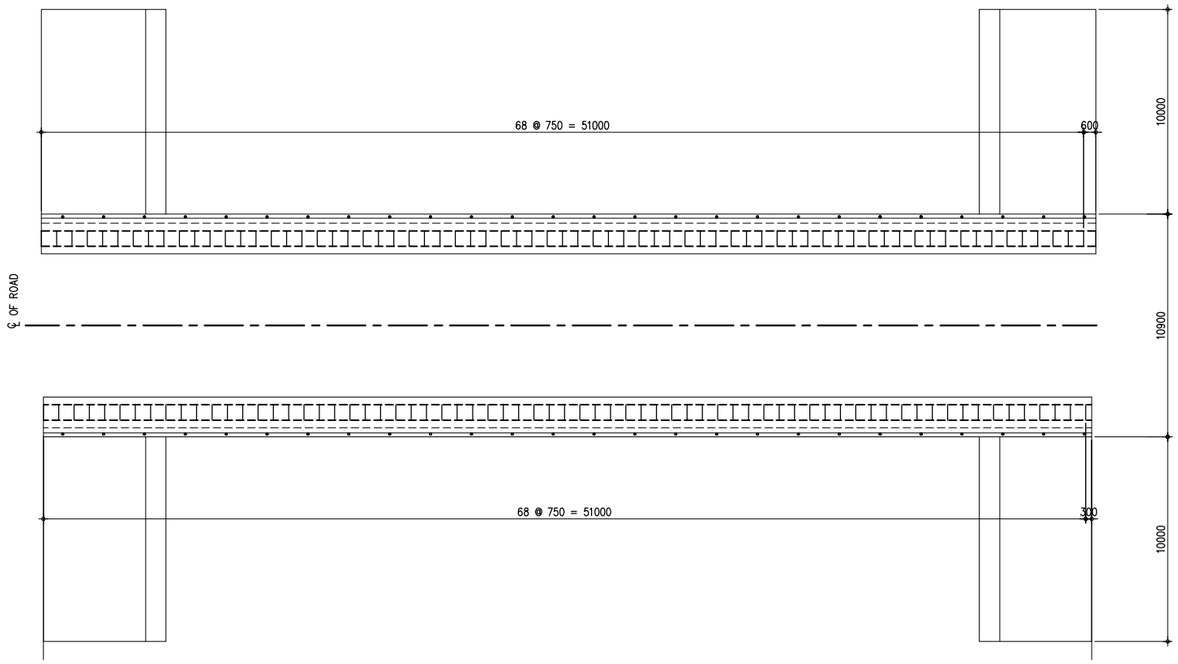

A – PLAN SHOWING SLAB RC COVER LAYOUT
SCALE 1:150

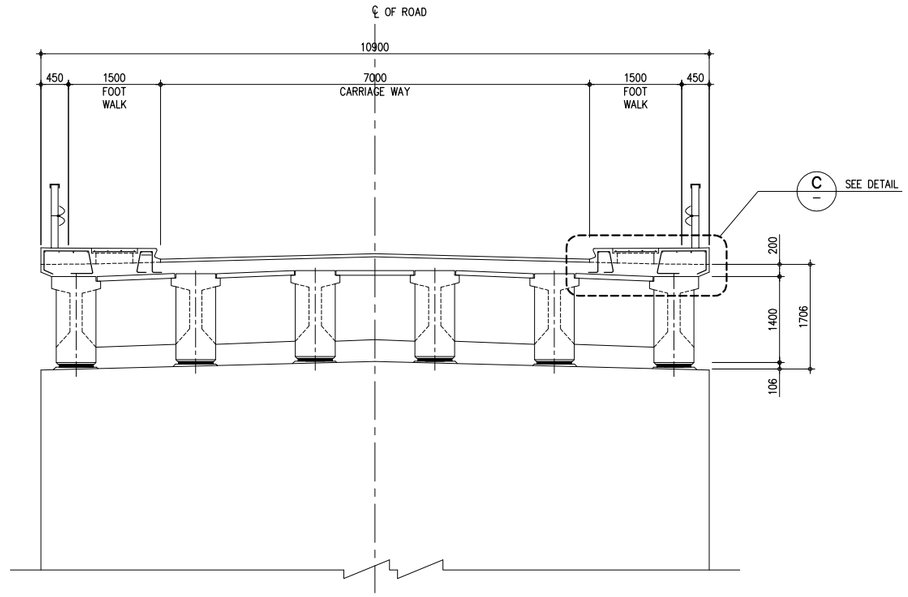

B – SECTION
SCALE 1:50

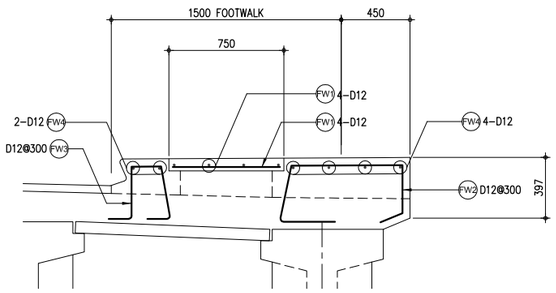

C – DETAIL
SCALE 1:20

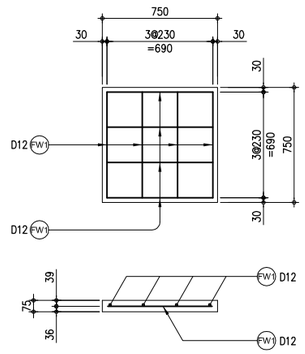

D – DETAILS OF PRECAST PLATE
SCALE 1:20

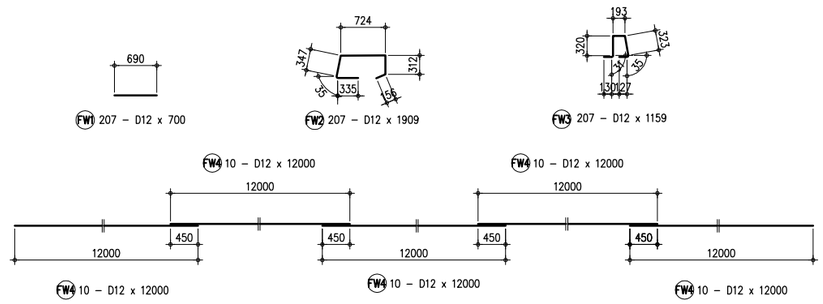

E – BAR BENDING LAYOUT
SCALE 1:50

THE DEMOCRATIC SOCIALIST REPUBLIC OF SRI LANKA
MINISTRY OF HIGHWAYS & ROAD DEVELOPMENT
Road Development Authority

JICA JAPAN INTERNATIONAL COOPERATION AGENCY
ORICONSUL ORIENTAL CONSULTANTS COMPANY LIMITED
in association with
PACIFIC CONSULTANTS INTERNATIONAL

No	REVISION	DATE

COLOMBO OUTER CIRCULAR HIGHWAY PROJECT
(NORTHERN SECTION 1)

OVERPASS BRIDGE NO. 8
FOOTWALK DETAIL

DESIGNED BY:	
CHECKED BY:	
APPROVED BY:	
DWG. NO.	K02-07

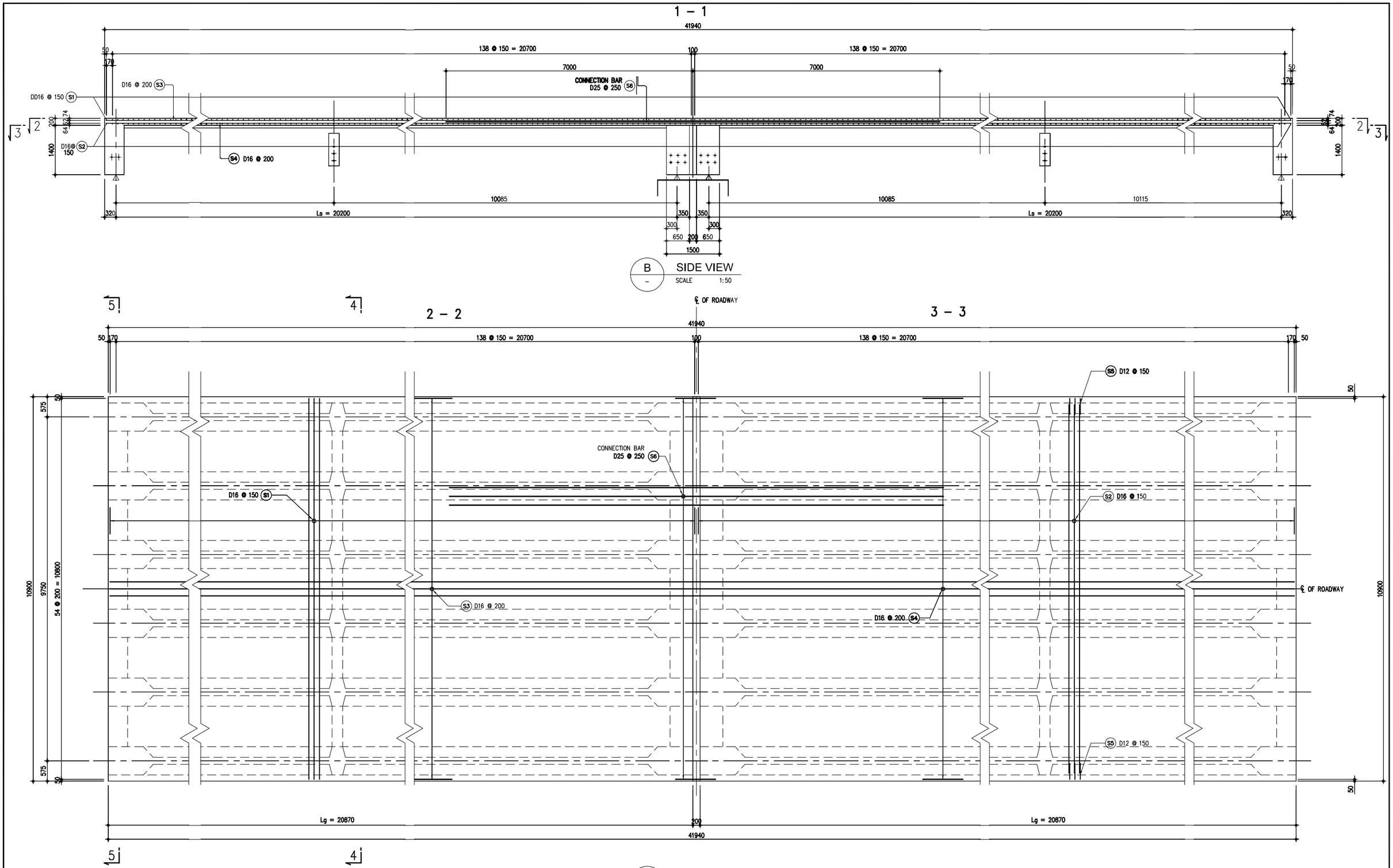

THE DEMOCRATIC SOCIALIST REPUBLIC OF SRI LANKA
MINISTRY OF HIGHWAYS & ROAD DEVELOPMENT
Road Development Authority

JAPAN INTERNATIONAL COOPERATION AGENCY
ORIENTAL CONSULTANTS COMPANY LIMITED
in association with
PACIFIC CONSULTANTS INTERNATIONAL

No	REVISION	DATE

COLOMBO OUTER CIRCULAR HIGHWAY PROJECT
(NORTHERN SECTION 1)

OVERPASS BRIDGE NO. 8
REINFORCEMENT BAR ARRANGEMENT OF SLAB (1/2)

DESIGNED BY:	
CHECKED BY:	
APPROVED BY:	
DWG. NO.	K02-08

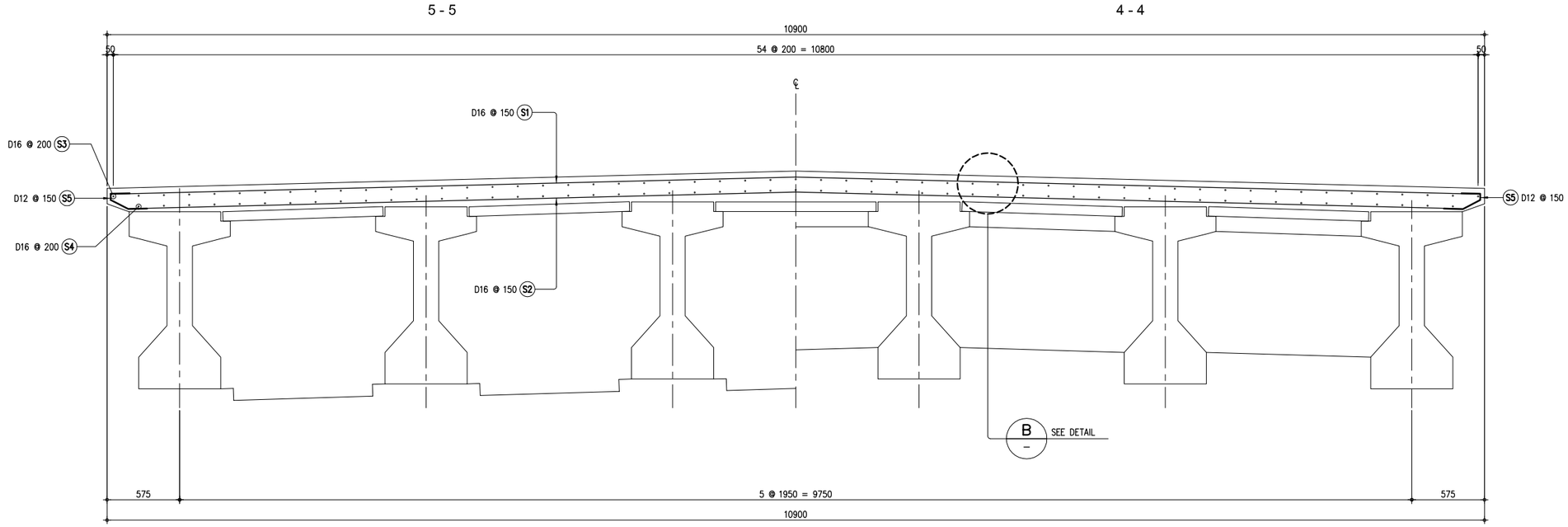

A – CROSS SECTION
SCALE 1:20

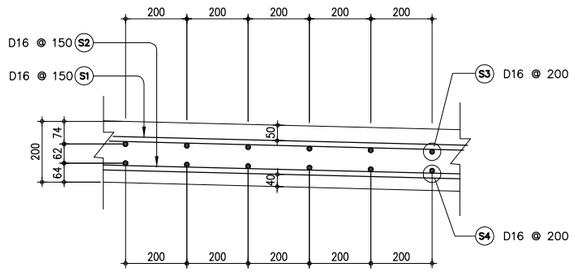

B – DETAIL
SCALE 1:10

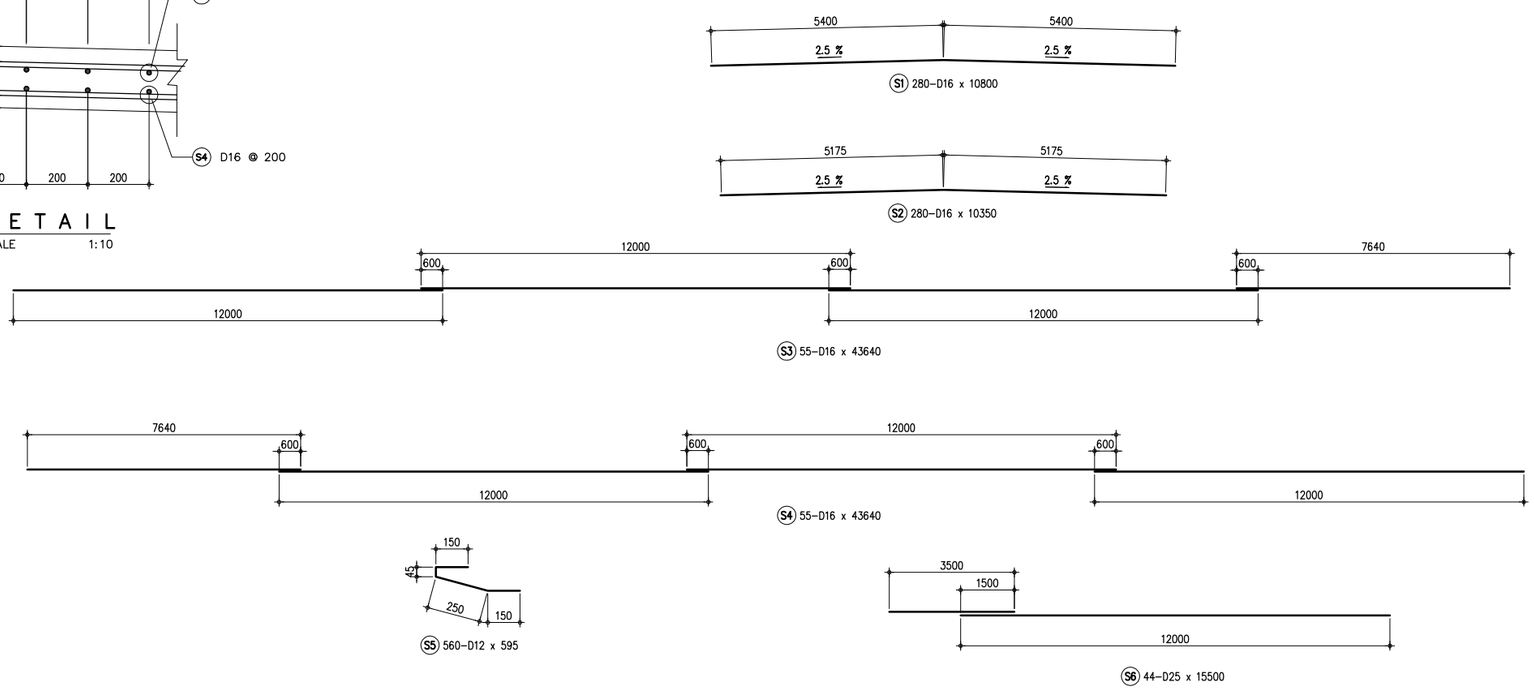

C – BAR BENDING LAYOUT
SCALE NTS

THE DEMOCRATIC SOCIALIST REPUBLIC OF SRI LANKA MINISTRY OF HIGHWAYS & ROAD DEVELOPMENT **Road Development Authority**	JICA JAPAN INTERNATIONAL COOPERATION AGENCY ORIENTAL CONSULTANTS COMPANY LIMITED in association with PACIFIC CONSULTANTS INTERNATIONAL	No	REVISION	DATE	COLOMBO OUTER CIRCULAR HIGHWAY PROJECT (NORTHERN SECTION 1) OVERPASS BRIDGE NO. 8 REINFORCEMENT BAR ARRANGEMENT OF SLAB (2/2)	DESIGNED BY: CHECKED BY: APPROVED BY: DWG. NO.	 K02-09

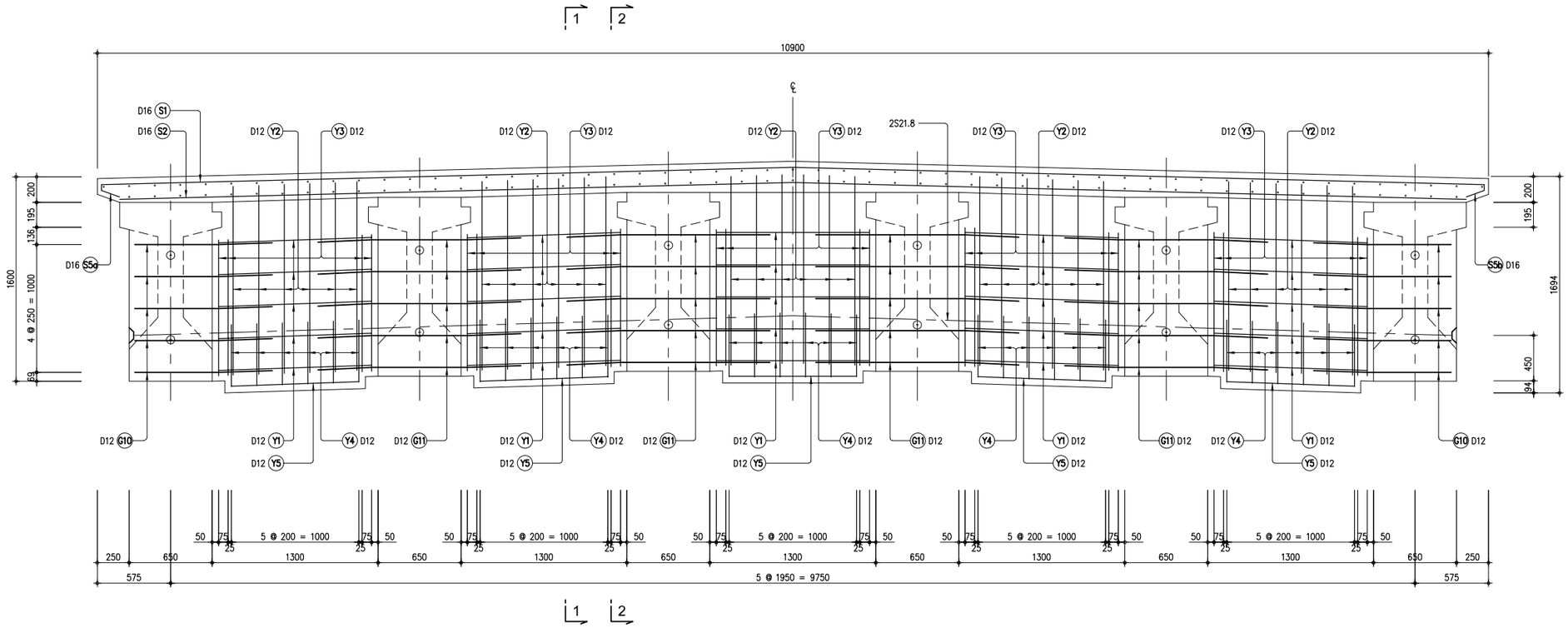

A CROSS SECTION
SCALE 1:20

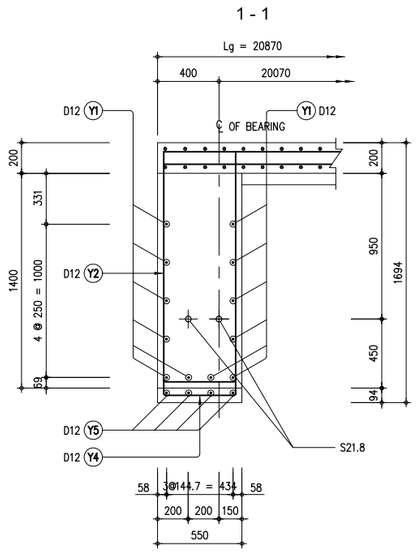

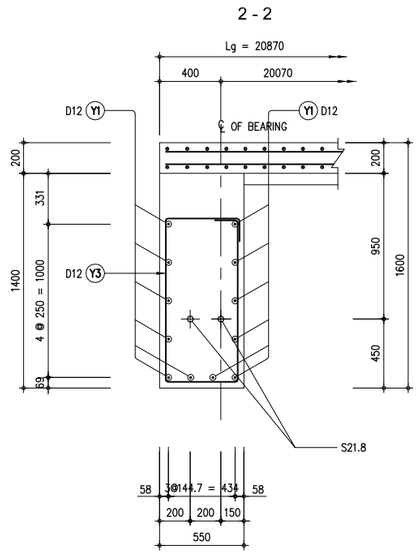

B SIDE VIEW
SCALE 1:20

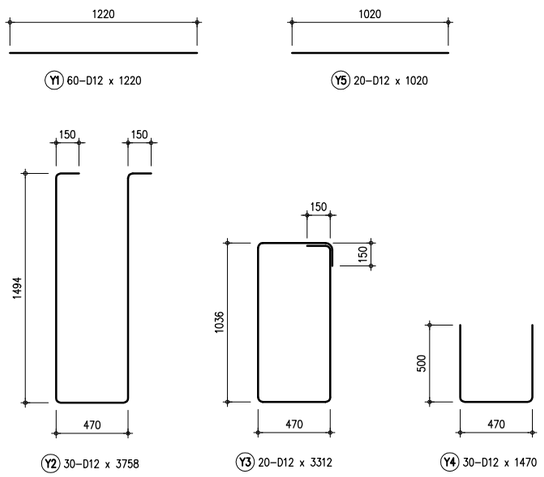

C BAR BENDING LAYOUT
SCALE 1:20

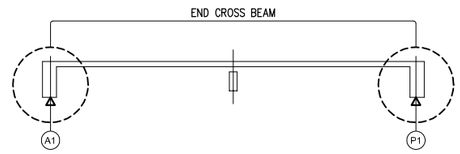

E LOCATION MAP
SCALE 1:30

THE DEMOCRATIC SOCIALIST REPUBLIC OF SRI LANKA
MINISTRY OF HIGHWAYS & ROAD DEVELOPMENT
Road Development Authority

JICA JAPAN INTERNATIONAL COOPERATION AGENCY
ORICONSUL ORIENTAL CONSULTANTS COMPANY LIMITED
in association with
PACIFIC CONSULTANTS INTERNATIONAL

No	REVISION	DATE

COLOMBO OUTER CIRCULAR HIGHWAY PROJECT
(NORTHERN SECTION 1)

OVERPASS BRIDGE NO. 8
REINFORCEMENT BAR ARRANGEMENT OF END CROSS BEAM

DESIGNED BY:	
CHECKED BY:	
APPROVED BY:	
DWG. NO.	K02-10

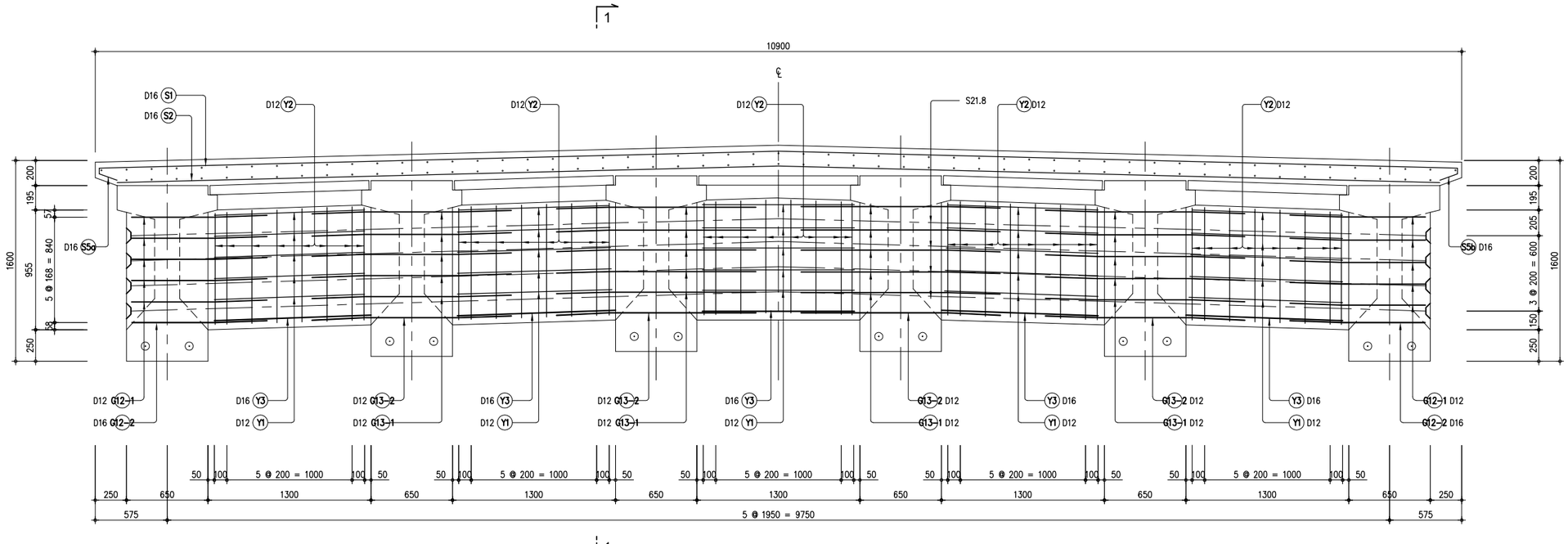

A CROSS SECTION
SCALE 1:20

1 - 1

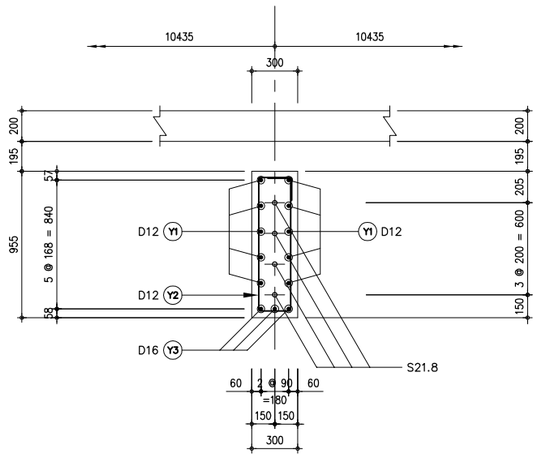

B SIDE VIEW
SCALE 1:20

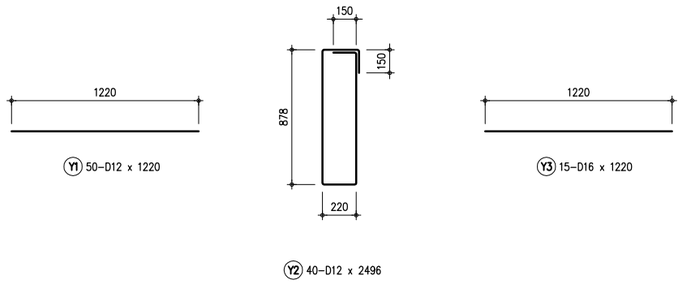

C BAR BENDING LAYOUT
SCALE 1:20

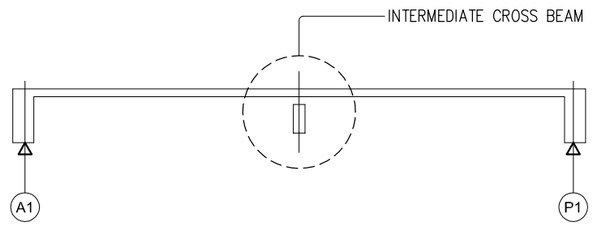

D LOCATION MAP
SCALE NTS

THE DEMOCRATIC SOCIALIST REPUBLIC OF SRI LANKA
MINISTRY OF HIGHWAYS & ROAD DEVELOPMENT
Road Development Authority

JICA JAPAN INTERNATIONAL COOPERATION AGENCY
ORICONSUL ORIENTAL CONSULTANTS COMPANY LIMITED
in association with
PACIFIC CONSULTANTS INTERNATIONAL

No	REVISION	DATE

COLOMBO OUTER CIRCULAR HIGHWAY PROJECT
(NORTHERN SECTION 1)

OVERPASS BRIDGE NO. 8
REINFORCEMENT BAR ARRANGEMENT OF INTERMEDIATE CROSS BEAM

DESIGNED BY:	
CHECKED BY:	
APPROVED BY:	
DWG. NO.	K02-11

3 - 3

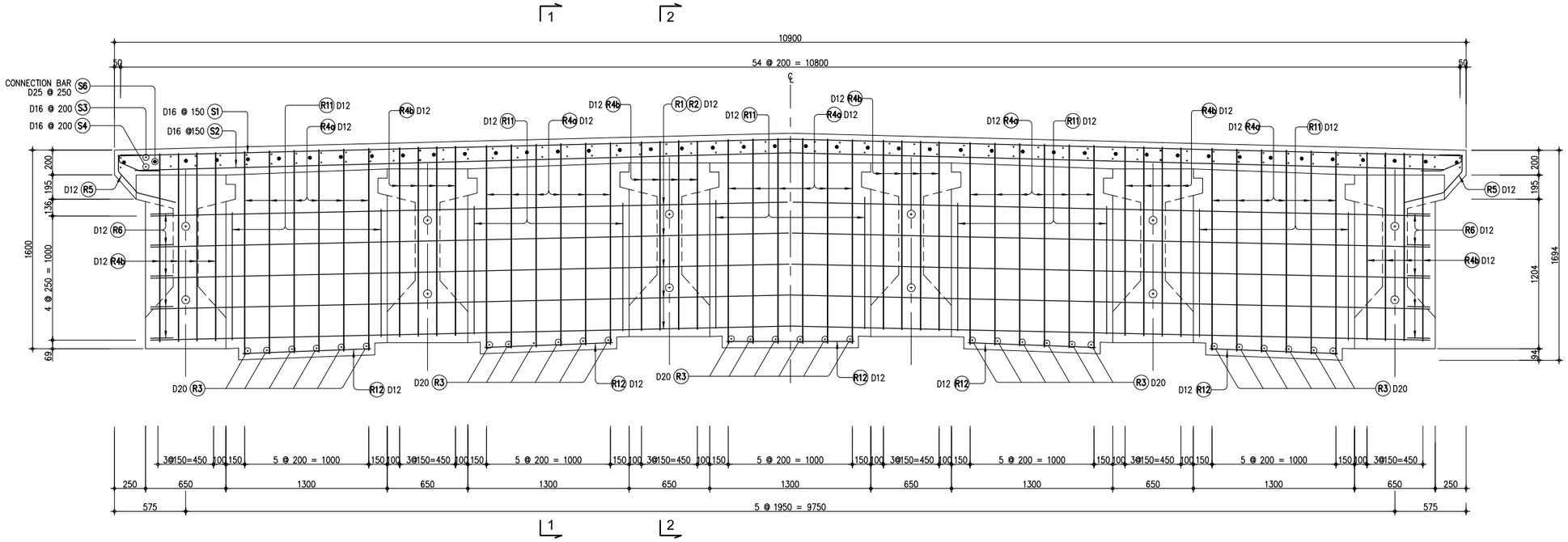

A CROSS SECTION
SCALE 1:20

4 - 4

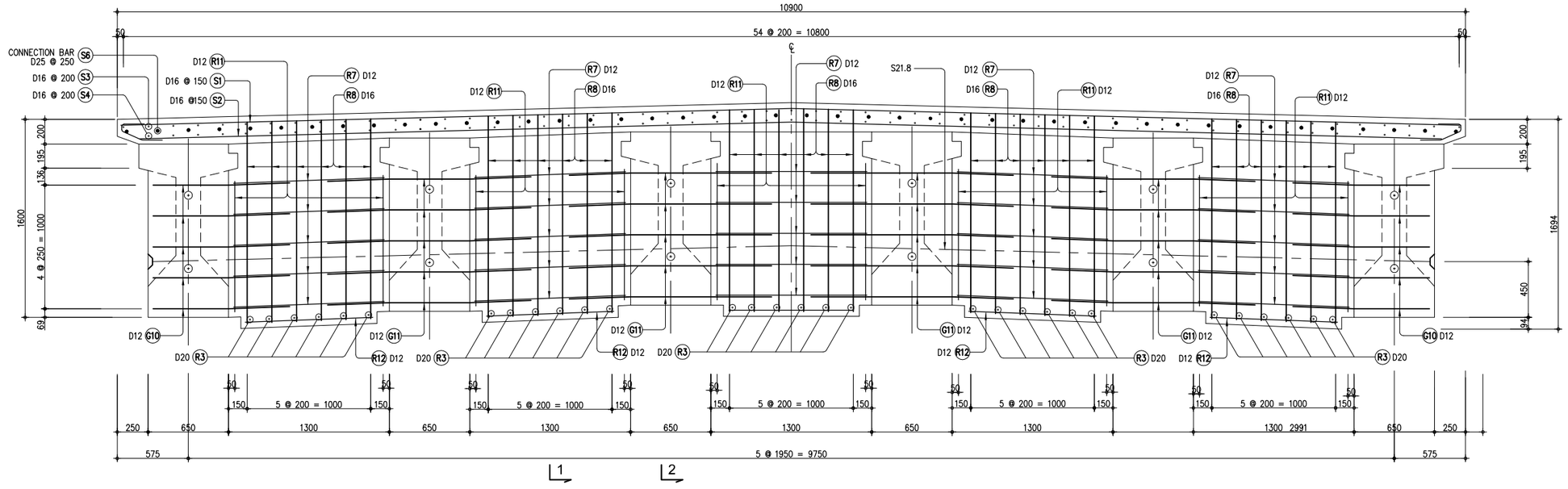

A2 CROSS SECTION
SCALE 1:20

THE DEMOCRATIC SOCIALIST REPUBLIC OF SRI LANKA
MINISTRY OF HIGHWAYS & ROAD DEVELOPMENT
Road Development Authority

JAPAN INTERNATIONAL COOPERATION AGENCY
ORIENTAL CONSULTANTS COMPANY LIMITED
in association with
PACIFIC CONSULTANTS INTERNATIONAL

No	REVISION	DATE

COLOMBO OUTER CIRCULAR HIGHWAY PROJECT
(NORTHERN SECTION 1)

OVERPASS BRIDGE NO. 8
SLAB AND GIRDER CONNECTION DETAILS (1/2)

DESIGNED BY:	
CHECKED BY:	
APPROVED BY:	
DWG. NO.	K02-12

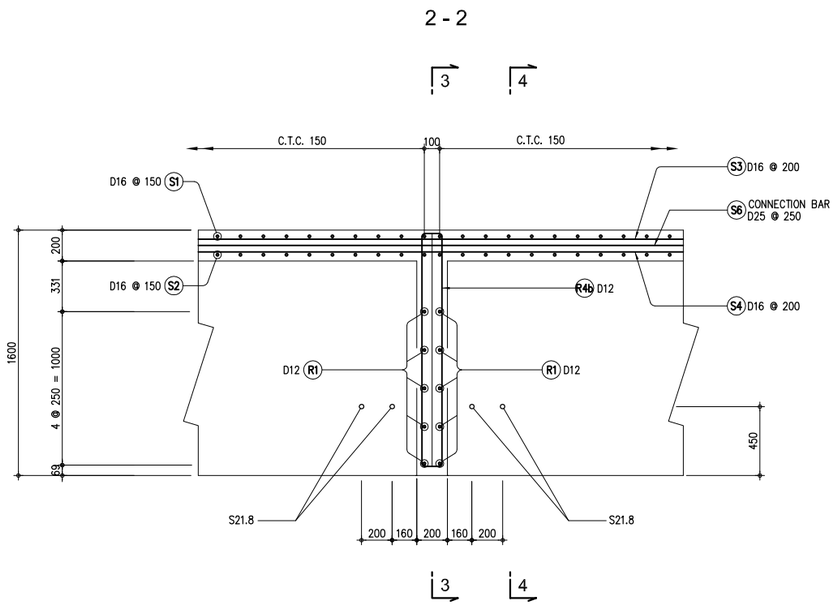

B SIDE VIEW
SCALE 1:20

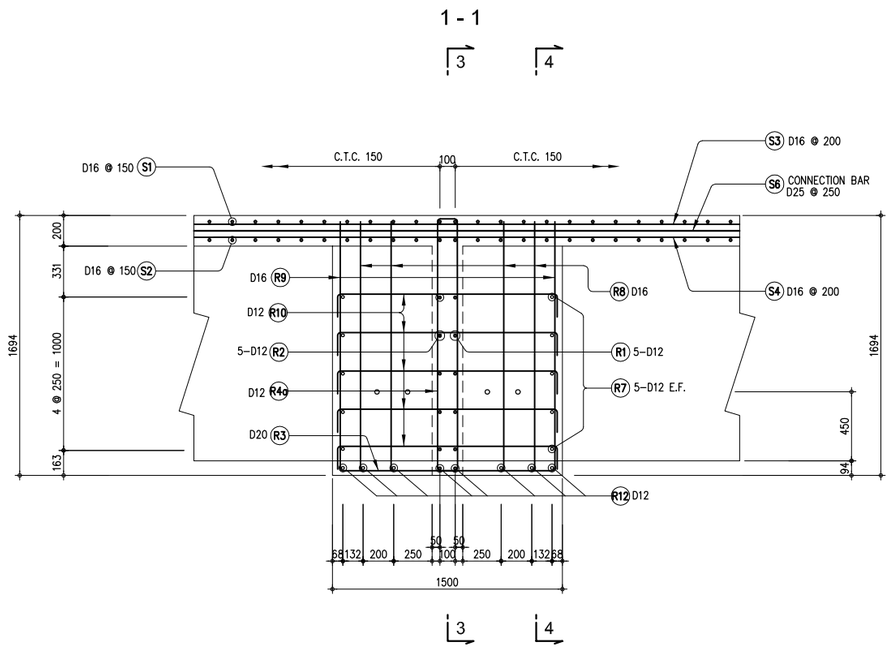

C SIDE VIEW
SCALE 1:20

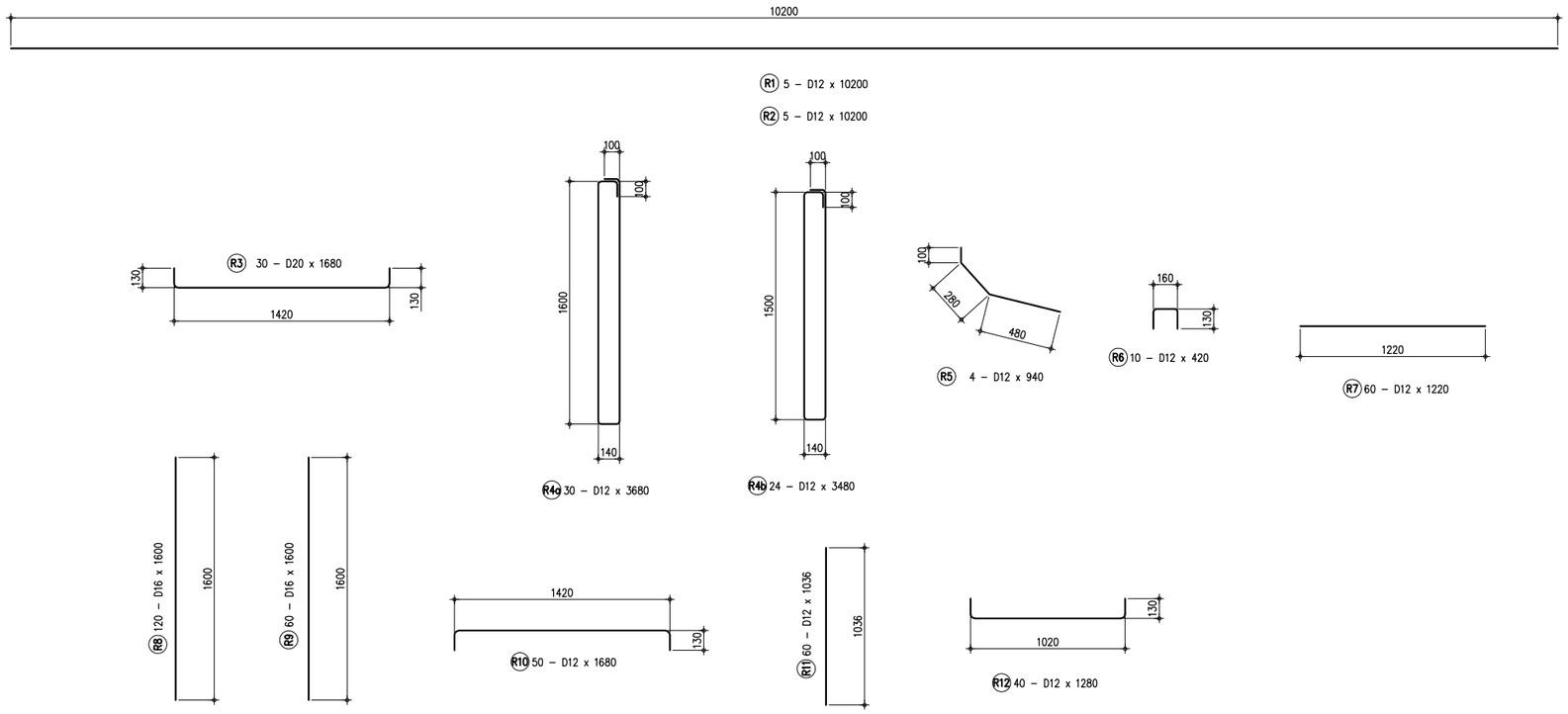

SLAB CONNECTION BAR BENDING

THE DEMOCRATIC SOCIALIST REPUBLIC OF SRI LANKA MINISTRY OF HIGHWAYS & ROAD DEVELOPMENT **Road Development Authority**	JICA JAPAN INTERNATIONAL COOPERATION AGENCY ORICONSUL ORIENTAL CONSULTANTS COMPANY LIMITED in association with PACIFIC CONSULTANTS INTERNATIONAL	No / REVISION / DATE	COLOMBO OUTER CIRCULAR HIGHWAY PROJECT (NORTHERN SECTION 1) OVERPASS BRIDGE NO. 8 SLAB AND GIRDER CONNECTION DETAILS (2/2)	DESIGNED BY: CHECKED BY: APPROVED BY: DWG. NO.	K02-13

ESTIMATED QUANTITIES FOR SUPERSTRUCTURE

ESTIMATED QUANTITIES FOR SUPERSTRUCTURE

REINFORCING BARS

LOCATION	BAR MARK	SPACING	QTY. (pcs)	SIZE (mm)	DIMENSION mm (OUT TO OUT) a	b	c	d	e	f	g	LENGTH PER BAR (mm)	TOTAL LENGTH (m)	UNIT WEIGHT (kg/m)	TOTAL WEIGHT (kg)	CONCRETE VOLUME (m^3)
END CROSS BEAM (ABUTMENTS)	Y1	AS SHOWN	60	12	1220							1220	73.20	0.888	65.00	
	Y2	AS SHOWN	30	12	150	1494	470	1494	150			3758	112.74	0.888	100.11	
	Y3	AS SHOWN	20	12	150	470	1036	470	1036	150		3312	66.24	0.888	58.82	
	Y4	AS SHOWN	30	12	500	470	500					1470	44.10	0.888	39.16	
	Y5	AS SHOWN	20	12	1020							1020	20.40	0.888	18.12	
										A. TOTAL QUANTITY FOR END DIAPPHRAGM					281.21	
										B. TOTAL NUMBER OF END DIAPHRAGM					4.00	
										C. SUB TOTAL QUANTITY END DIAPHRAGM					1124.85	11.788
INTERMEDIATE CROSS BEAM	Y1	AS SHOWN	50	12	1220							1220	61.00	0.888	54.17	
	Y2	AS SHOWN	40	12	150	220	878	220	878	150		2496	99.84	0.888	88.66	
	Y3	AS SHOWN	15	16	1220							1220	18.30	1.579	28.90	
										A. TOTAL QUANTITY PER INTERMEDIATE					171.72	
										B. TOTAL NUMBER OF INTERMEDIATE DIAPRAGMS					2.00	
										C. SUB TOTAL QUANTITY OF INTERMEDIATE DIAPHRAMS					343.44	4.500
SLAB CONNECTION AND CROSS BEAM	R1	AS SHOWN	5	12	10200							10200	51.00	0.888	45.29	
	R2	AS SHOWN	5	12	10200							10200	51.00	0.888	45.29	
	R3	AS SHOWN	30	20	130	1420	130					1680	50.40	2.466	124.29	
	R4a	AS SHOWN	30	12	100	140	1600	140	1600	100		3680	110.40	0.888	98.04	
	R4b	AS SHOWN	24	12	100	140	1500	140	1500	100		3480	83.52	0.888	74.17	
	R5	AS SHOWN	4	12	100	280	480					860	3.44	0.888	3.05	
	R6	AS SHOWN	10	12	130	160	130					420	4.20	0.888	3.73	
	R7	AS SHOWN	60	12	1220							1220	73.20	0.888	65.00	
	R8	AS SHOWN	120	16	1600							1600	192.00	1.579	303.17	
	R9	AS SHOWN	90	16	1600							1600	144.00	1.579	227.38	
	R10	AS SHOWN	50	12	130	1420	130					1680	84.00	0.888	74.59	
	R11	AS SHOWN	60	12	1036							1036	62.16	0.888	55.20	
	R12	AS SHOWN	40	12	130	1020	130					1280	51.20	0.888	45.47	
										TOTAL QUANTITY					1164.65	16.842
SLAB	S1	150	280	16	5400	5400						10800	3024.00	1.579	4774.90	
	S2	150	280	16	5175	5175						10350	2898.00	1.579	4575.94	
	S3	200	55	16	12000	12000	12000	7640				43640	2400.20	1.579	3789.92	
	S4	200	55	16	12000	12000	12000	7640				43640	2400.20	1.579	3789.92	
	S5	150	560	12	150	45	250	150				595	333.20	0.888	295.88	
	S6	250	44	25	3500	12000						15500	682.00	3.854	2628.43	
										TOTAL QUANTITY					19854.98	90.84
FOOTWALK	FW1	300	552	12	700							700	386.40	0.888	343.12	
	FW2	300	172	12	AS SHOWN							1909	328.35	0.888	291.26	
	FW3	300	172	12	AS SHOWN							1159	199.35	0.888	177.02	
	FW4	300	12	12	12000	12000	12000	7230				43230	518.76	0.888	460.66	
										A. TOTAL QUANTITY PER SPAN					1,272.06	21.904
										B. TOTAL NUMBER OF SPANS						2.000
										C. SUB TOTAL QUANTITY FOR SIDEWALKS = (AxB)					2,544.12	43.808

DIMENSION DETAILS FOR ABUTMENT-A1 (Scale 1:100)

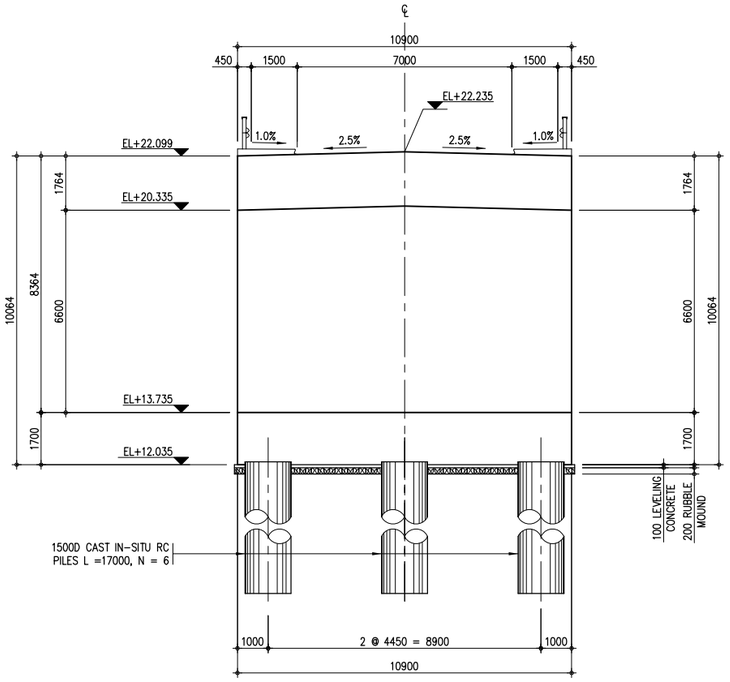

1 - 1

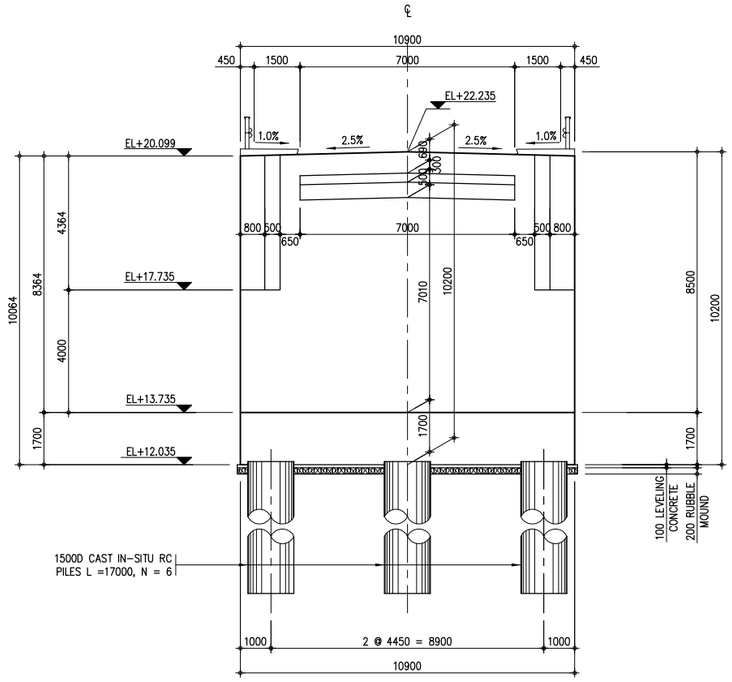

2 - 2

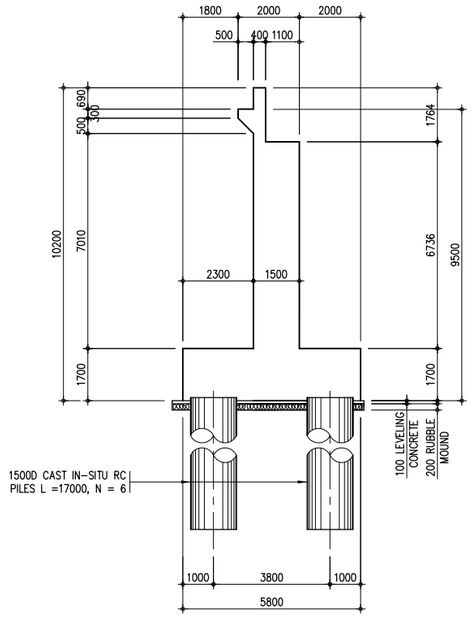

3 - 3

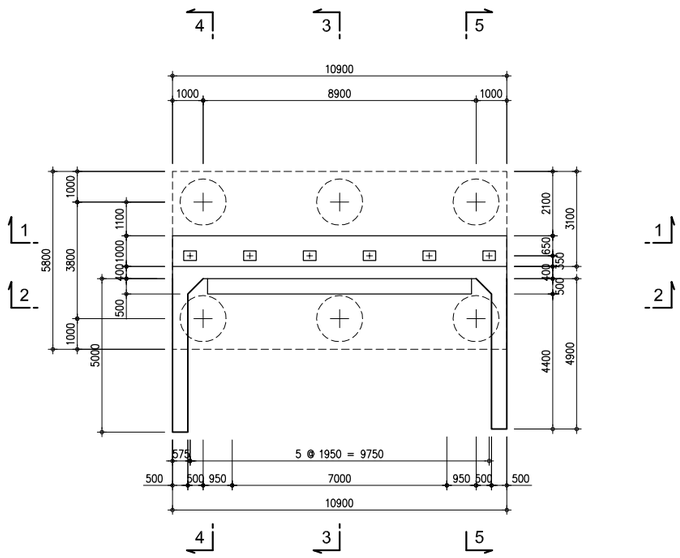

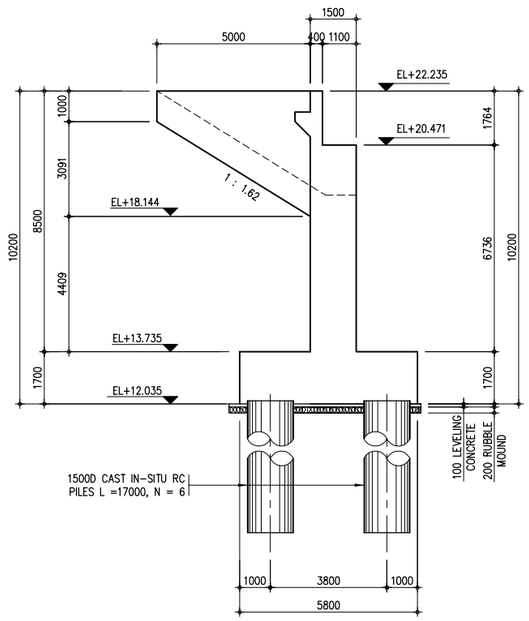

4 - 4

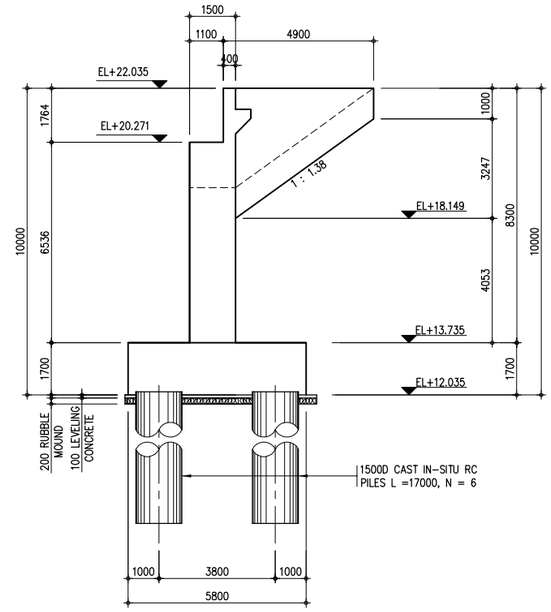

5 - 5

THE DEMOCRATIC SOCIALIST REPUBLIC OF SRI LANKA MINISTRY OF HIGHWAYS & ROAD DEVELOPMENT **Road Development Authority**	JICA JAPAN INTERNATIONAL COOPERATION AGENCY ORICONSUL ORIENTAL CONSULTANTS COMPANY LIMITED in association with PACIFIC CONSULTANTS INTERNATIONAL	No / REVISION / DATE	COLOMBO OUTER CIRCULAR HIGHWAY PROJECT (NORTHERN SECTION 1) OVERPASS BRIDGE NO. 8 DIMENSION DETAILS FOR ABUTMENT - A1	DESIGNED BY: CHECKED BY: APPROVED BY: DWG. NO.	K02-15

DIMENSION DETAILS FOR PIER-1 (Scale 1:100)

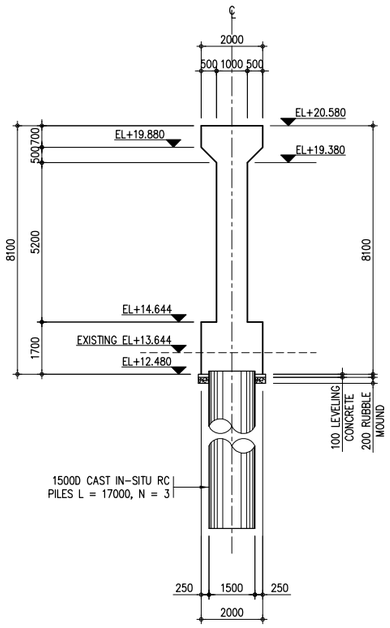

1 - 1

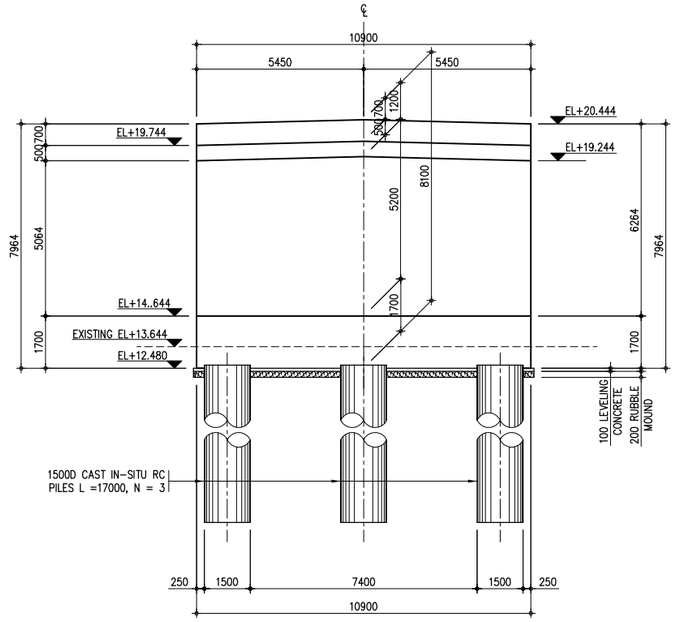

2 - 2

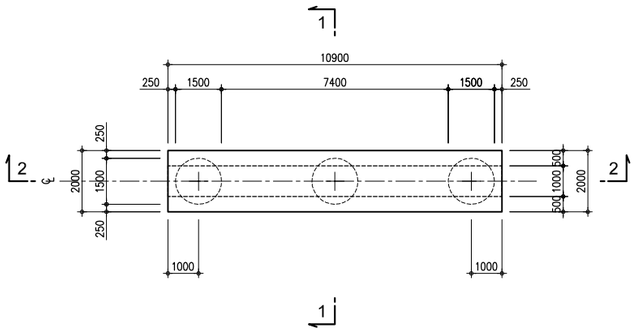

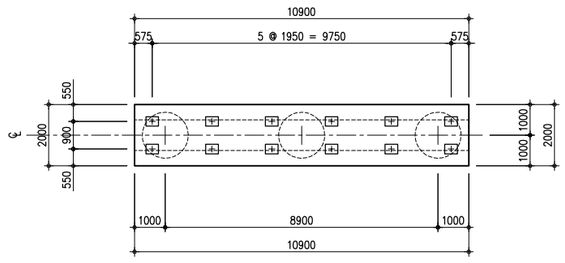

PLAN OF BEARING PAD

THE DEMOCRATIC SOCIALIST REPUBLIC OF SRI LANKA MINISTRY OF HIGHWAYS & ROAD DEVELOPMENT **Road Development Authority**	JICA JAPAN INTERNATIONAL COOPERATION AGENCY ORIENTAL CONSULTANTS COMPANY LIMITED in association with PACIFIC CONSULTANTS INTERNATIONAL	No	REVISION	DATE	COLOMBO OUTER CIRCULAR HIGHWAY PROJECT (NORTHERN SECTION 1) OVERPASS BRIDGE NO. 8 DIMENSION DETAILS FOR PIER - 1	DESIGNED BY: CHECKED BY: APPROVED BY: DWG. NO.	K02-16

DIMENSION DETAILS FOR ABUTMENT-A2 (Scale 1:100)

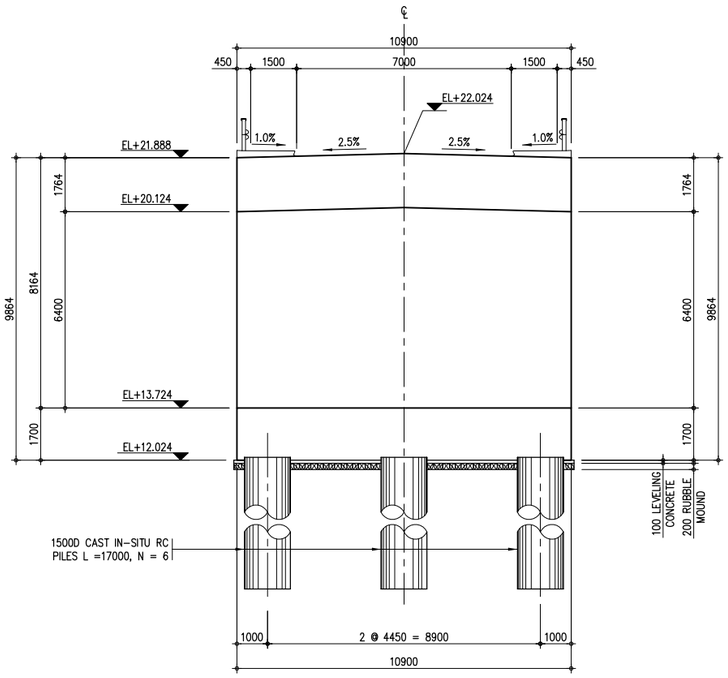

1 - 1

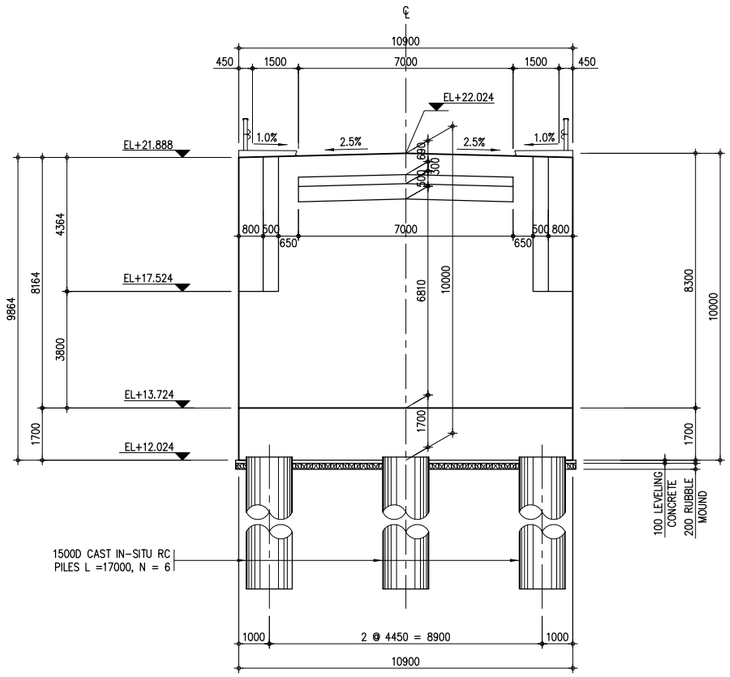

2 - 2

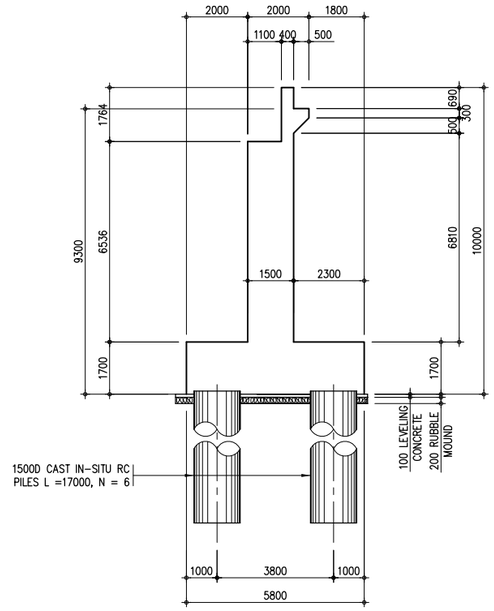

3 - 3

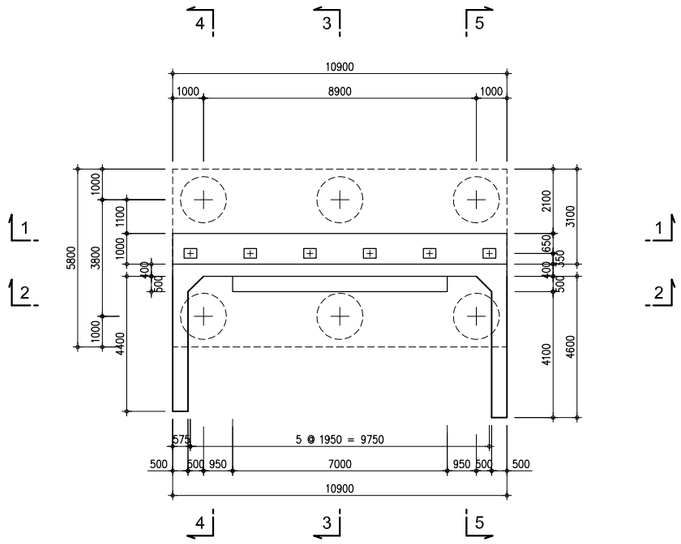

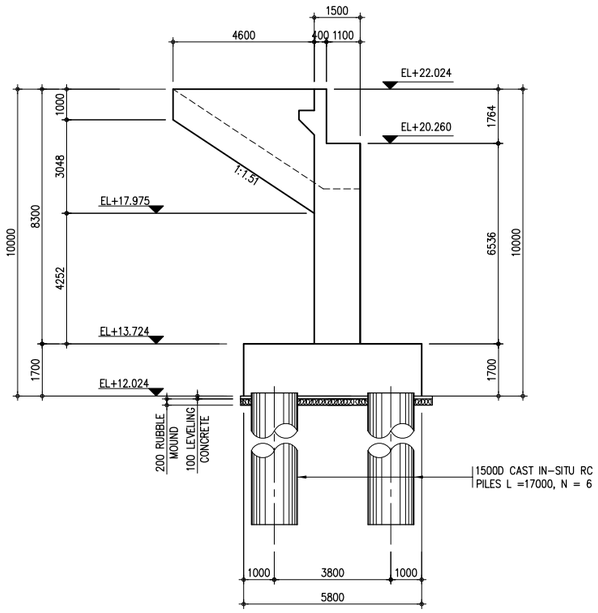

4 - 4

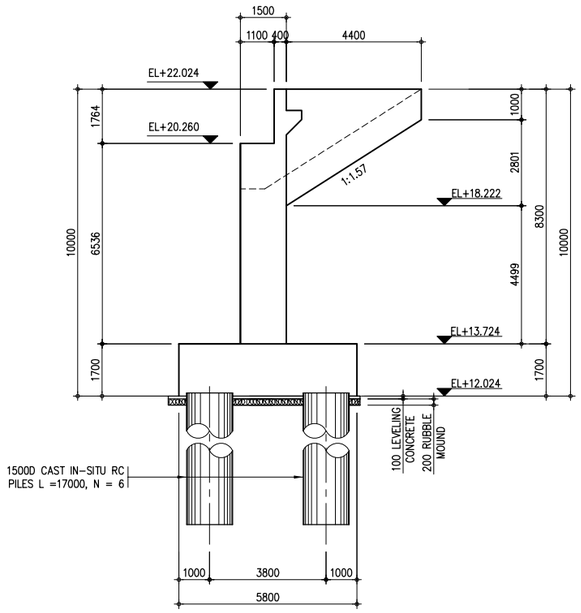

5 - 5

THE DEMOCRATIC SOCIALIST REPUBLIC OF SRI LANKA MINISTRY OF HIGHWAYS & ROAD DEVELOPMENT **Road Development Authority**	JICA JAPAN INTERNATIONAL COOPERATION AGENCY ORICONSUL ORIENTAL CONSULTANTS COMPANY LIMITED in association with PACIFIC CONSULTANTS INTERNATIONAL	No / REVISION / DATE	COLOMBO OUTER CIRCULAR HIGHWAY PROJECT (NORTHERN SECTION 1) OVERPASS BRIDGE NO. 8 DIMENSION DETAILS FOR ABUTMENT - A2	DESIGNED BY: CHECKED BY: APPROVED BY: DWG. NO.	K02-17

REINFORCEMENT OF ABUTMENT A1 AND A2 (1) Scale 1:50

1 - 1

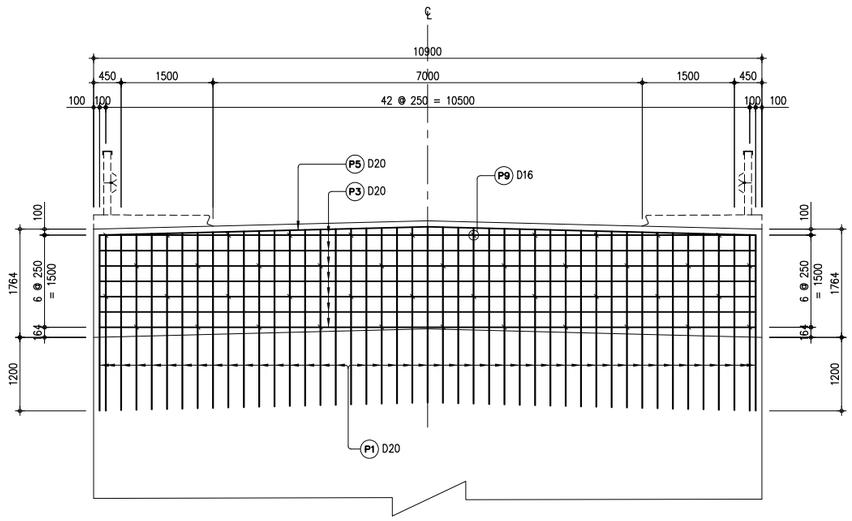

2 - 2

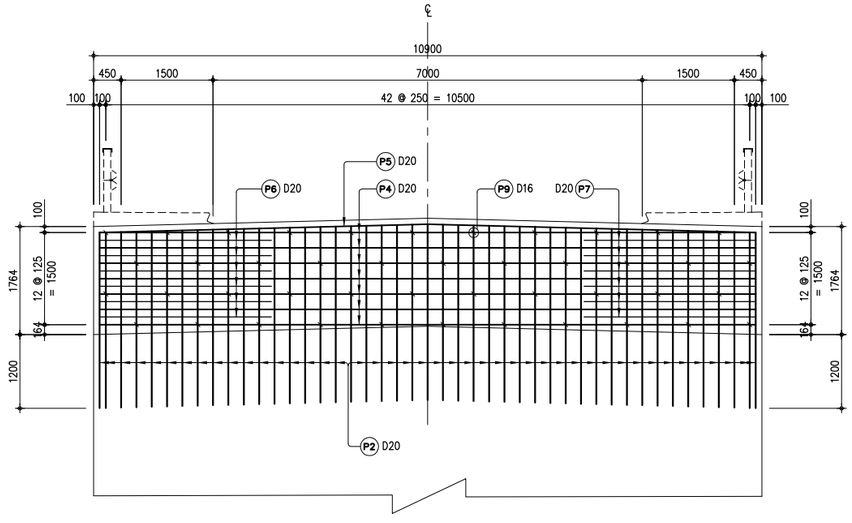

3 - 3

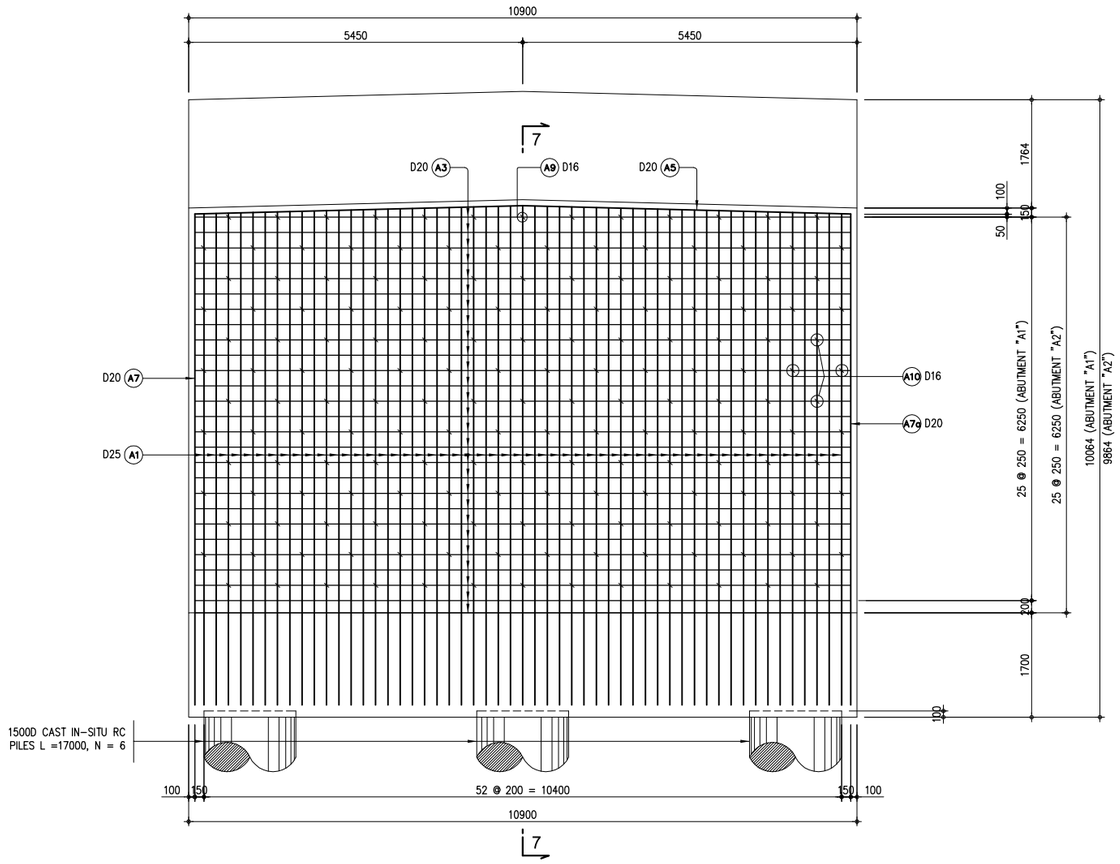

4 - 4

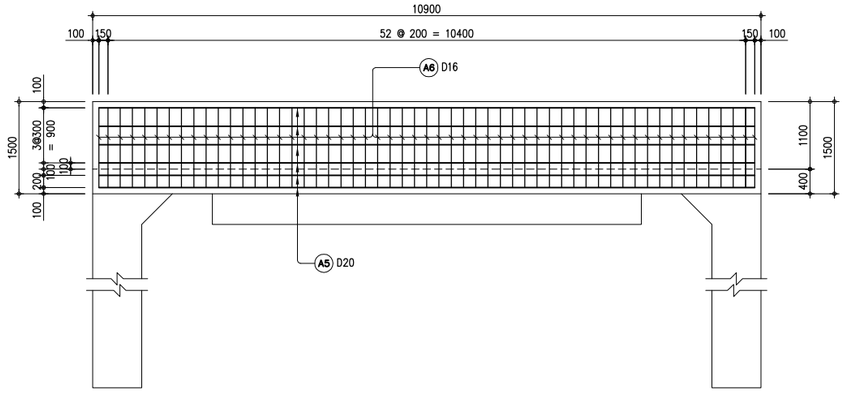

THE DEMOCRATIC SOCIALIST REPUBLIC OF SRI LANKA MINISTRY OF HIGHWAYS & ROAD DEVELOPMENT **Road Development Authority**	JICA JAPAN INTERNATIONAL COOPERATION AGENCY ORICONSUL ORIENTAL CONSULTANTS COMPANY LIMITED in association with PACIFIC CONSULTANTS INTERNATIONAL	No	REVISION	DATE	COLOMBO OUTER CIRCULAR HIGHWAY PROJECT (NORTHERN SECTION 1) OVERPASS BRIDGE NO. 8 REINFORCEMENT BAR ARRANGEMENT OF ABUTMENT A1 AND A2 (1/5)

DESIGNED BY:	
CHECKED BY:	
APPROVED BY:	
DWG. NO.	K02-18

REINFORCEMENT OF ABUTMENT A1 AND A2 (2) Scale 1:50

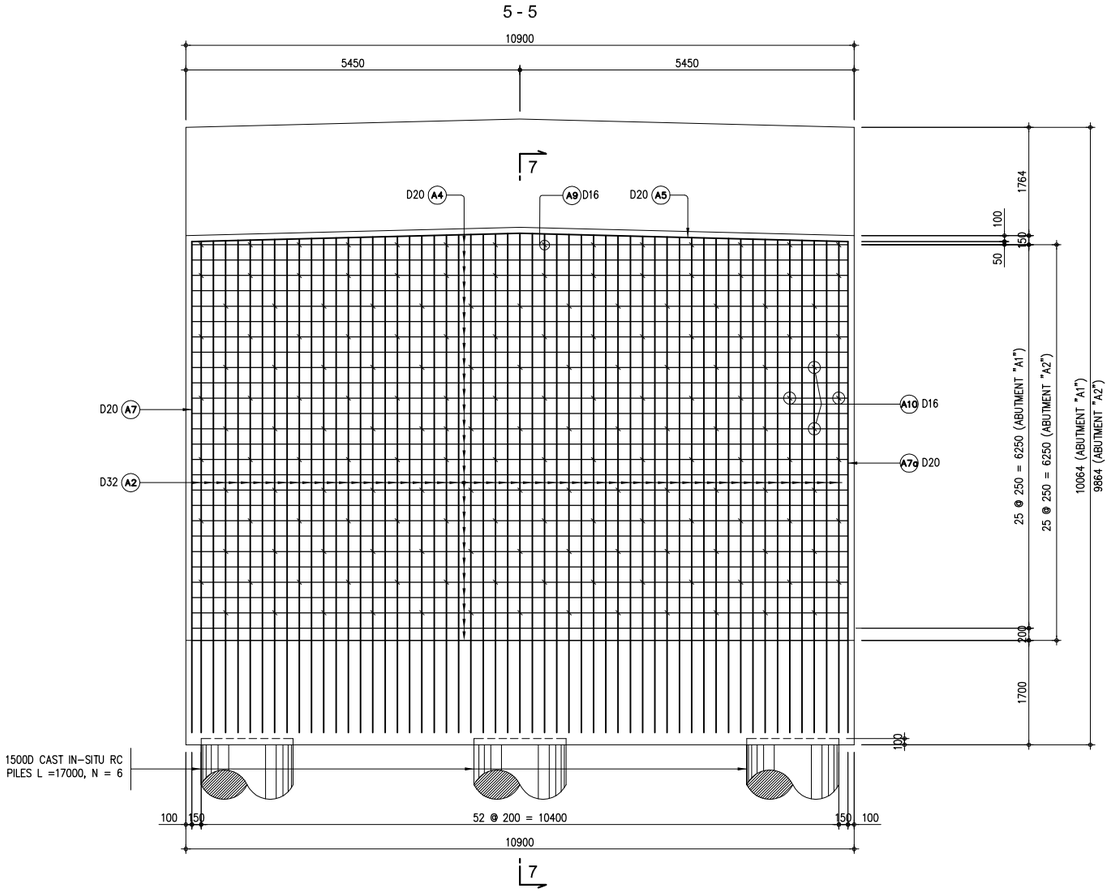

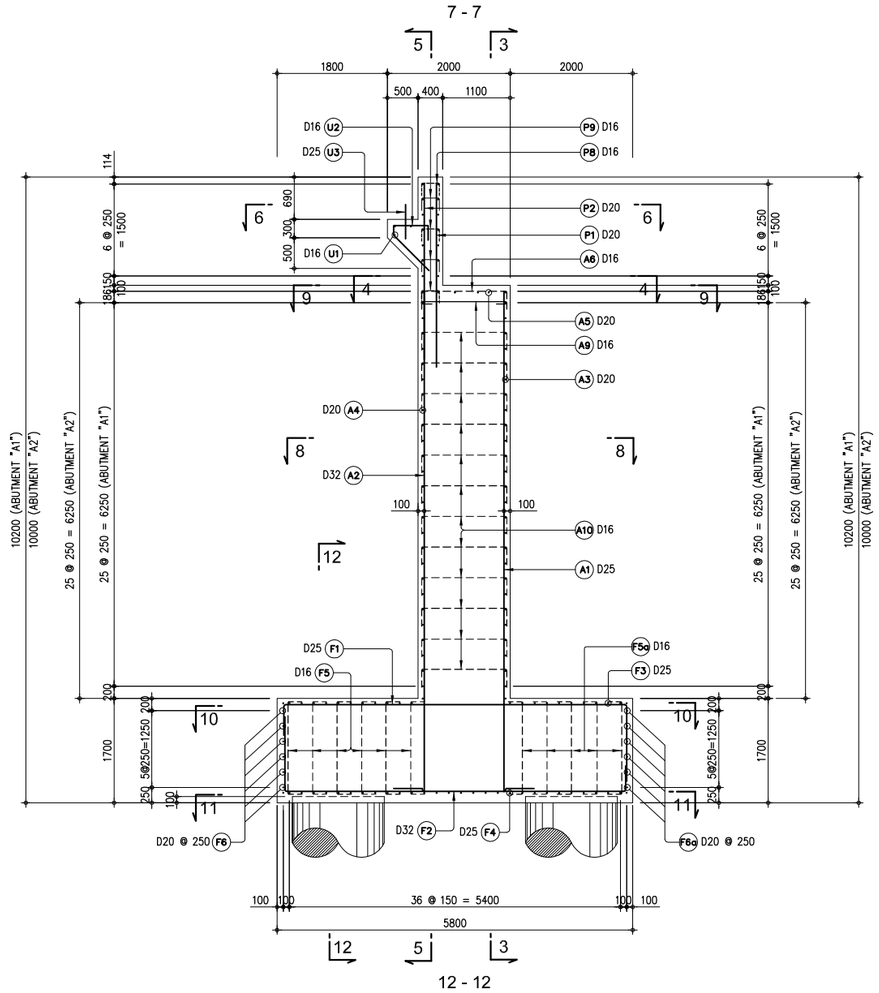

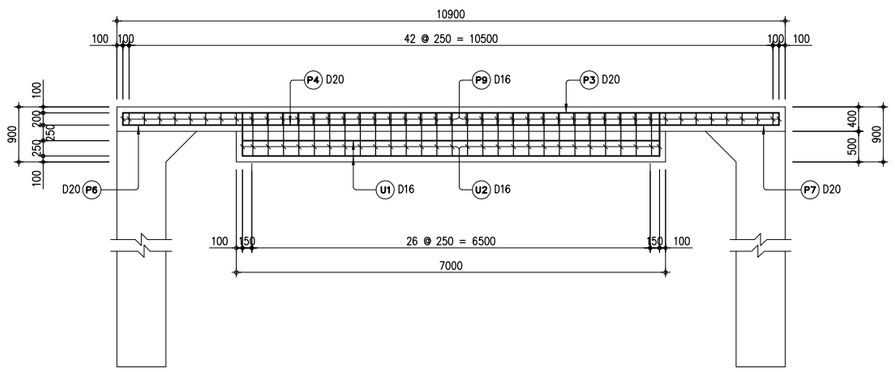

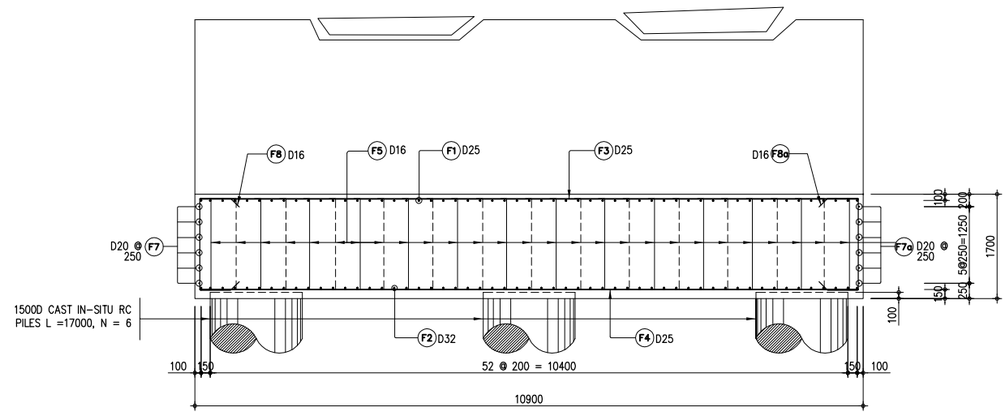

THE DEMOCRATIC SOCIALIST REPUBLIC OF SRI LANKA MINISTRY OF HIGHWAYS & ROAD DEVELOPMENT **Road Development Authority**	JICA JAPAN INTERNATIONAL COOPERATION AGENCY ORICONSUL ORIENTAL CONSULTANTS COMPANY LIMITED in association with PACIFIC CONSULTANTS INTERNATIONAL	No / REVISION / DATE	COLOMBO OUTER CIRCULAR HIGHWAY PROJECT (NORTHERN SECTION 1) OVERPASS BRIDGE NO. 8 REINFORCEMENT BAR ARRANGEMENT OF ABUTMENT A1 AND A2 (2/5)	DESIGNED BY: CHECKED BY: APPROVED BY: DWG. NO.	K02-19

REINFORCEMENT OF ABUTMENT A1 & A2 (3) Scale 1:50

8 - 8

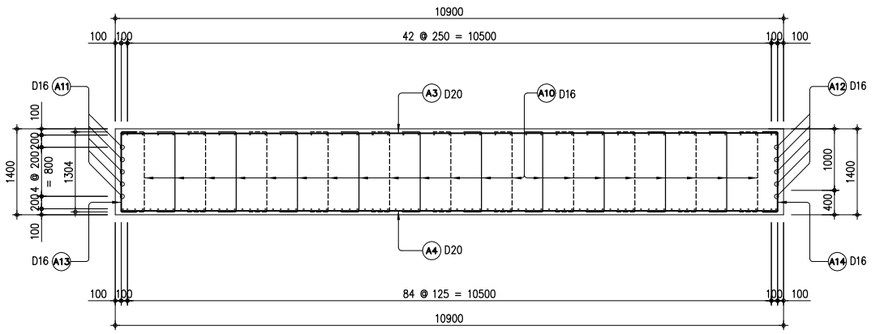

9 - 9

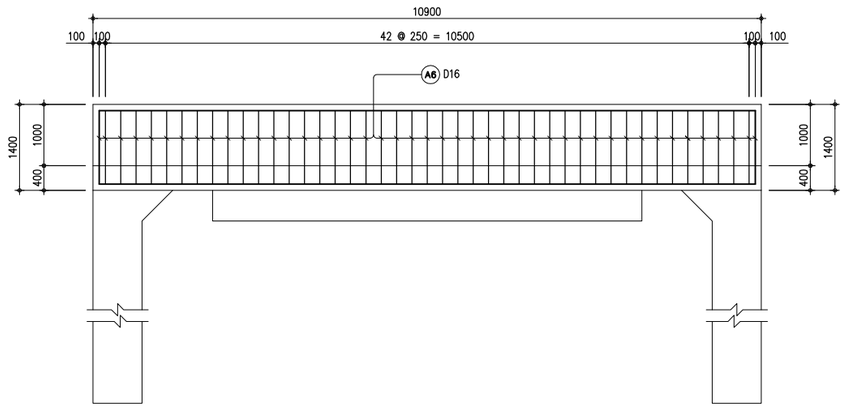

10 - 10

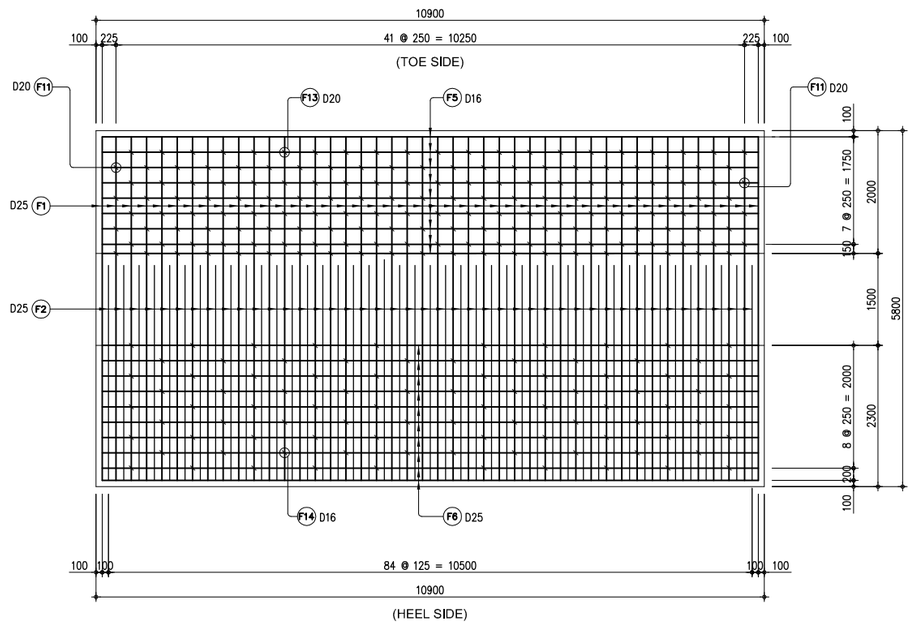

11 - 11

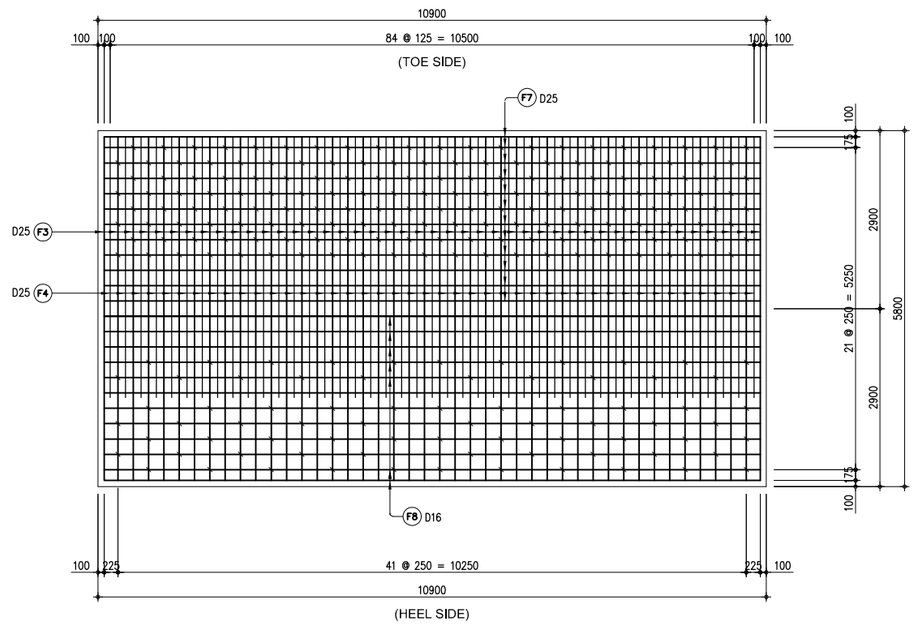

THE DEMOCRATIC SOCIALIST REPUBLIC OF SRI LANKA MINISTRY OF HIGHWAYS & ROAD DEVELOPMENT **Road Development Authority**	JICA JAPAN INTERNATIONAL COOPERATION AGENCY ORICONSUL ORIENTAL CONSULTANTS COMPANY LIMITED in association with PACIFIC CONSULTANTS INTERNATIONAL	No / REVISION / DATE	COLOMBO OUTER CIRCULAR HIGHWAY PROJECT (NORTHERN SECTION 1) OVERPASS BRIDGE NO. 8 REINFORCEMENT BAR ARRANGEMENT OF ABUTMENT A1 AND A2 (3/5)	DESIGNED BY: CHECKED BY: APPROVED BY: DWG. NO.	K02-20

REINFORCEMENT OF ABUTMENT A1 (4) Scale 1:50

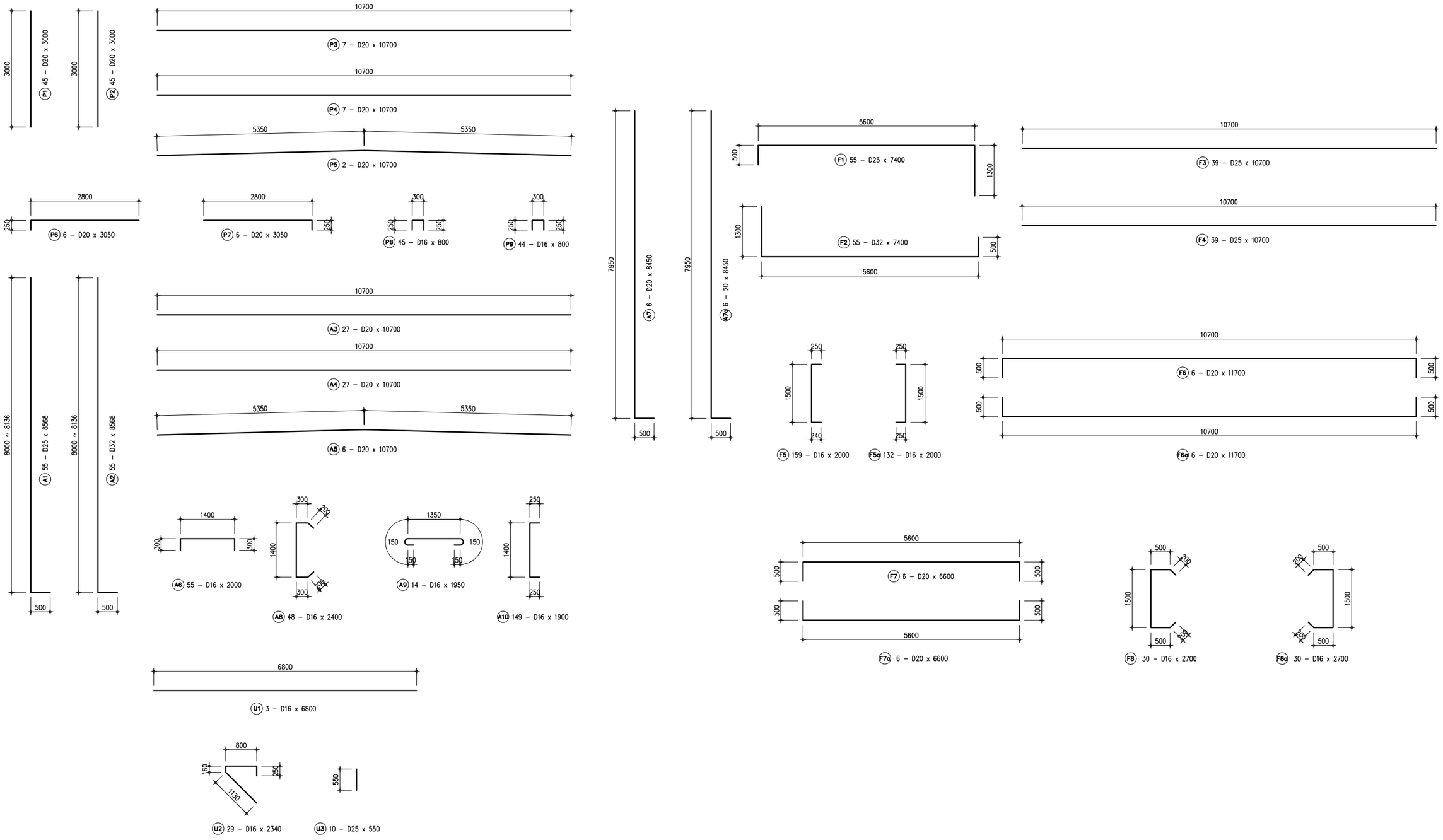

THE DEMOCRATIC SOCIALIST REPUBLIC OF SRI LANKA
MINISTRY OF HIGHWAYS & ROAD DEVELOPMENT
Road Development Authority

JAPAN INTERNATIONAL COOPERATION AGENCY
ORIENTAL CONSULTANTS COMPANY LIMITED
in association with
PACIFIC CONSULTANTS INTERNATIONAL

No	REVISION	DATE

COLOMBO OUTER CIRCULAR HIGHWAY PROJECT
(NORTHERN SECTION 1)

OVERPASS BRIDGE NO. 8
REINFORCEMENT BAR ARRANGMENT OF ABUTMENT A1 (4/5)

DESIGNED BY:	
CHECKED BY:	
APPROVED BY:	
DWG. NO.	K02-21

REINFORCEMENT OF ABUTMENT A2 (5) Scale 1:50

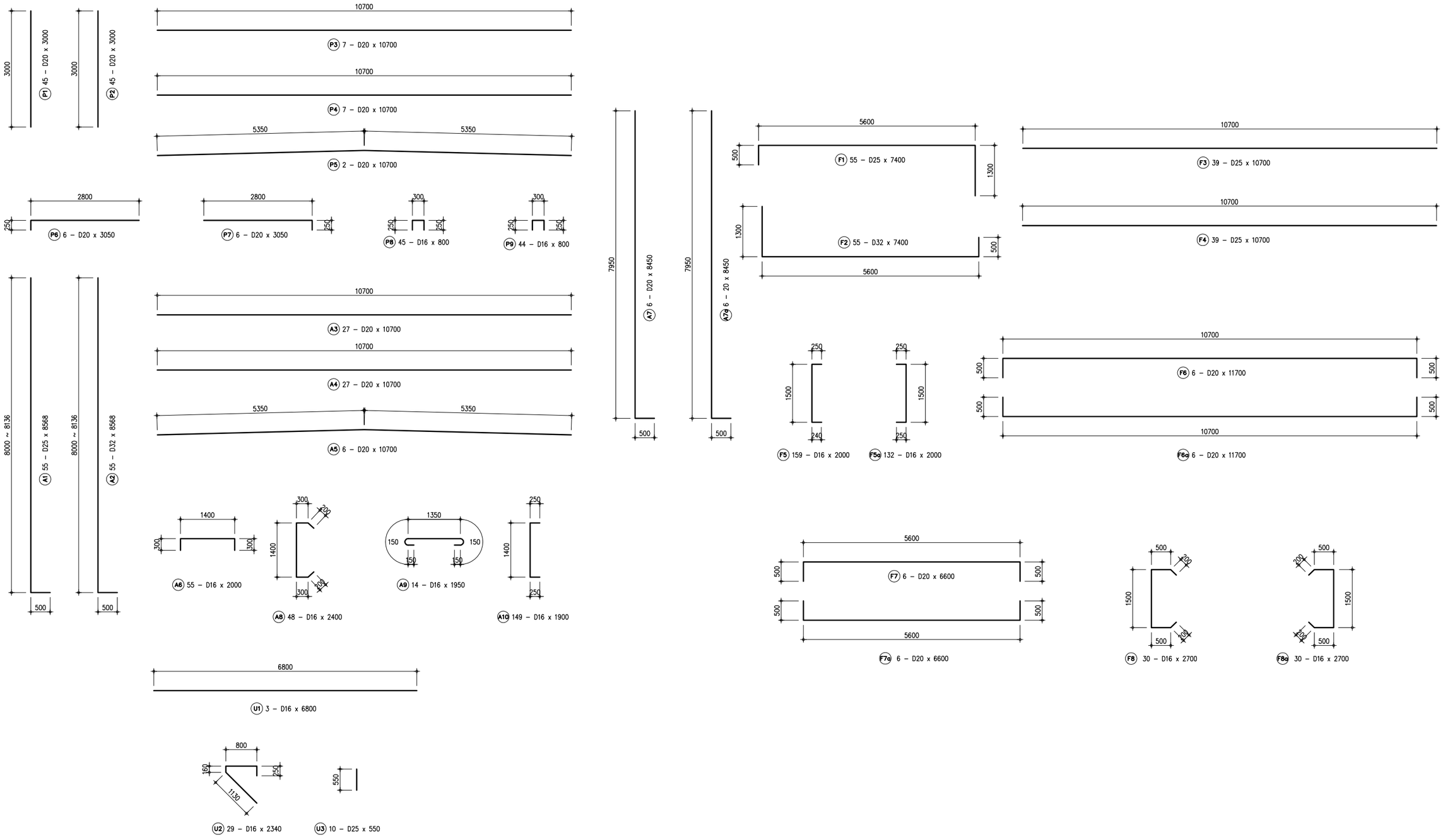

THE DEMOCRATIC SOCIALIST REPUBLIC OF SRI LANKA
MINISTRY OF HIGHWAYS & ROAD DEVELOPMENT
Road Development Authority

JAPAN INTERNATIONAL COOPERATION AGENCY
ORIENTAL CONSULTANTS COMPANY LIMITED
in association with
PACIFIC CONSULTANTS INTERNATIONAL

No	REVISION	DATE

COLOMBO OUTER CIRCULAR HIGHWAY PROJECT
(NORTHERN SECTION 1)

OVERPASS BRIDGE NO. 8
REINFORCEMENT BAR ARRANGEMENT OF ABUTMENT A2 (5/5)

DESIGNED BY:	
CHECKED BY:	
APPROVED BY:	
DWG. NO.	K02-22

REINFORCEMENT OF WINGWALL ABUTMENT A1 Scale 1:50

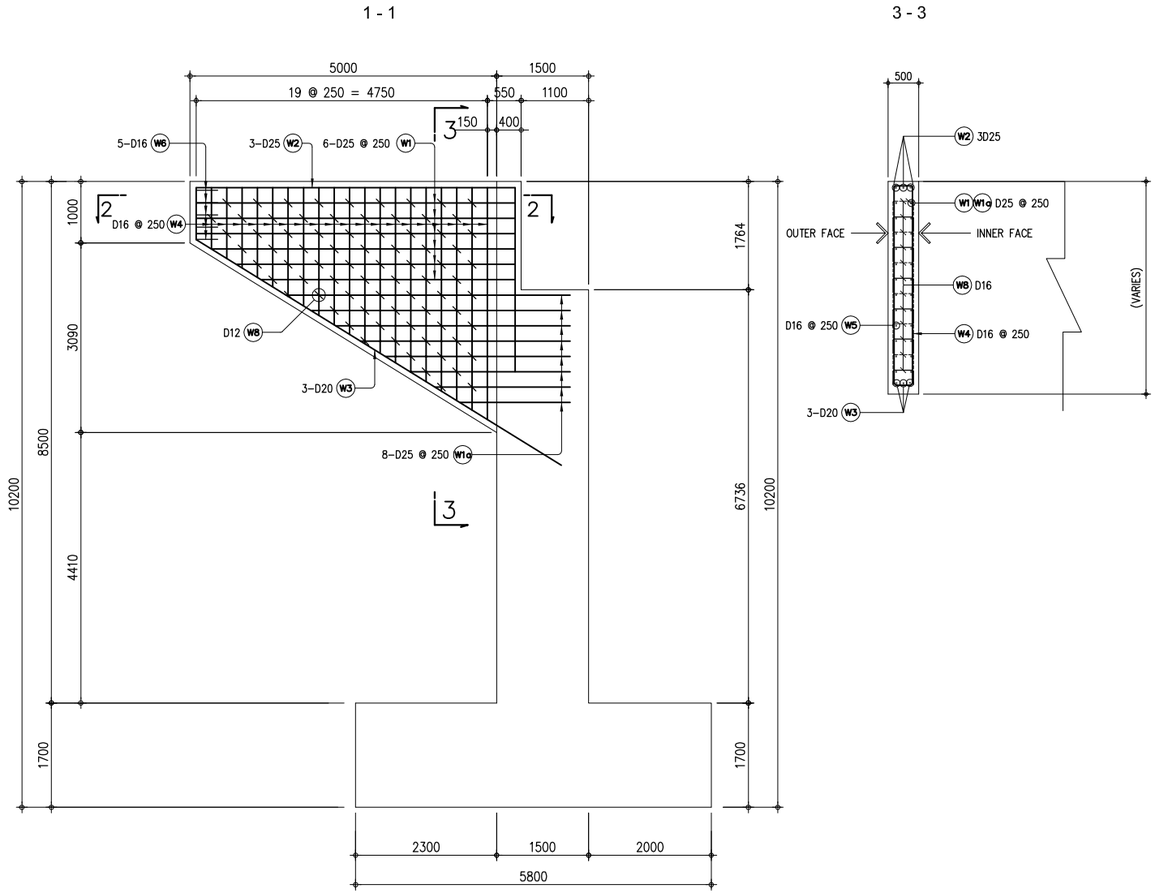

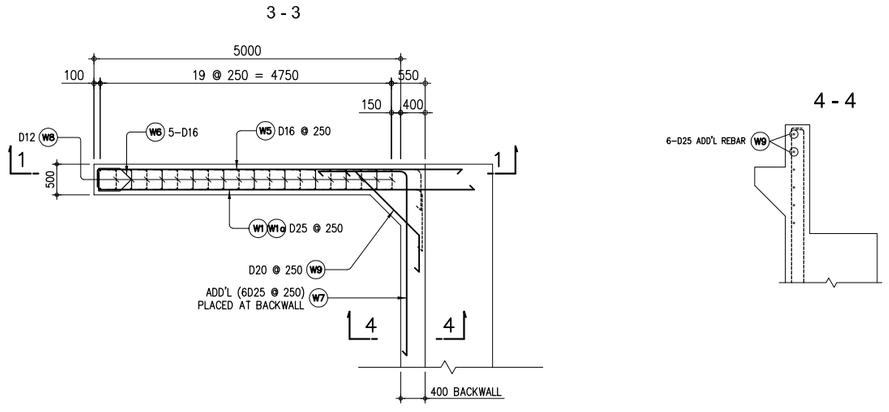

A REBAR DETAIL OF WINGWALL ABUTMENT A1
SCALE 1:50

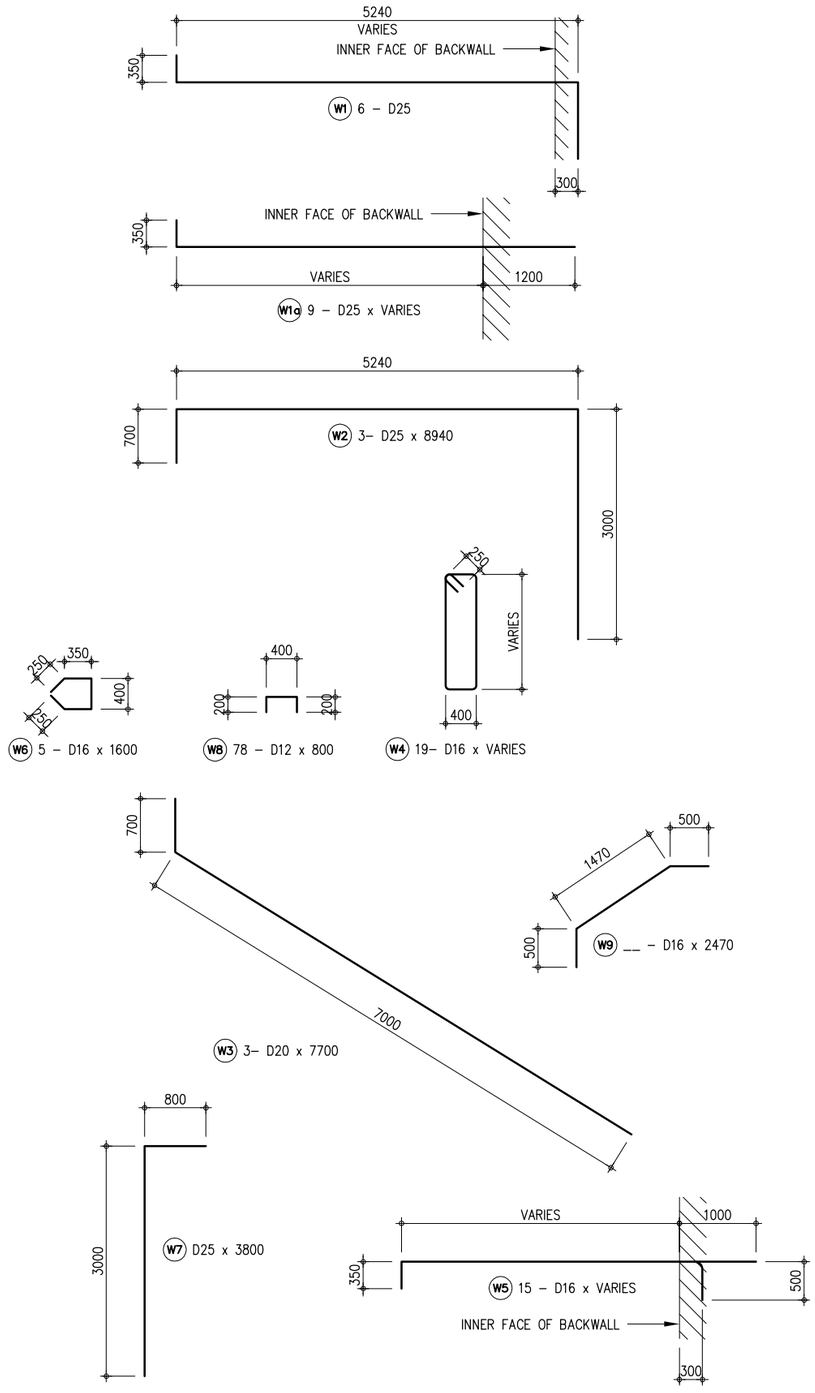

B BAR BENDING DIAGRAM
SCALE 1:50

THE DEMOCRATIC SOCIALIST REPUBLIC OF SRI LANKA
MINISTRY OF HIGHWAYS & ROAD DEVELOPMENT
Road Development Authority

JAPAN INTERNATIONAL COOPERATION AGENCY
ORIENTAL CONSULTANTS COMPANY LIMITED
in association with
PACIFIC CONSULTANTS INTERNATIONAL

No	REVISION	DATE

COLOMBO OUTER CIRCULAR HIGHWAY PROJECT
(NORTHERN SECTION 1)

OVERPASS BRIDGE NO. 8
REINFORCEMENT AND BAR BENDING OF WINGWALL (ABUT A-1)

DESIGNED BY:	
CHECKED BY:	
APPROVED BY:	
DWG. NO.	K02-23

REINFORCEMENT OF WINGWALL ABUTMENT A2 Scale 1:50

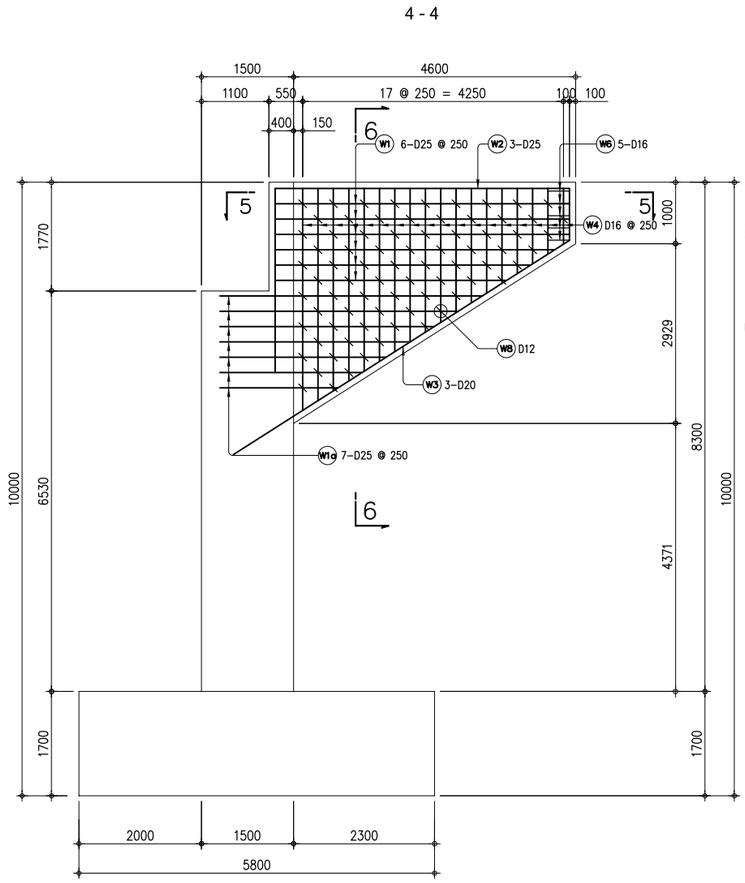

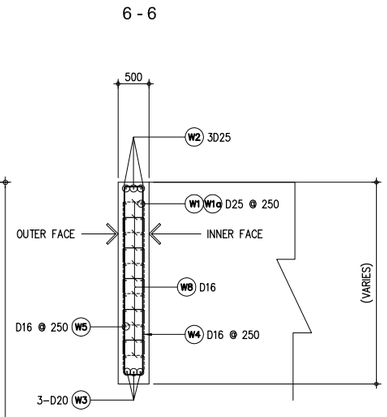

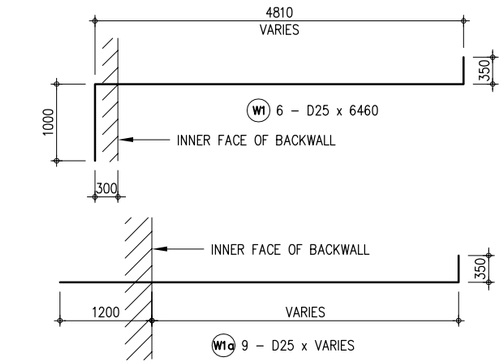

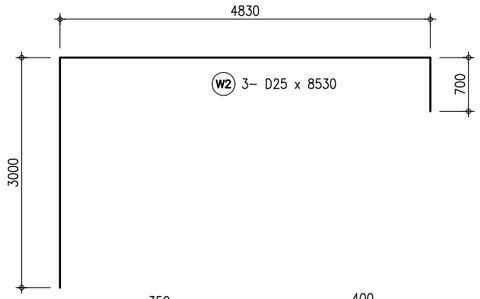

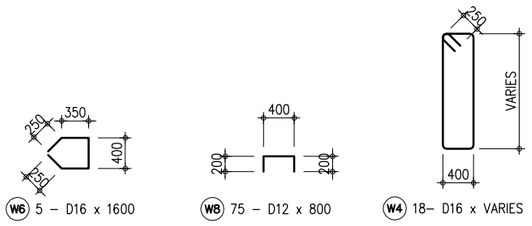

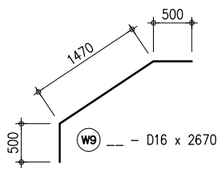

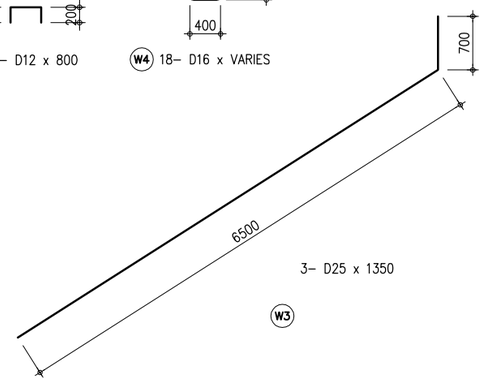

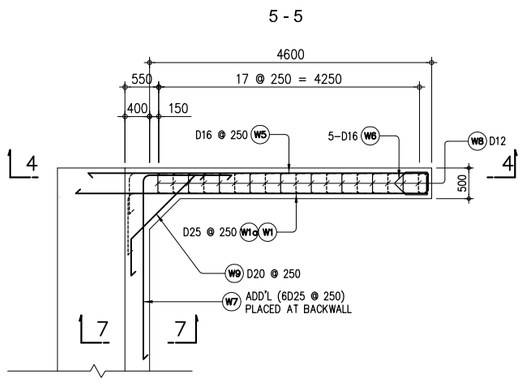

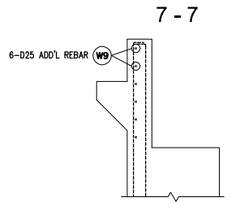

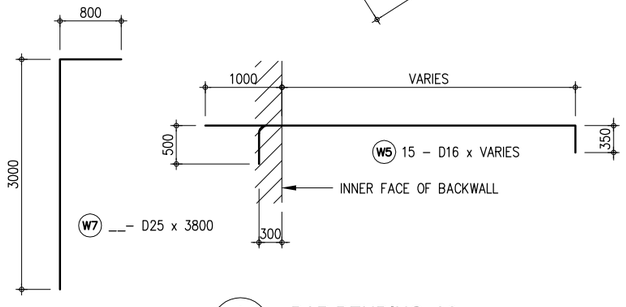

A – REBAR DETAIL OF WINGWALL ABUTMENT A2
SCALE 1:50

A – BAR BENDING A2
SCALE 1:50

THE DEMOCRATIC SOCIALIST REPUBLIC OF SRI LANKA
MINISTRY OF HIGHWAYS & ROAD DEVELOPMENT
Road Development Authority

JICA JAPAN INTERNATIONAL COOPERATION AGENCY
ORIENTAL CONSULTANTS COMPANY LIMITED
in association with
PACIFIC CONSULTANTS INTERNATIONAL

No	REVISION	DATE

COLOMBO OUTER CIRCULAR HIGHWAY PROJECT
(NORTHERN SECTION 1)

OVERPASS BRIDGE NO. 8
REINFORCEMENT AND BAR BENDING OF WINGWALL (ABUT A-2)

DESIGNED BY:
CHECKED BY:
APPROVED BY:
DWG. NO. K02-24

ESTIMATED QUANTITIES FOR ABUTMENT A1 AND A2

ESTIMATED QUANTITIES FOR ABUTMENT A1

REINFORCING BARS

LOCATION	BAR MARK	SPACING	QTY. (pcs)	SIZE (mm)	DIMENSION mm (OUT TO OUT) a	b	c	d	e	f	g	LENGTH PER BAR (mm)	TOTAL LENGTH (m)	UNIT WEIGHT (kg/m)	TOTAL WEIGHT (kg)	CONCRETE VOLUME (m^3)
PARAPET	P1	AS SHOWN	45	20	3000							3000	135.00	2.466	332.91	
	P2	AS SHOWN	45	20	3000							3000	135.00	2.466	332.91	
	P3	AS SHOWN	7	20	10700							10700	74.90	2.466	184.70	
	P4	AS SHOWN	7	20	10700							10700	74.90	2.466	184.70	
	P5	AS SHOWN	2	20	5350	5350						10700	21.40	2.466	52.77	
	P6	AS SHOWN	6	20	250	2800						3050	18.30	2.466	45.13	
	P7	AS SHOWN	6	20	2800	250						3050	18.30	2.466	45.13	
	P8	AS SHOWN	45	16	250	300	250					800	36.00	1.579	56.84	
	P9	AS SHOWN	44	16	250	300	250					800	35.20	1.579	55.58	
	U1	AS SHOWN	3	16	6800							6800	20.40	1.579	32.21	
	U2	AS SHOWN	29	25	1130	160	800	250				2340	67.86	3.854	261.53	
	U3	AS SHOWN	10	25	550							550	5.50	3.854	21.20	
												SUB-TOTAL QUANTITY FOR PARAPET			**1,605.62**	**9.616**
STEM	A1	AS SHOWN	55	25	500	8068						8568	471.24	3.854	1,816.16	
	A2	AS SHOWN	55	32	500	8068						8568	471.24	6.313	2,974.94	
	A3	AS SHOWN	27	20	10700							10700	288.90	2.466	712.43	
	A4	AS SHOWN	27	20	10700							10700	288.90	2.466	712.43	
	A5	AS SHOWN	6	20	5350	5350						10700	64.20	2.466	158.32	
	A6	AS SHOWN	55	16	300	1400	300					2000	110.00	1.579	173.69	
	A7	AS SHOWN	6	20	500	7950						8450	50.70	2.466	125.03	
	A7a	AS SHOWN	6	20	500	7950						8450	50.70	2.466	125.03	
	A8	AS SHOWN	48	16	200	300	1400	300	200			2400	115.20	1.579	181.90	
	A9	AS SHOWN	14	16	150	150	1350	150	150			1950	27.30	1.579	43.11	
	A10	AS SHOWN	149	16	250	1400	250					1900	283.10	1.579	447.01	
												SUB-TOTAL QUANTITY FOR STEM			**7,470.03**	**105.381**
FOOTING	F1	AS SHOWN	55	25	500	5600	1300					7400	407.00	3.854	1,568.58	
	F2	AS SHOWN	55	25	1300	5600	500					7400	407.00	3.854	1,568.58	
	F3	AS SHOWN	39	25	10700							10700	417.30	3.854	1,608.27	
	F4	AS SHOWN	39	25	10700							10700	417.30	3.854	1,608.27	
	F5	AS SHOWN	159	16	250	1500	250					2000	318.00	1.579	502.12	
	F5a	AS SHOWN	132	16	250	1500	250					2000	264.00	1.579	416.86	
	F6	AS SHOWN	6	20	500	10700	500					11700	70.20	2.466	173.11	
	F6a	AS SHOWN	6	20	500	10700	500					11700	70.20	2.466	173.11	
	F7	AS SHOWN	6	20	500	5600	500					6600	39.60	2.466	97.65	
	F7a	AS SHOWN	6	20	500	5600	500					6600	39.60	2.466	97.65	
	F8	AS SHOWN	30	16	200	500	1500	500	200			2900	87.00	1.579	137.37	
	F8a	AS SHOWN	30	16	200	500	1500	500	200			2900	87.00	1.579	137.37	
												SUB-TOTAL QUANTITY FOR FOOTING			**8,088.96**	**107.474**
WINGWALL (X2)	W1	AS SHOWN	12	25	240	4560	1000					5800	69.60	3.854	268.24	
	W1a	AS SHOWN	16	25	350	2955						3305	52.88	3.854	203.80	
	W2	AS SHOWN	6	25	700	4830	3000					8530	51.18	3.854	197.25	
	W3	AS SHOWN	6	25	700	6500						7200	43.20	3.854	166.49	
	W4	AS SHOWN	36	16	250	400	2365	400	2365	250		6030	217.08	1.579	342.77	
	W5	AS SHOWN	28	16	350	3658						4008	112.22	1.579	177.20	
	W6	AS SHOWN	10	16	250	350	400	350	250			1600	16.00	1.579	25.26	
	W7	AS SHOWN	12	25	800	3000						3800	45.60	3.854	175.74	
	W8	AS SHOWN	150	12	200	400	200					800	120.00	0.888	106.56	
	W9	AS SHOWN	28	20	500	1470	500					2470	69.16	2.466	18,998.48	
												SUB-TOTAL QUANTITY WINGWALL			**170.55**	**26.135**
												GRAND TOTAL FOR ABUTMENT A1			**1,833.86**	**248.607**

ESTIMATED QUANTITIES FOR ABUTMENT A2

REINFORCING BARS

LOCATION	BAR MARK	SPACING	QTY. (pcs)	SIZE (mm)	DIMENSION mm (OUT TO OUT) a	b	c	d	e	f	g	LENGTH PER BAR (mm)	TOTAL LENGTH (m)	UNIT WEIGHT (kg/m)	TOTAL WEIGHT (kg)	CONCRETE VOLUME (m^3)
PARAPET	P1	250	45	20	3000							3000	135.00	2.466	332.91	
	P2	250	45	20	3000							3000	135.00	2.466	332.91	
	P3	250	7	20	10700							10700	74.90	2.466	184.70	
	P4	250	7	20	10700							10700	74.90	2.466	184.70	
	P5	200	2	20	5350	5350						10700	21.40	2.466	52.77	
	P6	250	6	20	250	2800						3050	18.30	2.466	45.13	
	P7	250	6	20	2800	250						3050	18.30	2.466	45.13	
	P8	250	45	16	250	300	250					800	36.00	1.579	56.84	
	P9	500	44	16	250	300	250					800	35.20	1.579	55.58	
	U1		3	16	6800							6800	20.40	1.579	32.21	
	U2	250	29	25	1130	160	800	250				2340	67.86	3.854	261.53	
	U3	750	10	25	550							550	5.50	3.854	21.20	
												SUB-TOTAL QUANTITY FOR PARAPET			**1,605.62**	**9.616**
STEM	A1	200	55	25	500	8068						8568	471.24	3.854	1,816.16	
	A2	200	55	32	500	8068						8568	471.24	6.313	2,974.94	
	A3	250	27	20	10700							10700	288.90	2.466	712.43	
	A4	250	27	20	10700							10700	288.90	2.466	712.43	
	A5	200	6	20	5350	5350						10700	64.20	2.466	158.32	
	A6	200	55	16	300	1400	300					2000	110.00	1.579	173.69	
	A7	250	6	20	500	7950						8450	50.70	2.466	125.03	
	A7a	250	6	20	500	7950						8450	50.70	2.466	125.03	
	A8	250	48	16	200	300	1400	300	200			2400	115.20	1.579	181.90	
	A9	800	14	16	150	150	1350	150	150			1950	27.30	1.579	43.11	
	A10	400	149	16	250	1400	250					1900	283.10	1.579	447.01	
												SUB-TOTAL QUANTITY FOR STEM			**7,470.03**	**108.651**
FOOTING	F1	200	55	25	500	5600	1300					7400	407.00	3.854	1,568.58	
	F2	200	55	25	1300	5600	500					7400	407.00	3.854	1,568.58	
	F3	200	39	25	10700							10700	417.30	3.854	1,608.27	
	F4	200	39	25	10700							10700	417.30	3.854	1,608.27	
	F5	200	159	16	250	1500	250					2000	318.00	1.579	502.12	
	F5a	200	132	16	250	1500	250					2000	264.00	1.579	416.86	
	F6	250	6	20	500	10700	500					11700	70.20	2.466	173.11	
	F6a	250	6	20	500	10700	500					11700	70.20	2.466	173.11	
	F7	250	6	20	500	5600	500					6600	39.60	2.466	97.65	
	F7a	250	6	20	500	5600	500					6600	39.60	2.466	97.65	
	F8	200	30	16	200	500	1500	500	200			2900	87.00	1.579	137.37	
	F8a	200	30	16	200	500	1500	500	200			2900	87.00	1.579	137.37	
												SUB-TOTAL QUANTITY FOR FOOTING			**8,088.96**	**107.474**
WINGWALL (X2)	W1	250	12	25	350	4990	1000					6340	76.08	3.854	293.21	
	W1a	250	18	25	350	3170						3520	63.36	3.854	244.19	
	W2	150	6	25	700	5240	3000					8940	53.64	3.854	206.73	
	W3	150	6	20	700	7000						7700	46.20	2.466	113.93	
	W4	250	38	16	250	400	2445	400	2445	250		6190	235.22	1.579	371.41	
	W5	250	30	16	350	3980						4330	129.90	1.579	205.11	
	W6	250	10	16	240	5200						5440	54.40	1.579	85.90	
	W7	300	12	25	800	3000						3800	45.60	3.854	175.74	
	W8	250	156	12	200	400	200					800	124.80	0.888	110.82	
	W9		30	16	500	1470	500					2470	74.10	1.579	117.00	
												SUB-TOTAL QUANTITY WINGWALL			**1,924.05**	**27.603**
												GRAND TOTAL FOR ABUTMENT A1			**19,088.67**	**253.344**

REINFORCEMENT BAR ARRANGEMENT OF PIER P1 (1) Scale 1:50

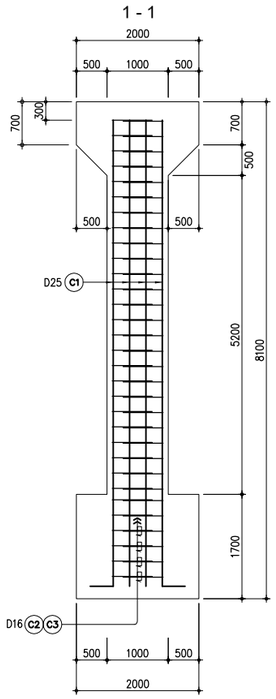

1 - 1 SECTION
SCALE 1:50

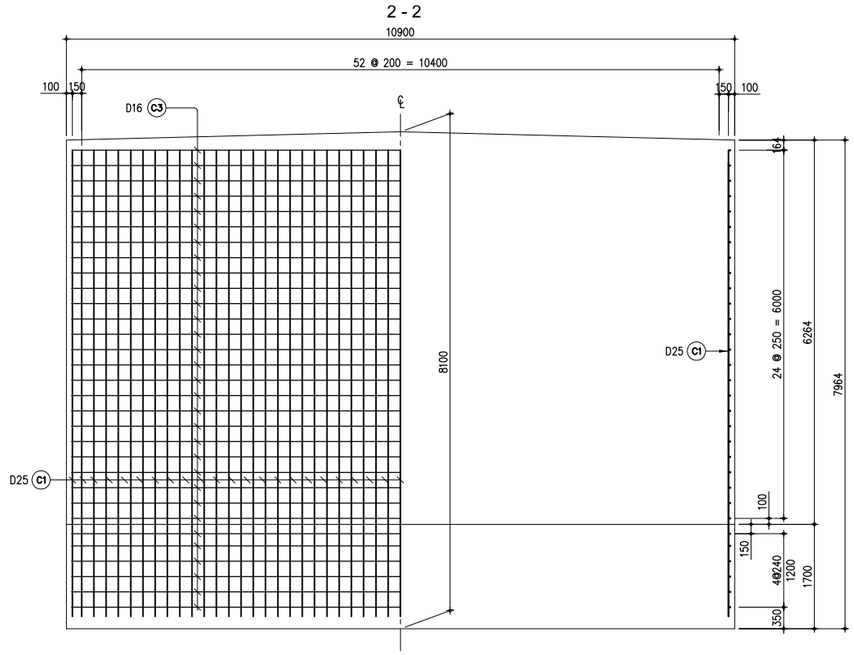

2 - 2 SECTIONAL ELEVATION
SCALE 1:50

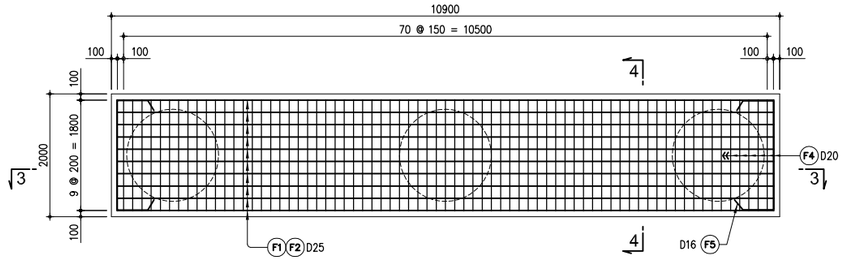

B REINFORCEMENT PLAN (PILE CAP)
SCALE 1:50

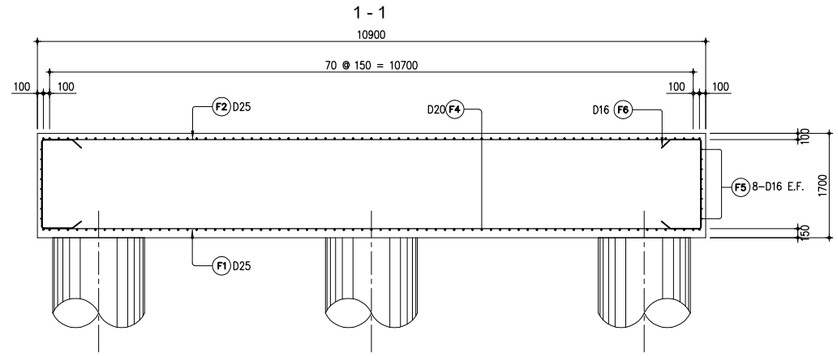

3 - 3 SECTIONAL ELEVATION (PILE CAP)
SCALE 1:50

A REINFORCEMENT PLAN
SCALE 1:50

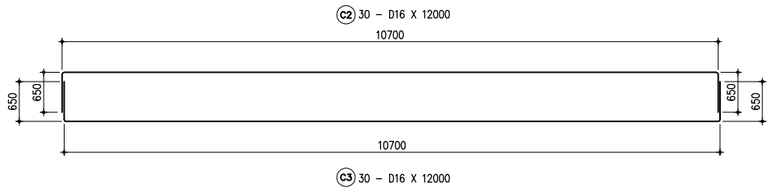

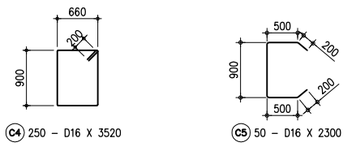

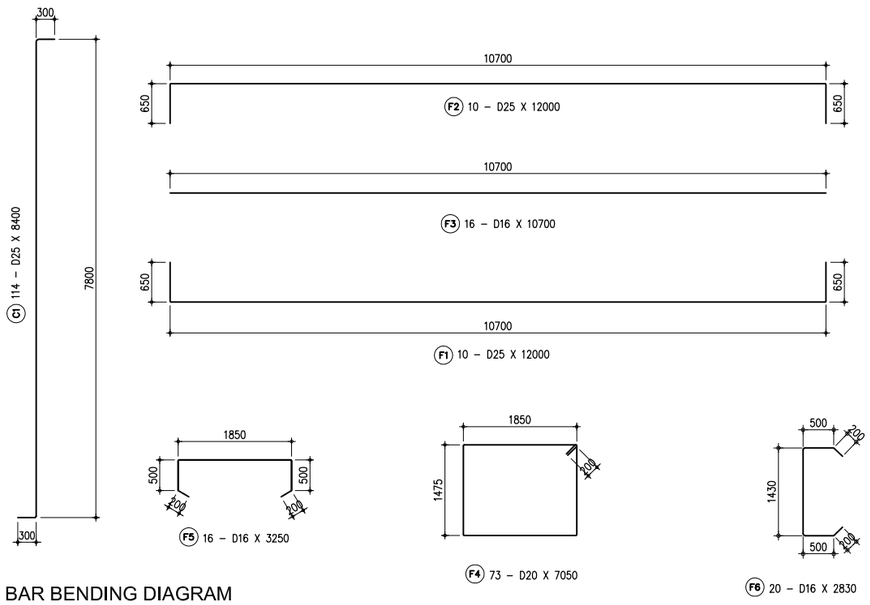

C BAR BENDING DIAGRAM
SCALE NTS

4 - 4

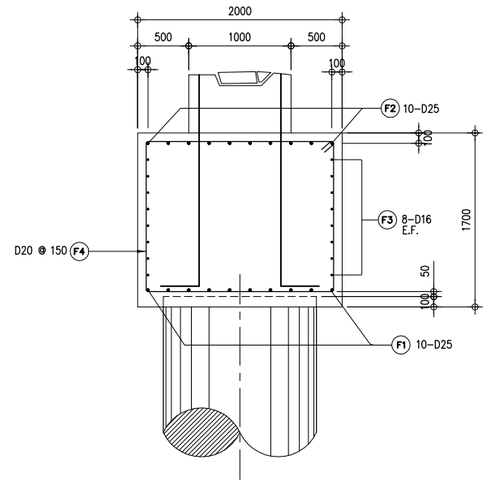

4 - 4 SECTION
SCALE 1:30

THE DEMOCRATIC SOCIALIST REPUBLIC OF SRI LANKA
MINISTRY OF HIGHWAYS & ROAD DEVELOPMENT
Road Development Authority

JICA JAPAN INTERNATIONAL COOPERATION AGENCY
ORICONSUL ORIENTAL CONSULTANTS COMPANY LIMITED
in association with
PACIFIC CONSULTANTS INTERNATIONAL

No	REVISION	DATE

COLOMBO OUTER CIRCULAR HIGHWAY PROJECT
(NORTHERN SECTION 1)

OVERPASS BRIDGE NO. 8
REINFORCEMENT BAR ARRANGEMENT OF PIER P1 (1/2)

DESIGNED BY:	
CHECKED BY:	
APPROVED BY:	
DWG. NO.	K02-26

REINFORCEMENT BAR ARRANGEMENT OF PIER P1 (2) Scale 1:50

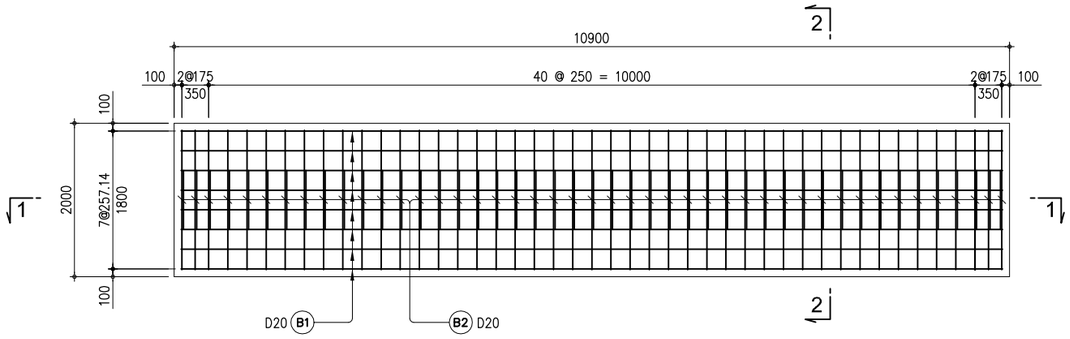

A REINFORCEMENT PLAN
SCALE 1:50

1 - 1

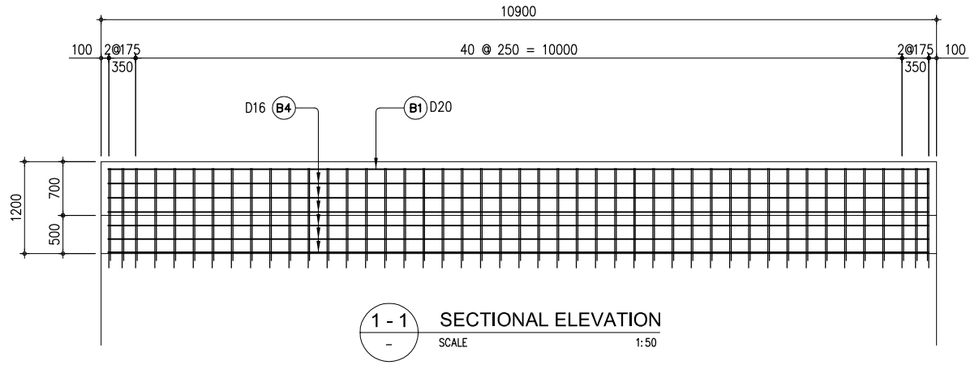

1 - 1 SECTIONAL ELEVATION
SCALE 1:50

2 - 2

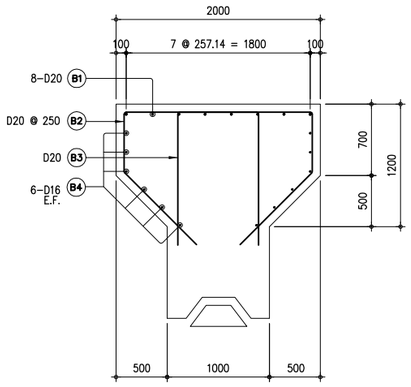

2 - 2 SECTION
SCALE 1:30

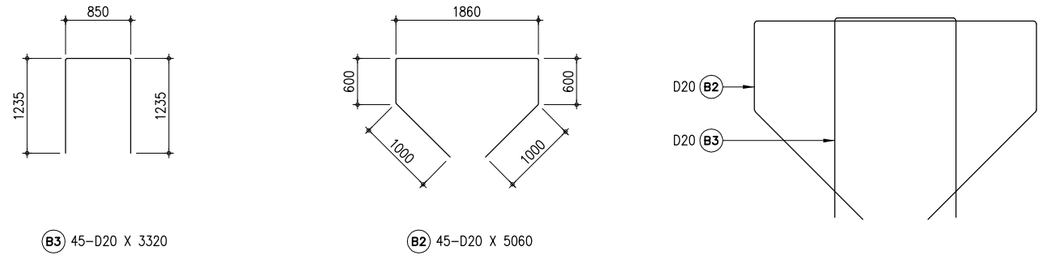

B3 45-D20 X 3320

B2 45-D20 X 5060

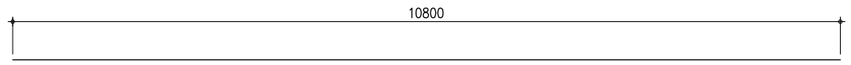

B1 8-D20 X 10800

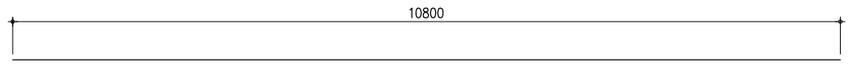

B4 12-D16 X 10800

B BAR BENDING DIAGRAM
SCALE NTS

OVERPASS BRIDGE NO.8 QUANTITIES OF REINFORCING BAR AND DIAGRAMS FOR PIER

LOCATION	BAR MARK	SPACING	QTY. (pcs)	SIZE (mm)	DIMENSION mm (OUT TO OUT) a	b	c	d	e	f	LENGTH PER BAR (mm)	TOTAL LENGTH (m)	UNIT WEIGHT (kg/m)	TOTAL WEIGHT (kg)	CONCRETE VOLUME (m^3)
COLUMN	B1	AS SHOWN	8	20	10800						10800	86.40	2.466	213.06	
	B2	AS SHOWN	45	20	1000	600	1860	600	1000		5060	227.70	2.466	561.51	
	B3	AS SHOWN	45	20	1235	850	1235				3320	149.40	2.466	368.42	
	B4	AS SHOWN	12	16	10800						10800	129.60	1.579	204.64	
	C1	AS SHOWN	114	25	300	7800	300				8400	957.60	3.854	3,690.59	
	C2	AS SHOWN	30	16	650	10700	650				12000	360.00	1.579	568.44	
	C3	AS SHOWN	30	16	650	10700	650				12000	360.00	1.579	568.44	
	C4	AS SHOWN	250	16	200	660	900	660	900	200	3520	880.00	1.579	1,389.52	
	C5	AS SHOWN	50	16	200	500	900	500	200		2300	115.00	1.579	181.59	
	SUB-TOTAL QUANTITY FOR COLUMN													7,746.20	79.127
PILECAP	F1	AS SHOWN	10	25	650	10700	650				12000	120.00	3.854	462.48	
	F2	AS SHOWN	10	25	650	10700	650				12000	120.00	3.854	462.48	
	F3	AS SHOWN	16	16	10700						10700	171.20	1.579	270.32	
	F4	AS SHOWN	73	20	200	1850	1475	1850	1475	200	7050	514.65	2.466	1,269.13	
	F5	AS SHOWN	16	16	200	500	1850	500	200		3250	52.00	1.579	82.11	
	F6	AS SHOWN	16	16	200	500	1430	500	200		2830	45.28	1.579	71.50	
SUB-TOTAL QUANTITY FOR PILECAP														2,618.02	37.060
GRAND TOTAL QUANTITY FOR PIER														10,364.22	116.187

THE DEMOCRATIC SOCIALIST REPUBLIC OF SRI LANKA
MINISTRY OF HIGHWAYS & ROAD DEVELOPMENT
Road Development Authority

JICA JAPAN INTERNATIONAL COOPERATION AGENCY
ORIENTAL CONSULTANTS COMPANY LIMITED
in association with
PACIFIC CONSULTANTS INTERNATIONAL

No	REVISION	DATE

COLOMBO OUTER CIRCULAR HIGHWAY PROJECT
(NORTHERN SECTION 1)

OVERPASS BRIDGE NO. 8
REINFORCEMENT BAR ARRANGEMENT OF PIER P1 (2/2)

DESIGNED BY:
CHECKED BY:
APPROVED BY:
DWG. NO. K02-27

REINFORCEMENT OF APPROACH SLAB Scale 1:50

1 - 1

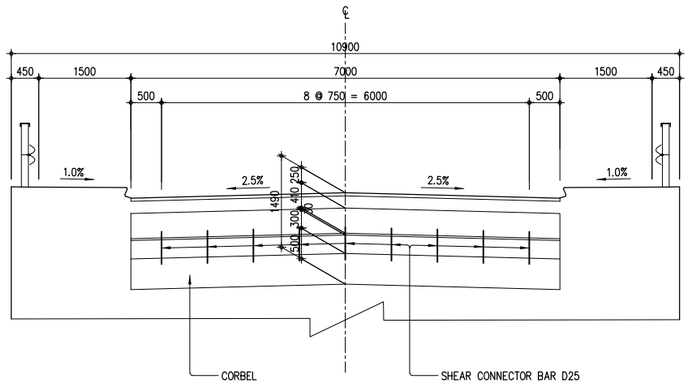

2 - 2

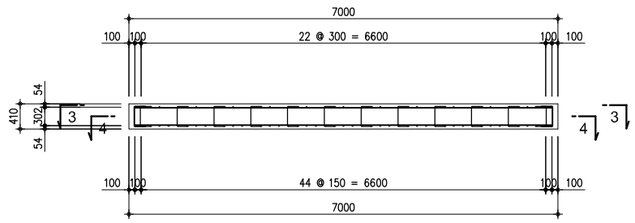

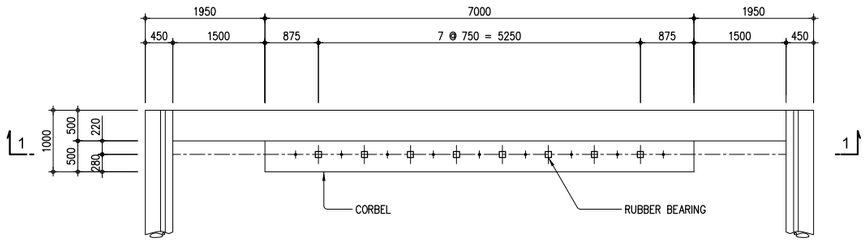

3 - 3 4 - 4

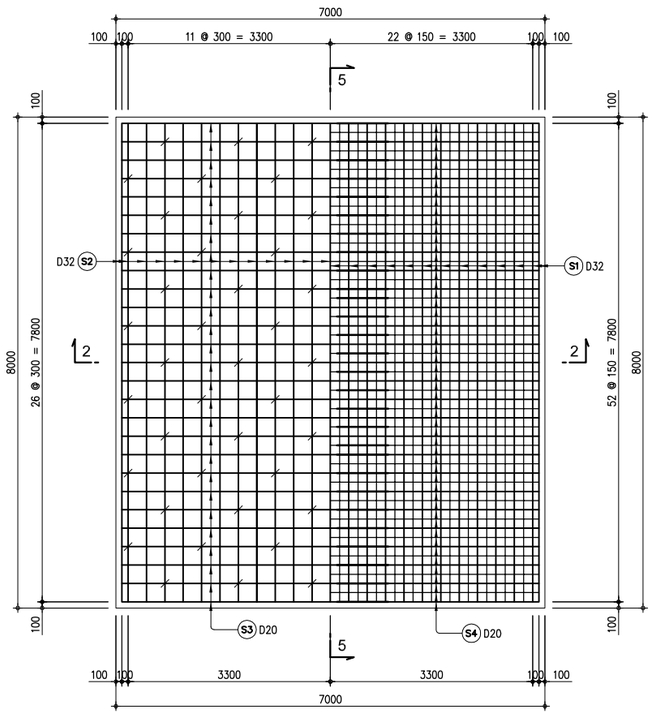

5 - 5

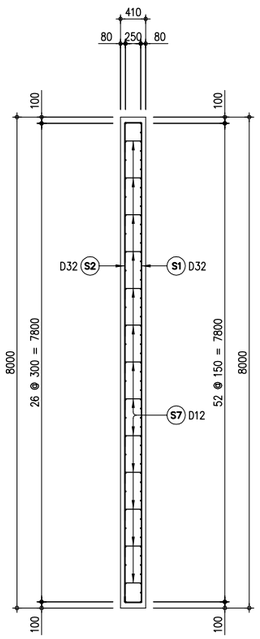

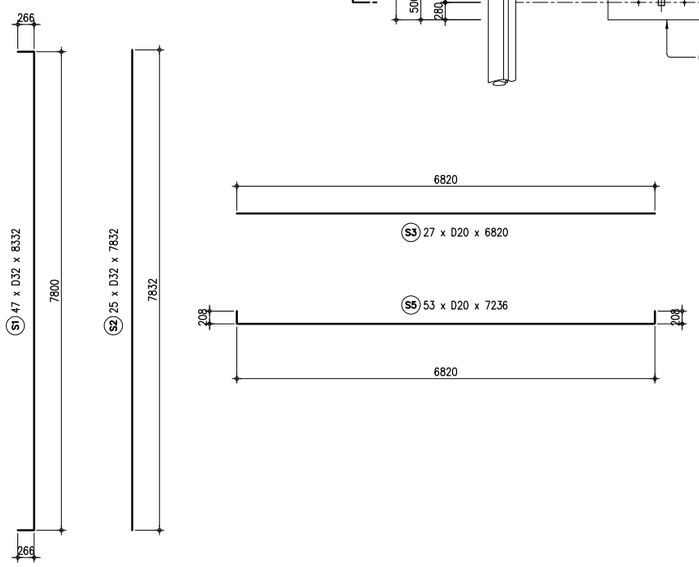

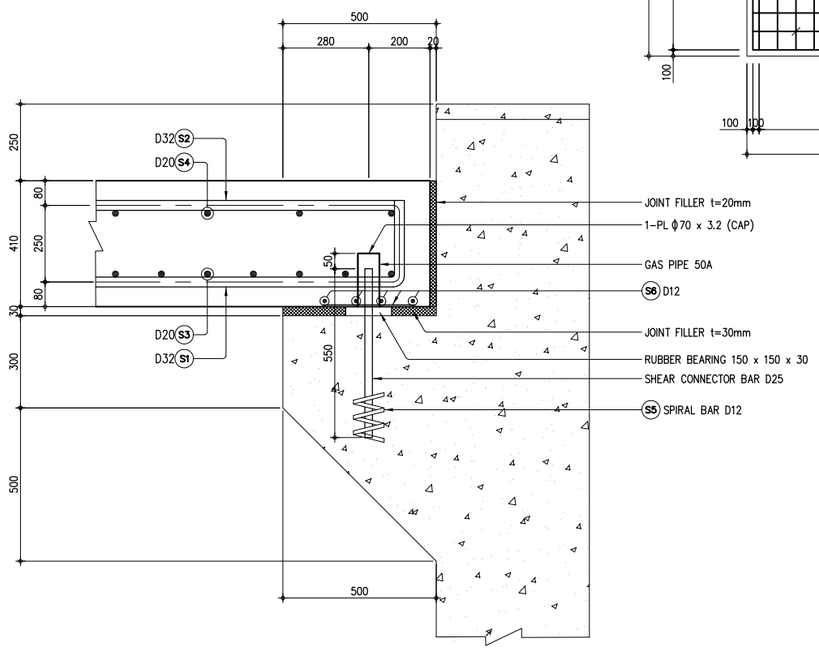

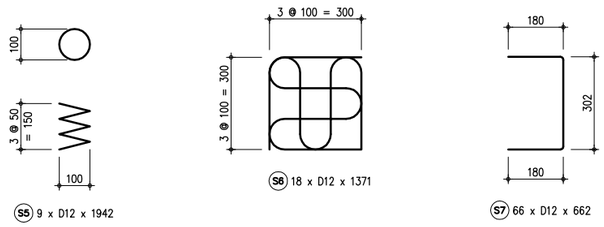

S5 9 x D12 x 1942

S6 18 x D12 x 1371

S7 66 x D12 x 662

REINFORCING BARS										
BAR BENDING	BAR MARK	BAR SHAPE	QTY.	SIZE	DIMENSIONS a	DIMENSIONS b	LENGTH PER BAR (mm)	TOTAL LENGTH (m)	UNIT WEIGHT (kg/m)	TOTAL WEIGHT (kg)
	S1	A	47	D32	7800	532	8332	391.60	6.314	2472.59
	S2	B	25	D32	7832	–	7832	195.80	6.314	1236.28
	S3	C	27	D20	6820	–	6820	184.14	2.466	454.09
	S4	A	53	D20	6820	416	7236	383.51	2.466	945.73
	S5	E	9	D12	1942	–	1942	17.48	0.888	15.52
	S6	F	18	D12	1371	–	1371	24.68	0.888	21.91
	S7	A	66	D12	302	360	662	43.69	0.888	38.80
									D32	3708.87
									D20	1399.82
									D12	76.23
									TOTAL	**5184.92**
	SGP	50A	–	–	–	–	–	–	–	GAS PIPE
	PL	G	–	–	–	–	–	–	–	CAP

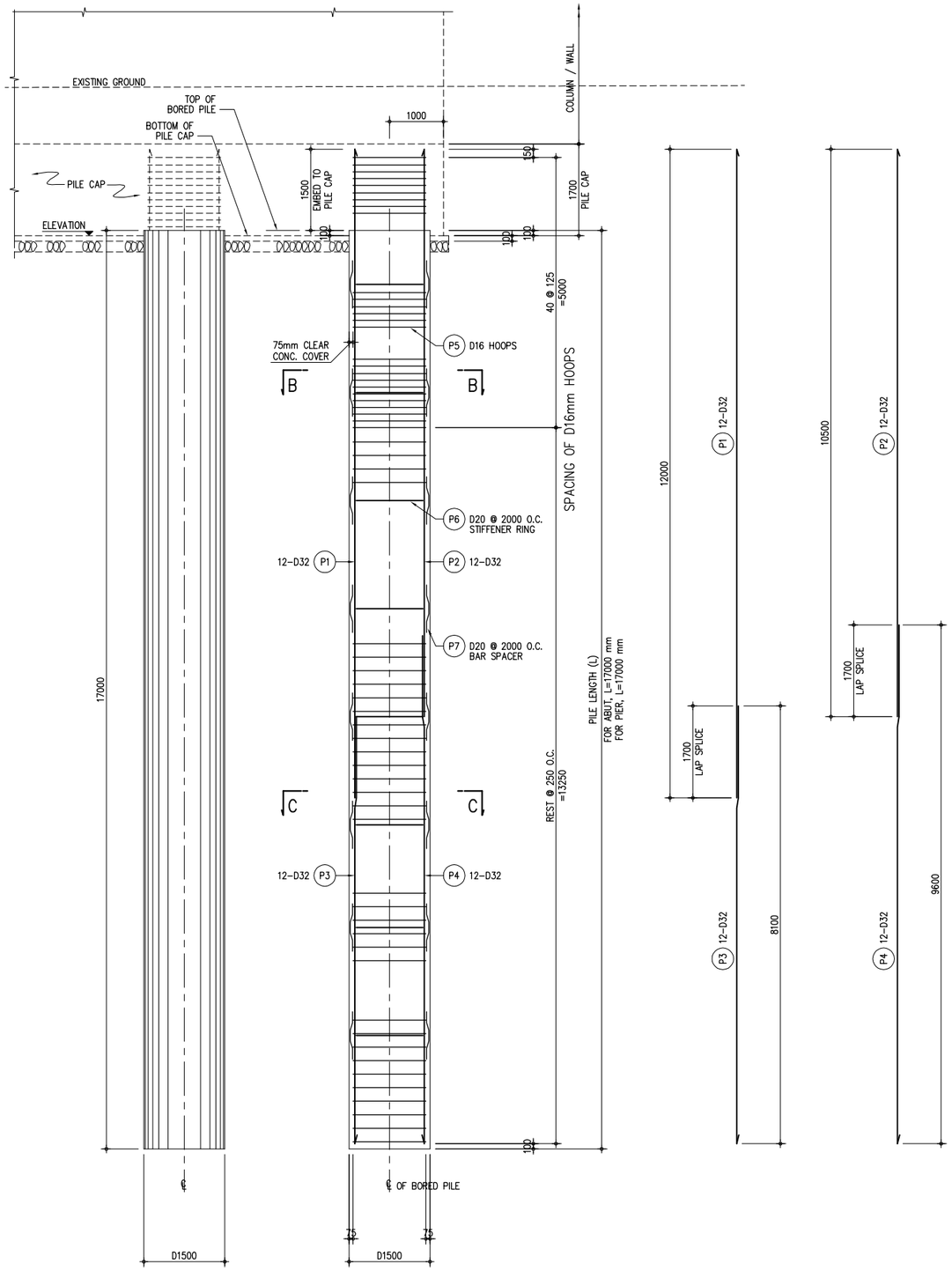

A TRANSVERSE ELEVATION
SCALE 1:50

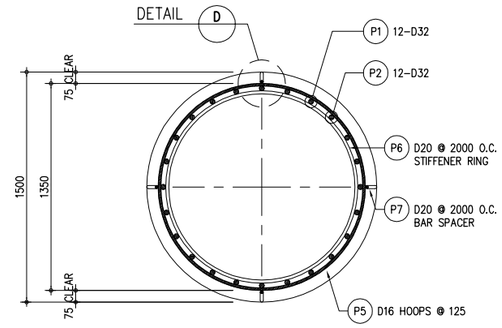

B SECTION
SCALE 1:20

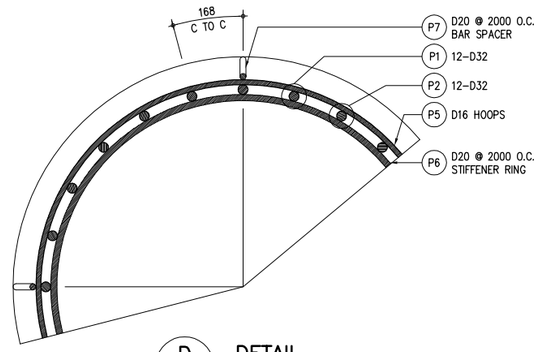

D DETAIL
SCALE 1:10

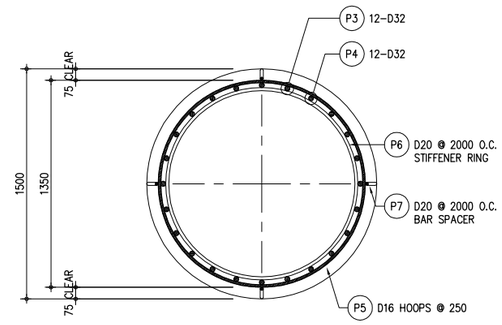

C SECTION
SCALE 1:20

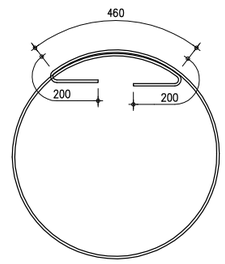

E HOOPS SPLICE DETAIL
SCALE NONE

REINFORCING BARS																CONCRETE
BAR BENDING	LOCATION	BAR MARK	BAR SHAPE	SPACING (mm)	QTY	SIZE	DIMENSION (mm)					LENGTH PER BAR (m)	TOTAL LENGTH (m)	UNIT WEIGHT (kg/m)	TOTAL WEIGHT (kg)	VOLUME (m^3)
							a	b	c	d	e					
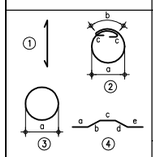	BORED PILE	P1	1	168	12	D32	12000	–	–	–	–	12.00	144.00	6.313	909.07	30.22
		P2	1	168	12	D32	10500	–	–	–	–	10.50	126.00	6.313	795.44	
		P3	1	168	12	D32	8100	–	–	–	–	8.10	97.20	6.313	613.62	
		P4	1	168	12	D32	9600	–	–	–	–	9.60	115.2	6.313	727.26	
		P5	2	125/250	94	D16	1350	460	200	–	–	5.10	99.10	1.579	156.48	
		P6	3	2000	8	D20	1254	460	–	–	–	4.40	35.20	2.466	86.80	
		P7	4	2000	32	D20	200	140	200	140	200	0.88	28.16	2.466	69.44	
															3,358.11	

THE DEMOCRATIC SOCIALIST REPUBLIC OF SRI LANKA
MINISTRY OF HIGHWAYS & ROAD DEVELOPMENT
Road Development Authority

JICA JAPAN INTERNATIONAL COOPERATION AGENCY
ORIENTAL CONSULTANTS COMPANY LIMITED
in association with
PACIFIC CONSULTANTS INTERNATIONAL

No	REVISION	DATE

COLOMBO OUTER CIRCULAR HIGHWAY PROJECT
(NORTHERN SECTION 1)

OVERPASS BRIDGE NO. 8
D1500mm BORED PILE REBAR DETAILS (L=17.00m)

DESIGNED BY:
CHECKED BY:
APPROVED BY:
DWG. NO. K02-29

DIMENSIONS OF BEARING PAD

TYPE	Dimensions a' x b' x t (mm)	Chloroprene Layers		Reinforcement Plate				Surface Layer
		Thickness of Layer	Number of Layers	Transversal Width	Longitudinal Width	Thickness & Number		Thickness & Number
		te (mm)	ne	a (mm)	b (mm)	t1x n (mm)	t2 x n (mm)	ts x n (mm)
Fix	360 x 260 x 36	12	2	340	240	2 x 3	-	3 x 2
Move	410 x 310 x 54	12	3	390	290	2 x 4	-	3 x 2

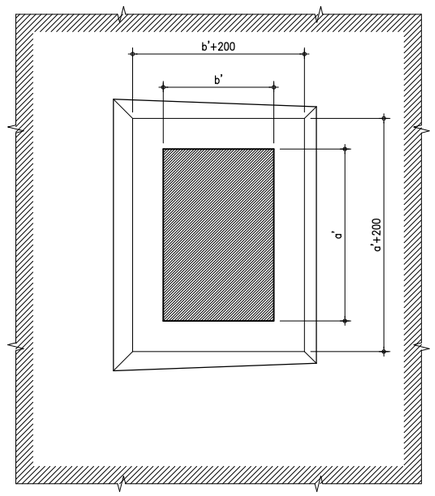

PLAN

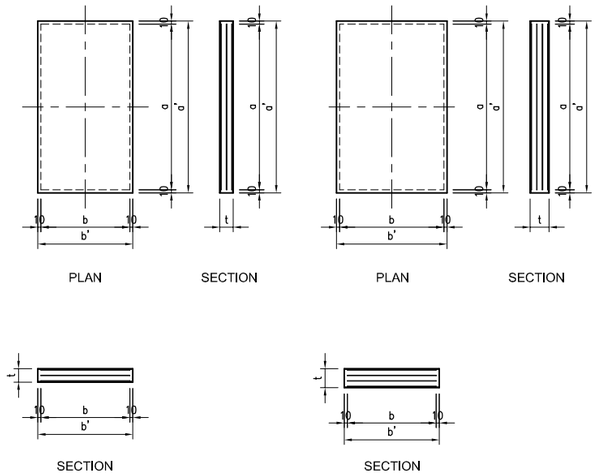

ELASTOMERIC MATERIAL (POLY-CHLOROPRENE)

ITEM		UNIT	REQUIRED VALUE	TEST METHOD
Static Shearing Elasticity Modulus		kgf/cm2	10 ± 1	JIS K6254
Hardness		-	A60 ± 5	JIS K6253
Elongation		%	440 or more	JIS K6251
Tensile Strength		Kg/cm2	150 or more	JIS K6251
Fatigue Test	Strength Changing Ratlon for 25 % Elongation	%	between -10 and +100	JIS K6257 (100°C x 70 hrs)
	Elongation Ratio	%	-50 or more	
Ratio of Compressive Permanent Strain		%	35 or less	JIS K6262 (100°C x 22hrs)
Ozone Deterioration		-	No crack to be observed by naked eye	JIS K6259
Moisture Absorption (Mass Change Ratio Due to Water)		%	10 or less	JIS K6258
Low Temperature Resistance		Degree	-30°C or less	JIS K6260
Resistance to Stripping		kgf/cm	7 or more	JIS K6256

REINFORCEMENT PLATE (STEEL PLATE)

ITEM	UNIT	REQUIRED VALUE	TEST METHOD
Ultimate Strength	N/mm2	400 or more	JIS G3101
Elongation	%	21 or more	
Yield Strength	N/mm2	245 or more	

Note: All Elastomeric Bearing Pads shall be designed in accordance with Japan Road Association Standard or other equivalent Standard

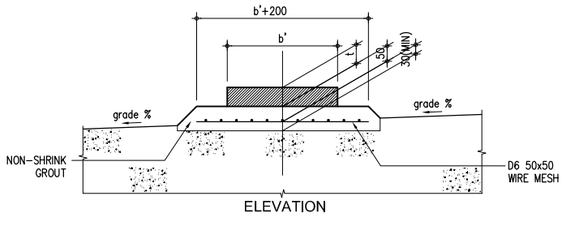

1 / - BEARING PAD
SCALE 1:10

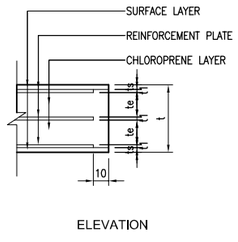

A / - 2 LAYERS TYPE
SCALE NTS

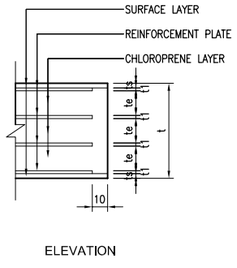

B / - 3 LAYERS TYPE
SCALE NTS

LOCATIONS OF ELASTOMERIC BEARING PADS

BRIDGE NO.			OB-08			Total Number
BRIDGE TYPE			PC-I			
LOCATION			A1	P1	A2	
SUPPORT CONDITION			M	F	M	
ELASTOMERIC BEARING PAD	FIX	360 x 260 x 36		12		12
	MOVE	410 x 310 x 54	6		6	12

THE DEMOCRATIC SOCIALIST REPUBLIC OF SRI LANKA
MINISTRY OF HIGHWAYS & ROAD DEVELOPMENT
Road Development Authority

JICA JAPAN INTERNATIONAL COOPERATION AGENCY
ORIENTAL CONSULTANTS COMPANY LIMITED
in association with
PACIFIC CONSULTANTS INTERNATIONAL

No	REVISION	DATE

COLOMBO OUTER CIRCULAR HIGHWAY PROJECT
(NORTHERN SECTION 1)

OVERPASS BRIDGE NO.8
DETAILS OF ELASTOMERIC BEARING SHOE

DESIGNED BY:
CHECKED BY:
APPROVED BY:
DWG. NO. K02-30

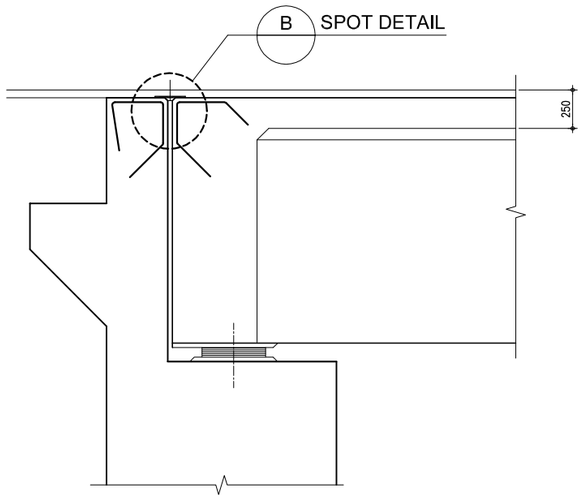

A ELEVATION
SCALE 1:20

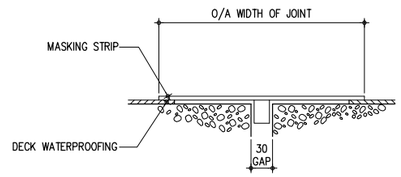

1. EXPANSION GAP COVERED WITH MASKING STRIP (HARDBOARD OR PLYWOOD) WITH WOOD FILLET ENGAGING IN EXPANSION GAP WITH SUFFICIENT CLEARANCE TO ALLOW FOR THERMAL MOVEMENTS.

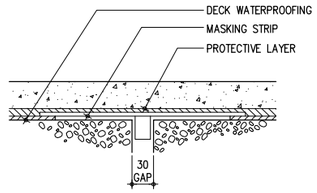

2. SURFACING LAID OVER JOINT.

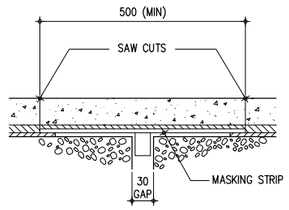

3. SAW CUT EACH SIDE OF MASKING STRIP.

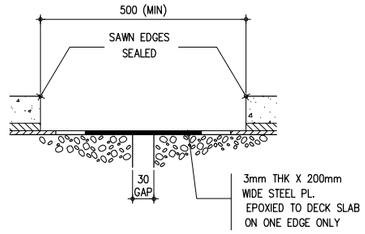

4. SURFACING AND MASKING STRIP REMOVED AND EXPOSED CONCRETE PREPARED AND CLEANED. SAWN EDGES PRIMED WITH WATERPROOF SEALER.

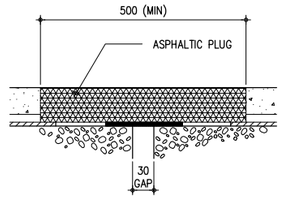

5. FOR A BONDED SYSTEM THE JOINT MATERIAL CAN NOW BE INSTALLED.

C TYPICAL INSTALLATION PROCEDURE
SCALE N T S

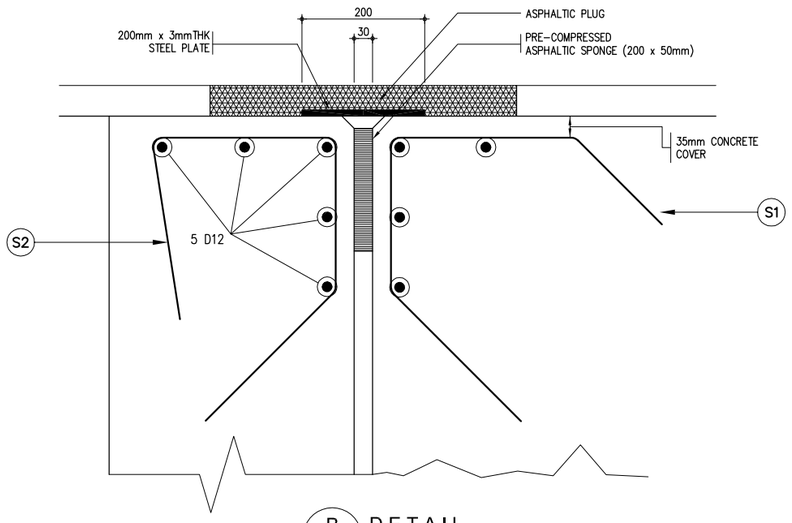

B DETAIL
SCALE 1:5

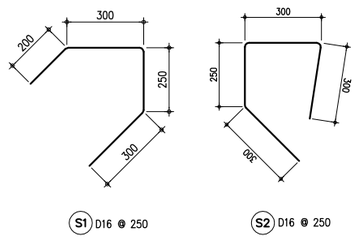

BAR BENDING DIAGRAM

1 DETAIL OF EXPANSION JOINT
SCALE AS SHOWN

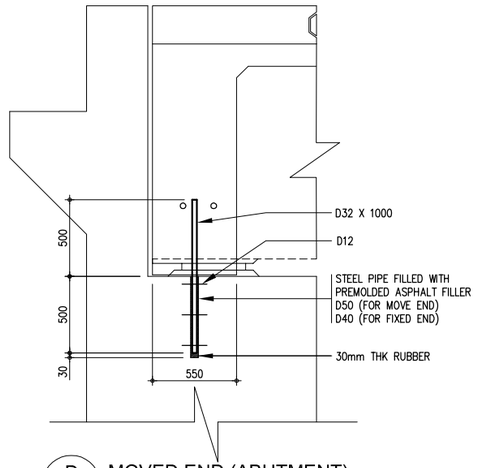

D MOVED END (ABUTMENT)
SCALE 1:20

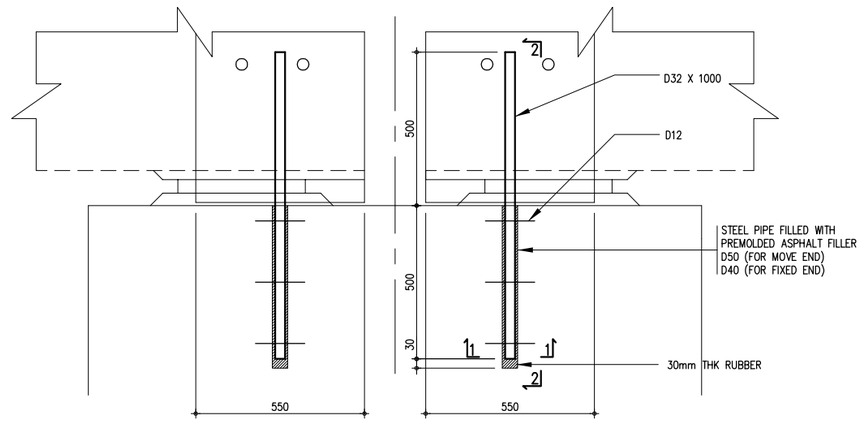

E FIXED END (PIER)
SCALE 1:10

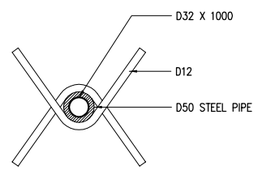

F SECTION 1-1
SCALE 1:5

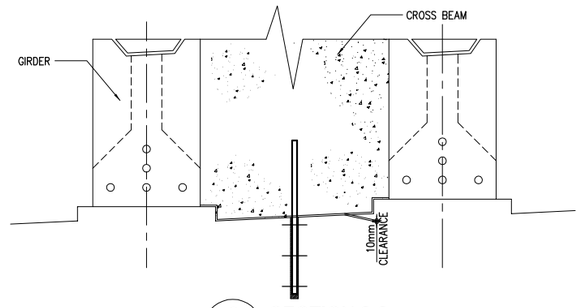

G SECTION 2-2
SCALE 1:20

2 ANCHORAGE DETAIL TYPICAL (MOVED AND FIXED)
SCALE AS SHOWN

THE DEMOCRATIC SOCIALIST REPUBLIC OF SRI LANKA
MINISTRY OF HIGHWAYS & ROAD DEVELOPMENT
Road Development Authority

JICA JAPAN INTERNATIONAL COOPERATION AGENCY
ORIENTAL CONSULTANTS COMPANY LIMITED
in association with
PACIFIC CONSULTANTS INTERNATIONAL

No	REVISION	DATE

COLOMBO OUTER CIRCULAR HIGHWAY PROJECT
(NORTHERN SECTION 1)

OVERPASS BRIDGE NO. 8
DETAILS OF EXPANSION JOINT / ANCHORAGE DETAIL TYPICAL (MOVED AND FIXED)

DESIGNED BY:	
CHECKED BY:	
APPROVED BY:	
DWG. NO.	K02-31

LAYOUT PLAN OF DRAINAGE (OB-08)

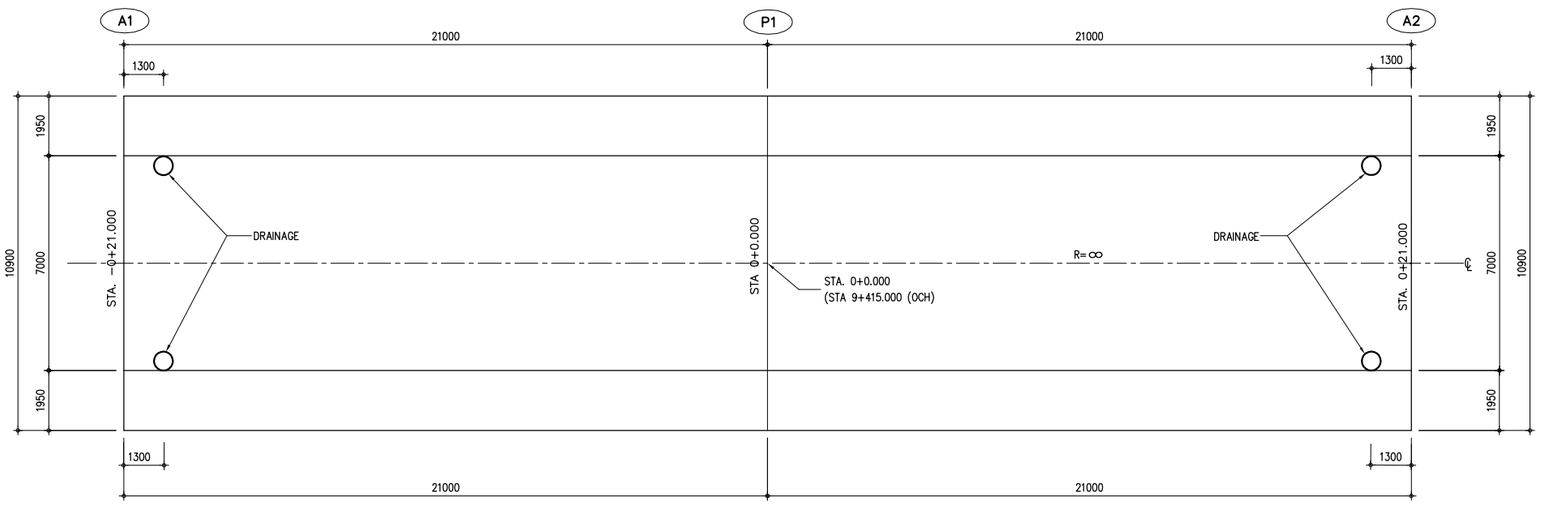

1 PLAN
SCALE 1:100

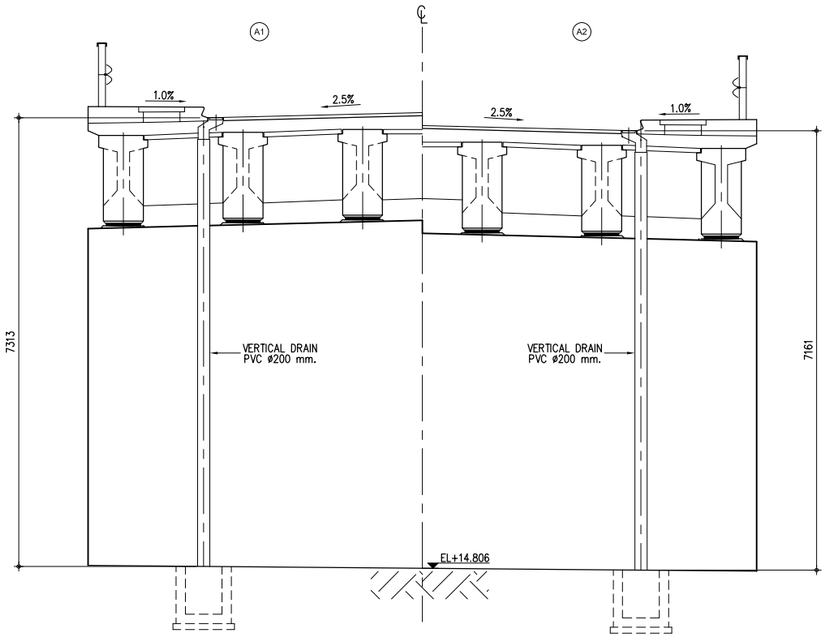

1 CROSS SECTION
SCALE 1:50

THE DEMOCRATIC SOCIALIST REPUBLIC OF SRI LANKA MINISTRY OF HIGHWAYS & ROAD DEVELOPMENT **Road Development Authority**	JICA JAPAN INTERNATIONAL COOPERATION AGENCY ORICONSUL ORIENTAL CONSULTANTS COMPANY LIMITED in association with PACIFIC CONSULTANTS INTERNATIONAL	No	REVISION	DATE	COLOMBO OUTER CIRCULAR HIGHWAY PROJECT (NORTHERN SECTION 1) OVERPASS BRIDGE NO.8 DETAILS OF DRAINAGE

DESIGNED BY:	
CHECKED BY:	
APPROVED BY:	
DWG. NO.	K02-32

BRIDGE MESH FENCE
TYPE-1

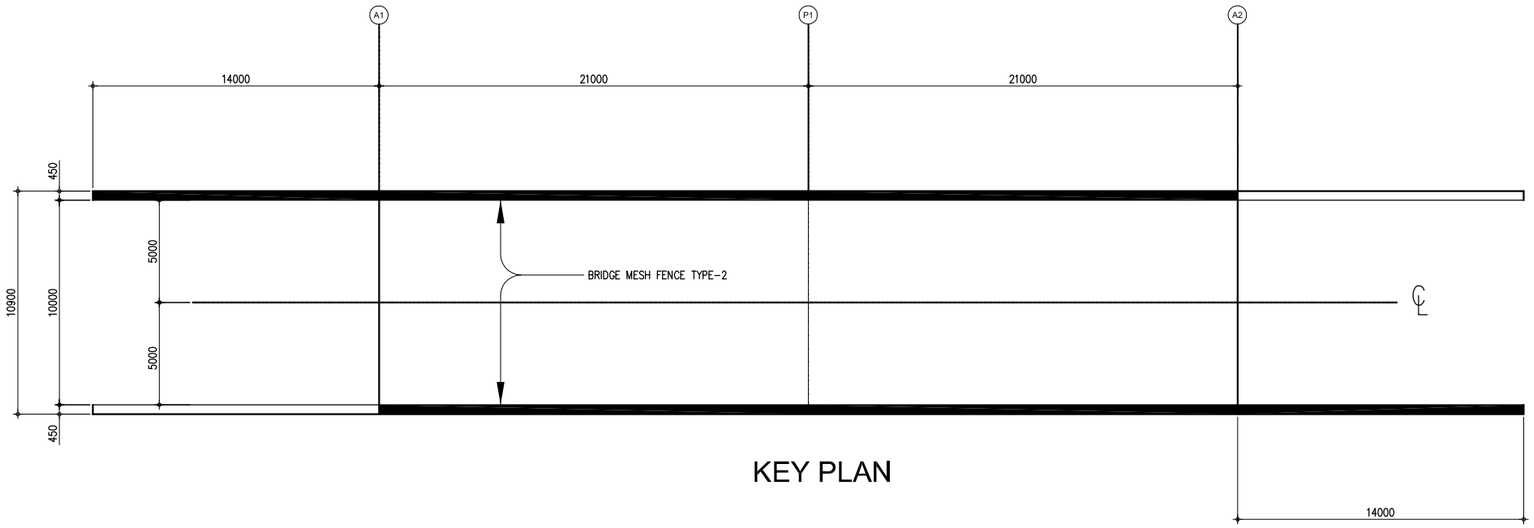

KEY PLAN

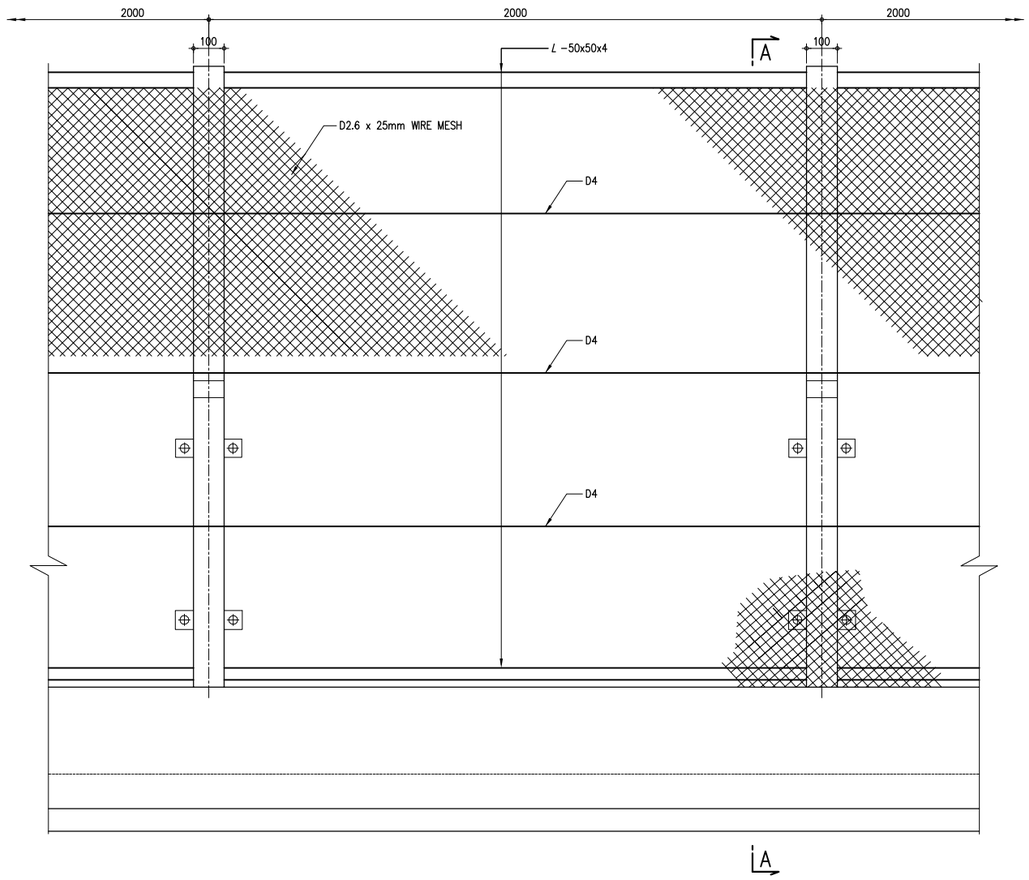

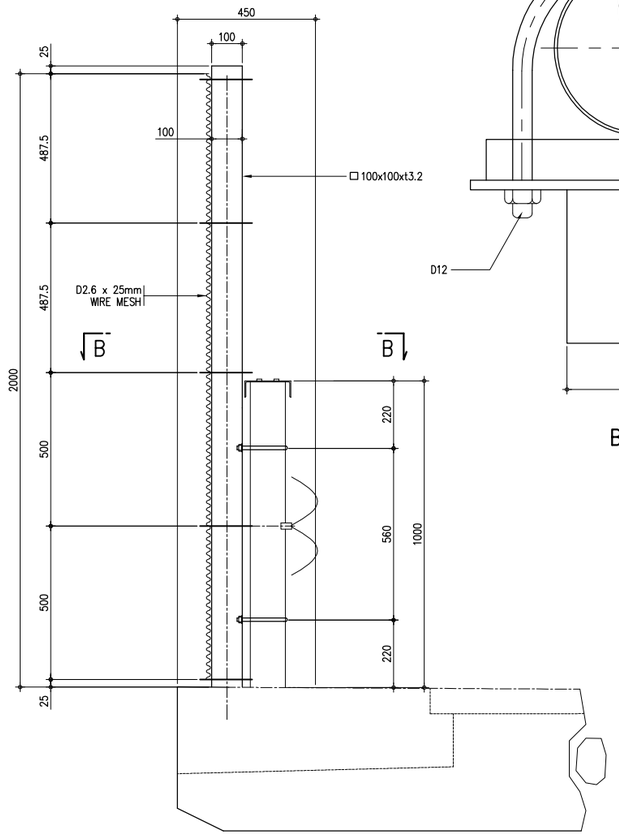

A – A

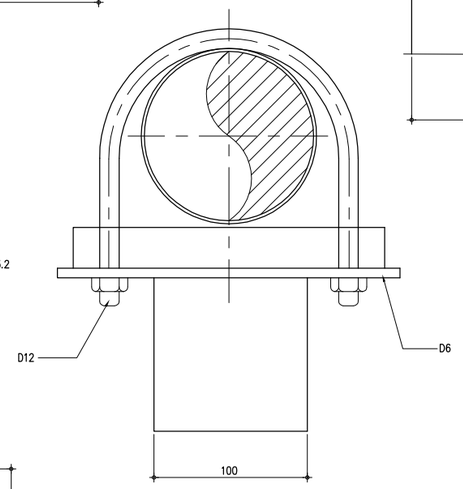

B – B

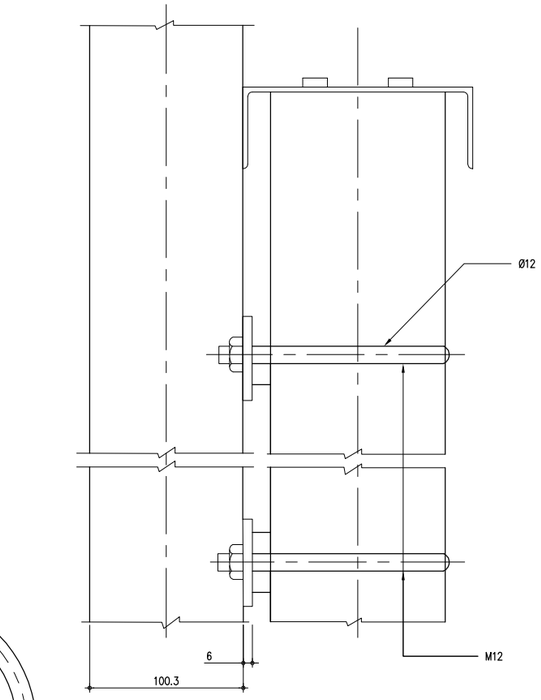

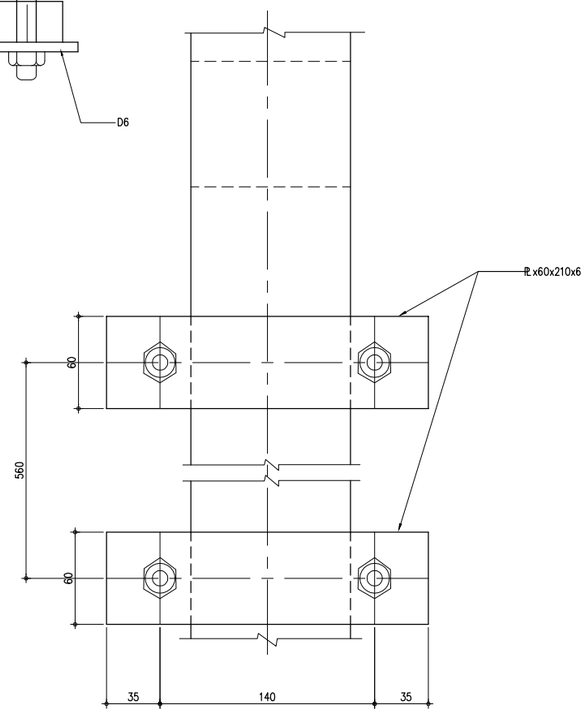

THE DEMOCRATIC SOCIALIST REPUBLIC OF SRI LANKA MINISTRY OF HIGHWAYS & ROAD DEVELOPMENT **Road Development Authority**	JICA JAPAN INTERNATIONAL COOPERATION AGENCY ORICONSUL ORIENTAL CONSULTANTS COMPANY LIMITED in association with PACIFIC CONSULTANTS INTERNATIONAL	No / REVISION / DATE	COLOMBO OUTER CIRCULAR HIGHWAY PROJECT (NORTHERN SECTION 1) OVERPASS BRIDGE NO.8 BRIDGE MESH FENCE (TYPE-1)	DESIGNED BY: CHECKED BY: APPROVED BY: DWG. NO.	K02-33

K03 OVERPASS BRIDGE

No.9(09)-STA.10+210.000

COLOMBO OUTER CIRCULAR HIGHWAY PROJECT

OVERPASS BRIDGE NO. 9 - GENERAL VIEW (1)

(STA. 10+210.000)

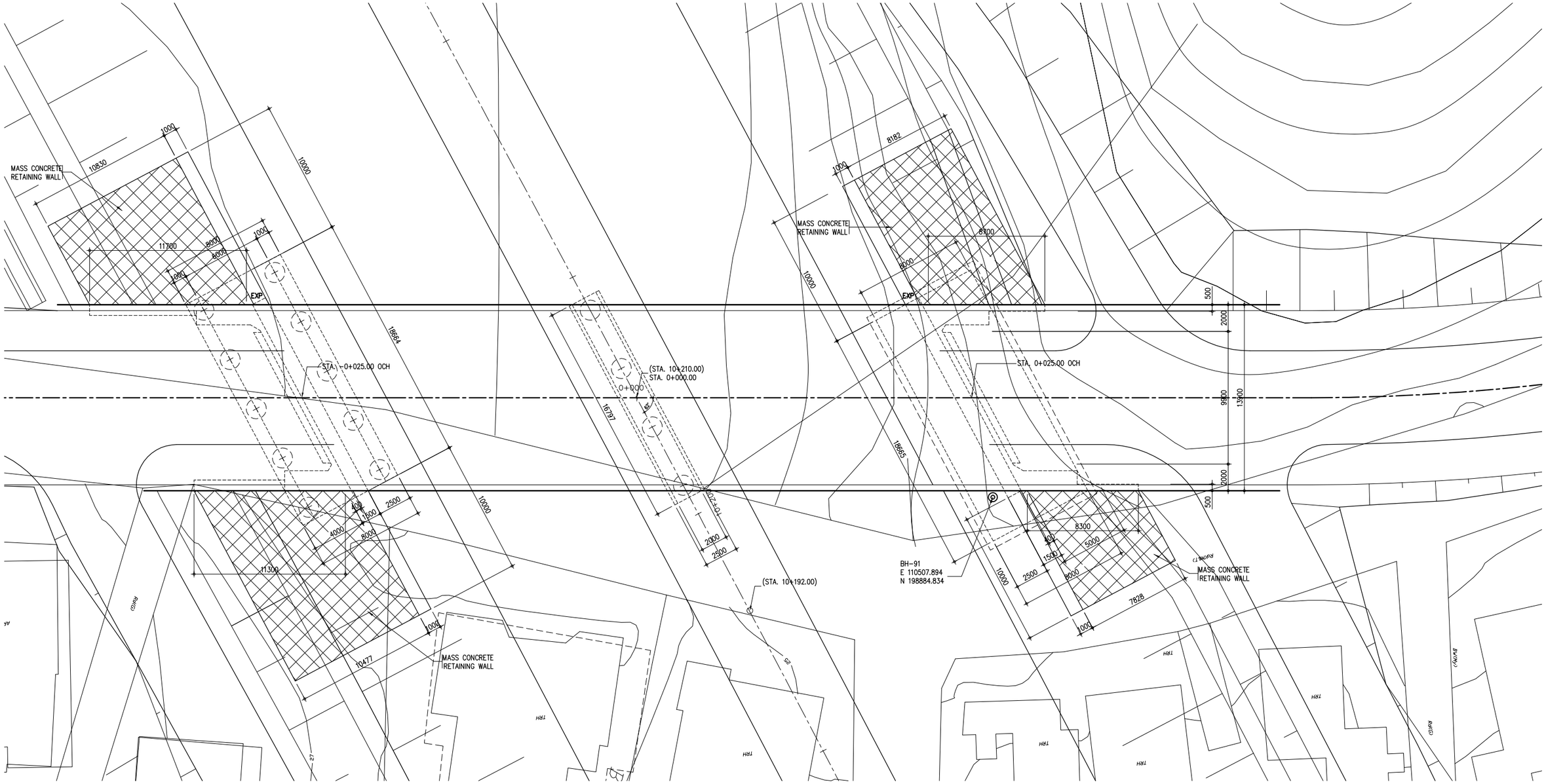

2 PROFILE
SCALE 1:150

NOTES :

1. ALL DIMENSIONS ARE IN MILLIMETERS.
2. THIS DRAWING SHOULD BE READ IN CONJUNCTION WITH THE OTHER RELEVANT DRAWINGS.

THE DEMOCRATIC SOCIALIST REPUBLIC OF SRI LANKA MINISTRY OF HIGHWAYS & ROAD DEVELOPMENT **Road Development Authority**	JICA JAPAN INTERNATIONAL COOPERATION AGENCY ORICONSUL ORIENTAL CONSULTANTS COMPANY LIMITED in association with PACIFIC CONSULTANTS INTERNATIONAL	No	REVISION	DATE	**COLOMBO OUTER CIRCULAR HIGHWAY PROJECT** **(NORTHERN SECTION 1)** OVERPASS BRIDGE NO. 9 - GENERAL VIEW (1) STA. 10+210.000	DESIGNED BY: CHECKED BY: APPROVED BY: DWG. NO. K03-00-A

OVERPASS BRIDGE NO. 9 - GENERAL VIEW (2)

(STA. 10+210.000)

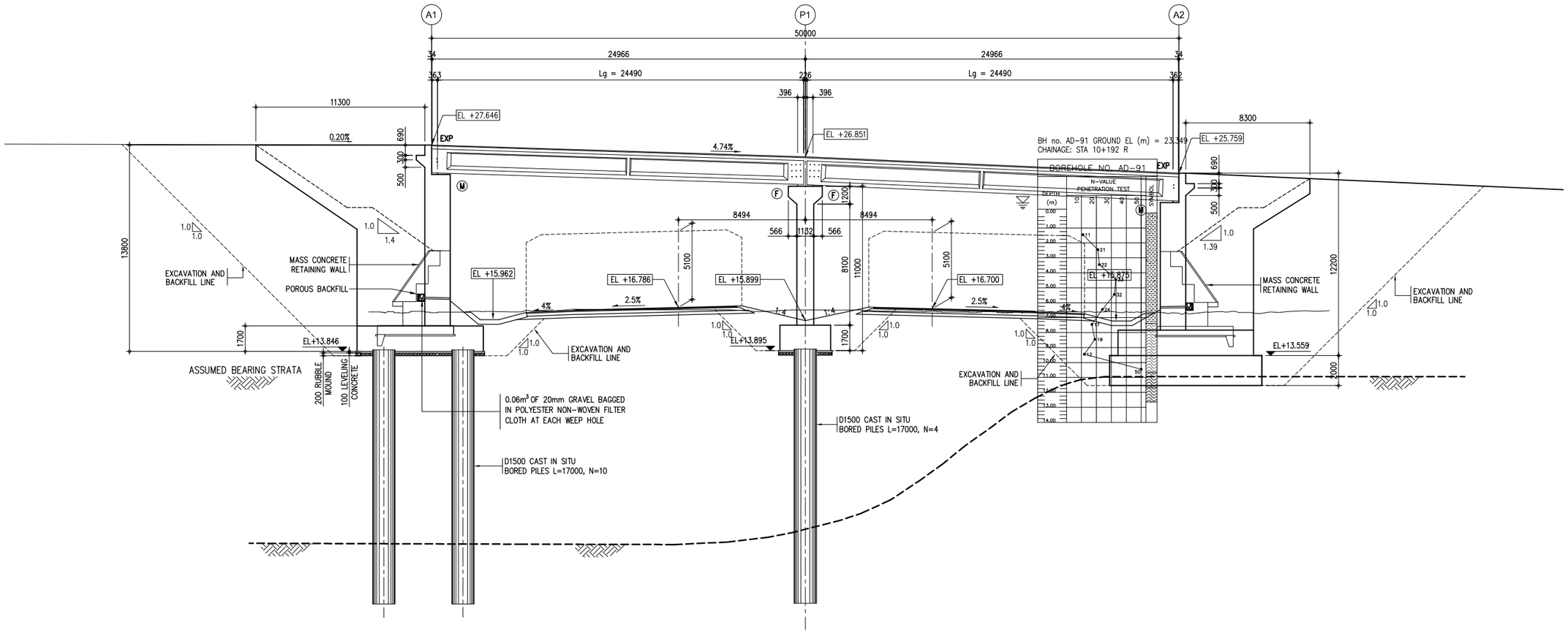

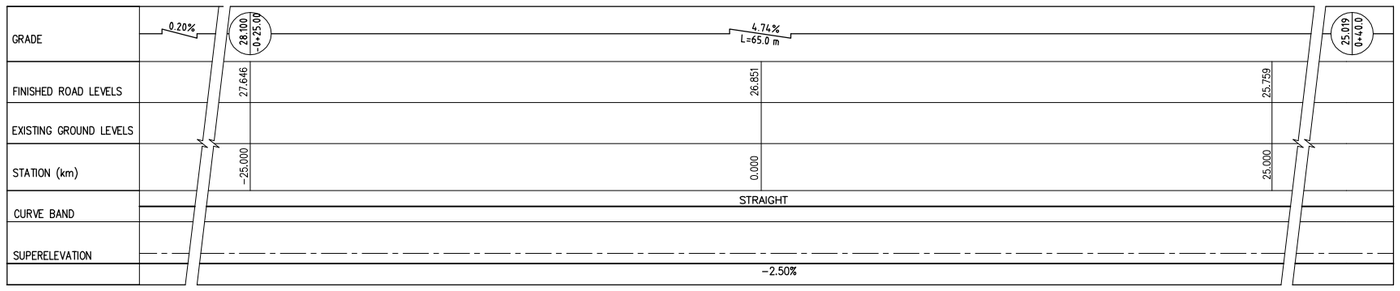

2 – PROFILE
SCALE 1:150

NOTES :

1. ALL DIMENSIONS ARE IN MILLIMETERS.
2. THIS DRAWING SHOULD BE READ IN CONJUNCTION WITH THE OTHER RELEVANT DRAWINGS.

THE DEMOCRATIC SOCIALIST REPUBLIC OF SRI LANKA MINISTRY OF HIGHWAYS & ROAD DEVELOPMENT **Road Development Authority**	JICA JAPAN INTERNATIONAL COOPERATION AGENCY ORIENTAL CONSULTANTS COMPANY LIMITED in association with PACIFIC CONSULTANTS INTERNATIONAL	No / REVISION / DATE	COLOMBO OUTER CIRCULAR HIGHWAY PROJECT (NORTHERN SECTION 1) OVERPASS BRIDGE NO. 9 - GENERAL VIEW (2) STA. 10+210.000	DESIGNED BY: CHECKED BY: APPROVED BY: DWG. NO.	K03-00-B

OVERPASS BRIDGE NO. 9 - GENERAL VIEW (3)

(STA. 10+210.000)

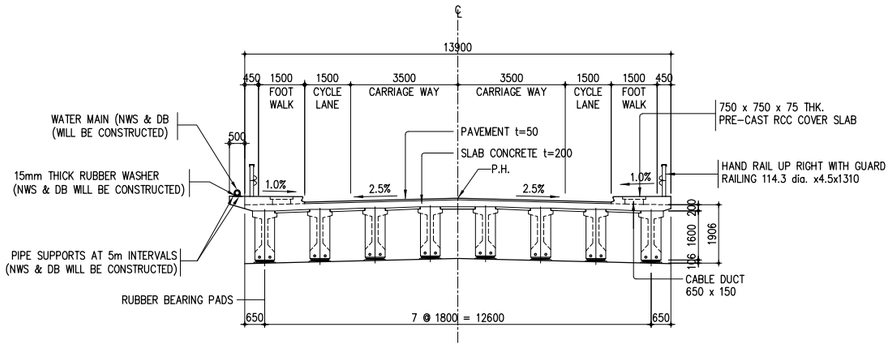

SUPERSTRUCTURE

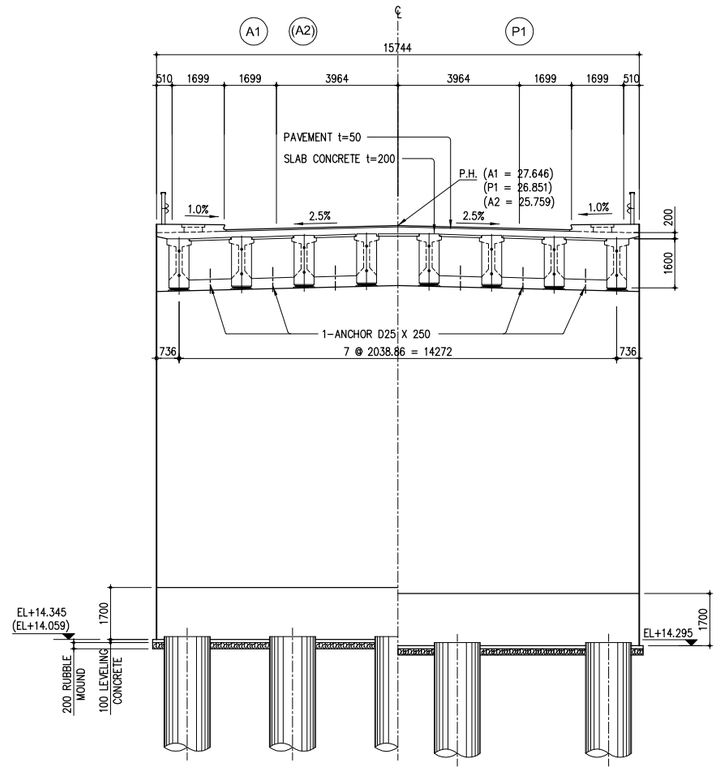

SUBSTRUCTURE

3 / – CROSS SECTION

SCALE 1:100

NOTES :

1. ALL DIMENSIONS ARE IN MILLIMETERS.
2. THIS DRAWING SHOULD BE READ IN CONJUNCTION WITH THE OTHER RELEVANT DRAWINGS

THE DEMOCRATIC SOCIALIST REPUBLIC OF SRI LANKA MINISTRY OF HIGHWAYS & ROAD DEVELOPMENT **Road Development Authority**	JICA JAPAN INTERNATIONAL COOPERATION AGENCY ORICONSUL ORIENTAL CONSULTANTS COMPANY LIMITED in association with PACIFIC CONSULTANTS INTERNATIONAL	No / REVISION / DATE	COLOMBO OUTER CIRCULAR HIGHWAY PROJECT (NORTHERN SECTION 1) OVERPASS BRIDGE NO. 9 - GENERAL VIEW (3) STA. 10+210.000	DESIGNED BY: CHECKED BY: APPROVED BY: DWG. NO.	 K03-00-C

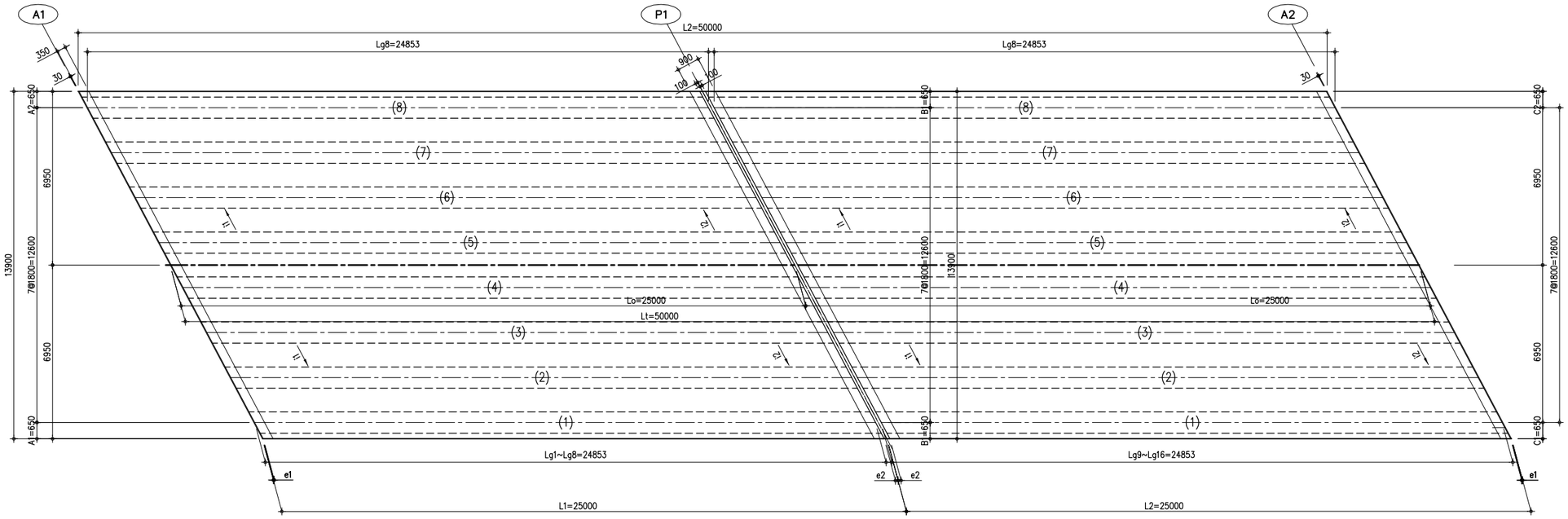

	2 SPAN CONTINUOUS BRIDGE
	A1~P1~A2
Lt (m)	50.000
Lo (m)	25.000
L1 (m)	25.000
L2 (m)	25.000
β1 (°)	27°58'12"
β2 (°)	27°58'12"
e1/e2 (mm)	30/100
i1 (%)	2.50
i2 (%)	2.50
Lg1/8 (m)	24853
Lg9/16 (m)	24853
A1/A2 (mm)	650/650
B1/B2 (mm)	650/650
C1/C2 (mm)	650/650
Lg1 (m)~Lg8 (m)	24.853
SPAN LENGTH (m)	2@25.0=50.0
REMARKS	

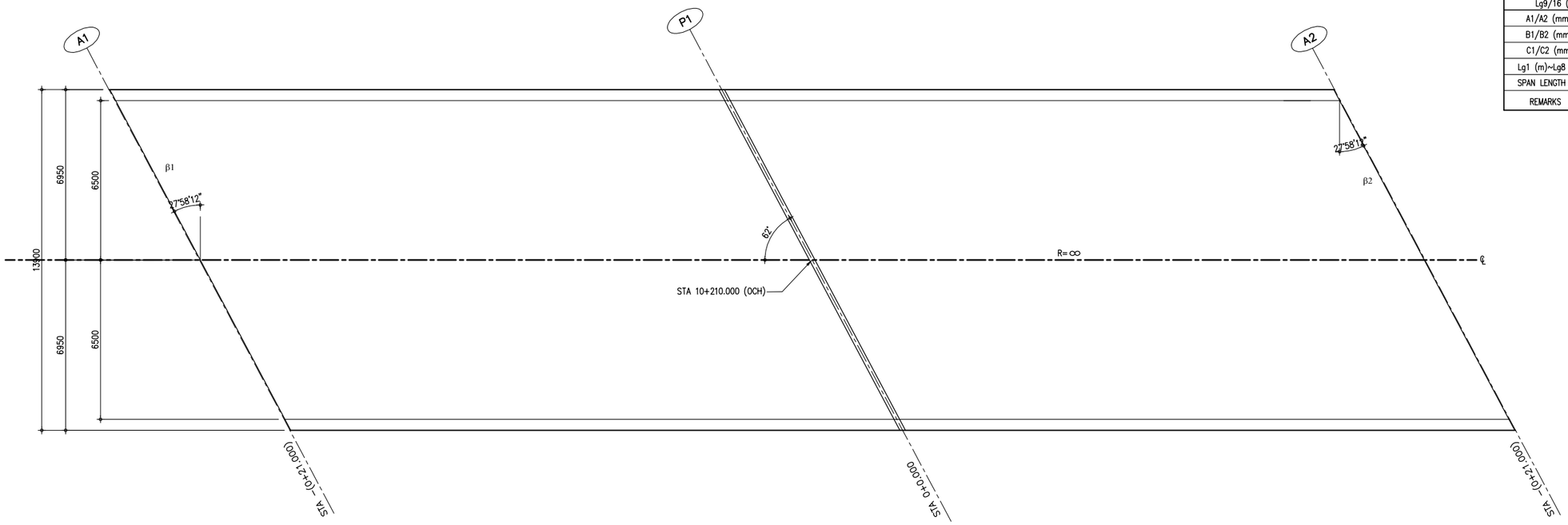

A - LAYOUT PLAN

THE DEMOCRATIC SOCIALIST REPUBLIC OF SRI LANKA
MINISTRY OF HIGHWAYS & ROAD DEVELOPMENT
Road Development Authority

JICA JAPAN INTERNATIONAL COOPERATION AGENCY
ORICONSUL ORIENTAL CONSULTANTS COMPANY LIMITED
in association with
PACIFIC CONSULTANTS INTERNATIONAL

No	REVISION	DATE

COLOMBO OUTER CIRCULAR HIGHWAY PROJECT
(NORTHERN SECTION 1)

OVERPASS BRIDGE NO.9
LAYOUT PLAN

DESIGNED BY:	
CHECKED BY:	
APPROVED BY:	
DWG. NO.	K03-1

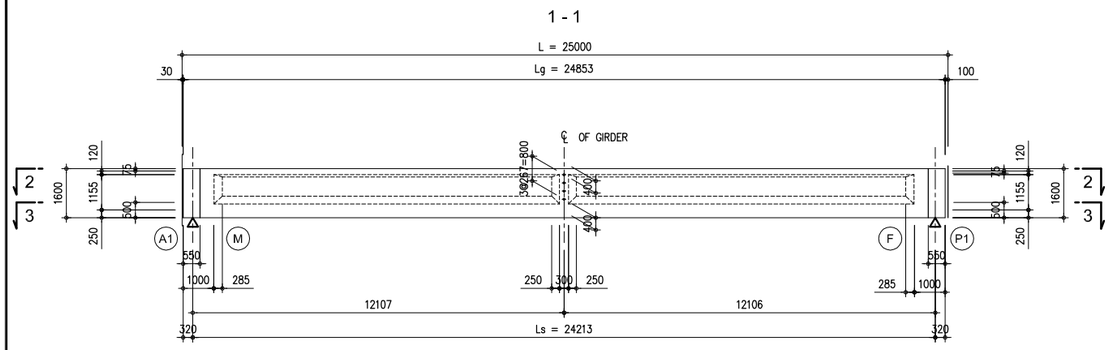

B SIDE VIEW
SCALE 1:100

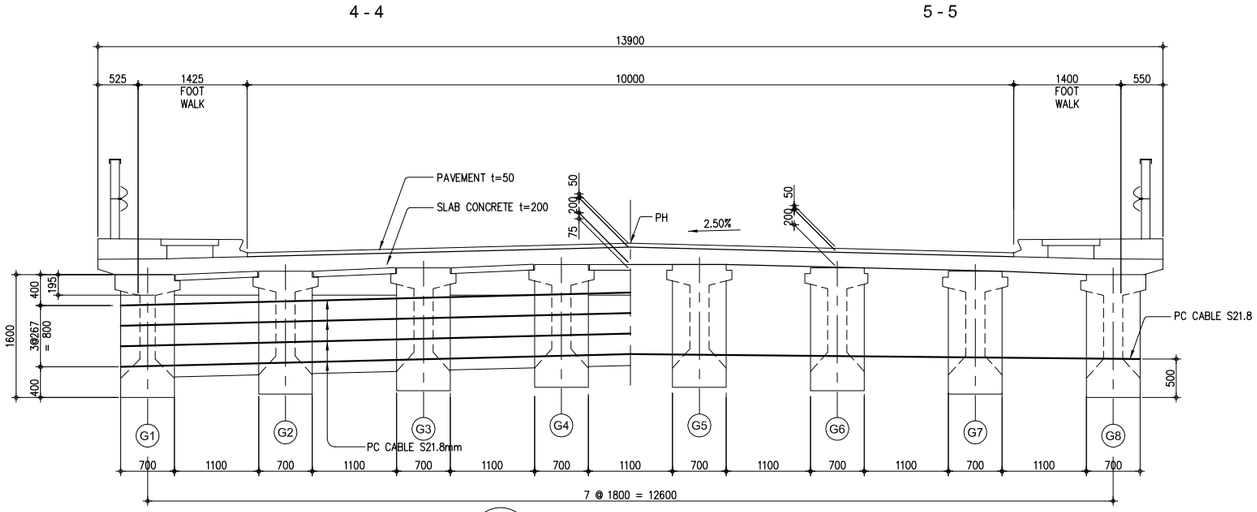

C CROSS SECTION
SCALE 1:40

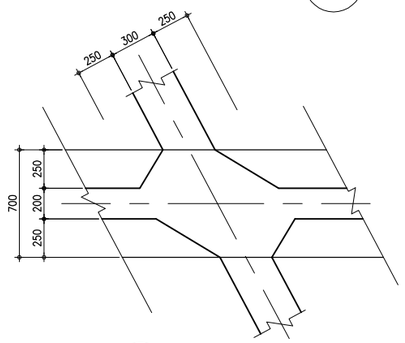

D DETAIL - A
SCALE 1:20

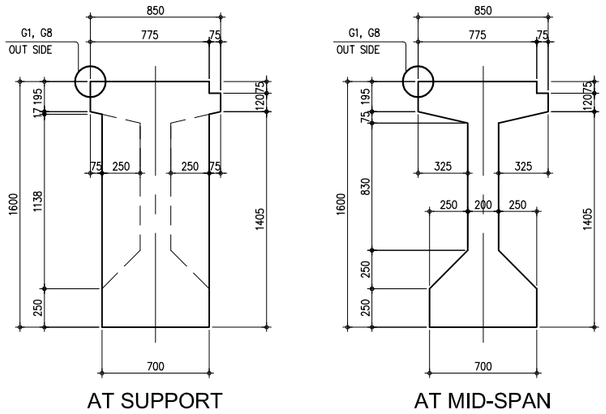

E GIRDER CROSS SECTION
SCALE 1:20

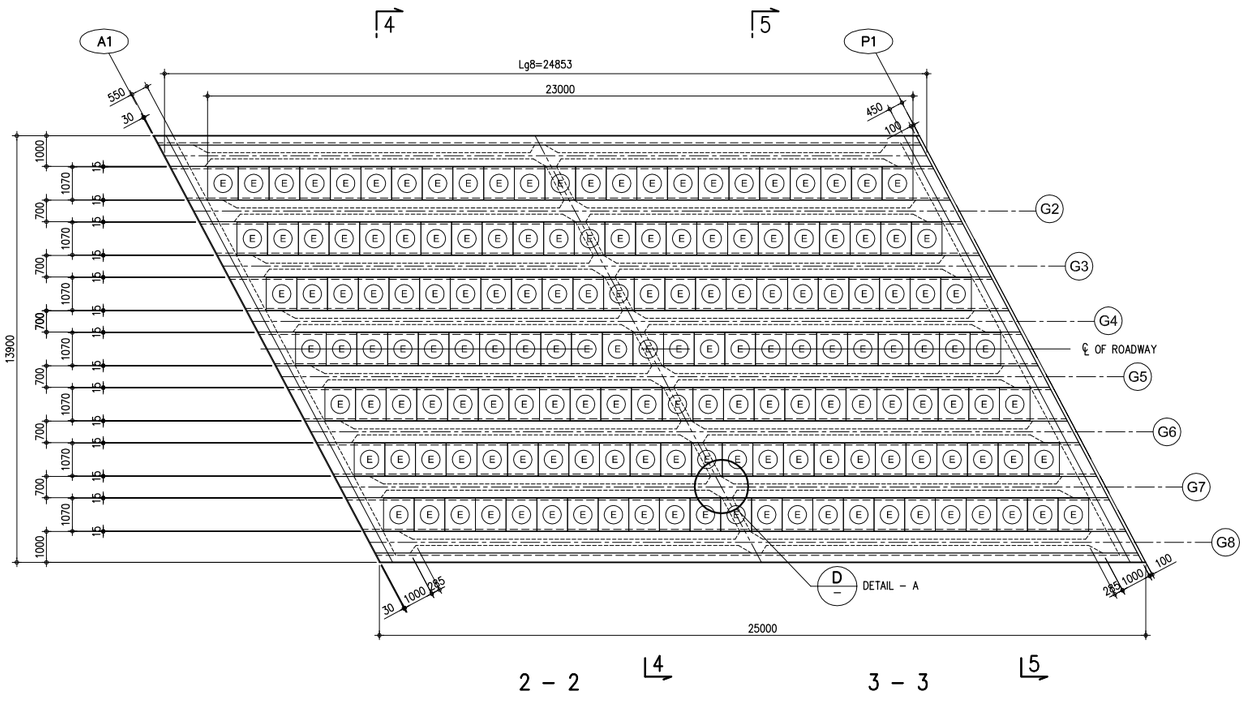

A PLAN
SCALE 1:100

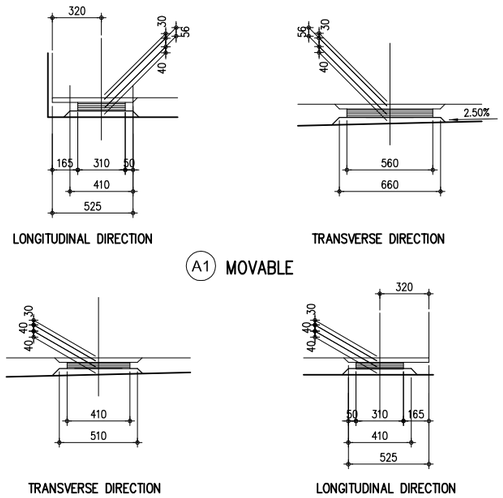

F BEARING DETAILS
SCALE 1:20

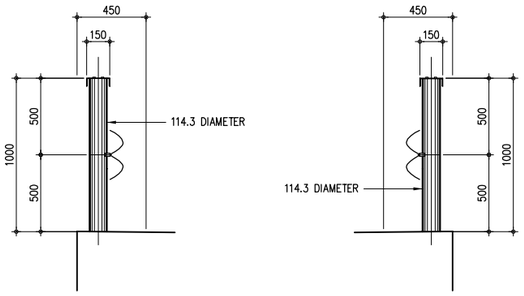

G BRIDGE PARAPET
SCALE 1:20

THE DEMOCRATIC SOCIALIST REPUBLIC OF SRI LANKA
MINISTRY OF HIGHWAYS & ROAD DEVELOPMENT
Road Development Authority

JICA JAPAN INTERNATIONAL COOPERATION AGENCY
ORIENTAL CONSULTANTS COMPANY LIMITED
in association with
PACIFIC CONSULTANTS INTERNATIONAL

No	REVISION	DATE

COLOMBO OUTER CIRCULAR HIGHWAY PROJECT
(NORTHERN SECTION 1)

OVERPASS BRIDGE NO.9
PCI - GIRDER LAYOUT AND DETAIL DIMENSION (2)

DESIGNED BY:	
CHECKED BY:	
APPROVED BY:	
DWG. NO.	K03-02

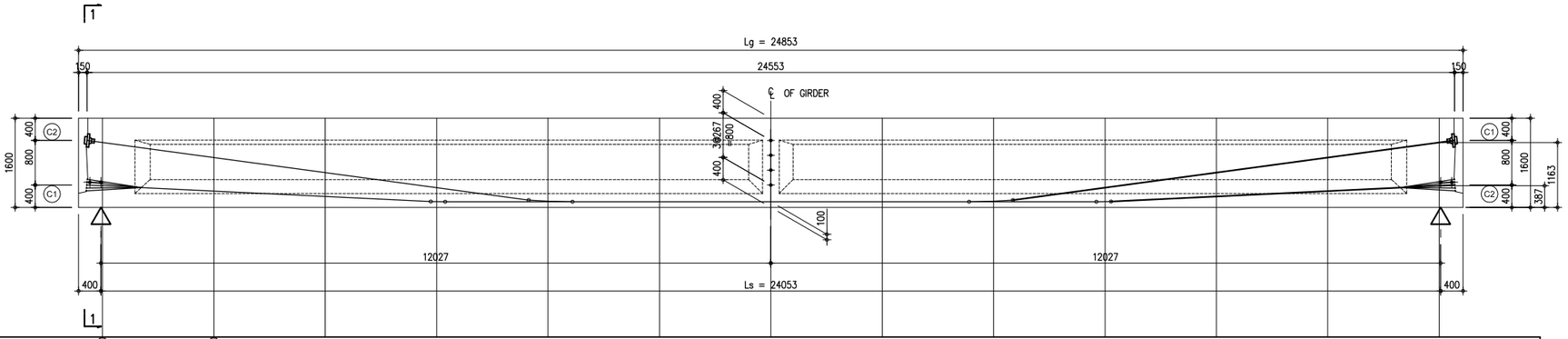

CABLE PROFILE (mm)	DISTANCE FROM ℄ (m)		-12.00	-10.00	-8.00	-6.00	-4.00	-2.00	0.00	2.00	4.00	6.00	8.00	10.00	10.00		
C1	DEAD END	▶	387	291	194	101	100	100	100	100	110	354	624	894	1164	◀ JACKING END	C1
C2	JACKING END	▶	1164	894	624	354	110	100	100	100	100	101	194	291	387	◀ DEAD END	C2

A – PROFILE OF CABLES

SCALE 1:50

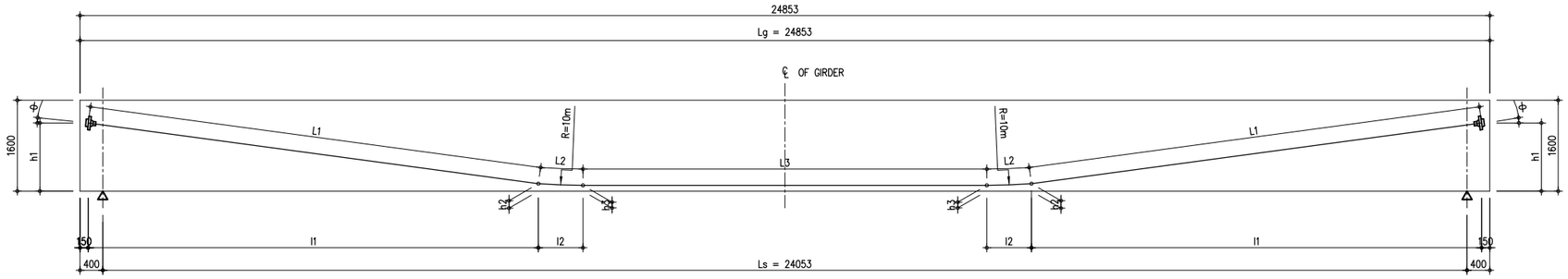

CABLE NO.	I1	I2	L1	L2	L3	$2\sum_{1}^{2}L+3$	h1	h2	h3	θ = (degree)
C1	7931	785	8003	785	7122	24698	1200	131	100	7° 41'
C2	6170	262	6177	262	11689	24567	400	103	100	2° 45'

TOTAL LENGTH Σ l = 49.27m

TOTAL WEIGHT W = 49.27 x 9.288 = 457.62 kg/1 girder

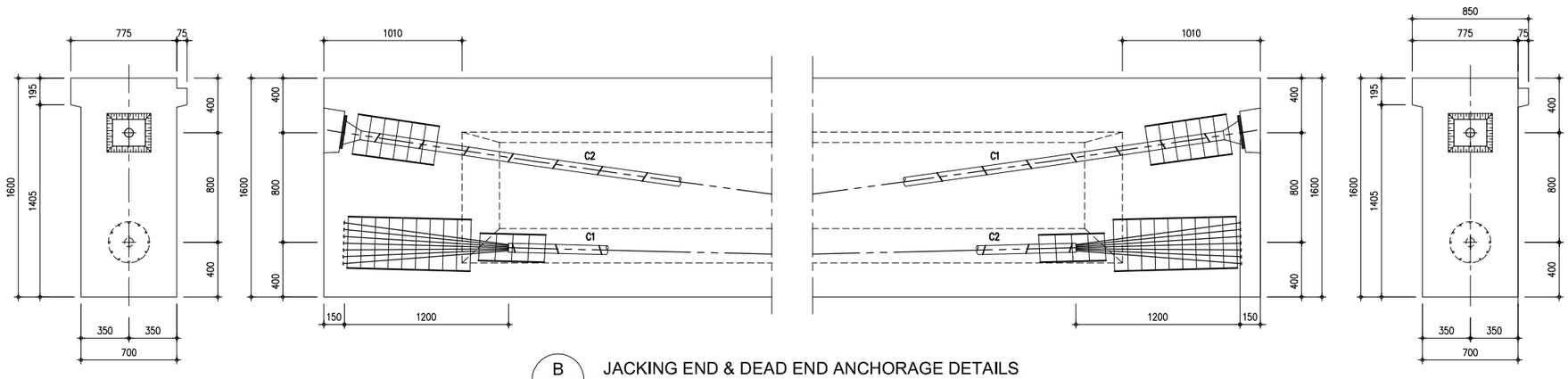

B – JACKING END & DEAD END ANCHORAGE DETAILS

SCALE 1:20

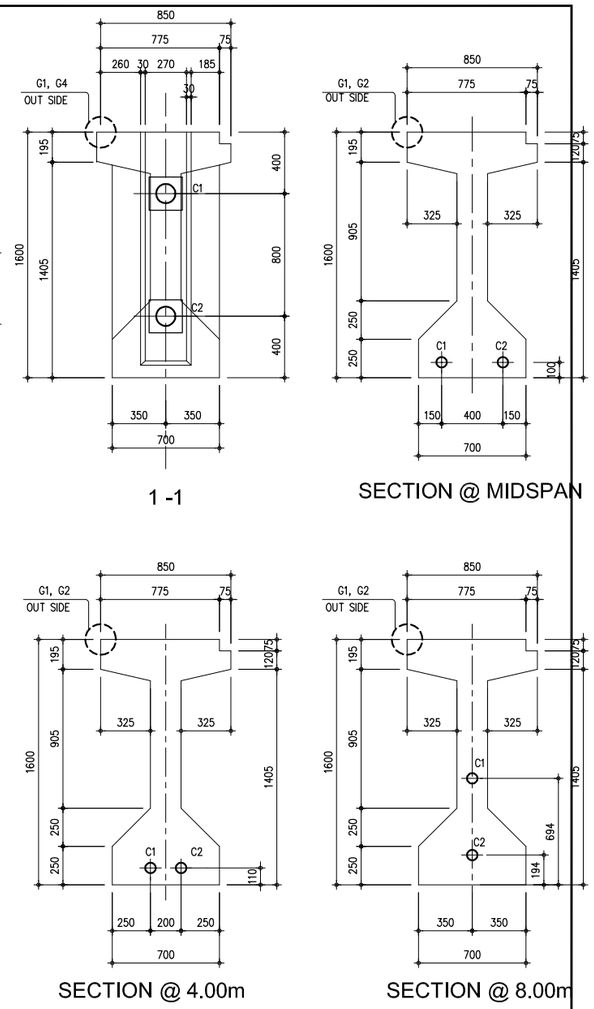

1 -1

SECTION @ MIDSPAN

SECTION @ 4.00m

SECTION @ 8.00m

C – GIRDER CROSS SECTION

SCALE 1:20

NOTES:

1. **PRESTRESSED CONCRETE:**
   - * CONCRETE CUBE STRENGTH, fcu = 50 MPa
   - * AT TRANSFER OF PRESTRESS, fci = 36 MPa
2. **PRESTRESSING STRANDS:**
   - * 1 –D12.7 IS A 7 – WIRE STRAND WITH NOMINAL TENSILE STRENGTH, fpu = 1860 MPa
   - * TOTAL NO. OF STRANDS = 2x12D12.7 = 24–D12.7
   - * JACKING STRESS, fpo = 1302 MPa
   - * TOTAL JACKING FORCE, Po = 2268 KN
   - * CABLE DUCT INSIDE DIAMETER (12–D12.7) = 65mm.
3. **REINFORCING STEEL :**
   - * ALL REINFORCING STEEL SHALL BE GRADE 460 WITH MINIMUM CHARACTERISTC STRENGTH, fy = 460 MPa
4. GIRDER PRE–CAMBER PRIOR TO STRESSING SHALL BE AS SHOWN BELOW

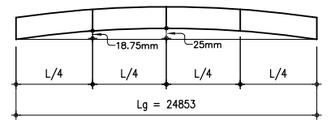

5. ALL DIMENSIONS ARE IN MILLIMETERS UNLESS OTHERWISE SPECIFIED.

THE DEMOCRATIC SOCIALIST REPUBLIC OF SRI LANKA
MINISTRY OF HIGHWAYS & ROAD DEVELOPMENT
Road Development Authority

JICA JAPAN INTERNATIONAL COOPERATION AGENCY
ORICONSUL ORIENTAL CONSULTANTS COMPANY LIMITED
in association with
PACIFIC CONSULTANTS INTERNATIONAL

No	REVISION	DATE

COLOMBO OUTER CIRCULAR HIGHWAY PROJECT
(NORTHERN SECTION 1)

OVERPASS BRIDGE No. 9
PROFILES OF CABLES, JACKING END & DEAD END ANCHORAGE DETAILS AND GIRDER CROSS SECTION

DESIGNED BY:	
CHECKED BY:	
APPROVED BY:	
DWG. NO.	K03-03

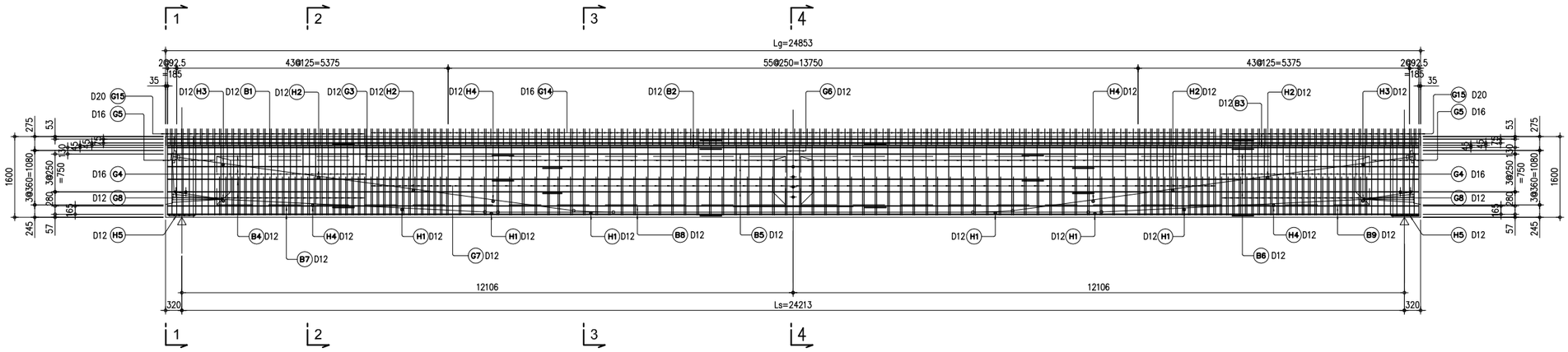

B SIDE VIEW
SCALE 1:50

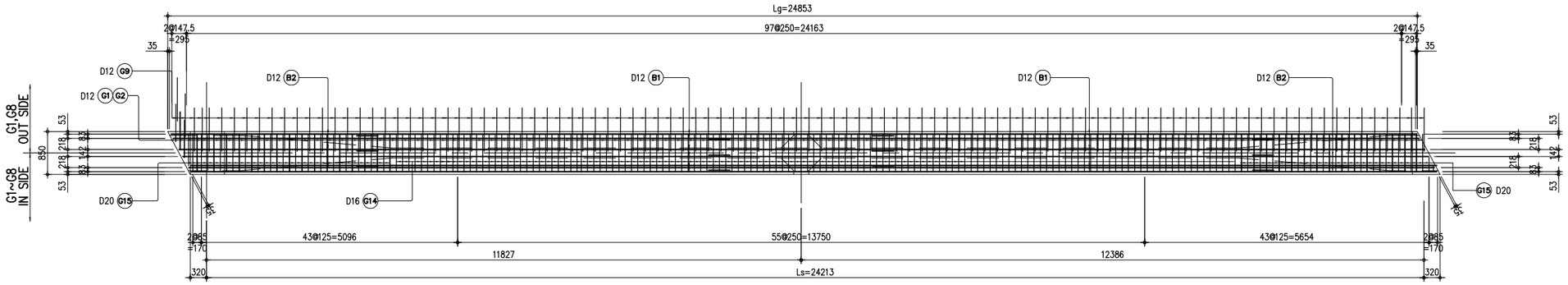

A PLAN
SCALE 1:50

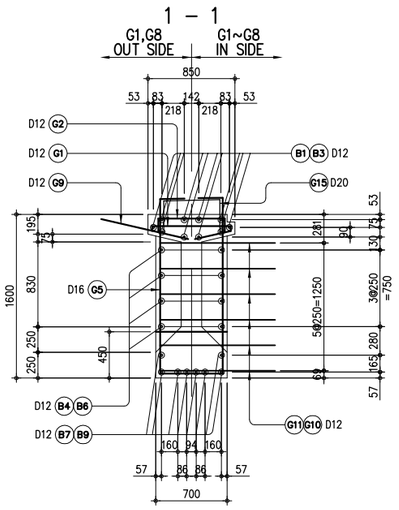

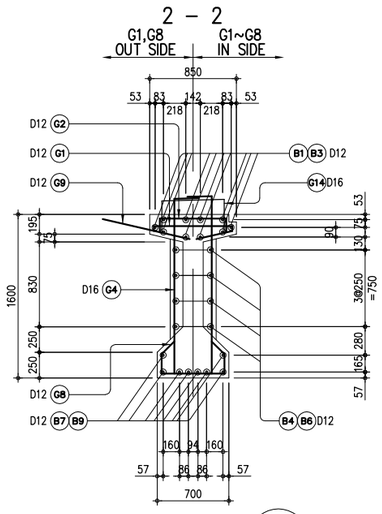

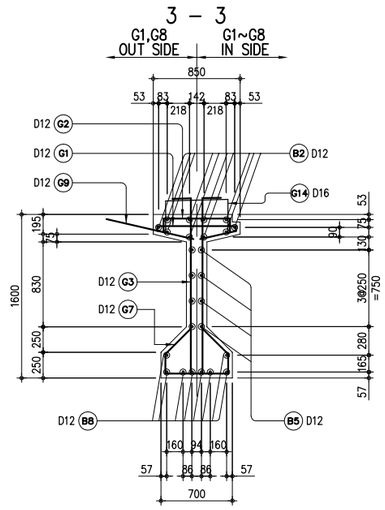

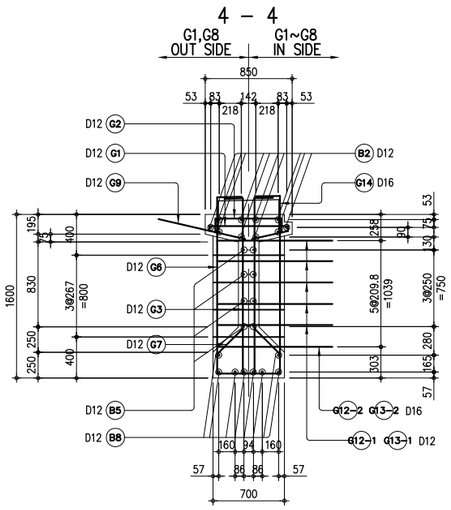

C GIRDER CROSS SECTION
SCALE 1:30

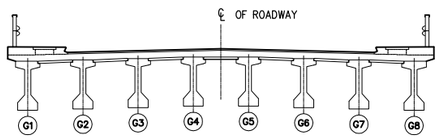

D LOCATION MAP
SCALE 1:100

THE DEMOCRATIC SOCIALIST REPUBLIC OF SRI LANKA
MINISTRY OF HIGHWAYS & ROAD DEVELOPMENT
Road Development Authority

JAPAN INTERNATIONAL COOPERATION AGENCY
ORIENTAL CONSULTANTS COMPANY LIMITED
in association with
PACIFIC CONSULTANTS INTERNATIONAL

No	REVISION	DATE

COLOMBO OUTER CIRCULAR HIGHWAY PROJECT
(NORTHERN SECTION 1)

OVERPASS BRIDGE NO.9
REINFORCEMENT BAR ARRANGEMENT OF GIRDER (1/2)

DESIGNED BY:	
CHECKED BY:	
APPROVED BY:	
DWG. NO.	K03-04

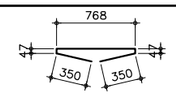

G1 146 – D12 x 1562

G2 146 – D12 x 940

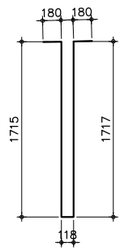

G3 80 – D12 x 3910

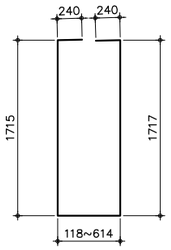

G4 48 – D16 x 4278
(AVERAGE)

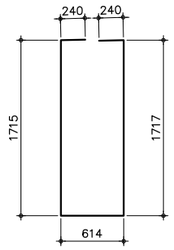

G5 18 – D16 x 4526

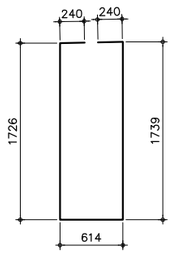

G6 2 – D12 x 4559

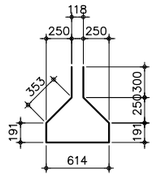

G7 80 – D12 x 2302

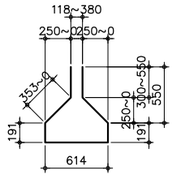

G8 48 – D12 x 2199
(AVERAGE)

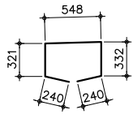

G14 128 – D16 x 1681

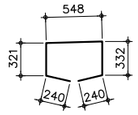

G15 18 – D20 x 1681

G9 102 – D12 x 900
(G1,G8)

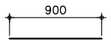

G10 12 – D12 x 900
(G1,G8)

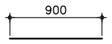

G12-1 10 – D12 x 900
(G1,G8)

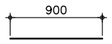

G12-2 3 – D16 x 900
(G1,G8)

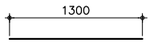

G11 12 – D12 x 1300
(G2~G7)

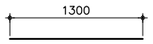

G13-1 10 – D12 x 1300
(G2~G7)

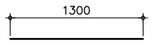

G13-2 3 – D16 x 1300
(G2~G7)

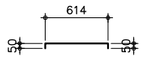

H1 12 – D12 x 714

H2 6 – D12 x 220

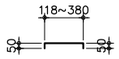

H3 4 – D12 x 249
(AVERAGE)

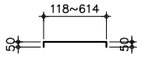

H4 2 – D12 x 331

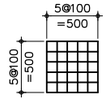

H5 24 – D12 x 500

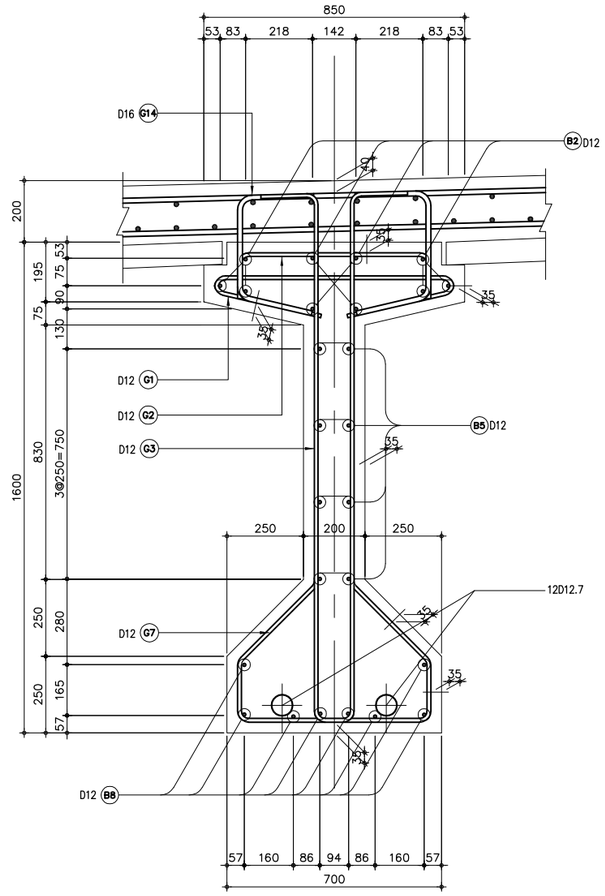

DETAIL OF GIRDER CENTER SCALE
SCALE 1:10

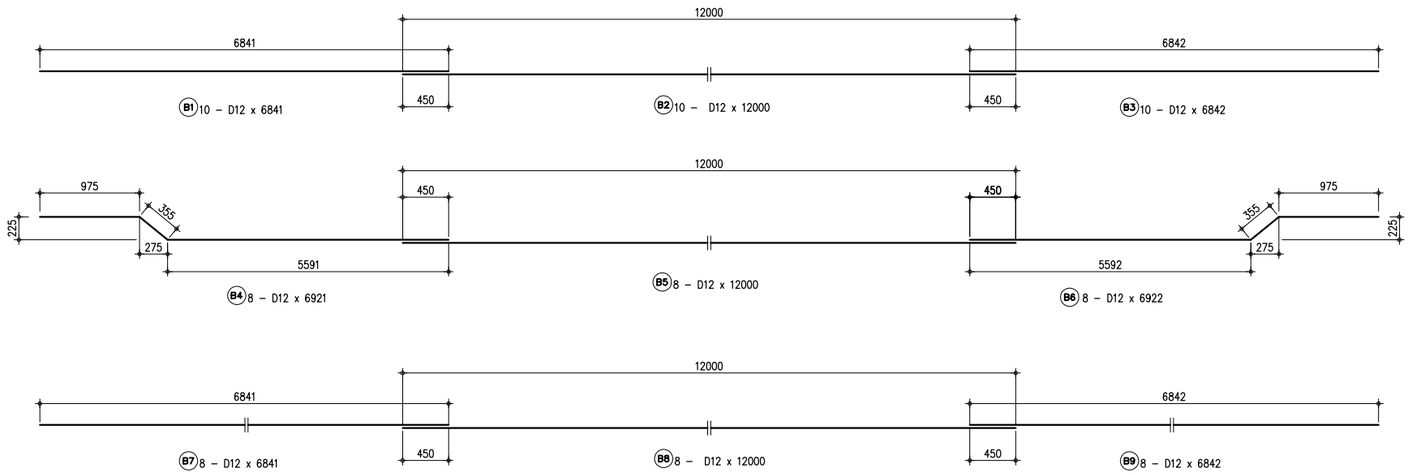

REINFORCEMENT OF GIRDER (2)
SCALE 1:30

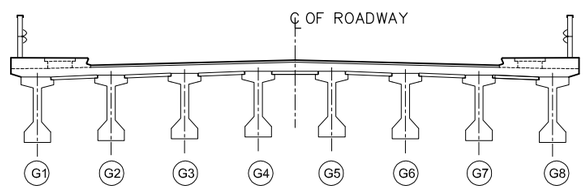

LOCATION MAP
SCALE 1:75

THE DEMOCRATIC SOCIALIST REPUBLIC OF SRI LANKA
MINISTRY OF HIGHWAYS & ROAD DEVELOPMENT
Road Development Authority

JICA JAPAN INTERNATIONAL COOPERATION AGENCY
ORIENTAL CONSULTANTS COMPANY LIMITED
in association with
PACIFIC CONSULTANTS INTERNATIONAL

No	REVISION	DATE

COLOMBO OUTER CIRCULAR HIGHWAY PROJECT
(NORTHERN SECTION 1)

OVERPASS BRIDGE NO.9
REINFORCEMENT BAR ARRANGEMENT OF GIRDER (2/2)

DESIGNED BY:	
CHECKED BY:	
APPROVED BY:	
DWG. NO.	K03-05

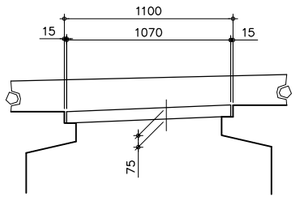

TYPE E

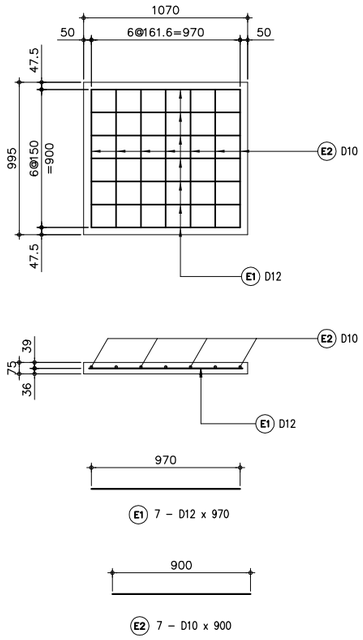

A – DETAIL OF PRECAST PLATE

SCALE 1:20

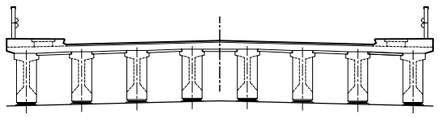

B – LOCATION MAP

SCALE 1:100

THE DEMOCRATIC SOCIALIST REPUBLIC OF SRI LANKA MINISTRY OF HIGHWAYS & ROAD DEVELOPMENT **Road Development Authority**	JICA JAPAN INTERNATIONAL COOPERATION AGENCY ORICONSUL ORIENTAL CONSULTANTS COMPANY LIMITED in association with PACIFIC CONSULTANTS INTERNATIONAL	No / REVISION / DATE	COLOMBO OUTER CIRCULAR HIGHWAY PROJECT (NORTHERN SECTION 1) OVERPASS BRIDGE NO.9 DETAILS OF PRECAST PLATES	DESIGNED BY: CHECKED BY: APPROVED BY: DWG. NO.	K03-06

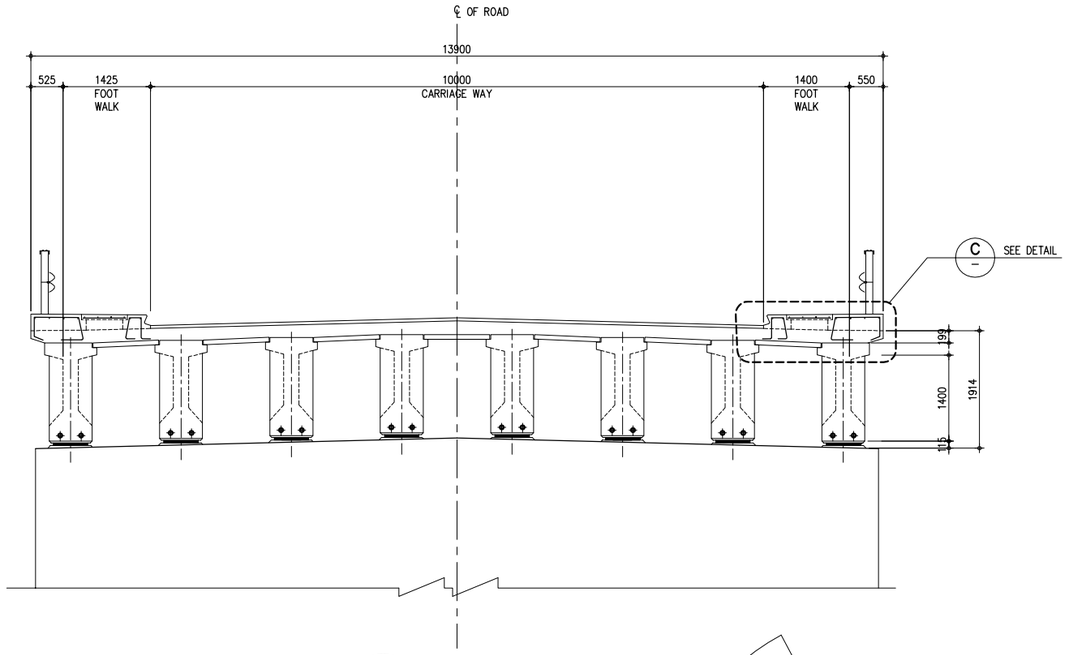

B SECTION
SCALE 1:50

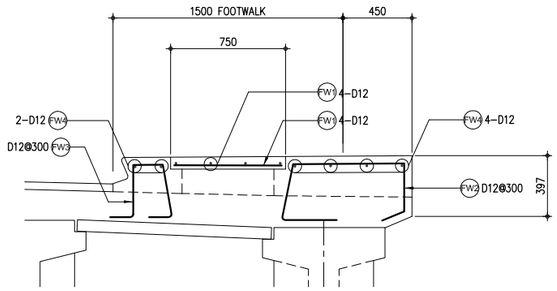

C DETAIL
SCALE 1:20

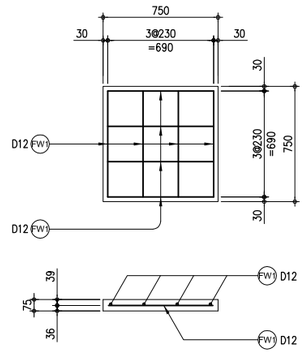

D DETAILS OF PRECAST PLATE
SCALE 1:20

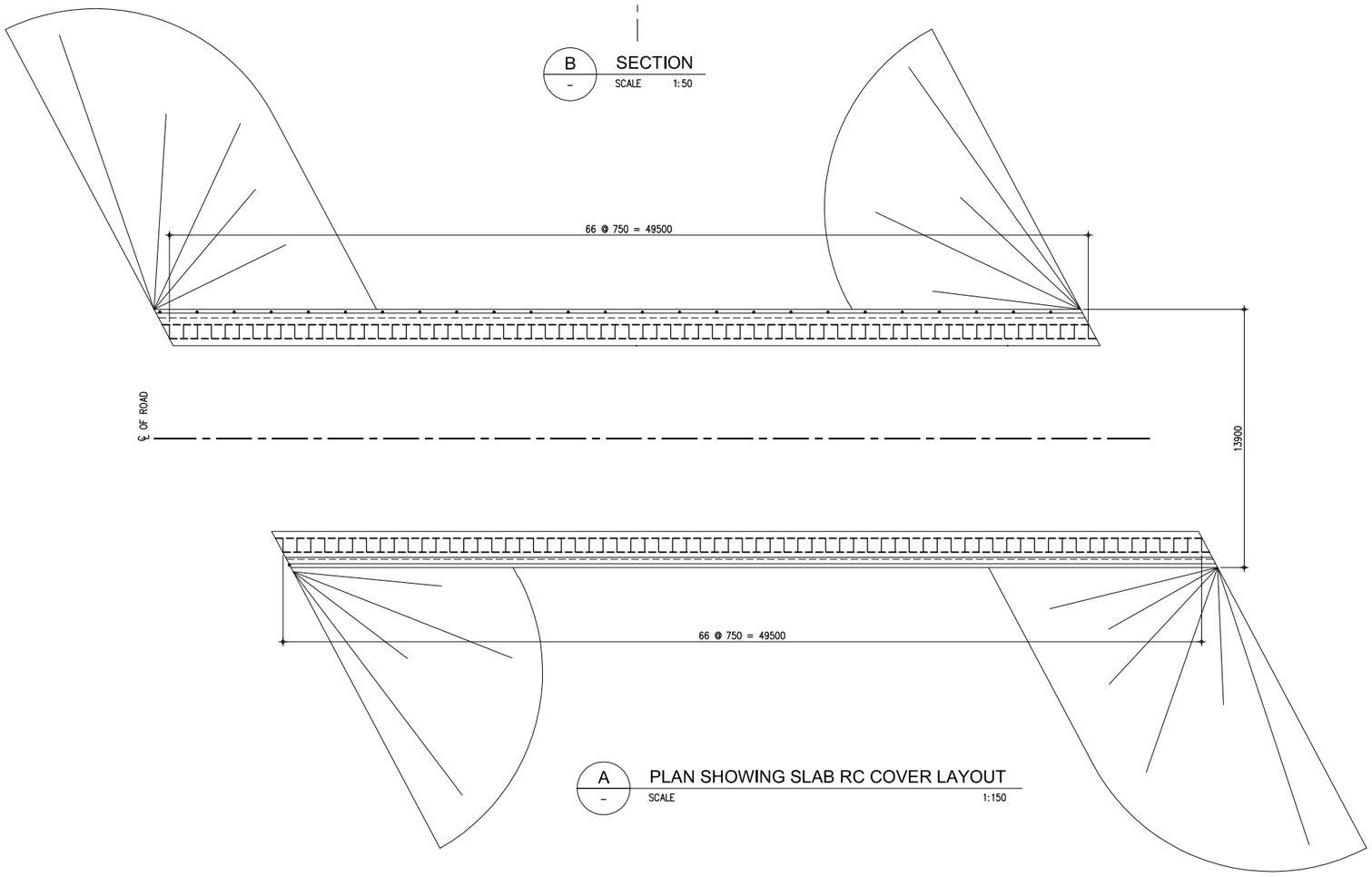

A PLAN SHOWING SLAB RC COVER LAYOUT
SCALE 1:150

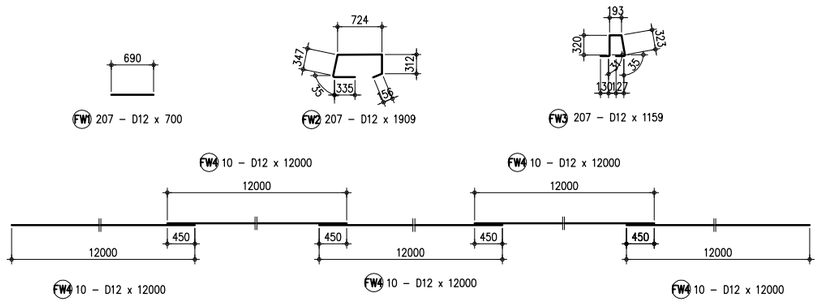

E BAR BENDING LAYOUT
SCALE 1:50

THE DEMOCRATIC SOCIALIST REPUBLIC OF SRI LANKA
MINISTRY OF HIGHWAYS & ROAD DEVELOPMENT
Road Development Authority

JAPAN INTERNATIONAL COOPERATION AGENCY
ORIENTAL CONSULTANTS COMPANY LIMITED
in association with
PACIFIC CONSULTANTS INTERNATIONAL

No	REVISION	DATE

COLOMBO OUTER CIRCULAR HIGHWAY PROJECT
(NORTHERN SECTION 1)

OVERPASS BRIDGE NO.9
FOOTWALK DETAIL

DESIGNED BY:	
CHECKED BY:	
APPROVED BY:	
DWG. NO.	K03-07

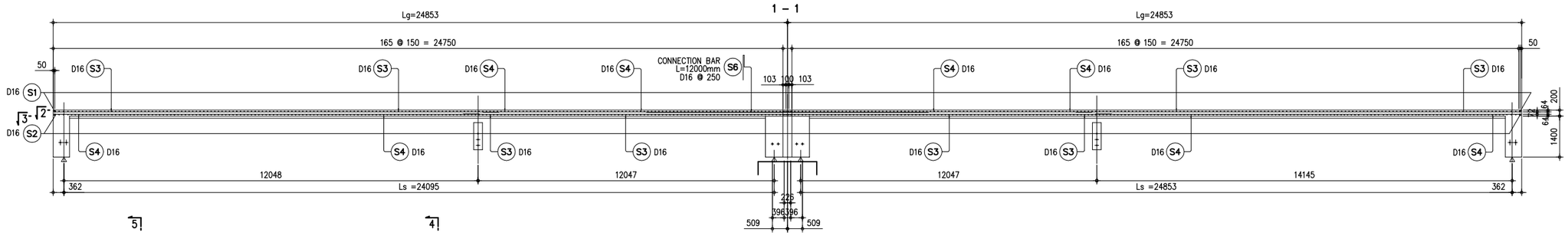

2 SIDE VIEW

SCALE 1:80

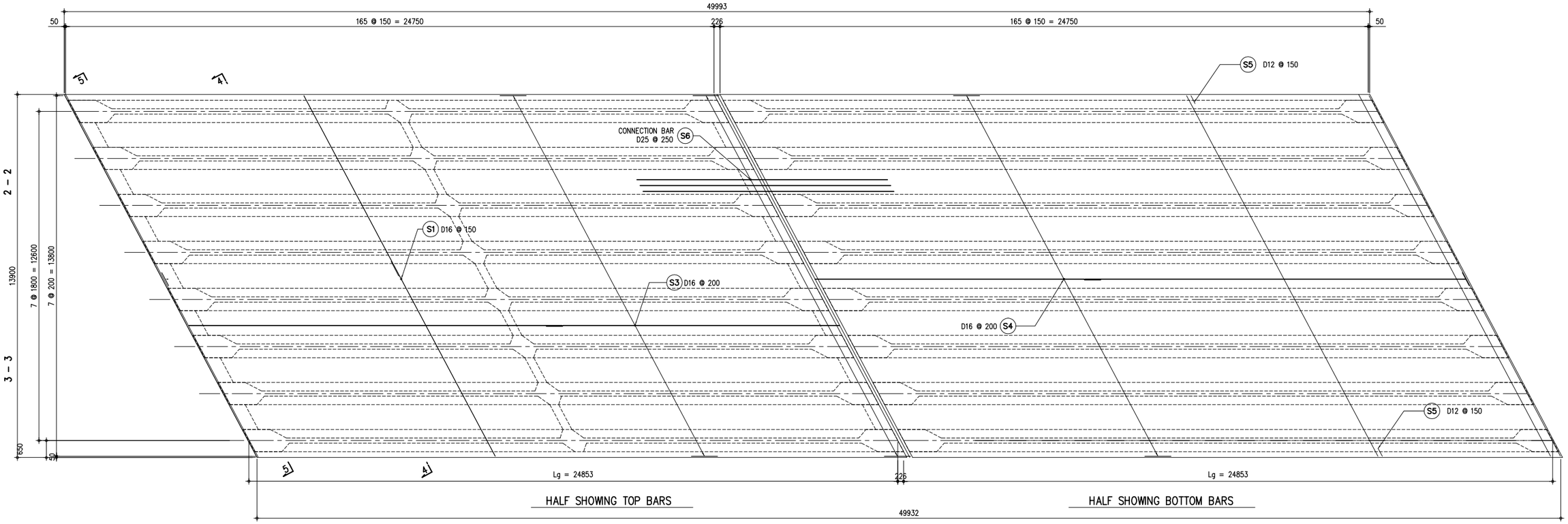

1 PLAN

SCALE 1:80

THE DEMOCRATIC SOCIALIST REPUBLIC OF SRI LANKA MINISTRY OF HIGHWAYS **Road Development Authority**	JICA JAPAN INTERNATIONAL COOPERATION AGENCY ORIENTAL CONSULTANTS COMPANY LIMITED in association with PACIFIC CONSULTANTS INTERNATIONAL	No / REVISION / DATE	THE OUTER CIRCULAR HIGHWAY TO THE CITY OF COLOMBO OVERPASS BRIDGE NO.9 REINFORCEMENT BAR ARRANGEMENT OF SLAB (1/2)	DESIGNED BY: CHECKED BY: APPROVED BY: DWG. NO.	K03-08

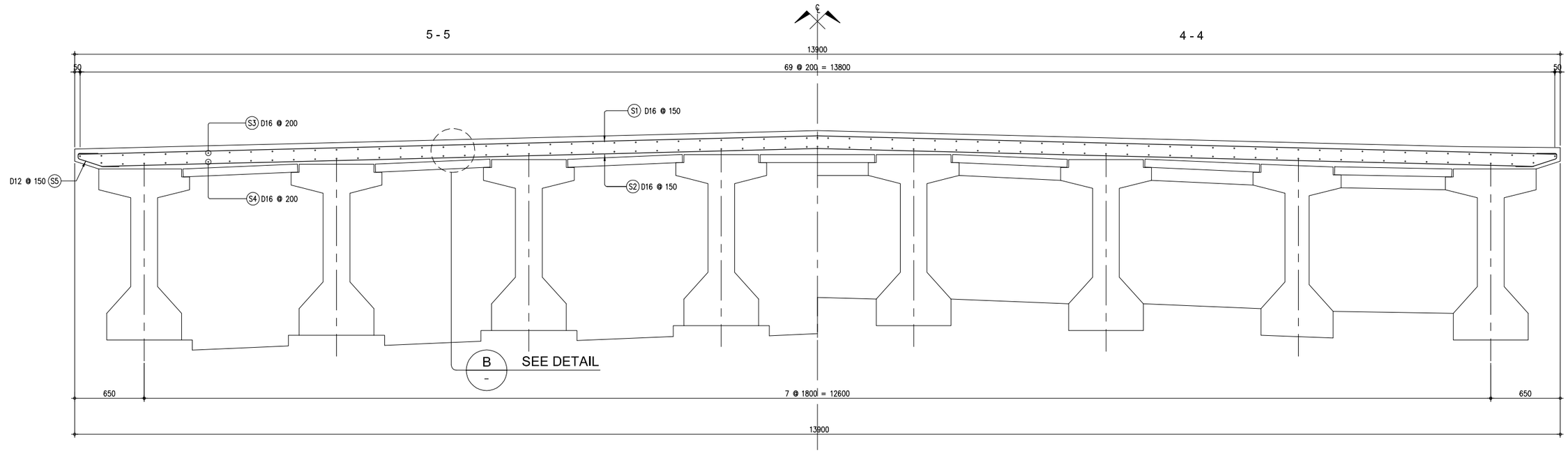

A
–
CROSS SECTION
SCALE 1:20

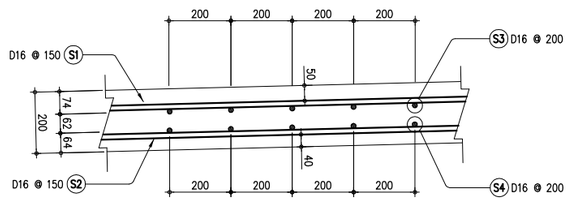

B
–
DETAIL
SCALE 1:10

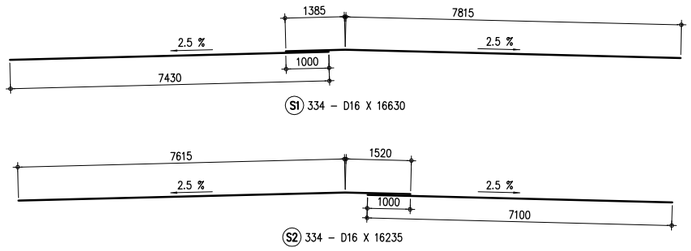

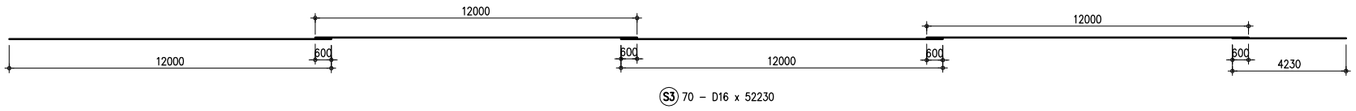

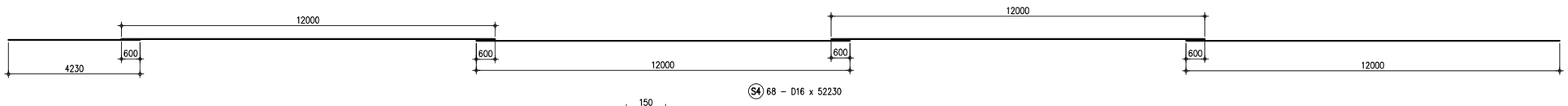

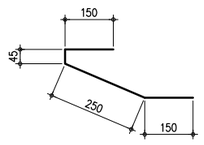

C
–
BAR BENDING LAYOUT
SCALE NTS

THE DEMOCRATIC SOCIALIST REPUBLIC OF SRI LANKA MINISTRY OF HIGHWAYS & ROAD DEVELOPMENT **Road Development Authority**	JICA JAPAN INTERNATIONAL COOPERATION AGENCY ORIENTAL CONSULTANTS COMPANY LIMITED in association with PACIFIC CONSULTANTS INTERNATIONAL	No	REVISION	DATE	COLOMBO OUTER CIRCULAR HIGHWAY PROJECT (NORTHERN SECTION 1) OVERPASS BRIDGE NO.9 REINFORCEMENT BAR ARRANGEMENT OF SLAB (2/2)	DESIGNED BY: CHECKED BY: APPROVED BY: DWG. NO.	 K03-09

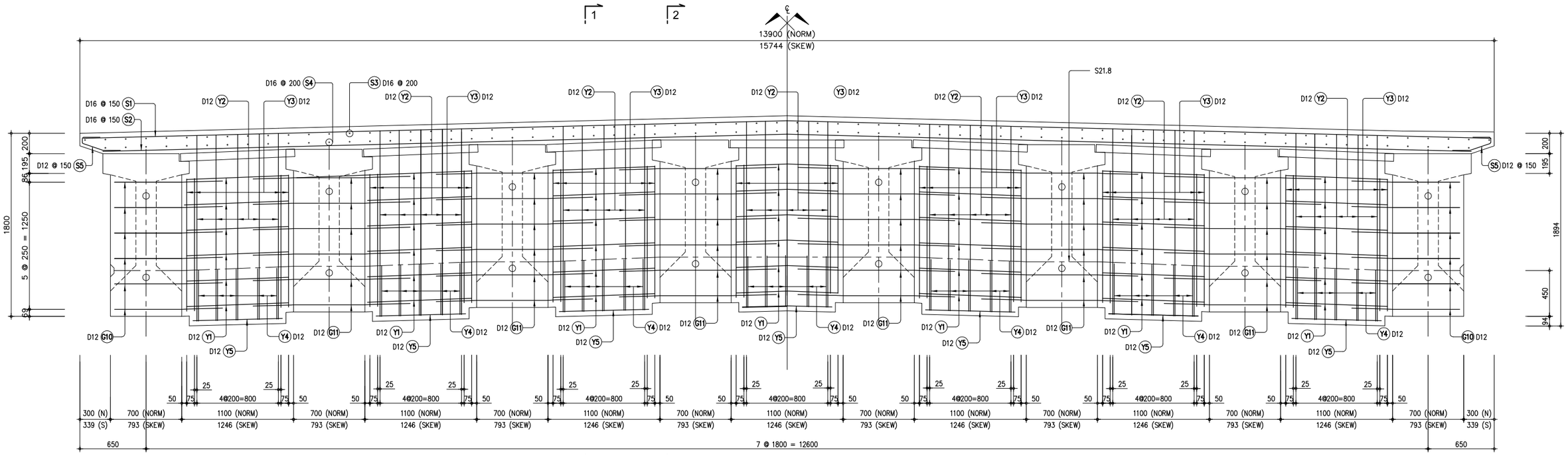

A CROSS SECTION
SCALE 1:20

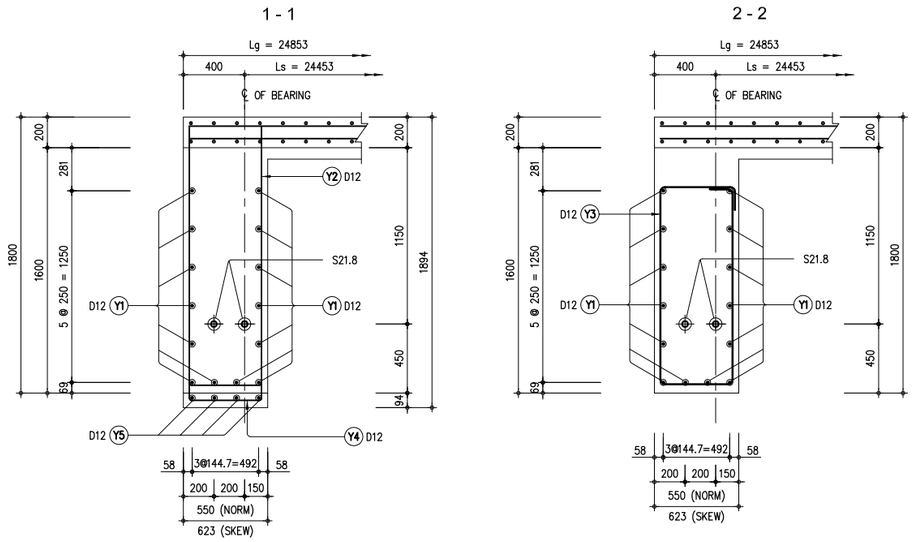

B SIDE VIEW
SCALE 1:20

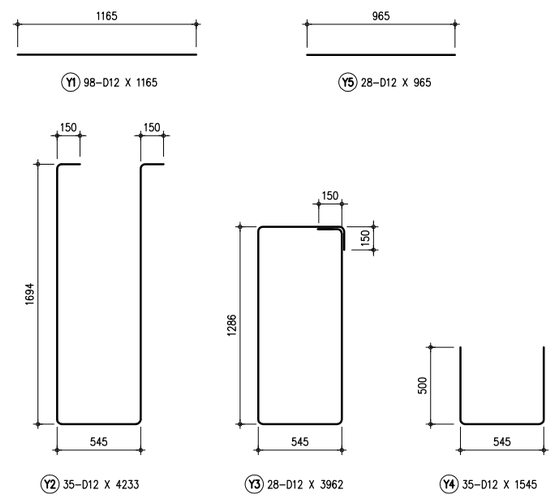

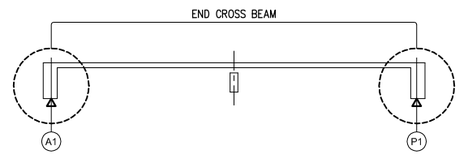

E LOCATION MAP
SCALE 1:30

THE DEMOCRATIC SOCIALIST REPUBLIC OF SRI LANKA
MINISTRY OF HIGHWAYS & ROAD DEVELOPMENT
Road Development Authority

JICA JAPAN INTERNATIONAL COOPERATION AGENCY
ORIENTAL CONSULTANTS COMPANY LIMITED
in association with
PACIFIC CONSULTANTS INTERNATIONAL

No	REVISION	DATE

COLOMBO OUTER CIRCULAR HIGHWAY PROJECT
(NORTHERN SECTION 1)

OVERPASS BRIDGE NO.9
REINFORCEMENT BAR ARRANGEMENT OF END CROSS BEAM

DESIGNED BY:	
CHECKED BY:	
APPROVED BY:	
DWG. NO.	K03-10

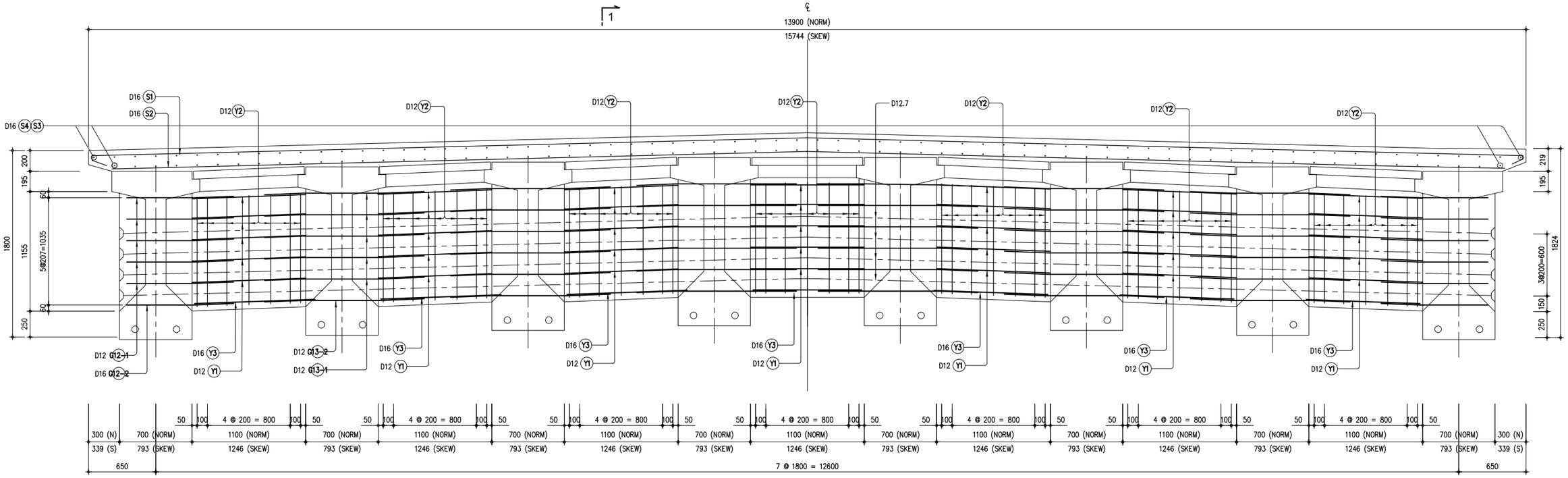

A CROSS SECTION
SCALE 1:20

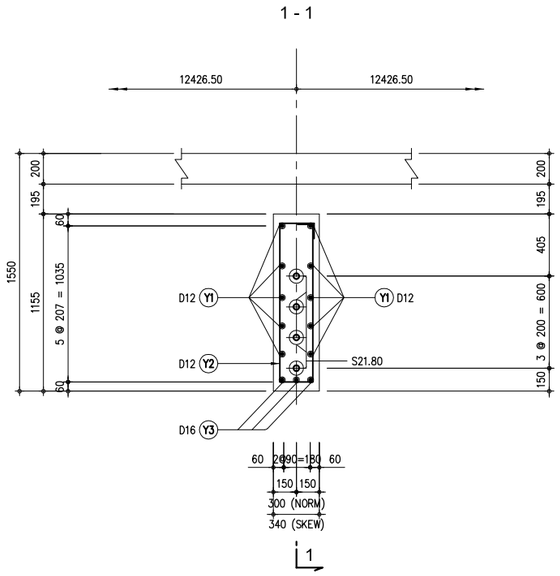

B SIDE VIEW
SCALE 1:20

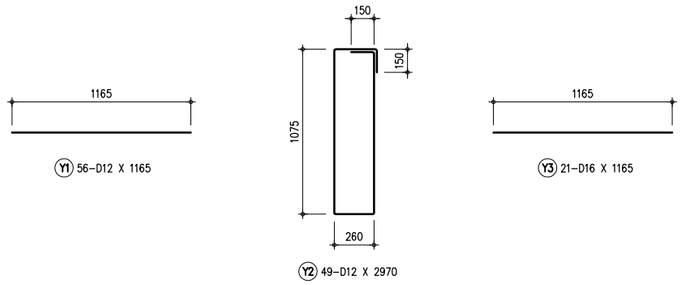

C BAR BENDING LAYOUT
SCALE 1:20

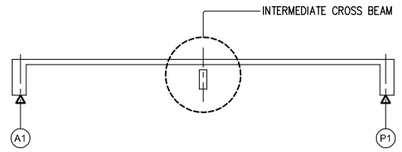

D LOCATION MAP
SCALE NTS

THE DEMOCRATIC SOCIALIST REPUBLIC OF SRI LANKA
MINISTRY OF HIGHWAYS & ROAD DEVELOPMENT
Road Development Authority

JICA JAPAN INTERNATIONAL COOPERATION AGENCY
ORICONSUL ORIENTAL CONSULTANTS COMPANY LIMITED
in association with
PACIFIC CONSULTANTS INTERNATIONAL

No	REVISION	DATE

COLOMBO OUTER CIRCULAR HIGHWAY PROJECT
(NORTHERN SECTION 1)

OVERPASS BRIDGE NO.9
REINFORCEMENT BAR ARRANGEMENT OF INTERMEDIATE CROSS BEAM

DESIGNED BY:	
CHECKED BY:	
APPROVED BY:	
DWG. NO.	K03-11

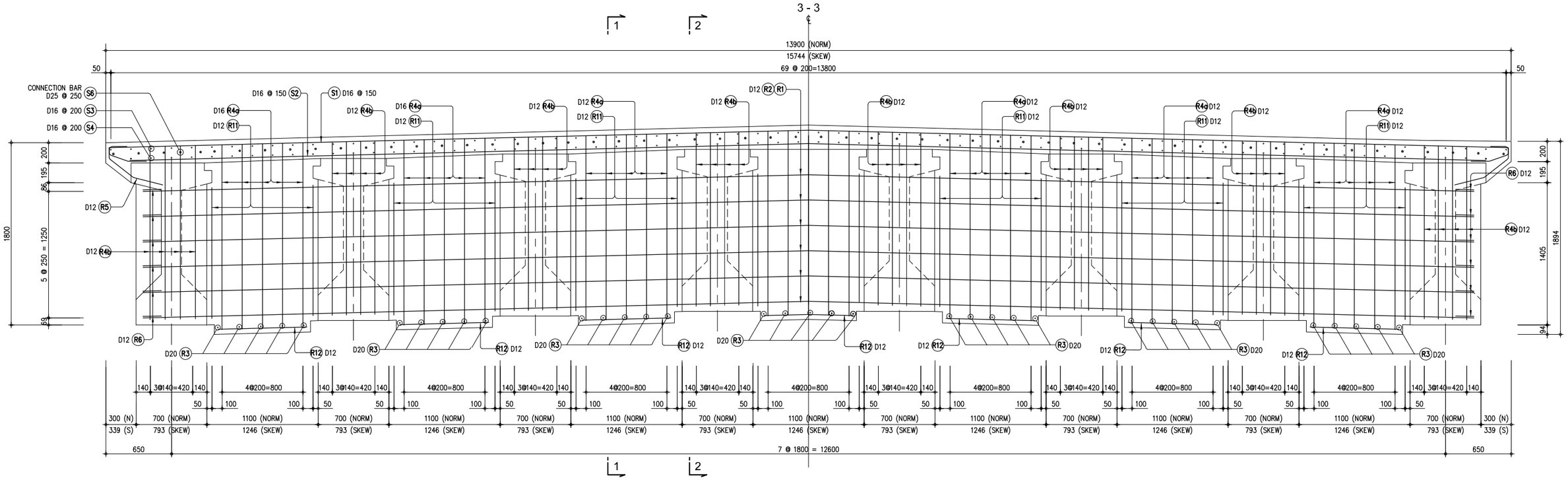

A CROSS SECTION
SCALE 1:20

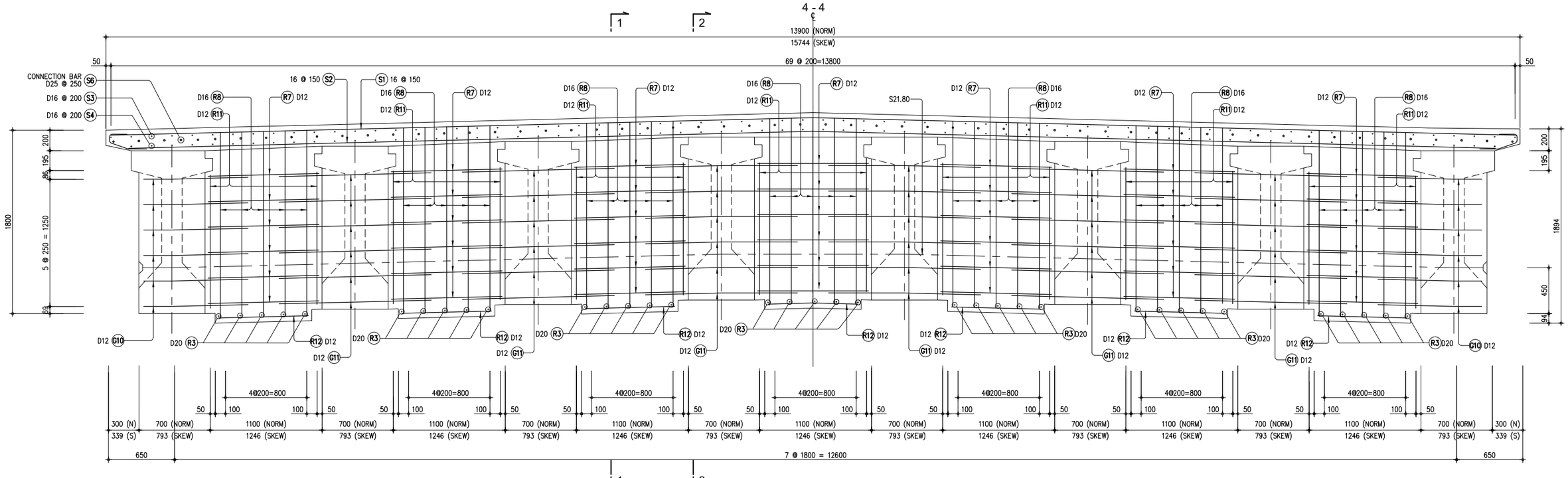

A2 CROSS SECTION
SCALE 1:20

THE DEMOCRATIC SOCIALIST REPUBLIC OF SRI LANKA
MINISTRY OF HIGHWAYS & ROAD DEVELOPMENT
Road Development Authority

JAPAN INTERNATIONAL COOPERATION AGENCY
ORIENTAL CONSULTANTS COMPANY LIMITED
in association with
PACIFIC CONSULTANTS INTERNATIONAL

No	REVISION	DATE

COLOMBO OUTER CIRCULAR HIGHWAY PROJECT
(NORTHERN SECTION 1)

OVERPASS BRIDGE NO.9
SLAB AND GIRDER CONNECTION DETAILS (1/2)

DESIGNED BY:	
CHECKED BY:	
APPROVED BY:	
DWG. NO.	K03-12

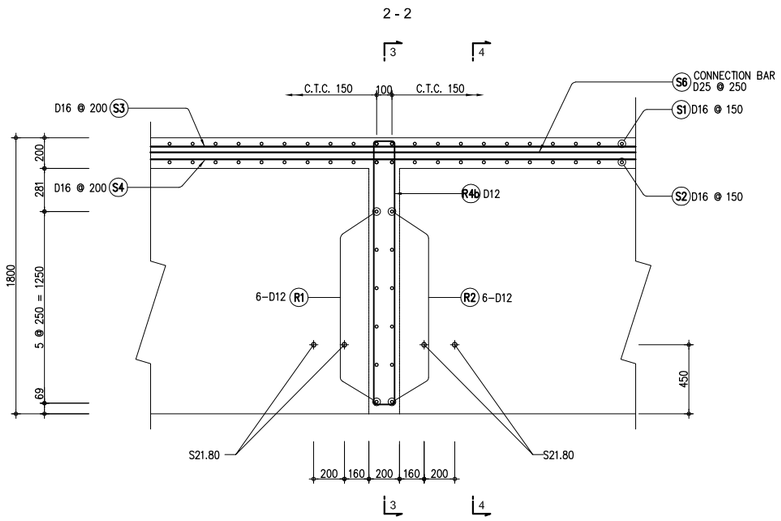

B SIDE VIEW
SCALE 1:20

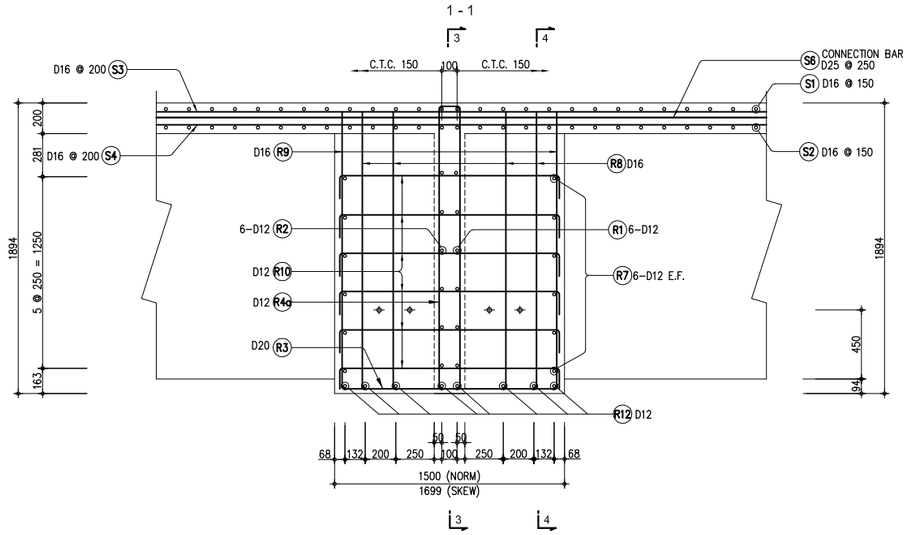

C SIDE VIEW
SCALE 1:20

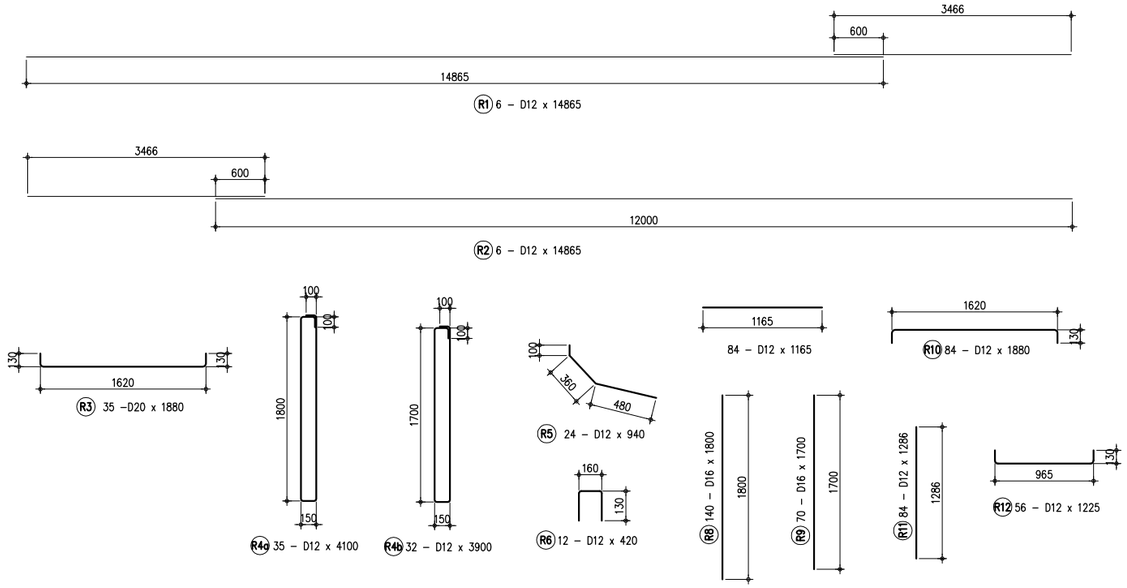

D BAR BENDING LAYOUT
SCALE NTS

THE DEMOCRATIC SOCIALIST REPUBLIC OF SRI LANKA MINISTRY OF HIGHWAYS & ROAD DEVELOPMENT **Road Development Authority**	JICA JAPAN INTERNATIONAL COOPERATION AGENCY ORIENTAL CONSULTANTS COMPANY LIMITED in association with PACIFIC CONSULTANTS INTERNATIONAL	No	REVISION	DATE	COLOMBO OUTER CIRCULAR HIGHWAY PROJECT (NORTHERN SECTION 1) OVERPASSBRIDGE No. 09 SLAB AND GIRDER CONNECTION DETAILS (2/2)	DESIGNED BY: CHECKED BY: APPROVED BY: DWG. NO. K03-13

ESTIMATED QUANTITIES FOR SUPERSTRUCTURE

ESTIMATED QUANTITIES FOR SUPERSTRUCTURE

REINFORCING BARS

LOCATION	BAR MARK	SPACING	QTY. (pcs)	SIZE (mm)	DIMENSION mm (OUT TO OUT) a	b	c	d	e	f	g	LENGTH PER BAR (mm)	TOTAL LENGTH (m)	UNIT WEIGHT (kg/m)	TOTAL WEIGHT (kg)	CONCRETE VOLUME (m^3)
END CROSS BEAM (ABUTMENTS)	Y1	AS SHOWN	98	12	1165							1165	114.17	0.888	101.38	
	Y2	AS SHOWN	35	12	150	1694	545	1694	150			4233	148.16	0.888	131.56	
	Y3	AS SHOWN	28	12	150	545	1286	545	1286	150		3962	110.94	0.888	98.51	
	Y4	AS SHOWN	35	12	500	545	500					1545	54.08	0.888	48.02	
	Y5	AS SHOWN	28	12	965							965	27.02	0.888	23.99	
										A. TOTAL QUANTITY FOR END DIAPPHRAGM					403.47	
										B. TOTAL NUMBER OF END DIAPHRAGM					4.00	
										C. SUB TOTAL QUANTITY END DIAPHRAGM					1,613.87	30.664
INTERMEDIATE CROSS BEAM	Y1	AS SHOWN	70	12	1165							1165	81.55	0.888	72.42	
	Y2	AS SHOWN	49	12	150	260	1075	260	1075	150		2970	145.53	0.888	129.23	
	Y3	AS SHOWN	21	16	1165							1165	24.47	1.579	38.63	
										A. TOTAL QUANTITY PER INTERMEDIATE					240.28	
										B. TOTAL NUMBER OF INTERMEDIATE DIAPRAGMS					2.00	
										C. SUB TOTAL QUANTITY OF INTERMEDIATE DIAPHRAMS					480.55	5.330
SLAB CONNECTION AND CROSS BEAM	R1	AS SHOWN	6	12	12000	3466						15466	92.80	0.888	82.40	
	R2	AS SHOWN	6	12	3466	12000						15466	92.80	0.888	82.40	
	R3	AS SHOWN	35	20	130	1620	130					1880	65.80	2.466	162.26	
	R4a	AS SHOWN	35	12	100	150	1800	150	1800	100		4100	143.50	0.888	127.43	
	R4b	AS SHOWN	32	12	100	150	1700	150	1700	100		3900	124.80	0.888	110.82	
	R5	AS SHOWN	24	12	100	360	480					940	22.56	0.888	20.03	
	R6	AS SHOWN	12	12	130	160	130					420	5.04	0.888	4.48	
	R7	AS SHOWN	84	12	1165							1165	97.86	0.888	86.90	
	R8	AS SHOWN	140	16	1800							1800	252.00	1.579	397.91	
	R9	AS SHOWN	70	16	1700							1700	119.00	1.579	187.90	
	R10	AS SHOWN	84	12	130	1620	130					1880	157.92	0.888	140.23	
	R11	AS SHOWN	84	12	1286							1286	108.02	0.888	95.93	
	R12	AS SHOWN	56	12	130	965	130					1225	68.60	0.888	60.92	
								A. TOTAL QUANTITY OF SLAB CONNECTION AND CROSS BEAM							1,559.61	
								B. TOTAL NUMBER OF SLAB CONNECTION AND CROSS BEAM							1.00	
								C. SUB-TOTAL QUANTITY OF SLAB CONNECTION AND CROSS BEAM (A x B)							1,559.61	3.824
SLAB	S1	AS SHOWN	334	16	7430	9200						16630	5554.42	1.579	8,770.43	
	S2	AS SHOWN	334	16	9135	7100						16235	5422.49	1.579	8,562.11	
	S3	AS SHOWN	70	16	12000	12000	12000	12000	4230			52230	3656.10	1.579	5,772.98	
	S4	AS SHOWN	68	16	4230	12000	12000	12000	12000			52230	3551.64	1.579	5,608.04	
	S5	AS SHOWN	668	12	150	45	250	150				595	397.46	0.888	352.94	
	S6	AS SHOWN	56	25	5500	12000						17500	980.00	3.854	3,776.92	
										TOTAL QUANTITY					32,843.43	
										SUB-TOTAL QUANTITY FOR SLAB					32,843.43	138.137
FOOTWALK	FW1	AS SHOWN	528	12	700							700	369.60	0.888	328.20	
	FW2	AS SHOWN	168	12	335	35	347	724	312	156		1909	320.71	0.888	284.79	
	FW3	AS SHOWN	168	12	130	31	320	193	323	35	127	1159	194.71	0.888	172.90	
	FW4	AS SHOWN	6	12	12000	12000	12000	12000	3800			51800	310.80	0.888	275.99	
										A. TOTAL QUANTITY PER SPAN					1,061.88	17.157
										B. TOTAL NUMBER OF SPANS					2	
										C. SUB TOTAL QUANTITY FOR SIDEWALKS = (AxB)					2,123.76	34.314
															38,530.28	212.269

THE DEMOCRATIC SOCIALIST REPUBLIC OF SRI LANKA
MINISTRY OF HIGHWAYS & ROAD DEVELOPMENT
Road Development Authority

JICA JAPAN INTERNATIONAL COOPERATION AGENCY
ORICONSUL ORIENTAL CONSULTANTS COMPANY LIMITED in association with PACIFIC CONSULTANTS INTERNATIONAL

No	REVISION	DATE

COLOMBO OUTER CIRCULAR HIGHWAY PROJECT (NORTHERN SECTION 1)

OVERPASS BRIDGE NO. 9
ESTIMATED QUANTITIES SUPERSTRUCTURE

DESIGNED BY:
CHECKED BY:
APPROVED BY:
DWG. NO. K03-14

DIMENSION DETAILS FOR ABUTMENT-A1 (Scale 1:100)

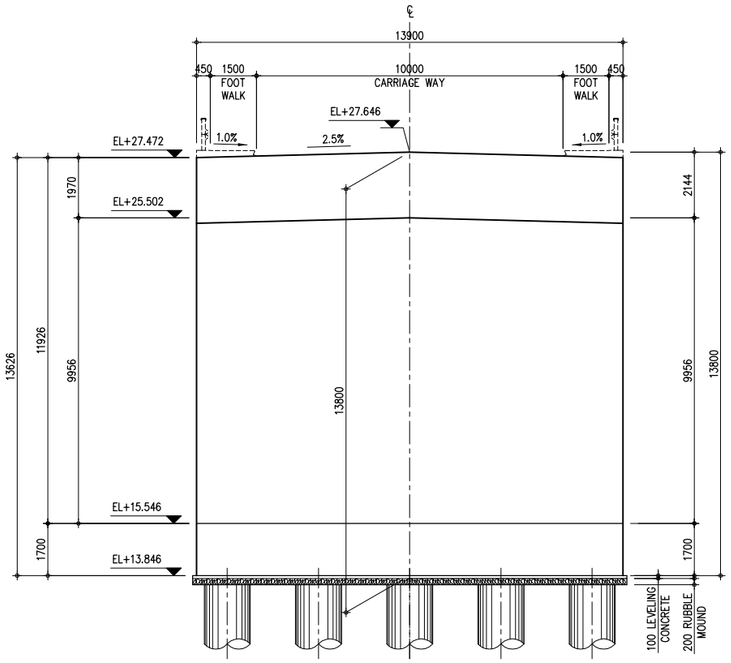

1 - 1

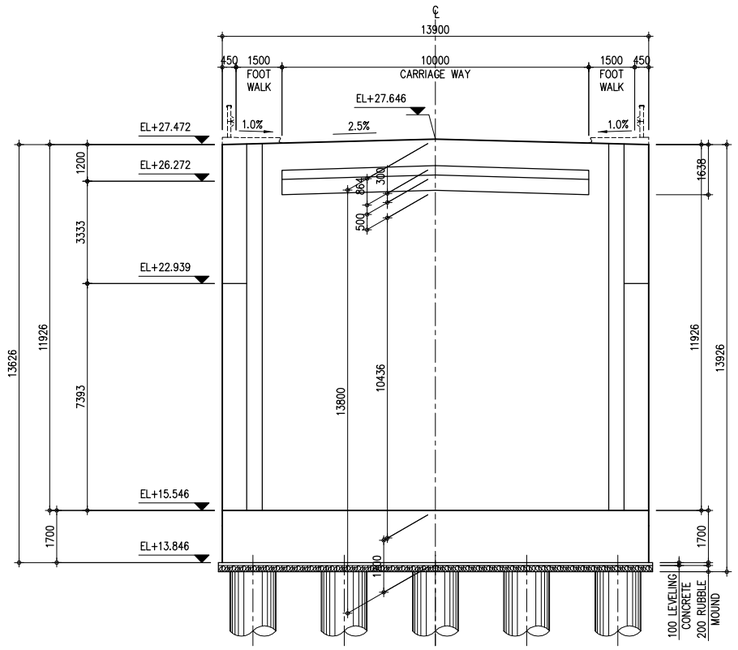

2 - 2

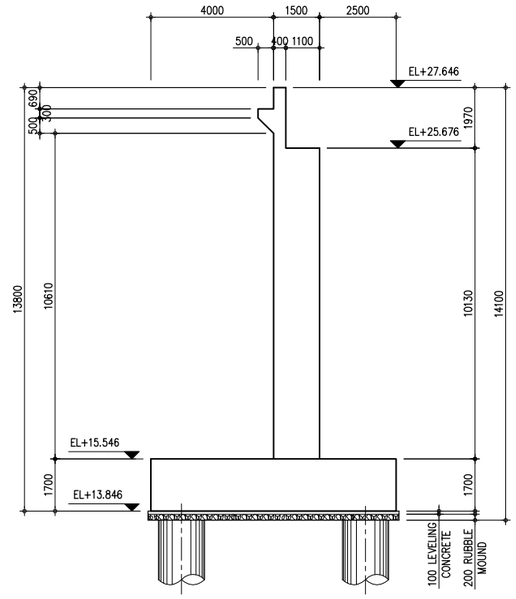

3 - 3

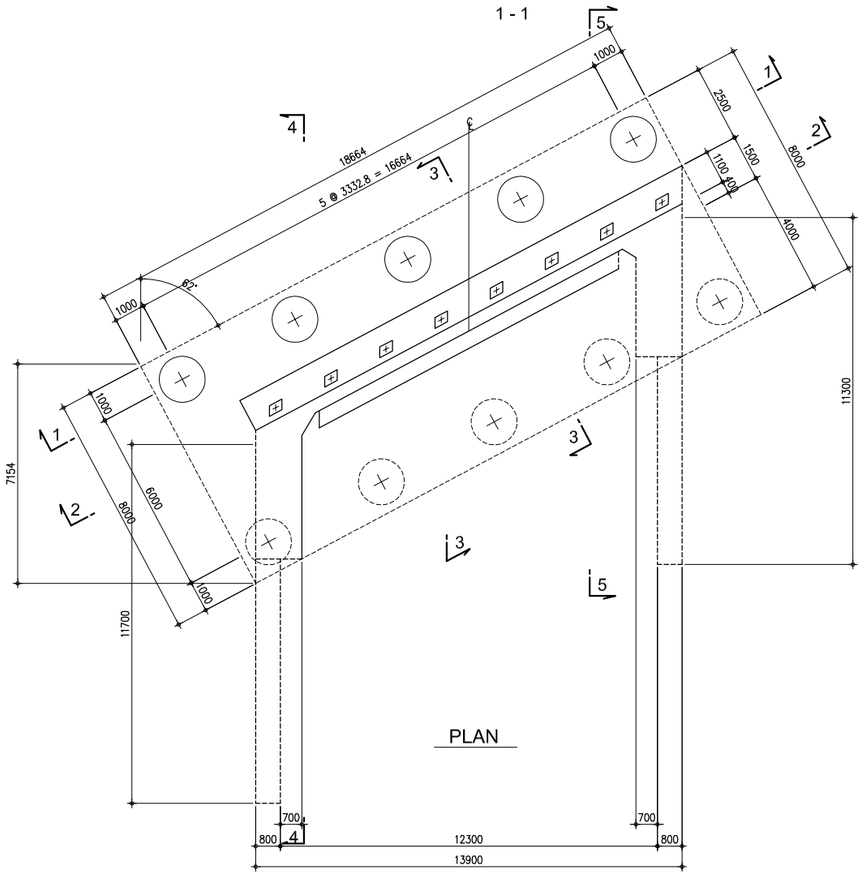

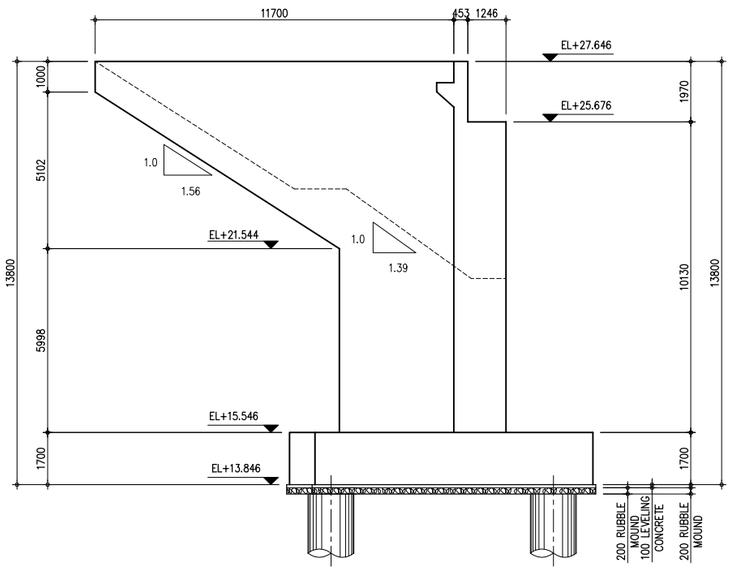

4 - 4

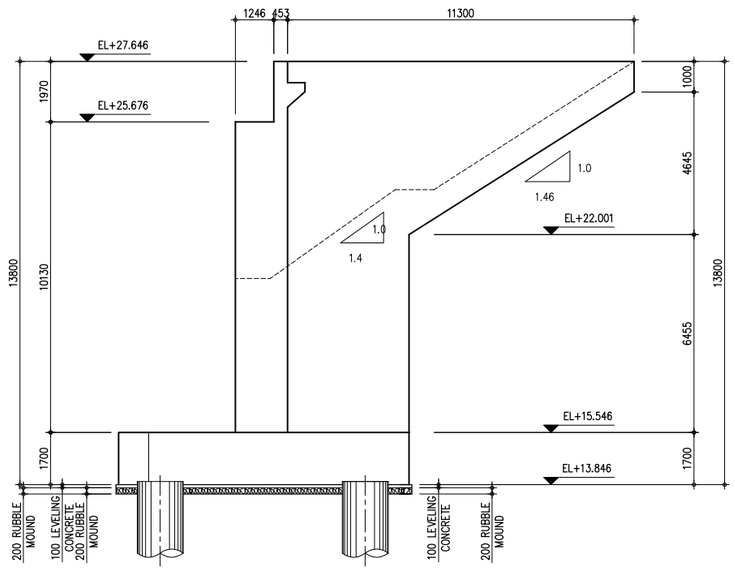

5 - 5

THE DEMOCRATIC SOCIALIST REPUBLIC OF SRI LANKA
MINISTRY OF HIGHWAYS & ROAD DEVELOPMENT
Road Development Authority

JICA JAPAN INTERNATIONAL COOPERATION AGENCY
ORIENTAL CONSULTANTS COMPANY LIMITED
in association with
PACIFIC CONSULTANTS INTERNATIONAL

No	REVISION	DATE

COLOMBO OUTER CIRCULAR HIGHWAY PROJECT
(NORTHERN SECTION 1)

OVERPASS BRIDGE NO.9
DIMENSION DETAILS FOR ABUTMENT-A1

DESIGNED BY:	
CHECKED BY:	
APPROVED BY:	
DWG. NO.	K03-15

DIMENSION DETAILS FOR PIER-1 (Scale 1:100)

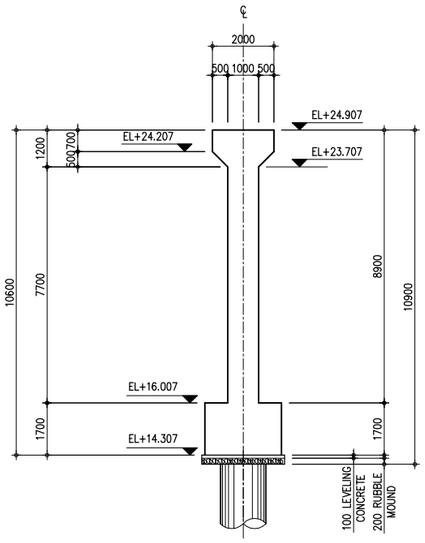

1 - 1

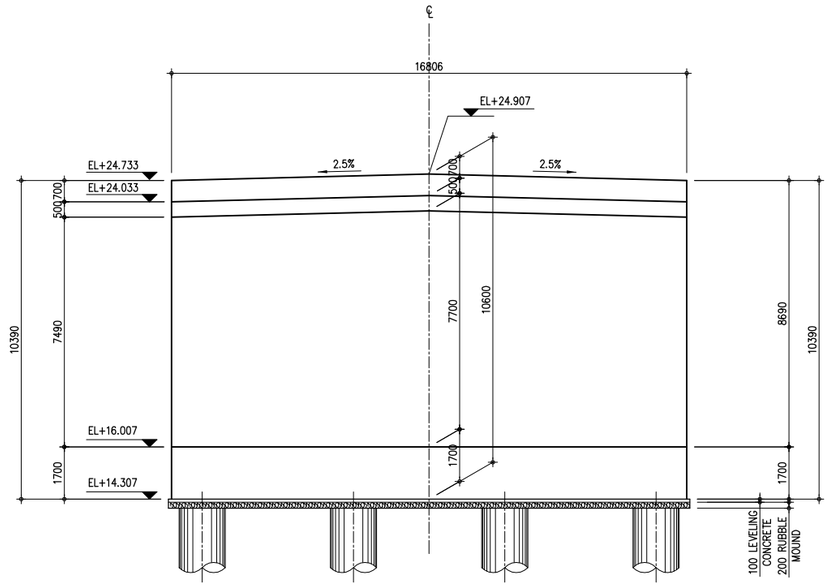

2 - 2

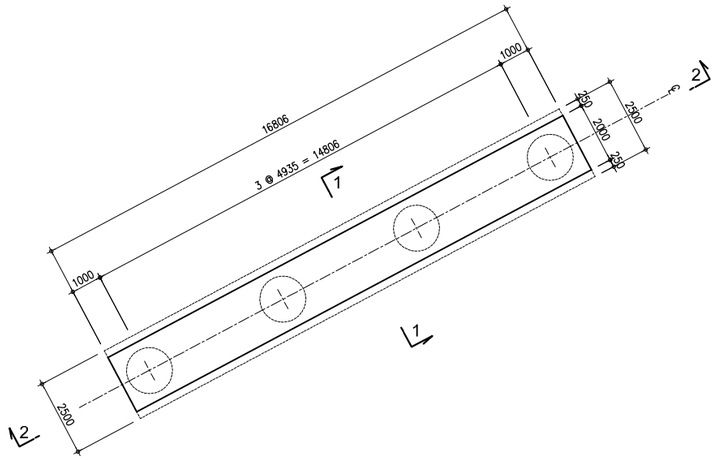

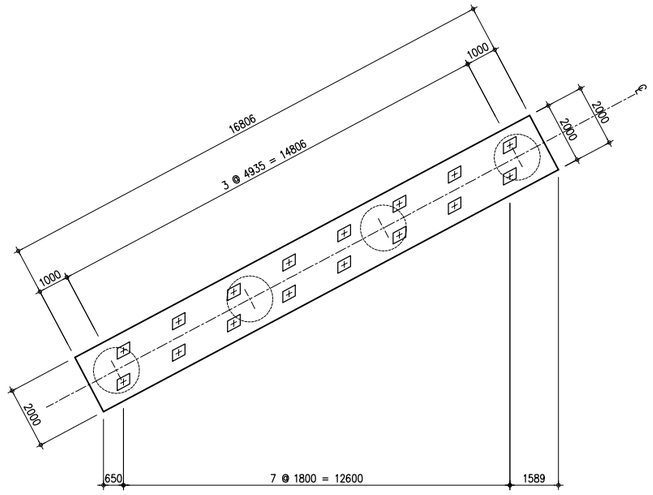

PLAN OF BEARING PAD

THE DEMOCRATIC SOCIALIST REPUBLIC OF SRI LANKA MINISTRY OF HIGHWAYS & ROAD DEVELOPMENT **Road Development Authority**	JICA JAPAN INTERNATIONAL COOPERATION AGENCY ORICONSUL ORIENTAL CONSULTANTS COMPANY LIMITED in association with PACIFIC CONSULTANTS INTERNATIONAL	No / REVISION / DATE	COLOMBO OUTER CIRCULAR HIGHWAY PROJECT (NORTHERN SECTION 1) OVERPASS BRIDGE NO.9 DIMENSION DETAILS FOR PIER-1	DESIGNED BY: CHECKED BY: APPROVED BY: DWG. NO.	K03-16

DIMENSION DETAILS FOR ABUTMENT-A2 (Scale 1:100)

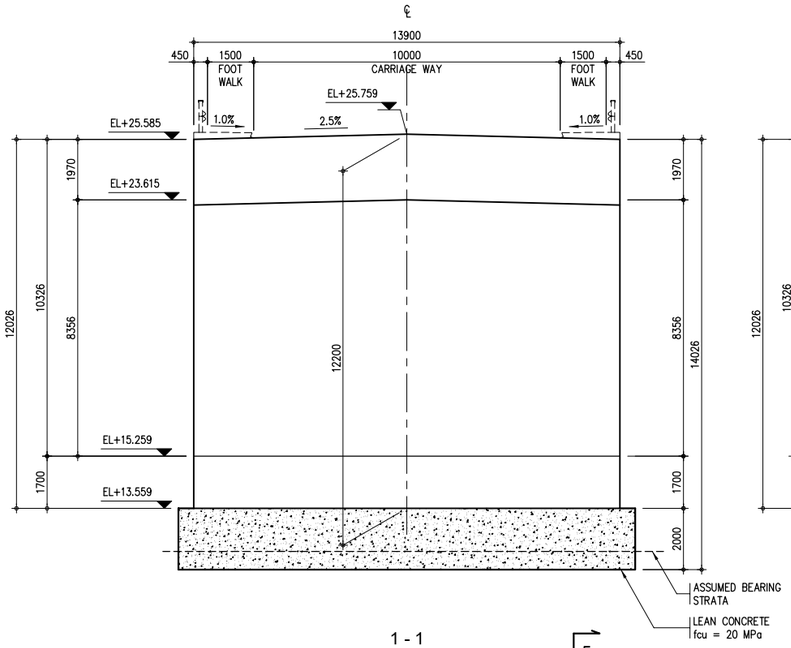

1 - 1

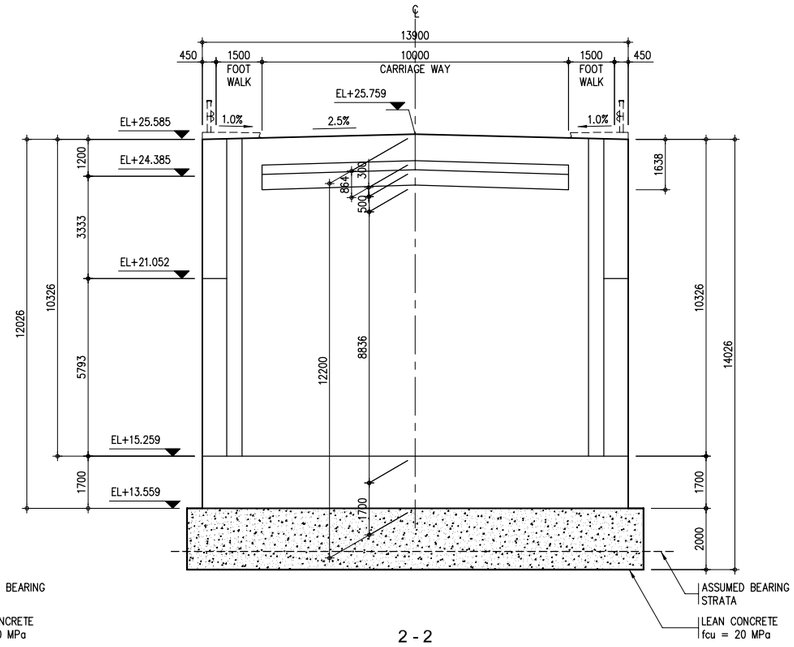

2 - 2

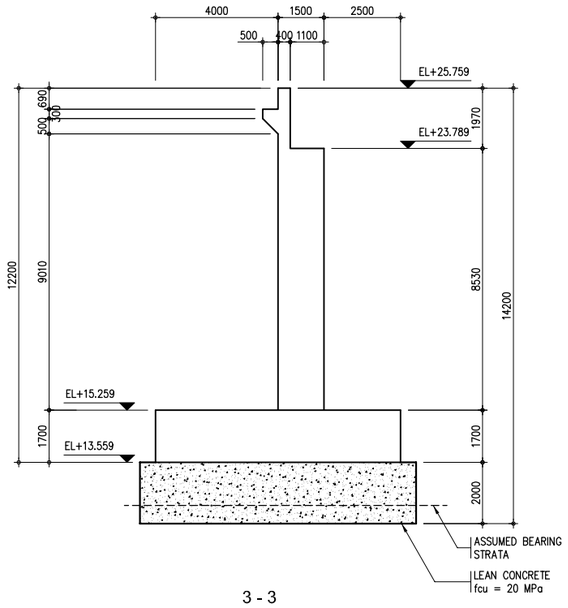

3 - 3

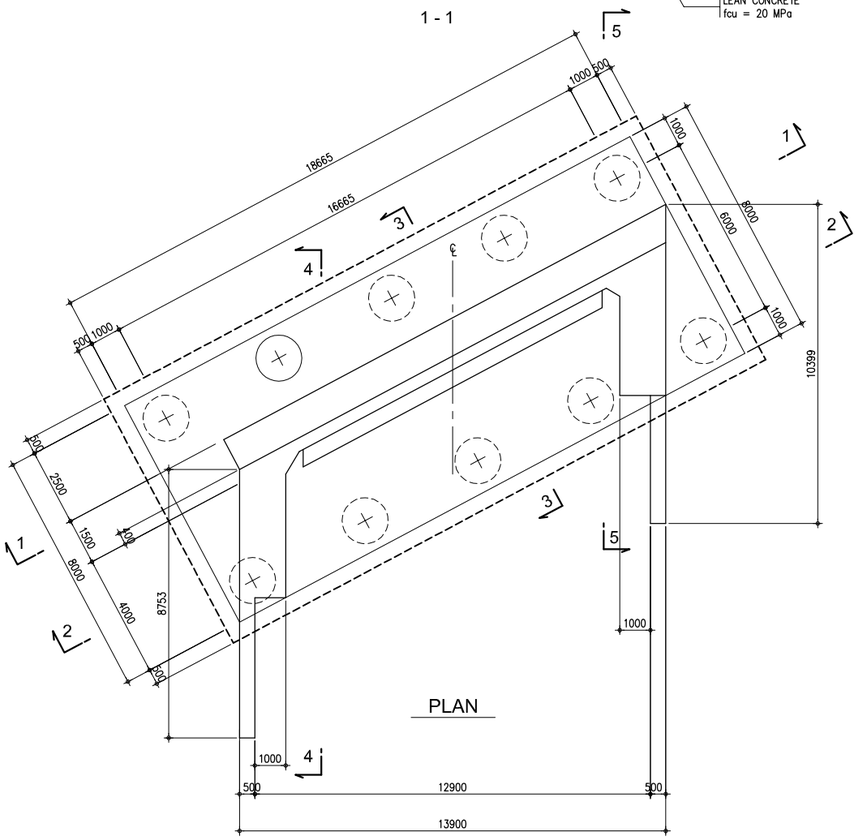

PLAN

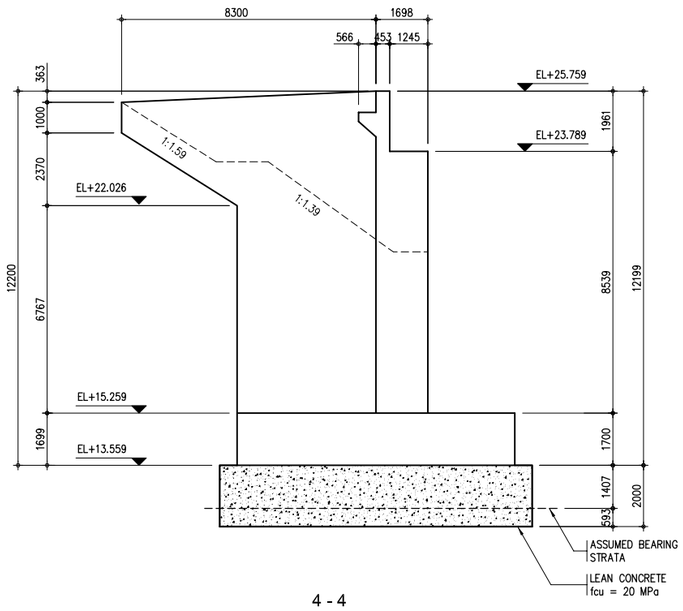

4 - 4

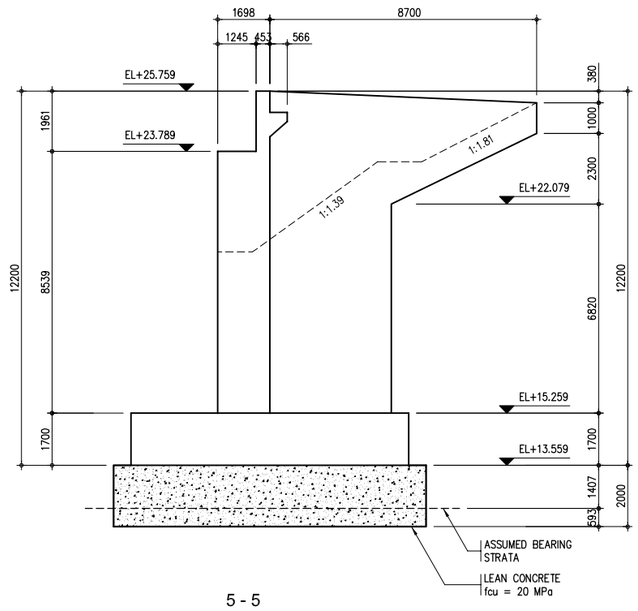

5 - 5

THE DEMOCRATIC SOCIALIST REPUBLIC OF SRI LANKA MINISTRY OF HIGHWAYS & ROAD DEVELOPMENT **Road Development Authority**	JICA JAPAN INTERNATIONAL COOPERATION AGENCY ORIENTAL CONSULTANTS COMPANY LIMITED in association with PACIFIC CONSULTANTS INTERNATIONAL	No / REVISION / DATE	COLOMBO OUTER CIRCULAR HIGHWAY PROJECT (NORTHERN SECTION 1) OVERPASS BRIDGE NO.9 DIMENSION DETAILS FOR ABUTMENT-A2	DESIGNED BY: CHECKED BY: APPROVED BY: DWG. NO.	 K03-17

REINFORCEMENT OF A1 AND A2 ABUTMENT (1) Scale 1:50

1 - 1

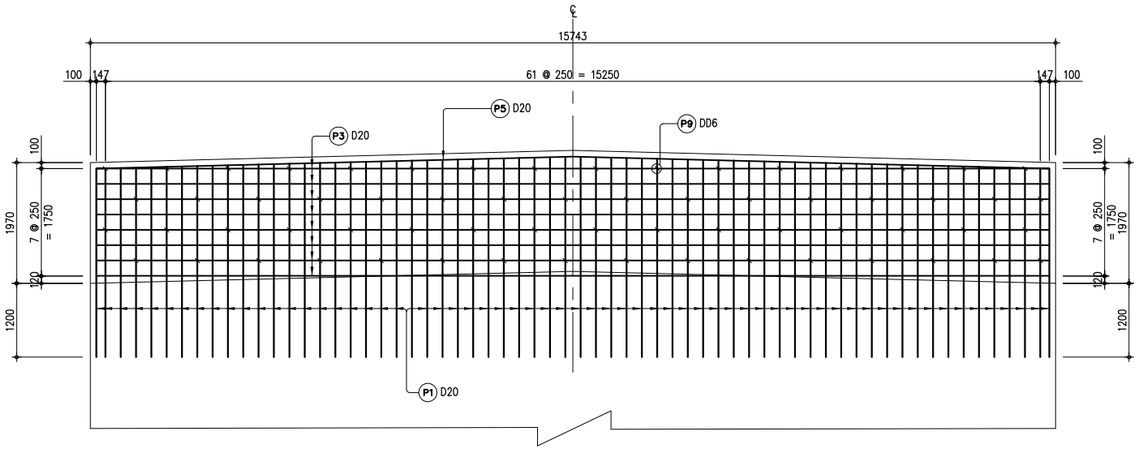

2 - 2

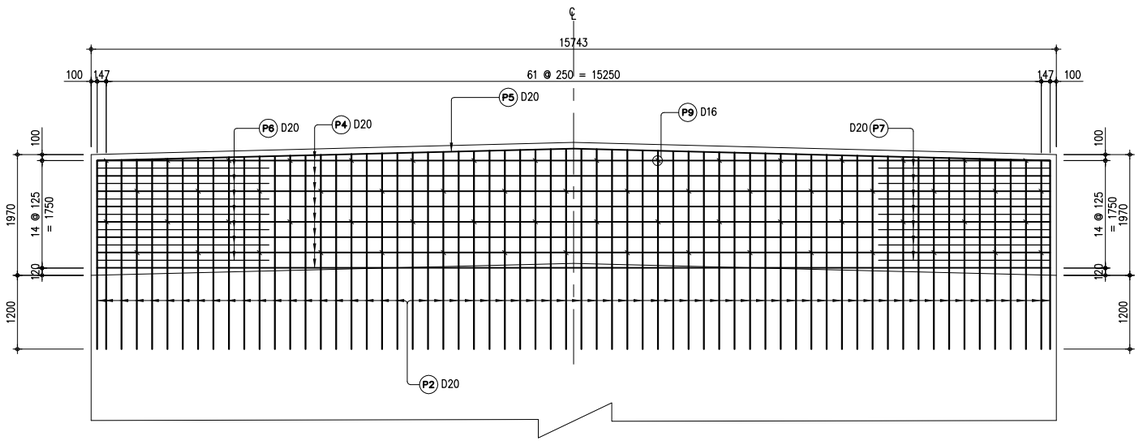

3 - 3

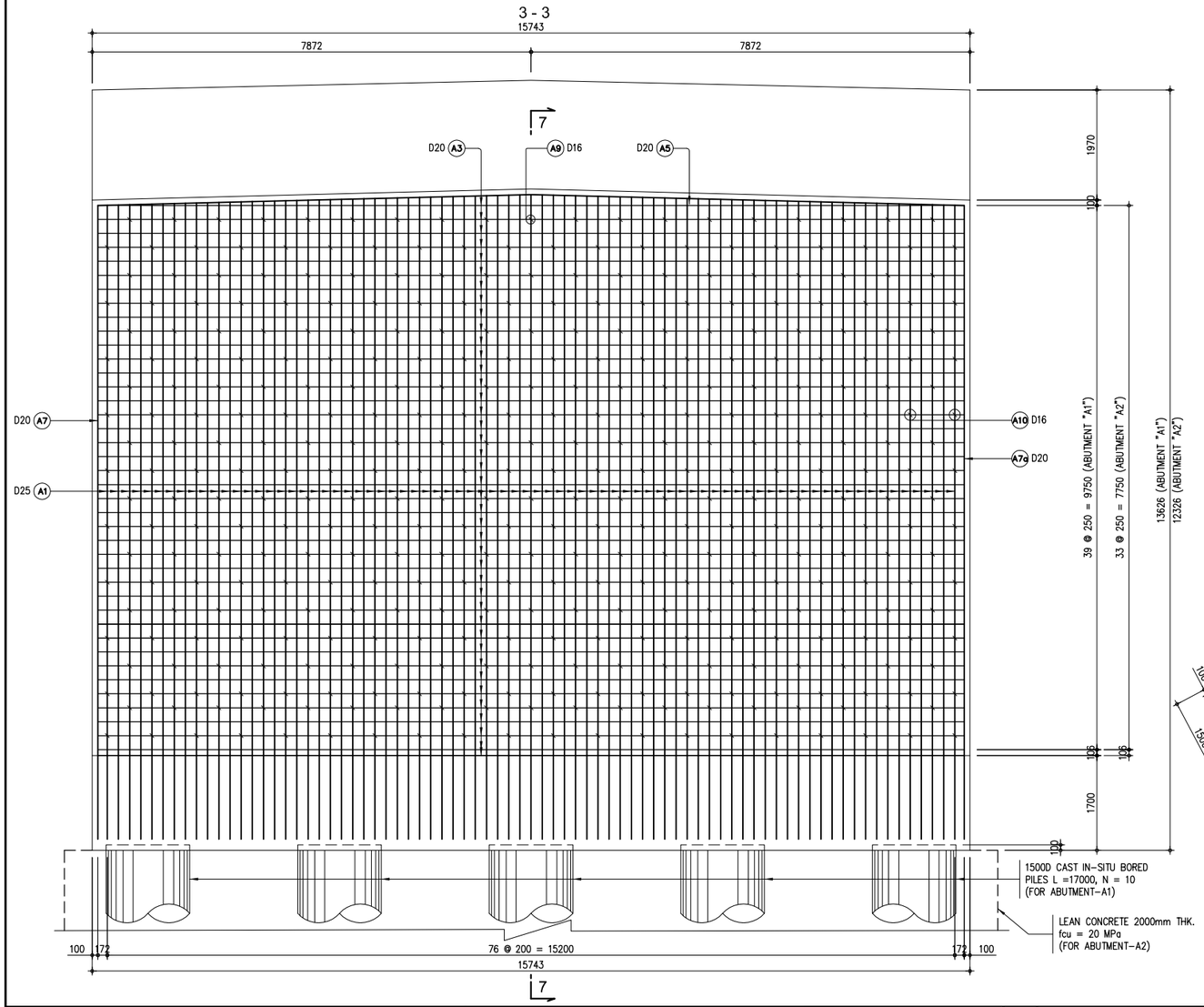

4 - 4

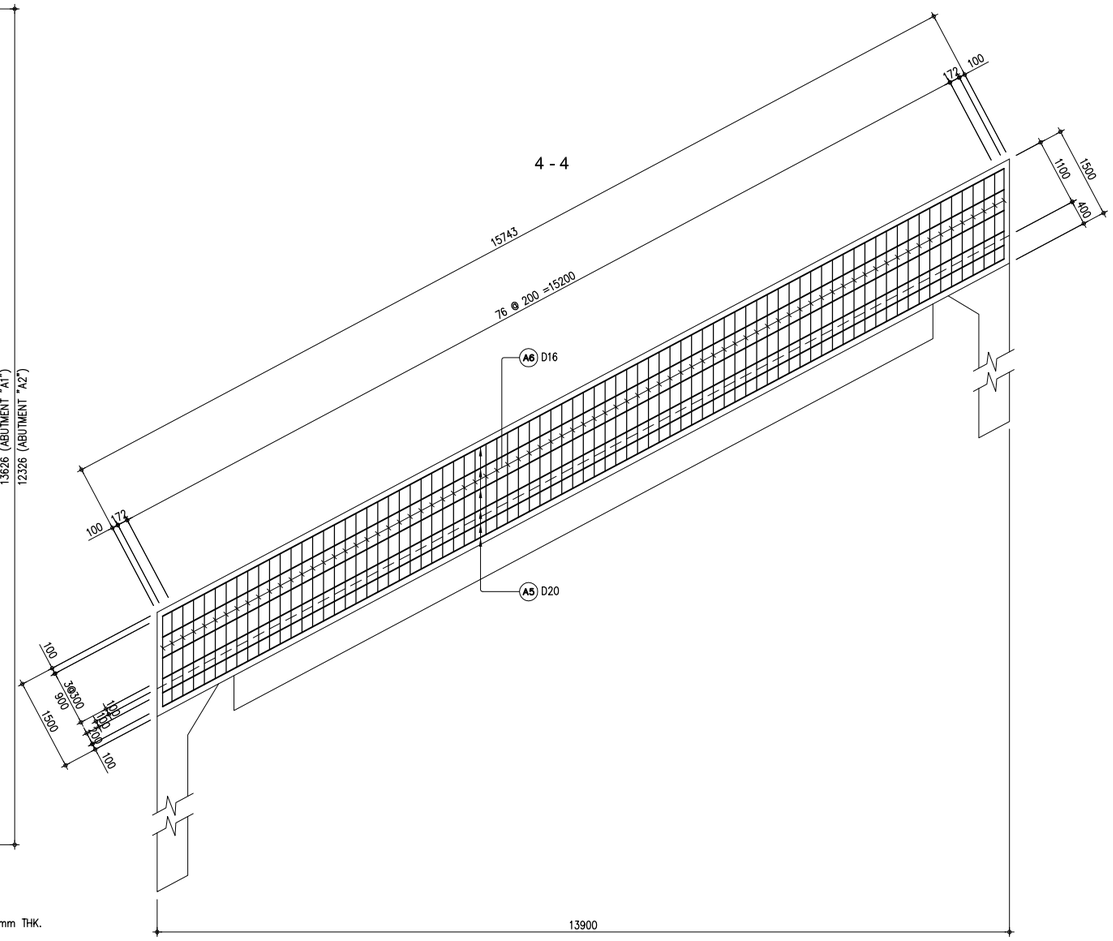

THE DEMOCRATIC SOCIALIST REPUBLIC OF SRI LANKA MINISTRY OF HIGHWAYS & ROAD DEVELOPMENT **Road Development Authority**	JICA JAPAN INTERNATIONAL COOPERATION AGENCY ORICONSUL ORIENTAL CONSULTANTS COMPANY LIMITED in association with PACIFIC CONSULTANTS INTERNATIONAL	No	REVISION	DATE	COLOMBO OUTER CIRCULAR HIGHWAY PROJECT (NORTHERN SECTION 1) OVERPASS BRIDGE NO.9 REINFORCEMENT BAR ARRANGEMENT OF ABUTMENT A1 AND A2 (1/7)

DESIGNED BY:	
CHECKED BY:	
APPROVED BY:	
DWG. NO.	K03-18

REINFORCEMENT OF A1 AND A2 ABUTMENT (2) Scale 1:50

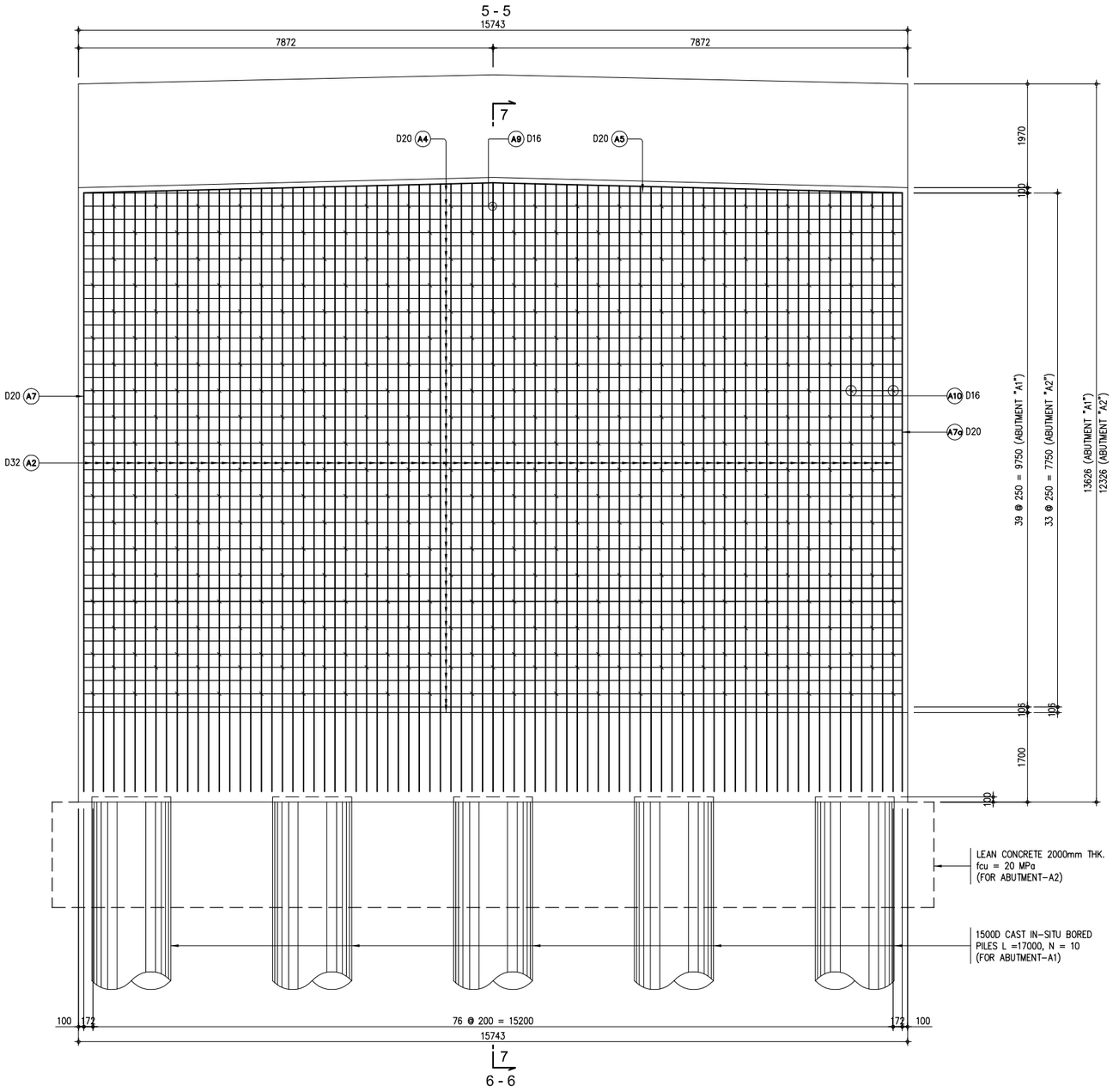

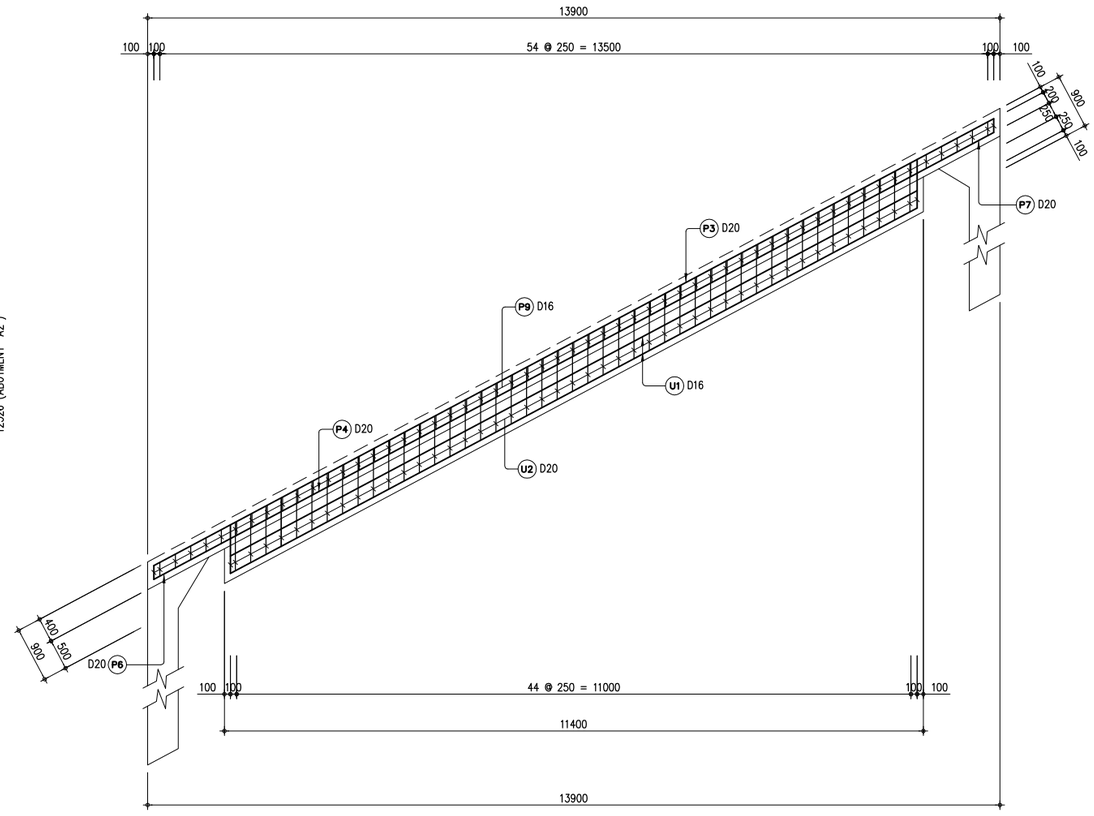

THE DEMOCRATIC SOCIALIST REPUBLIC OF SRI LANKA MINISTRY OF HIGHWAYS & ROAD DEVELOPMENT **Road Development Authority**	JICA JAPAN INTERNATIONAL COOPERATION AGENCY ORIENTAL CONSULTANTS COMPANY LIMITED in association with PACIFIC CONSULTANTS INTERNATIONAL	No	REVISION	DATE	COLOMBO OUTER CIRCULAR HIGHWAY PROJECT (NORTHERN SECTION 1) OVERPASS BRIDGE NO.9 REINFORCEMENT BAR ARRANGEMENT OF A1 AND A2 (2/7)	DESIGNED BY: CHECKED BY: APPROVED BY: DWG. NO. K03-19

REINFORCEMENT OF A1 AND A2 ABUTMENT (3) Scale 1:50

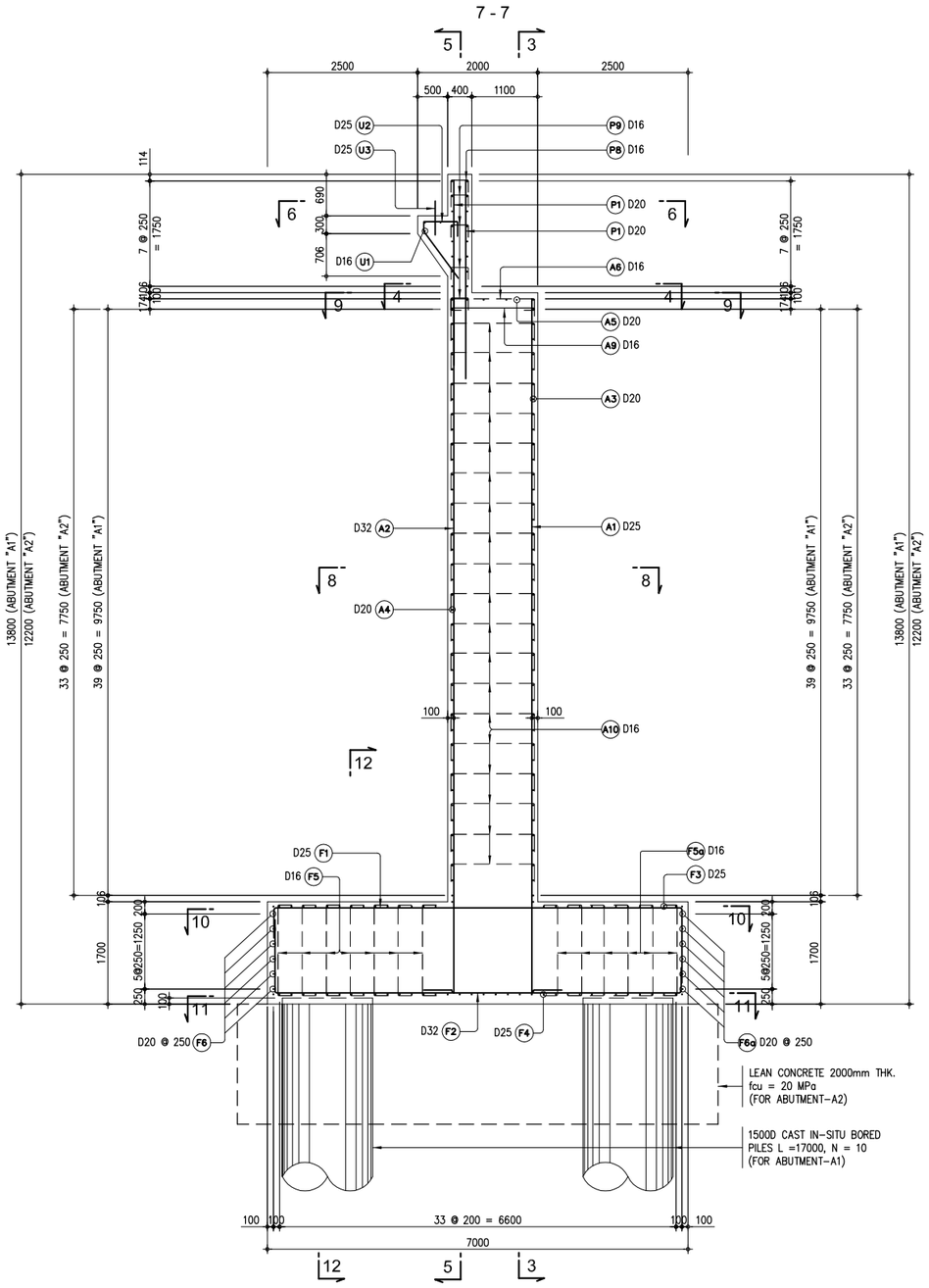

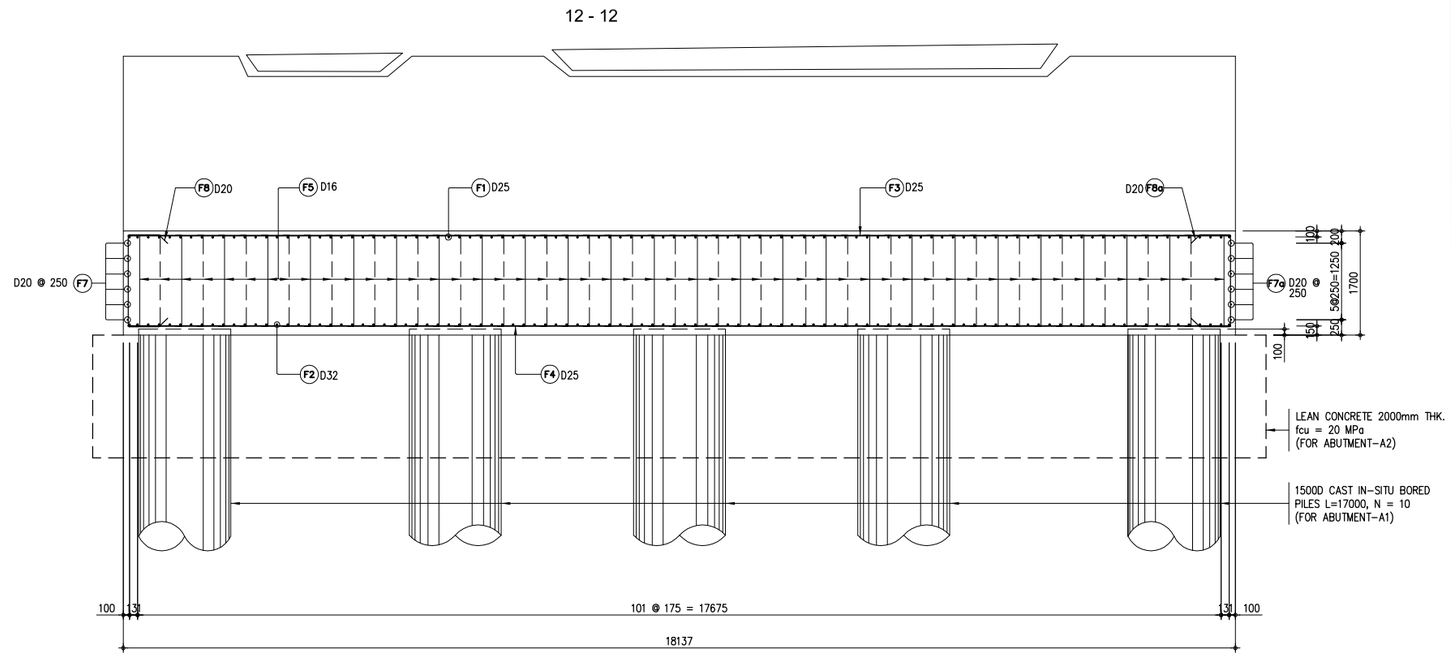

THE DEMOCRATIC SOCIALIST REPUBLIC OF SRI LANKA MINISTRY OF HIGHWAYS & ROAD DEVELOPMENT **Road Development Authority**	JICA JAPAN INTERNATIONAL COOPERATION AGENCY ORIENTAL CONSULTANTS COMPANY LIMITED in association with PACIFIC CONSULTANTS INTERNATIONAL	No / REVISION / DATE	COLOMBO OUTER CIRCULAR HIGHWAY PROJECT (NORTHERN SECTION 1) OVERPASS BRIDGE NO.9 REINFORCEMENT BAR ARRANGEMENT OF ABUTMENT A1 AND A2 (3/7)	DESIGNED BY: CHECKED BY: APPROVED BY: DWG. NO.	K03-20

REINFORCEMENT OF A1 AND A2 ABUTMENT (4) Scale 1:50

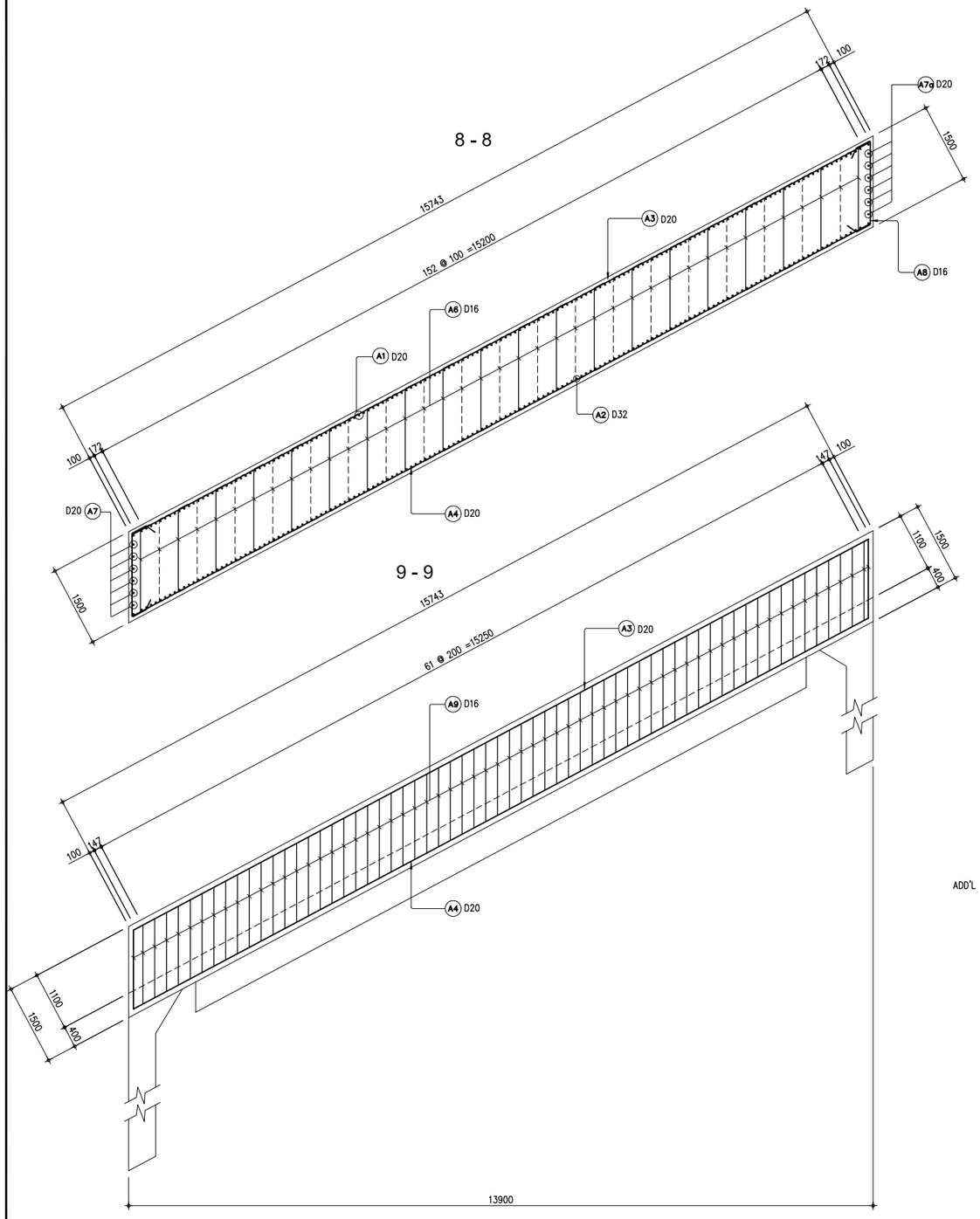

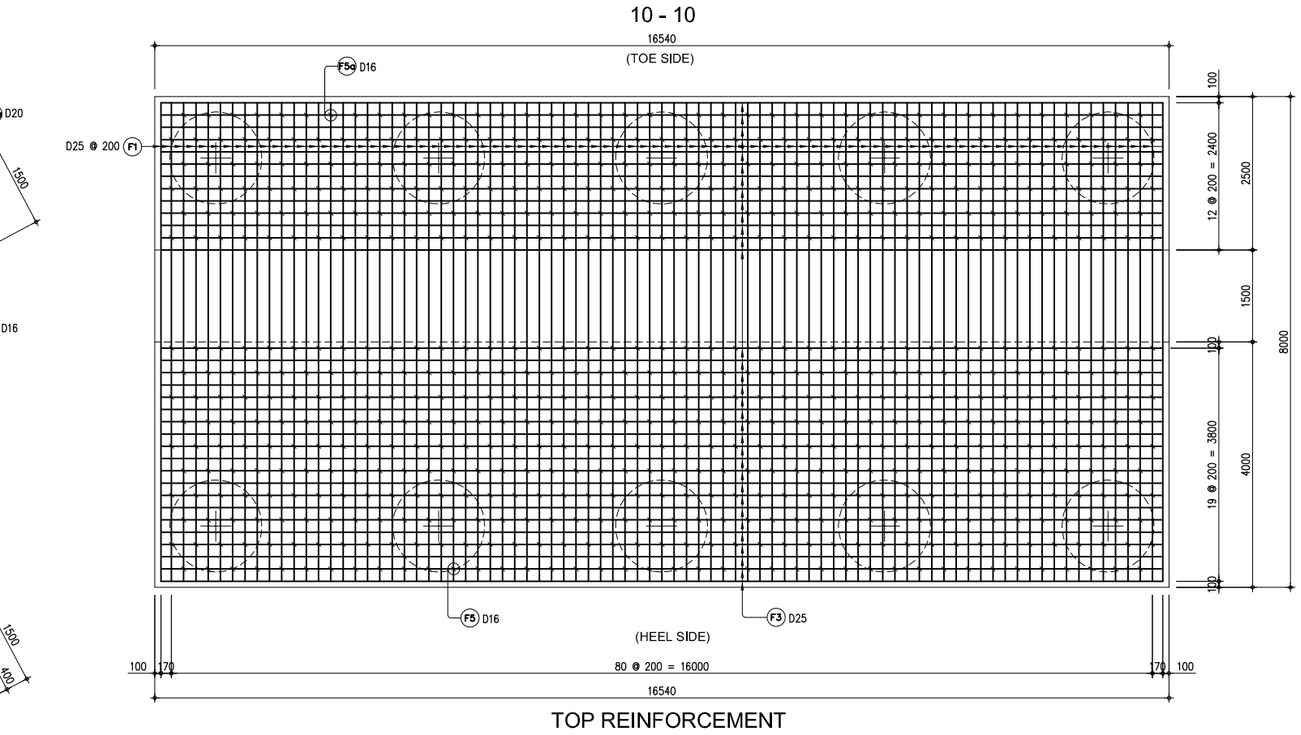

TOP REINFORCEMENT

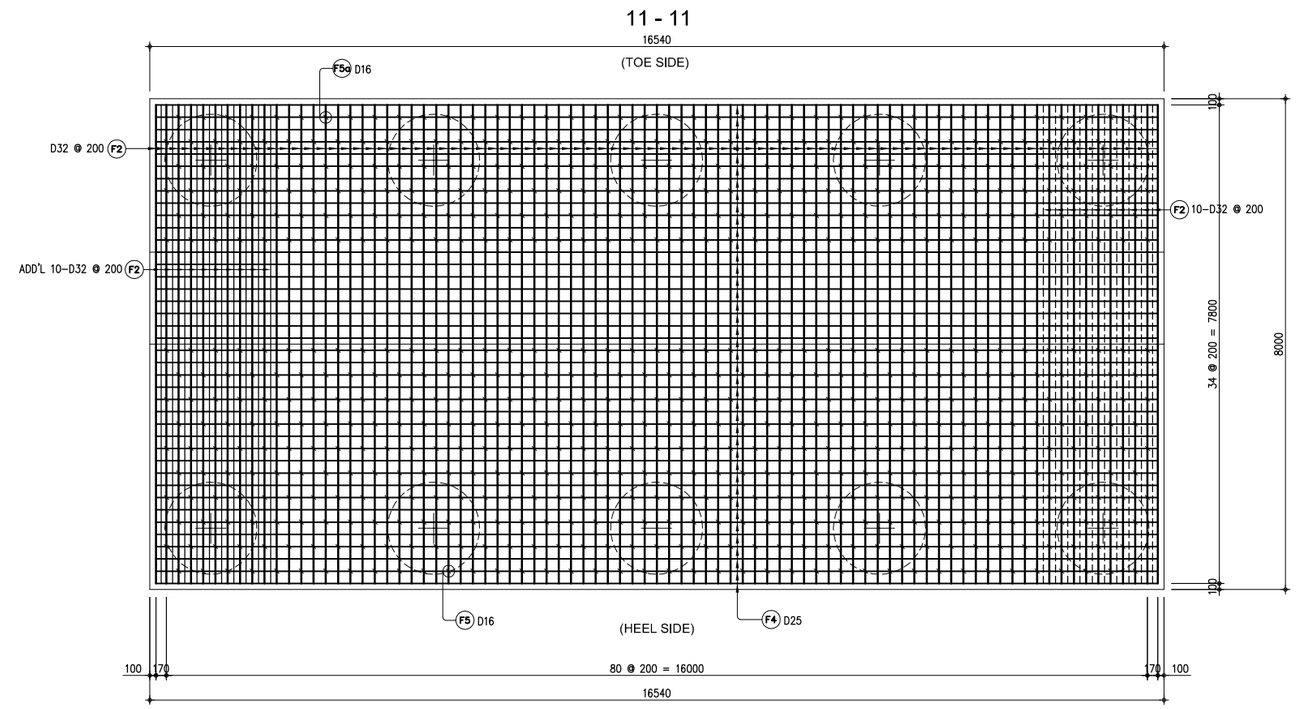

BOTTOM REINFORCEMENT

THE DEMOCRATIC SOCIALIST REPUBLIC OF SRI LANKA MINISTRY OF HIGHWAYS & ROAD DEVELOPMENT **Road Development Authority**	JICA JAPAN INTERNATIONAL COOPERATION AGENCY ORICONSUL ORIENTAL CONSULTANTS COMPANY LIMITED in association with PACIFIC CONSULTANTS INTERNATIONAL	No	REVISION	DATE	COLOMBO OUTER CIRCULAR HIGHWAY PROJECT (NORTHERN SECTION 1) OVERPASS BRIDGE NO.9 REINFORCEMENT BAR ARRANGEMENT OF ABUTMENT A1 AND A2 (4/7)	DESIGNED BY: CHECKED BY: APPROVED BY: DWG. NO. K03-21

REINFORCEMENT OF A2 ABUTMENT (5) Scale 1:50

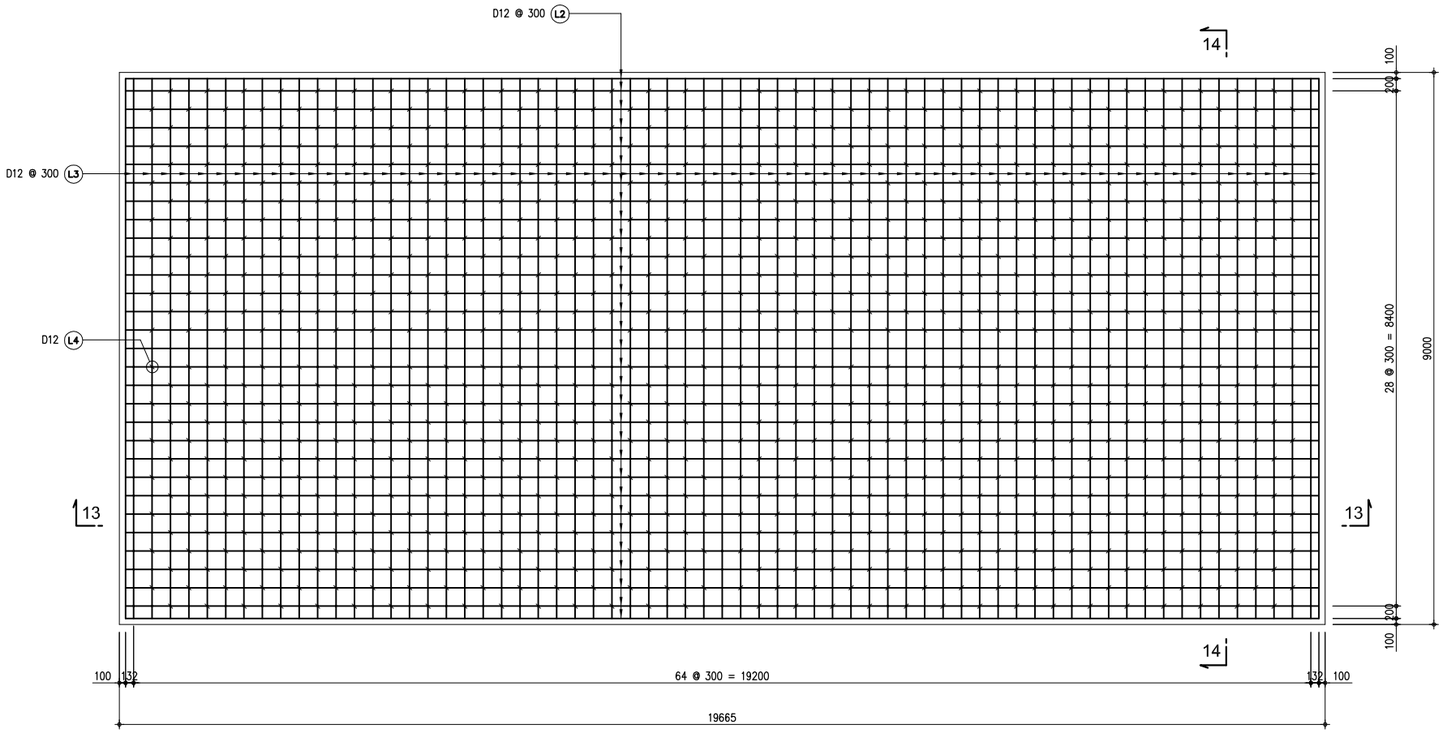

TOP AND BOTTOM REINFORCEMENT

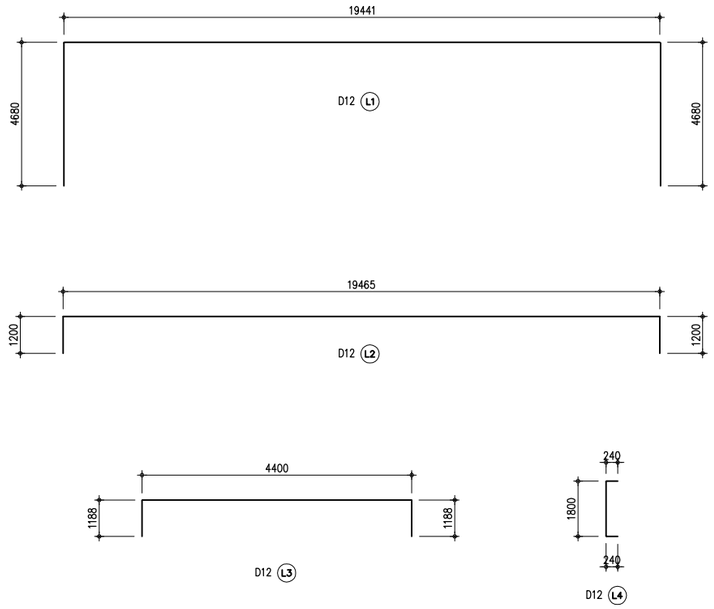

NOTE:

CONCRETE COVER TO REBARS = 75mm

LEAN CONCRETE fcu = 20 MPa

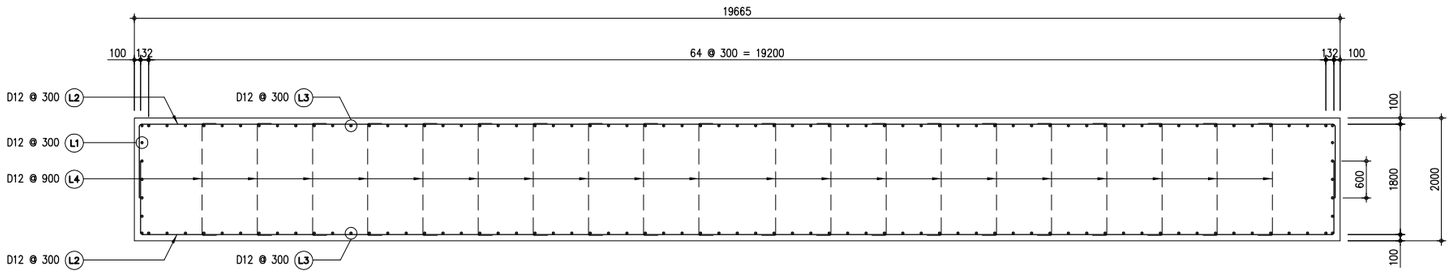

13 - 13

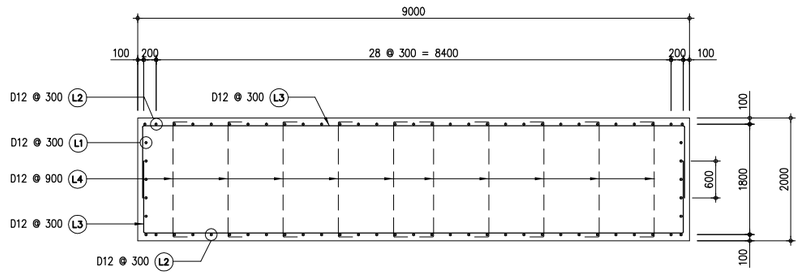

14 - 14

THE DEMOCRATIC SOCIALIST REPUBLIC OF SRI LANKA MINISTRY OF HIGHWAYS & ROAD DEVELOPMENT **Road Development Authority**	JICA JAPAN INTERNATIONAL COOPERATION AGENCY ORIENTAL CONSULTANTS COMPANY LIMITED in association with PACIFIC CONSULTANTS INTERNATIONAL	No / REVISION / DATE	COLOMBO OUTER CIRCULAR HIGHWAY PROJECT (NORTHERN SECTION 1) OVERPASS BRIDGE NO.9 REINFORCEMENT BAR ARRANGEMENT OF ABUTMENT A2 (5/7)	DESIGNED BY: CHECKED BY: APPROVED BY: DWG. NO.	K03-22

REINFORCEMENT OF A1 ABUTMENT (6) Scale 1:50

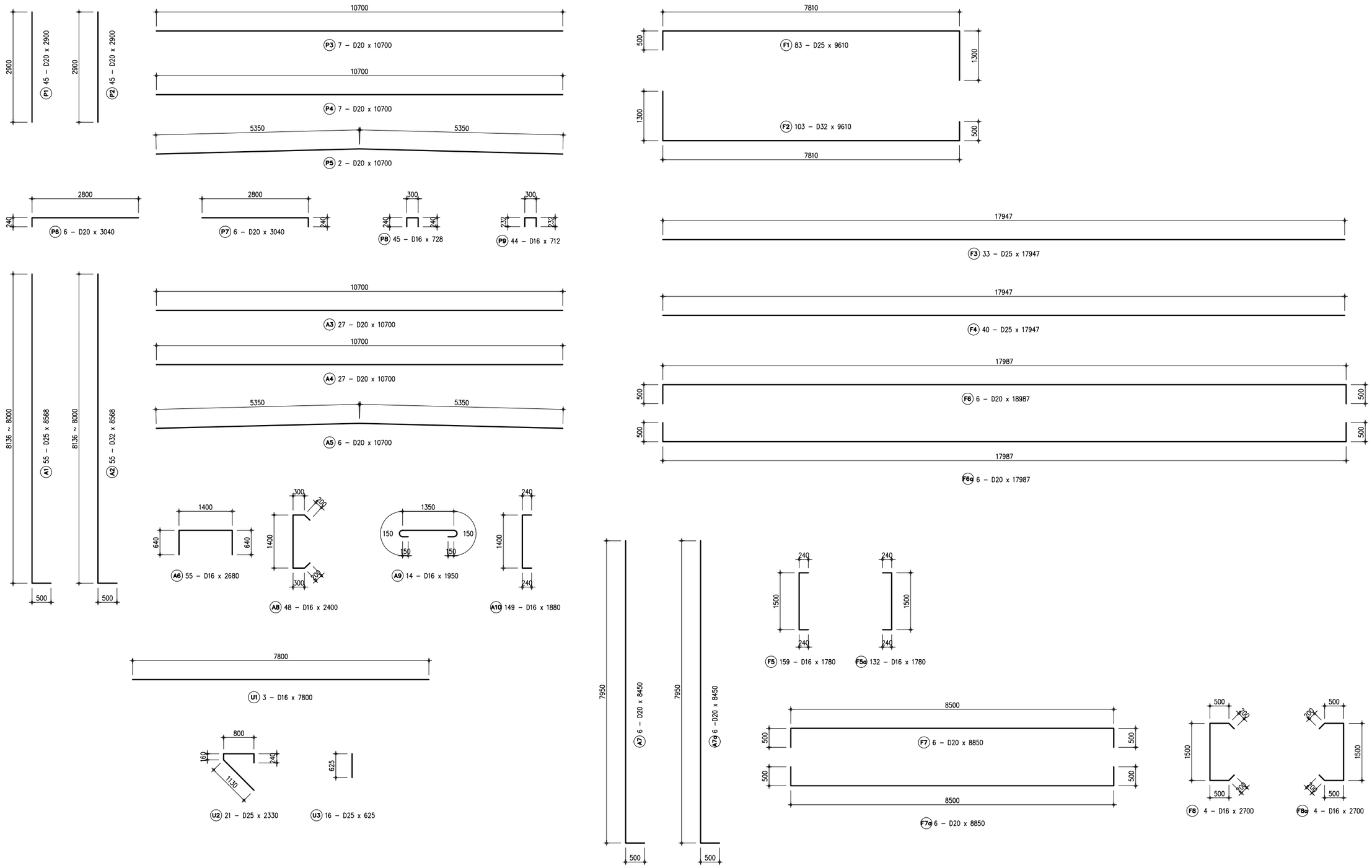

THE DEMOCRATIC SOCIALIST REPUBLIC OF SRI LANKA
MINISTRY OF HIGHWAYS & ROAD DEVELOPMENT
Road Development Authority

JICA JAPAN INTERNATIONAL COOPERATION AGENCY
ORIENTAL CONSULTANTS COMPANY LIMITED
in association with
PACIFIC CONSULTANTS INTERNATIONAL

No	REVISION	DATE

COLOMBO OUTER CIRCULAR HIGHWAY PROJECT
(NORTHERN SECTION 1)

OVERPASS BRIDGE NO.9
REINFORCEMENT BAR ARRANGEMENT OF ABUTMENT A1 AND A2 (6/7)

DESIGNED BY:	
CHECKED BY:	
APPROVED BY:	
DWG. NO.	K03-23

REINFORCEMENT OF A2 ABUTMENT (7) Scale 1:50

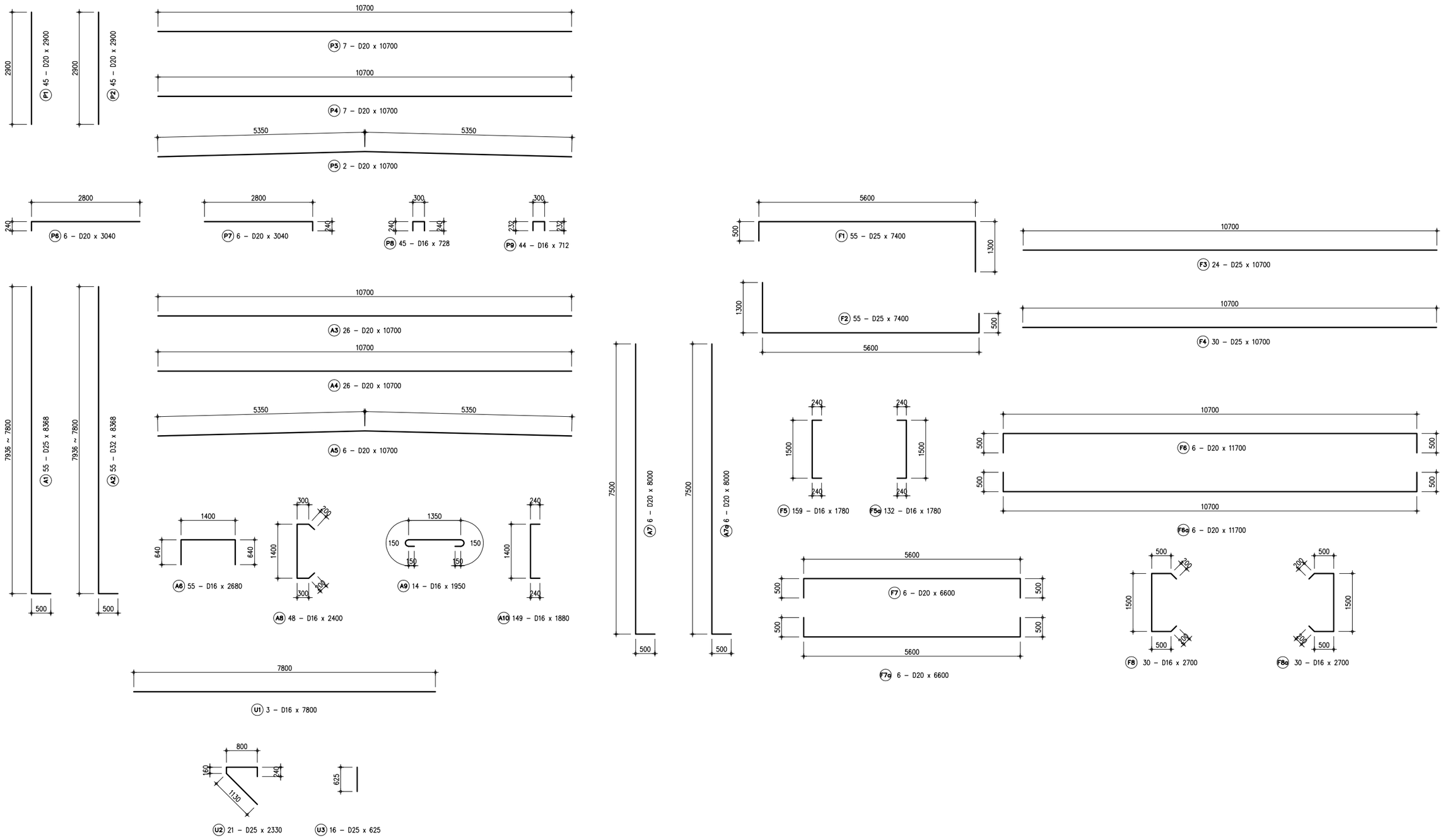

THE DEMOCRATIC SOCIALIST REPUBLIC OF SRI LANKA
MINISTRY OF HIGHWAYS & ROAD DEVELOPMENT
Road Development Authority

JAPAN INTERNATIONAL COOPERATION AGENCY
ORIENTAL CONSULTANTS COMPANY LIMITED
in association with
PACIFIC CONSULTANTS INTERNATIONAL

No	REVISION	DATE

COLOMBO OUTER CIRCULAR HIGHWAY PROJECT
(NORTHERN SECTION 1)

OVERPASS BRIDGE NO.9
REINFORCEMENT BAR ARRANGEMENT OF ABUTMENT A1 AND A2 (7/7)

DESIGNED BY:	
CHECKED BY:	
APPROVED BY:	
DWG. NO.	K03-24

REINFORCEMENT OF WINGWALL ABUTMENT A1 Scale 1:50

1 - 1

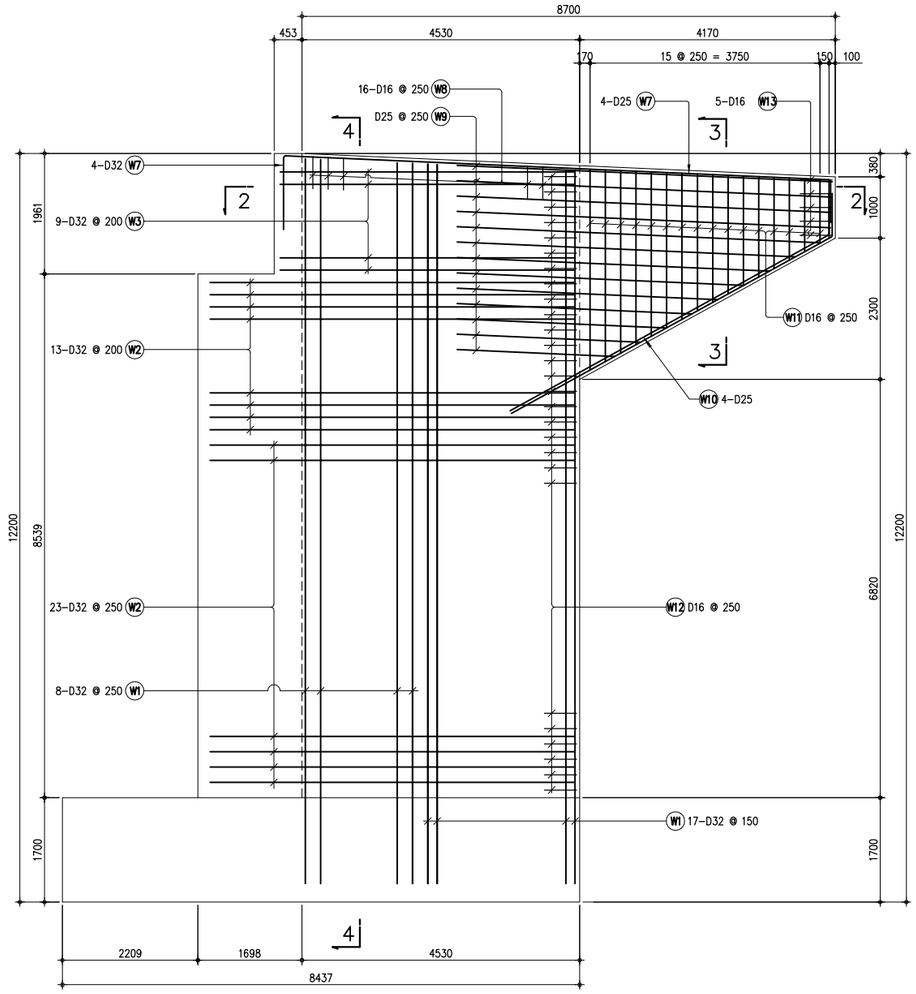

3 - 3

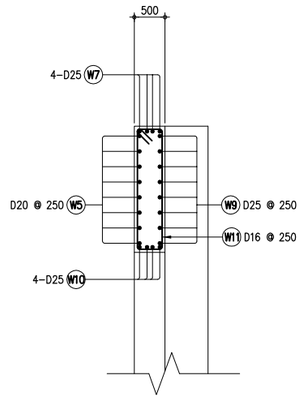

4 - 4

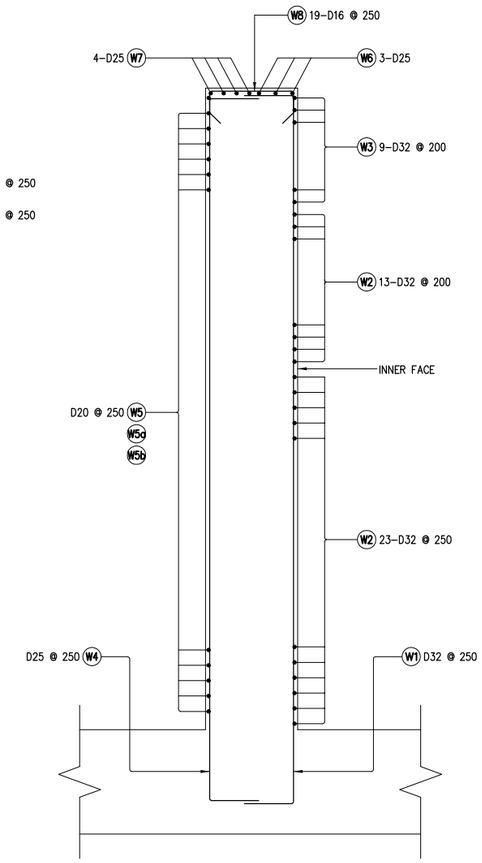

2 - 2

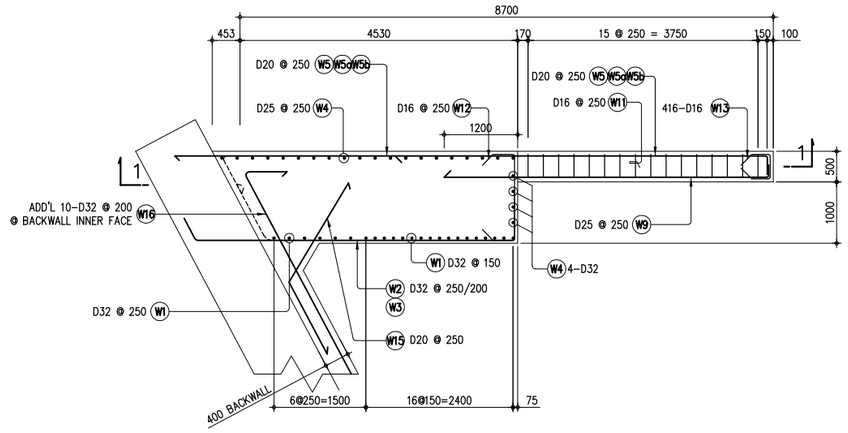

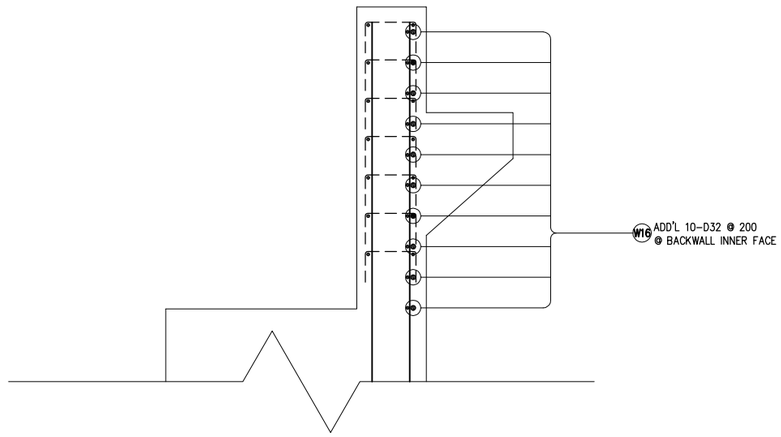

THE DEMOCRATIC SOCIALIST REPUBLIC OF SRI LANKA MINISTRY OF HIGHWAYS & ROAD DEVELOPMENT **Road Development Authority**	JICA JAPAN INTERNATIONAL COOPERATION AGENCY ORIENTAL CONSULTANTS COMPANY LIMITED in association with PACIFIC CONSULTANTS INTERNATIONAL	No / REVISION / DATE	COLOMBO OUTER CIRCULAR HIGHWAY PROJECT (NORTHERN SECTION 1) OVERPASS BRIDGE NO.9 REINFORCEMENT BAR ARRANGEMENT OF WINGWALL (ABUT-A1)(1/2)	DESIGNED BY: CHECKED BY: APPROVED BY: DWG. NO.	K03-25

REINFORCEMENT OF WINGWALL ABUTMENT A1 Scale 1:50

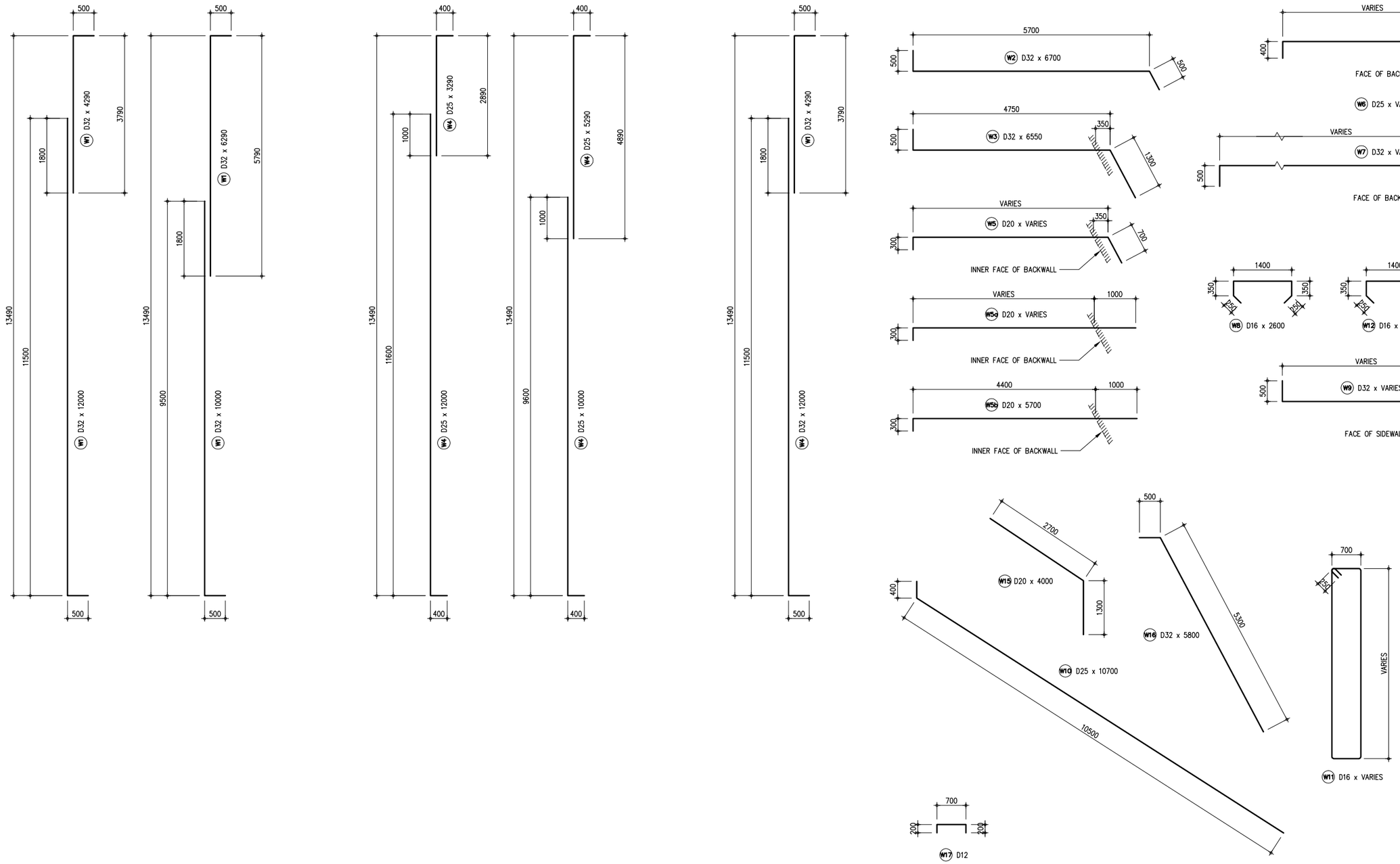

THE DEMOCRATIC SOCIALIST REPUBLIC OF SRI LANKA
MINISTRY OF HIGHWAYS & ROAD DEVELOPMENT
Road Development Authority

JICA JAPAN INTERNATIONAL COOPERATION AGENCY
ORICONSUL ORIENTAL CONSULTANTS COMPANY LIMITED
in association with
PACIFIC CONSULTANTS INTERNATIONAL

No	REVISION	DATE

COLOMBO OUTER CIRCULAR HIGHWAY PROJECT
(NORTHERN SECTION 1)

OVERPASS BRIDGE NO.9
REINFORCEMENT BAR ARRANGEMENT OF WINGWALL (ABUT-A1)(2/2)

DESIGNED BY:	
CHECKED BY:	
APPROVED BY:	
DWG. NO.	K03-26

REINFORCEMENT OF WINGWALL ABUTMENT A2 Scale 1:50

1 - 1

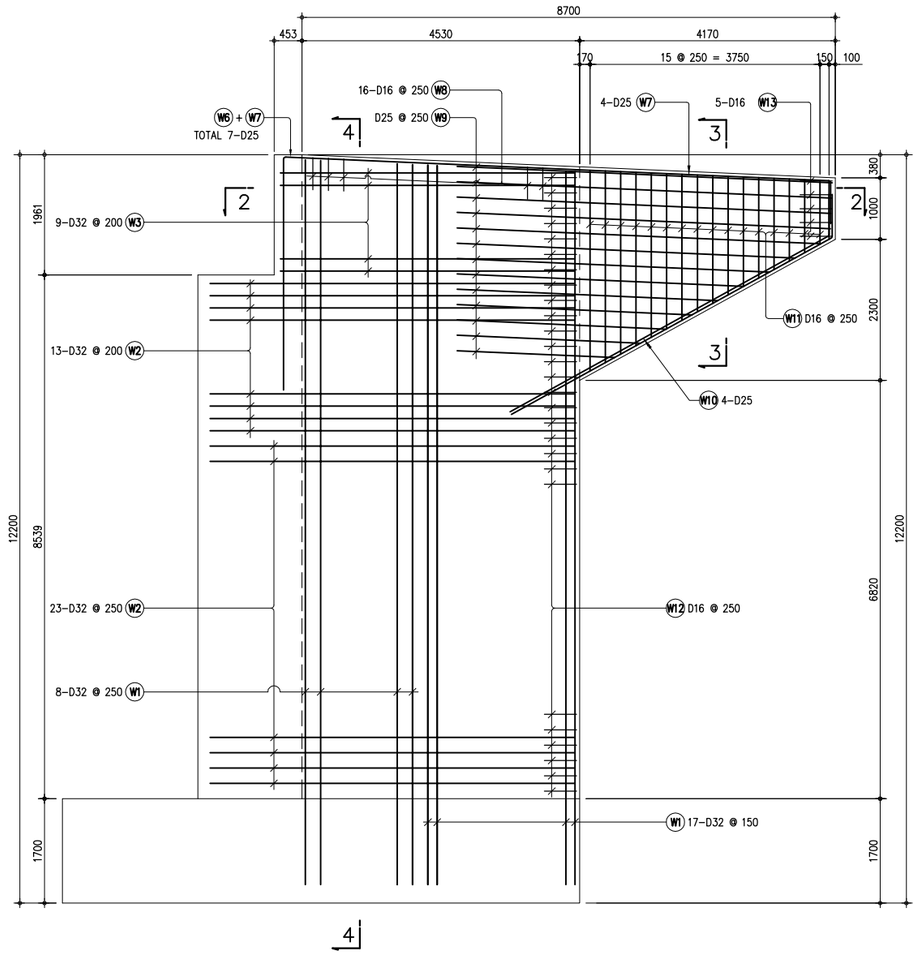

3 - 3

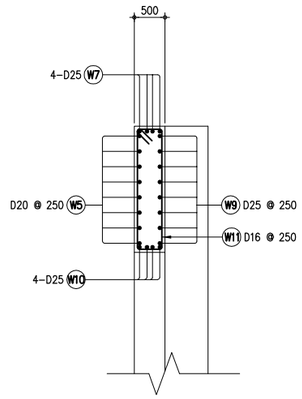

4 - 4

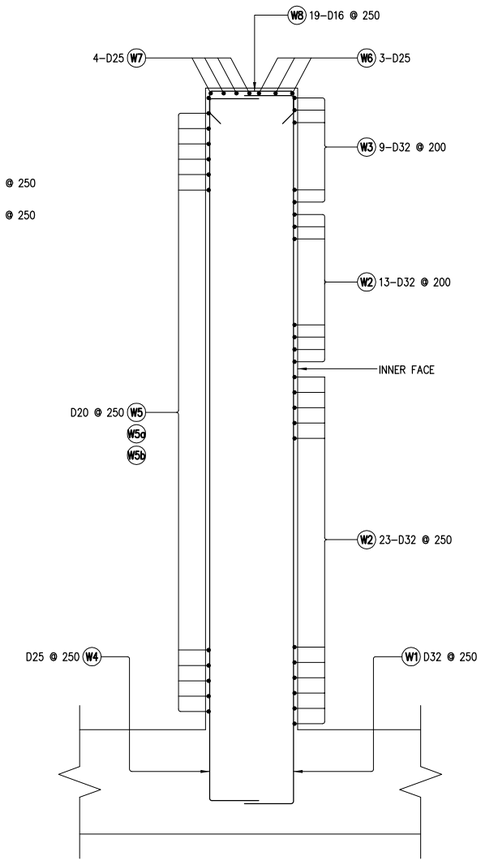

2 - 2

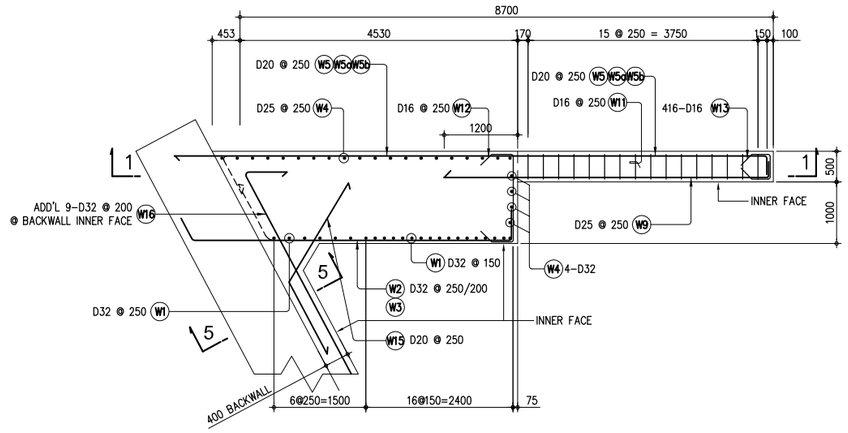

5 - 5

1:20

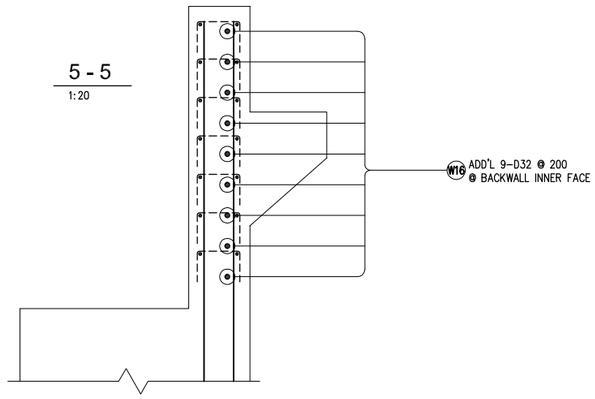

THE DEMOCRATIC SOCIALIST REPUBLIC OF SRI LANKA MINISTRY OF HIGHWAYS & ROAD DEVELOPMENT **Road Development Authority**	JICA JAPAN INTERNATIONAL COOPERATION AGENCY ORIENTAL CONSULTANTS COMPANY LIMITED in association with PACIFIC CONSULTANTS INTERNATIONAL	No / REVISION / DATE	COLOMBO OUTER CIRCULAR HIGHWAY PROJECT (NORTHERN SECTION 1) OVERPASS BRIDGE NO. 9 REINFORCEMENT BAR ARRANGEMENT OF WINGWALL (ABUT-A2) (1/2)	DESIGNED BY: CHECKED BY: APPROVED BY: DWG. NO.	 K03-27

REINFORCEMENT OF WINGWALL ABUTMENT A2 (7) Scale 1:50

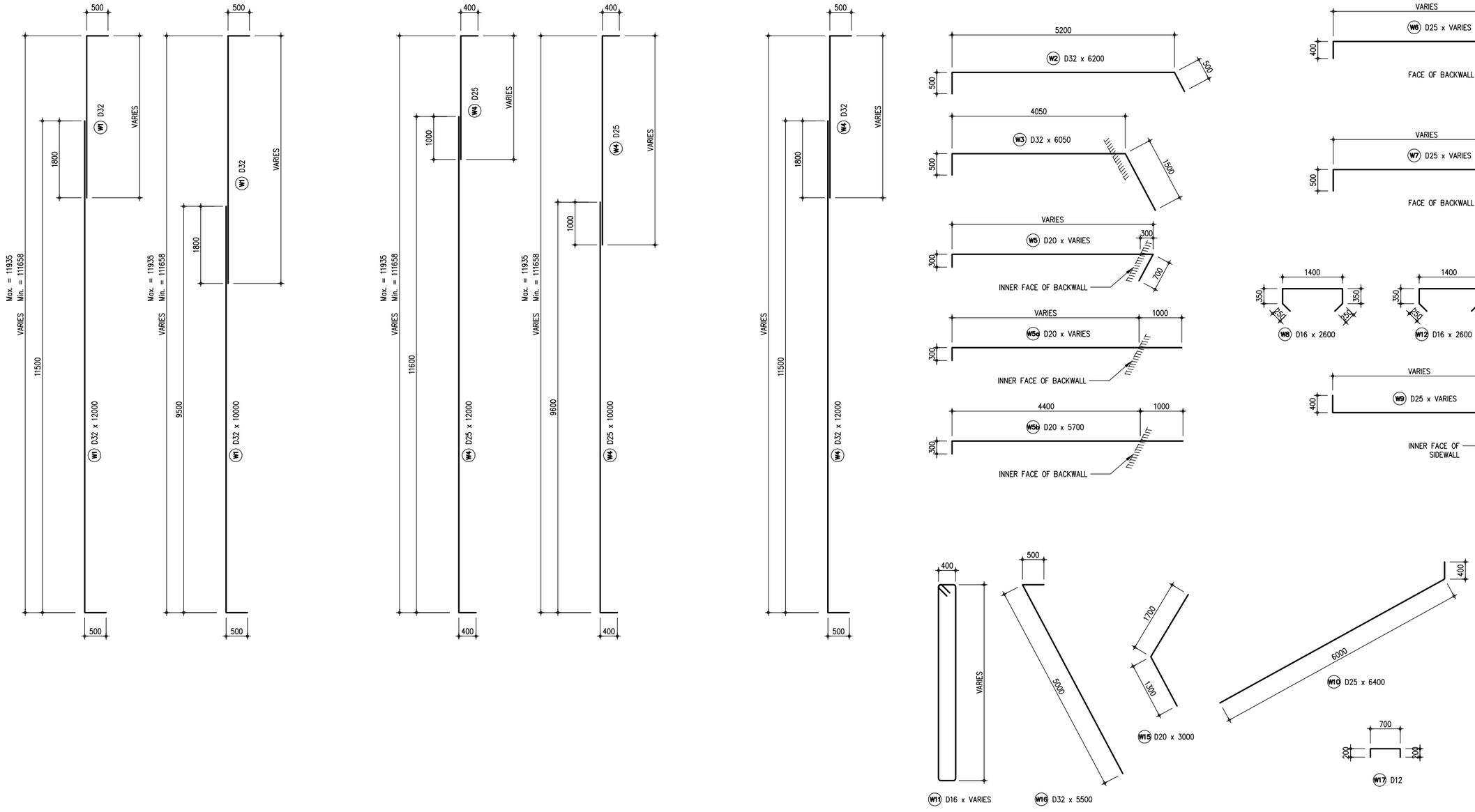

THE DEMOCRATIC SOCIALIST REPUBLIC OF SRI LANKA MINISTRY OF HIGHWAYS & ROAD DEVELOPMENT **Road Development Authority**	JICA JAPAN INTERNATIONAL COOPERATION AGENCY ORIENTAL CONSULTANTS COMPANY LIMITED in association with PACIFIC CONSULTANTS INTERNATIONAL	No / REVISION / DATE	COLOMBO OUTER CIRCULAR HIGHWAY PROJECT (NORTHERN SECTION 1) OVERPASS BRIDGE NO. 9 REINFORCEMENT BAR ARRANGEMENT OF WINGWALL (ABUT-A2) (2/2)	DESIGNED BY: CHECKED BY: APPROVED BY: DWG. NO.	K03-28

ESTIMATED QUANTITIES FOR ABUTMENT - A1 AND A2

ESTIMATED QUANTITIES FOR ABUTMENT A1

REINFORCING BARS

LOCATION	BAR MARK	SPACING	QTY. (pcs)	SIZE (mm)	DIMENSION mm (OUT TO OUT) a	b	c	d	e	LENGTH PER BAR (mm)	TOTAL LENGTH (m)	UNIT WEIGHT (kg/m)	TOTAL WEIGHT (kg)	CONCRETE VOLUME (m^3)
PARAPET	P1	AS SHOWN	64	20	2900					2900	185.60	2.466	457.69	
	P2	AS SHOWN	64	20	2900					2900	185.60	2.466	457.69	
	P3	AS SHOWN	7	20	16662					16662	116.63	2.466	287.62	
	P4	AS SHOWN	7	20	16662					16662	116.63	2.466	287.62	
	P5	AS SHOWN	2	20	16662					16662	33.32	2.466	82.18	
	P6	AS SHOWN	6	20	240	2900				3140	18.84	2.466	46.46	
	P7	AS SHOWN	6	20	2900	240				3140	18.84	2.466	46.46	
	P8	AS SHOWN	64	16	240	300	240			780	49.92	1.579	78.82	
	P9	AS SHOWN	63	16	232	300	232			764	48.13	1.579	76.00	
	U1	AS SHOWN	3	16	13607					13607	40.82	1.579	64.46	
	U2	AS SHOWN	47	25	1130	160	800	240		2330	109.51	3.854	422.05	
	U3	AS SHOWN	36	25	625					625	22.50	3.854	86.72	
	SUB-TOTAL QUANTITY FOR PARAPET												**2,393.76**	**14.659**
STEM	A1	AS SHOWN	79	25	500	13149				13649	1078.27	3.854	4,155.66	
	A2	AS SHOWN	79	32	500	13541				14041	1109.24	6.313	7,002.63	
	A3	AS SHOWN	42	20	16662					16662	699.80	2.466	1,725.72	
	A4	AS SHOWN	42	20	16662					16662	699.80	2.466	1,725.72	
	A5	AS SHOWN	6	20	8331	8331				16662	99.97	2.466	246.53	
	A6	AS SHOWN	79	16	640	1400				2680	211.72	1.579	334.31	
	A7	AS SHOWN	6	20	500	12782	640			13282	79.69	2.466	196.52	
	A7a	AS SHOWN	6	20	500	12782				13282	79.69	2.466	196.52	
	A8	AS SHOWN	84	16	200	300	1400	300	200	2400	201.60	1.579	318.33	
	A9	AS SHOWN	64	16	150	150	1350	150	150	1950	124.80	1.579	197.06	
	A10	AS SHOWN	410	16	240	1400	240			1880	770.80	1.579	1,217.09	
	SUB-TOTAL QUANTITY FOR STEM												**17,316.07**	**241.340**
FOOTING	F1	AS SHOWN	83	25	500	6800	1300			8600	713.80	3.854	2,750.99	
	F2	AS SHOWN	83	25	1300	6800	500			8600	713.80	3.854	2,750.99	
	F3	AS SHOWN	28	25	17740					17740	496.72	3.854	1,914.36	
	F4	AS SHOWN	35	25	17740					17740	620.90	3.854	2,392.95	
	F5	AS SHOWN	283	16	240	1500	240			1980	560.34	1.579	884.78	
	F5a	AS SHOWN	243	16	240	1500	240			1980	481.14	1.579	759.72	
	F6	AS SHOWN	6	20	500	17460	500			18460	110.76	2.466	273.13	
	F6a	AS SHOWN	6	20	500	17460	500			18460	110.76	2.466	273.13	
	F7	AS SHOWN	6	20	500	6800	500			7800	46.80	2.466	115.41	
	F7a	AS SHOWN	6	20	500	6800	500			7800	46.80	2.466	115.41	
	F8	AS SHOWN	34	16	200	500	1500	500	200	2900	98.60	1.579	155.69	
	F8a	AS SHOWN	34	16	200	500	1500	500	200	2900	98.60	1.579	155.69	
	SUB-TOTAL QUANTITY FOR FOOTING												**12,542.24**	**196.826**
WINGWALL (X2)	W1	AS SHOWN	10	32	240	4783				5023	50.23	6.313	317.10	
	W2	AS SHOWN	4	32	240	4408				4648	18.59	6.313	117.37	
	W3	AS SHOWN	22	32	240	3813				4053	89.17	6.313	562.90	
	W4	AS SHOWN	36	20	240	2625				2865	103.14	2.466	254.34	
	W5	AS SHOWN	4	32	1050	6870				7920	31.68	6.313	200.00	
	W6	AS SHOWN	10	25	240	4783				5023	50.23	3.854	193.59	
	W7	AS SHOWN	4	25	240	4408				4648	18.59	3.854	71.65	
	W8	AS SHOWN	22	25	240	3813				4053	89.17	3.854	343.65	
	W9	AS SHOWN	30	20	240	2625				2865	85.95	2.466	211.95	
	W10	AS SHOWN	174	16	300	370	240			910	158.34	1.579	250.02	
	W11	AS SHOWN	36	16	240	400	240			880	31.68	1.579	50.02	
	W12	AS SHOWN	36	16	230	400	230			860	30.96	1.579	48.89	
	W13	AS SHOWN	36	16	240	750	240			1230	44.28	1.579	69.92	
	W14	AS SHOWN	36	16	240	1960	240			2440	87.84	1.579	138.70	
	SUB-TOTAL QUANTITY WINGWALL												**2,830.10**	**46.53**
	GRAND TOTAL FOR ABUTMENT A1												**35,082.17**	**499.359**

ESTIMATED QUANTITIES FOR ABUTMENT A2

REINFORCING BARS

LOCATION	BAR MARK	SPACING	QTY. (pcs)	SIZE (mm)	DIMENSION mm (OUT TO OUT) a	b	c	d	e	LENGTH PER BAR (mm)	TOTAL LENGTH (m)	UNIT WEIGHT (kg/m)	TOTAL WEIGHT (kg)	CONCRETE VOLUME (m^3)
PARAPET	P1	AS SHOWN	64	20	2900					2900	185.60	2.466	457.69	
	P2	AS SHOWN	64	20	2900					2900	185.60	2.466	457.69	
	P3	AS SHOWN	7	20	16662					16662	116.63	2.466	287.62	
	P4	AS SHOWN	7	20	16662					16662	116.63	2.466	287.62	
	P5	AS SHOWN	2	20	16542					16542	33.08	2.466	81.59	
	P6	AS SHOWN	6	20	240	2900				3140	18.84	2.466	46.46	
	P7	AS SHOWN	6	20	240	2900				3140	18.84	2.466	46.46	
	P8	AS SHOWN	64	16	240	300	240			780	49.92	1.579	78.82	
	P9	AS SHOWN	63	16	232	300	232			764	48.13	1.579	76.00	
	U1	AS SHOWN	3	16	13609					13609	40.83	1.579	64.47	
	U2	AS SHOWN	47	25	1130	160	800	240		2330	109.51	3.854	422.05	
	U3	AS SHOWN	36	25	625					625	22.50	3.854	86.72	
	SUB-TOTAL QUANTITY FOR PARAPET												**2,393.18**	**14.659**
STEM	A1	AS SHOWN	79	25	500	10149				10649	841.27	3.854	3,242.26	
	A2	AS SHOWN	79	32	500	10149				10649	841.27	6.313	5,310.94	
	A3	AS SHOWN	35	20	16662					16662	583.17	2.466	1,438.10	
	A4	AS SHOWN	35	20	16662					16662	583.17	2.466	1,438.10	
	A5	AS SHOWN	6	20	8331	8331				16662	99.97	2.466	246.53	
	A6	AS SHOWN	79	16	640	1400	640			2680	211.72	1.579	334.31	
	A7	AS SHOWN	6	20	500	10062				10562	63.37	2.466	156.28	
	A7a	AS SHOWN	6	20	500	10062				10562	63.37	2.466	156.28	
	A8	AS SHOWN	70	16	200	300	1400	300	200	2400	168.00	1.579	265.27	
	A9	AS SHOWN	64	16	150	150	1350	150	150	1950	124.80	1.579	197.06	
	A10	AS SHOWN	410	16	240	1400	240			1880	770.80	1.579	1,217.09	
	SUB-TOTAL QUANTITY FOR STEM												**14,002.21**	**203.557**
FOOTING	F1	AS SHOWN	83	25	500	6800	1300			8600	713.80	3.854	2,750.99	
	F2	AS SHOWN	83	25	1300	6800	500			8600	713.80	3.854	2,750.99	
	F3	AS SHOWN	28	25	17740					17740	496.72	3.854	1,914.36	
	F4	AS SHOWN	35	25	17740					17740	620.90	3.854	2,392.95	
	F5	AS SHOWN	283	16	240	1500	240			1980	560.34	1.579	884.78	
	F5a	AS SHOWN	243	16	240	1500	240			1980	481.14	1.579	759.72	
	F6	AS SHOWN	6	20	500	17460	500			18460	110.76	2.466	273.13	
	F6a	AS SHOWN	6	20	500	17460	500			18460	110.76	2.466	273.13	
	F7	AS SHOWN	6	20	500	6800	500			7800	46.80	2.466	115.41	
	F7a	AS SHOWN	6	20	500	6800	500			7800	46.80	2.466	115.41	
	F8	AS SHOWN	34	16	200	500	1500	500	200	2900	98.60	1.579	155.69	
	F8a	AS SHOWN	34	16	200	500	1500	500	200	2900	98.60	1.579	155.69	
	SUB-TOTAL QUANTITY FOR FOOTING												**12,542.24**	**196.826**
WINGWALL (X2)	W1	AS SHOWN	10	32	240	4783				5023	50.23	6.313	317.10	
	W2	AS SHOWN	4	32	240	4408				4648	18.59	6.313	117.37	
	W3	AS SHOWN	22	32	240	3813				4053	89.17	6.313	562.90	
	W4	AS SHOWN	36	20	240	2625				2865	103.14	2.466	254.34	
	W5	AS SHOWN	4	32	1050	6870				7920	31.68	6.313	200.00	
	W6	AS SHOWN	10	25	240	4783				5023	50.23	3.854	193.59	
	W7	AS SHOWN	4	25	240	4408				4648	18.59	3.854	71.65	
	W8	AS SHOWN	22	25	240	3813				4053	89.17	3.854	343.65	
	W9	AS SHOWN	30	20	240	2625				2865	85.95	2.466	211.95	
	W10	AS SHOWN	174	16	300	370	240			910	158.34	1.579	250.02	
	W11	AS SHOWN	36	16	240	400	240			880	31.68	1.579	50.02	
	W12	AS SHOWN	36	16	230	400	230			860	30.96	1.579	48.89	
	W13	AS SHOWN	36	16	240	750	240			1230	44.28	1.579	69.92	
	W14	AS SHOWN	36	16	240	1960	240			2440	87.84	1.579	138.70	
	SUB-TOTAL QUANTITY WINGWALL												**2,830.10**	**42.600**
	GRAND TOTAL FOR ABUTMENT A1												**31,767.73**	**457.642**

REINFORCEMENT OF PIER (1) SCALE 1:50

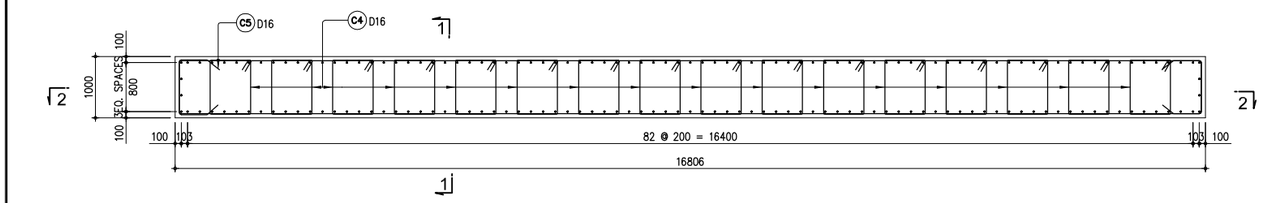

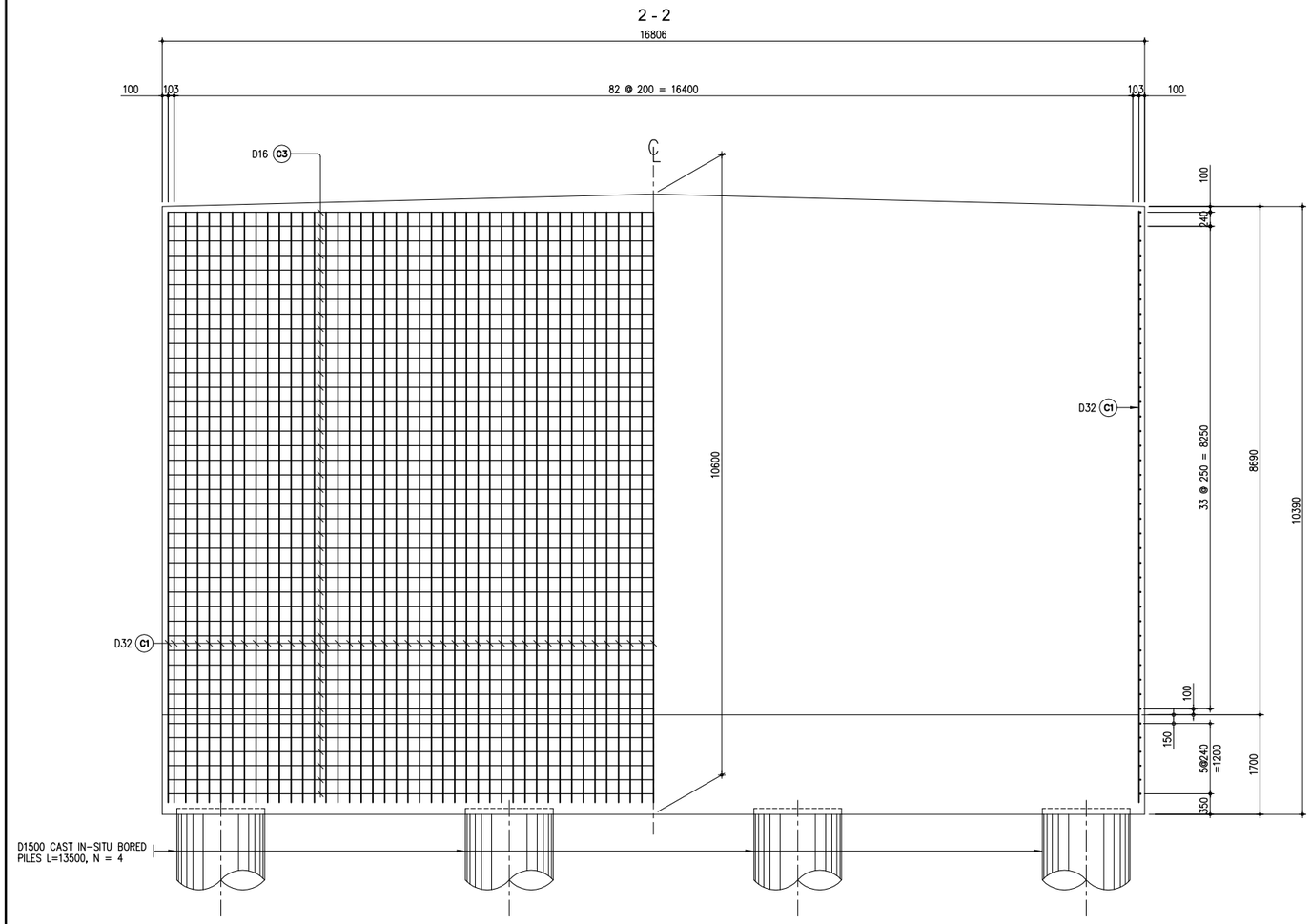

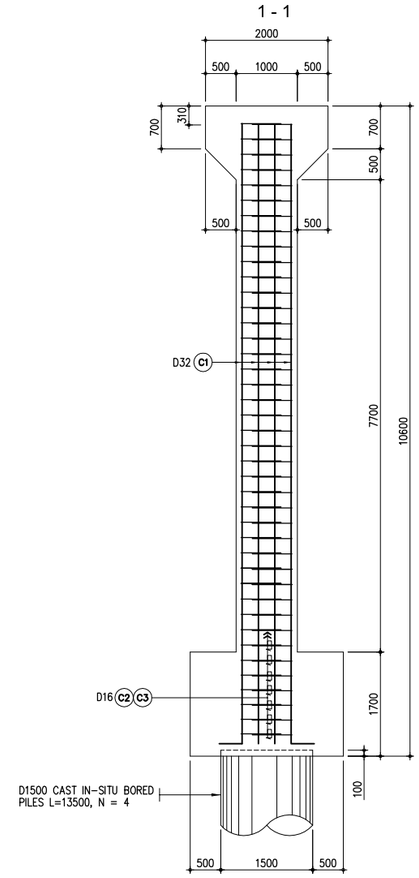

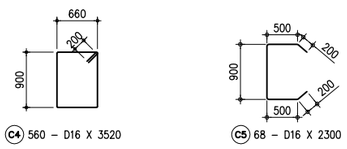

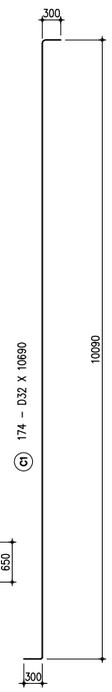

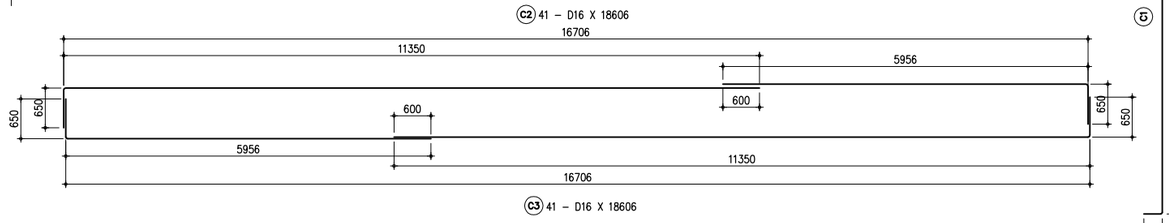

THE DEMOCRATIC SOCIALIST REPUBLIC OF SRI LANKA
MINISTRY OF HIGHWAYS & ROAD DEVELOPMENT
Road Development Authority

JICA JAPAN INTERNATIONAL COOPERATION AGENCY
ORICONSUL ORIENTAL CONSULTANTS COMPANY LIMITED
in association with
PACIFIC CONSULTANTS INTERNATIONAL

No	REVISION	DATE

COLOMBO OUTER CIRCULAR HIGHWAY PROJECT
(NORTHERN SECTION 1)

OVERPASS BRIDGE NO.9
REINFORCEMENT BAR ARRANGEMENT OF PIER (1/3)

DESIGNED BY:	
CHECKED BY:	
APPROVED BY:	
DWG. NO.	K03-30

REINFORCEMENT OF P1 PIER (2) Scale 1:50

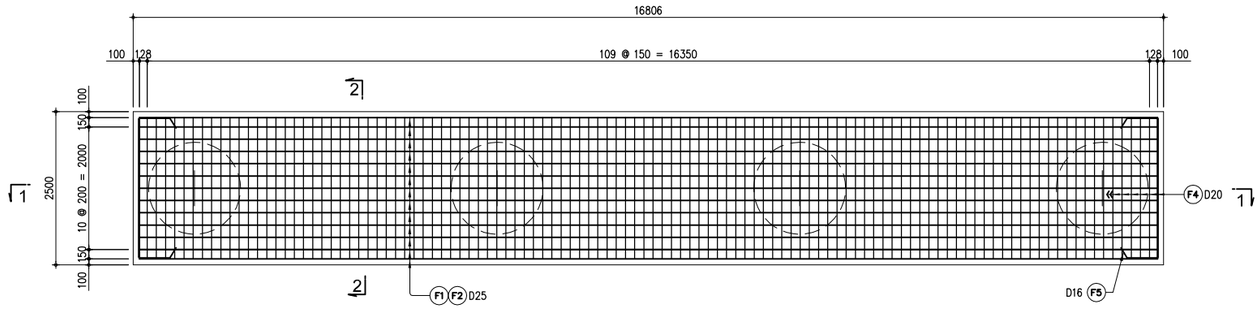

1 - 1

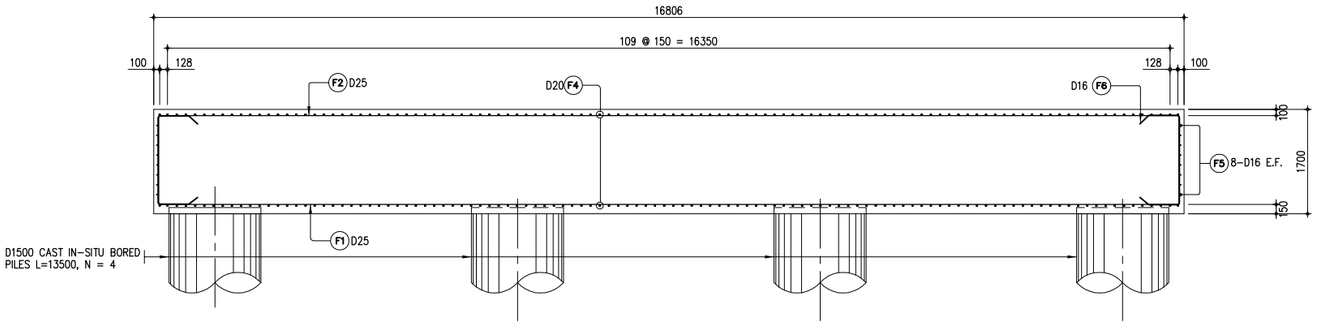

2 - 2

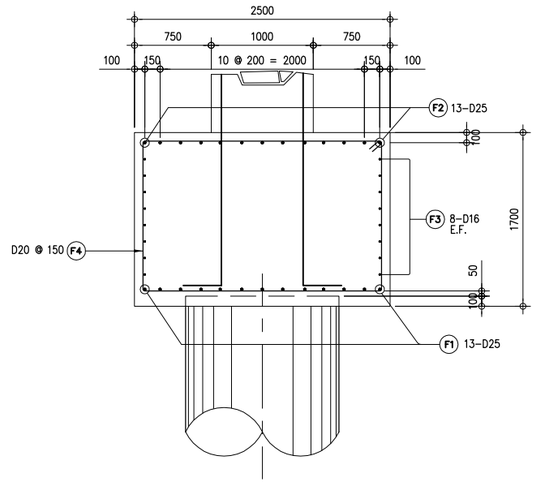

2-2 SECTION
SCALE 1:30

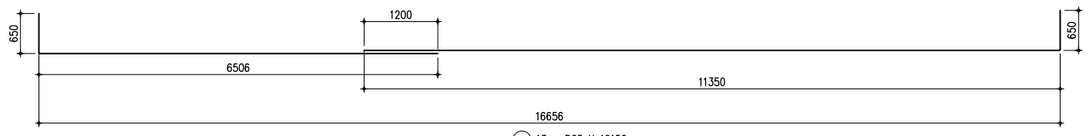

F1 13 – D25 X 19156

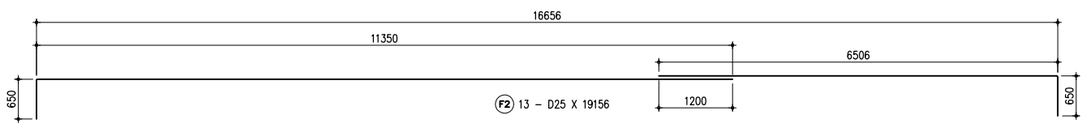

F2 13 – D25 X 19156

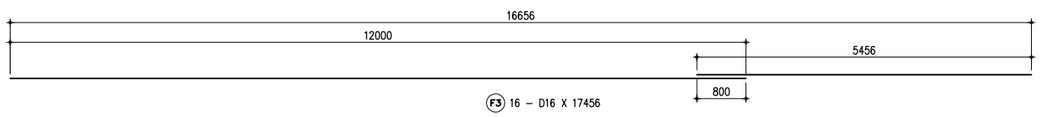

F3 16 – D16 X 17456

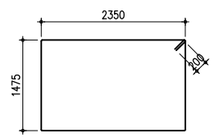

F4 112 – D20 X 8050

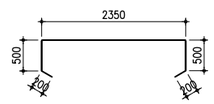

F5 16 – D16 X 3750

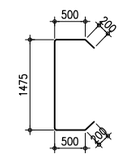

F6 26 – D16 X 2875

THE DEMOCRATIC SOCIALIST REPUBLIC OF SRI LANKA MINISTRY OF HIGHWAYS & ROAD DEVELOPMENT **Road Development Authority**	JICA JAPAN INTERNATIONAL COOPERATION AGENCY ORIENTAL CONSULTANTS COMPANY LIMITED in association with PACIFIC CONSULTANTS INTERNATIONAL	No / REVISION / DATE	COLOMBO OUTER CIRCULAR HIGHWAY PROJECT (NORTHERN SECTION 1) OVERPASS BRIDGE NO.9 REINFORCEMENT BAR ARRANGEMENT OF PIER (2/3)	DESIGNED BY: CHECKED BY: APPROVED BY: DWG. NO. K03-31

REINFORCEMENT OF P1 PIER (3) Scale 1:50

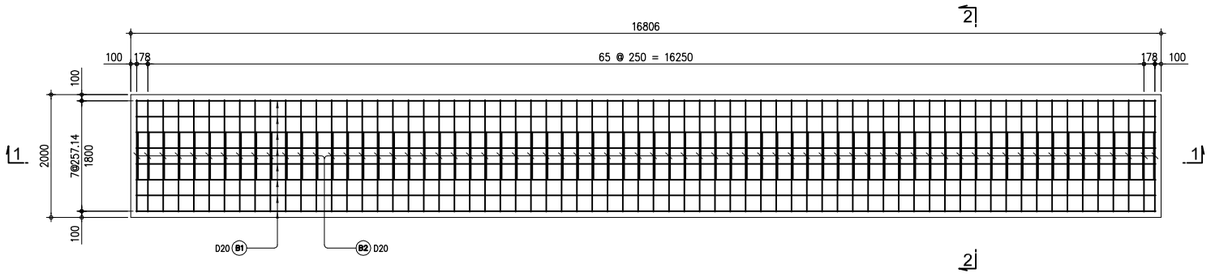

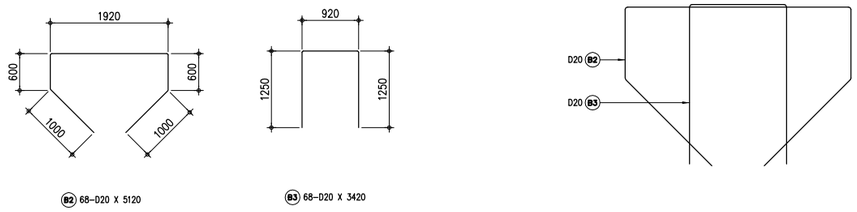

1 - 1

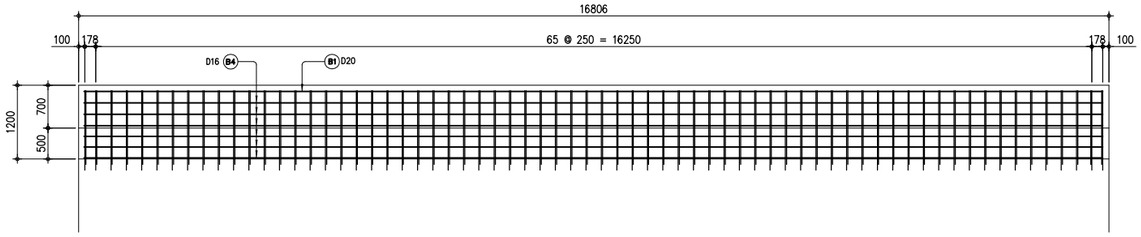

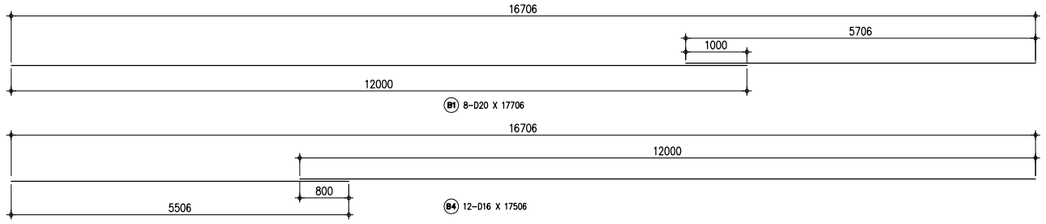

2 - 2

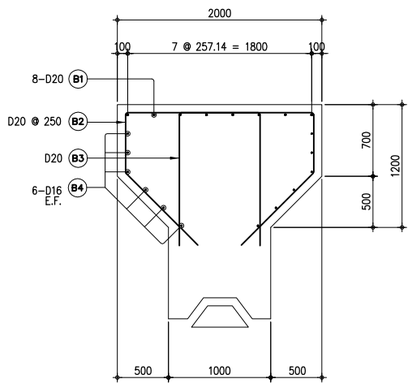

2–2 SECTION
SCALE 1:30

ESTIMATED QUANTITIES FOR PIER

REINFORCING BARS

LOCATION	BAR MARK	BAR SHAPE	SPACING	QTY. (pcs)	SIZE (mm)	DIMENSION mm (OUT TO OUT) a	b	c	d	e	f	LENGTH PER BAR (mm)	TOTAL LENGTH (m)	UNIT WEIGHT (kg/m)	TOTAL WEIGHT (kg)	CONCRETE VOLUME (m^3)
COLUMN	B1	AS SHOWN	AS SHOWN	8	20	17506						17506	140.05	2.466	345.36	
	B2	AS SHOWN	AS SHOWN	68	20	1000	600	1860	600	1000		5060	344.08	2.466	848.50	
	B3	AS SHOWN	AS SHOWN	68	20	1235	850	1235				3320	225.76	2.466	556.72	
	B4	AS SHOWN	AS SHOWN	12	16	17306						17306	207.67	1.579	327.91	
	C1	AS SHOWN	AS SHOWN	174	32	300	10090	300				10690	1860.06	6.313	11,742.56	
	C2	AS SHOWN	AS SHOWN	41	16	650	17306	650				18606	762.85	1.579	1,204.53	
	C3	AS SHOWN	AS SHOWN	41	16	650	17306	650				18606	762.85	1.579	1,204.53	
	C4	AS SHOWN	AS SHOWN	544	16	200	660	900	660	900	200	3520	1914.88	1.579	3,023.60	
	C5	AS SHOWN	AS SHOWN	68	16	200	500	900	500	200		2300	156.40	1.579	246.96	
	SUB-TOTAL QUANTITY FOR COLUMN =														19,500.68	163.775
PILECAP	F1	AS SHOWN	AS SHOWN	13	25	650	17856	650				19156	249.03	3.854	959.75	
	F2	AS SHOWN	AS SHOWN	13	25	650	17856	650				19156	249.03	3.854	959.75	
	F3	AS SHOWN	AS SHOWN	16	16	17456						17456	279.30	1.579	441.01	
	F4	AS SHOWN	AS SHOWN	112	20	200	2350	1475	2350	1475	200	8050	901.60	2.466	2,223.35	
	F5	AS SHOWN	AS SHOWN	16	16	200	500	2350	500	200		3750	60.00	1.579	94.74	
	F6	AS SHOWN	AS SHOWN	26	16	200	500	1475	500	200		2875	74.75	1.579	118.03	
	SUB-TOTAL QUANTITY FOR PILECAP														4,796.63	71.426
	SUB-TOTAL QUANTITY PIER														24,297.31	235.201

THE DEMOCRATIC SOCIALIST REPUBLIC OF SRI LANKA
MINISTRY OF HIGHWAYS & ROAD DEVELOPMENT
Road Development Authority

JICA JAPAN INTERNATIONAL COOPERATION AGENCY
ORICONSUL ORIENTAL CONSULTANTS COMPANY LIMITED
in association with
PACIFIC CONSULTANTS INTERNATIONAL

No	REVISION	DATE

COLOMBO OUTER CIRCULAR HIGHWAY PROJECT
(NORTHERN SECTION 1)

OVERPASS BRIDGE NO.9
REINFORCEMENT BAR ARRANGEMENT OF PIER (3/3)

DESIGNED BY:
CHECKED BY:
APPROVED BY:
DWG. NO. K03-32

REINFORCEMENT OF APPROACH SLAB (1) Scale 1:50

1 - 1

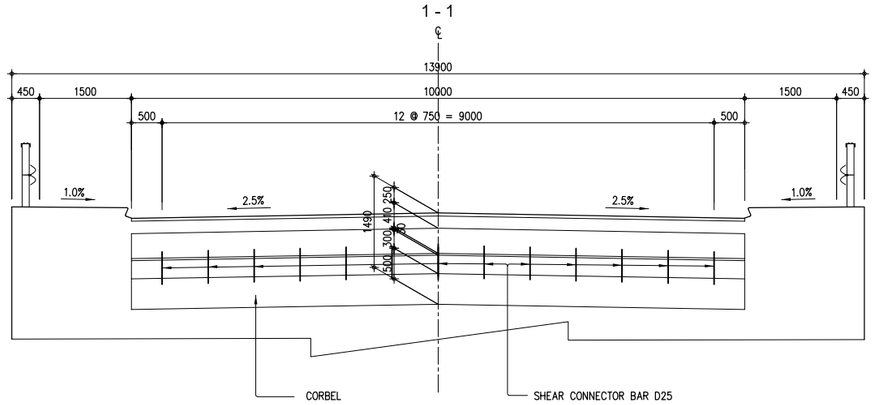

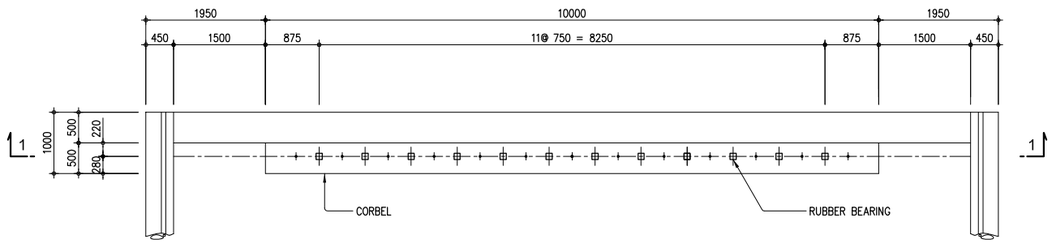

2 - 2

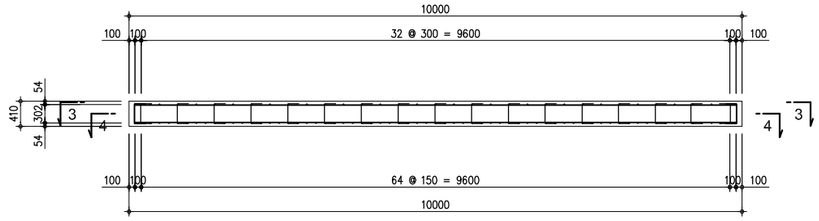

3 - 3

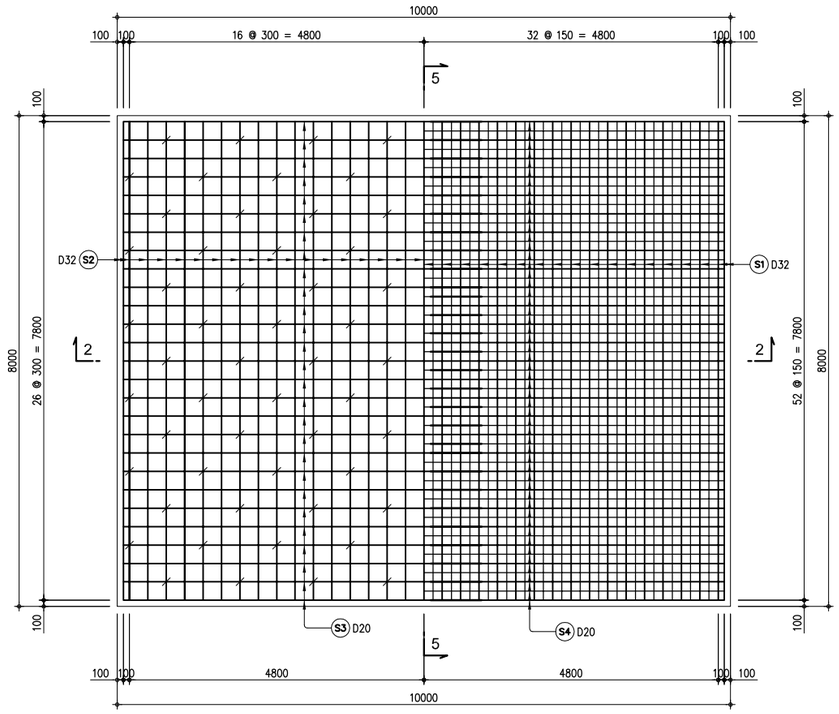

4 - 4

5 - 5

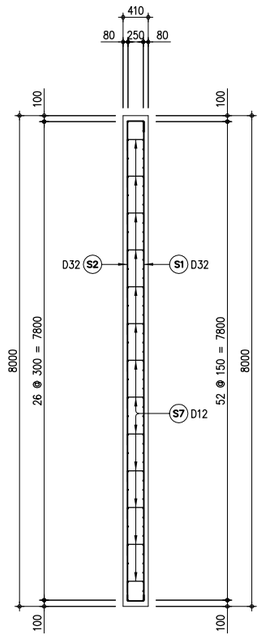

THE DEMOCRATIC SOCIALIST REPUBLIC OF SRI LANKA MINISTRY OF HIGHWAYS & ROAD DEVELOPMENT **Road Development Authority**	JICA JAPAN INTERNATIONAL COOPERATION AGENCY ORIENTAL CONSULTANTS COMPANY LIMITED in association with PACIFIC CONSULTANTS INTERNATIONAL	No / REVISION / DATE	COLOMBO OUTER CIRCULAR HIGHWAY PROJECT (NORTHERN SECTION 1) OVERPASS BRIDGE NO.9 REINFORCEMENT BAR ARRANGEMENT OF APPROACH SLAB (1/2)	DESIGNED BY: CHECKED BY: APPROVED BY: DWG. NO.	K03-33

REINFORCEMENT OF APPROACH SLAB (2)

DETAILED OF PEDESTAL Scale 1:10

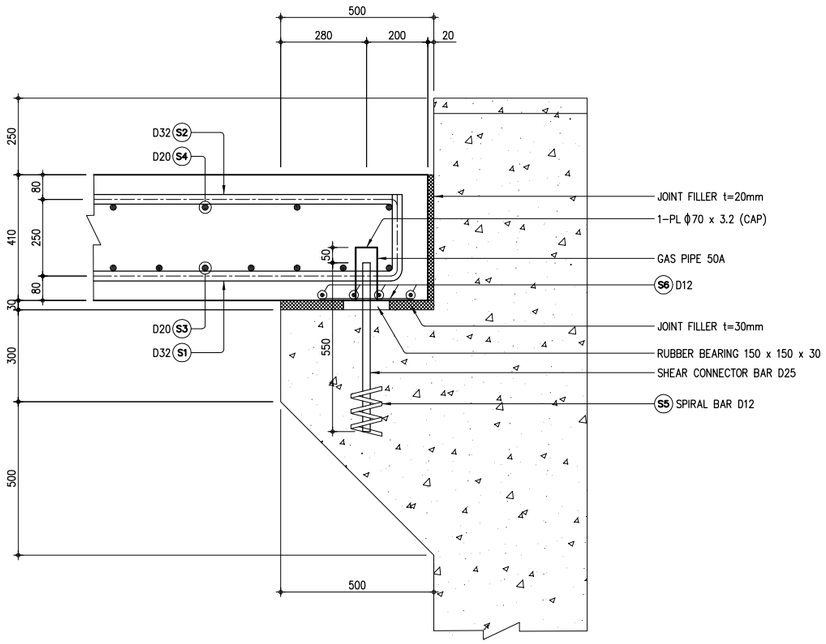

Scale 1:10

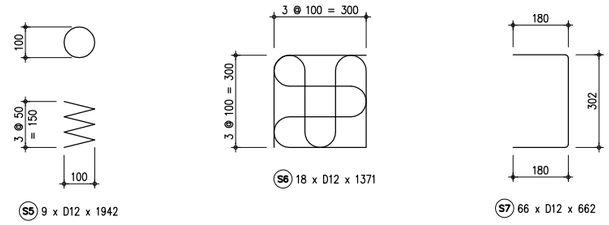

Scale 1:50

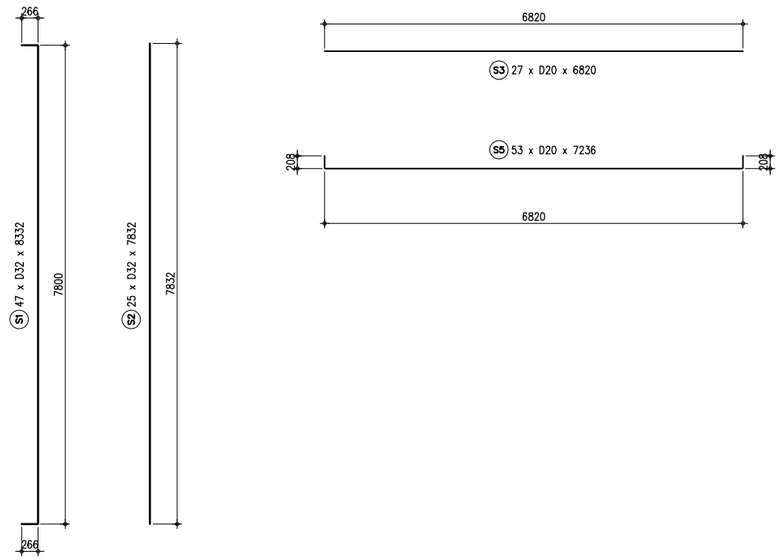

REINFORCING BARS										
BAR BENDING	BAR MARK	BAR SHAPE	QTY.	SIZE	DIMENSIONS a	DIMENSIONS b	LENGTH PER BAR (mm)	TOTAL LENGTH (m)	UNIT WEIGHT (kg/m)	TOTAL WEIGHT (kg)
	S1	A	47	D32	7800	532	8332	391.60	6.314	2472.59
	S2	B	25	D32	7832	–	7832	195.80	6.314	1236.28
	S3	C	27	D20	6820	–	6820	184.14	2.466	454.09
	S4	A	53	D20	6820	416	7236	383.51	2.466	945.73
	S5	E	9	D12	1942	–	1942	17.48	0.888	15.52
	S6	F	18	D12	1371	–	1371	24.68	0.888	21.91
	S7	A	66	D12	302	360	662	43.69	0.888	38.80
									D32	3708.87
									D20	1399.82
									D12	76.23
									TOTAL	**5184.92**
	SGP	50A	–	–	–	–	–	–	–	GAS PIPE
	PL	G	–	–	–	–	–	–	–	CAP
							CONCRETE			
							FORM			
							BEARING (T=30mm)			
							JOINT FILLER (T-20mm)			
							JOINT FILLER (T-30mm)			

NOTE: QUANTITIES ARE FOR (1) ONE APPROACH ONLY.

THE DEMOCRATIC SOCIALIST REPUBLIC OF SRI LANKA
MINISTRY OF HIGHWAYS & ROAD DEVELOPMENT
Road Development Authority

JICA JAPAN INTERNATIONAL COOPERATION AGENCY
ORICONSUL ORIENTAL CONSULTANTS COMPANY LIMITED
in association with
PACIFIC CONSULTANTS INTERNATIONAL

No	REVISION	DATE

COLOMBO OUTER CIRCULAR HIGHWAY PROJECT
(NORTHERN SECTION 1)

OVERPASS BRIDGE NO.9
REINFORCEMENT BAR ARRANGEMENT OF APPROACH SLAB

DESIGNED BY:	
CHECKED BY:	
APPROVED BY:	
DWG. NO.	K03-34

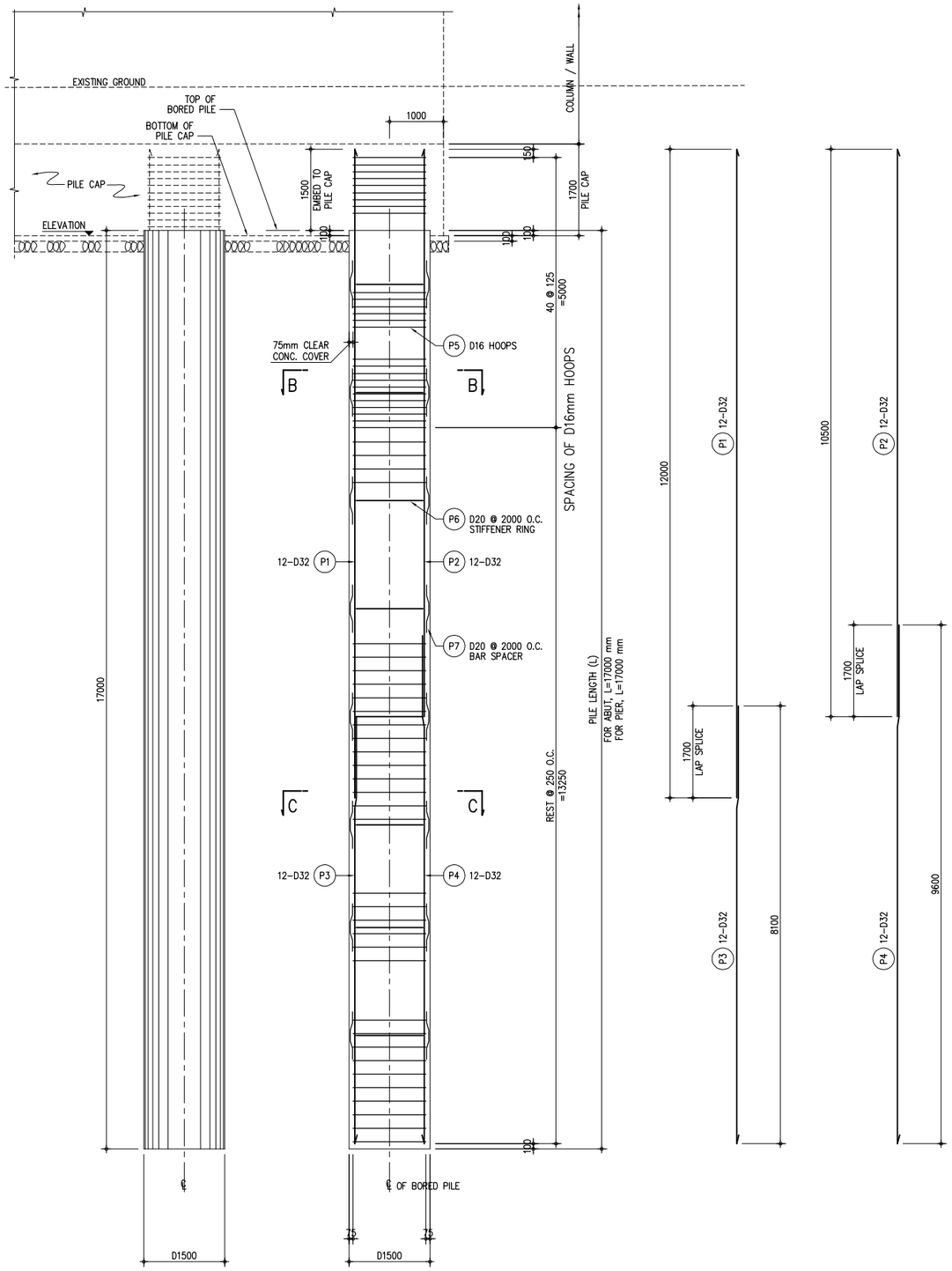

A TRANSVERSE ELEVATION
SCALE 1:50

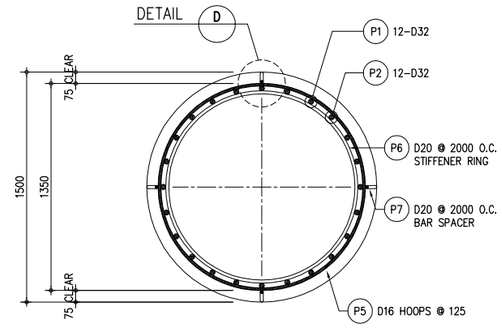

B SECTION
SCALE 1:20

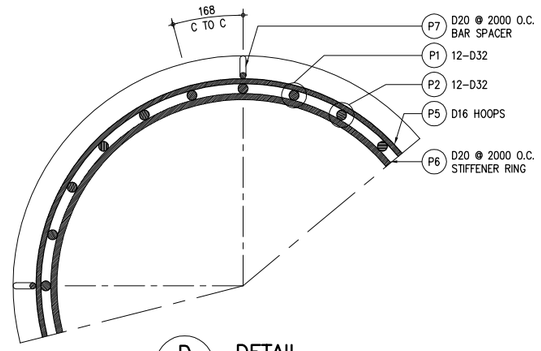

D DETAIL
SCALE 1:10

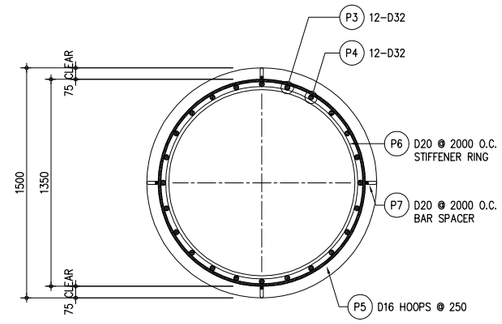

C SECTION
SCALE 1:20

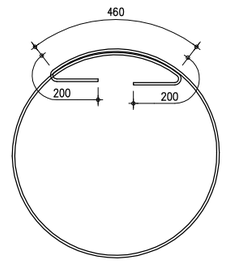

E HOOPS SPLICE DETAIL
SCALE NONE

REINFORCING BARS																CONCRETE
BAR BENDING	LOCATION	BAR MARK	BAR SHAPE	SPACING (mm)	QTY	SIZE	DIMENSION (mm)					LENGTH PER BAR (m)	TOTAL LENGTH (m)	UNIT WEIGHT (kg/m)	TOTAL WEIGHT (kg)	VOLUME (m^3)
							a	b	c	d	e					
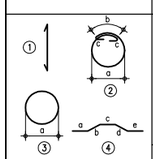	BORED PILE	P1	1	168	12	D32	12000	–	–	–	–	12.00	144.00	6.313	909.07	30.22
		P2	1	168	12	D32	10500	–	–	–	–	10.50	126.00	6.313	795.44	
		P3	1	168	12	D32	8000	–	–	–	–	8.00	96.00	6.313	606.05	
		P4	1	168	12	D32	9500	–	–	–	–	9.50	114.00	6.313	719.68	
		P5	2	125/250	94	D16	1350	460	200	–	–	5.10	99.10	1.579	156.48	
		P6	3	2000	8	D20	1254	460	–	–	–	4.40	35.20	2.466	86.80	
		P7	4	2000	32	D20	200	140	200	140	200	0.88	28.16	2.466	69.44	
															3,342.96	

THE DEMOCRATIC SOCIALIST REPUBLIC OF SRI LANKA
MINISTRY OF HIGHWAYS & ROAD DEVELOPMENT
Road Development Authority

JAPAN INTERNATIONAL COOPERATION AGENCY
ORIENTAL CONSULTANTS COMPANY LIMITED
in association with
PACIFIC CONSULTANTS INTERNATIONAL

No	REVISION	DATE

COLOMBO OUTER CIRCULAR HIGHWAY PROJECT
(NORTHERN SECTION 1)

OVERPASS BRIDGE NO. 9
D1500mm BORED PILE REBAR DETAILS (L=17.00m)

DESIGNED BY:	
CHECKED BY:	
APPROVED BY:	
DWG. NO.	K03-35

DIMENSIONS OF BEARING PAD

TYPE	Dimensions a' x b' x t (mm)	Chloroprene Layers		Reinforcement Plate				Surface Layer
		Thickness of Layer	Number of Layers	Transversal Width	Longitudinal Width	Thickness & Number		Thickness & Number
		te (mm)	ne	a (mm)	b (mm)	t1x n (mm)	t2 x n (mm)	ts x n (mm)
Fix	360 x 260 x 36	12	2	340	240	2 x 3	-	3 x 2
Move	410 x 310 x 54	12	3	390	290	2 x 4	-	3 x 2

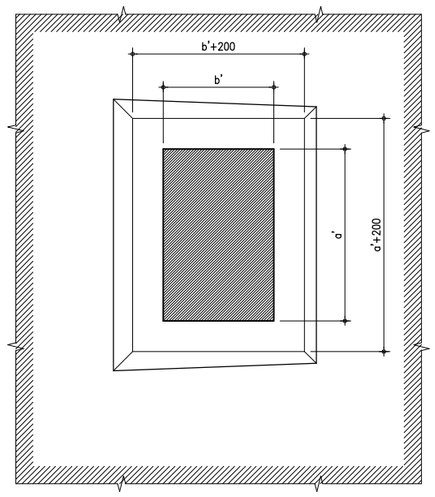

PLAN

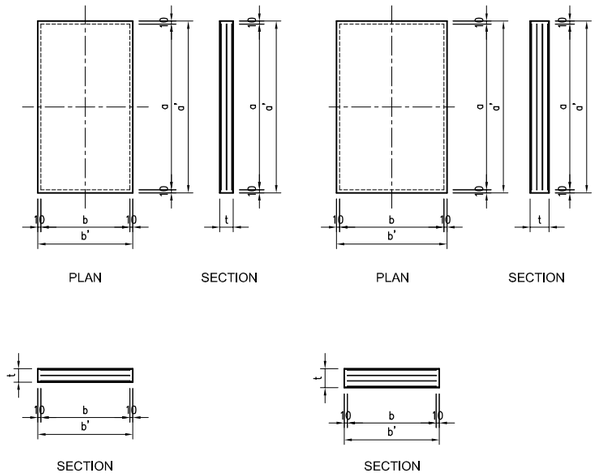

ELASTOMERIC MATERIAL (POLY-CHLOROPRENE)

ITEM		UNIT	REQUIRED VALUE	TEST METHOD
Static Shearing Elasticity Modulus		kgf/cm2	10 ± 1	JIS K6254
Hardness		-	A60 ± 5	JIS K6253
Elongation		%	440 or more	JIS K6251
Tensile Strength		Kg/cm2	150 or more	JIS K6251
Fatigue Test	Strength Changing Ratlon for 25 % Elongation	%	between -10 and +100	JIS K6257 (100°C x 70 hrs)
	Elongation Ratio	%	-50 or more	
Ratio of Compressive Permanent Strain		%	35 or less	JIS K6262 (100°C x 22hrs)
Ozone Deterioration		-	No crack to be observed by naked eye	JIS K6259
Moisture Absorption (Mass Change Ratio Due to Water)		%	10 or less	JIS K6258
Low Temperature Resistance		Degree	-30°C or less	JIS K6260
Resistance to Stripping		kgf/cm	7 or more	JIS K6256

REINFORCEMENT PLATE (STEEL PLATE)

ITEM	UNIT	REQUIRED VALUE	TEST METHOD
Ultimate Strength	N/mm2	400 or more	JIS G3101
Elongation	%	21 or more	
Yield Strength	N/mm2	245 or more	

Note: All Elastomeric Bearing Pads shall be designed in accordance with Japan Road Association Standard or other equivalent Standard

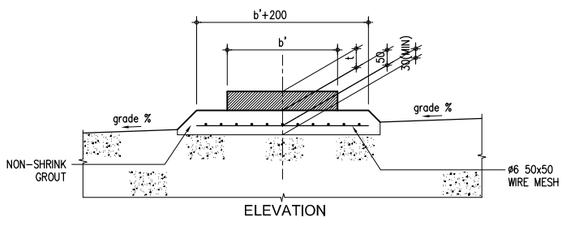

1 / – BEARING PAD
SCALE 1:10

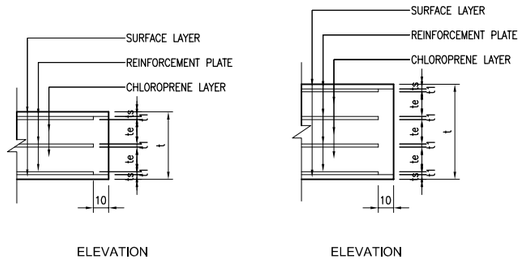

A / – 2 LAYERS TYPE
SCALE NTS

B / – 3 LAYERS TYPE
SCALE NTS

LOCATIONS OF ELASTOMERIC BEARING PADS

BRIDGE NO.			OB-09			Total Number
BRIDGE TYPE			PC-I			
LOCATION			A1	P1	A2	
SUPPORT CONDITION			M	F	M	
ELASTOMERIC BEARING PAD	FIX	360 x 260 x 36		16		
	MOVE	410 x 310 x 54	8		8	8

THE DEMOCRATIC SOCIALIST REPUBLIC OF SRI LANKA MINISTRY OF HIGHWAYS & ROAD DEVELOPMENT **Road Development Authority**	JAPAN INTERNATIONAL COOPERATION AGENCY ORIENTAL CONSULTANTS COMPANY LIMITED in association with PACIFIC CONSULTANTS INTERNATIONAL	No / REVISION / DATE	COLOMBO OUTER CIRCULAR HIGHWAY PROJECT (NORTHERN SECTION 1) OVERPASS BRIDGE NO.9 DETAILS OF ELASTOMERIC BEARING SHOE	DESIGNED BY: CHECKED BY: APPROVED BY: DWG. NO.	K03-36

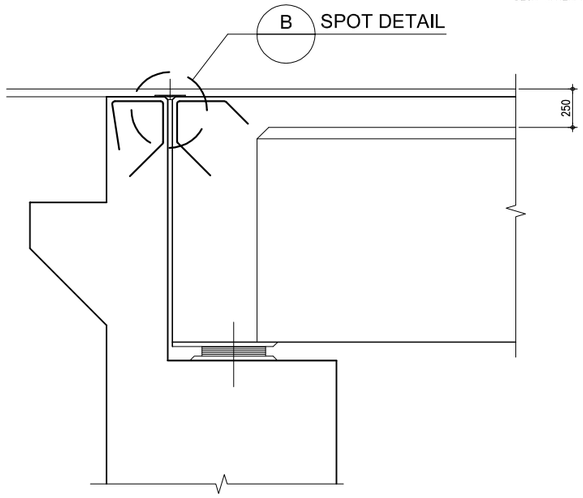

A ELEVATION
SCALE 1:20

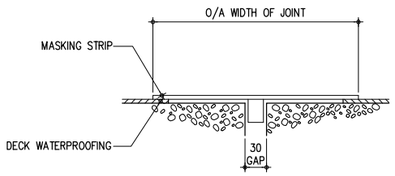

1. EXPANSION GAP COVERED WITH MASKING STRIP (HARDBOARD OR PLYWOOD) WITH WOOD FILLET ENGAGING IN EXPANSION GAP WITH SUFFICIENT CLEARANCE TO ALLOW FOR THERMAL MOVEMENTS.

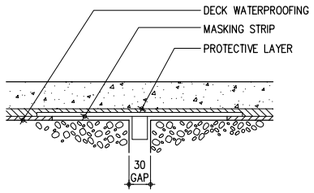

2. SURFACING LAID OVER JOINT.

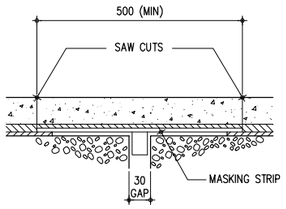

3. SAW CUT EACH SIDE OF MASKING STRIP.

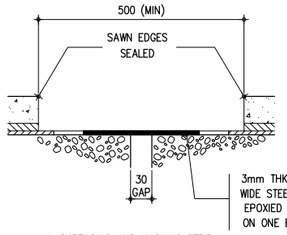

4. SURFACING AND MASKING STRIP REMOVED AND EXPOSED CONCRETE PREPARED AND CLEANED. SAWN EDGES PRIMED WITH WATERPROOF SEALER.

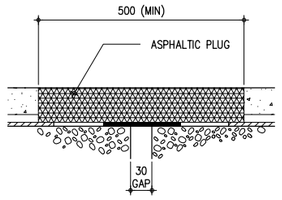

5. FOR A BONDED SYSTEM THE JOINT MATERIAL CAN NOW BE INSTALLED.

C TYPICAL INSTALLATION PROCEDURE
SCALE N T S

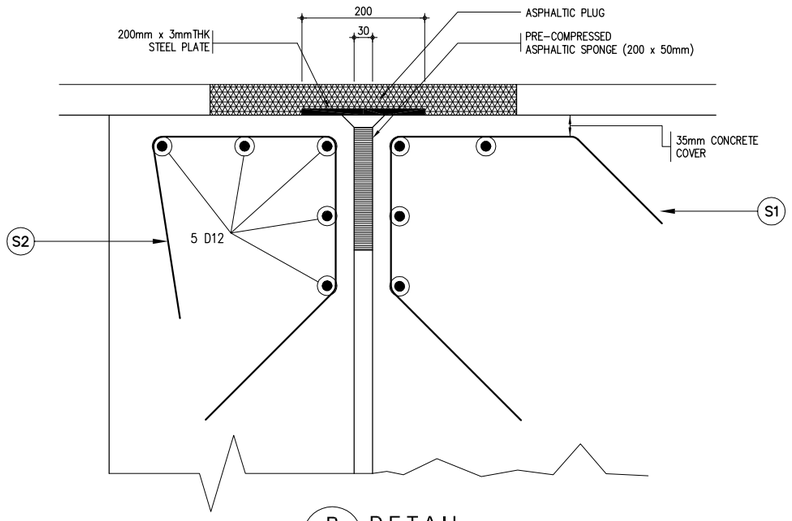

B DETAIL
SCALE 1:5

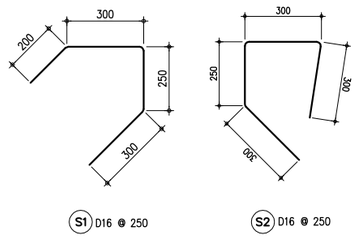

BAR BENDING DIAGRAM

1 DETAIL OF EXPANSION JOINT
SCALE AS SHOWN

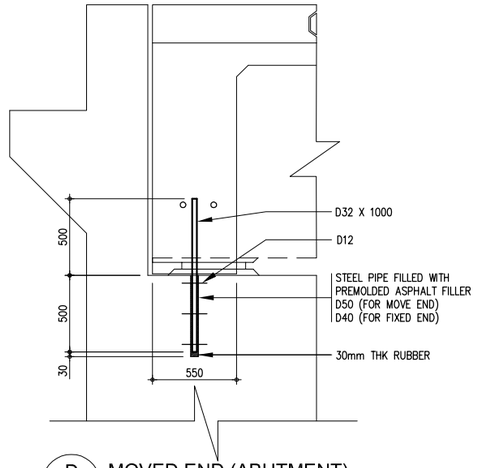

D MOVED END (ABUTMENT)
SCALE 1:20

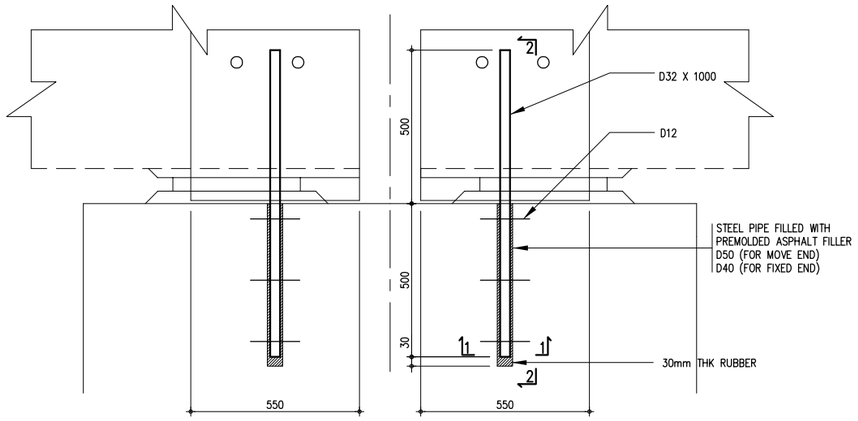

E FIXED END (PIER)
SCALE 1:10

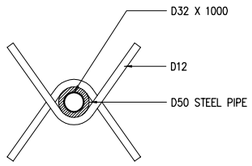

F SECTION 1-1
SCALE 1:5

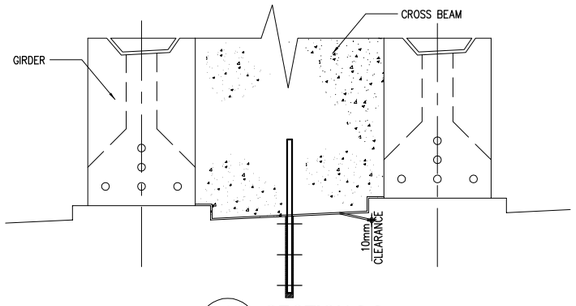

G SECTION 2-2
SCALE 1:20

2 ANCHORAGE DETAIL TYPICAL (MOVED AND FIXED)
SCALE AS SHOWN

THE DEMOCRATIC SOCIALIST REPUBLIC OF SRI LANKA MINISTRY OF HIGHWAYS & ROAD DEVELOPMENT **Road Development Authority**	JAPAN INTERNATIONAL COOPERATION AGENCY ORIENTAL CONSULTANTS COMPANY LIMITED in association with PACIFIC CONSULTANTS INTERNATIONAL	No / REVISION / DATE	COLOMBO OUTER CIRCULAR HIGHWAY PROJECT (NORTHERN SECTION 1) OVERPASS BRIDGE NO. 09 DETAILS OF EXPANSION JOINT / ANCHORAGE DETAIL TYPICAL (MOVED AND FIXED)	DESIGNED BY: CHECKED BY: APPROVED BY: DWG. NO.	 K03-37

LAYOUT PLAN OF DRAINAGE (OB-08)

SCALE 1:100

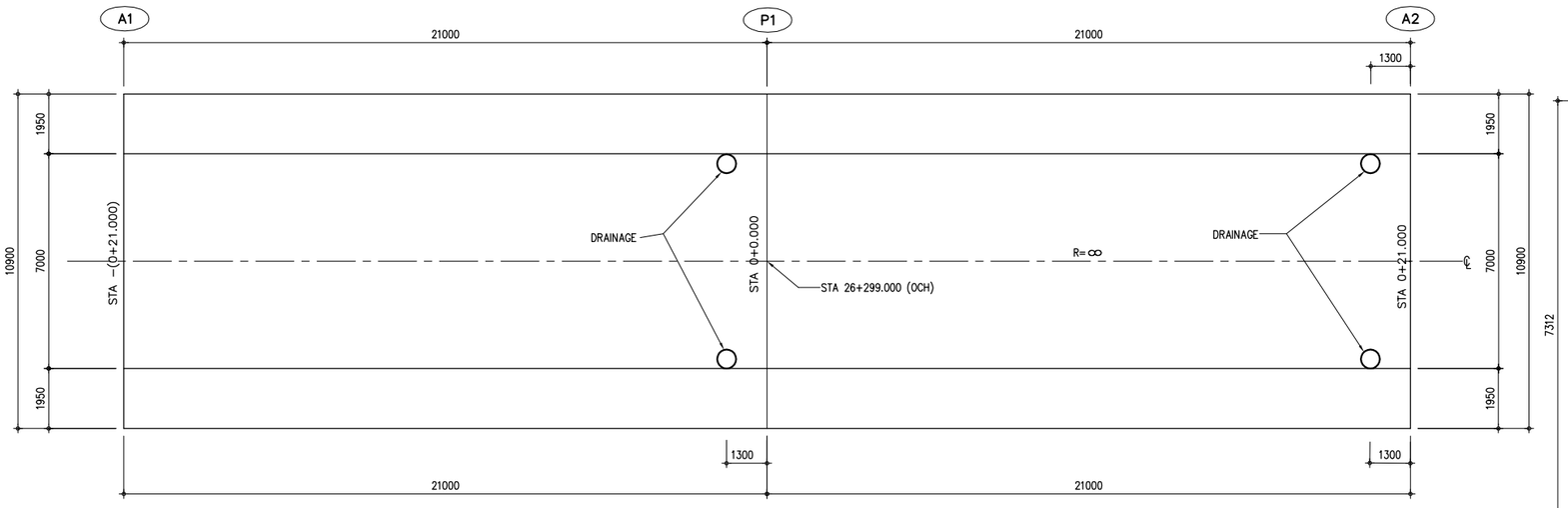

SCALE 1:50

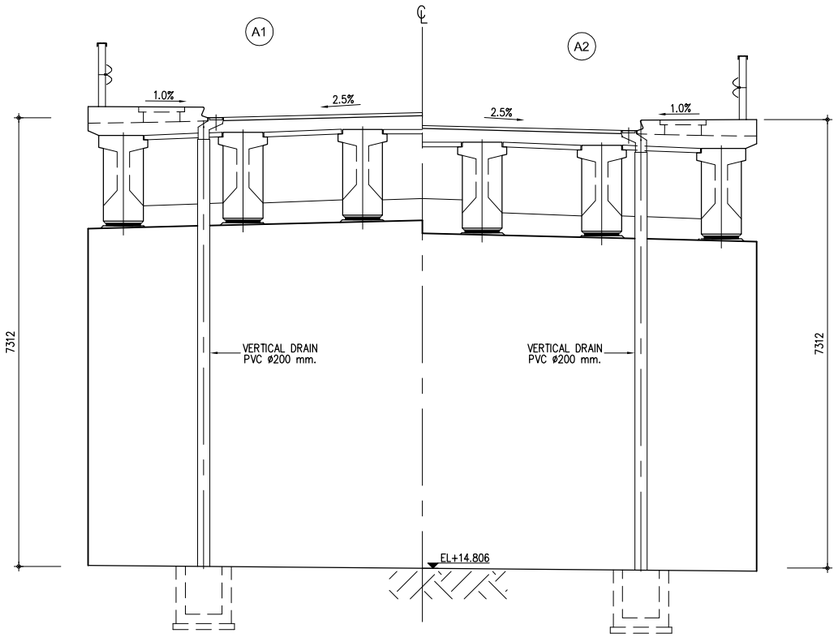

THE DEMOCRATIC SOCIALIST REPUBLIC OF SRI LANKA MINISTRY OF HIGHWAYS **Road Development Authority**	JAPAN INTERNATIONAL COOPERATION AGENCY ORIENTAL CONSULTANTS COMPANY LIMITED in association with PACIFIC CONSULTANTS INTERNATIONAL	No / REVISION / DATE	THE OUTER CIRCULAR HIGHWAY TO THE CITY OF COLOMBO OVERPASS BRIDGE NO.9 DETAILS OF DRAINAGE	DESIGNED BY: CHECKED BY: APPROVED BY: DWG. NO.	K03-38

BRIDGE MESH FENCE (1)
TYPE-1

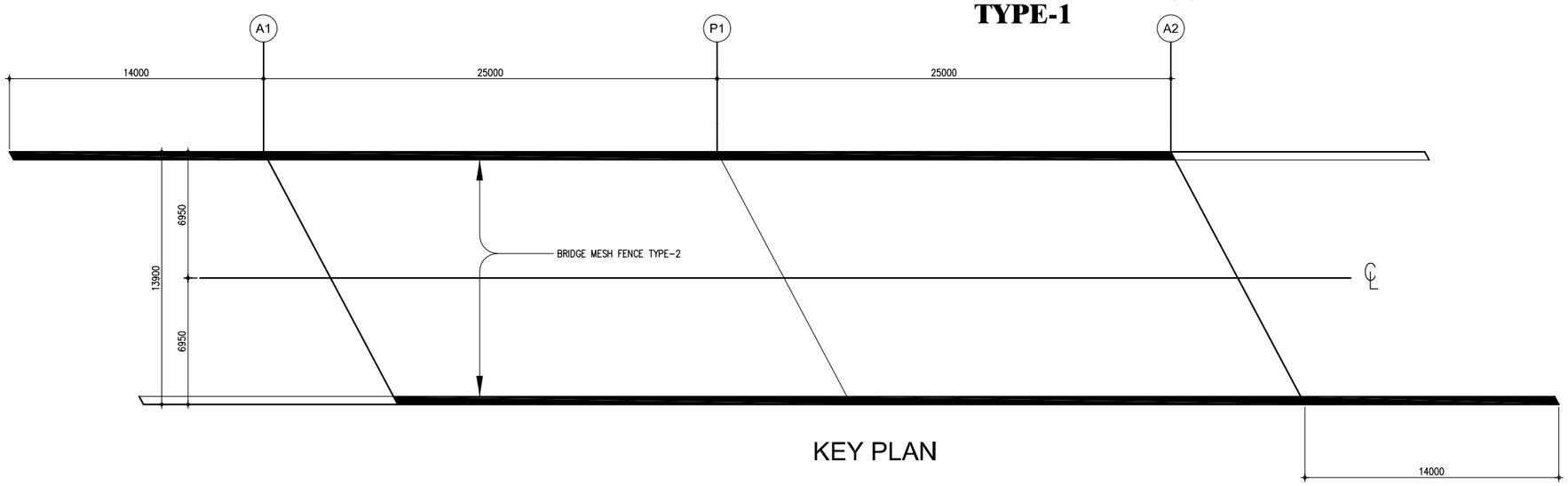

KEY PLAN

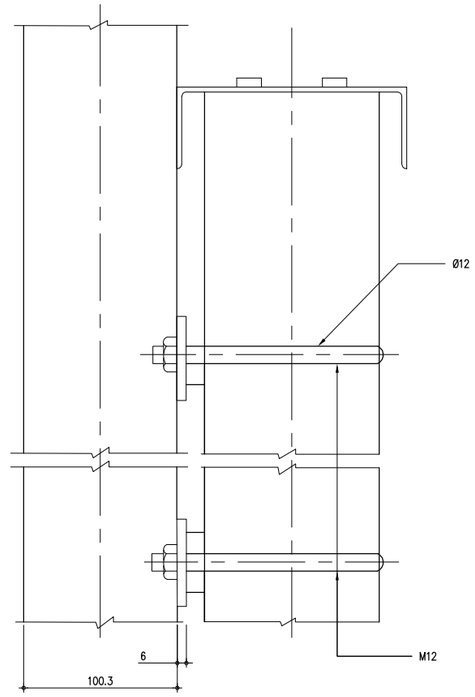

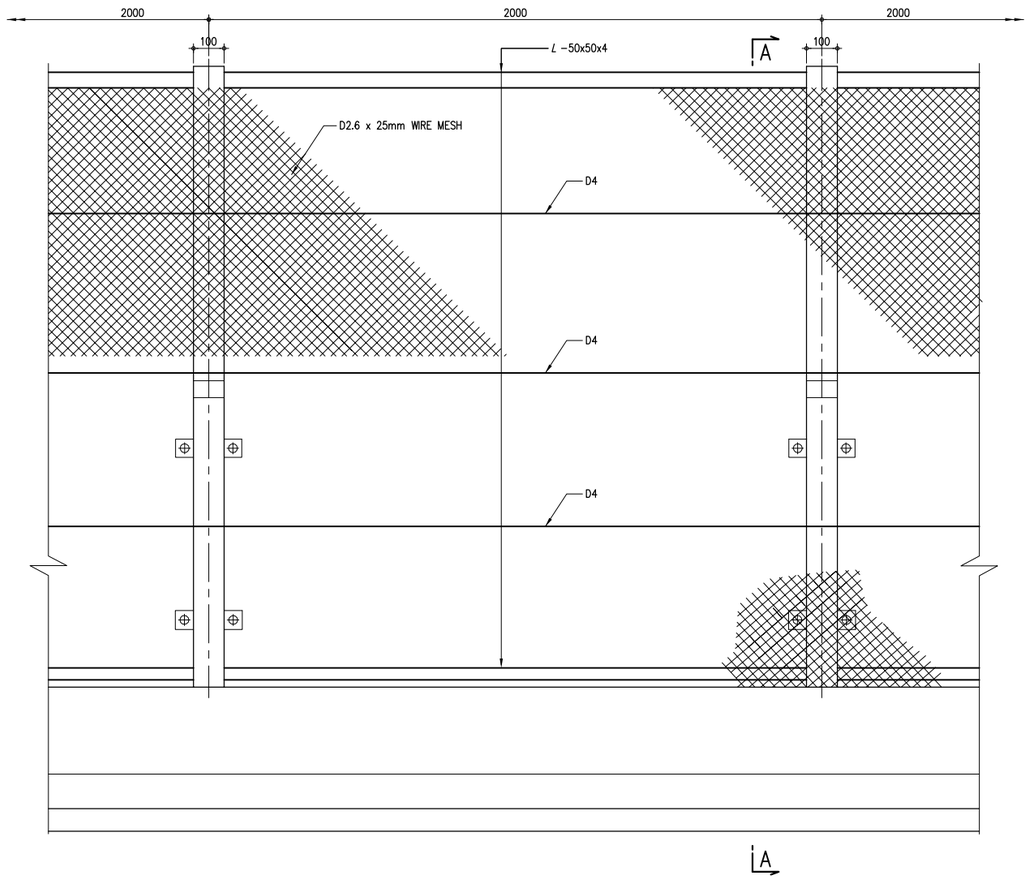

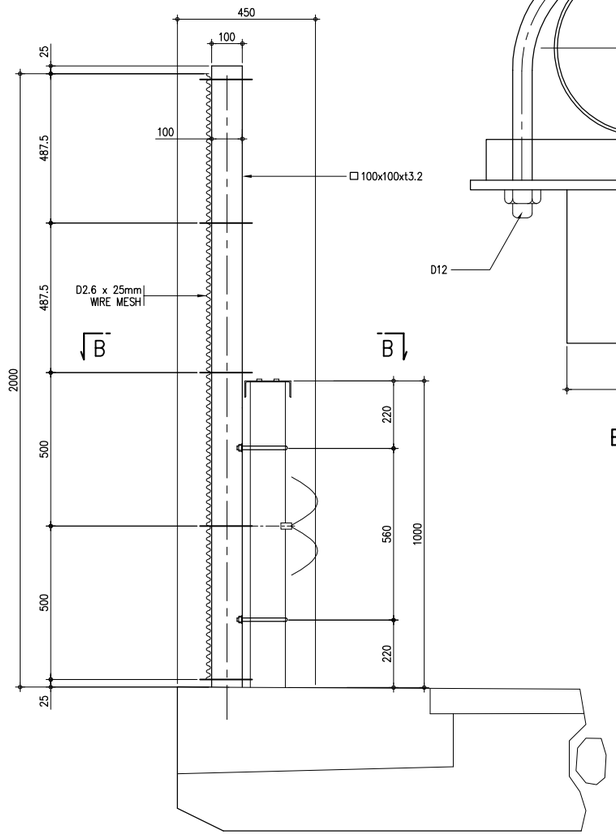

A – A

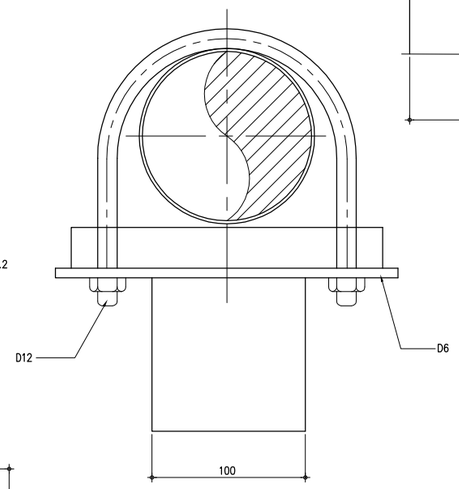

B – B

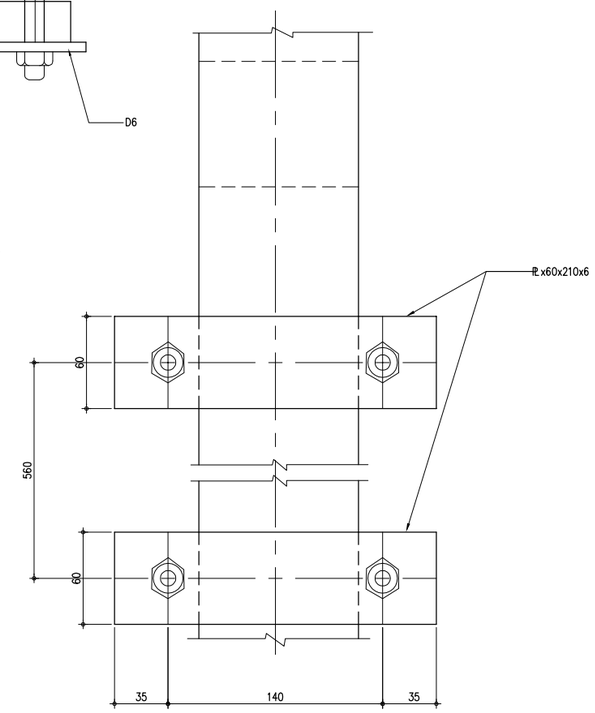

THE DEMOCRATIC SOCIALIST REPUBLIC OF SRI LANKA MINISTRY OF HIGHWAYS & ROAD DEVELOPMENT **Road Development Authority**	JAPAN INTERNATIONAL COOPERATION AGENCY ORIENTAL CONSULTANTS COMPANY LIMITED in association with PACIFIC CONSULTANTS INTERNATIONAL	No / REVISION / DATE	COLOMBO OUTER CIRCULAR HIGHWAY PROJECT (NORTHERN SECTION 1) OVERPASS BRIDGE NO.9 BRIDGE MESH TYPE 1	DESIGNED BY: CHECKED BY: APPROVED BY: DWG. NO.	K03-39