別添 5：テクニカル・ノート（T/N）

JICA Survey Team
CTI Engineering International Co., Ltd.
Tachibana Annex Building
2-25-14 Kameido
Koto-ku, Tokyo 136-0071, Japan
Phone: +81-3-3638-2561
Fax: +81-3-3638-2560

TECHNICAL NOTES

ON

PREPARATORY SURVEY ON THE PROJECT

FOR THE DISASTER RESTORATION OF TEOUMA BRIDGE

IN REPUBLIC OF VANUATU

The Preparatory Survey Team (Team) commissioned to undertake the Outline Design, under Japan International Cooperation Agency (JICA) conducted field surveys and review of existing documents and held several discussions on the technical aspect with the implementing agency and other relevant agencies in relation to "The Project for the Disaster Restoration of Teouma Bridge in Republic of Vanuatu".

This note is signed between The Team and Ministry of Infrastructure and Public Utilities (MIPU) to share mutual understandings and agreement as mentioned in Appendix-1.

Port Vila, 22nd May, 2018

Mr. Sam Namuri
Acting Director General
Ministry of Infrastructure and Public Utilities (MIPU)

Mr. Yoshihisa NODA
Chief Consultant
JICA Preparatory Survey Team
CTI Engineering International Co., Ltd.

WITNESS:

Mr. Gorge Junior
Acting Director
Public Works Department(PWD)
Ministry of Infrastructure and Public Utilities (MIPU)

1. Project Background

Most of the residents of Efate island where the capital locates are living along the ring road. And the ring road is playing an important role of the inland transportation. Teouma bridge has been constructed on the Teouma river which is the biggest in the island. It is located at the entrance to the capital from an eastern part of island.

The bridge was completely destroyed by the earthquake whose magnitude was M7.2 and earthquake center was on the western ocean of the Efate island. To response to that, the bridge was reconstructed by the Japan's Grant Aid Program "THE PROJECT FOR REHABILITATION OF BRIDGES ON THE RING ROAD IN THE EFATE ISLAND IN THE REPUBLIC OF VANUATU" in 2003. However, the reconstructed Teouma bridge had been blocked for six days due to the damage of the approach road on right bank by Cyclone Pam in 2015. The damage was caused by the changing of river channel. The bridge is in the state of emergency restoration and at a risk being of destroyed and blocked by the flood now.

In this situation, JICA conducted the data collection survey for reconstruction of Teouma bridge to confirm the causes and measures of the bridge. 1. Stabilization of the river channel 2. Increase of the discharge capacity by extension of the bridge and 3. Overflow approach road have been proposed. And, the government of Vanuatu has requested the full-scale rehabilitation work for Teouma bridge to the government of Japan.

2. General Items

2.1 Interim Report

- MIPU has basically agreed regarding the contents of the Interim Report (IT/R) submitted by the Team on May 04, 2018.

2.2 Project Scope

Project Scope which was proposed in the interim report has been confirmed by MIPU as follows.

I. Bridge : Plate Girder Type, 2 spans, Road width 8m (Carriage way:3.0m × 2 + Shoulder:1.0m×2)

II. Riverbank Protection: Reinforced Concrete Crib Type, 250m upstream, 110m downstream

III. Approach Road: Embankment approx. L=600m, Pipe Culvert ϕ 1.5×6nos or equivalent

2.3 Consistency with Future Plan

MIPU clarified that currently there are no plans/projects for rehabilitation of Teouma bridge. Therefore, any development plan to be implemented after this project that is anticipated to affect this project will make its plan consistent with the scope of this project.

2.4 Utilization of Existing Bridge

Existing Pony Truss bridge shall not be utilized for the project for the disaster restoration of

Teouma bridge due to the insufficient width to comply with the requirement of Vanuatu Resilient Road Manual.

2.5 Provision of Temporary Bridge

The Team confirmed that MIPU does not have any temporary bridges in its possession that could be used on detours during the construction period.

2.6 Removal/Demolition of Existing Bridges

Since the reconstructed bridge is aligned along the present alignment, the Project will include removal of existing bridges and installation/removal of temporary detour roads.

2.7 Design Obstacles

The following facilities/objects are likely to be affected for the implementation. These facilities shall be appropriately relocated by the MIPU if these are really affected in the design.

No.	Potential Obstacles	Pictures
1	Overhead Power Line	
2	Fences	

3. Technical Items

3.1 Road Category and Road Standard

- The road classification of the road around Teouma bridge in accordance with the Vanuatu Resilient Roads Manual -June 2014- (VRRM) is Arterial roads.
- The traffic class at Teouma bridge in accordance with VRRM is T4.

Table 1 Traffic Class

Traffic Classes	TRAFFIC Vehicle per day) (vpd)	Design Parameter
T4	＞500	2 lanes
T3	200 - 500	2 lanes
T2	50 - 200	2 lanes
T1	＜50	1 lane

3.2 Applicable Standards

The following Vanuatu Resilient Roads Manual and/or International Standards such as Austroads, Australian Manual, and Japanese Standards would be applied for planning and design of bridge/roads, structures and road ancillaries.

1) Vanuatu Resilient Roads Manual -JUNE 2014- (VRRM)
2) Austroads (2009)
3) Australian Standards
4) Specifications for Highway Bridges (Japan Road Association) / Japanese Standard
5) Other reference documents and standards

3.3 Design Speed

Design speed in accordance with the Vanuatu Resilient Roads Manual is 60km/h as per the table below.

Table-2 Design Speed

Traffic Classes	T4	T3	T2	T1
Rolling	40 km/h	30 km /h	30 km / h	10 km / h
Flat	60 km /h	40 km /h	40 km /h	30 km /h

3.4 Hydrological Designing Parameters

Element	Criteria	Source / Comments
ARI (Average Recurrence Interval)	100 years	
Free board	50cm	
HWL	8.4m	

3.5 Road Alignment

Element	Criteria	Source / Comments
Horizontal Alignment	To follow the existing alignment	
Longitudinal Alignment	To be adjusted according to the new elevation of the bridge	
Bridge	To be constructed on the existing alignment	
Detour road / bridge	To be constructed downstream of the existing bridge	

3.6 Geometric Condition and Others

Element	Criteria	Source / Comments
Stopping sight distance	85 m	Adopted highest value of: Section 9.2.1 (c), VRRM
Minimum Curve Radius	100m	Section 9.2.1 (c), VRRM
Cross Section	2 x 3.0 m wide traffic lanes with 2 x 1.0 m wide shoulders on both sides	VRRM Appendix B, Section 9.2.1 (a)
Pavement Surfacing	Sprayed bituminous seal	Road: VRRM
Pavement Layers	Minimum 250 mm thick base course over minimum 5% CBR subgrade	Section 9.2.2 (a), VRRM Subject to traffic loading design during detailed design
Road Side Drains	Trapezoidal shape with maximum 2H:1V side slopes	Section 9.2.3, VRRM
Slope of proposed embankment	1:1.5 ～ 1:2.0	Section 9.2.3, VRRM
Guard Rail	More than 3m embankment	JIS (Japanese Industrial Standards)
Line Marking	Double white lines (BB) applied to all new pavement surfacing Edge lines to bridges and where required to delineate footways	AS1742.2

3.7 Bridge Type and Width

The type of the bridge shall be plate girder type due to the easy maintenance. The typical cross section is shown in Figure-1. Mount up footpath shall not be provided for uniformity of the approach road.

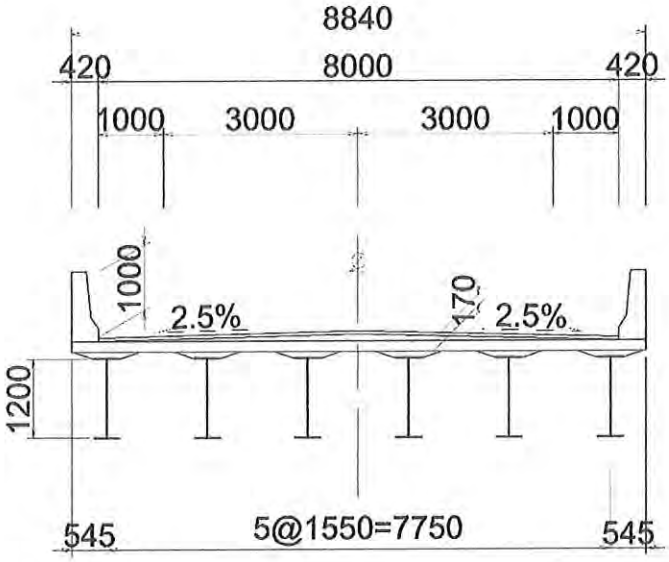

3.8 Bridge Design Condition

Element	Criteria	Source/Comment
Applied Specification	SPECIFICATION FOR HIGHWAY BRIDGRES MARCH 2012 Issued by JAPAN ROAD ASSOCIATION	
Design	T20 Truck load, A-Live Load specified in SPECIFICATION FOR HIGHWAY BRIDGRES	Equivalent to T44 truck load and L44 lane load
Seismic Condition	SPECIFICATION FOR HIGHWAY BRIDGRES MARCH 2012	
Cross section	6.5m for carriage way (2×3m lane, 2×1.00m shoulders)	Following VRRM
Free Board	0.5m	In compliance with Australian Standard and Consistent with ADB project

3.9 Basic Condition of Riverbank Protection

Element	Description
Design horizontal alignment	The horizontal scoured alignment shall be improved. 250m upstream, 110m downstream shall be improved.
Design longitudinal alignment	1:1800 (vertical : horizontal)
Design Cross Section	Width at design flood level (8.4m) : 50m

	Design slope gradient : 1:1.5 Berm : 1.5m Maintenance road : 4m
Scoring depth	2m below the improved river bed
Right Bank	Bank protection shall be provided for the stabilization of the river. Elevation of the riverbank is the same as existing ground.
Left Bank	Elevation of the riverbank shall be EL 5.0m.

3.10 Riverbank Protection

Type : Reinforced Concrete Crib

Description : Concrete Crib (30cm) filled with concrete or concrete with cobble stone (grouted riprap) (20cm)

4. Temporary Yard

Temporary Yards shall be provided by MIPU side during the construction period. The Team confirmed that there should be one location, around 2km east side of Fletcher compound as shown in the Figure-1 in Attachment-1, approximately 10,000m2, for establishing offices (consultant office and contractor's office), batching plant and other material stocks.

5. Soil Disposal Yard

The Team confirmed that there should be two locations, one is Etas rubbish dump for the unsuitable materials such as soil coming out from the clearing and grubbing, and river bed excavation, another is the temporary yard mentioned in the former chapter the suitable material coming out from the river bed excavation and the removal of the detour road, etc. as shown in the Figure-1 and 2 in Attachment-1.

6. Stock yard for the dismantled steel members of the existing Teouma bridge

Stock yard for the dismantled steel member of the existing Teouma bridge shall be provided by MIPU side prior to the commencement of the project. The Team confirmed that there should be PWD sheaf division as shown in Figure-3 in Attachment-1. How to reuse of existing Teouma bridge will be studied by MIPU.

7. Detour road during construction

The plan for the detour road during construction as of May 2018 is shown in Figure-4 in Attachment-1. This plan might be revised according to the results of the survey.

Attachment 1: Temporary Yard

Figure-1 Temporary Yard / Soil Disposal Yard for Suitable materials

Figure-2 Temporary Yard / Soil Disposal Yard for suitable materials

Figure-3 Stock yard for the dismantled steel member of the existing Teouma bridge

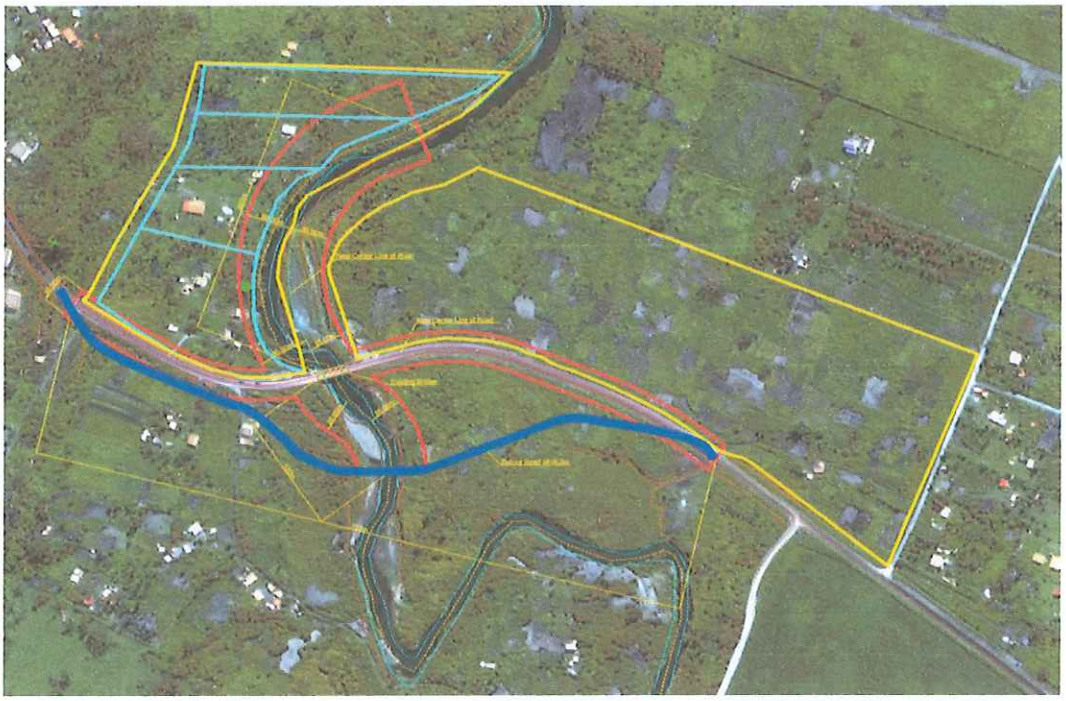

Figure-4 Plan for detour road during construction (Blue line)

別添 6：概略設計図

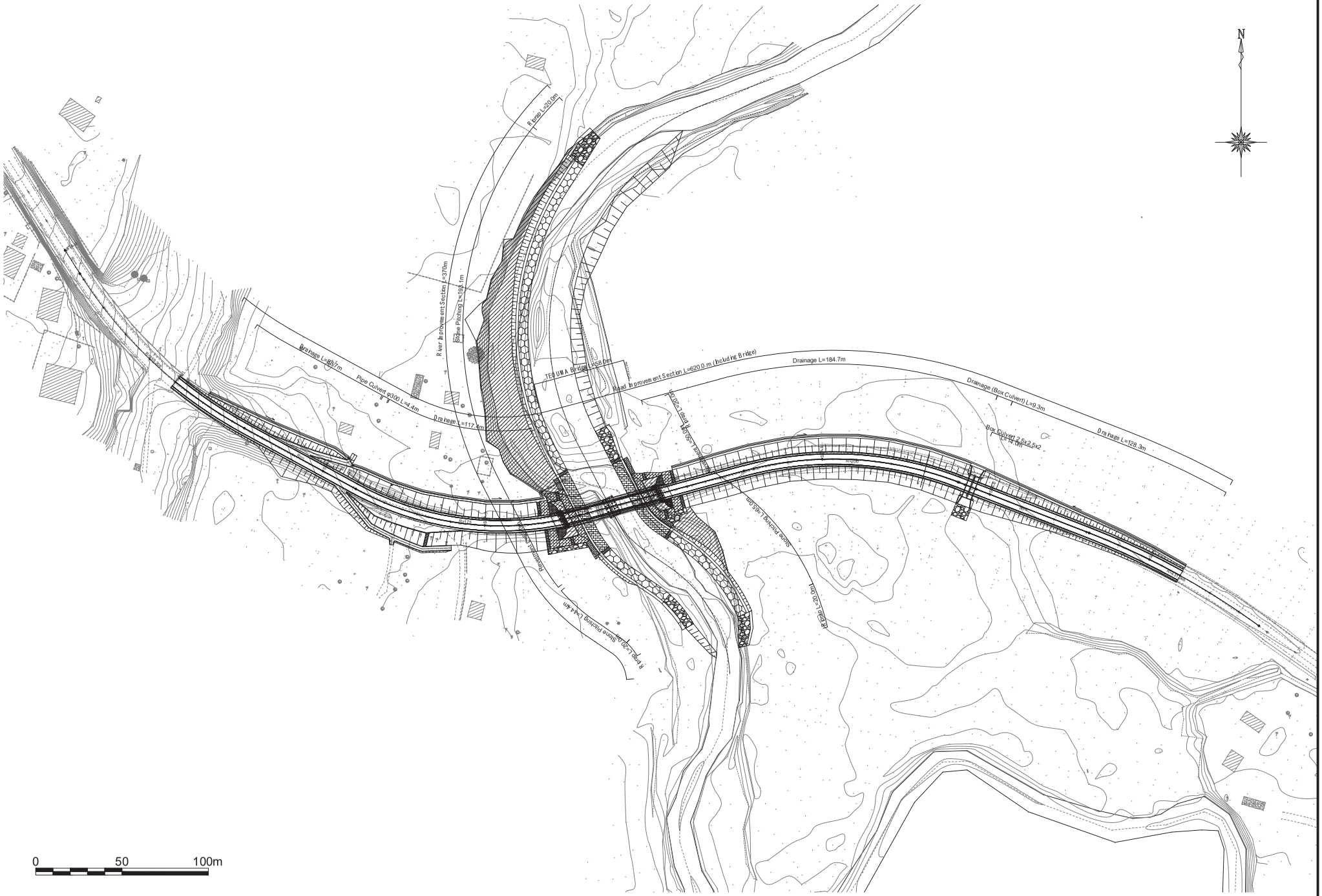

REV	DESCRIPTION	BY	DATE

REPUBLIC OF VANUATU
PUBLIC WORKS DEPARTMENT
MINISTRY OF INFRASTRUCTURE AND PUBLIC UTILITIES

PROJECT:
PREPARATORY SURVEY ON THE PROJECT FOR THE DISASTER RECONSTRUCTION OF TEOUMA BRIDGE IN REPUBLIC OF VANUATU

DESCRIPTION:
Overall Plan

CONSULTANTS REFERENCE	DRAWN	CHECKED	APPROVED	P.W.D REFERENCE CHECKED	P.W.D REFERENCE APPROVED	SCALE (A3 SIZE)	DRAWING NO.	SHEET NO.
CTI ENGINEERING INTERNATIONAL CO., LTD. KOKUSAI KOGYO CO., LTD.						1:2000	1	

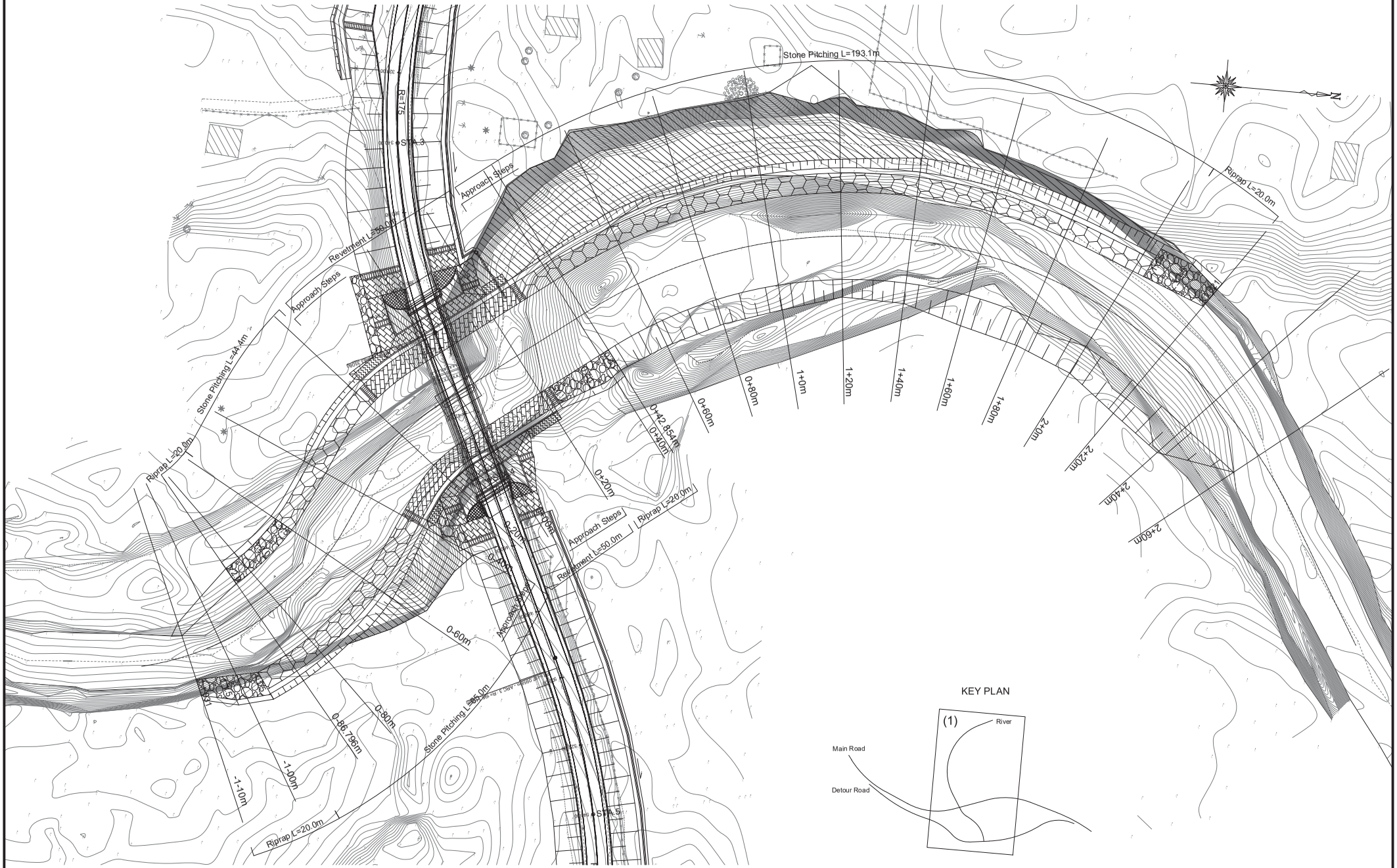

REV	DESCRIPTION	BY	DATE

REPUBLIC OF VANUATU
PUBLIC WORKS DEPARTMENT
MINISTRY OF INFRASTRUCTURE AND PUBLIC UTILITIES

PROJECT:
PREPARATORY SURVEY ON THE PROJECT FOR THE DISASTER RECONSTRUCTION OF TEOUMA BRIDGE IN REPUBLIC OF VANUATU

DESCRIPTION:
PLAN
(REVETMENT)

CONSULTANTS REFERENCE	DRAWN	CHECKED	APPROVED	P.W.D REFERENCE CHECKED	P.W.D REFERENCE APPROVED	SCALE (A3 SIZE)	DRAWING NO.	SHEET NO.
CTI ENGINEERING INTERNATIONAL CO., LTD. KOKUSAI KOGYO CO., LTD.						1:1000	2	

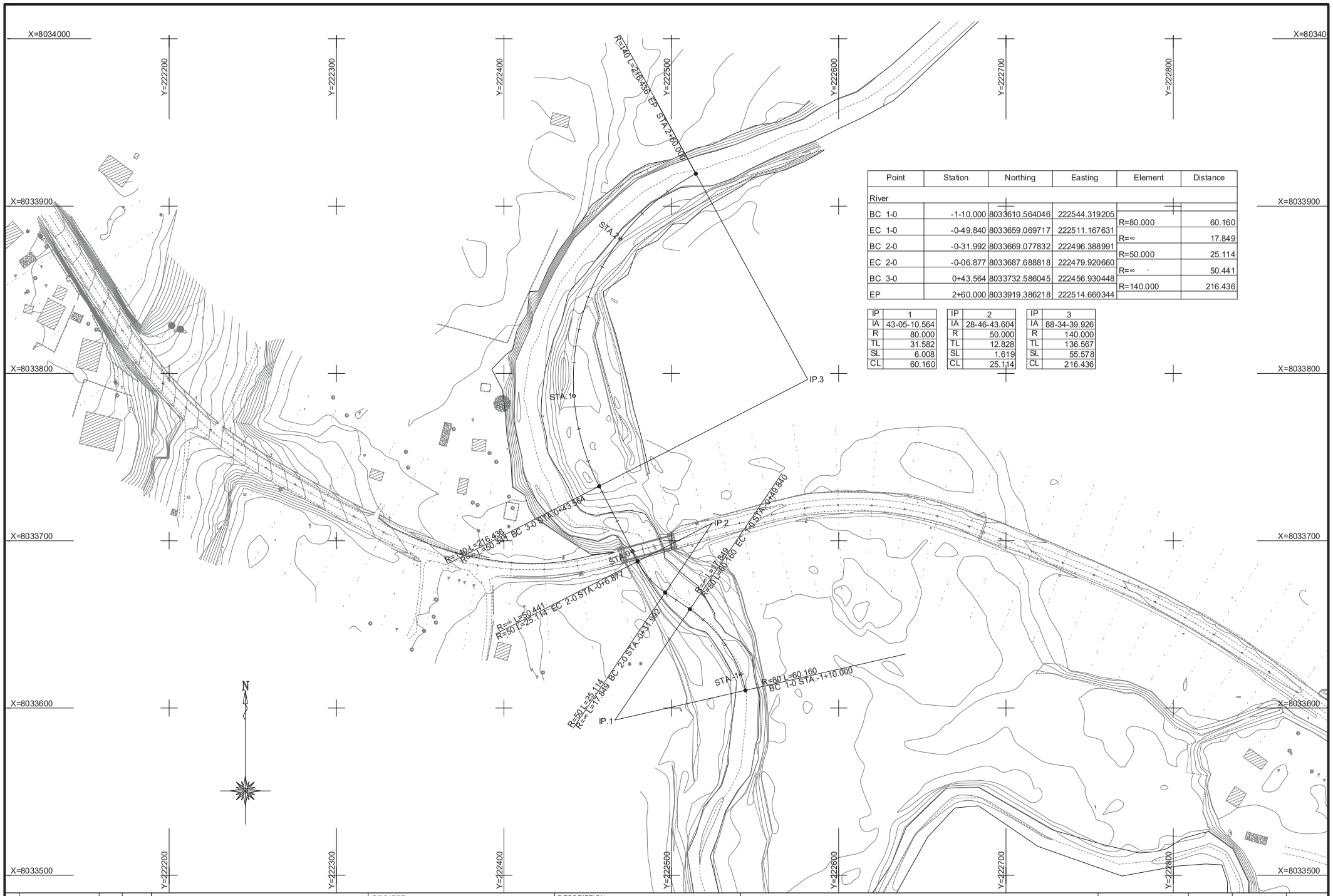

Point	Station	Northing	Easting	Element	Distance
River					
BC 1-0	-1-10.000	8033610.564046	222544.319205		
				R=80.000	60.160
EC 1-0	-0-49.840	8033659.069717	222511.167631		
				R=∞	17.849
BC 2-0	-0-31.992	8033669.077832	222496.388991		
				R=50.000	25.114
EC 2-0	-0-06.877	8033687.688818	222479.920660		
				R=∞	50.441
BC 3-0	0+43.564	8033732.586045	222456.930448		
				R=140.000	216.436
EP	2+60.000	8033919.386218	222514.660344		

IP	1
IA	43-05-10.564
R	80.000
TL	31.582
SL	6.008
CL	60.160

IP	2
IA	28-46-43.604
R	50.000
TL	12.828
SL	1.619
CL	25.114

IP	3
IA	88-34-39.926
R	140.000
TL	136.567
SL	55.578
CL	216.436

REV	DESCRIPTION	BY	DATE

REPUBLIC OF VANUATU
PUBLIC WORKS DEPARTMENT
MINISTRY OF INFRASTRUCTURE AND PUBLIC UTILITIES

PROJECT:
PREPARATORY SURVEY ON THE PROJECT FOR THE DISASTER RECONSTRUCTION OF TEOUMA BRIDGE IN REPUBLIC OF VANUATU

DESCRIPTION:
RIVER ALIGNMENT

CONSULTANTS REFERENCE
CTI ENGINEERING INTERNATIONAL CO., LTD.
KOKUSAI KOGYO CO., LTD.

DRAWN	CHECKED	APPROVED	P.W.D REFERENCE CHECKED	P.W.D REFERENCE APPROVED

SCALE (A3 SIZE): 1:2000
DRAWING NO.: 3
SHEET NO.:

RCC Reinforced Concrete Crib

Wet Stone Pitching (1)
RCC (3)
TYPE-B
RCC (6)
TYPE-B
RCC (1)
TYPE-A
RCC (10)
TYPE-B
RCC (7)
TYPE-B
Wet Stone Pitching (3)
RCC (8)
TYPE-B
RCC (2)
TYPE-A
Limestone Gravel (t=200)
Wet Stone Pitching (4)
RCC (9)
TYPE-B
RCC (4)
TYPE-B
Wet Stone Pitching (2)
RCC (5)
TYPE-B
Limestone Gravel (t=200)
N
5.0m
1:1.5
1:2.0
1:1.5
1:1.5
1:1.5

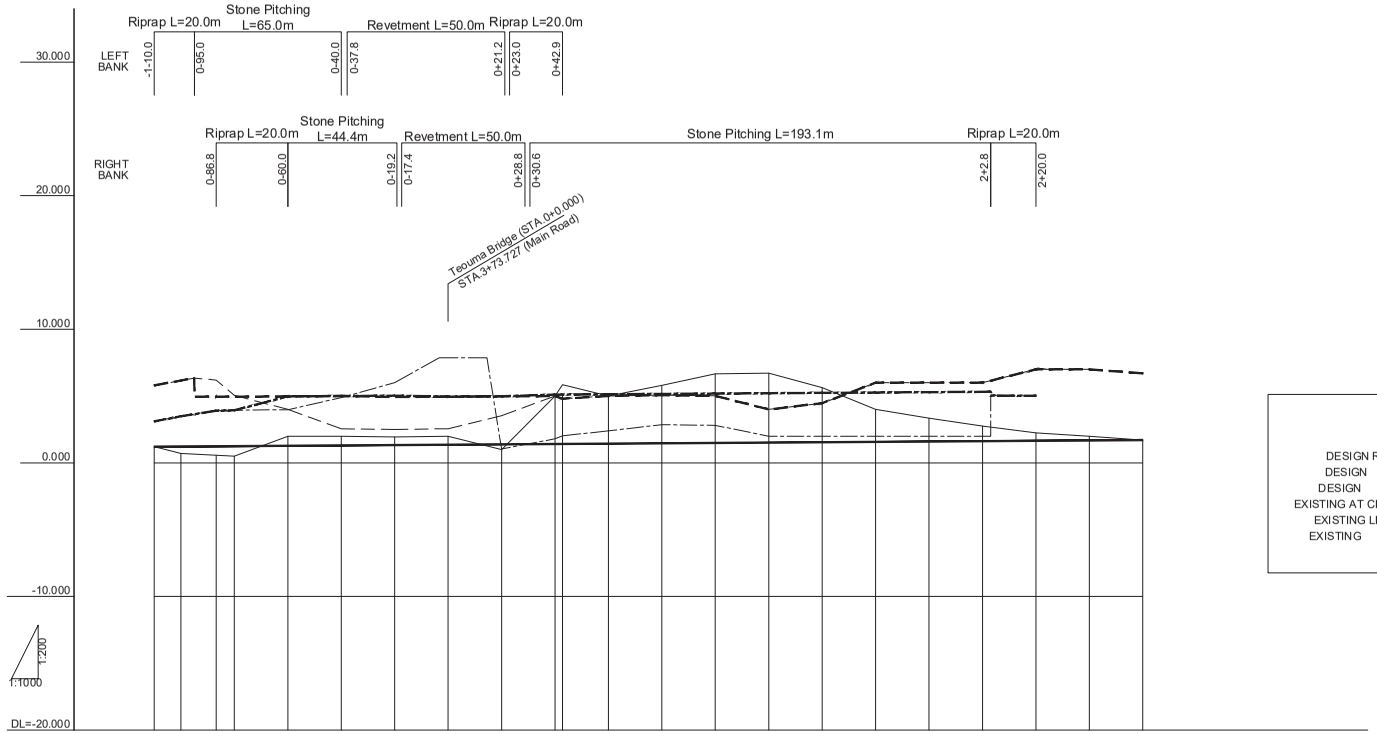

LEGEND

- DESIGN RIVERBED
- DESIGN
- DESIGN
- EXISTING AT CENTERLINE
- EXISTING LEFT
- EXISTING

DESIGN RIVERBED SLOPE		1.213	I=1/760 L=370.000																			1.700
DESIGN ELEVATION	LEFT BANK (EL.m)	5.800	6.167	4.953	4.953	4.979	5.005	4.932	4.958	4.984	5.000 4.803	5.013	5.065	5.052	4.000	4.473	6.000	6.000	6.000	7.000	7.000	6.700
	RIGHT BANK (EL.m)	3.114	3.487	3.903	3.940	4.979	5.005	5.032	4.958	4.984	5.111 5.114	5.137	5.163	5.189	5.216	5.242	5.268	5.295	5.321	5.019		
	RIVERBED (EL.m)	1.213	1.226	1.244	1.253	1.279	1.305	1.332	1.358	1.384	1.411 1.414	1.437	1.463	1.489	1.516	1.542	1.568	1.595	1.621	1.647	1.674	1.700
EXISTING ELEVATION	LEFT BANK (EL.m)	5.80	6.17	6.20	5.05	4.00	2.55	2.50	2.56	3.54	5.00 4.80	5.01	5.07	5.05	4.00	4.47	6.00	6.00	6.00	7.00	7.00	6.70
	RIGHT BANK (EL.m)	3.11	3.49	3.90	3.94	3.98	4.89	6.00	7.87	1.05	1.80 2.03	2.40	2.86	2.81	2.00	2.00	2.00	2.00	2.00	5.02		
	CENTERLINE (EL.m)	1.21	0.70	0.40	0.50	2.00	2.00	1.94	2.00	1.00	5.00 5.85	5.00	5.81	6.66	6.71	5.63	4.00	3.35	2.76	2.25	2.00	1.70
DISTANCE	ACCUMULATED	-110.000	-100.000	-86.796	-80.000	-60.000	-40.000	-20.000	0.000	20.000	40.000 42.854	60.000	80.000	100.000	120.000	140.000	160.000	180.000	200.000	220.000	240.000	260.000
	PARTIAL	-10.000	-13.204	-6.796	-20.000	-20.000	-20.000	-20.000	0.000	20.000	20.000 2.854	17.146	20.000	20.000	20.000	20.000	20.000	20.000	20.000	20.000	20.000	20.000
STATION NO.		-1-10.000	-1-0.000	0-86.796	0-80.000	0-60.000	0-40.000	0-20.000	0+0.000	0+20.000	0+40.000 0+42.854	0+60.000	0+80.000	1+0.000	1+20.000	1+40.000	1+60.000	1+80.000	2+0.000	2+20.000	2+40.000	2+60.000

REV	DESCRIPTION	BY	DATE

REPUBLIC OF VANUATU
PUBLIC WORKS DEPARTMENT
MINISTRY OF INFRASTRUCTURE AND PUBLIC UTILITIES

PROJECT: PREPARATORY SURVEY ON THE PROJECT FOR THE DISASTER RECONSTRUCTION OF TEOUMA BRIDGE IN REPUBLIC OF VANUATU

DESCRIPTION: PROFILE (REVETMENT)

CONSULTANTS REFERENCE: CTI ENGINEERING INTERNATIONAL CO., LTD. / KOKUSAI KOGYO CO., LTD.

DRAWN	CHECKED	APPROVED	P.W.D REFERENCE CHECKED	P.W.D REFERENCE APPROVED	SCALE (A3 SIZE)	DRAWING NO.	SHEET NO.
					V=1:400 H=1:2,000	05	

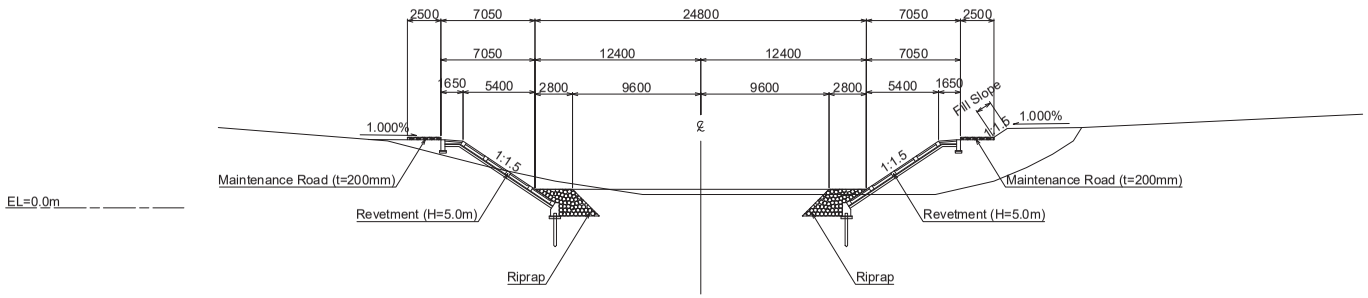

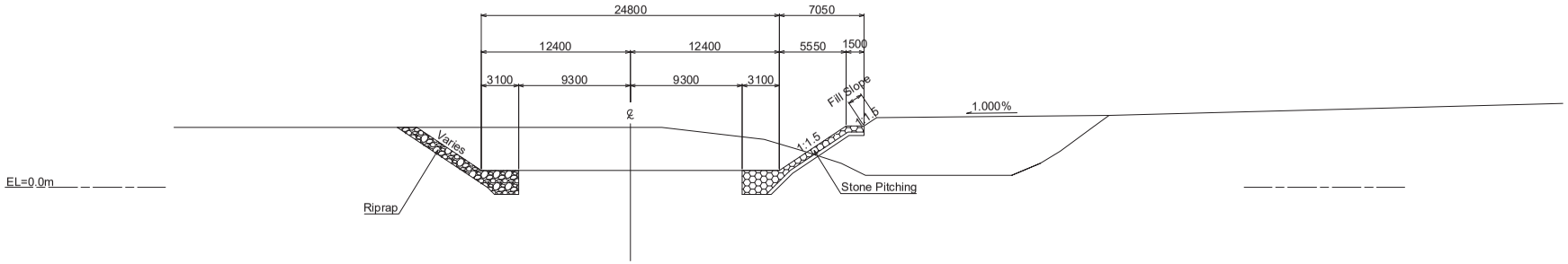

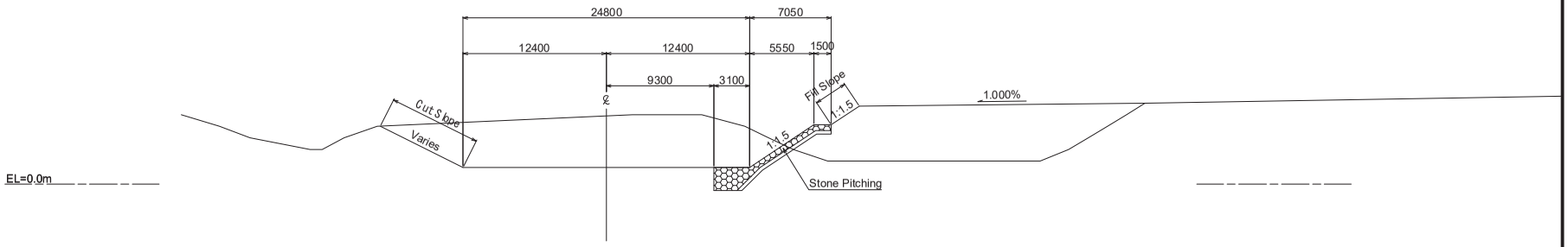

REV	DESCRIPTION	BY	DATE

REPUBLIC OF VANUATU
PUBLIC WORKS DEPARTMENT
MINISTRY OF INFRASTRUCTURE AND PUBLIC UTILITIES

PROJECT:
PREPARATORY SURVEY ON THE PROJECT FOR THE DISASTER RECONSTRUCTION OF TEOUMA BRIDGE IN REPUBLIC OF VANUATU

DESCRIPTION:
TYPICAL CROSS SECTION (REVETMENT)

CONSULTANTS REFERENCE	DRAWN	CHECKED	APPROVED	P.W.D REFERENCE CHECKED	P.W.D REFERENCE APPROVED	SCALE (A3 SIZE)	DRAWING NO.	SHEET NO.
CTI ENGINEERING INTERNATIONAL CO., LTD. KOKUSAI KOGYO CO., LTD.						1:400	6	

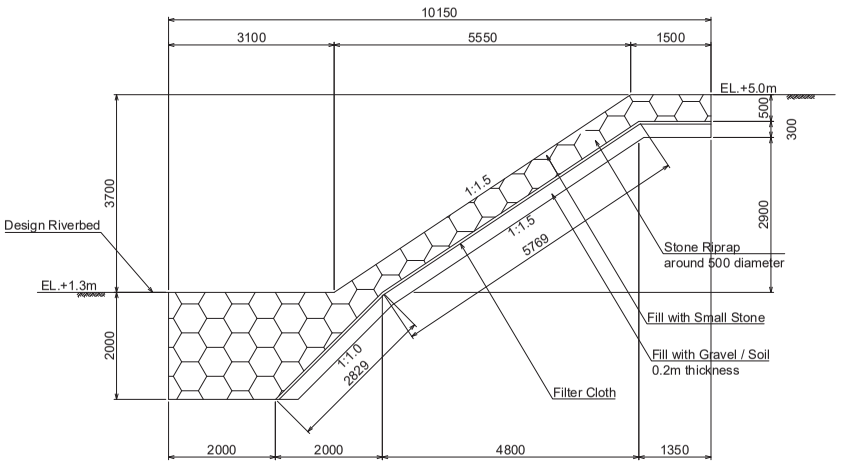

Detail of Stone Pitching S=1:100

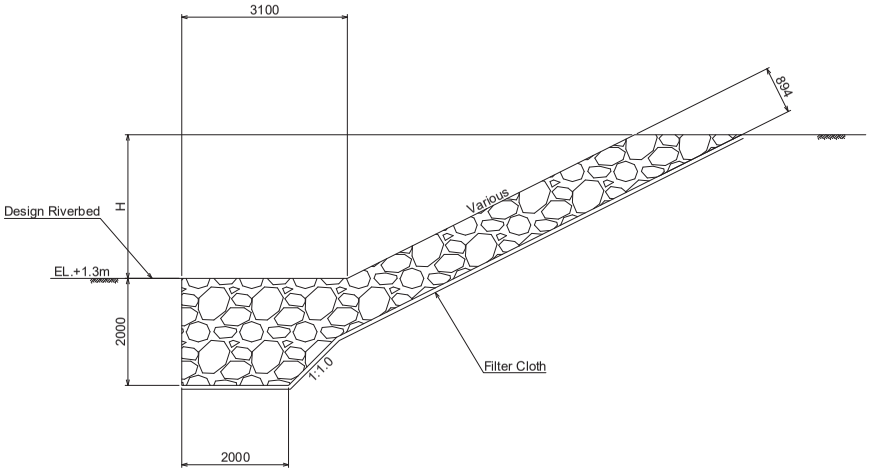

Detail of Riprap S=1:100

REV	DESCRIPTION	BY	DATE

REPUBLIC OF VANUATU
PUBLIC WORKS DEPARTMENT
MINISTRY OF INFRASTRUCTURE AND PUBLIC UTILITIES

PROJECT:
PREPARATORY SURVEY ON THE PROJECT FOR THE DISASTER RECONSTRUCTION OF TEOUMA BRIDGE IN REPUBLIC OF VANUATU

DESCRIPTION:
RIPRAP / STONE PITCHING

CONSULTANTS REFERENCE	DRAWN	CHECKED	APPROVED	P.W.D REFERENCE CHECKED	P.W.D REFERENCE APPROVED	SCALE (A3 SIZE)	DRAWING NO.	SHEET NO.
CTI ENGINEERING INTERNATIONAL CO., LTD. KOKUSAI KOGYO CO., LTD.						AS SHOWN	7	

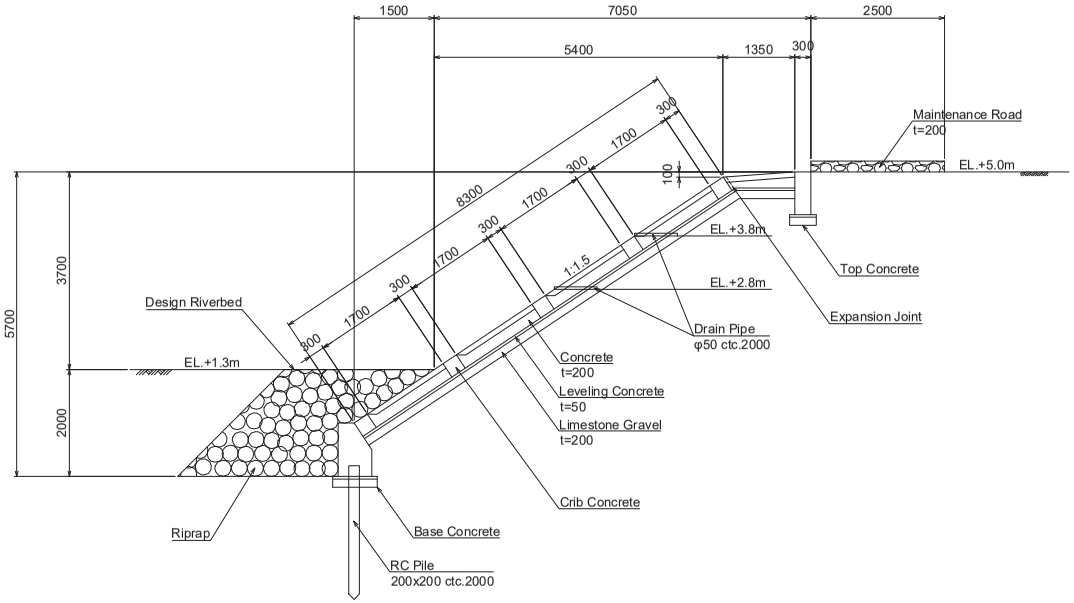

Side View S=1:100

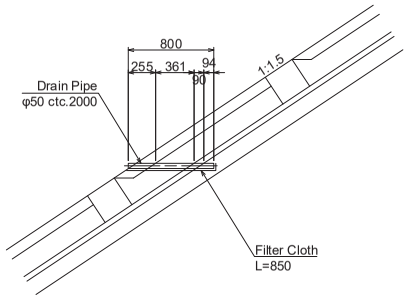

Detail of Drain Pipe S=1:50

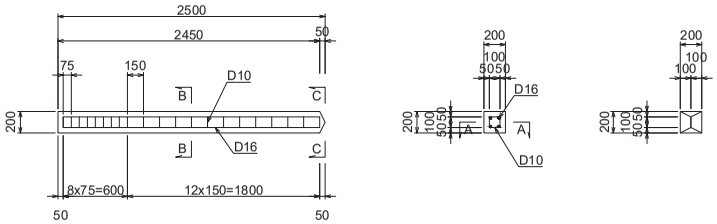

Section A - A Section B - B Section C - C

Detail of RC Pile S=1:50

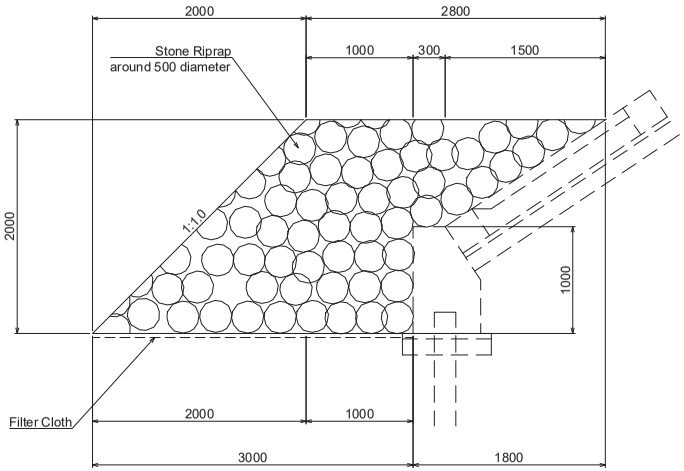

Detail of Riprap S=1:50

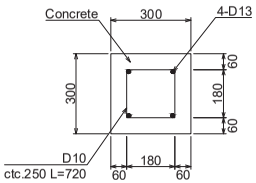

Detail of Crib Concrete S=1:20

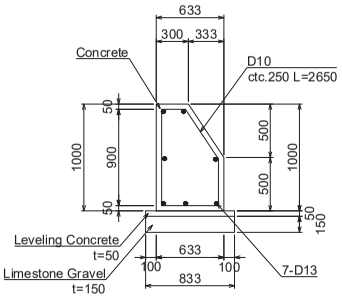

Detail of Base Concrete S=1:50

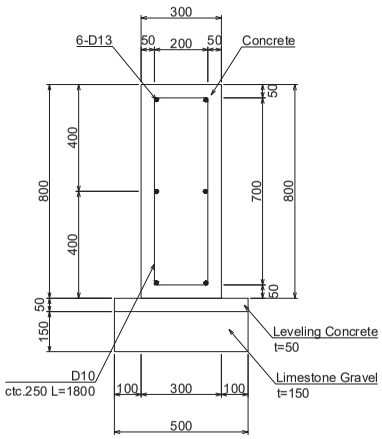

Detail of Top Concrete S=1:20

REV	DESCRIPTION	BY	DATE

REPUBLIC OF VANUATU
PUBLIC WORKS DEPARTMENT
MINISTRY OF INFRASTRUCTURE AND PUBLIC UTILITIES

PROJECT: PREPARATORY SURVEY ON THE PROJECT FOR THE DISASTER RECONSTRUCTION OF TEOUMA BRIDGE IN REPUBLIC OF VANUATU

DESCRIPTION: REVETMENT(1)

CONSULTANTS REFERENCE	DRAWN	CHECKED	APPROVED	P.W.D REFERENCE CHECKED	P.W.D REFERENCE APPROVED	SCALE (A3 SIZE)	DRAWING NO.	SHEET NO.
CTI ENGINEERING INTERNATIONAL CO., LTD. KOKUSAI KOGYO CO., LTD.						AS SHOWN	8	

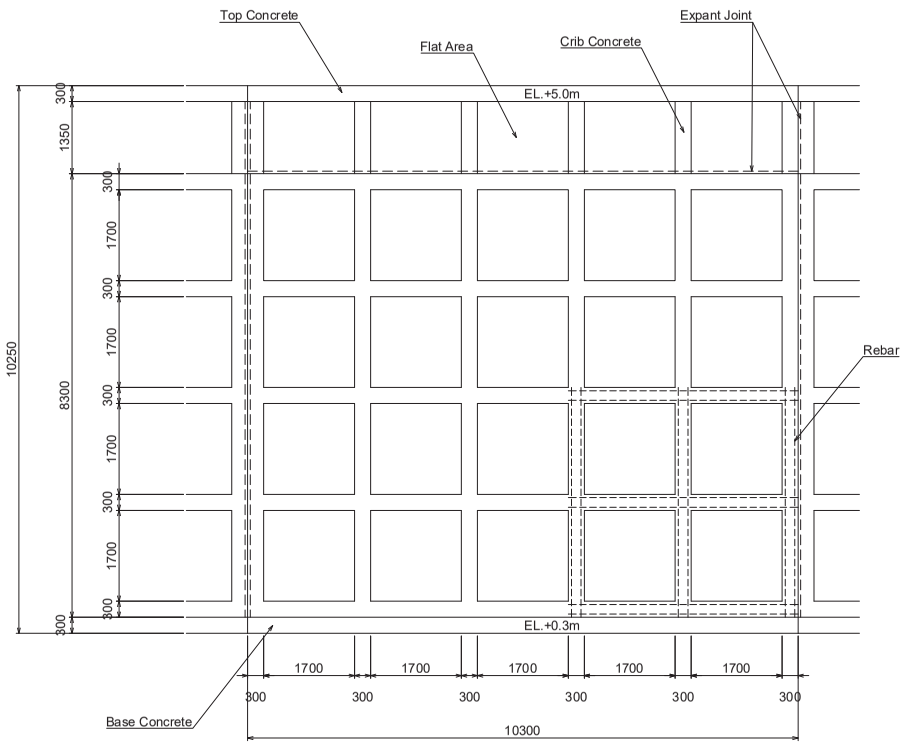

Plan S=1:100

REV	DESCRIPTION	BY	DATE

REPUBLIC OF VANUATU
PUBLIC WORKS DEPARTMENT
MINISTRY OF INFRASTRUCTURE AND PUBLIC UTILITIES

PROJECT:
PREPARATORY SURVEY ON THE PROJECT FOR THE DISASTER RECONSTRUCTION OF TEOUMA BRIDGE IN REPUBLIC OF VANUATU

DESCRIPTION:
REVETMENT(2)

CONSULTANTS REFERENCE	DRAWN	CHECKED	APPROVED	P.W.D REFERENCE CHECKED	P.W.D REFERENCE APPROVED	SCALE (A3 SIZE)	DRAWING NO.	SHEET NO.
CTI ENGINEERING INTERNATIONAL CO., LTD. KOKUSAI KOGYO CO., LTD.						AS SHOWN	9	

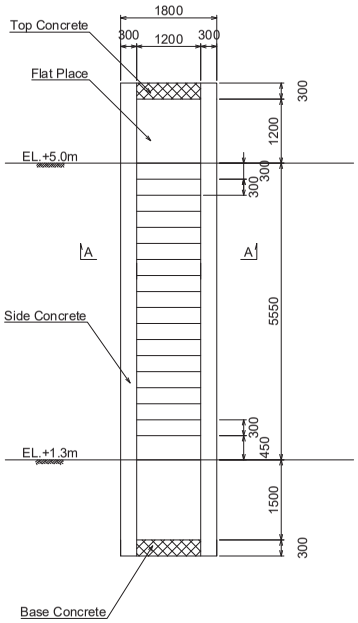

Plan S=1:100

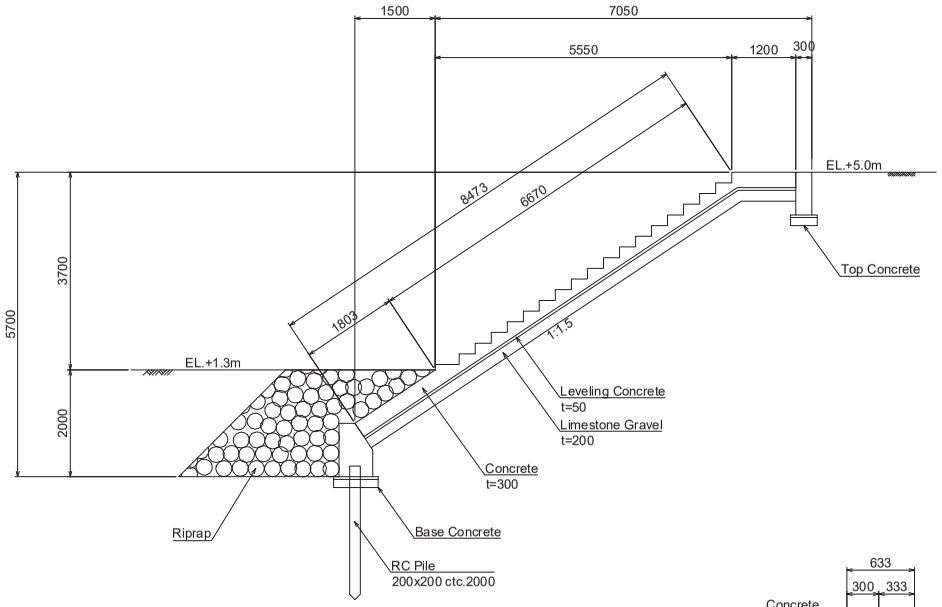

Side View S=1:100

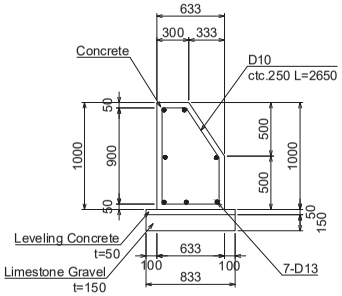

Detail of Base Concrete S=1:50

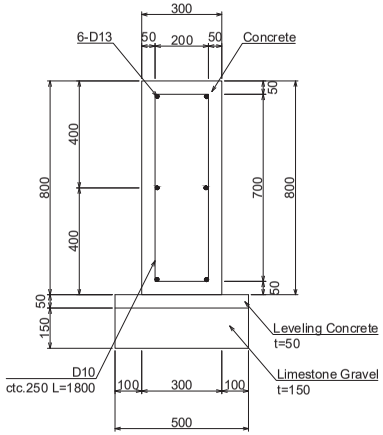

Detail of Top Concrete S=1:20

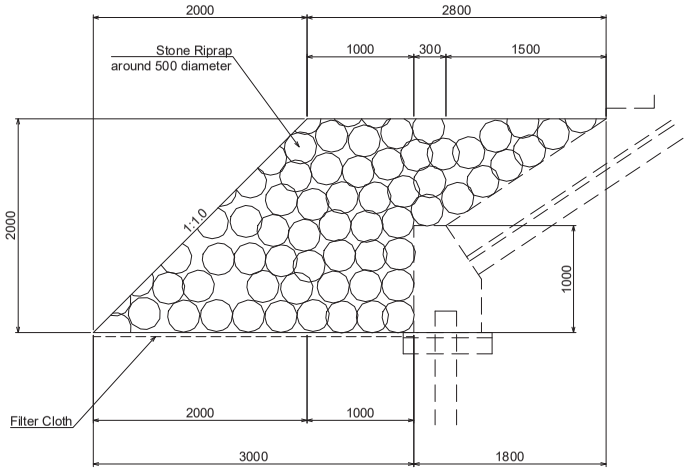

Detail of Riprap S=1:50

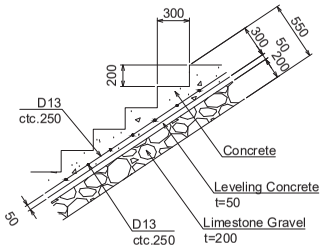

Detail of Steps S=1:50

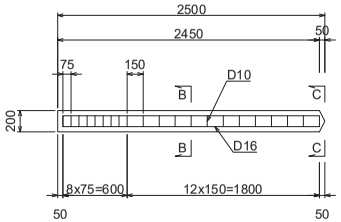

Section A - A

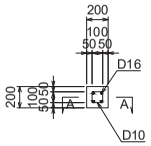

Section B - B

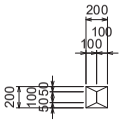

Section C - C

Detail of RC Pile S=1:50

REV	DESCRIPTION	BY	DATE

REPUBLIC OF VANUATU
PUBLIC WORKS DEPARTMENT
MINISTRY OF INFRASTRUCTURE AND PUBLIC UTILITIES

PROJECT: PREPARATORY SURVEY ON THE PROJECT FOR THE DISASTER RECONSTRUCTION OF TEOUMA BRIDGE IN REPUBLIC OF VANUATU

DESCRIPTION: APPROACH STEPS(1)

CONSULTANTS REFERENCE: CTI ENGINEERING INTERNATIONAL CO., LTD. / KOKUSAI KOGYO CO., LTD.

DRAWN	CHECKED	APPROVED	P.W.D REFERENCE CHECKED	P.W.D REFERENCE APPROVED	SCALE (A3 SIZE)	DRAWING NO.	SHEET NO.
					AS SHOWN	10	

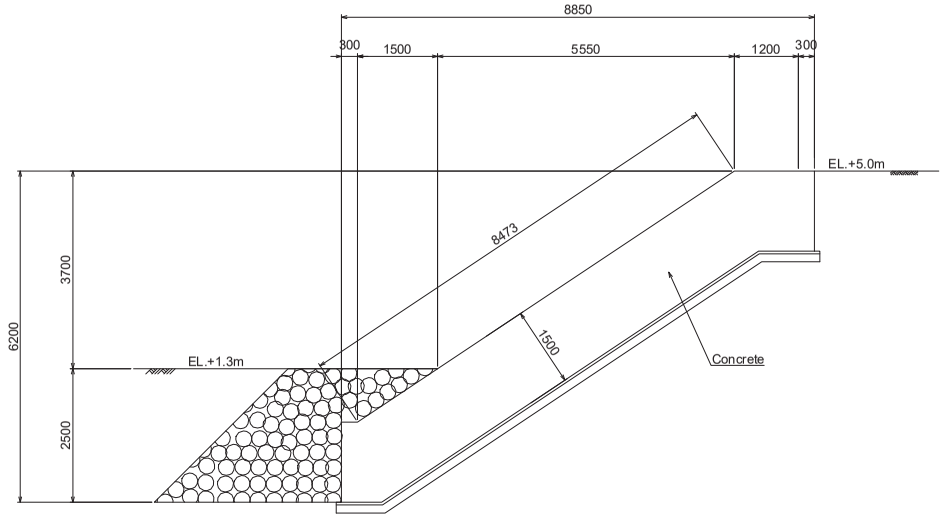

Side View (Side Concrete) S=1:100

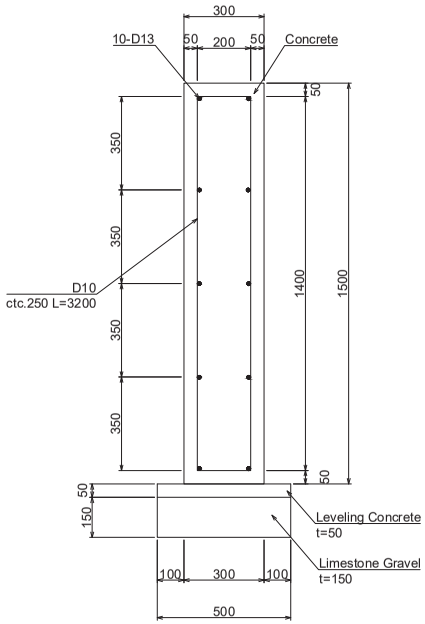

Detail of Side Concrete S=1:20

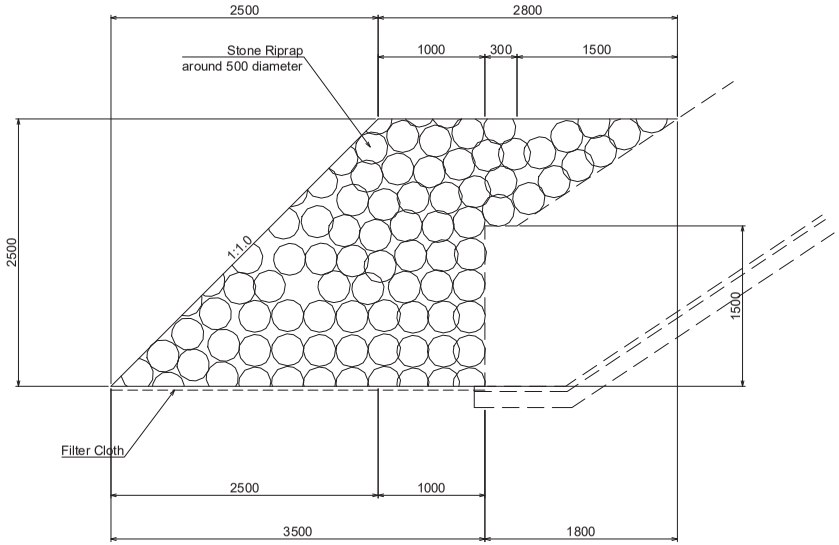

Detail of Riprap (Side Concrete) S=1:50

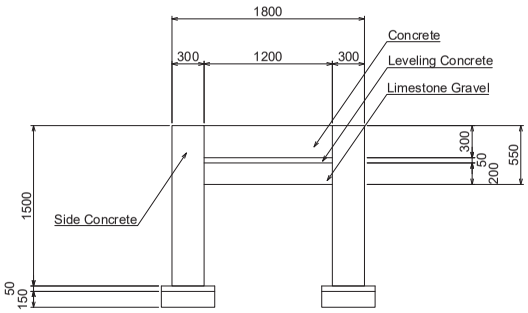

Section A-A S=1:50

REV	DESCRIPTION	BY	DATE

REPUBLIC OF VANUATU
PUBLIC WORKS DEPARTMENT
MINISTRY OF INFRASTRUCTURE AND PUBLIC UTILITIES

PROJECT: PREPARATORY SURVEY ON THE PROJECT FOR THE DISASTER RECONSTRUCTION OF TEOUMA BRIDGE IN REPUBLIC OF VANUATU

DESCRIPTION: APPROACH STEPS(2)

CONSULTANTS REFERENCE	DRAWN	CHECKED	APPROVED	P.W.D REFERENCE CHECKED	P.W.D REFERENCE APPROVED	SCALE (A3 SIZE)	DRAWING NO.	SHEET NO.
CTI ENGINEERING INTERNATIONAL CO., LTD. KOKUSAI KOGYO CO., LTD.						AS SHOWN	11	

GENERAL VIEW OF TEOUMA BRIDGE

ELEVATION S=1 : 200

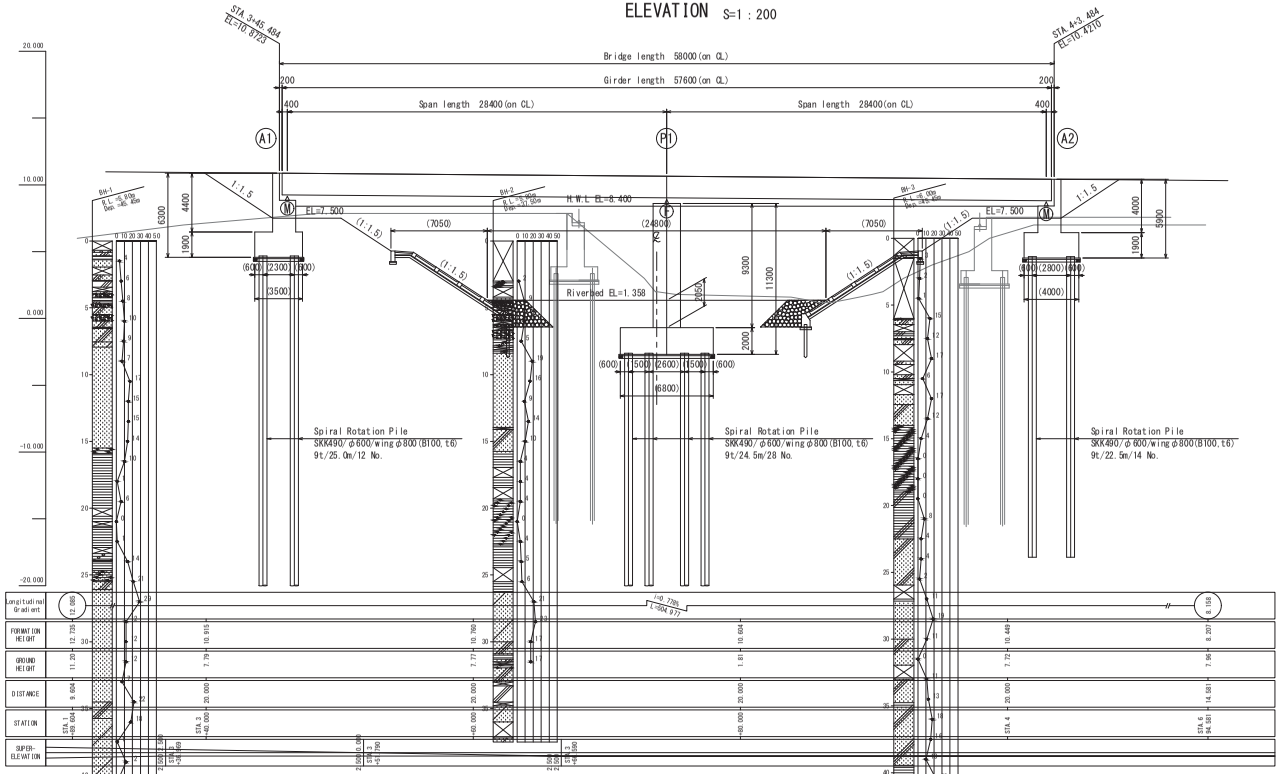

PLAN S=1 : 200

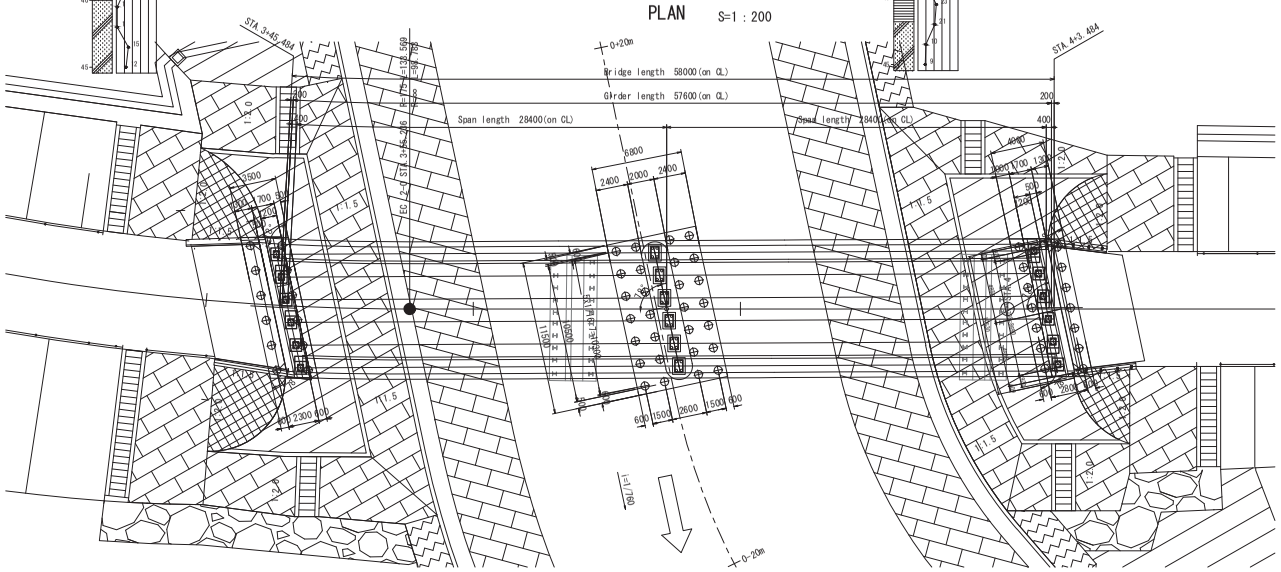

TYPICAL SECTION S=1:50

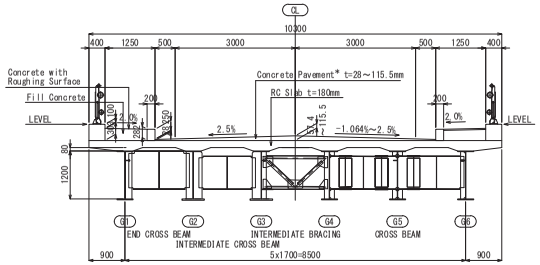

* Concrete for pavement shall be casted at the same time of deck concrete

Design Conditions

Bridge Length		58.000m
Girder Length		57.600m
Span Length		28.400m+28.400m
Width	Full Width	10.300m
	Effective Width	9.500m
Skew		A1=105° 11′ 35″ ,P1,A2=102° 00′ 00″
Curve Radius		R=175~R=∞
Longitudinal Gradient		0.778%
Superelevation		2.5% -1.064% ~ 2.5% 2.5%
Live Load		A Live Load-TL
Pavement		Concrete Pavement t=20~155mm
Seismic Coefficient		kh=0.3
Structural Type	Superstructure	2 Span Continuous Steel Plate Girder
	Substructure	T-Conversely Abutment(A1,A2), Wall type Pier(P1)
	Pile	Spiral Rotation Pile (NS ECO SPIRAL φ600)
Material for Superstructure	Steel	SS400,SM400,SM490Y,S10T (Japan Industrial Standards)
	Concrete	σck= 24N/mm2
	Re-Bar	SD345 (Japan Industrial Standards)
Material for Substructure	Concrete	σck= 24N/mm2
	Re-Bar	SD345 (Japan Industrial Standards)
	Pile	SKK490 (Japan Industrial Standards)
Bridge Grade		Grade A
Soil Type		Type III
Specification		Specifications for Highway Bridges I~V (2012)

AP6-12

REV	DESCRIPTION	BY	DATE

REPUBLIC OF VANUATU
PUBLIC WORKS DEPARTMENT
MINISTRY OF INFRASTRUCTURE AND PUBLIC UTILITIES

PROJECT:
PREPARATORY SURVEY ON THE PROJECT FOR THE DISASTER RECONSTRUCTION OF TEOUMA BRIDGE IN REPUBLIC OF VANUATU

DESCRIPTION:

CONSULTANTS REFERENCE
CTI ENGINEERING INTERNATIONAL CO., LTD.
KOKUSAI KOGYO CO., LTD.

DRAWN	CHECKED	APPROVED	P.W.D REFERENCE CHECKED	P.W.D REFERENCE APPROVED	SCALE	DRAWING NO.	SHEET NO.
					(A3 SIZE)	12	

General View of Superstructure S=1:150

Elevation

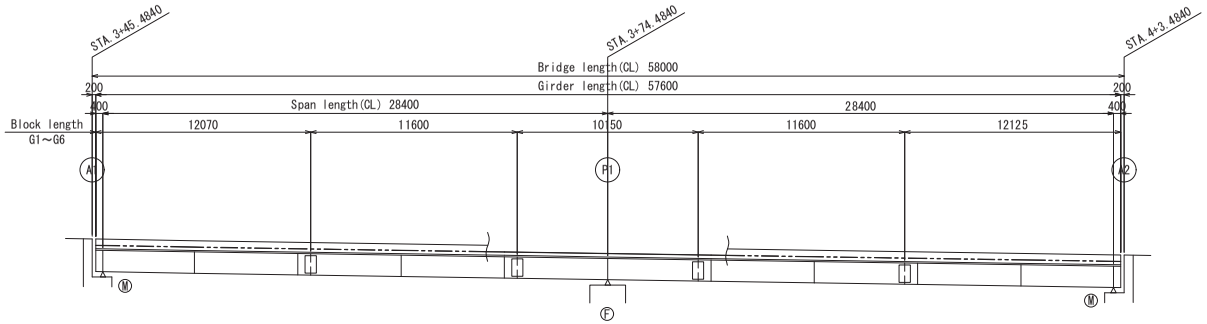

Typical Cross Section S=1:50

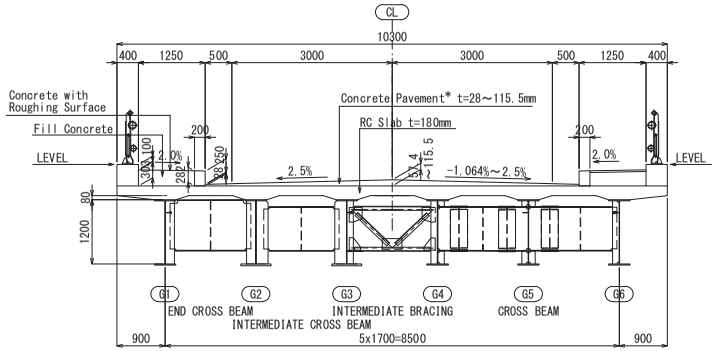

* Concrete for pavement shall be casted at the same time of deck concrete

Plane

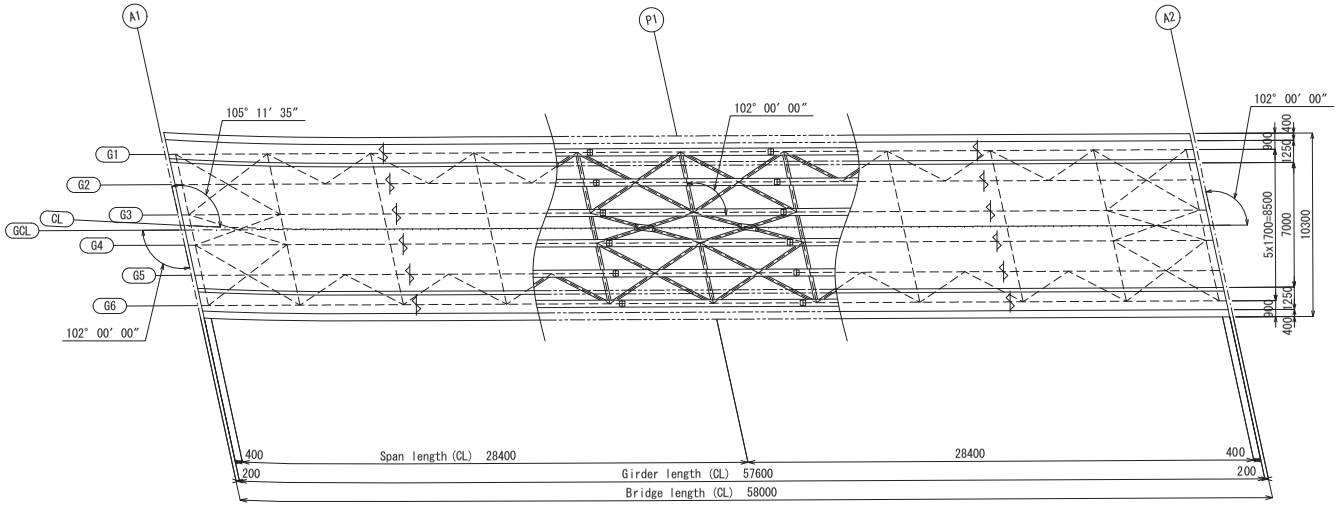

DESIGN CONDITIONS

Live Load		A Live Load-TL
Bridge Type		2 Span Continuous Steel Plate Girder
Bridge Length		58.000m
Girder Length		57.600m
Span Length		28.400m+28.400m
Width	Full Width	10.300m
	Effective Width	7.000m
Skew		A1=105° 11′ 35″,P1,A2=102° 00′ 00″
Curve Radius		R=175～R=∞
Longitudinal Gradient		0.778%
Superelevation		2.5% -1.064% ～ 2.5% 2.5%
Slab		RC Slab t=180mm
Pavement		Concrete Pavement t=28～115.5mm
Seismic Coefficient		kh=0.3(Level-1)
Material	Steel	SS400,SM400,SM490Y,S10T
	Concrete	σck=24N/mm2
	Re-Bar	SD345
Specification		Specifications for Highway Bridges I～V (2012)

REV	DESCRIPTION	BY	DATE

REPUBLIC OF VANUATU
PUBLIC WORKS DEPARTMENT
MINISTRY OF INFRASTRUCTURE AND PUBLIC UTILITIES

PROJECT: PREPARATORY SURVEY ON THE PROJECT FOR THE DISASTER RECONSTRUCTION OF TEOUMA BRIDGE IN REPUBLIC OF VANUATU

DESCRIPTION: STRUCTURE GENERAL VIEW OF SUPERSTRUCTURES

CONSULTANTS REFERENCE: CTI ENGINEERING INTERNATIONAL CO., LTD. / KOKUSAI KOGYO CO., LTD.

DRAWN	CHECKED	APPROVED	P.W.D REFERENCE CHECKED	P.W.D REFERENCE APPROVED	SCALE (A3 SIZE)	DRAWING NO.	SHEET NO.
					1:150 1:50	13	

General View of A1 (1/2) S=1:100

(M)

Front View

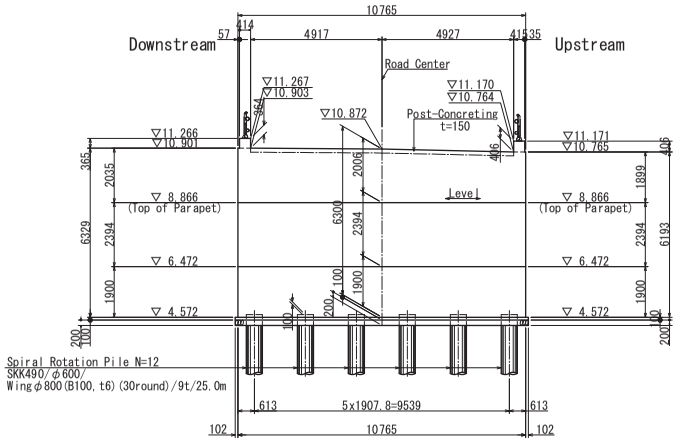

Back View

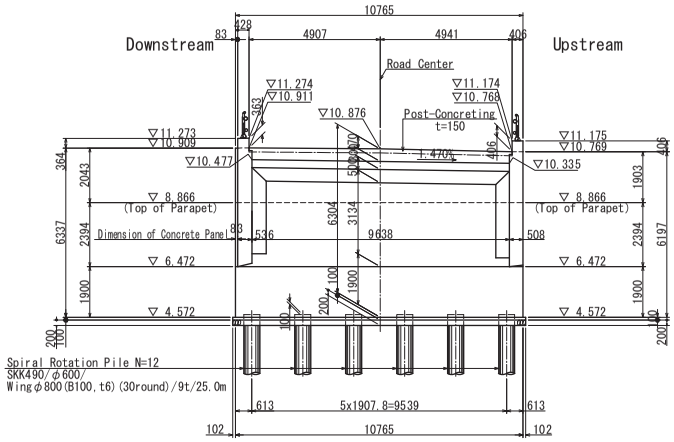

Side View (Road Center)

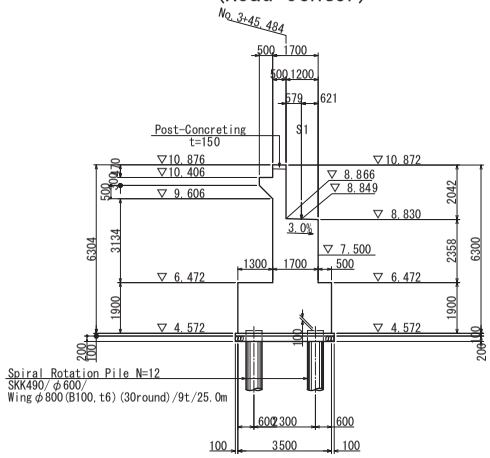

Plan of Shoe Position

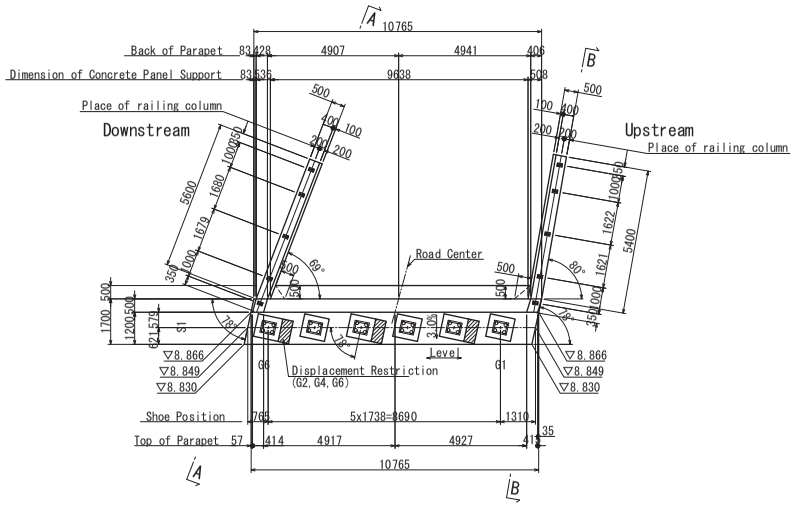

Plan of Pile Cap

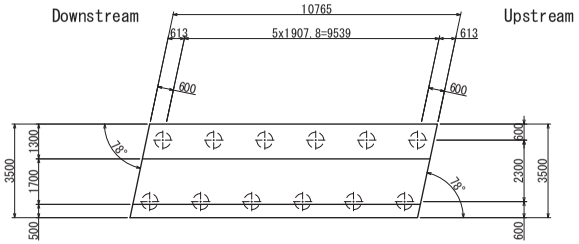

Table of Elevation

(Unit:m)

	A1(onS1)					
	G6	G5	G4	G3	G2	G1
Road Elevation	10.871	10.884	10.875	10.856	10.821	10.786
THK of Conc Surfacing	0.132	0.142	0.129	0.107	0.069	0.031
THK of Slab	0.180	0.180	0.180	0.180	0.180	0.180
Height of Haunch	0.080	0.080	0.080	0.080	0.080	0.080
Elev. of top of FLG.	10.479	10.482	10.486	10.489	10.492	10.495
Girder height	1.200	1.200	1.200	1.200	1.200	1.200
THK of Low FLG.	0.028	0.015	0.013	0.013	0.015	0.028
THK of Sole Plate	0.026	0.026	0.026	0.026	0.026	0.026
Height of Shoe	0.166	0.166	0.166	0.166	0.166	0.166
Shoe Elevation	9.059	9.075	9.081	9.084	9.085	9.075
Height of Mortar	0.030	0.030	0.030	0.030	0.030	0.030
Height of Shoe Bed	0.180	0.196	0.202	0.205	0.206	0.196
Elevation of Bridge Seat	8.849	8.849	8.849	8.849	8.849	8.849
Superelevation	Level					

Design Conditions

Title	Specification
Superstructure	2 Span Continuous Non Composite Steel Girder
Substructure	T-Conversely Abutment
Shoe Type	Mov
Specified Concrete Strength	24 N/mm²
Re-Bar Grade	SD 345 (Japan Industrial Standards)
Splice Length	31.25φ
Max.Re-Bar Length	12m
Pile Type	Spiral Rotation Pile (NS Eco Spiral Pile) φ600

REV	DESCRIPTION	BY	DATE

REPUBLIC OF VANUATU
PUBLIC WORKS DEPARTMENT
MINISTRY OF INFRASTRUCTURE AND PUBLIC UTILITIES

PROJECT: PREPARATORY SURVEY ON THE PROJECT FOR THE DISASTER RECONSTRUCTION OF TEOUMA BRIDGE IN REPUBLIC OF VANUATU

DESCRIPTION:

CONSULTANTS REFERENCE: CTI ENGINEERING INTERNATIONAL CO., LTD. / KOKUSAI KOGYO CO., LTD.

DRAWN	CHECKED	APPROVED	P.W.D REFERENCE CHECKED	P.W.D REFERENCE APPROVED	SCALE (A3 SIZE)	DRAWING NO.	SHEET NO.
						14	

General View of A1 (2/2) S=1:100

(M)

Wing Wall (Downstream)
A – A

Note)( ) shows inside dimension.

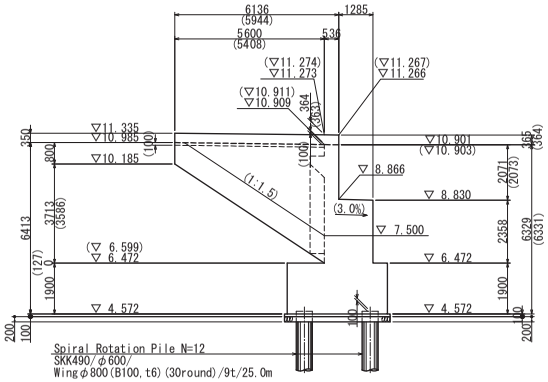

Wing Wall (Upstream)
B – B

Note)( ) shows inside dimension.

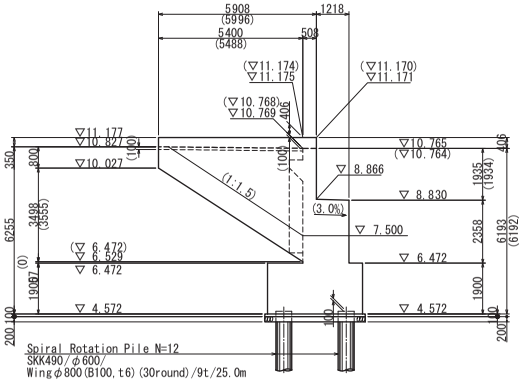

Railing Detail S=1:10

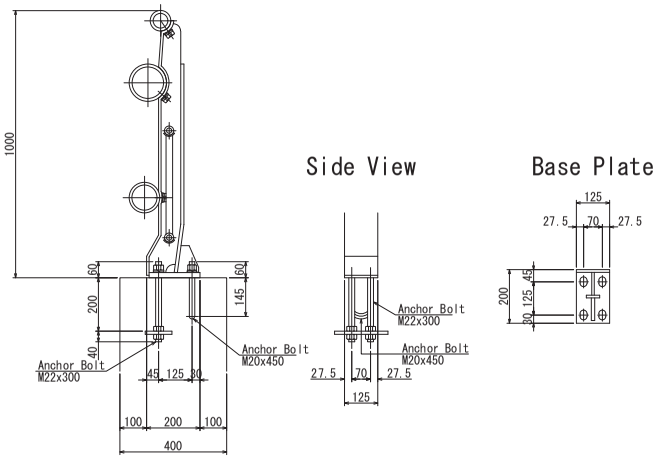

Shoe Bed Detail S=1:20

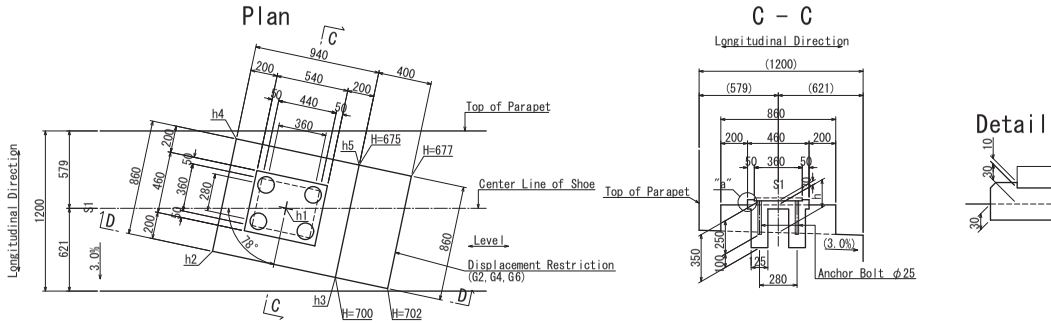

Plan of Approach Slab
(t=400)

Note) Elev. of Road Surface FH / Elev. of Arroach Slab Surface EL t=Thickness of Pavement

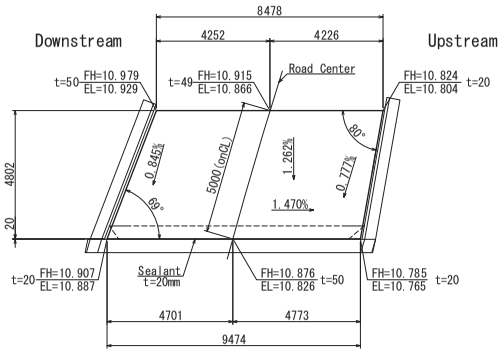

Support Detail S=1:20

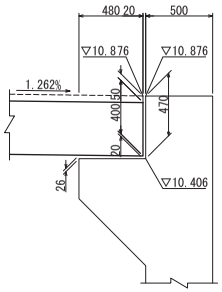

D – D
Transverse Direction

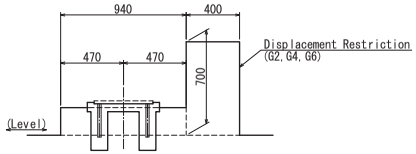

Height of Shoe Bed

	G6	G5	G4	G3	G2	G1
h1	180	196	202	205	206	196
h2	190	206	212	215	216	206
h3	196	212	218	221	222	212
h4	164	180	186	189	190	180
h5	170	186	192	195	196	186

REV	DESCRIPTION	BY	DATE

REPUBLIC OF VANUATU
PUBLIC WORKS DEPARTMENT
MINISTRY OF INFRASTRUCTURE AND PUBLIC UTILITIES

PROJECT: PREPARATORY SURVEY ON THE PROJECT FOR THE DISASTER RECONSTRUCTION OF TEOUMA BRIDGE IN REPUBLIC OF VANUATU

DESCRIPTION:

CONSULTANTS REFERENCE: CTI ENGINEERING INTERNATIONAL CO., LTD. / KOKUSAI KOGYO CO., LTD.

DRAWN	CHECKED	APPROVED	P.W.D REFERENCE CHECKED	P.W.D REFERENCE APPROVED	SCALE	DRAWING NO.	SHEET NO.
					(A3 SIZE)	15	

General View of P1 S=1:100
(F)

Front View

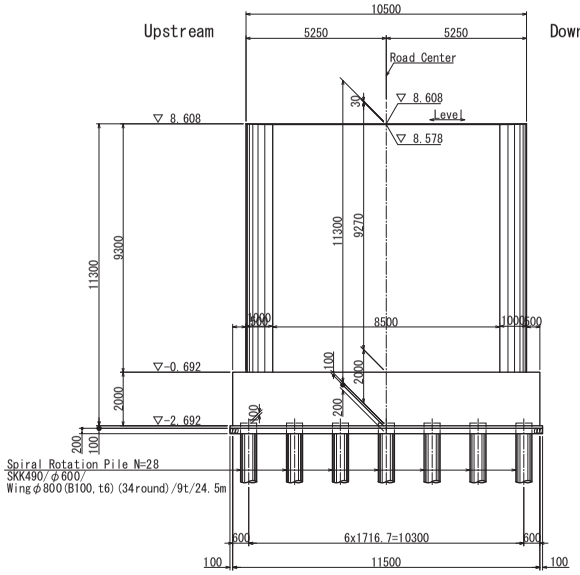

Side View (Road Center)

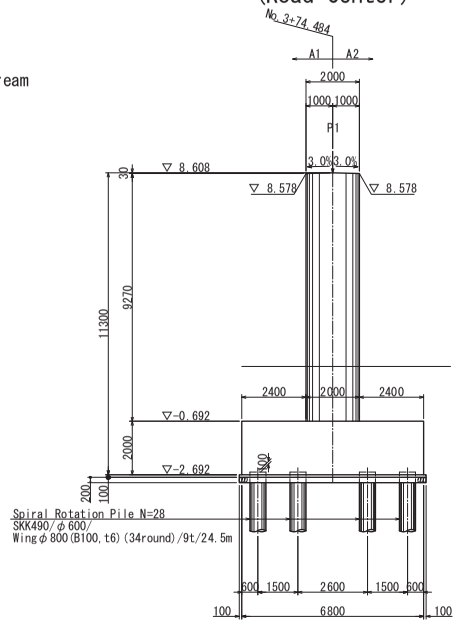

Shoe Bed Detail S=1:20

Plan

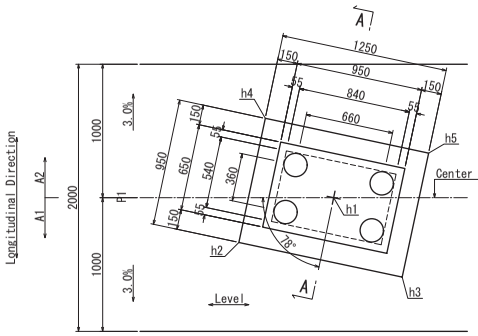

A - A

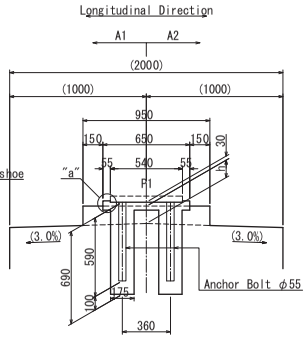

Detail "a" S=1:5

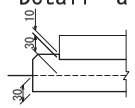

Height of Shoe Bed

	G1	G2	G3	G4	G5	G6
h1	123	130	127	124	122	110
h2	133	140	137	134	132	120
h3	141	148	145	142	140	128
h4	141	148	145	142	140	128
h5	133	140	137	134	132	120

Table of Elevation

(Unit:m)

	P1					
	G1	G2	G3	G4	G5	G6
Road Elevation	10.556	10.592	10.629	10.626	10.585	10.543
THK of Conc Surfacing	0.023	0.061	0.101	0.101	0.062	0.023
THK of Slab	0.180	0.180	0.180	0.180	0.180	0.180
Height of Haunch	0.080	0.080	0.080	0.080	0.080	0.080
Elev. of top of FLG.	10.273	10.271	10.268	10.265	10.263	10.260
Girder height	1.200	1.200	1.200	1.200	1.200	1.200
THK of Low FLG.	0.039	0.030	0.030	0.030	0.030	0.039
THK of Sole Plate	0.026	0.026	0.026	0.026	0.026	0.026
Height of Shoe	0.247	0.247	0.247	0.247	0.247	0.247
Shoe Elevation	8.761	8.768	8.765	8.762	8.760	8.748
Height of Mortar	0.030	0.030	0.030	0.030	0.030	0.030
Height of Shoe Bed	0.123	0.130	0.127	0.124	0.122	0.110
Elevation of Bridge Seat	8.608	8.608	8.608	8.608	8.608	8.608
Superelevation	Level					

Plan of Shoe Position

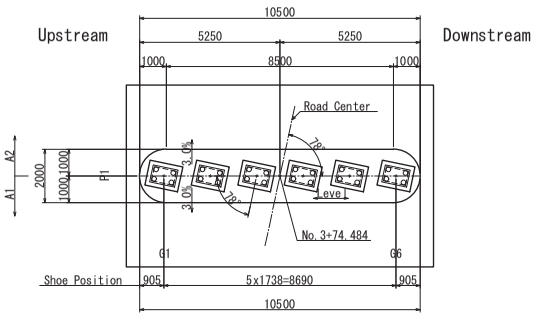

Plan of Pile Cap

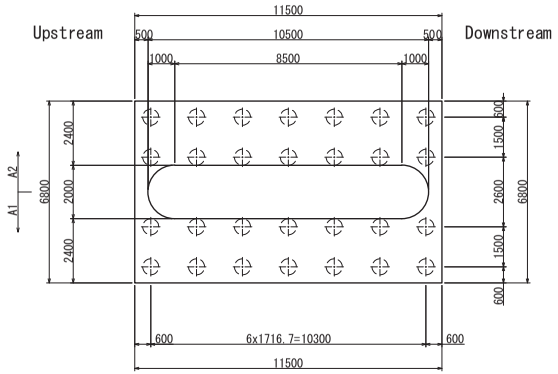

Design Conditions

Title	Specification
Superstructure	2 Span Continuous Non Composite Steel Girder
Substructure	Wall Type Pier
Shoe Type	Fix
Specified Concrete Strength	24 N/mm²
Re-Bar Grade	SD 345 (Japan Industrial Standards)
Splice Length	31.25φ
Max.Re-Bar Length	12m
Pile Type	Spiral Rotation Pile (NS Eco Spiral Pile) φ600

REV	DESCRIPTION	BY	DATE

REPUBLIC OF VANUATU
PUBLIC WORKS DEPARTMENT
MINISTRY OF INFRASTRUCTURE AND PUBLIC UTILITIES

PROJECT:
PREPARATORY SURVEY ON THE PROJECT FOR THE DISASTER RECONSTRUCTION OF TEOUMA BRIDGE IN REPUBLIC OF VANUATU

DESCRIPTION:

CONSULTANTS REFERENCE
CTI ENGINEERING INTERNATIONAL CO., LTD.
KOKUSAI KOGYO CO., LTD.

DRAWN	CHECKED	APPROVED	P.W.D REFERENCE CHECKED	P.W.D REFERENCE APPROVED	SCALE	DRAWING NO.	SHEET NO.
					(A3 SIZE)	16	

General View of A2 (1/2) S=1:100

(M)

Front View

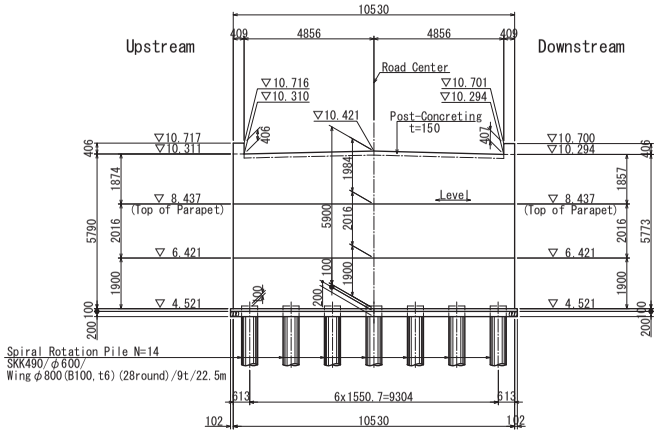

Back View

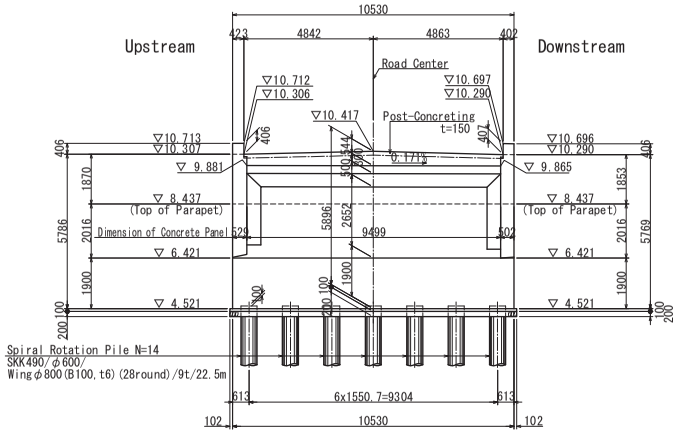

Side View (Road Center)

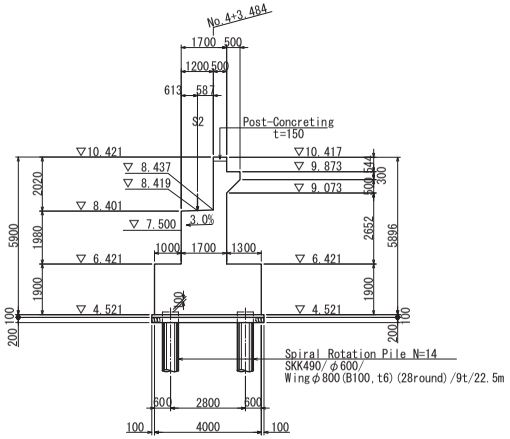

Plan of Shoe Position

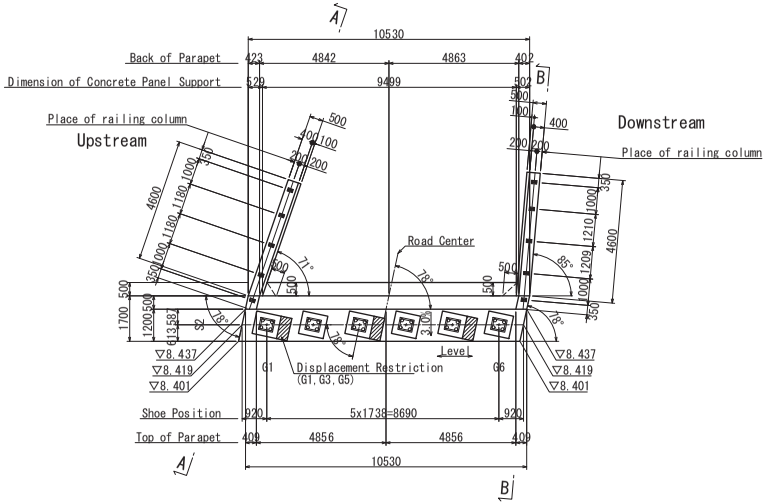

Plan of Pile Cap

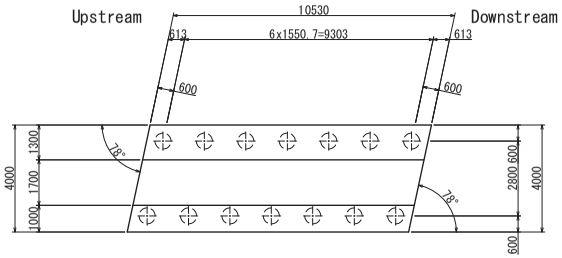

Table of Elevation

(Unit:m)

	A2(onS2)					
	G1	G2	G3	G4	G5	G6
Road Elevation	10.335	10.371	10.408	10.405	10.364	10.322
THK of Conc Surfacing	0.023	0.061	0.101	0.101	0.062	0.023
THK of Slab	0.180	0.180	0.180	0.180	0.180	0.180
Height of Haunch	0.080	0.080	0.080	0.080	0.080	0.080
Elev. of top of FLG.	10.052	10.050	10.047	10.044	10.042	10.039
Girder height	1.200	1.200	1.200	1.200	1.200	1.200
THK of Low FLG.	0.028	0.015	0.013	0.013	0.015	0.028
THK of Sole Plate	0.026	0.026	0.026	0.026	0.026	0.026
Height of Shoe	0.166	0.166	0.166	0.166	0.166	0.166
Shoe Elevation	8.632	8.643	8.642	8.639	8.635	8.619
Height of Mortar	0.030	0.030	0.030	0.030	0.030	0.030
Height of Shoe Bed	0.183	0.194	0.193	0.190	0.186	0.170
Elevation of Bridge Seat	8.419	8.419	8.419	8.419	8.419	8.419
Superelevation	Level					

Design Conditions

Title	Specification
Superstructure	2 Span Continuous Non Composite Steel Girder
Substructure	T-Conversely Abutment
Shoe Type	Mov
Specified Concrete Strength	24 N/mm²
Re-Bar Grade	SD 345 (Japan Industrial Standards)
Splice Length	31.25φ
Max.Re-Bar Length	12m
Pile Type	Spiral Rotation Pile (NS Eco Spiral Pile) φ600

AP6-17

REV	DESCRIPTION	BY	DATE

REPUBLIC OF VANUATU
PUBLIC WORKS DEPARTMENT
MINISTRY OF INFRASTRUCTURE AND PUBLIC UTILITIES

PROJECT: PREPARATORY SURVEY ON THE PROJECT FOR THE DISASTER RECONSTRUCTION OF TEOUMA BRIDGE IN REPUBLIC OF VANUATU

DESCRIPTION:

CONSULTANTS REFERENCE: CTI ENGINEERING INTERNATIONAL CO., LTD. / KOKUSAI KOGYO CO., LTD.

DRAWN	CHECKED	APPROVED	P.W.D REFERENCE CHECKED	P.W.D REFERENCE APPROVED	SCALE	DRAWING NO.	SHEET NO.
					(A3 SIZE)	17	

General View of A2 (2/2) S=1:100

(M)

Wing Wall (Upstream)
A – A

Note) ( ) shows inside dimension.

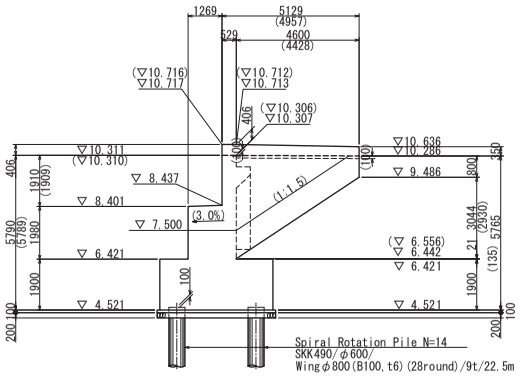

Wing Wall (Downstream)
B – B

Note) ( ) shows inside dimension.

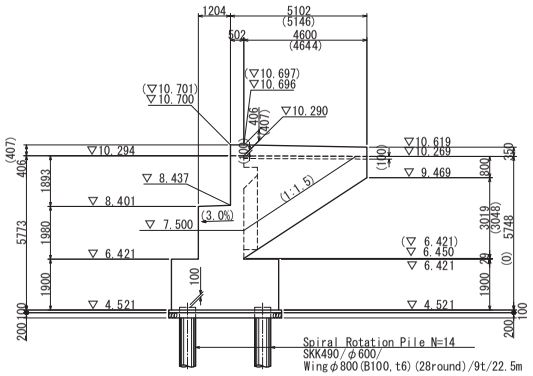

Railing Detail S=1:10

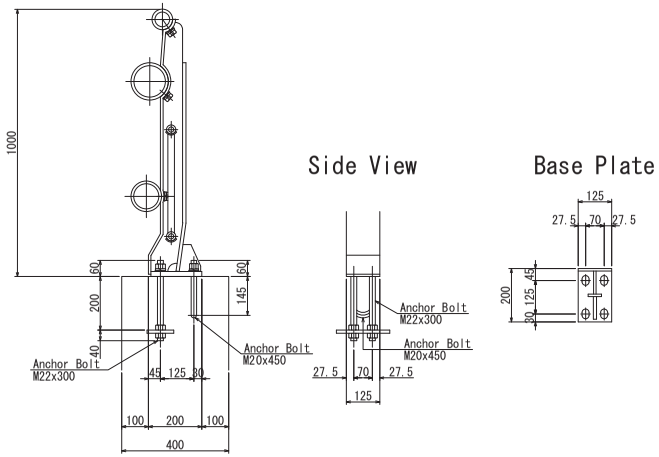

Plan of Approach Slab
(t=400)

Note) Elev. of Road Surface FH / Elev. of Arroach Slab Surface EL — t=Thickness of Pavement

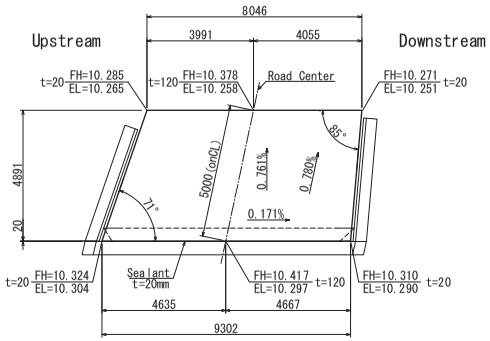

Support Detail S=1:20

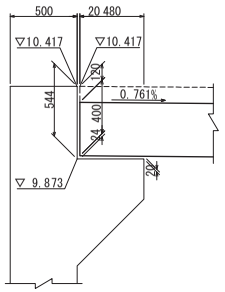

Shoe Bed Detail S=1:20

Plan

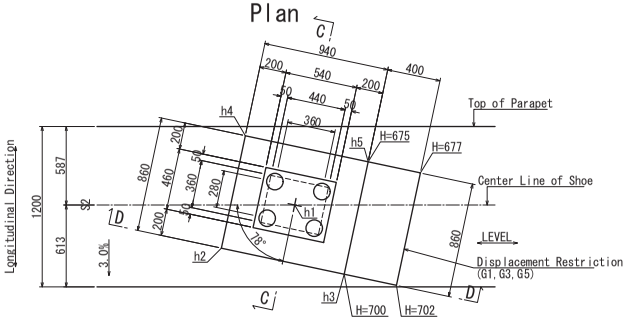

C – C

Longitudinal Direction

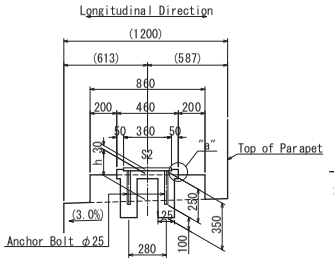

Detail "a"

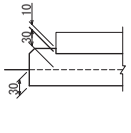

D – D

Transverse Direction

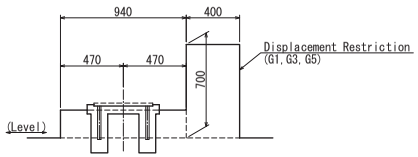

Height of Shoe Bed

	G1	G2	G3	G4	G5	G6
h1	183	194	193	190	186	170
h2	193	204	203	200	196	180
h3	199	210	209	206	202	186
h4	167	178	177	174	170	154
h5	173	184	183	180	176	160

REV	DESCRIPTION	BY	DATE

REPUBLIC OF VANUATU
PUBLIC WORKS DEPARTMENT
MINISTRY OF INFRASTRUCTURE AND PUBLIC UTILITIES

PROJECT: PREPARATORY SURVEY ON THE PROJECT FOR THE DISASTER RECONSTRUCTION OF TEOUMA BRIDGE IN REPUBLIC OF VANUATU

DESCRIPTION:

CONSULTANTS REFERENCE: CTI ENGINEERING INTERNATIONAL CO., LTD. / KOKUSAI KOGYO CO., LTD.

DRAWN	CHECKED	APPROVED	P.W.D REFERENCE CHECKED	P.W.D REFERENCE APPROVED	SCALE	DRAWING NO.	SHEET NO.
					(A3 SIZE)	18	

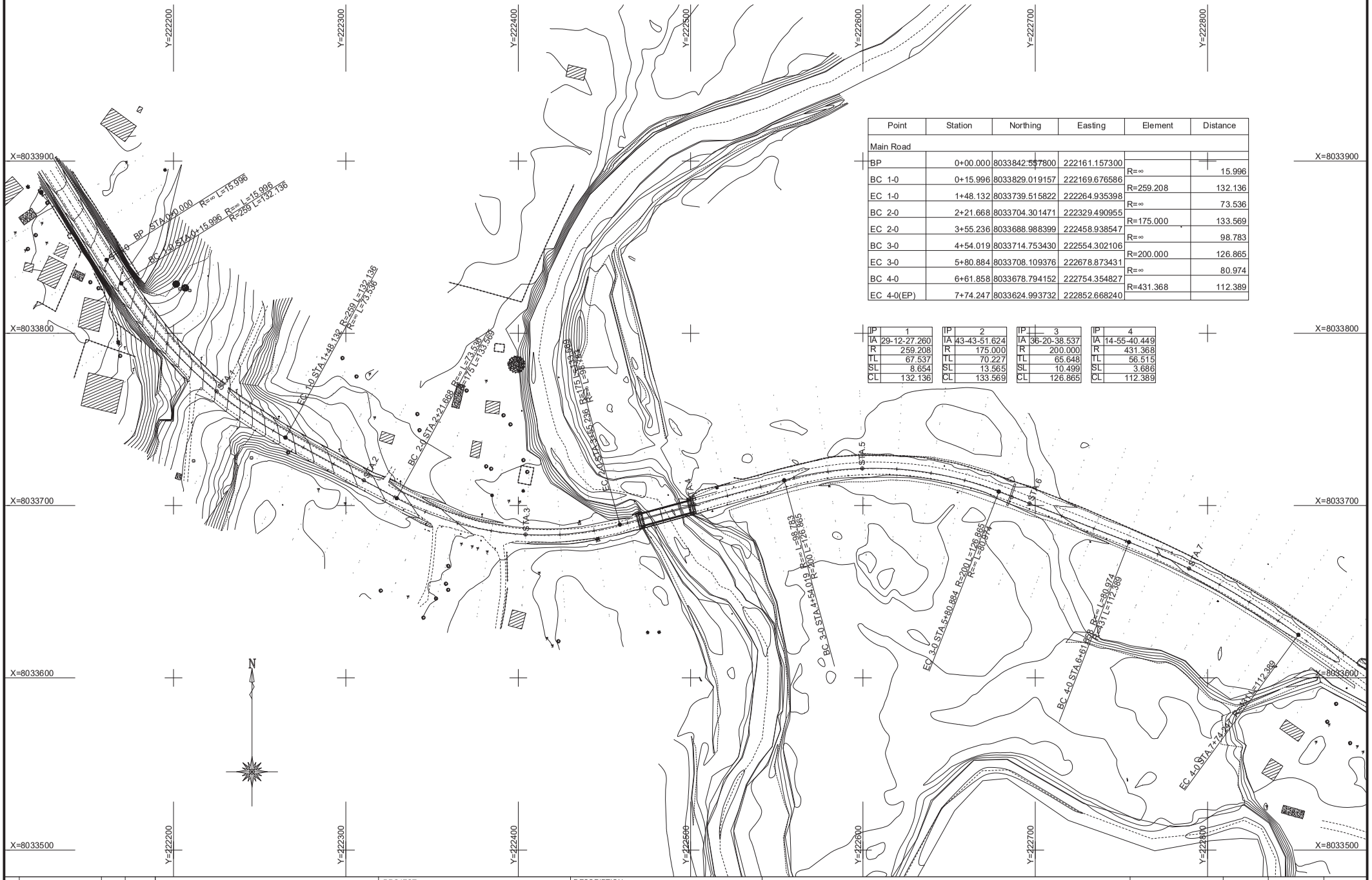

Point	Station	Northing	Easting	Element	Distance
Main Road					
BP	0+00.000	8033842.557800	222161.157300		
				R=∞	15.996
BC 1-0	0+15.996	8033829.019157	222169.676586		
				R=259.208	132.136
EC 1-0	1+48.132	8033739.515822	222264.935398		
				R=∞	73.536
BC 2-0	2+21.668	8033704.301471	222329.490955		
				R=175.000	133.569
EC 2-0	3+55.236	8033688.988399	222458.938547		
				R=∞	98.783
BC 3-0	4+54.019	8033714.753430	222554.302106		
				R=200.000	126.865
EC 3-0	5+80.884	8033708.109376	222678.873431		
				R=∞	80.974
BC 4-0	6+61.858	8033678.794152	222754.354827		
				R=431.368	112.389
EC 4-0(EP)	7+74.247	8033624.993732	222852.668240		

IP	1
IA	29-12-27.260
R	259.208
TL	67.537
SL	8.654
CL	132.136

IP	2
IA	43-43-51.624
R	175.000
TL	70.227
SL	13.565
CL	133.569

IP	3
IA	36-20-38.537
R	200.000
TL	65.648
SL	10.499
CL	126.865

IP	4
IA	14-55-40.449
R	431.368
TL	56.515
SL	3.686
CL	112.389

REV	DESCRIPTION	BY	DATE

REPUBLIC OF VANUATU
PUBLIC WORKS DEPARTMENT
MINISTRY OF INFRASTRUCTURE AND PUBLIC UTILITIES

PROJECT:
PREPARATORY SURVEY ON THE PROJECT FOR THE DISASTER RECONSTRUCTION OF TEOUMA BRIDGE IN REPUBLIC OF VANUATU

DESCRIPTION:
MAIN ROAD ALIGNMENT

CONSULTANTS REFERENCE
CTI ENGINEERING INTERNATIONAL CO., LTD.
KOKUSAI KOGYO CO., LTD.

DRAWN	CHECKED	APPROVED	P.W.D REFERENCE CHECKED	P.W.D REFERENCE APPROVED	SCALE (A3 SIZE)	DRAWING NO.	SHEET NO.
					1:2000	19	

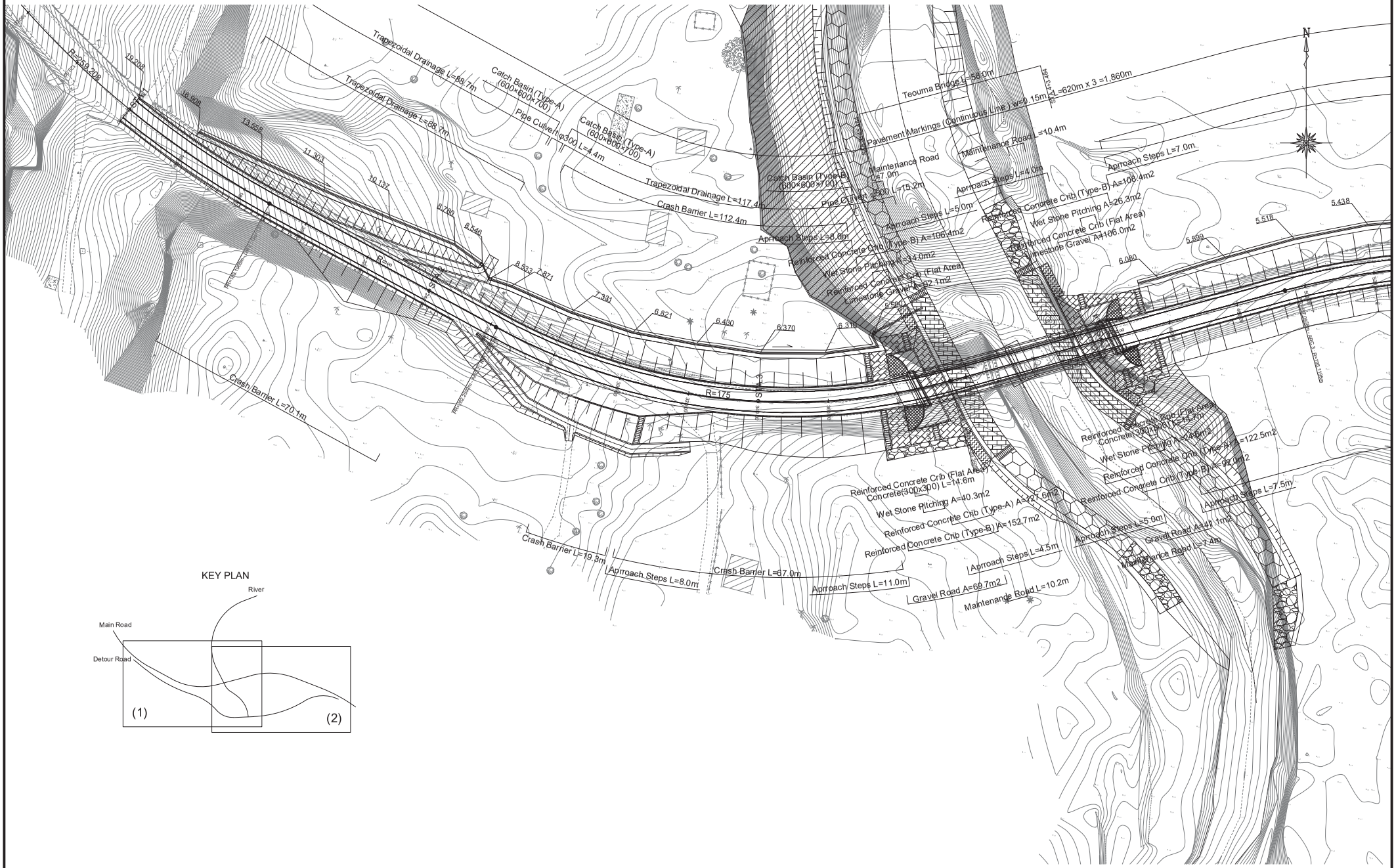

REV	DESCRIPTION	BY	DATE

REPUBLIC OF VANUATU
PUBLIC WORKS DEPARTMENT
MINISTRY OF INFRASTRUCTURE AND PUBLIC UTILITIES

PROJECT:
PREPARATORY SURVEY ON THE PROJECT FOR THE DISASTER RECONSTRUCTION OF TEOUMA BRIDGE IN REPUBLIC OF VANUATU

DESCRIPTION:
PLAN(1)
(MAIN ROAD)

CONSULTANTS REFERENCE				P.W.D REFERENCE		SCALE (A3 SIZE)	DRAWING NO.	SHEET NO.
CTI ENGINEERING INTERNATIONAL CO., LTD.	DRAWN	CHECKED	APPROVED	CHECKED	APPROVED	1:1000	20	
KOKUSAI KOGYO CO., LTD.								

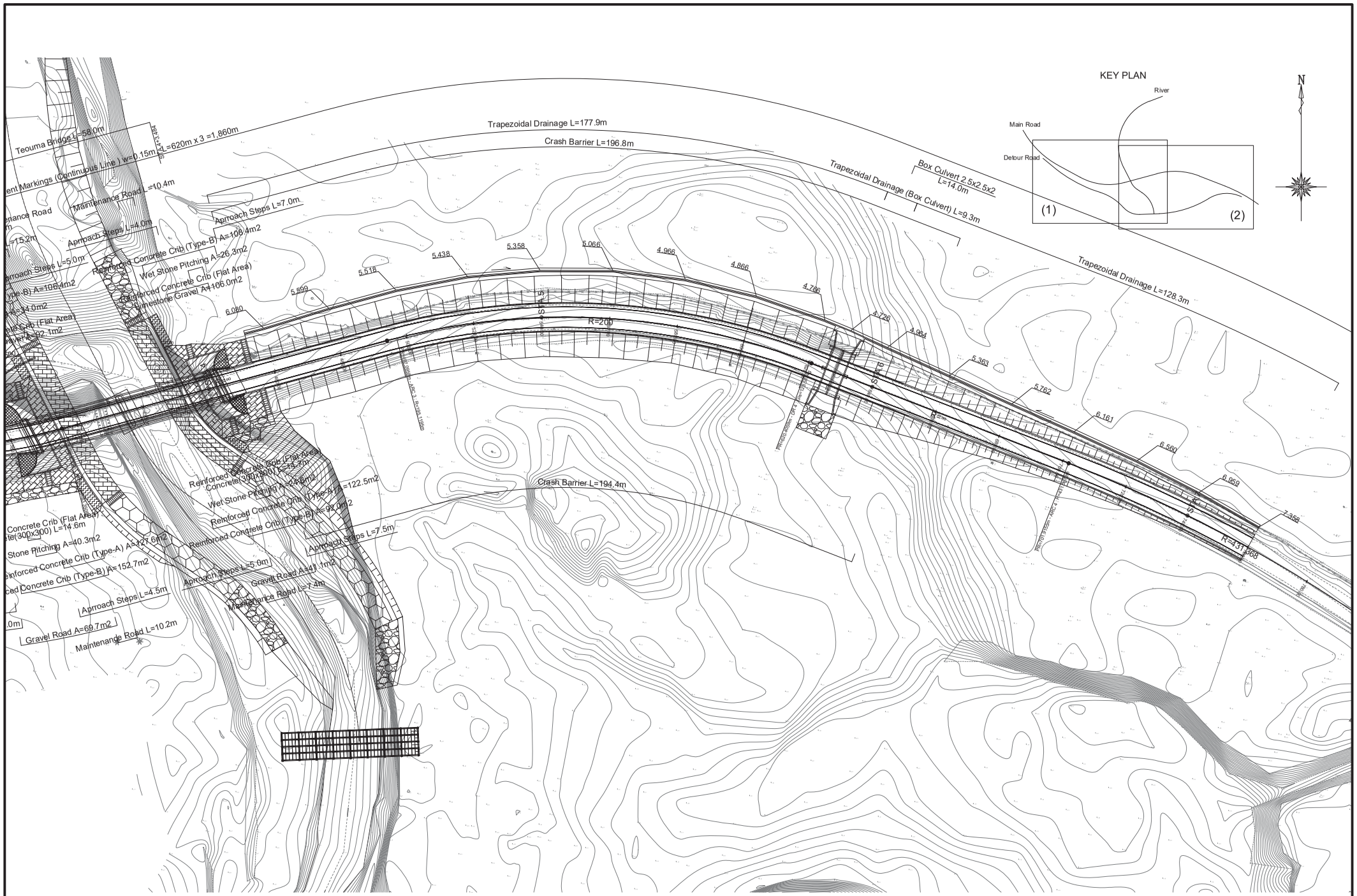

REV	DESCRIPTION	BY	DATE

REPUBLIC OF VANUATU
PUBLIC WORKS DEPARTMENT
MINISTRY OF INFRASTRUCTURE AND PUBLIC UTILITIES

PROJECT:
PREPARATORY SURVEY ON THE PROJECT FOR THE DISASTER RECONSTRUCTION OF TEOUMA BRIDGE IN REPUBLIC OF VANUATU

DESCRIPTION:
PLAN(2)
(MAIN ROAD)

CONSULTANTS REFERENCE				P.W.D REFERENCE		SCALE (A3 SIZE)	DRAWING NO.	SHEET NO.
CTI ENGINEERING INTERNATIONAL CO., LTD.	DRAWN	CHECKED	APPROVED	CHECKED	APPROVED	1:1000	21	
KOKUSAI KOGYO CO., LTD.								

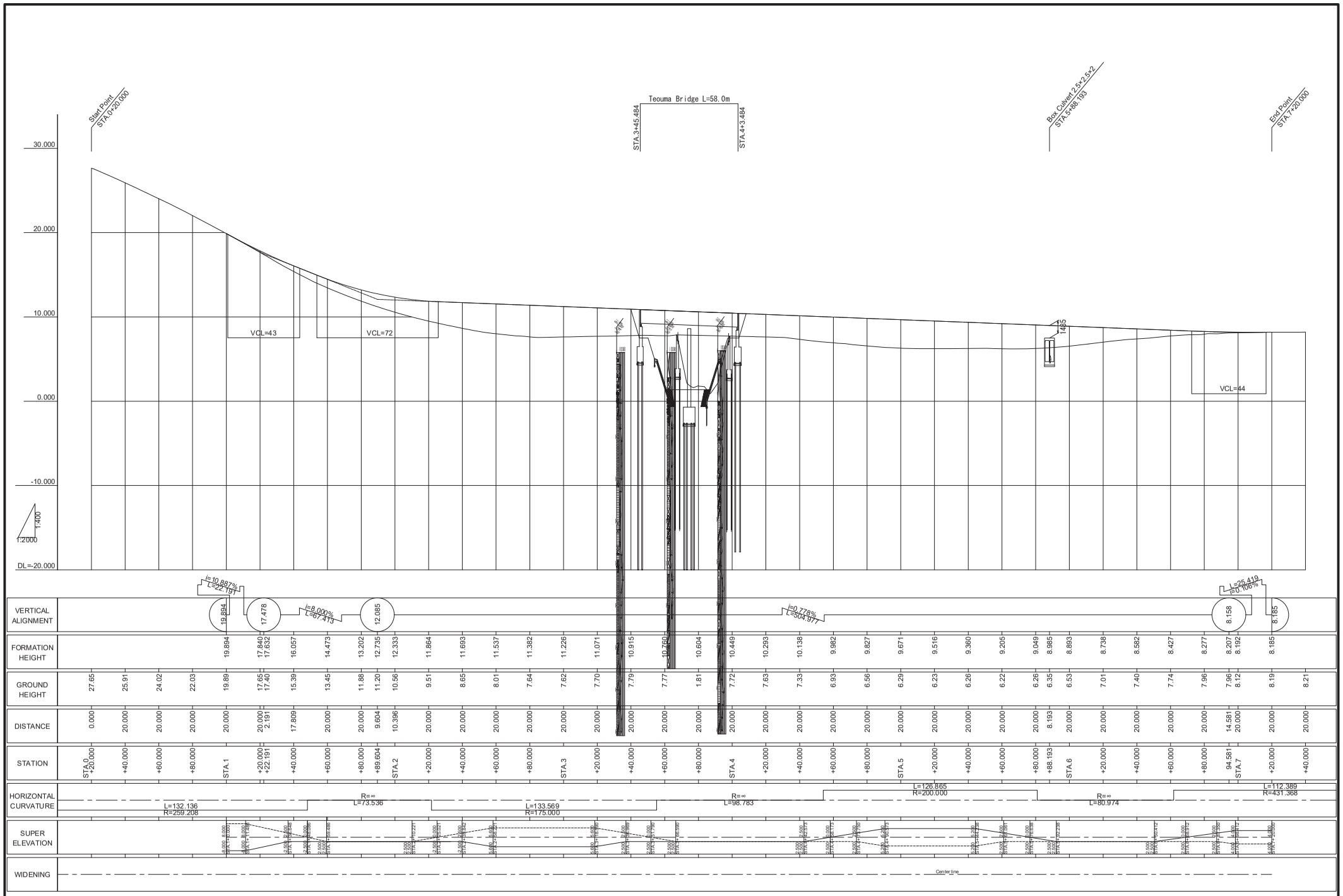

REV	DESCRIPTION	BY	DATE

REPUBLIC OF VANUATU
PUBLIC WORKS DEPARTMENT
MINISTRY OF INFRASTRUCTURE AND PUBLIC UTILITIES

PROJECT:
PREPARATORY SURVEY ON THE PROJECT FOR THE DISASTER RECONSTRUCTION OF TEOUMA BRIDGE IN REPUBLIC OF VANUATU

DESCRIPTION:
PROFILE
(MAIN ROAD)

CONSULTANTS REFERENCE
CTI ENGINEERING INTERNATIONAL CO., LTD.
KOKUSAI KOGYO CO., LTD.

DRAWN	CHECKED	APPROVED	P.W.D REFERENCE CHECKED	P.W.D REFERENCE APPROVED

SCALE (A3 SIZE)
V=1:400
H=1:2,000

DRAWING NO.
22

SHEET NO.

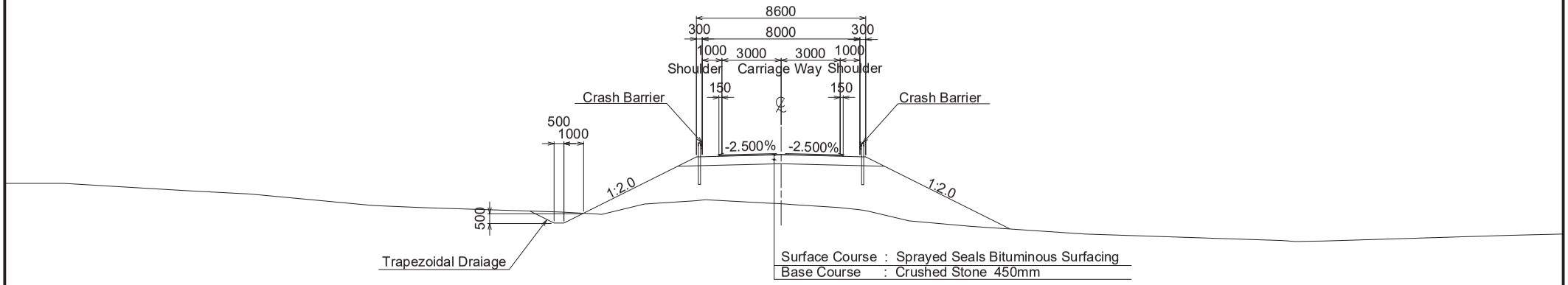

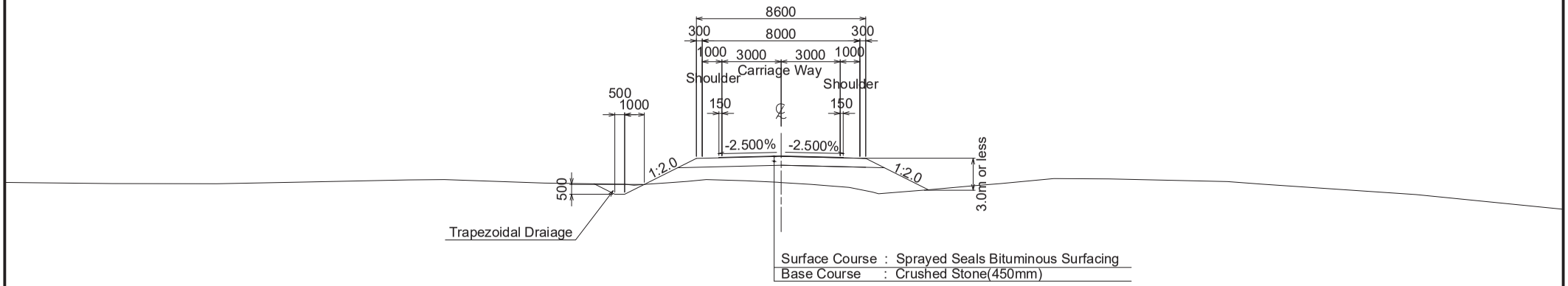

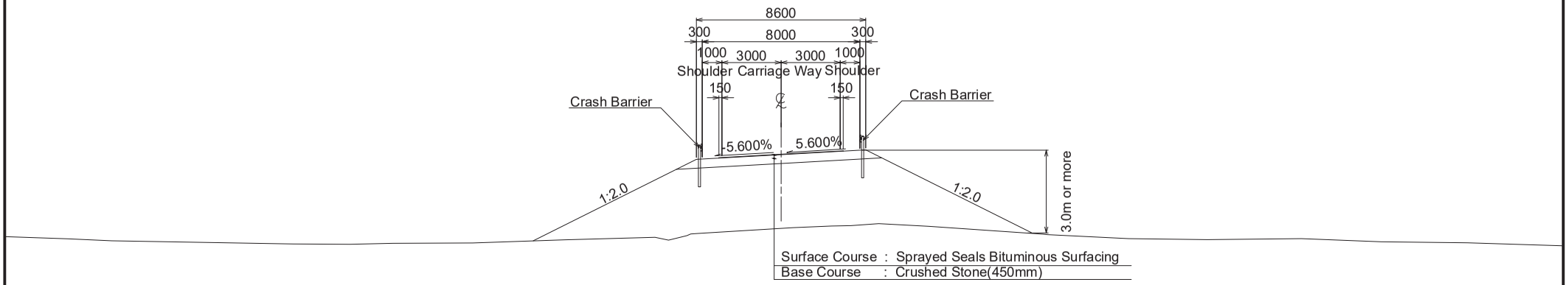

REV	DESCRIPTION	BY	DATE

REPUBLIC OF VANUATU
PUBLIC WORKS DEPARTMENT
MINISTRY OF INFRASTRUCTURE AND PUBLIC UTILITIES

PROJECT: PREPARATORY SURVEY ON THE PROJECT FOR THE DISASTER RECONSTRUCTION OF TEOUMA BRIDGE IN REPUBLIC OF VANUATU

DESCRIPTION: TYPICAL CROSS SECTION

CONSULTANTS REFERENCE	DRAWN	CHECKED	APPROVED	P.W.D REFERENCE CHECKED	P.W.D REFERENCE APPROVED	SCALE (A3 SIZE)	DRAWING NO.	SHEET NO.
CTI ENGINEERING INTERNATIONAL CO., LTD. KOKUSAI KOGYO CO., LTD.						1:200	23	

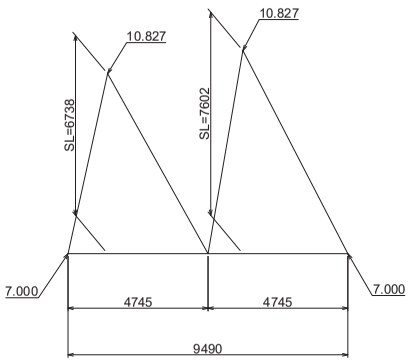

Wet Stone Pitching (1)

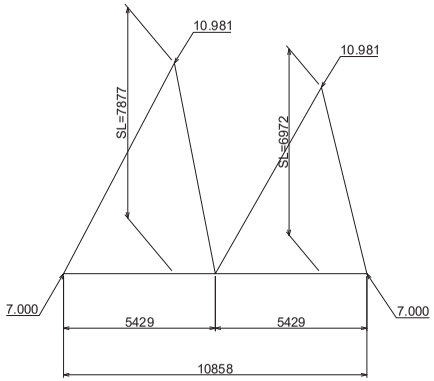

Wet Stone Pitching (2)

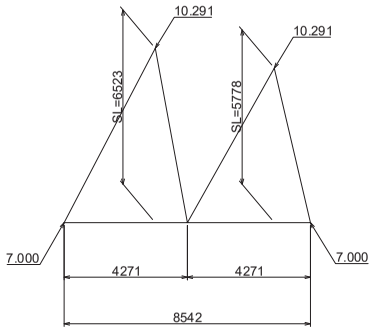

Wet Stone Pitching (3)

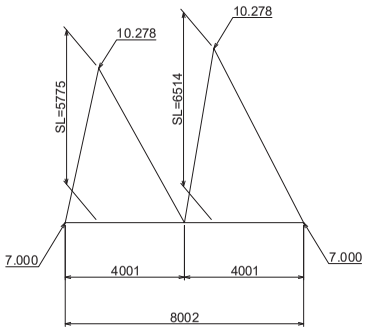

Wet Stone Pitching (4)

Development View S=1:200

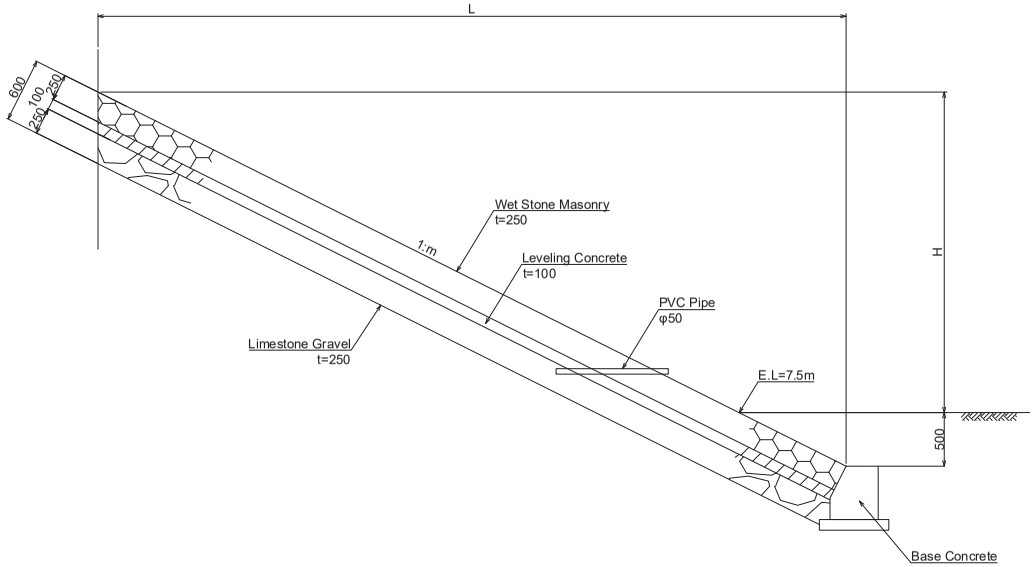

Side View S=1:50

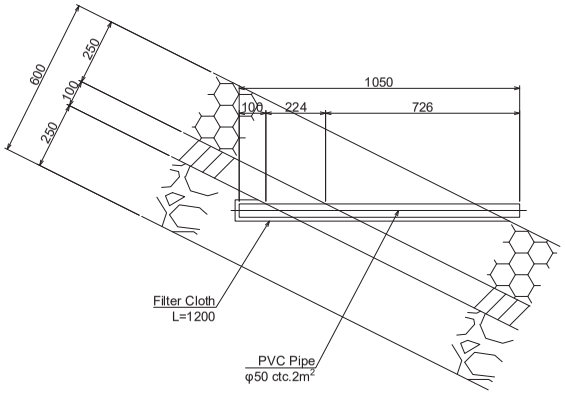

Detail of PVC Pipe Drain S=1:20

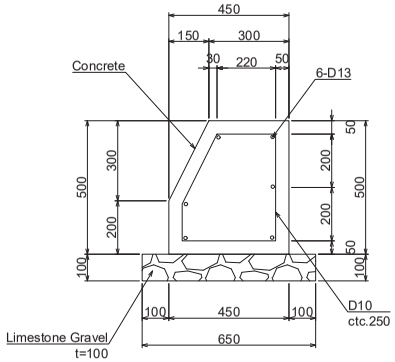

Detail of Base Concrete S=1:20

REV	DESCRIPTION	BY	DATE

REPUBLIC OF VANUATU
PUBLIC WORKS DEPARTMENT
MINISTRY OF INFRASTRUCTURE AND PUBLIC UTILITIES

PROJECT: PREPARATORY SURVEY ON THE PROJECT FOR THE DISASTER RECONSTRUCTION OF TEOUMA BRIDGE IN REPUBLIC OF VANUATU

DESCRIPTION: WET STONE PITCHING

CONSULTANTS REFERENCE	DRAWN	CHECKED	APPROVED	P.W.D REFERENCE CHECKED	P.W.D REFERENCE APPROVED	SCALE (A3 SIZE)	DRAWING NO.	SHEET NO.
CTI ENGINEERING INTERNATIONAL CO., LTD. KOKUSAI KOGYO CO., LTD.						AS SHOWN	24	

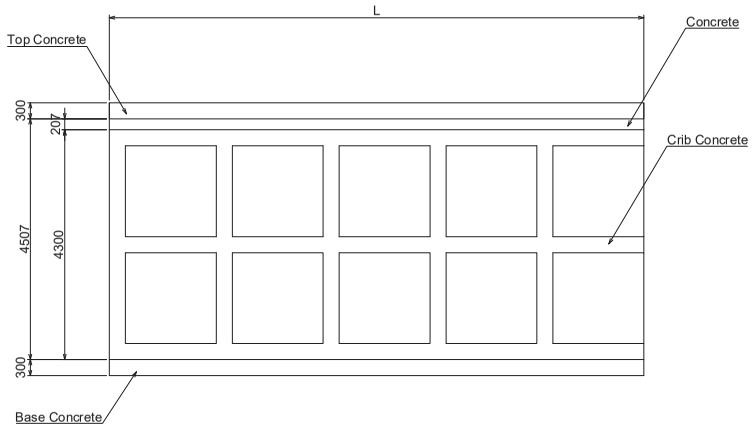

Plan S=1:100

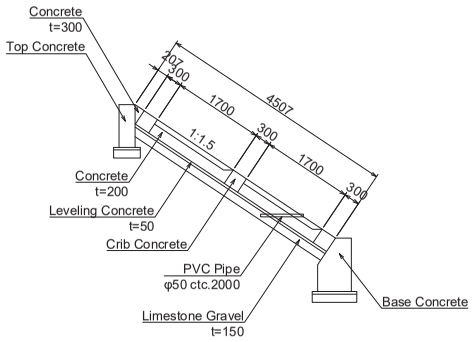

Side View S=1:100

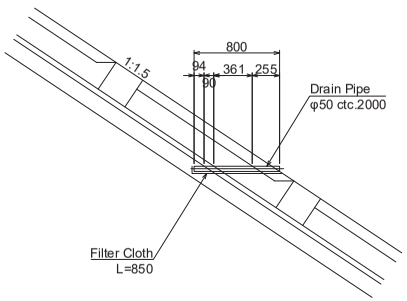

Detail of Drain Pipe S=1:50

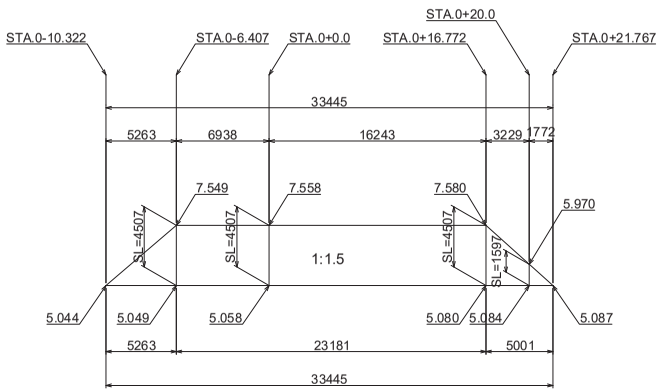

RCC (1)

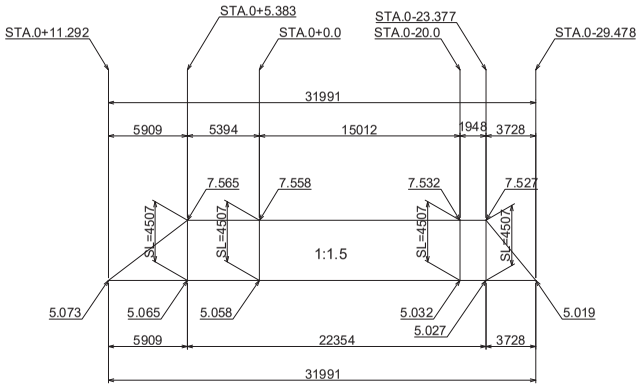

RCC(2)

Development View S=1:400

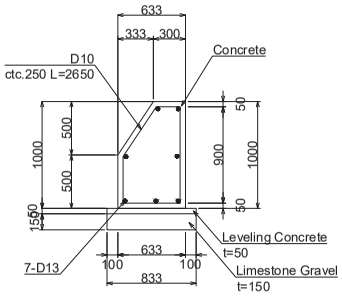

Detail of Base Concrete S=1:50

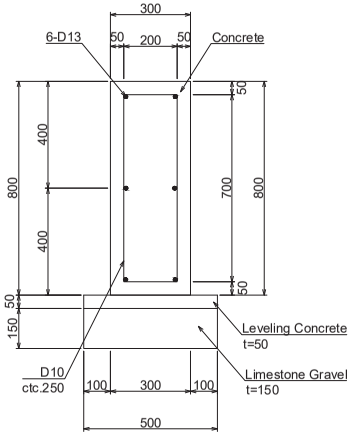

Detail of Top Concrete S=1:20

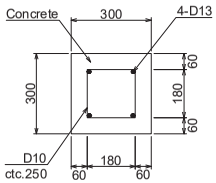

Detail of Crib Concrete S=1:20

REV	DESCRIPTION	BY	DATE

REPUBLIC OF VANUATU
PUBLIC WORKS DEPARTMENT
MINISTRY OF INFRASTRUCTURE AND PUBLIC UTILITIES

PROJECT: PREPARATORY SURVEY ON THE PROJECT FOR THE DISASTER RECONSTRUCTION OF TEOUMA BRIDGE IN REPUBLIC OF VANUATU

DESCRIPTION: REINFORCED CONCRETE CRIB (TYPE-A)

CONSULTANTS REFERENCE	DRAWN	CHECKED	APPROVED	P.W.D REFERENCE CHECKED	P.W.D REFERENCE APPROVED	SCALE (A3 SIZE)	DRAWING NO.	SHEET NO.
CTI ENGINEERING INTERNATIONAL CO., LTD. KOKUSAI KOGYO CO., LTD.						AS SHOWN	25	

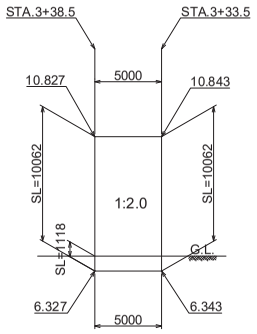

RCC (3)

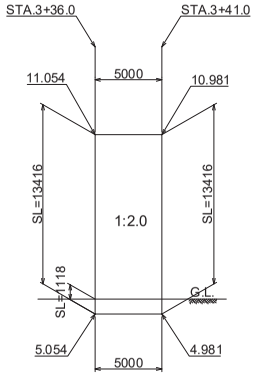

RCC (4)

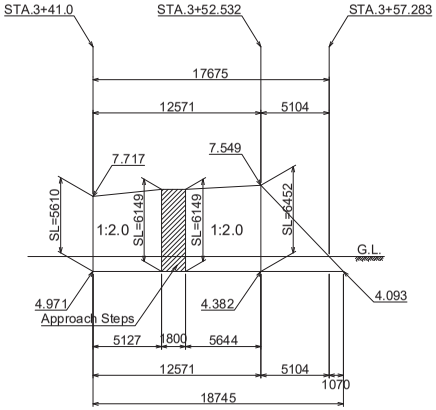

RCC (5)

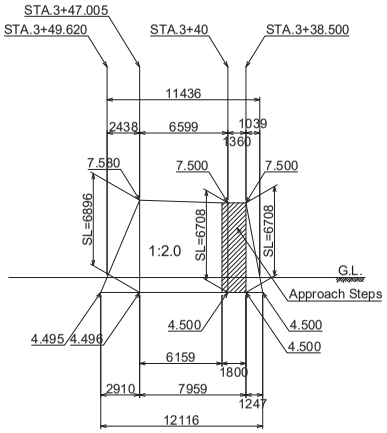

RCC (6)

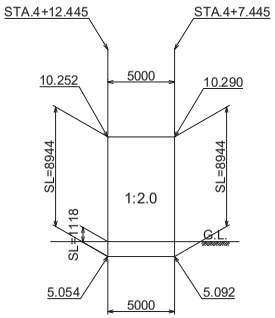

RCC (7)

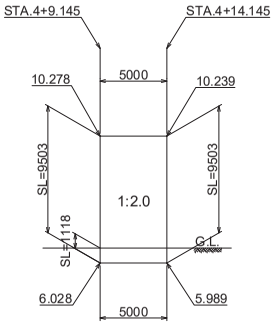

RCC (8)

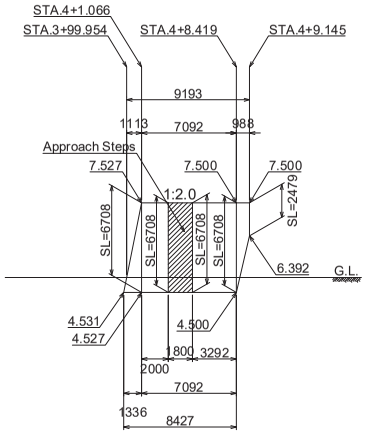

RCC (9)

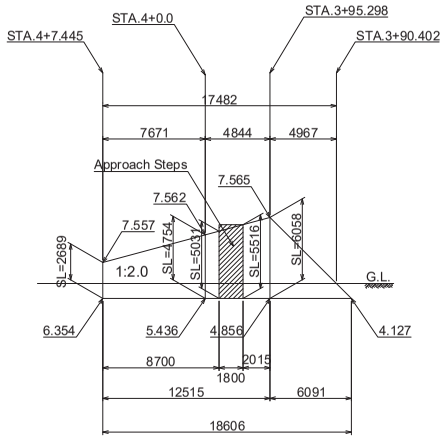

RCC (10)

Development View S=1:400

REV	DESCRIPTION	BY	DATE

REPUBLIC OF VANUATU
PUBLIC WORKS DEPARTMENT
MINISTRY OF INFRASTRUCTURE AND PUBLIC UTILITIES

PROJECT: PREPARATORY SURVEY ON THE PROJECT FOR THE DISASTER RECONSTRUCTION OF TEOUMA BRIDGE IN REPUBLIC OF VANUATU

DESCRIPTION: REINFORCED CONCRETE CRIB (TYPE-B) (1)

CONSULTANTS REFERENCE	DRAWN	CHECKED	APPROVED	P.W.D REFERENCE CHECKED	P.W.D REFERENCE APPROVED	SCALE (A3 SIZE)	DRAWING NO.	SHEET NO.
CTI ENGINEERING INTERNATIONAL CO., LTD. KOKUSAI KOGYO CO., LTD.						AS SHOWN	26	

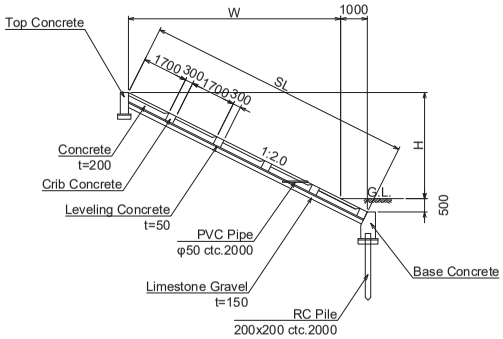

Side View S=1:200

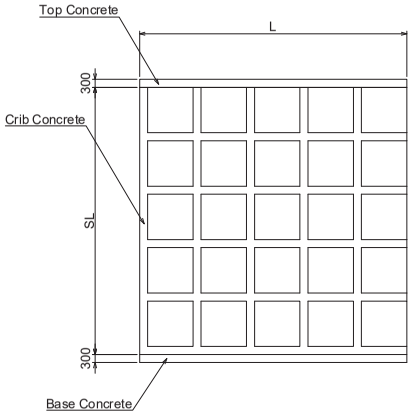

Plan S=1:200

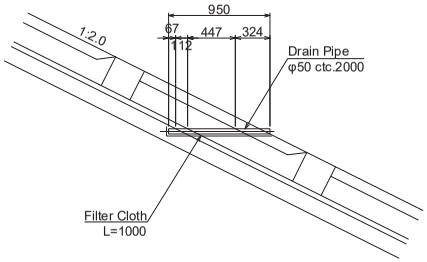

Detail of Drain Pipe S=1:50

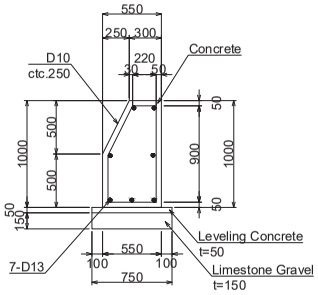

Detail of Base Concrete S=1:50

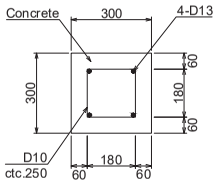

Detail of Crib Concrete S=1:20

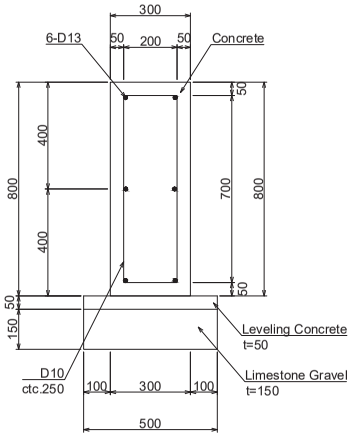

Detail of Top Concrete S=1:20

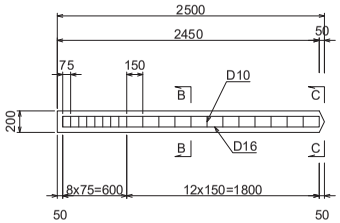

Section A - A

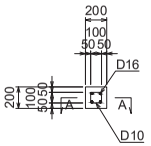

Section B - B

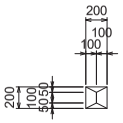

Section C - C

Detail of RC Pile S=1:50

REV	DESCRIPTION	BY	DATE

REPUBLIC OF VANUATU
PUBLIC WORKS DEPARTMENT
MINISTRY OF INFRASTRUCTURE AND PUBLIC UTILITIES

PROJECT: PREPARATORY SURVEY ON THE PROJECT FOR THE DISASTER RECONSTRUCTION OF TEOUMA BRIDGE IN REPUBLIC OF VANUATU

DESCRIPTION: REINFORCED CONCRETE CRIB (TYPE-B) (2)

CONSULTANTS REFERENCE	DRAWN	CHECKED	APPROVED	P.W.D REFERENCE CHECKED	P.W.D REFERENCE APPROVED	SCALE (A3 SIZE)	DRAWING NO.	SHEET NO.
CTI ENGINEERING INTERNATIONAL CO., LTD.						AS SHOWN	27	
KOKUSAI KOGYO CO., LTD.								

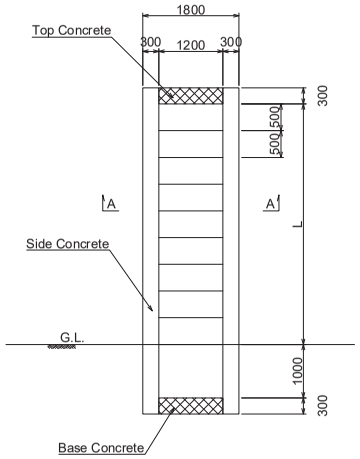

Plan S=1:100

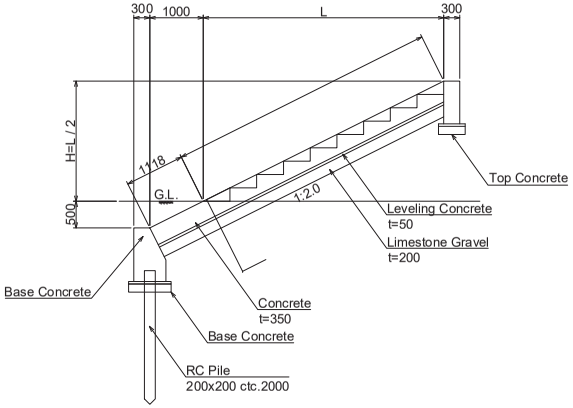

Side View S=1:100

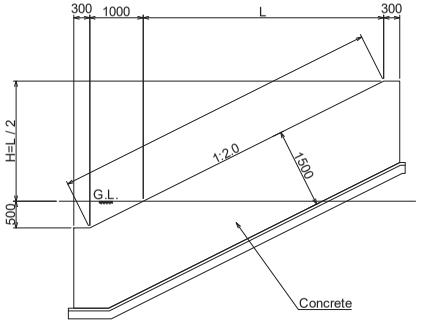

Side View (Side Concrete) S=1:100

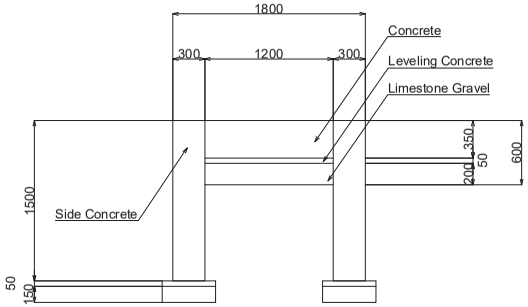

Section A-A S=1:50

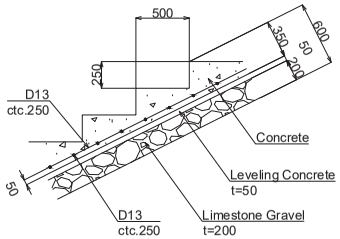

Detail of Steps S=1:50

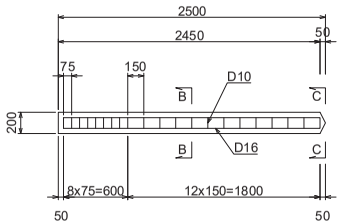

Section A - A

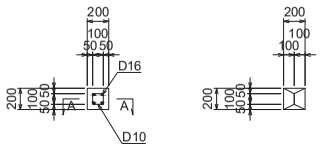

Section B - B

Section C - C

Detail of RC Pile S=1:50

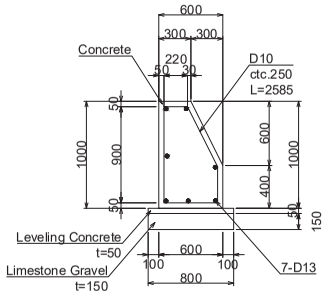

Detail of Base Concrete S=1:50

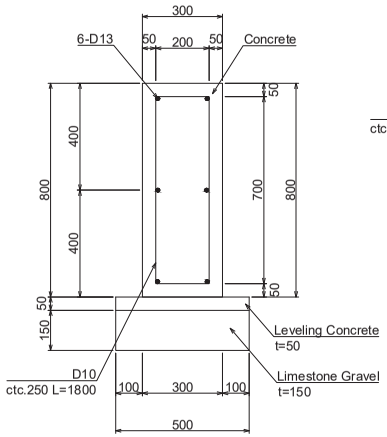

Detail of Top Concrete S=1:20

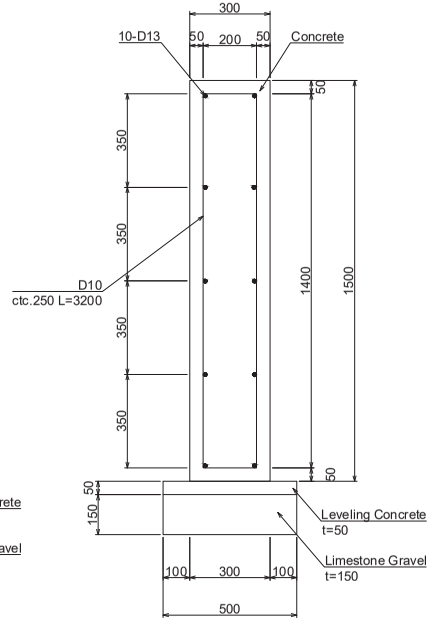

Detail of Side Concrete S=1:20

REV	DESCRIPTION	BY	DATE

REPUBLIC OF VANUATU
PUBLIC WORKS DEPARTMENT
MINISTRY OF INFRASTRUCTURE AND PUBLIC UTILITIES

PROJECT: PREPARATORY SURVEY ON THE PROJECT FOR THE DISASTER RECONSTRUCTION OF TEOUMA BRIDGE IN REPUBLIC OF VANUATU

DESCRIPTION: APPROACH STEPS AT ROAD EMBANKMENT

CONSULTANTS REFERENCE	DRAWN	CHECKED	APPROVED	P.W.D REFERENCE CHECKED	P.W.D REFERENCE APPROVED	SCALE (A3 SIZE)	DRAWING NO.	SHEET NO.
CTI ENGINEERING INTERNATIONAL CO., LTD. KOKUSAI KOGYO CO., LTD.						AS SHOWN	28	

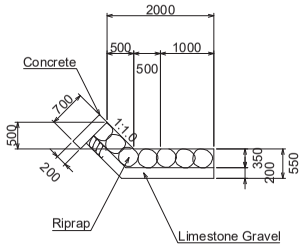

Trapezoidal Drainage at Box Culvert S=1:100

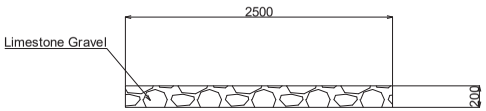

Maintenance Road S=1:50

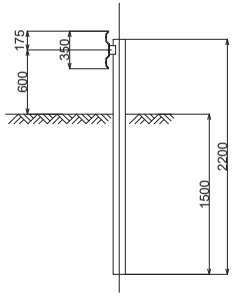

Crash Barrier S=1:50

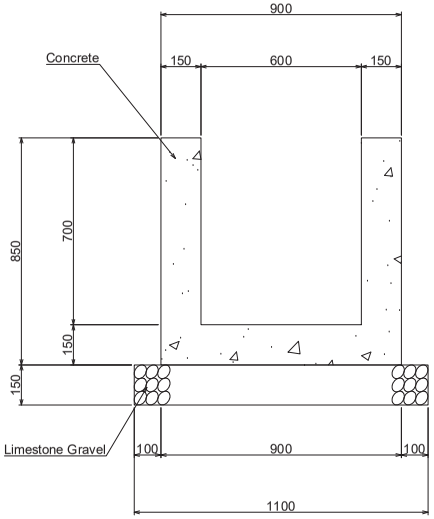

Catch Basin (600x600x700) S=1:20

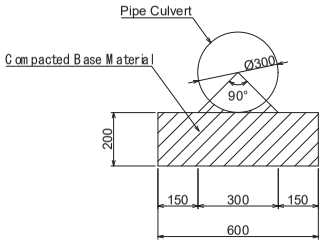

Pipe Culvert φ300 S=1:20

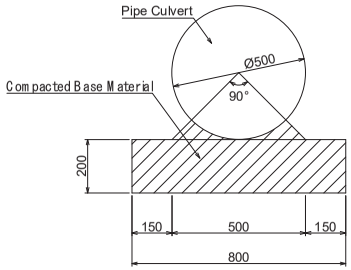

Pipe Culvert φ500 S=1:20

REV	DESCRIPTION	BY	DATE

REPUBLIC OF VANUATU
PUBLIC WORKS DEPARTMENT
MINISTRY OF INFRASTRUCTURE AND PUBLIC UTILITIES

PROJECT: PREPARATORY SURVEY ON THE PROJECT FOR THE DISASTER RECONSTRUCTION OF TEOUMA BRIDGE IN REPUBLIC OF VANUATU

DESCRIPTION: STRUCTURE

CONSULTANTS REFERENCE: CTI ENGINEERING INTERNATIONAL CO., LTD. / KOKUSAI KOGYO CO., LTD.

DRAWN	CHECKED	APPROVED	P.W.D REFERENCE CHECKED	P.W.D REFERENCE APPROVED	SCALE (A3 SIZE)	DRAWING NO.	SHEET NO.
					AS SHOWN	29	

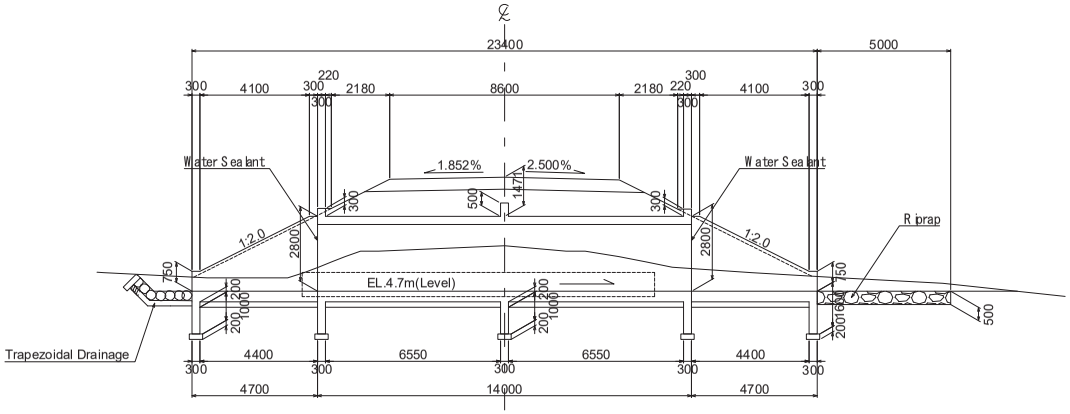

SIDE VIEW S=1:200

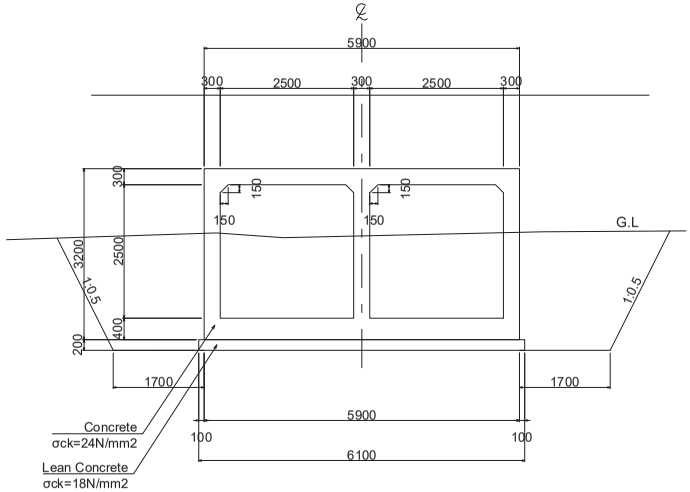

STANDARD SECTION OF BOX CULVERT S=1:100

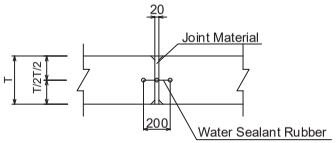

DETAIL OF WATER SEALANT S=1:40

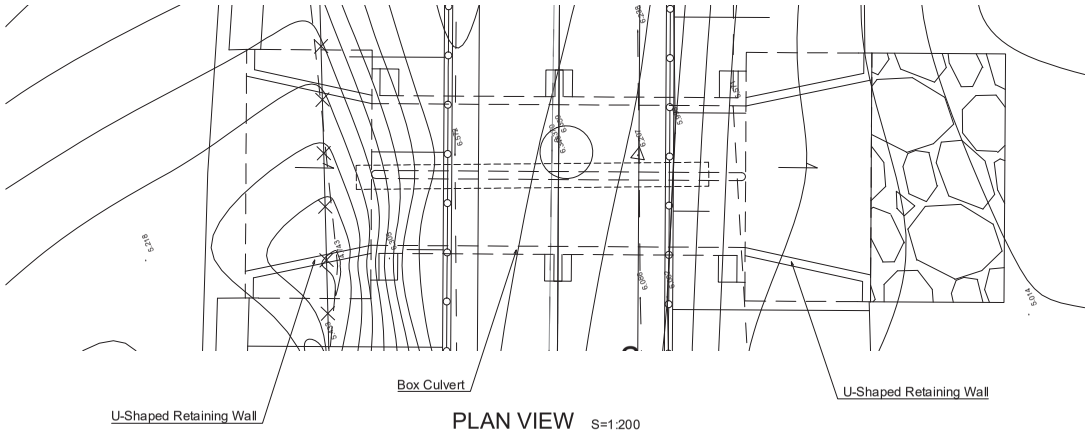

PLAN VIEW S=1:200

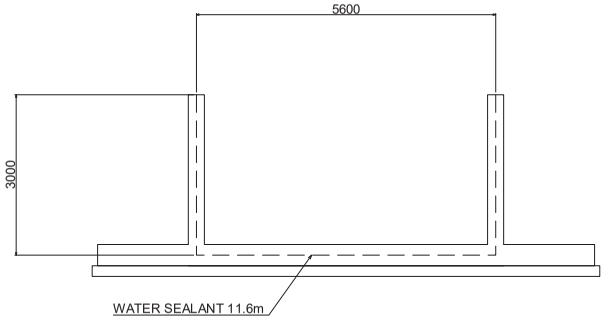

JOINT SECTION S=1:100

REV	DESCRIPTION	BY	DATE

REPUBLIC OF VANUATU
PUBLIC WORKS DEPARTMENT
MINISTRY OF INFRASTRUCTURE AND PUBLIC UTILITIES

PROJECT: PREPARATORY SURVEY ON THE PROJECT FOR THE DISASTER RECONSTRUCTION OF TEOUMA BRIDGE IN REPUBLIC OF VANUATU

DESCRIPTION: GENERAL VIEW OF BOX CULVERT (1)

CONSULTANTS REFERENCE	DRAWN	CHECKED	APPROVED	P.W.D REFERENCE CHECKED	P.W.D REFERENCE APPROVED	SCALE (A3 SIZE)	DRAWING NO.	SHEET NO.
CTI ENGINEERING INTERNATIONAL CO., LTD. KOKUSAI KOGYO CO., LTD.						AS SHOWN	30	

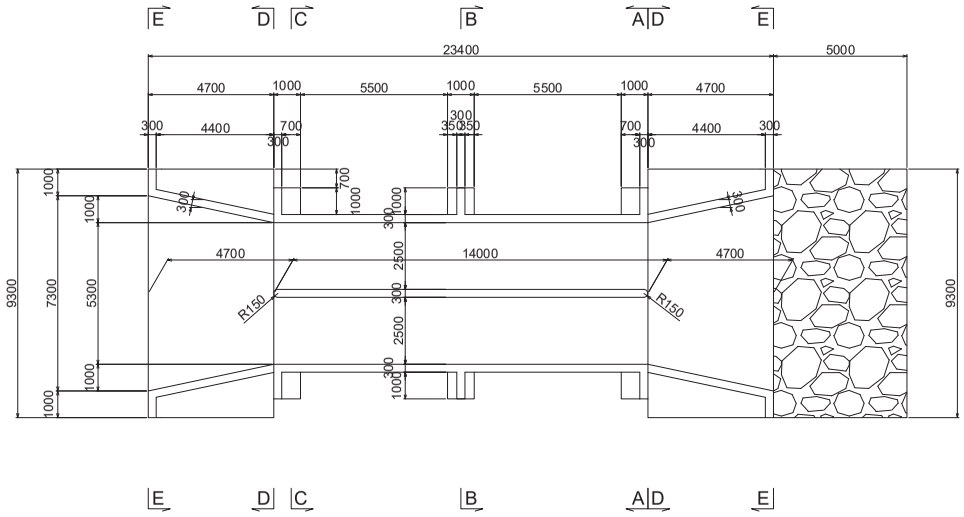

PLAN S=1:200

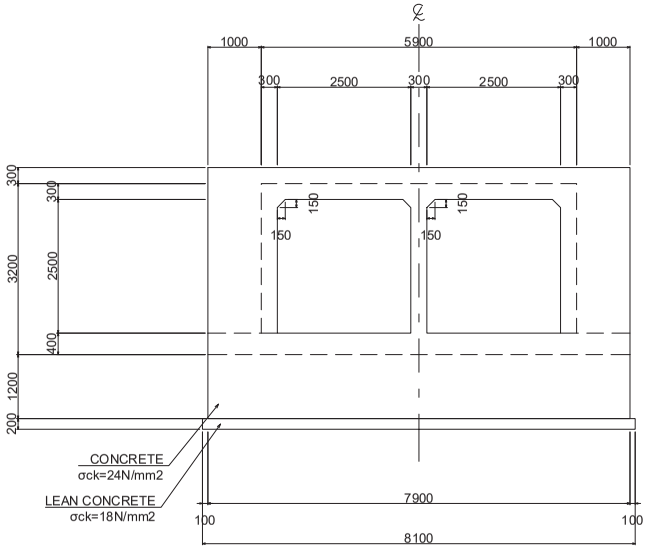

A-A SECTION S=1:100

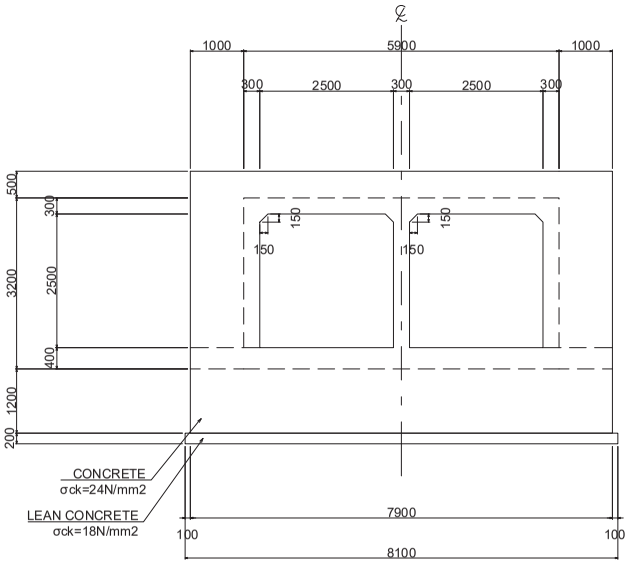

B-B SECTION S=1:100

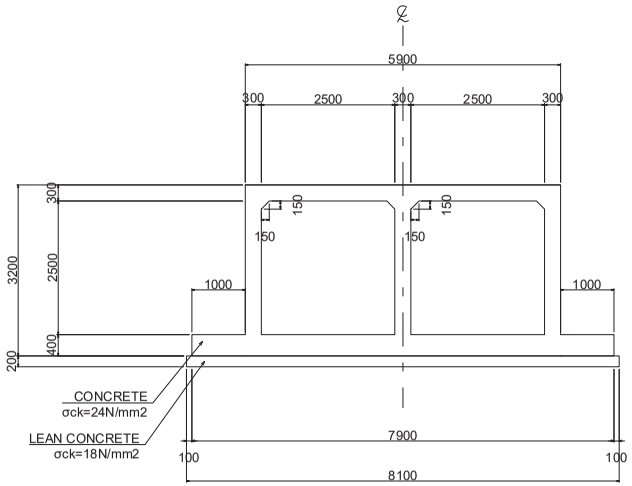

C-C SECTION S=1:100

REV	DESCRIPTION	BY	DATE

REPUBLIC OF VANUATU
PUBLIC WORKS DEPARTMENT
MINISTRY OF INFRASTRUCTURE AND PUBLIC UTILITIES

PROJECT: PREPARATORY SURVEY ON THE PROJECT FOR THE DISASTER RECONSTRUCTION OF TEOUMA BRIDGE IN REPUBLIC OF VANUATU

DESCRIPTION: GENERAL VIEW OF BOX CULVERT (2)

CONSULTANTS REFERENCE	DRAWN	CHECKED	APPROVED	P.W.D REFERENCE CHECKED	P.W.D REFERENCE APPROVED	SCALE (A3 SIZE)	DRAWING NO.	SHEET NO.
CTI ENGINEERING INTERNATIONAL CO., LTD.						AS SHOWN	31	
KOKUSAI KOGYO CO., LTD.								

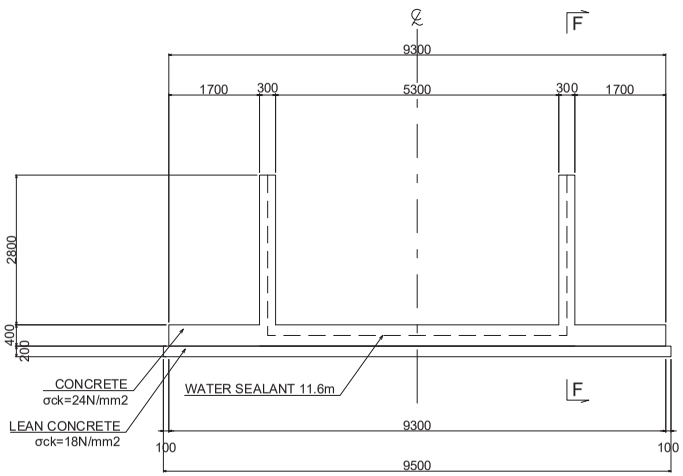

D-D SECTION S=1:100

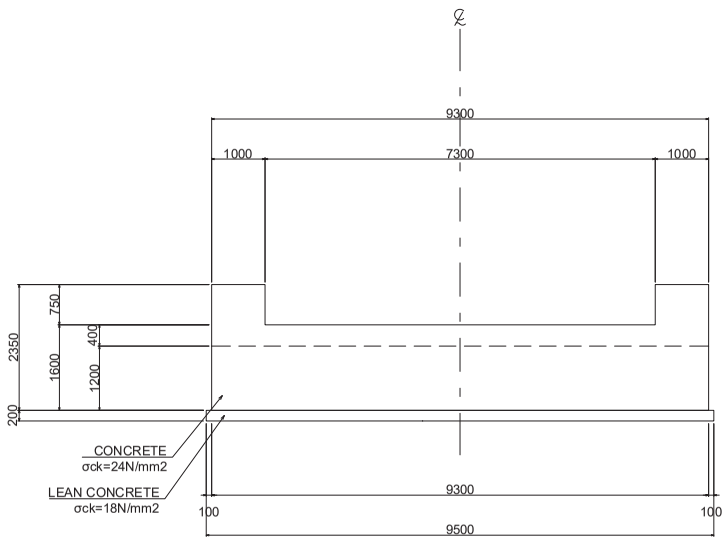

E-E SECTION S=1:100

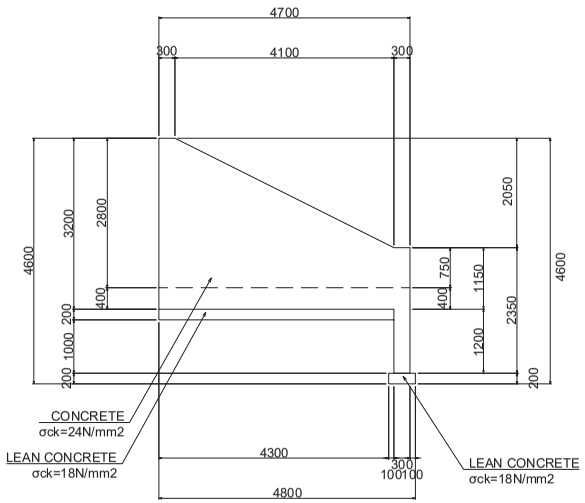

F-F SECTION S=100

REV	DESCRIPTION	BY	DATE

REPUBLIC OF VANUATU
PUBLIC WORKS DEPARTMENT
MINISTRY OF INFRASTRUCTURE AND PUBLIC UTILITIES

PROJECT: PREPARATORY SURVEY ON THE PROJECT FOR THE DISASTER RECONSTRUCTION OF TEOUMA BRIDGE IN REPUBLIC OF VANUATU

DESCRIPTION: GENERAL VIEW OF BOX CULVERT (3)

CONSULTANTS REFERENCE	DRAWN	CHECKED	APPROVED	P.W.D REFERENCE CHECKED	P.W.D REFERENCE APPROVED	SCALE (A3 SIZE)	DRAWING NO.	SHEET NO.
CTI ENGINEERING INTERNATIONAL CO., LTD.						AS SHOWN	32	
KOKUSAI KOGYO CO., LTD.								

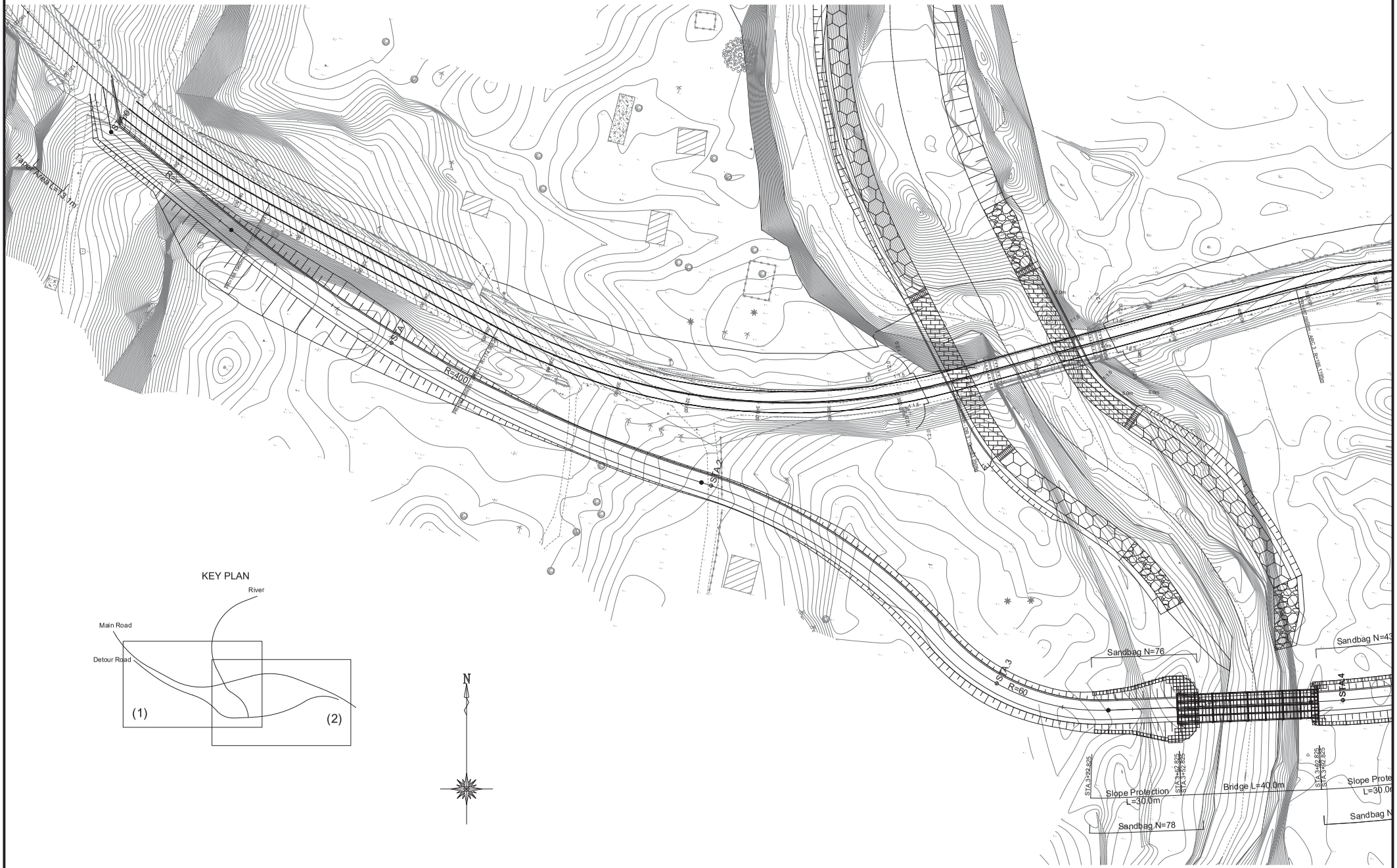

REV	DESCRIPTION	BY	DATE

REPUBLIC OF VANUATU
PUBLIC WORKS DEPARTMENT
MINISTRY OF INFRASTRUCTURE AND PUBLIC UTILITIES

PROJECT:
PREPARATORY SURVEY ON THE PROJECT FOR THE DISASTER RECONSTRUCTION OF TEOUMA BRIDGE IN REPUBLIC OF VANUATU

DESCRIPTION:
PLAN(1)
(DETOUR ROAD)

CONSULTANTS REFERENCE	DRAWN	CHECKED	APPROVED	P.W.D REFERENCE CHECKED	P.W.D REFERENCE APPROVED	SCALE (A3 SIZE)	DRAWING NO.	SHEET NO.
CTI ENGINEERING INTERNATIONAL CO., LTD. KOKUSAI KOGYO CO., LTD.						1:1000	33	

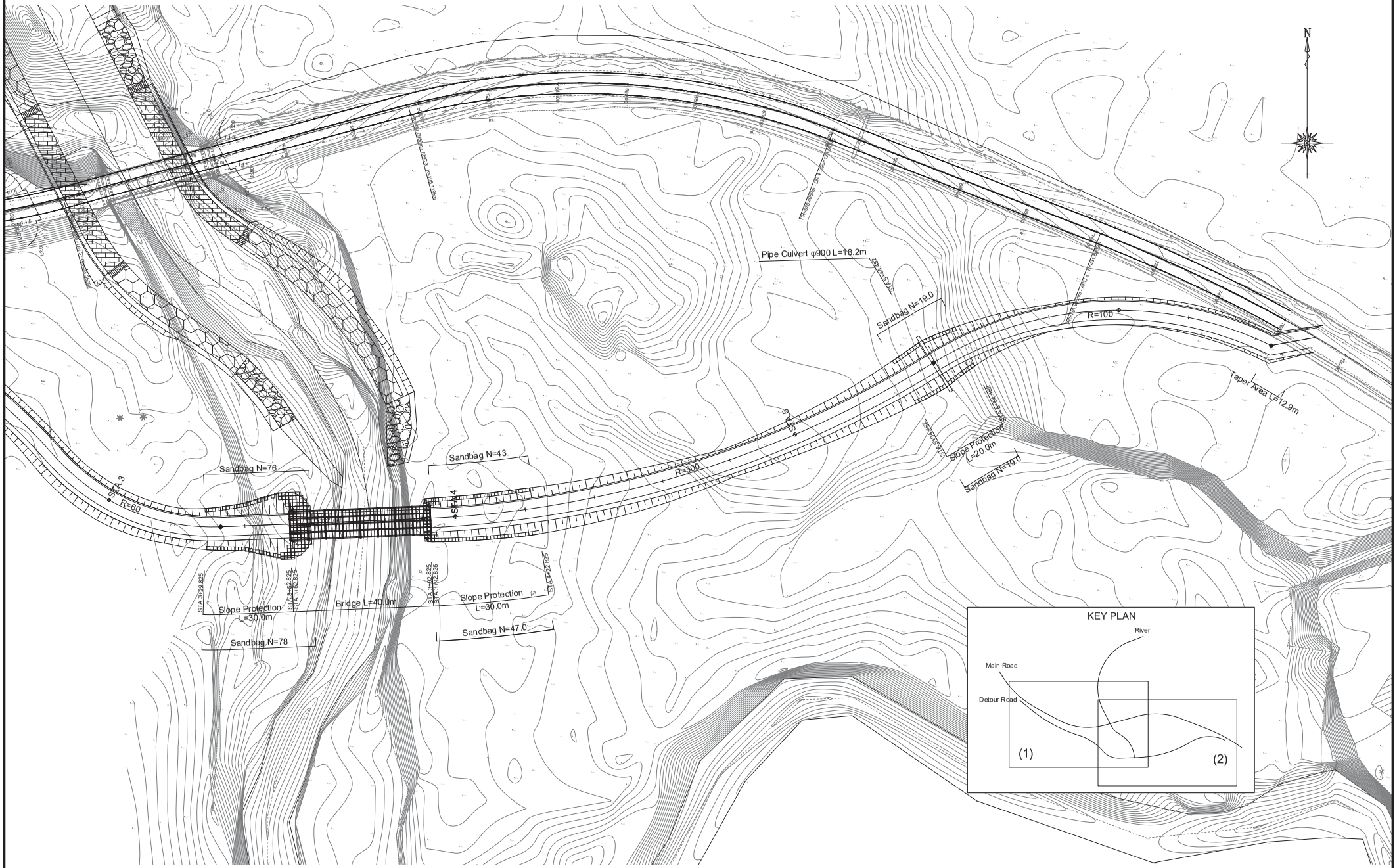

REV	DESCRIPTION	BY	DATE

REPUBLIC OF VANUATU
PUBLIC WORKS DEPARTMENT
MINISTRY OF INFRASTRUCTURE AND PUBLIC UTILITIES

PROJECT:
PREPARATORY SURVEY ON THE PROJECT FOR THE DISASTER RECONSTRUCTION OF TEOUMA BRIDGE IN REPUBLIC OF VANUATU

DESCRIPTION:
PLAN(2)
(DETOUR ROAD)

CONSULTANTS REFERENCE	DRAWN	CHECKED	APPROVED	P.W.D REFERENCE CHECKED	P.W.D REFERENCE APPROVED	SCALE (A3 SIZE)	DRAWING NO.	SHEET NO.
CTI ENGINEERING INTERNATIONAL CO., LTD. KOKUSAI KOGYO CO., LTD.						1:1000	34	

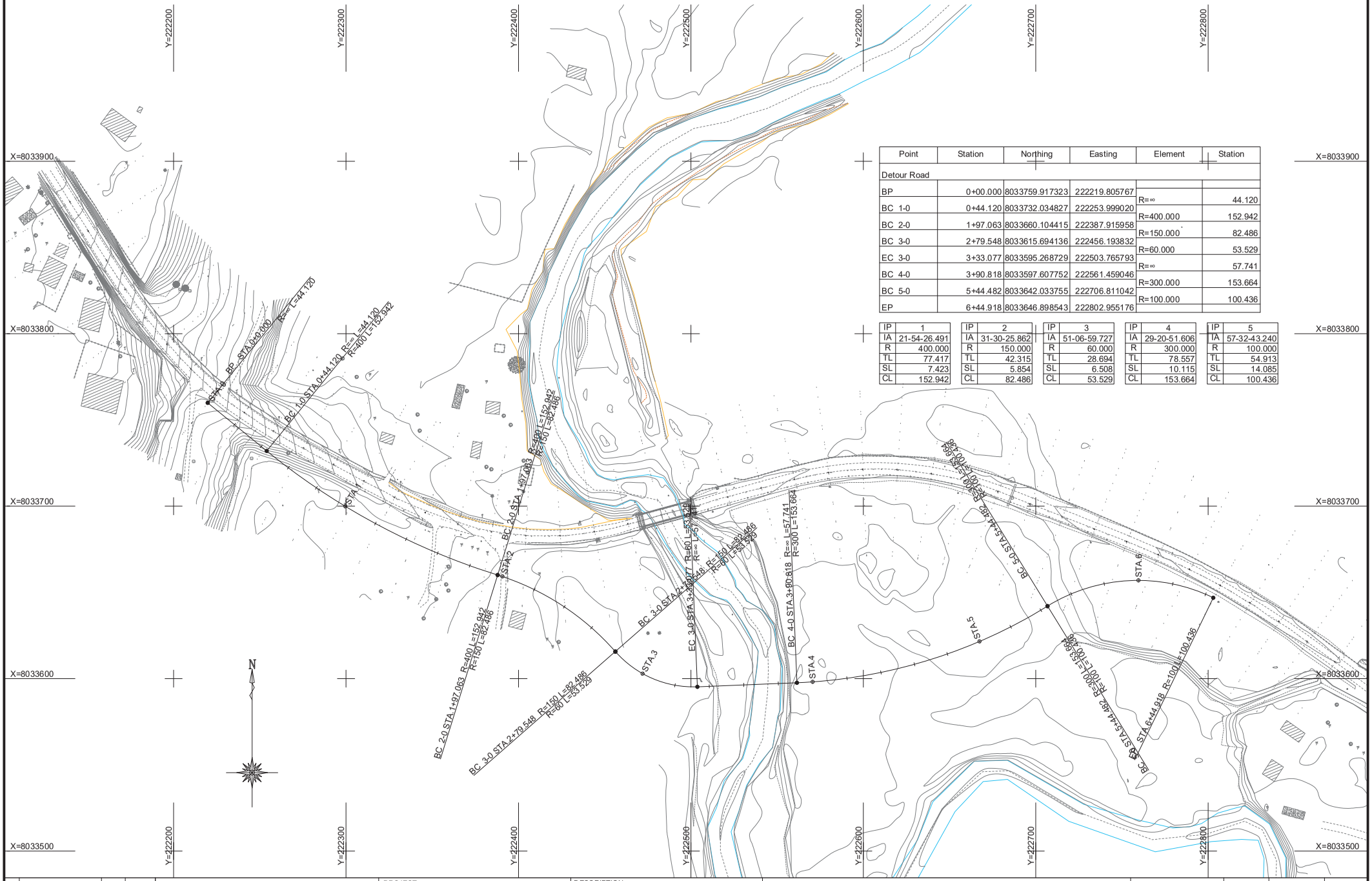

Point	Station	Northing	Easting	Element	Station
Detour Road					
BP	0+00.000	8033759.917323	222219.805767		
BC 1-0	0+44.120	8033732.034827	222253.999020	R=∞	44.120
BC 2-0	1+97.063	8033660.104415	222387.915958	R=400.000	152.942
BC 3-0	2+79.548	8033615.694136	222456.193832	R=150.000	82.486
EC 3-0	3+33.077	8033595.268729	222503.765793	R=60.000	53.529
BC 4-0	3+90.818	8033597.607752	222561.459046	R=∞	57.741
BC 5-0	5+44.482	8033642.033755	222706.811042	R=300.000	153.664
EP	6+44.918	8033646.898543	222802.955176	R=100.000	100.436

IP	1
IA	21-54-26.491
R	400.000
TL	77.417
SL	7.423
CL	152.942

IP	2
IA	31-30-25.862
R	150.000
TL	42.315
SL	5.854
CL	82.486

IP	3
IA	51-06-59.727
R	60.000
TL	28.694
SL	6.508
CL	53.529

IP	4
IA	29-20-51.606
R	300.000
TL	78.557
SL	10.115
CL	153.664

IP	5
IA	57-32-43.240
R	100.000
TL	54.913
SL	14.085
CL	100.436

REV	DESCRIPTION	BY	DATE

REPUBLIC OF VANUATU
PUBLIC WORKS DEPARTMENT
MINISTRY OF INFRASTRUCTURE AND PUBLIC UTILITIES

PROJECT:
PREPARATORY SURVEY ON THE PROJECT FOR THE DISASTER RECONSTRUCTION OF TEOUMA BRIDGE IN REPUBLIC OF VANUATU

DESCRIPTION:
DETOUR ROAD ALIGNMENT

CONSULTANTS REFERENCE
CTI ENGINEERING INTERNATIONAL CO., LTD.
KOKUSAI KOGYO CO., LTD.

DRAWN	CHECKED	APPROVED	P.W.D REFERENCE CHECKED	P.W.D REFERENCE APPROVED

SCALE (A3 SIZE): 1:2000
DRAWING NO.: 35
SHEET NO.:

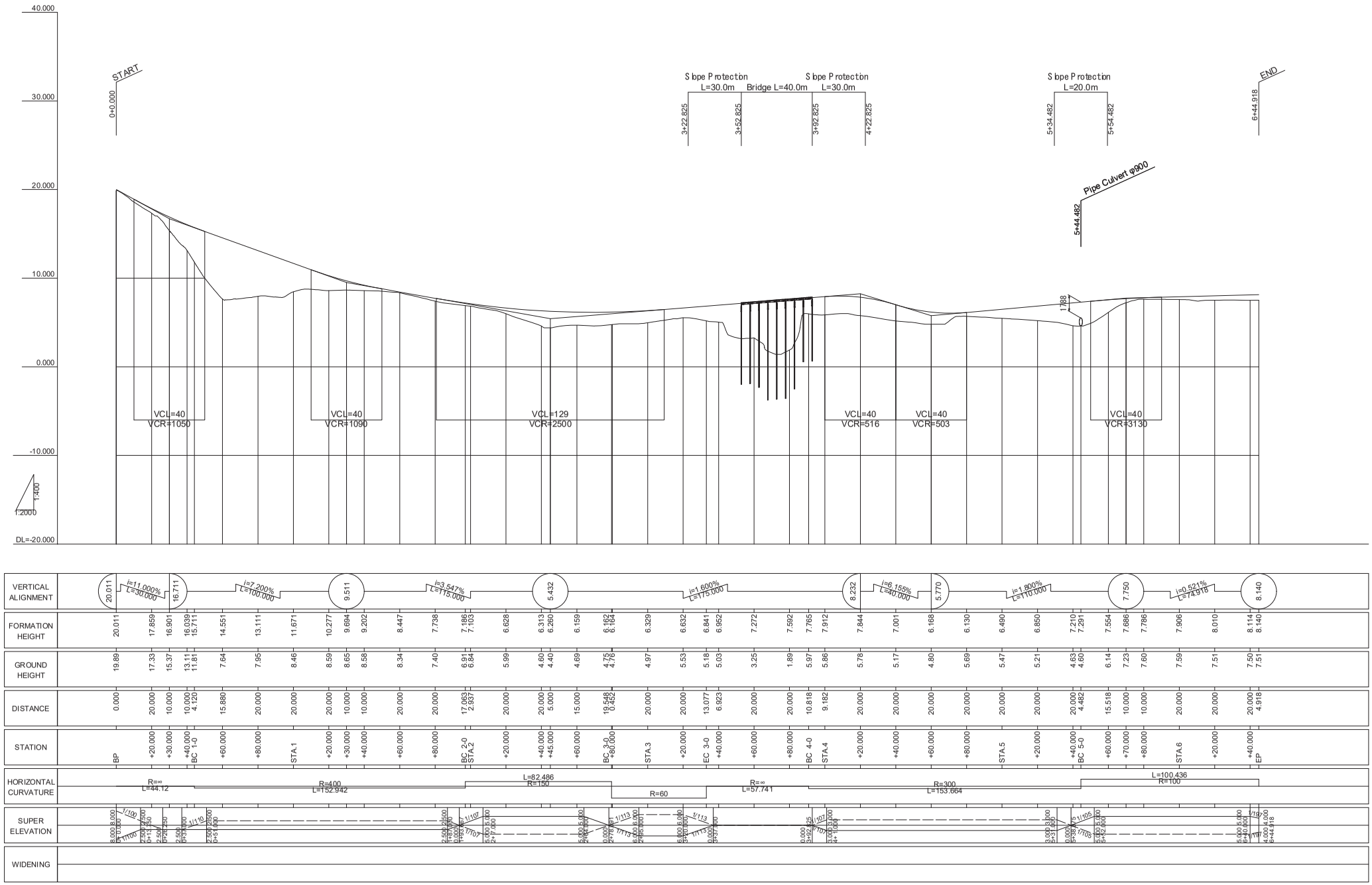

REV	DESCRIPTION	BY	DATE

REPUBLIC OF VANUATU
PUBLIC WORKS DEPARTMENT
MINISTRY OF INFRASTRUCTURE AND PUBLIC UTILITIES

PROJECT:
PREPARATORY SURVEY ON THE PROJECT FOR THE DISASTER RECONSTRUCTION OF TEOUMA BRIDGE IN REPUBLIC OF VANUATU

DESCRIPTION:
PROFILE
(DETOUR ROAD)

CONSULTANTS REFERENCE
CTI ENGINEERING INTERNATIONAL CO., LTD.
KOKUSAI KOGYO CO., LTD.

DRAWN	CHECKED	APPROVED	P.W.D REFERENCE CHECKED	P.W.D REFERENCE APPROVED	SCALE (A3 SIZE)	DRAWING NO.	SHEET NO.
					V=1:400 H=1:2,000	36	

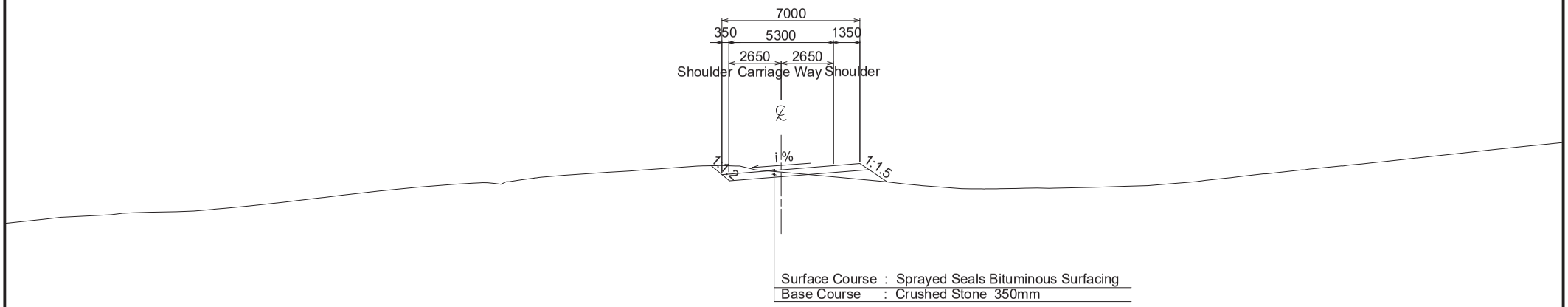

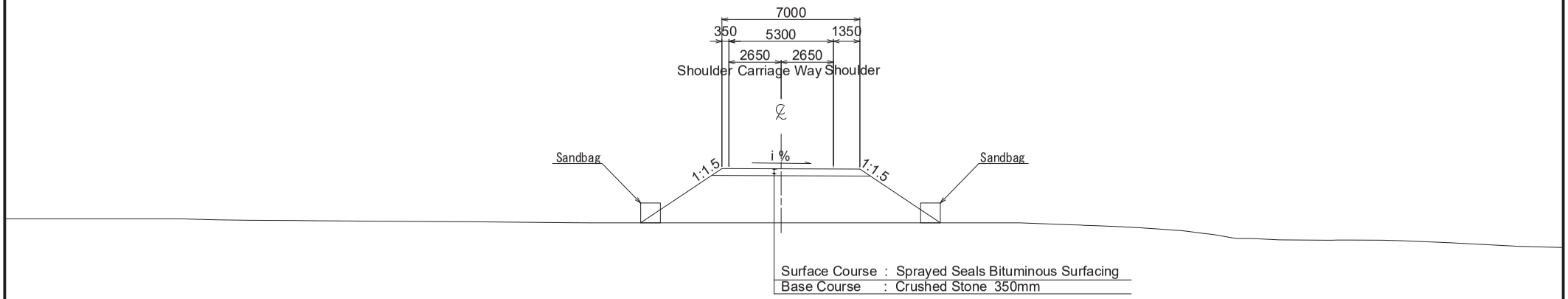

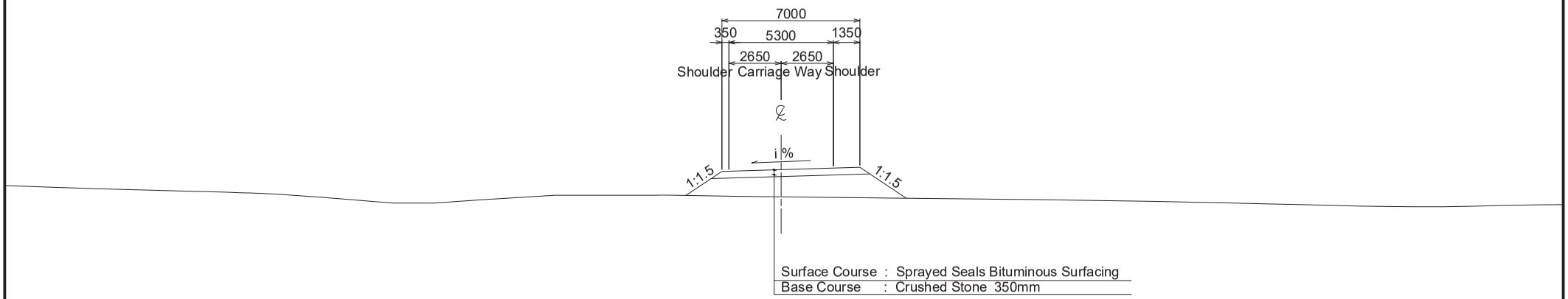

REV	DESCRIPTION	BY	DATE

REPUBLIC OF VANUATU
PUBLIC WORKS DEPARTMENT
MINISTRY OF INFRASTRUCTURE AND PUBLIC UTILITIES

PROJECT:
PREPARATORY SURVEY ON THE PROJECT FOR THE DISASTER RECONSTRUCTION OF TEOUMA BRIDGE IN REPUBLIC OF VANUATU

DESCRIPTION:
TYPICAL CROSS SECTION (DETOUR ROAD)

CONSULTANTS REFERENCE	DRAWN	CHECKED	APPROVED	P.W.D REFERENCE CHECKED	P.W.D REFERENCE APPROVED	SCALE (A3 SIZE)	DRAWING NO.	SHEET NO.
CTI ENGINEERING INTERNATIONAL CO., LTD. KOKUSAI KOGYO CO., LTD.						1:200	37	

別添 7：環境モニタリングフォーム（案）

Proposed Monitoring Form

Environmental Management Plan

Proposed monitoring forms, based on Table 1.3-19 Environmental Management and Monitoring Plan (EMMP), are shown below.

1. Response/Actions to Comments and Guidance from Government Authorities and the Public

Monitoring Item	Monitoring Results during Report Period
Number and contents of formal comments made by the public	
Number and contents of responses from Government agencies	

2. Pollution

1) Air Quality

Item	Unit	Situations of Dust Based on the observation	Measurement Point	Frequency
Dust	-	1. good 2. Acceptable level 3. bad	Construction site	Daily

2) Surface Water Quality

Item	Unit	Down-stream	Main point	Up-stream	Country Standards	Standards for Contract	Referred National Standards	Frequency
pH	-				-	6.5-9.5	NF T 90-008	weekly
Temperature	degree				-	<3		
Turbidity	NTU				-	≦2	standards for tap water in japan	
DO	mg/l				-	≧7.5	rivers categorized as AA, which water can be used as drinking water with simple filtering method in Japan	
Oil & grease	Yes/No				-	observed		

Result of the baseline survey and standards

Analysis	Sample 1	Sample 2	Sample 3	Unit	Standard
pH	8.03	8.01	8.27		>6.5 & < 9.5 (NF T 90-008)
Turbidity	2.74	1.98	0.5	NTU	(≦2 standards for tap water in japan)
Conductivity	455	462	457	μS/cm	

Source: Baseline survey (JICA study)

3) Noise and Vibrations

Item	Unit	Measured Value (mean)	Measured Value (Max)	Country Standards	Standards for Contract	Referred International Standards	Measurement Point	Frequency
Noise LAeq	dB(A)					70 (Japan)	Construction site/edge of the construction area (near houses)	Monthly
Vibrations	dB(A)					75 (Japan)	Construction site/edge of the construction area (near houses)	Monthly

Ambient noise standards in Japan

No	Area	Time During Day (hours)	Limits, dB(a)
1.	Commercial/Industrial Noise	6:00 – 22:00	70 dB or less
2.	Neighborhood Noise	6:00 – 22:00	55 dB or less

Result of the baseline survey

No	Area	Time During Day (hours)	Limits, dB(a)
1.			
2.			

4) Waste (Construction waste)

Date: Item: Waste Management Mark: "✔" if management is done as required

Location	Kind of waste	Volume of waste (m3)	Final disposal or reuse	Stored at designated place	Waste separation	Remark

5) Mitigation measures

Date: Mark: "✔" if mitigation measure is done

No	item	Monitoring Site	Mitigation measure is done or not Conditions of facilities	Remarks
1	Check the conditions of vehicles (dust control)			
2	Watering (dust control)			
3	Covering truck load with a sheet (dust control)			
4	Using oil pan (water/soil pollution prevention)			
5	Temporary cofferdam			
6	Sedimentation pond/drainage			

3. Natural Environment

1) Biota and ecosystems

Item	Monitoring Results during Report Period	Measures to be Taken	Frequency
Clearance activities (visual inspection)			Weekly
Management of top soil (visual inspection)			Weekly

2) Hydrological Situation

Item	Monitoring Results during Report Period	Measures to be Taken	Frequency
Impact of construction work on steep slope (visual inspection)	*Soil erosion*		Weekly

4. Social Environment

1) Land acquisition

Pre-Construction phase

Resettlement, Land expropriation, and compensation for assets and crops (monthly report)

		Planned Total	Unit	2020.1		2020.2		2020.3						Expected completion date	Responsible organization
				Qty	%	Qty	%	Qty	%	Qty	%				
1.Update PAPs list and Final Asset Valuation															DOL
1-1	Identification of final PAHs	6 101	HH Business												
1-2	Announcement to Affected people	2	Time												
1-3	Inventory survey and final cost estimation for expropriation	1	Time												
1-4	Consultation meeting times	4	Time												
1-5	Agreement signed by PAHs	6 101	HH Business												
2. Progress of land acquisition															DOL
2-1	Permanent land acquisition Customary land	8,438	m2												
2-2	Permanent land acquisition Leased farm land	4,143	m2												
2-3	Temporary land acquisition Customary land	10,936	m2												
3.Progress of compensation in cash															DOL
3-1	Structure	6	structure												
	Crop/trees	6	HH												
	Compensation for loss of business	101	business												

4. Complain and Grievance Redress N/A Cases			Case												
4-1	Solved cases		Case												
4-2	Unsolved cases		Case												

Record of Complain and Grievance Management

No	Date	Complain and Grievance from PAPs	Solution / Result / Any actions to be taken

Consultation meetings

No	Date	Sector	Nos of Participants	Key agenda and result of discussion

<u>During Construction</u>

No monitoring (No resettlement is needed)

2) Livelihood

Before Construction

Item	Monitoring Results during Report Period	Measures to be Taken	Frequency
Priority in Employment			Monthly
Other employment			Monthly

3) Safety Management (Health and Occupational Safety)

Safety management plan

<u>Pre-construction phase</u>

	Safety management plan is prepared and submitted	Approved by the Consultant	

Date			

Training programs

No		Date	Training	Agenda	Participant
1					
2					

During Construction

Safety management

Date:

No	item	Result	Remarks
1	Number of meetings organized since the previous monitoring		
2	Safety gear distribution (%)		
3	Keep records of accidents and injuries properly (Yes/No)		
4	Installation of fences, assignment of guards (Yes/No)		

Record of Accidents

No	Date	Details of accidents	Solution / Result / Any actions to be taken

4) Other checklist

Date: Mark: "✔" if mitigation measure is done

No	item	Monitoring Site **	Mitigation measure is done or not	Remarks
1	Communities get the information on the construction schedule			
2	Communities know get the information of traffic management			
3	Installation of signboard			
4				

5) Record of Complains

No	Date	Complains	Solution / Result / Any actions to be taken