# F. ON-RAMP BRIDGE

# COORDINATES OF SUPERSTRUCTURE (1)

## PLAN VIEW S=1:400

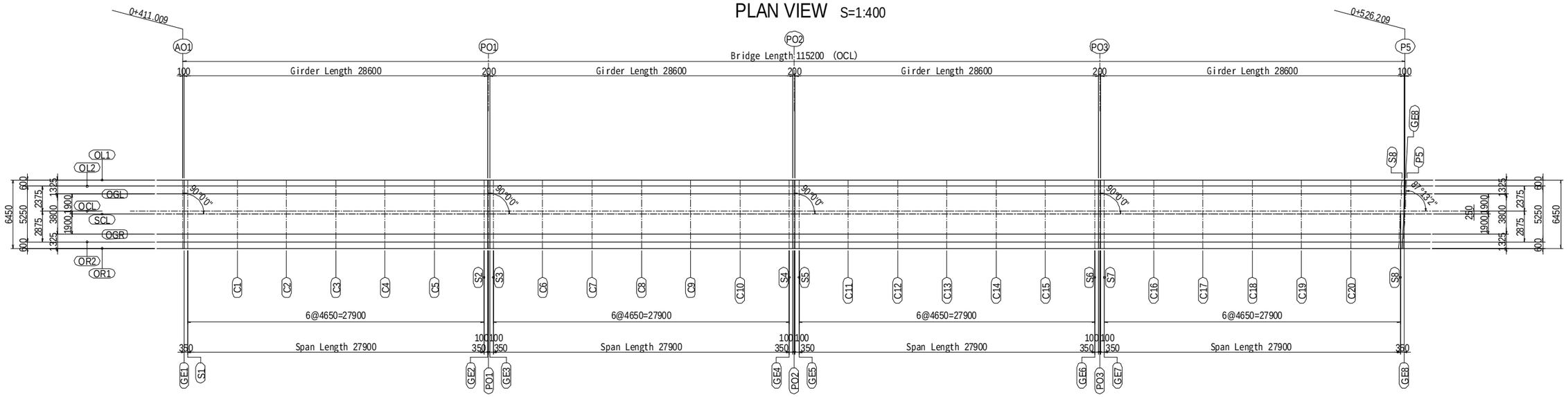


## COORDINATE LIST (UNIT：m)

| | | AO1 | GE1 | S1 | C1 | C2 | C3 | C4 | C5 | S2 | GE2 | PO1 | GE3 | S3 | C6 | C7 | C8 | C9 | C10 | S4 | GE4 | PO2 | GE5 | S5 | C11 | C12 | C13 | C14 | C15 |
|---|---|---|---|---|---|---|---|---|---|---|---|---|---|---|---|---|---|---|---|---|---|---|---|---|---|---|---|---|---|
| OL1 | X | 0.0000 | 0.1000 | 0.4500 | 5.1000 | 9.7500 | 14.4000 | 19.0500 | 23.7000 | 28.3500 | 28.7000 | 28.8000 | 28.9000 | 29.2500 | 33.9000 | 38.5500 | 43.2000 | 47.8500 | 52.5000 | 57.1500 | 57.5000 | 57.6000 | 57.7000 | 58.0500 | 62.7000 | 67.3500 | 72.0000 | 76.6500 | 81.3000 |
| | Y | 2.9750 | 2.9750 | 2.9750 | 2.9750 | 2.9750 | 2.9750 | 2.9750 | 2.9750 | 2.9750 | 2.9750 | 2.9750 | 2.9750 | 2.9750 | 2.9750 | 2.9750 | 2.9750 | 2.9750 | 2.9750 | 2.9750 | 2.9750 | 2.9750 | 2.9750 | 2.9750 | 2.9750 | 2.9750 | 2.9750 | 2.9750 | 2.9750 |
| | Z | 9.7491 | 9.7546 | 9.7738 | 10.0286 | 10.2834 | 10.5381 | 10.7929 | 11.0477 | 11.3025 | 11.3217 | 11.3271 | 11.3326 | 11.3518 | 11.6066 | 11.8614 | 12.1161 | 12.3709 | 12.6223 | 12.8623 | 12.8799 | 12.8849 | 12.8899 | 12.9073 | 13.1332 | 13.3472 | 13.5493 | 13.7396 | 13.9182 |
| OL2 | X | 0.0000 | 0.1000 | 0.4500 | 5.1000 | 9.7500 | 14.4000 | 19.0500 | 23.7000 | 28.3500 | 28.7000 | 28.8000 | 28.9000 | 29.2500 | 33.9000 | 38.5500 | 43.2000 | 47.8500 | 52.5000 | 57.1500 | 57.5000 | 57.6000 | 57.7000 | 58.0500 | 62.7000 | 67.3500 | 72.0000 | 76.6500 | 81.3000 |
| | Y | 2.3750 | 2.3750 | 2.3750 | 2.3750 | 2.3750 | 2.3750 | 2.3750 | 2.3750 | 2.3750 | 2.3750 | 2.3750 | 2.3750 | 2.3750 | 2.3750 | 2.3750 | 2.3750 | 2.3750 | 2.3750 | 2.3750 | 2.3750 | 2.3750 | 2.3750 | 2.3750 | 2.3750 | 2.3750 | 2.3750 | 2.3750 | 2.3750 |
| | Z | 9.4991 | 9.5046 | 9.5238 | 9.7786 | 10.0334 | 10.2881 | 10.5429 | 10.7977 | 11.0525 | 11.0717 | 11.0771 | 11.0826 | 11.1018 | 11.3566 | 11.6114 | 11.8661 | 12.1209 | 12.3723 | 12.6123 | 12.6299 | 12.6349 | 12.6399 | 12.6573 | 12.8832 | 13.0972 | 13.2993 | 13.4896 | 13.6682 |
| OGL | X | 0.0000 | 0.1000 | 0.4500 | 5.1000 | 9.7500 | 14.4000 | 19.0500 | 23.7000 | 28.3500 | 28.7000 | 28.8000 | 28.9000 | 29.2500 | 33.9000 | 38.5500 | 43.2000 | 47.8500 | 52.5000 | 57.1500 | 57.5000 | 57.6000 | 57.7000 | 58.0500 | 62.7000 | 67.3500 | 72.0000 | 76.6500 | 81.3000 |
| | Y | 1.6500 | 1.6500 | 1.6500 | 1.6500 | 1.6500 | 1.6500 | 1.6500 | 1.6500 | 1.6500 | 1.6500 | 1.6500 | 1.6500 | 1.6500 | 1.6500 | 1.6500 | 1.6500 | 1.6500 | 1.6500 | 1.6500 | 1.6500 | 1.6500 | 1.6500 | 1.6500 | 1.6500 | 1.6500 | 1.6500 | 1.6500 | 1.6500 |
| | Z | 9.4846 | 9.4901 | 9.5093 | 9.7641 | 10.0189 | 10.2736 | 10.5284 | 10.7832 | 11.0380 | 11.0572 | 11.0626 | 11.0681 | 11.0873 | 11.3421 | 11.5969 | 11.8516 | 12.1064 | 12.3578 | 12.5978 | 12.6154 | 12.6204 | 12.6254 | 12.6428 | 12.8687 | 13.0827 | 13.2848 | 13.4751 | 13.6537 |
| OCL | X | 0.0000 | 0.1000 | 0.4500 | 5.1000 | 9.7500 | 14.4000 | 19.0500 | 23.7000 | 28.3500 | 28.7000 | 28.8000 | 28.9000 | 29.2500 | 33.9000 | 38.5500 | 43.2000 | 47.8500 | 52.5000 | 57.1500 | 57.5000 | 57.6000 | 57.7000 | 58.0500 | 62.7000 | 67.3500 | 72.0000 | 76.6500 | 81.3000 |
| | Y | 0.0000 | -0.0000 | -0.0000 | -0.0000 | -0.0000 | -0.0000 | -0.0000 | -0.0000 | -0.0000 | -0.0000 | -0.0000 | -0.0000 | -0.0000 | -0.0000 | -0.0000 | -0.0000 | 0.0000 | 0.0000 | -0.0000 | -0.0000 | -0.0000 | -0.0000 | -0.0000 | -0.0000 | -0.0000 | -0.0000 | -0.0000 | -0.0000 |
| | Z | 9.4516 | 9.4571 | 9.4763 | 9.7311 | 9.9859 | 10.2406 | 10.4954 | 10.7502 | 11.0050 | 11.0242 | 11.0296 | 11.0351 | 11.0543 | 11.3091 | 11.5639 | 11.8186 | 12.0734 | 12.3248 | 12.5648 | 12.5824 | 12.5874 | 12.5924 | 12.6098 | 12.8357 | 13.0497 | 13.2518 | 13.4421 | 13.6207 |
| SCL | X | 0.0000 | 0.1000 | 0.4500 | 5.1000 | 9.7500 | 14.4000 | 19.0500 | 23.7000 | 28.3500 | 28.7000 | 28.8000 | 28.9000 | 29.2500 | 33.9000 | 38.5500 | 43.2000 | 47.8500 | 52.5000 | 57.1500 | 57.5000 | 57.6000 | 57.7000 | 58.0500 | 62.7000 | 67.3500 | 72.0000 | 76.6500 | 81.3000 |
| | Y | -0.2500 | -0.2500 | -0.2500 | -0.2500 | -0.2500 | -0.2500 | -0.2500 | -0.2500 | -0.2500 | -0.2500 | -0.2500 | -0.2500 | -0.2500 | -0.2500 | -0.2500 | -0.2500 | -0.2500 | -0.2500 | -0.2500 | -0.2500 | -0.2500 | -0.2500 | -0.2500 | -0.2500 | -0.2500 | -0.2500 | -0.2500 | -0.2500 |
| | Z | 9.4466 | 9.4521 | 9.4713 | 9.7261 | 9.9809 | 10.2356 | 10.4904 | 10.7452 | 11.0000 | 11.0192 | 11.0246 | 11.0301 | 11.0493 | 11.3041 | 11.5589 | 11.8136 | 12.0684 | 12.3198 | 12.5598 | 12.5774 | 12.5824 | 12.5874 | 12.6048 | 12.8307 | 13.0447 | 13.2468 | 13.4371 | 13.6157 |
| OGR | X | 0.0000 | 0.1000 | 0.4500 | 5.1000 | 9.7500 | 14.4000 | 19.0500 | 23.7000 | 28.3500 | 28.7000 | 28.8000 | 28.9000 | 29.2500 | 33.9000 | 38.5500 | 43.2000 | 47.8500 | 52.5000 | 57.1500 | 57.5000 | 57.6000 | 57.7000 | 58.0500 | 62.7000 | 67.3500 | 72.0000 | 76.6500 | 81.3000 |
| | Y | -2.1500 | -2.1500 | -2.1500 | -2.1500 | -2.1500 | -2.1500 | -2.1500 | -2.1500 | -2.1500 | -2.1500 | -2.1500 | -2.1500 | -2.1500 | -2.1500 | -2.1500 | -2.1500 | -2.1500 | -2.1500 | -2.1500 | -2.1500 | -2.1500 | -2.1500 | -2.1500 | -2.1500 | -2.1500 | -2.1500 | -2.1500 | -2.1500 |
| | Z | 9.4086 | 9.4141 | 9.4333 | 9.6881 | 9.9429 | 10.1976 | 10.4524 | 10.7072 | 10.9620 | 10.9812 | 10.9866 | 10.9921 | 11.0113 | 11.2661 | 11.5209 | 11.7756 | 12.0304 | 12.2818 | 12.5218 | 12.5394 | 12.5444 | 12.5494 | 12.5668 | 12.7927 | 13.0067 | 13.2088 | 13.3991 | 13.5777 |
| OR2 | X | 0.0000 | 0.1000 | 0.4500 | 5.1000 | 9.7500 | 14.4000 | 19.0500 | 23.7000 | 28.3500 | 28.7000 | 28.8000 | 28.9000 | 29.2500 | 33.9000 | 38.5500 | 43.2000 | 47.8500 | 52.5000 | 57.1500 | 57.5000 | 57.6000 | 57.7000 | 58.0500 | 62.7000 | 67.3500 | 72.0000 | 76.6500 | 81.3000 |
| | Y | -2.8750 | -2.8750 | -2.8750 | -2.8750 | -2.8750 | -2.8750 | -2.8750 | -2.8750 | -2.8750 | -2.8750 | -2.8750 | -2.8750 | -2.8750 | -2.8750 | -2.8750 | -2.8750 | -2.8750 | -2.8750 | -2.8750 | -2.8750 | -2.8750 | -2.8750 | -2.8750 | -2.8750 | -2.8750 | -2.8750 | -2.8750 | -2.8750 |
| | Z | 9.3941 | 9.3996 | 9.4188 | 9.6736 | 9.9284 | 10.1831 | 10.4379 | 10.6927 | 10.9475 | 10.9667 | 10.9721 | 10.9776 | 10.9968 | 11.2516 | 11.5064 | 11.7611 | 12.0159 | 12.2673 | 12.5073 | 12.5249 | 12.5299 | 12.5349 | 12.5523 | 12.7782 | 12.9922 | 13.1943 | 13.3846 | 13.5632 |
| OR1 | X | 0.0000 | 0.1000 | 0.4500 | 5.1000 | 9.7500 | 14.4000 | 19.0500 | 23.7000 | 28.3500 | 28.7000 | 28.8000 | 28.9000 | 29.2500 | 33.9000 | 38.5500 | 43.2000 | 47.8500 | 52.5000 | 57.1500 | 57.5000 | 57.6000 | 57.7000 | 58.0500 | 62.7000 | 67.3500 | 72.0000 | 76.6500 | 81.3000 |
| | Y | -3.4750 | -3.4750 | -3.4750 | -3.4750 | -3.4750 | -3.4750 | -3.4750 | -3.4750 | -3.4750 | -3.4750 | -3.4750 | -3.4750 | -3.4750 | -3.4750 | -3.4750 | -3.4750 | -3.4750 | -3.4750 | -3.4750 | -3.4750 | -3.4750 | -3.4750 | -3.4750 | -3.4750 | -3.4750 | -3.4750 | -3.4750 | -3.4750 |
| | Z | 9.6441 | 9.6496 | 9.6688 | 9.9236 | 10.1784 | 10.4331 | 10.6879 | 10.9427 | 11.1975 | 11.2167 | 11.2221 | 11.2276 | 11.2468 | 11.5016 | 11.7564 | 12.0111 | 12.2659 | 12.5173 | 12.7573 | 12.7749 | 12.7799 | 12.7849 | 12.8023 | 13.0282 | 13.2422 | 13.4443 | 13.6346 | 13.8132 |

| PROJECT NAME | FINANCED BY | COUNTERPART | JICA STUDY TEAM |
|---|---|---|---|
| DETAILED DESIGN ON BAGO RIVER BRIDGE CONSTRUCTION PROJECT | JAPAN INTERNATIONAL COOPERATION AGENCY | REPUBLIC OF THE UNION OF MYANMAR MINISTRY OF CONSTRUCTION DEPARTMENT OF BRIDGE | NIPPON KOEI CO., LTD. ORIENTAL CONSULTANTS GLOBAL CO., LTD. METROPOLITAN EXPRESSWAY COMPANY LIMITED CHODAI CO.,LTD. NIPPON ENGINEERING CONSULTANTS CO.,LTD. |

| | NAME | SIGNATURE | DATE |
|---|---|---|---|
| PREPARED BY | M. OHYAMA | 大山満弘 | 15 Jun.2017 |
| CHECKED BY | T. HAYAKAWA | 早川和邦 | 20 Jun.2017 |
| APPROVED BY | Y. SANO | 佐野裕一 | 21 Jun.2017 |

| DRAWING TITLE | PACKAGE |
|---|---|
| COORDINATES OF SUPERSTRUCTURE (1) | 1 |
| | DWG No. |
| | P1-OR-0001 |

# COORDINATES OF SUPERSTRUCTURE (2)

## COORDINATE LIST (UNIT : m)

| | | S6 | GE6 | PO3 | GE7 | S7 | C16 | C17 | C18 | C19 | C20 | S8 | GE8 | P5 |
|---|---|---|---|---|---|---|---|---|---|---|---|---|---|---|
| OL1 | X | 85.9500 | 86.3000 | 86.4000 | 86.5000 | 86.8500 | 91.5000 | 96.1500 | 100.8000 | 105.4500 | 110.1000 | 114.8946 | 115.2446 | 115.3446 |
| | Y | 2.9750 | 2.9750 | 2.9750 | 2.9750 | 2.9750 | 2.9750 | 2.9750 | 2.9750 | 2.9750 | 2.9750 | 2.9750 | 2.9750 | 2.9750 |
| | Z | 14.0848 | 14.0969 | 14.1003 | 14.1038 | 14.1157 | 14.2683 | 14.4090 | 14.5379 | 14.6550 | 14.7600 | 14.8634 | 14.8711 | 14.8733 |
| OL2 | X | 85.9500 | 86.3000 | 86.4000 | 86.5000 | 86.8500 | 91.5000 | 96.1500 | 100.8000 | 105.4500 | 110.1000 | 114.8654 | 115.2154 | 115.3154 |
| | Y | 2.3750 | 2.3750 | 2.3750 | 2.3750 | 2.3750 | 2.3750 | 2.3750 | 2.3750 | 2.3750 | 2.3750 | 2.3750 | 2.3750 | 2.3750 |
| | Z | 13.8348 | 13.8469 | 13.8503 | 13.8538 | 13.8657 | 14.0183 | 14.1590 | 14.2879 | 14.4050 | 14.5100 | 14.6127 | 14.6204 | 14.6226 |
| OGL | X | 85.9500 | 86.3000 | 86.4000 | 86.5000 | 86.8500 | 91.5000 | 96.1500 | 100.8000 | 105.4500 | 110.1000 | 114.8302 | 115.1802 | 115.2802 |
| | Y | 1.6500 | 1.6500 | 1.6500 | 1.6500 | 1.6500 | 1.6500 | 1.6500 | 1.6500 | 1.6500 | 1.6500 | 1.6500 | 1.6500 | 1.6500 |
| | Z | 13.8203 | 13.8324 | 13.8358 | 13.8393 | 13.8512 | 14.0038 | 14.1445 | 14.2734 | 14.3905 | 14.4957 | 14.5982 | 14.6059 | 14.6081 |
| OCL | X | 85.9500 | 86.3000 | 86.4000 | 86.5000 | 86.8500 | 91.5000 | 96.1500 | 100.8000 | 105.4500 | 110.1000 | 114.7500 | 115.1000 | 115.2000 |
| | Y | -0.0000 | 0.0000 | 0.0000 | -0.0000 | 0.0000 | 0.0000 | -0.0000 | -0.0000 | -0.0000 | -0.0000 | -0.0000 | -0.0000 | -0.0000 |
| | Z | 13.7873 | 13.7994 | 13.8028 | 13.8063 | 13.8182 | 13.9708 | 14.1115 | 14.2404 | 14.3575 | 14.4630 | 14.5652 | 14.5729 | 14.5751 |
| SCL | X | 85.9500 | 86.3000 | 86.4000 | 86.5000 | 86.8500 | 91.5000 | 96.1500 | 100.8000 | 105.4500 | 110.1000 | 114.7378 | 115.0878 | 115.1878 |
| | Y | -0.2500 | -0.2500 | -0.2500 | -0.2500 | -0.2500 | -0.2500 | -0.2500 | -0.2500 | -0.2500 | -0.2500 | -0.2500 | -0.2500 | -0.2500 |
| | Z | 13.7823 | 13.7944 | 13.7978 | 13.8013 | 13.8132 | 13.9658 | 14.1065 | 14.2354 | 14.3525 | 14.4581 | 14.5602 | 14.5679 | 14.5701 |
| OGR | X | 85.9500 | 86.3000 | 86.4000 | 86.5000 | 86.8500 | 91.5000 | 96.1500 | 100.8000 | 105.4500 | 110.1000 | 114.6455 | 114.9955 | 115.0955 |
| | Y | -2.1500 | -2.1500 | -2.1500 | -2.1500 | -2.1500 | -2.1500 | -2.1500 | -2.1500 | -2.1500 | -2.1500 | -2.1500 | -2.1500 | -2.1500 |
| | Z | 13.7443 | 13.7564 | 13.7598 | 13.7633 | 13.7752 | 13.9278 | 14.0685 | 14.1974 | 14.3145 | 14.4205 | 14.5221 | 14.5298 | 14.5320 |
| OR2 | X | 85.9500 | 86.3000 | 86.4000 | 86.5000 | 86.8500 | 91.5000 | 96.1500 | 100.8000 | 105.4500 | 110.1000 | 114.6103 | 114.9603 | 115.0603 |
| | Y | -2.8750 | -2.8750 | -2.8750 | -2.8750 | -2.8750 | -2.8750 | -2.8750 | -2.8750 | -2.8750 | -2.8750 | -2.8750 | -2.8750 | -2.8750 |
| | Z | 13.7298 | 13.7419 | 13.7453 | 13.7488 | 13.7607 | 13.9133 | 14.0540 | 14.1829 | 14.3000 | 14.4062 | 14.5076 | 14.5153 | 14.5175 |
| OR1 | X | 85.9500 | 86.3000 | 86.4000 | 86.5000 | 86.8500 | 91.5000 | 96.1500 | 100.8000 | 105.4500 | 110.1000 | 114.5811 | 114.9311 | 115.0311 |
| | Y | -3.4750 | -3.4750 | -3.4750 | -3.4750 | -3.4750 | -3.4750 | -3.4750 | -3.4750 | -3.4750 | -3.4750 | -3.4750 | -3.4750 | -3.4750 |
| | Z | 13.9798 | 13.9919 | 13.9953 | 13.9988 | 14.0107 | 14.1633 | 14.3040 | 14.4329 | 14.5500 | 14.6562 | 14.7570 | 14.7647 | 14.7669 |

## CROSS SECTIONS S=1:100

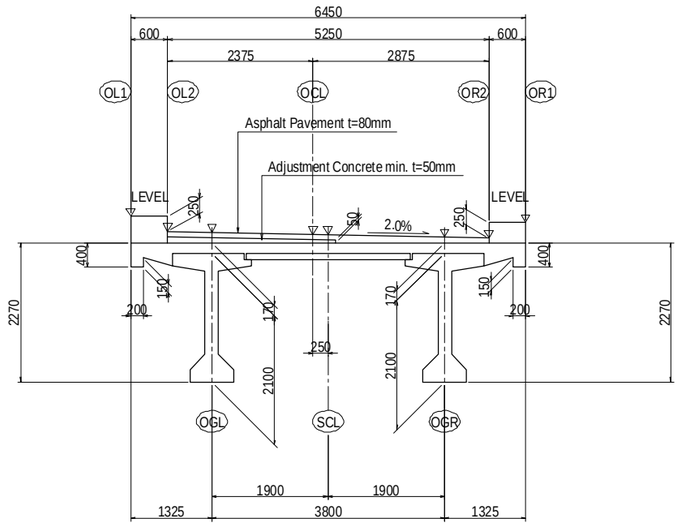


## HRIZONTAL ALIGNMENT

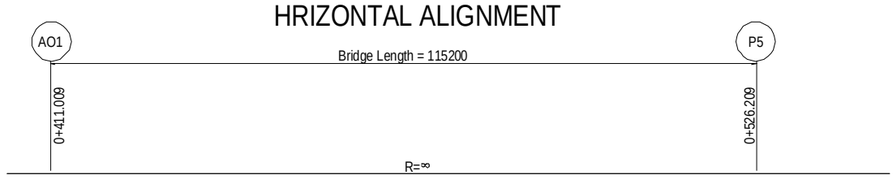


## SUPER ELAVATION

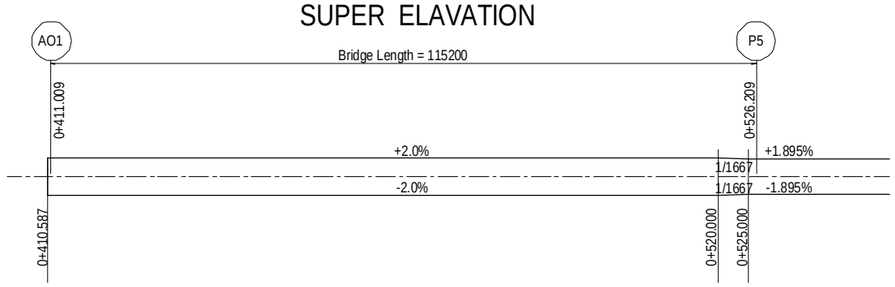


## VERTICAL ALIGNMENT

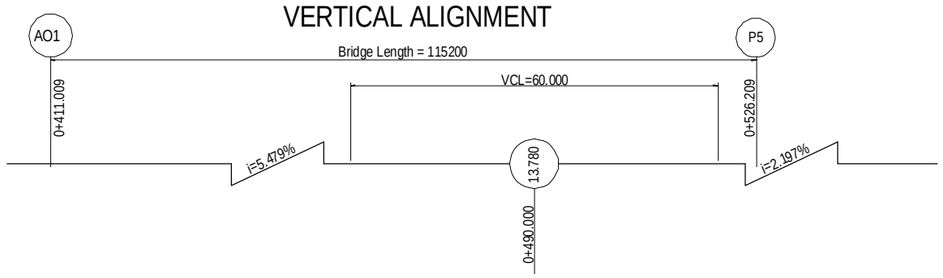


## COORDINATE SYSTEM

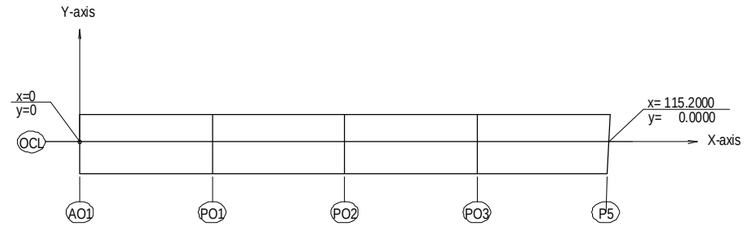


- A line connecting the intersection of road center line OCL and AO1 and P5 in X-axis.
- Intersection Point of AO1 and X-axis(0.000,0.000).
- Y-axis is perpendicular to X-axis through(0.000,0.000).

| PROJECT NAME | FINANCED BY | COUNTERPART | JICA STUDY TEAM |
|---|---|---|---|
| DETAILED DESIGN ON BAGO RIVER BRIDGE CONSTRUCTION PROJECT | JAPAN INTERNATIONAL COOPERATION AGENCY | REPUBLIC OF THE UNION OF MYANMAR MINISTRY OF CONSTRUCTION DEPARTMENT OF BRIDGE | NIPPON KOEI CO., LTD. ORIENTAL CONSULTANTS GLOBAL CO., LTD. METROPOLITAN EXPRESSWAY COMPANY LIMITED CHODAI CO.,LTD. NIPPON ENGINEERING CONSULTANTS CO.,LTD. |

| | NAME | SIGNATURE | DATE | DRAWING TITLE | PACKAGE |
|---|---|---|---|---|---|
| PREPARED BY | M. OHYAMA | 大山満弘 | 15 Jun.2017 | COORDINATES OF SUPERSTRUCTURE (2) | 1 |
| CHECKED BY | T. HAYAKAWA | 早川和彦 | 20 Jun.2017 | | DWG No. |
| APPROVED BY | Y. SANO | 佐野裕一 | 21 Jun.2017 | | P1-OR-0002 |

# COORDINATES OF SUPERSTRUCTURE (3)

## STRUCTURE ELEVATION

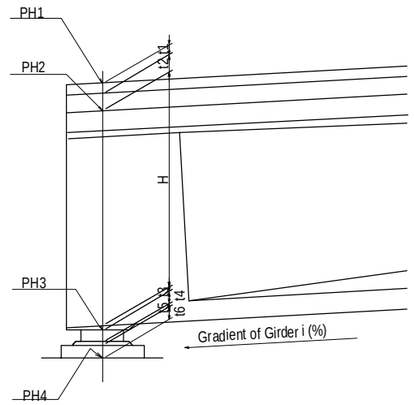


## LIST OF STRUCTURE HEIGHT

| | | | AO1 | | PO1 | | | | PO2 | | | | PO3 | | | | P5 | |
|---|---|---|---|---|---|---|---|---|---|---|---|---|---|---|---|---|---|---|
| | | | | | AO1 side | | PO2 side | | PO1 side | | PO3 side | | PO2 side | | P5 side | | | |
| | | | S1 | | S2 | | S3 | | S4 | | S5 | | S6 | | S7 | | S8 | |
| | | | G1 | G2 | G1 | G2 | G1 | G2 | G1 | G2 | G1 | G2 | G1 | G2 | G1 | G2 | G1 | G2 |
| Gradient of Girder | i | % | 5.479 | | | | 5.409 | | | | 4.220 | | | | 2.694 | | | |
| Road Plan Elevation | PH1 | m | 9.5093 | 9.4333 | 11.0380 | 10.9620 | 11.0873 | 11.0113 | 12.5978 | 12.5218 | 12.6428 | 12.5668 | 13.8203 | 13.7443 | 13.8512 | 13.7752 | 14.5982 | 14.5221 |
| Pavement Thickness | t1 | m | 0.1705 | 0.0945 | 0.1705 | 0.0945 | 0.1708 | 0.0948 | 0.1722 | 0.0962 | 0.1740 | 0.0980 | 0.1740 | 0.0980 | 0.1738 | 0.0978 | 0.1669 | 0.0958 |
| RC-Slab Thickness | t2 | m | 0.1700 | 0.1700 | 0.1700 | 0.1700 | 0.1700 | 0.1700 | 0.1700 | 0.1700 | 0.1700 | 0.1700 | 0.1700 | 0.1700 | 0.1700 | 0.1700 | 0.1700 | 0.1700 |
| Top of Girder Elevation | PH2 | m | 9.1688 | 9.1688 | 10.6975 | 10.6975 | 10.7465 | 10.7465 | 12.2556 | 12.2556 | 12.2988 | 12.2988 | 13.4763 | 13.4763 | 13.5074 | 13.5074 | 14.2613 | 14.2563 |
| Girder Height | H | m | 2.1031 | 2.1031 | 2.1031 | 2.1031 | 2.1031 | 2.1031 | 2.1031 | 2.1031 | 2.1019 | 2.1019 | 2.1019 | 2.1019 | 2.1008 | 2.1008 | 2.1008 | 2.1008 |
| Adjustment Layer | t3 | m | 0.0450 | 0.0450 | 0.0450 | 0.0450 | 0.0450 | 0.0450 | 0.0450 | 0.0450 | 0.0450 | 0.0450 | 0.0450 | 0.0450 | 0.0400 | 0.0400 | 0.0400 | 0.0400 |
| Top of Bearing Support | PH3 | m | 7.0207 | 7.0207 | 8.5494 | 8.5494 | 8.5984 | 8.5984 | 10.1075 | 10.1075 | 10.1519 | 10.1519 | 11.3294 | 11.3294 | 11.3666 | 11.3666 | 12.1205 | 12.1155 |
| Bearing Thickness | t4 | m | 0.1116 | 0.1116 | 0.0884 | 0.0884 | 0.0884 | 0.0884 | 0.0884 | 0.0884 | 0.0884 | 0.0884 | 0.0884 | 0.0884 | 0.0884 | 0.0884 | 0.1348 | 0.1348 |
| Leveling Thickness | t5 | m | 0.0340 | 0.0340 | 0.0380 | 0.0380 | 0.0490 | 0.0490 | 0.0370 | 0.0370 | 0.0440 | 0.0440 | 0.0390 | 0.0390 | 0.0380 | 0.0380 | 0.0370 | 0.0320 |
| Base Concrete Thickness | t6 | m | 0.0000 | 0.0000 | 0.1000 | 0.1000 | 0.1200 | 0.1200 | 0.1000 | 0.1000 | 0.1200 | 0.1200 | 0.1000 | 0.1000 | 0.1200 | 0.1200 | 0.0000 | 0.0000 |
| Top of Substructure Elevation | PH4 | m | 6.8751 | 6.8751 | 8.3230 | 8.3230 | 8.3410 | 8.3410 | 9.8821 | 9.8821 | 9.8995 | 9.8995 | 11.1020 | 11.1020 | 11.1202 | 11.1202 | 11.9487 | 11.9487 |

# GENERAL VIEW OF SUPERSTRUCTRE FOR ON-RAMP (1) S=1:200

## SIDE ELEVATION

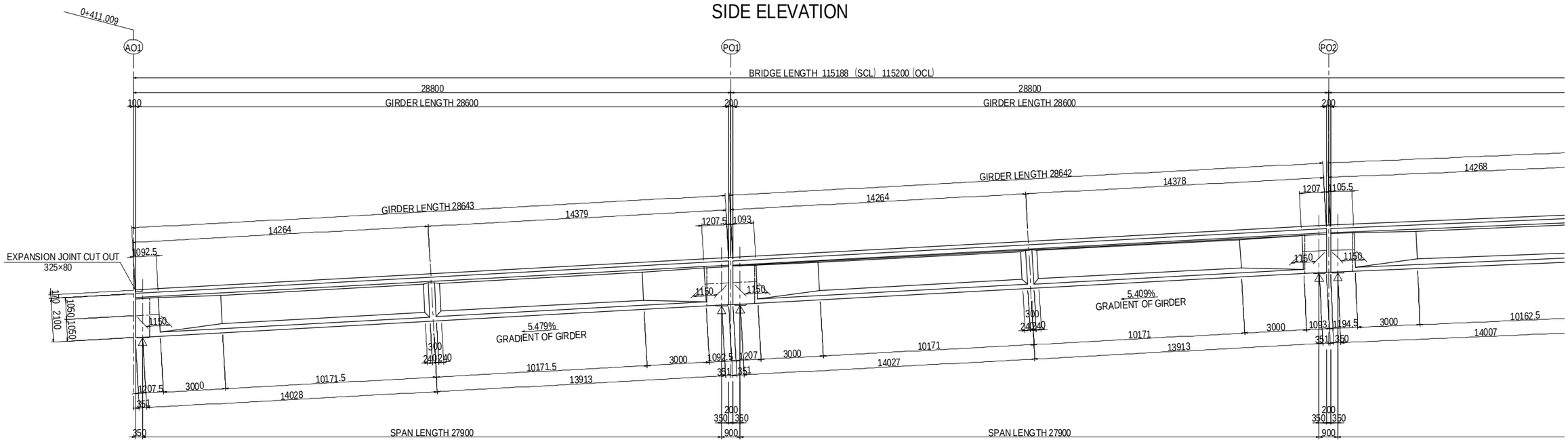


## PLAN VIEW

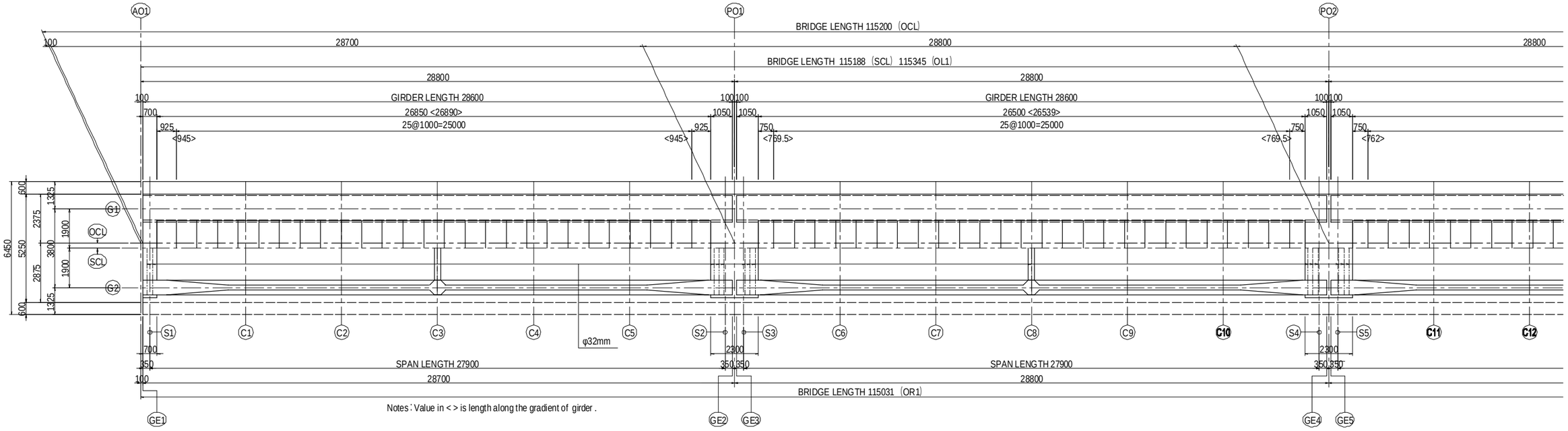


Notes : Value in < > is length along the gradient of girder .

| PROJECT NAME | FINANCED BY | COUNTERPART | JICA STUDY TEAM |
|---|---|---|---|
| DETAILED DESIGN ON BAGO RIVER BRIDGE CONSTRUCTION PROJECT | JAPAN INTERNATIONAL COOPERATION AGENCY | REPUBLIC OF THE UNION OF MYANMAR MINISTRY OF CONSTRUCTION DEPARTMENT OF BRIDGE | NIPPON KOEI CO., LTD. ORIENTAL CONSULTANTS GLOBAL CO., LTD. METROPOLITAN EXPRESSWAY COMPANY LIMITED CHODAI CO.,LTD. NIPPON ENGINEERING CONSULTANTS CO.,LTD. |

| | NAME | SIGNATURE | DATE |
|---|---|---|---|
| PREPARED BY | M. OHYAMA | 大山満弘 | 15 Jun.2017 |
| CHECKED BY | T. HAYAKAWA | 早川知彦 | 20 Jun.2017 |
| APPROVED BY | Y. SANO | 佐野雅一 | 21 Jun.2017 |

| DRAWING TITLE | PACKAGE |
|---|---|
| GENERAL VIEW OF SUPERSTRUCTURE FOR ON-RAMP (1) | 1 |
| | DWG No. |
| | P1-OR-1001 |

# GENERAL VIEW OF SUPERSTRUCTRE FOR ON-RAMP (2)

S=1:200

## SIDE ELEVATION

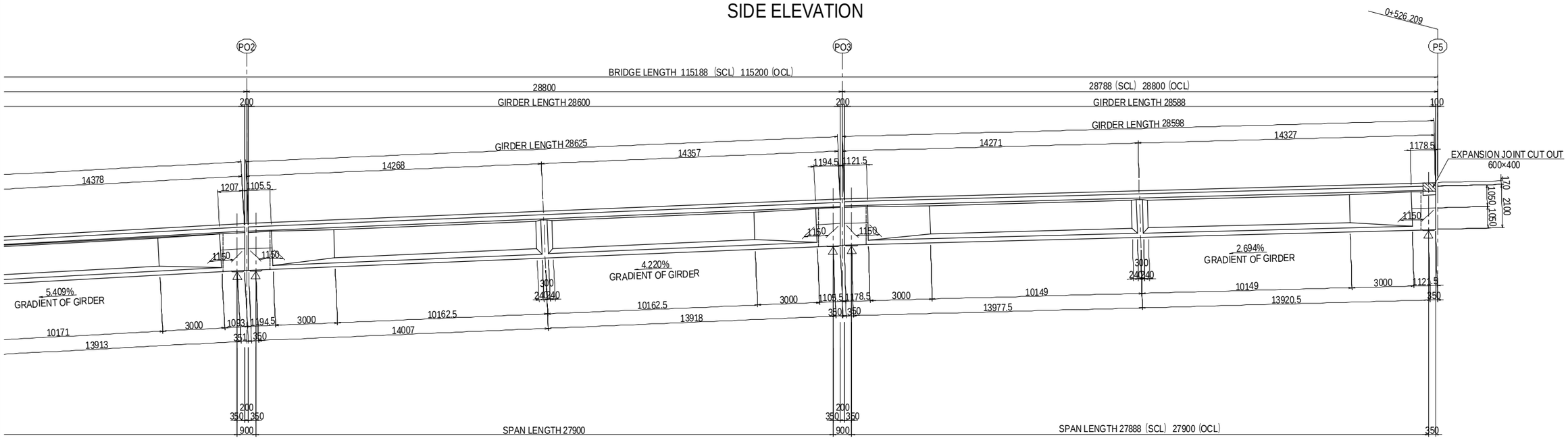


## PLAN VIEW

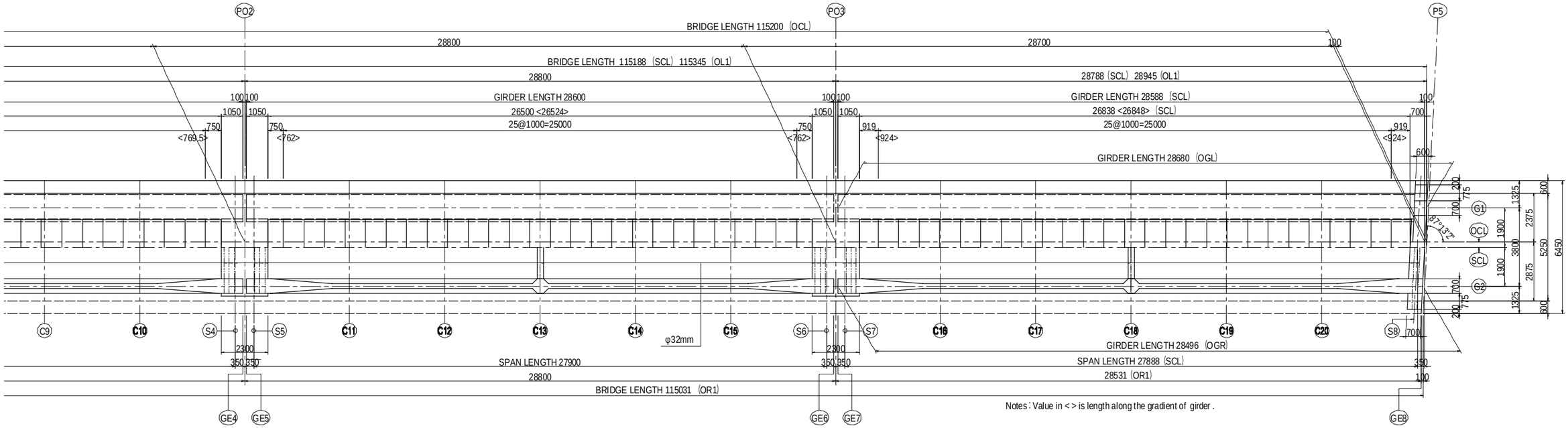


Notes : Value in < > is length along the gradient of girder .

| PROJECT NAME | FINANCED BY | COUNTERPART | JICA STUDY TEAM |
|---|---|---|---|
| DETAILED DESIGN ON BAGO RIVER BRIDGE CONSTRUCTION PROJECT | JAPAN INTERNATIONAL COOPERATION AGENCY | REPUBLIC OF THE UNION OF MYANMAR MINISTRY OF CONSTRUCTION DEPARTMENT OF BRIDGE | NIPPON KOEI CO., LTD. ORIENTAL CONSULTANTS GLOBAL CO., LTD. METROPOLITAN EXPRESSWAY COMPANY LIMITED CHODAI CO.,LTD. NIPPON ENGINEERING CONSULTANTS CO.,LTD. |

| | NAME | SIGNATURE | DATE |
|---|---|---|---|
| PREPARED BY | M. OHYAMA | 大山満弘 | 15 Jun.2017 |
| CHECKED BY | T. HAYAKAWA | 早川知邦 | 20 Jun.2017 |
| APPROVED BY | Y. SANO | 佐野雄一 | 21 Jun.2017 |

| DRAWING TITLE | PACKAGE |
|---|---|
| GENERAL VIEW OF SUPERSTRUCTURE FOR ON-RAMP (2) | 1 |
| | DWG No. |
| | P1-OR-1002 |

# GENERAL VIEW OF SUPERSTRUCTURE FOR ON-RAMP (3)

## CROSS SECTIONS S=1:100

### AT AO1 (GE1)

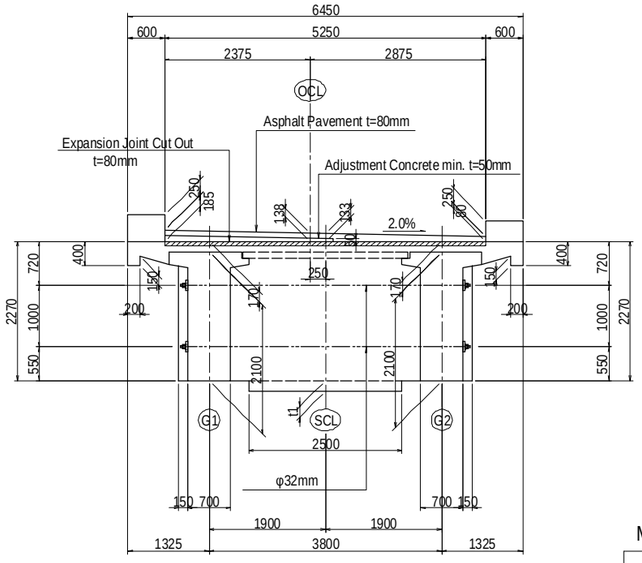


### AT CROSS BEAM SECTION (PO1)

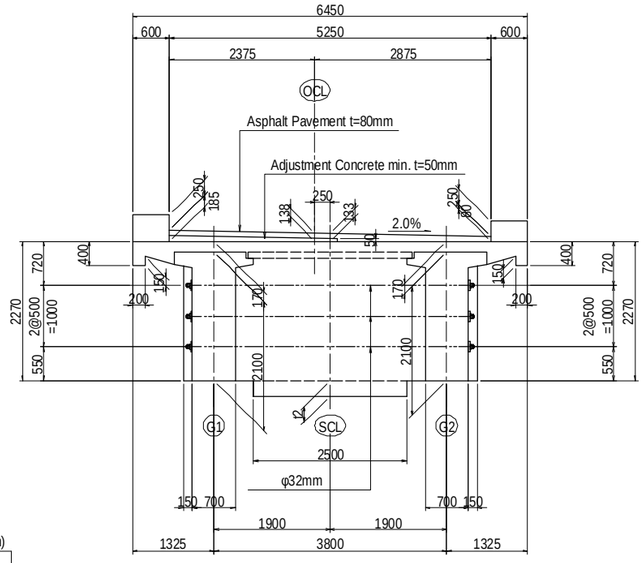


MEMBER DIMENSIONS (mm)

| | AO1 | P01 | P02 | P03 | P5 | |
|---|---|---|---|---|---|---|
| t1 | 171 | — | — | — | 189 | on bearing support line |
| t2 | — | 267 | 263 | 259 | — | on center of pier |

### AT INTERMEDIATE CROSS BEAM SECTION (C3)

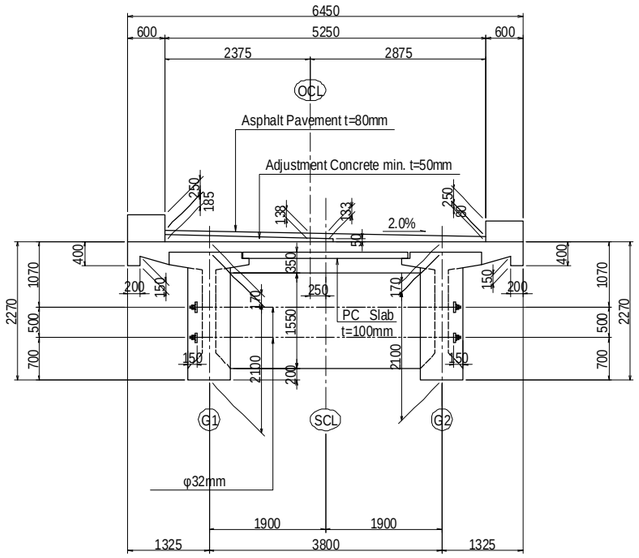


### AT P5 (GE8)

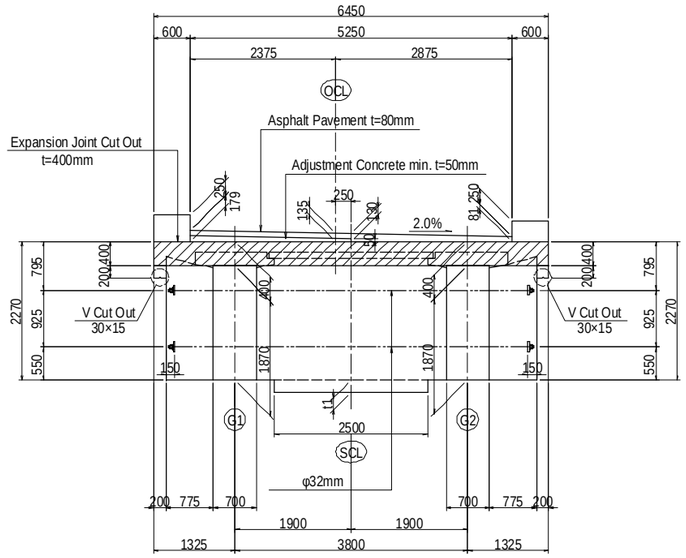


Notes:
- Unless otherwise indicated in drawing, transverse PC bars shall be tensioned from one side alternately.
- Reinforcement for tendon anchorage such as grid rebar shall be arranged sufficiently.
- 800 N/mm2 is assumed as jacking force of φ32mm in design stage. Jacking force considering jacking sequence shall be indicated on shop drawings and shall be approved by Engineer.

| PROJECT NAME | FINANCED BY | COUNTERPART | JICA STUDY TEAM |
|---|---|---|---|
| DETAILED DESIGN ON BAGO RIVER BRIDGE CONSTRUCTION PROJECT | JAPAN INTERNATIONAL COOPERATION AGENCY | REPUBLIC OF THE UNION OF MYANMAR MINISTRY OF CONSTRUCTION DEPARTMENT OF BRIDGE | NIPPON KOEI CO., LTD. ORIENTAL CONSULTANTS GLOBAL CO., LTD. METROPOLITAN EXPRESSWAY COMPANY LIMITED CHODAI CO.,LTD. NIPPON ENGINEERING CONSULTANTS CO.,LTD. |

| | NAME | SIGNATURE | DATE |
|---|---|---|---|
| PREPARED BY | M. OHYAMA | 大山満弘 | 15 Jun.2017 |
| CHECKED BY | T. HAYAKAWA | 早川和彦 | 20 Jun.2017 |
| APPROVED BY | Y. SANO | 佐野裕一 | 21 Jun.2017 |

| DRAWING TITLE | PACKAGE |
|---|---|
| GENERAL VIEW OF SUPERSTRUCTURE FOR ON-RAMP(3) | 1 |
| | DWG No. |
| | P1-OR-1003 |

# GENERAL VIEW OF SUPERSTRUCTURE FOR ON-RAMP (4)

## CROSS SECTIONS S=1:100

STANDARD SECTION

AT (C8)

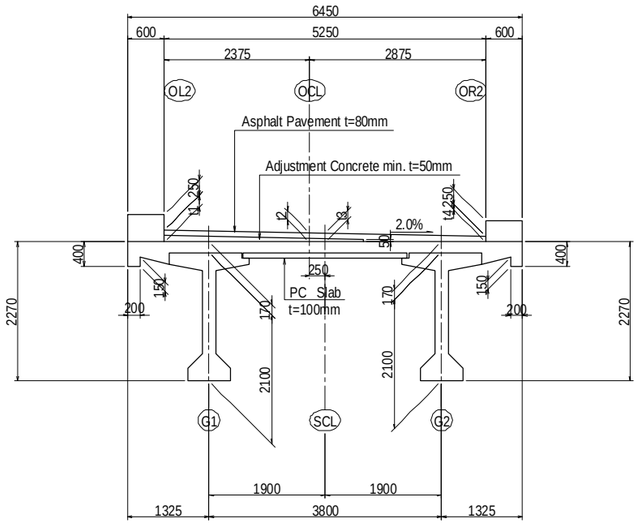


AT (C13)

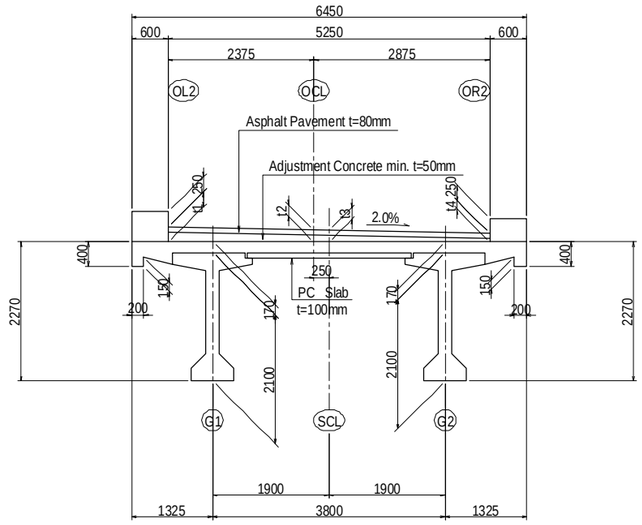


MEMBER DIMENSIONS

(UNIT : mm)

| | | AO1 | GE1 | S1 | C1 | C2 | C3 | C4 | C5 | S2 | GE2 | PO1 | GE3 | S3 | C6 | C7 | C8 | C9 | C10 | S4 | GE4 | PO2 | GE5 | S5 | C11 | C12 | C13 | C14 | C15 | S6 | GE6 |
|---|---|---|---|---|---|---|---|---|---|---|---|---|---|---|---|---|---|---|---|---|---|---|---|---|---|---|---|---|---|---|---|
| OL2 | t1 | 185 | 185 | 185 | 185 | 185 | 185 | 185 | 185 | 185 | 185 | 185 | 185 | 185 | 189 | 192 | 195 | 198 | 198 | 187 | 185 | 185 | 186 | 189 | 218 | 236 | 242 | 236 | 218 | 189 | 186 |
| OCL | t2 | 138 | 138 | 138 | 138 | 138 | 138 | 138 | 138 | 138 | 138 | 138 | 138 | 138 | 141 | 144 | 148 | 151 | 151 | 139 | 138 | 138 | 138 | 141 | 171 | 188 | 194 | 188 | 171 | 141 | 138 |
| SCL | t3 | 133 | 133 | 133 | 133 | 133 | 133 | 133 | 133 | 133 | 133 | 133 | 133 | 133 | 136 | 139 | 143 | 146 | 146 | 134 | 133 | 133 | 133 | 136 | 166 | 183 | 189 | 183 | 166 | 136 | 133 |
| OR2 | t4 | 80 | 80 | 80 | 80 | 80 | 80 | 80 | 80 | 80 | 80 | 80 | 80 | 80 | 84 | 87 | 90 | 93 | 93 | 82 | 80 | 80 | 81 | 84 | 113 | 131 | 137 | 131 | 113 | 84 | 81 |

(UNIT : mm)

| | | PO3 | GE7 | S7 | C16 | C17 | C18 | C19 | C20 | S8 | GE8 | P5 |
|---|---|---|---|---|---|---|---|---|---|---|---|---|
| OL2 | t1 | 185 | 186 | 188 | 216 | 231 | 235 | 226 | 206 | 181 | 179 | 178 |
| OCL | t2 | 138 | 138 | 141 | 168 | 184 | 187 | 179 | 159 | 136 | 134 | 134 |
| SCL | t3 | 133 | 133 | 136 | 163 | 179 | 182 | 174 | 154 | 131 | 130 | 129 |
| OR2 | t4 | 80 | 81 | 83 | 111 | 126 | 130 | 121 | 102 | 82 | 81 | 80 |

## DETAIL OF ADJUSTMENT LAYER S=1:30

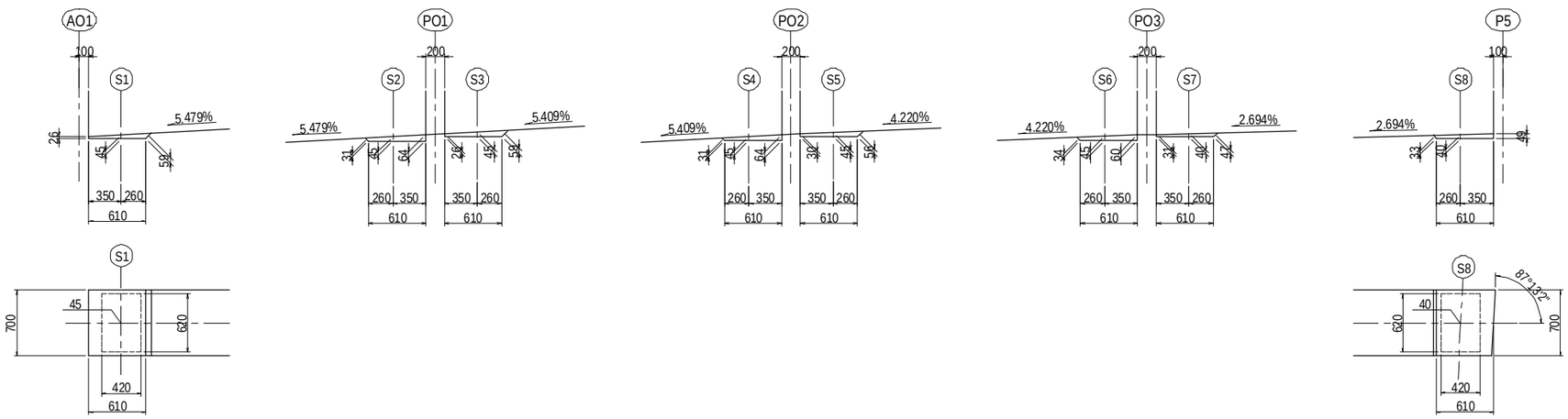


| PROJECT NAME | FINANCED BY | COUNTERPART | JICA STUDY TEAM |
|---|---|---|---|
| DETAILED DESIGN ON BAGO RIVER BRIDGE CONSTRUCTION PROJECT | JAPAN INTERNATIONAL COOPERATION AGENCY | REPUBLIC OF THE UNION OF MYANMAR MINISTRY OF CONSTRUCTION DEPARTMENT OF BRIDGE | NIPPON KOEI CO., LTD. ORIENTAL CONSULTANTS GLOBAL CO., LTD. METROPOLITAN EXPRESSWAY COMPANY LIMITED CHODAI CO.,LTD. NIPPON ENGINEERING CONSULTANTS CO.,LTD. |

| | NAME | SIGNATURE | DATE |
|---|---|---|---|
| PREPARED BY | M. OHYAMA | 大山満弘 | 15 Jun.2017 |
| CHECKED BY | T. HAYAKAWA | 早川知彦 | 20 Jun.2017 |
| APPROVED BY | Y. SANO | 佐野拓一 | 21 Jun.2017 |

| DRAWING TITLE | PACKAGE |
|---|---|
| GENERAL VIEW OF SUPERSTRUCTURE FOR ON-RAMP (4) | 1 |
| | DWG No. |
| | P1-OR-1004 |

# GENERAL VIEW OF SUPERSTRUCTURE FOR ON-RAMP (5)

## CROSS SECTION S=1:30

### TYPICAL SECTION

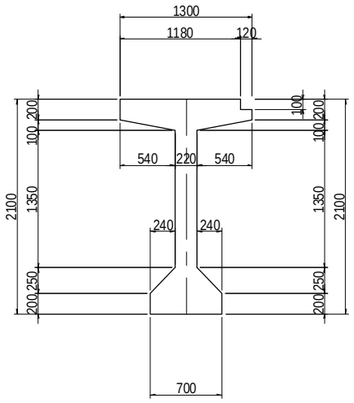


### SUPPORT SECTION

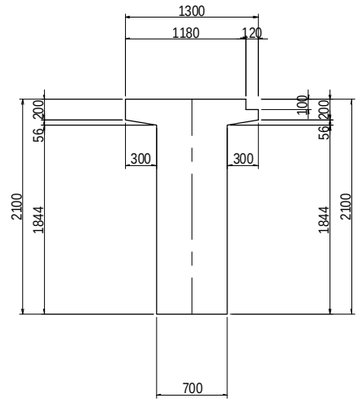


### SUPPORT SECTION (P5)

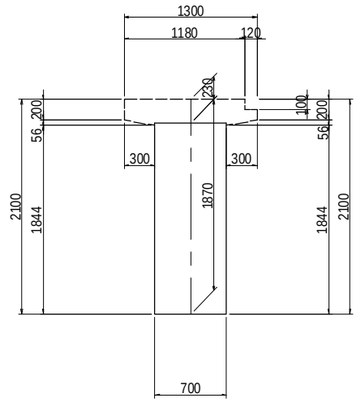


## DETAIL OF CROSS BEAM S=1:50

### CONNECTION PART

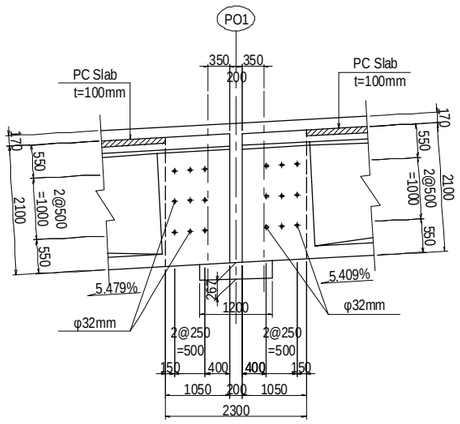


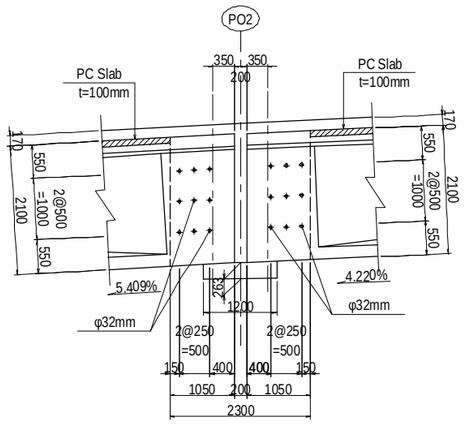


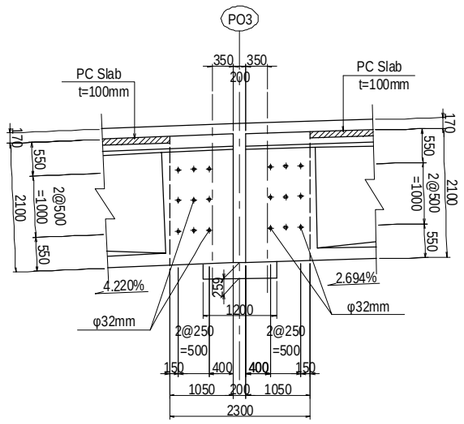


### AO1 END CROSS BEAM

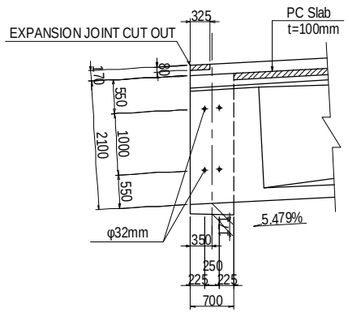


### P5 END CROSS BEAM

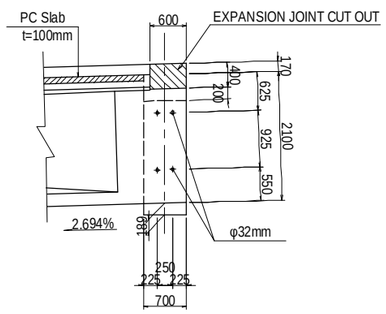


### INTERMEDIATE CROSS BEAM

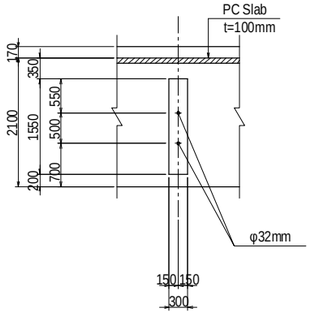


## DESIGN DONDITION

| | |
|---|---|
| ROAD GARDE | Equivalent to CLASS C |
| BRIDGE TYPE | 4 span continuous PC-I girder bridge with composite deck(PC board and RC deck) |
| BRIDGE LENGTH | L = 115.200m |
| SPAN LENGTH | L = 27.900 + 27.900 + 27.900 + 27.900m |
| WIDTH OF THE ROAD | TOTAL : 6.450m<br>L = 0.600 + 0.750 + 3.250 + 1.250 + 0.600m |
| HORIZONTAL ALIGNMENT | R = ∞ |
| LONGITUDINAL SLOPE | 5.479% ↙ ~ 2.197% ↙ |
| SUPERELEVATION | 2.00% ↘ |
| ANGLE OF SKEW | AO1, PO1, PO2, PO3 : 90°00'00" , P5 : 87°13'02" |
| PAVEMENT | ASPHALT PAVEMENT t = 80 mm |
| SLAB | REINFORCED CONCRETE t = 170 mm |
| PLATE | PRESTRESS CONCRETE BOARD t = 100 mm |
| LIVE ROAD | AASHTO HL-93 |
| DESIGN STANDARD | AASHTO LRFD BRIDGE DESIGN 2014(LIVE LOAD)<br>Specifications for highway bridges (Japan Road Association)<br>Part I Common, Part III Concrete Bridges, Part V Seismic Design (April 2012) |

## MATERIALS LIST

(N/mm²)

| CONCRETE | | MAIN GIRDER | CROSS BEAM | PC BOARD | RC SLAB | COUPLING CONCRETE |
|---|---|---|---|---|---|---|
| DESIGN STRENGTH OF CONCRETE | | 40.0 | 30.0 | 40.0 | 30.0 | 30.0 |
| ALLOWABLE FLEXURAL COMPRESSIVE STRESS | IMMEDIATELY AFTER PRESTRESSING | 19.0 | 15.0 | 19.0 | — | — |
| | OTHERS | 14.0 | 11.0 | 14.0 | 10.0 | 10.0 |
| ALLOWABLE FLEXURAL TENSILE STRESS | IMMEDIATELY AFTER PRESTRESSING | -1.5 | -1.2 | -1.5 | — | — |
| | DEAD LOAD | 0.0 | 0.0 | — | — | — |
| | OTHERS | -1.5 | -1.2 | 0.0 | — | — |
| MEAN SHEAR STRESS CONCRETE CAN CARRY | | 0.55 | 0.45 | — | — | — |
| MAXIMUM MEAN CONCRETE SHEAR STRESS | IN CASE WHERE ONLY SHEAR FORCES | 5.3 | 4.0 | — | — | — |
| ALLOWABLE DIAGONAL TENSILE STRESS (DEAD LOAD) | IN CASE WHERE ONLY SHEAR FORCES | -1.0 | -0.8 | — | — | — |
| ALLOWABLE DIAGONAL TENSILE STRESS (DESIGN LOAD) | IN CASE WHERE ONLY SHEAR FORCES | -2.0 | -1.7 | — | — | — |

(N/mm²)

| PC STRAND | | SWPR7BL 12S12.7mm | SBPR930/1080 φ32mm | SWPR7 1S9.3mm |
|---|---|---|---|---|
| TENSILE STRENGTH | | 1850 | 1080 | 1700 |
| YIELD POINT | | 1600 | 980 | 1450 |
| ALLOWABLE TENSILE STRESS | DURING PRESTRESSING | 1440 | 837 | 1305 |
| | IMMEDIATELY AFTER PRESTRESSING | 1295 | 756 | 1190 |
| | UNDER DESIGN LOAD | 1110 | 648 | 1020 |

(N/mm²)

| REINFORCING STEEL | | MAIN GIRDER | CROSS BEAM | RC SLAB | COUPLING CONCRETE |
|---|---|---|---|---|---|
| STEEL TYPE | | SD345 | SD345 | SD345 | SD345 |
| YIELD POINT | | 345 | 345 | 345 | 345 |
| ALLOWABLE TENSILE STRESS | DEAD LOAD | — | — | 100 | 100 |
| | DESIGN LOAD | 180 | 180 | 140 | 160 |

| PROJECT NAME | FINANCED BY | COUNTERPART | JICA STUDY TEAM |
|---|---|---|---|
| DETAILED DESIGN ON BAGO RIVER BRIDGE CONSTRUCTION PROJECT | JAPAN INTERNATIONAL COOPERATION AGENCY | REPUBLIC OF THE UNION OF MYANMAR<br>MINISTRY OF CONSTRUCTION<br>DEPARTMENT OF BRIDGE | NIPPON KOEI CO., LTD.<br>ORIENTAL CONSULTANTS GLOBAL CO., LTD.<br>METROPOLITAN EXPRESSWAY COMPANY LIMITED<br>CHODAI CO.,LTD.<br>NIPPON ENGINEERING CONSULTANTS CO.,LTD. |

| | NAME | SIGNATURE | DATE |
|---|---|---|---|
| PREPARED BY | M. OHYAMA | 大山満弘 | 15 Jun.2017 |
| CHECKED BY | T. HAYAKAWA | 早川知彦 | 20 Jun.2017 |
| APPROVED BY | Y. SANO | 佐野統一 | 21 Jun.2017 |

DRAWING TITLE: GENERAL VIEW OF SUPERSTRUCTURE FOR ON-RAMP (5)

PACKAGE: 1

DWG No.: P1-OR-1005

# TENDON ARRANGEMENT OF PRECAST BEAM FOR ON-RAMP (1)

## SIDE ELEVATION S=1:100

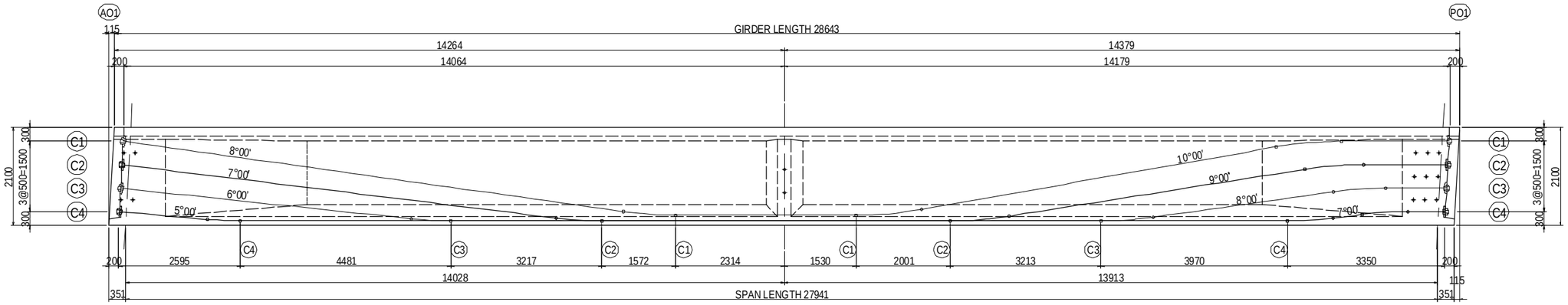


## MEASUREMENT TABLE OF PC TENDON (SWPR7BL 12S12.7mm)

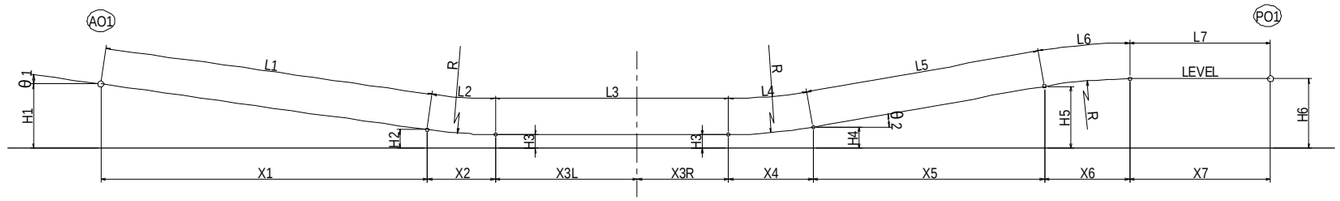


(Unit : mm)

| Cable No | θ1 | θ2 | R | H1 | H2 | H3 | H4 | H5 | H6 | X1 | X2 | X3L | X3R | X4 | X5 | X6 | X7 | L1 | L2 | L3 | L4 | L5 | L6 | L7 | ΣL |
|---|---|---|---|---|---|---|---|---|---|---|---|---|---|---|---|---|---|---|---|---|---|---|---|---|---|
| C1 | 8°00' | 10°00' | 8000 | 1800 | 303 | 225 | 347 | 1678 | 1800 | 10653 | 1113 | 2314 | 1530 | 1389 | 7554 | 1389 | 2300 | 10757 | 1117 | 3845 | 1396 | 7670 | 1396 | 2300 | 28438 |
| C2 | 7°00' | 9°00' | 8000 | 1300 | 165 | 105 | 203 | 1202 | 1300 | 9247 | 975 | 3886 | 3531 | 1251 | 6301 | 1251 | 1800 | 9316 | 977 | 7417 | 1257 | 6380 | 1257 | 1800 | 28361 |
| C3 | 6°00' | 8°00' | 8000 | 800 | 149 | 105 | 183 | 722 | 800 | 6196 | 836 | 7103 | 6744 | 1113 | 3837 | 1113 | 1300 | 6230 | 838 | 13847 | 1117 | 3875 | 1117 | 1300 | 28281 |
| C4 | 5°00' | 7°00' | 8000 | 300 | 135 | 105 | 165 | 240 | 300 | 1881 | 697 | 11584 | 10714 | 975 | 617 | 975 | 800 | 1888 | 698 | 22298 | 977 | 621 | 977 | 800 | 28216 |

## CROSS SECTION S=1:60

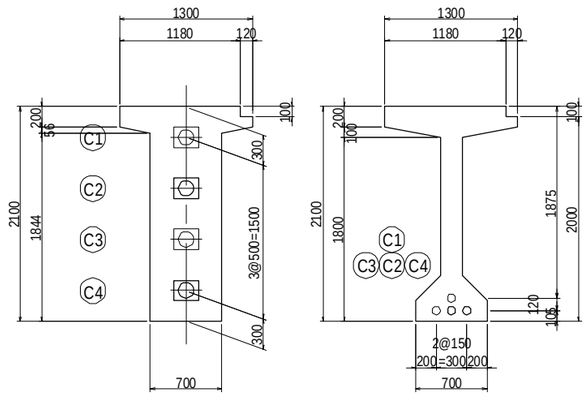


Notes:
- Unless otherwise indicated in drawing, longitudinal PC tendons shall be tensioned from both ends simultaneously.
- Reinforcement for tendon anchorage such as grid rebar shall be arranged sufficiently.
- 1340 N/mm2 is assumed as jacking force of 12S12.7mm tendons in design stage. Jacking force considering jacking sequence shall be indicated on shop drawings and shall be approved by Engineer.

| PROJECT NAME | FINANCED BY | COUNTERPART | JICA STUDY TEAM |
|---|---|---|---|
| DETAILED DESIGN ON BAGO RIVER BRIDGE CONSTRUCTION PROJECT | JAPAN INTERNATIONAL COOPERATION AGENCY | REPUBLIC OF THE UNION OF MYANMAR MINISTRY OF CONSTRUCTION DEPARTMENT OF BRIDGE | NIPPON KOEI CO., LTD. ORIENTAL CONSULTANTS GLOBAL CO., LTD. METROPOLITAN EXPRESSWAY COMPANY LIMITED CHODAI CO.,LTD. NIPPON ENGINEERING CONSULTANTS CO.,LTD. |

| | NAME | SIGNATURE | DATE |
|---|---|---|---|
| PREPARED BY | M. OHYAMA | 大山満弘 | 15 Jun.2017 |
| CHECKED BY | T. HAYAKAWA | 早川知平 | 20 Jun.2017 |
| APPROVED BY | Y. SANO | 佐野雅一 | 21 Jun.2017 |

| DRAWING TITLE | PACKAGE |
|---|---|
| TENDON ARRANGEMENT OF PRECAST BEAM FOR ON-RAMP (1) | 1 |
| | DWG No. |
| | P1-OR-1101 |

# TENDON ARRANGEMENT OF PRECAST BEAM FOR ON-RAMP (2)

## SIDE ELEVATION S=1:100

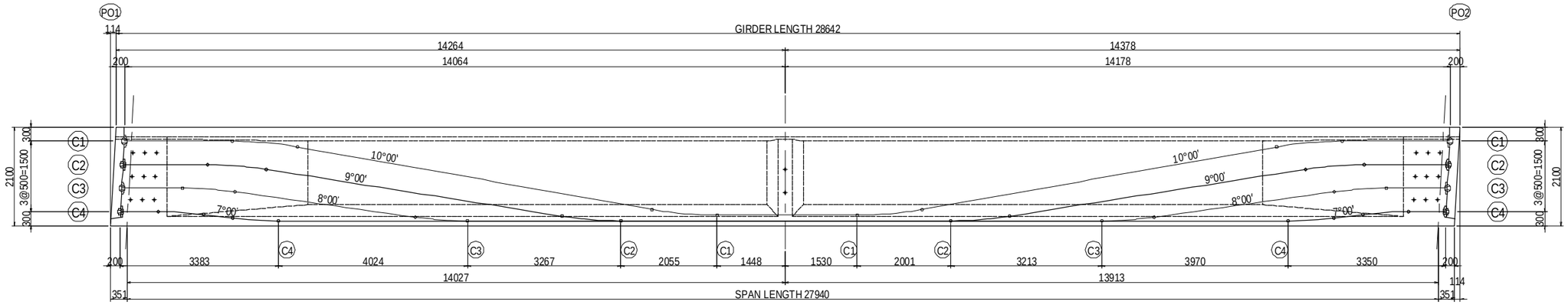


## MEASUREMENT TABLE OF PC TENDON (SWPR7BL 12S12.7mm)

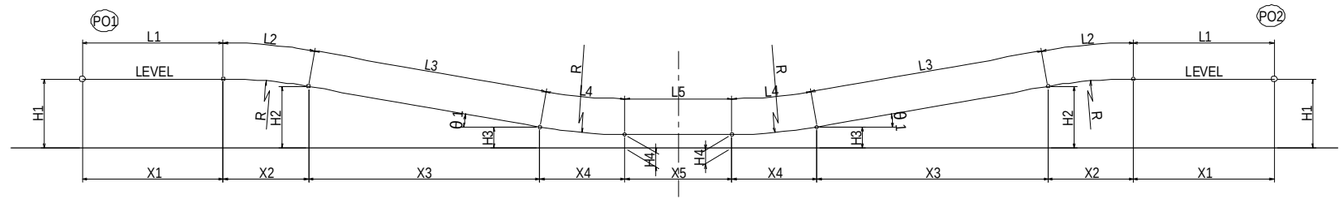


(Unit:mm)

| Cable No | θ1 | R | H1 | H2 | H3 | H4 | X1 | X2 | X3 | X4 | X5 | L1 | L2 | L3 | L4 | L5 | ΣL |
|---|---|---|---|---|---|---|---|---|---|---|---|---|---|---|---|---|---|
| C1 | 10°00' | 8000 | 1800 | 1678 | 347 | 225 | 2300 | 1389 | 7554 | 1389 | 2978 | 2300 | 1396 | 7670 | 1396 | 2978 | 28502 |
| C2 | 9°00' | 8000 | 1300 | 1202 | 203 | 105 | 1800 | 1251 | 6301 | 1251 | 7034 | 1800 | 1257 | 6380 | 1257 | 7034 | 28422 |
| C3 | 8°00' | 8000 | 800 | 722 | 183 | 105 | 1300 | 1113 | 3837 | 1113 | 13514 | 1300 | 1117 | 3875 | 1117 | 13514 | 28332 |
| C4 | 7°00' | 8000 | 300 | 240 | 165 | 105 | 800 | 975 | 617 | 975 | 21509 | 800 | 977 | 621 | 977 | 21509 | 28259 |

## CROSS SECTION S=1:60

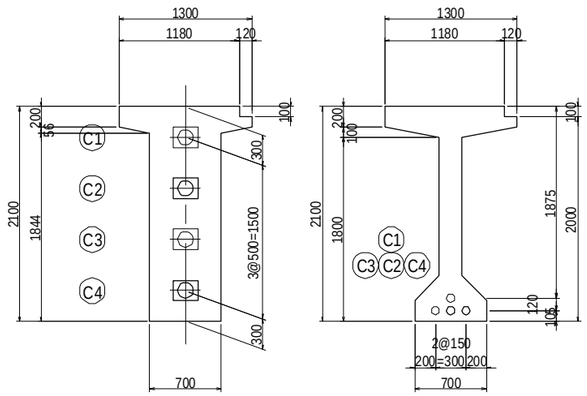


Notes:
- Unless otherwise indicated in drawing, longitudinal PC tendons shall be tensioned from both ends simultaneously.
- Reinforcement for tendon anchorage such as grid rebar shall be arranged sufficiently.
- 1340 N/mm2 is assumed as jacking force of 12S12.7mm tendons in design stage. Jacking force considering jacking sequence shall be indicated on shop drawings and shall be approved by Engineer.

| PROJECT NAME | FINANCED BY | COUNTERPART | JICA STUDY TEAM |
|---|---|---|---|
| DETAILED DESIGN ON BAGO RIVER BRIDGE CONSTRUCTION PROJECT | JAPAN INTERNATIONAL COOPERATION AGENCY | REPUBLIC OF THE UNION OF MYANMAR MINISTRY OF CONSTRUCTION DEPARTMENT OF BRIDGE | NIPPON KOEI CO., LTD. ORIENTAL CONSULTANTS GLOBAL CO., LTD. METROPOLITAN EXPRESSWAY COMPANY LIMITED CHODAI CO.,LTD. NIPPON ENGINEERING CONSULTANTS CO.,LTD. |

| | NAME | SIGNATURE | DATE |
|---|---|---|---|
| PREPARED BY | M. OHYAMA | 大山満弘 | 15 Jun.2017 |
| CHECKED BY | T. HAYAKAWA | 早川知邦 | 20 Jun.2017 |
| APPROVED BY | Y. SANO | 佐野裕一 | 21 Jun.2017 |

| DRAWING TITLE | PACKAGE |
|---|---|
| TENDON ARRANGEMENT OF PRECAST BEAM FOR ON-RAMP (2) | 1 |
| | DWG No. |
| | P1-OR-1102 |

# TENDON ARRANGEMENT OF PRECAST BEAM FOR ON-RAMP (3)

## SIDE ELEVATION S=1:100

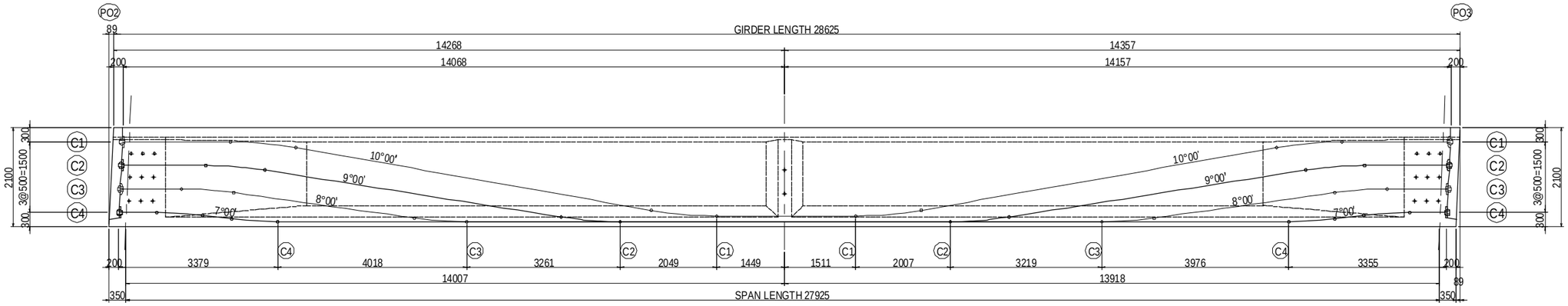


## MEASUREMENT TABLE OF PC TENDON (SWPR7BL 12S12.7mm)

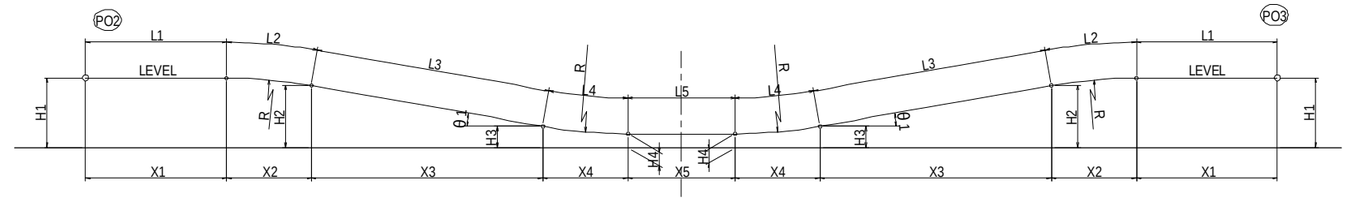


(Unit : mm)

| Cable No | θ1 | R | H1 | H2 | H3 | H4 | X1 | X2 | X3 | X4 | X5 | L1 | L2 | L3 | L4 | L5 | ΣL |
|---|---|---|---|---|---|---|---|---|---|---|---|---|---|---|---|---|---|
| C1 | 10°00' | 8000 | 1800 | 1678 | 347 | 225 | 2300 | 1389 | 7554 | 1389 | 2960 | 2300 | 1396 | 7670 | 1396 | 2960 | 28484 |
| C2 | 9°00' | 8000 | 1300 | 1202 | 203 | 105 | 1800 | 1251 | 6301 | 1251 | 7016 | 1800 | 1257 | 6380 | 1257 | 7016 | 28404 |
| C3 | 8°00' | 8000 | 800 | 722 | 183 | 105 | 1300 | 1113 | 3837 | 1113 | 13496 | 1300 | 1117 | 3875 | 1117 | 13496 | 28314 |
| C4 | 7°00' | 8000 | 300 | 240 | 165 | 105 | 800 | 975 | 617 | 975 | 21491 | 800 | 977 | 621 | 977 | 21491 | 28241 |

## CROSS SECTION S=1:60

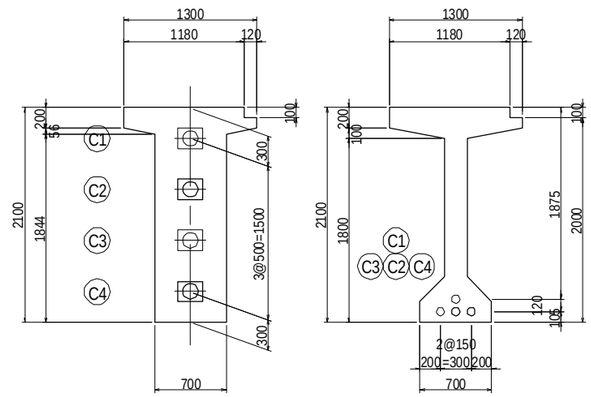


Notes:
- Unless otherwise indicated in drawing, longitudinal PC tendons shall be tensioned from both ends simultaneously.
- Reinforcement for tendon anchorage such as grid rebar shall be arranged sufficiently.
- 1340 N/mm2 is assumed as jacking force of 12S12.7mm tendons in design stage. Jacking force considering jacking sequence shall be indicated on shop drawings and shall be approved by Engineer.

| PROJECT NAME | FINANCED BY | COUNTERPART | JICA STUDY TEAM |
|---|---|---|---|
| DETAILED DESIGN ON BAGO RIVER BRIDGE CONSTRUCTION PROJECT | JAPAN INTERNATIONAL COOPERATION AGENCY | REPUBLIC OF THE UNION OF MYANMAR MINISTRY OF CONSTRUCTION DEPARTMENT OF BRIDGE | NIPPON KOEI CO., LTD. ORIENTAL CONSULTANTS GLOBAL CO., LTD. METROPOLITAN EXPRESSWAY COMPANY LIMITED CHODAI CO.,LTD. NIPPON ENGINEERING CONSULTANTS CO.,LTD. |

| | NAME | SIGNATURE | DATE |
|---|---|---|---|
| PREPARED BY | M. OHYAMA | 大山満弘 | 15 Jun.2017 |
| CHECKED BY | T. HAYAKAWA | 早川和邦 | 20 Jun.2017 |
| APPROVED BY | Y. SANO | 佐野裕一 | 21 Jun.2017 |

| DRAWING TITLE | PACKAGE |
|---|---|
| TENDON ARRANGEMENT OF PRECAST BEAM FOR ON-RAMP (3) | 1 |
| | DWG No. |
| | P1-OR-1103 |

# TENDON ARRANGEMENT OF PRECAST BEAM FOR ON-RAMP (4)

## SIDE ELEVATION S=1:100

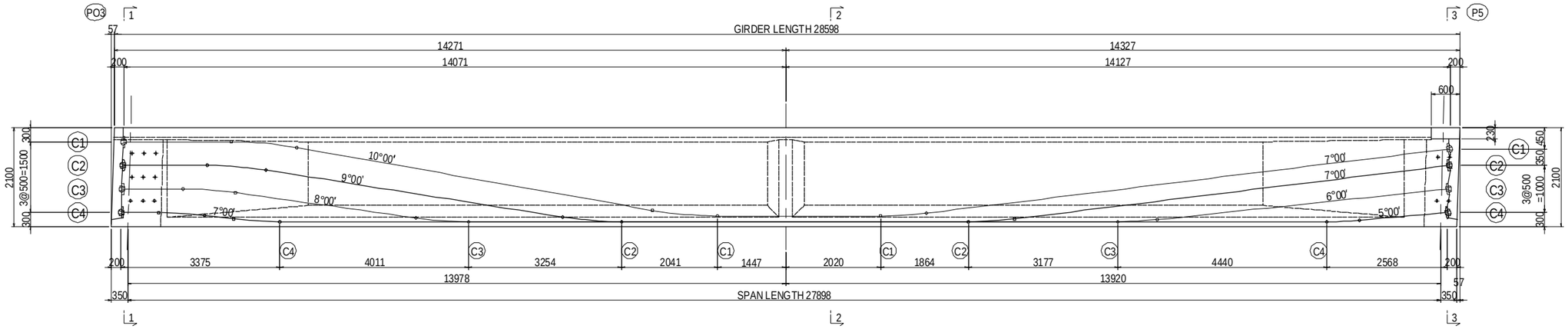


## MEASUREMENT TABLE OF PC TENDON (SWPR7BL 12S12.7mm)

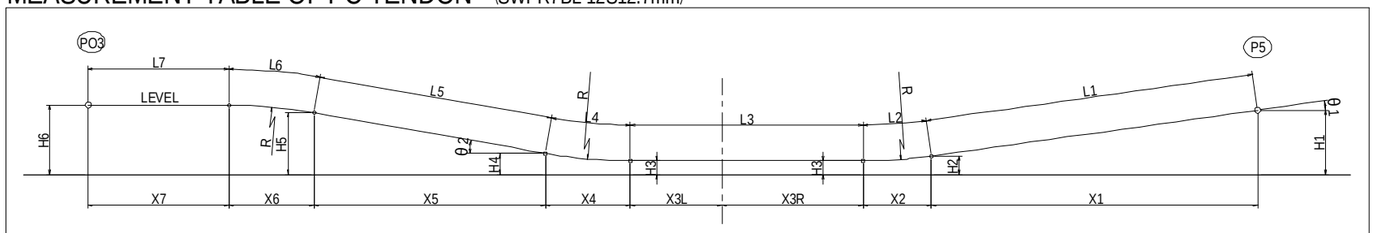


(Unit : mm)

| Cable No | θ1 | θ2 | R | H1 | H2 | H3 | H4 | H5 | H6 | X1 | X2 | X3L | X3R | X4 | X5 | X6 | X7 | L1 | L2 | L3 | L4 | L5 | L6 | L7 | ΣL |
|---|---|---|---|---|---|---|---|---|---|---|---|---|---|---|---|---|---|---|---|---|---|---|---|---|---|
| C1 | 7°00' | 10°00' | 8000 | 1650 | 285 | 225 | 347 | 1678 | 1800 | 11120 | 975 | 1447 | 2020 | 1389 | 7554 | 1389 | 2300 | 11204 | 977 | 3467 | 1396 | 7670 | 1396 | 2300 | 28410 |
| C2 | 7°00' | 9°00' | 8000 | 1300 | 165 | 105 | 203 | 1202 | 1300 | 9247 | 975 | 3489 | 3883 | 1251 | 6301 | 1251 | 1800 | 9316 | 977 | 7372 | 1257 | 6380 | 1257 | 1800 | 28359 |
| C3 | 6°00' | 8°00' | 8000 | 800 | 149 | 105 | 183 | 722 | 800 | 6196 | 836 | 6742 | 7060 | 1113 | 3837 | 1113 | 1300 | 6230 | 838 | 13802 | 1117 | 3875 | 1117 | 1300 | 28279 |
| C4 | 5°00' | 7°00' | 8000 | 300 | 135 | 105 | 165 | 240 | 300 | 1881 | 697 | 10753 | 11500 | 975 | 617 | 975 | 800 | 1888 | 698 | 22253 | 977 | 621 | 977 | 800 | 28214 |

## CROSS SECTION S=1:60

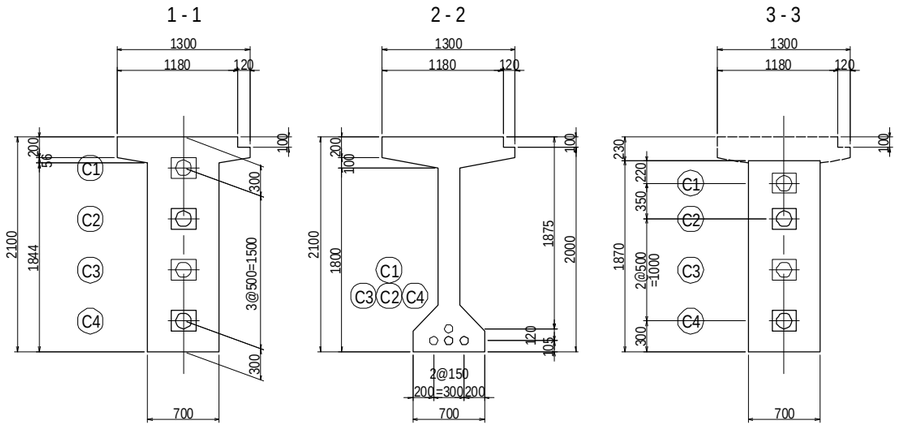


Notes:
- Unless otherwise indicated in drawing, longitudinal PC tendons shall be tensioned from both ends simultaneously.
- Reinforcement for tendon anchorage such as grid rebar shall be arranged sufficiently.
- 1340 N/mm2 is assumed as jacking force of 12S12.7mm tendons in design stage. Jacking force considering jacking sequence shall be indicated on shop drawings and shall be approved by Engineer.

| PROJECT NAME | FINANCED BY | COUNTERPART | JICA STUDY TEAM |
|---|---|---|---|
| DETAILED DESIGN ON BAGO RIVER BRIDGE CONSTRUCTION PROJECT | JAPAN INTERNATIONAL COOPERATION AGENCY | REPUBLIC OF THE UNION OF MYANMAR MINISTRY OF CONSTRUCTION DEPARTMENT OF BRIDGE | NIPPON KOEI CO., LTD. ORIENTAL CONSULTANTS GLOBAL CO., LTD. METROPOLITAN EXPRESSWAY COMPANY LIMITED CHODAI CO.,LTD. NIPPON ENGINEERING CONSULTANTS CO.,LTD. |

| | NAME | SIGNATURE | DATE |
|---|---|---|---|
| PREPARED BY | M. OHYAMA | 大山満弘 | 15 Jun.2017 |
| CHECKED BY | T. HAYAKAWA | 早川和彦 | 20 Jun.2017 |
| APPROVED BY | Y. SANO | 佐野雅一 | 21 Jun.2017 |

| DRAWING TITLE | PACKAGE |
|---|---|
| TENDON ARRANGEMENT OF PRECAST BEAM FOR ON-RAMP (4) | 1 |
| | DWG No. |
| | P1-OR-1104 |

# BAR ARRANGEMENT OF PRECAST BEAM FOR ON-RAMP (1)

## SIDE ELEVATION S=1:100

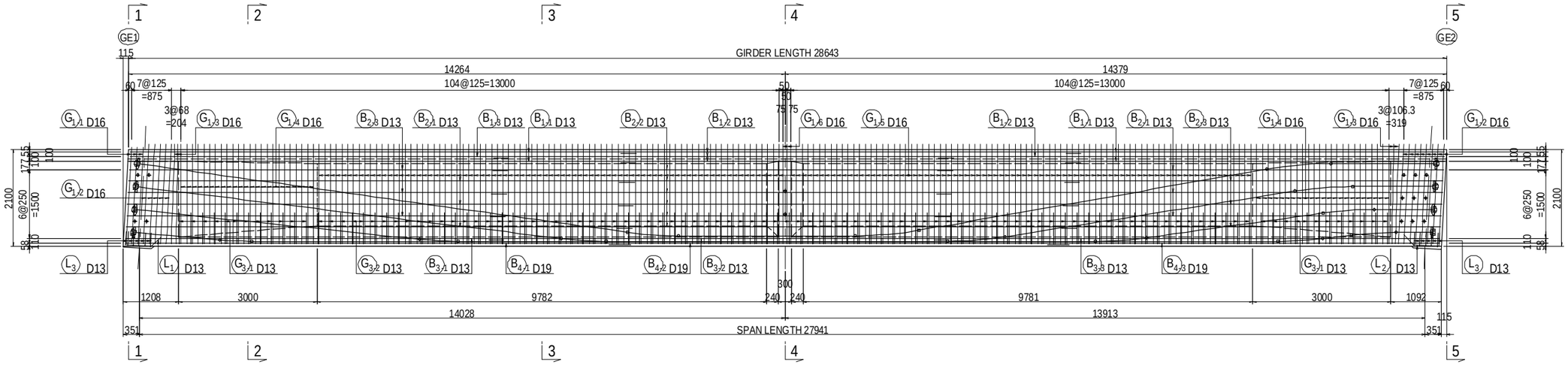


## PLAN VIEW S=1:100

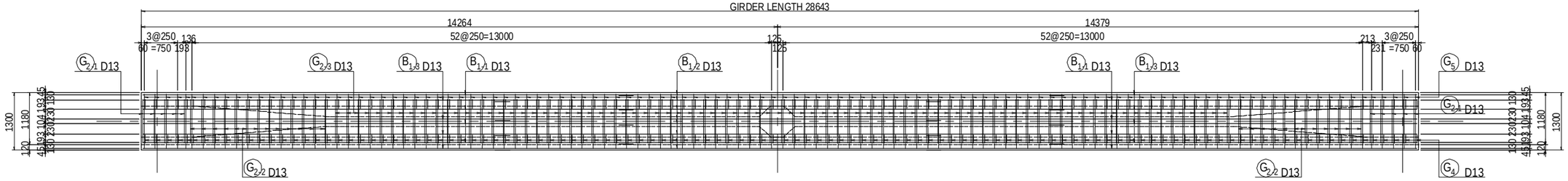


## CROSS SECTION S=1:60

1 - 1

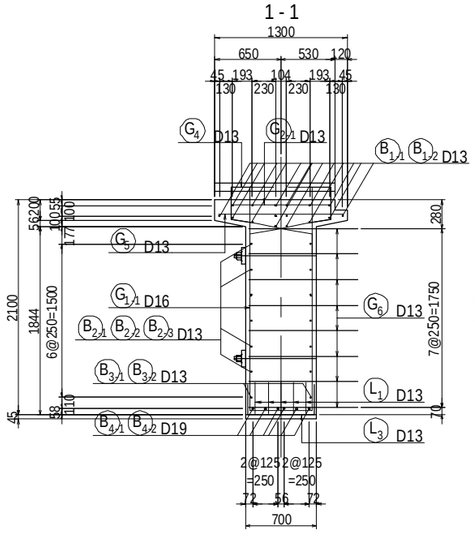

2 - 2

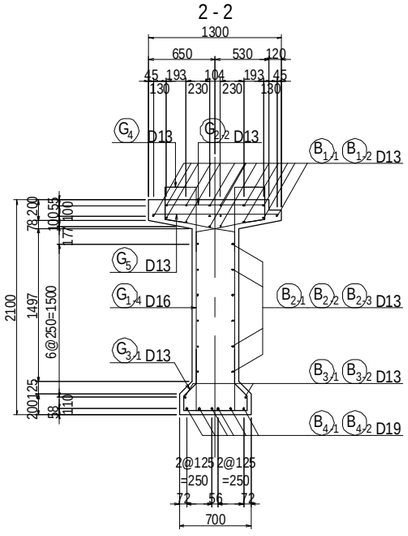

3 - 3

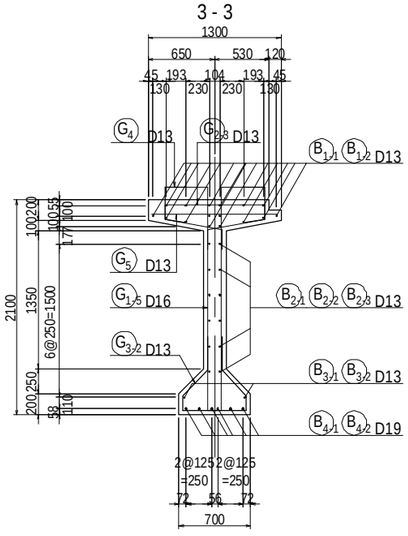

4 - 4

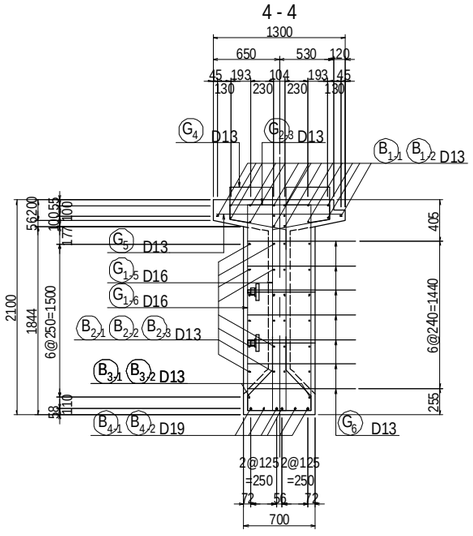

5 - 5

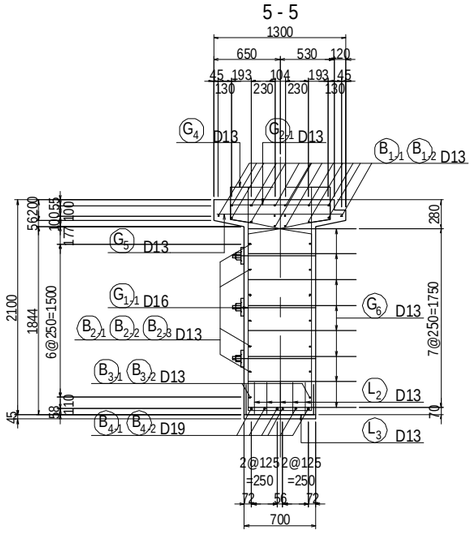

| PROJECT NAME | FINANCED BY | COUNTERPART | JICA STUDY TEAM |
|---|---|---|---|
| DETAILED DESIGN ON BAGO RIVER BRIDGE CONSTRUCTION PROJECT | JAPAN INTERNATIONAL COOPERATION AGENCY | REPUBLIC OF THE UNION OF MYANMAR MINISTRY OF CONSTRUCTION DEPARTMENT OF BRIDGE | NIPPON KOEI CO., LTD. ORIENTAL CONSULTANTS GLOBAL CO., LTD. METROPOLITAN EXPRESSWAY COMPANY LIMITED CHODAI CO.,LTD. NIPPON ENGINEERING CONSULTANTS CO.,LTD. |

| | NAME | SIGNATURE | DATE |
|---|---|---|---|
| PREPARED BY | M. OHYAMA | 大山満弘 | 15 Jun.2017 |
| CHECKED BY | T. HAYAKAWA | 早川知邦 | 20 Jun.2017 |
| APPROVED BY | Y. SANO | 佐野裕一 | 21 Jun.2017 |

| DRAWING TITLE | PACKAGE |
|---|---|
| BAR ARRANGEMENT OF PRECAST BEAM FOR ON-RAMP(1) | 1 |
| | DWG No. |
| | P1-OR-1201 |

# BAR ARRANGEMENT OF PRECAST BEAM FOR ON-RAMP (2)

## LONGITUDINAL REBAR S=1:100

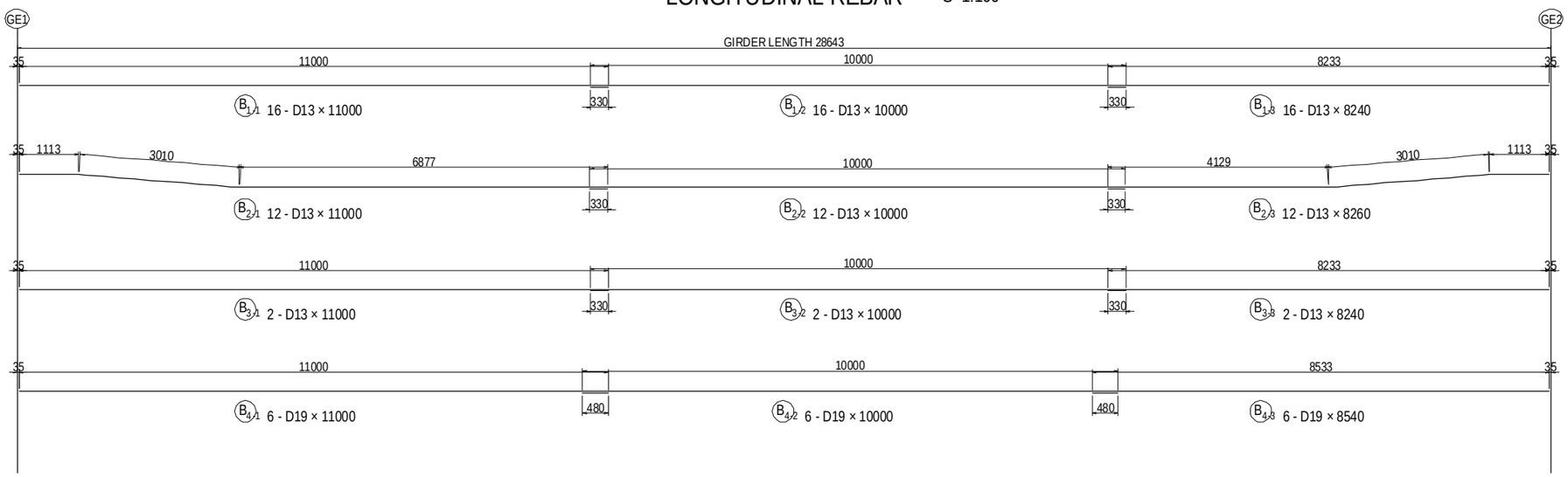


## BAR STATISTICS TABLE

(For 1 Girder)

| Mark | Size | Length (mm) | No. (Nos) | Unit Wt (kg/m) | Rod Wt (kg) | Total Weight (kg) | Shape |
|---|---|---|---|---|---|---|---|
| B 1-1 | D13 | 11000 | 16 | 0.995 | 10.95 | 175 | |
| 1-2 | D13 | 10000 | 16 | 0.995 | 9.95 | 159 | |
| 1-3 | D13 | 8240 | 16 | 0.995 | 8.20 | 131 | |
| 2-1 | D13 | 11000 | 12 | 0.995 | 10.95 | 131 | |
| 2-2 | D13 | 10000 | 12 | 0.995 | 9.95 | 119 | |
| 2-3 | D13 | 8260 | 12 | 0.995 | 8.22 | 99 | |
| 3-1 | D13 | 11000 | 2 | 0.995 | 10.95 | 22 | |
| 3-2 | D13 | 10000 | 2 | 0.995 | 9.95 | 20 | |
| 3-3 | D13 | 8240 | 2 | 0.995 | 8.20 | 16 | |
| 4-1 | D19 | 11000 | 6 | 2.25 | 24.75 | 149 | |
| 4-2 | D19 | 10000 | 6 | 2.25 | 22.50 | 135 | |
| 4-3 | D19 | 8540 | 6 | 2.25 | 19.22 | 115 | |
| G 1-1 | D16 | 5310 | 3 | 1.56 | 8.28 | 25 | |
| 1-2 | D16 | 5470 | 13 | 1.56 | 8.53 | 111 | |
| 1-3 | D16 | 5470 | 4 | 1.56 | 8.53 | 34 | (Ave) |
| 1-4 | D16 | 5230 | 48 | 1.56 | 8.16 | 392 | (Ave) |
| 1-5 | D16 | 4990 | 162 | 1.56 | 7.78 | 1260 | |
| 1-6 | D16 | 5130 | 2 | 1.56 | 8.00 | 16 | |
| 2-1 | D13 | 3290 | 10 | 0.995 | 3.27 | 33 | |
| 2-2 | D13 | 3040 | 25 | 0.995 | 3.02 | 76 | (Ave) |
| 2-3 | D13 | 2800 | 81 | 0.995 | 2.79 | 226 | |
| 3-1 | D13 | 2090 | 24 | 0.995 | 2.08 | 50 | (Ave) |
| 3-2 | D13 | 2260 | 82 | 0.995 | 2.25 | 185 | |
| 4 | D13 | 710 | 232 | 0.995 | 0.71 | 165 | |
| 5 | D13 | 1230 | 116 | 0.995 | 1.22 | 142 | |
| 6 | D13 | 1070 | 42 | 0.995 | 1.06 | 45 | |
| 7 | D13 | 1870 | 16 | 0.995 | 1.86 | 30 | |
| L 1 | D13 | 1170 | 5 | 0.995 | 1.16 | 6 | |
| 2 | D13 | 1170 | 5 | 0.995 | 1.16 | 6 | |
| 3 | D13 | 1220 | 10 | 0.995 | 1.21 | 12 | |
| H 1 | D16 | 620 | 28 | 1.56 | 0.97 | 27 | |
| 2 | D16 | 4270 | 8 | 1.56 | 6.66 | 53 | |
| | | | D13 | | | 1848 kg | |
| | | | D16 | | | 1918 kg | |
| | | | D19 | | | 399 kg | |
| | | | Total Weight | | | 4165 kg | |

## TRANSVERSE REBAR S=1:60

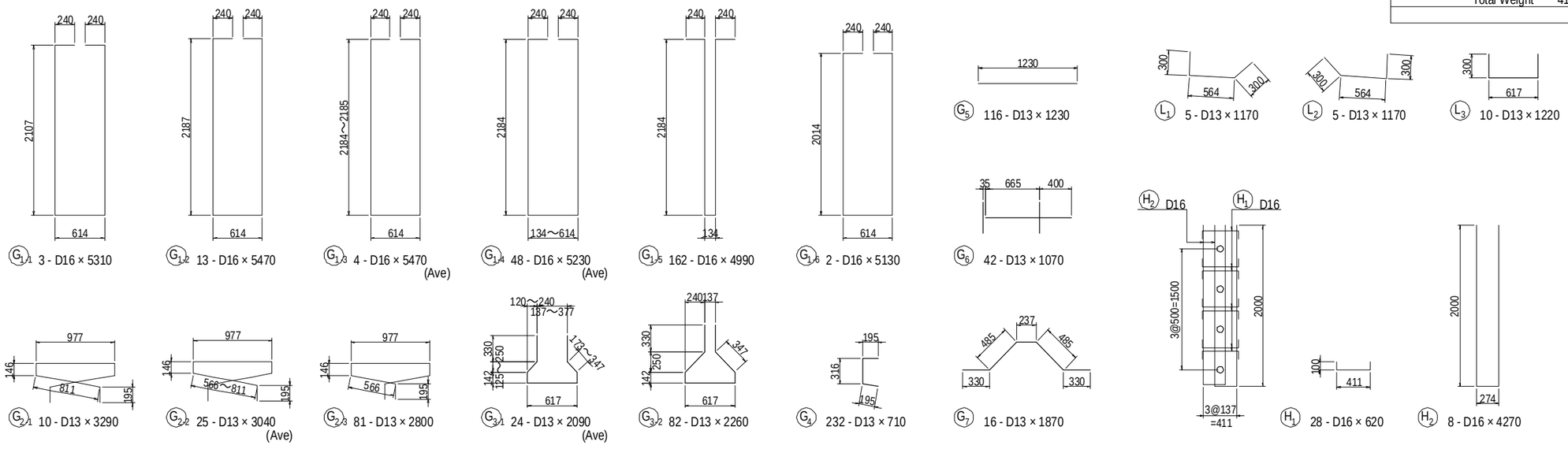


| PROJECT NAME | FINANCED BY | COUNTERPART | JICA STUDY TEAM |
|---|---|---|---|
| DETAILED DESIGN ON BAGO RIVER BRIDGE CONSTRUCTION PROJECT | JAPAN INTERNATIONAL COOPERATION AGENCY | REPUBLIC OF THE UNION OF MYANMAR MINISTRY OF CONSTRUCTION DEPARTMENT OF BRIDGE | NIPPON KOEI CO., LTD. ORIENTAL CONSULTANTS GLOBAL CO., LTD. METROPOLITAN EXPRESSWAY COMPANY LIMITED CHODAI CO.,LTD. NIPPON ENGINEERING CONSULTANTS CO.,LTD. |

| | NAME | SIGNATURE | DATE |
|---|---|---|---|
| PREPARED BY | M. OHYAMA | 大山満弘 | 15 Jun.2017 |
| CHECKED BY | T. HAYAKAWA | 早川知平 | 20 Jun.2017 |
| APPROVED BY | Y. SANO | 佐野雅一 | 21 Jun.2017 |

| DRAWING TITLE | PACKAGE |
|---|---|
| BAR ARRANGEMENT OF PRECAST BEAM FOR ON-RAMP (2) | 1 |
| | DWG No. |
| | P1-OR-1202 |

# BAR ARRANGEMENT OF PRECAST BEAM FOR ON-RAMP (3)

## SIDE ELEVATION S=1:100

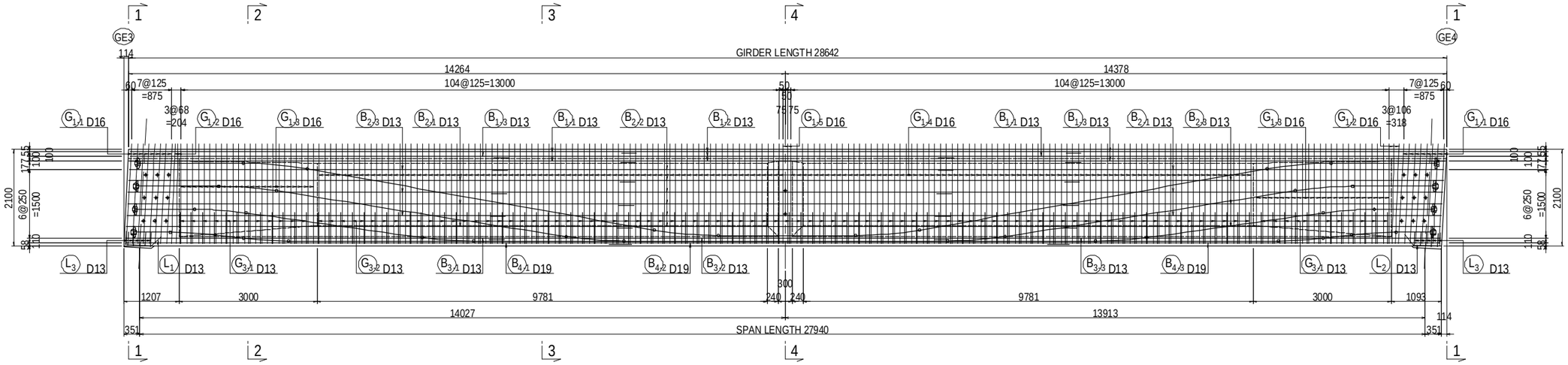


## PLAN VIEW S=1:100

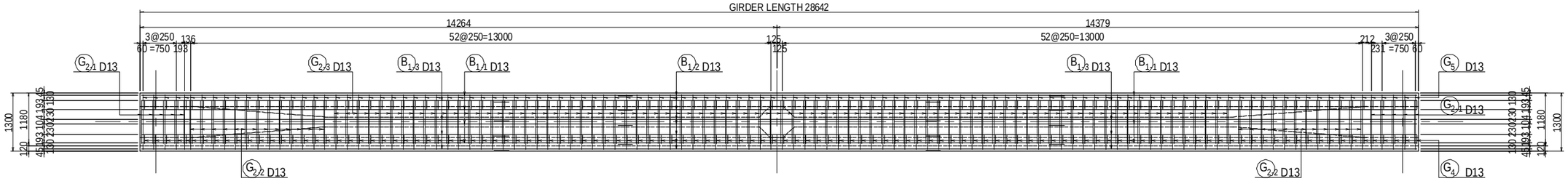


## CROSS SECTION S=1:60

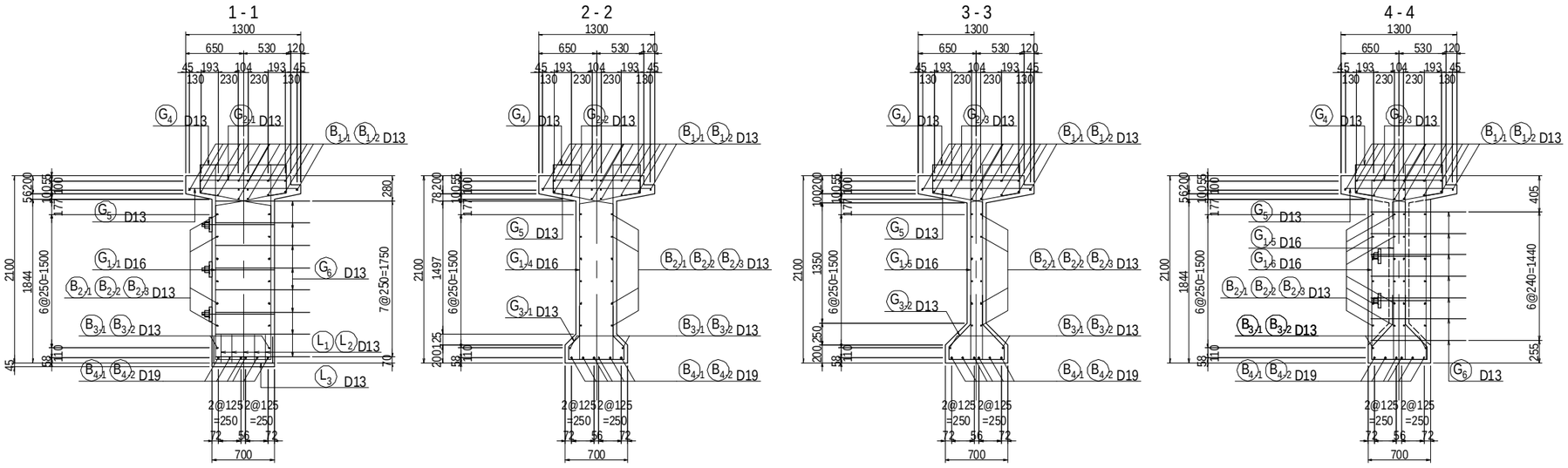


| PROJECT NAME | FINANCED BY | COUNTERPART | JICA STUDY TEAM |
|---|---|---|---|
| DETAILED DESIGN ON BAGO RIVER BRIDGE CONSTRUCTION PROJECT | JAPAN INTERNATIONAL COOPERATION AGENCY | REPUBLIC OF THE UNION OF MYANMAR MINISTRY OF CONSTRUCTION DEPARTMENT OF BRIDGE | NIPPON KOEI CO., LTD. ORIENTAL CONSULTANTS GLOBAL CO., LTD. METROPOLITAN EXPRESSWAY COMPANY LIMITED CHODAI CO.,LTD. NIPPON ENGINEERING CONSULTANTS CO.,LTD. |

| | NAME | SIGNATURE | DATE |
|---|---|---|---|
| PREPARED BY | M. OHYAMA | 大山満弘 | 15 Jun.2017 |
| CHECKED BY | T. HAYAKAWA | 早川知邦 | 20 Jun.2017 |
| APPROVED BY | Y. SANO | 佐野雅一 | 21 Jun.2017 |

DRAWING TITLE: BAR ARRANGEMENT OF PRECAST BEAM FOR ON-RAMP (3)

PACKAGE: 1

DWG No.: P1-OR-1203

# BAR ARRANGEMENT OF PRECAST BEAM FOR ON-RAMP (4)

## LONGITUDINAL REBAR S=1:100

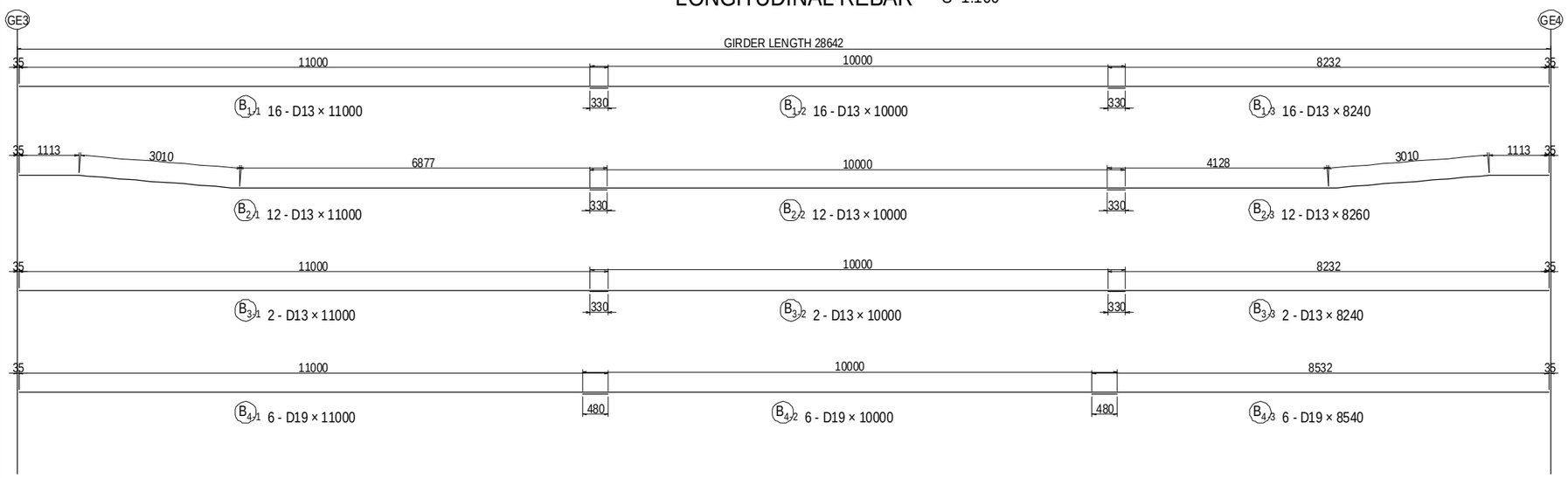


## BAR STATISTICS TABLE

(For 1 Girder)

| Mark | Size | Length (mm) | No. (Nos) | Unit Wt (kg/m) | Rod Wt (kg) | Total Weight (kg) | Shape |
|---|---|---|---|---|---|---|---|
| B 1-1 | D13 | 11000 | 16 | 0.995 | 10.95 | 175 | |
| 1-2 | D13 | 10000 | 16 | 0.995 | 9.95 | 159 | |
| 1-3 | D13 | 8240 | 16 | 0.995 | 8.20 | 131 | |
| 2-1 | D13 | 11000 | 12 | 0.995 | 10.95 | 131 | |
| 2-2 | D13 | 10000 | 12 | 0.995 | 9.95 | 119 | |
| 2-3 | D13 | 8260 | 12 | 0.995 | 8.22 | 99 | |
| 3-1 | D13 | 11000 | 2 | 0.995 | 10.95 | 22 | |
| 3-2 | D13 | 10000 | 2 | 0.995 | 9.95 | 20 | |
| 3-3 | D13 | 8240 | 2 | 0.995 | 8.20 | 16 | |
| 4-1 | D19 | 11000 | 6 | 2.25 | 24.75 | 149 | |
| 4-2 | D19 | 10000 | 6 | 2.25 | 22.50 | 135 | |
| 4-3 | D19 | 8540 | 6 | 2.25 | 19.22 | 115 | |
| G 1-1 | D16 | 5470 | 16 | 1.56 | 8.53 | 136 | |
| 1-2 | D16 | 5470 | 4 | 1.56 | 8.53 | 34 | (Ave) |
| 1-3 | D16 | 5230 | 48 | 1.56 | 8.16 | 392 | (Ave) |
| 1-4 | D16 | 4990 | 162 | 1.56 | 7.78 | 1260 | |
| 1-5 | D16 | 5130 | 2 | 1.56 | 8.00 | 16 | |
| 2-1 | D13 | 3290 | 10 | 0.995 | 3.27 | 33 | |
| 2-2 | D13 | 3040 | 25 | 0.995 | 3.02 | 76 | (Ave) |
| 2-3 | D13 | 2800 | 81 | 0.995 | 2.79 | 226 | |
| 3-1 | D13 | 2090 | 24 | 0.995 | 2.08 | 50 | (Ave) |
| 3-2 | D13 | 2260 | 82 | 0.995 | 2.25 | 185 | |
| 4 | D13 | 710 | 232 | 0.995 | 0.71 | 165 | |
| 5 | D13 | 1230 | 116 | 0.995 | 1.22 | 142 | |
| 6 | D13 | 1070 | 42 | 0.995 | 1.06 | 45 | |
| 7 | D13 | 1870 | 16 | 0.995 | 1.86 | 30 | |
| L 1 | D13 | 1170 | 5 | 0.995 | 1.16 | 6 | |
| 2 | D13 | 1170 | 5 | 0.995 | 1.16 | 6 | |
| 3 | D13 | 1220 | 10 | 0.995 | 1.21 | 12 | |
| H 1 | D16 | 620 | 28 | 1.56 | 0.97 | 27 | |
| 2 | D16 | 4270 | 8 | 1.56 | 6.66 | 53 | |
| | | | D13 | | | 1848 kg | |
| | | | D16 | | | 1918 kg | |
| | | | D19 | | | 399 kg | |
| | | | Total Weight | | | 4165 kg | |

## TRANSVERSE REBAR S=1:60

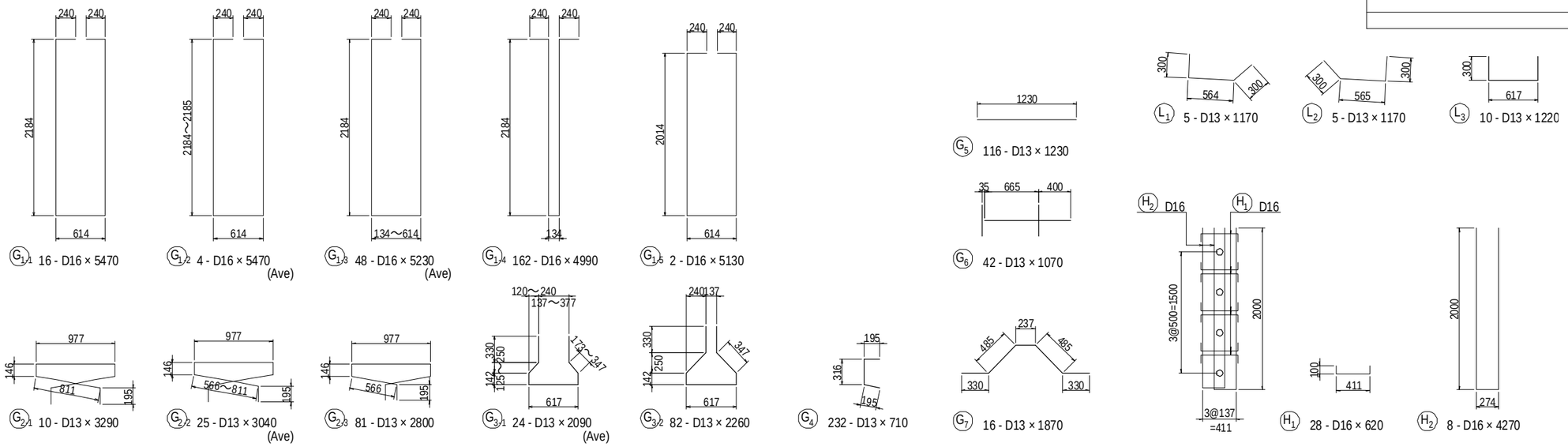


| PROJECT NAME | FINANCED BY | COUNTERPART | JICA STUDY TEAM |
|---|---|---|---|
| DETAILED DESIGN ON BAGO RIVER BRIDGE CONSTRUCTION PROJECT | JAPAN INTERNATIONAL COOPERATION AGENCY | REPUBLIC OF THE UNION OF MYANMAR MINISTRY OF CONSTRUCTION DEPARTMENT OF BRIDGE | NIPPON KOEI CO., LTD. ORIENTAL CONSULTANTS GLOBAL CO., LTD. METROPOLITAN EXPRESSWAY COMPANY LIMITED CHODAI CO.,LTD. NIPPON ENGINEERING CONSULTANTS CO.,LTD. |

| | NAME | SIGNATURE | DATE |
|---|---|---|---|
| PREPARED BY | M. OHYAMA | 大山満弘 | 15 Jun.2017 |
| CHECKED BY | T. HAYAKAWA | 早川知邦 | 20 Jun.2017 |
| APPROVED BY | Y. SANO | 佐野裕一 | 21 Jun.2017 |

DRAWING TITLE: BAR ARRANGEMENT OF PRECAST BEAM FOR ON-RAMP (4)

PACKAGE: 1

DWG No.: P1-OR-1204

# BAR ARRANGEMENT OF PRECAST BEAM FOR ON-RAMP (5)

## SIDE ELEVATION S=1:100

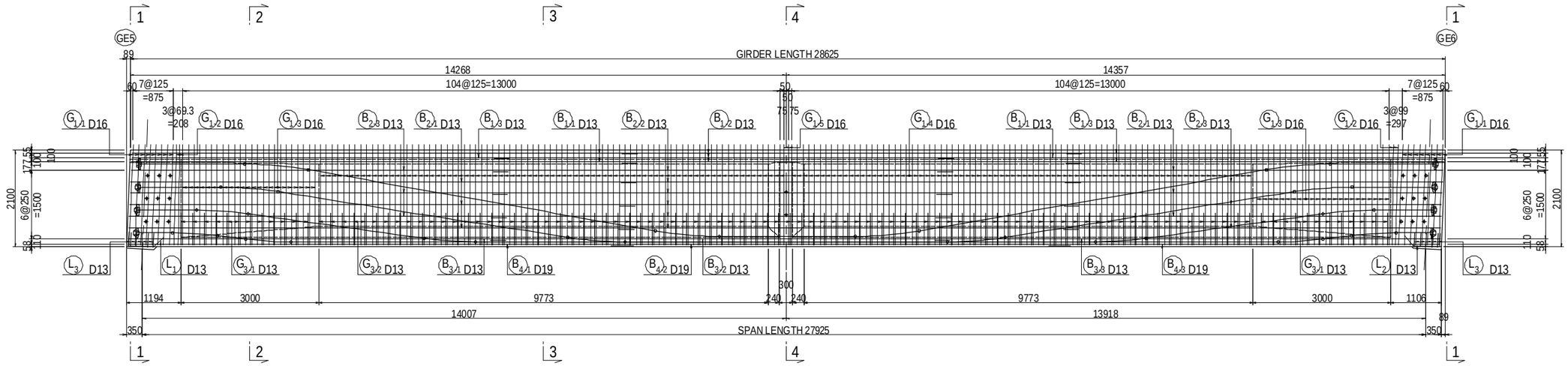


## PLAN VIEW S=1:100

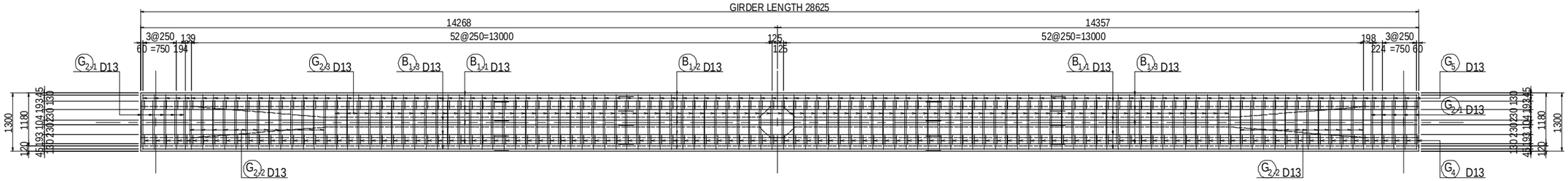


## CROSS SECTION S=1:60

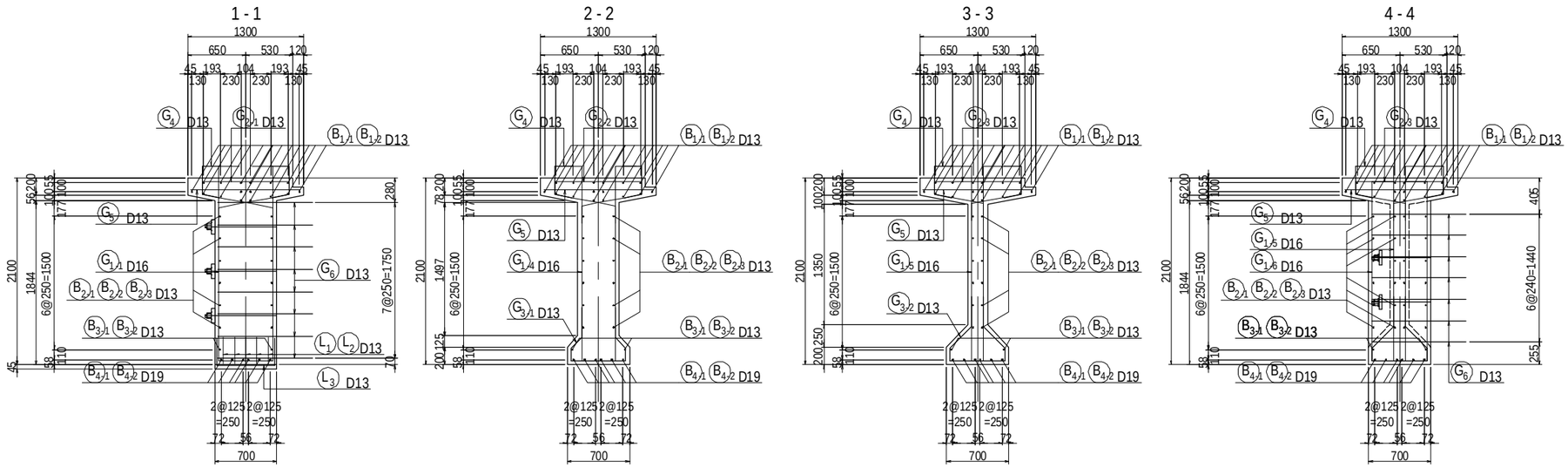


| PROJECT NAME | FINANCED BY | COUNTERPART | JICA STUDY TEAM |
|---|---|---|---|
| DETAILED DESIGN ON BAGO RIVER BRIDGE CONSTRUCTION PROJECT | JAPAN INTERNATIONAL COOPERATION AGENCY | REPUBLIC OF THE UNION OF MYANMAR MINISTRY OF CONSTRUCTION DEPARTMENT OF BRIDGE | NIPPON KOEI CO., LTD. ORIENTAL CONSULTANTS GLOBAL CO., LTD. METROPOLITAN EXPRESSWAY COMPANY LIMITED CHODAI CO.,LTD. NIPPON ENGINEERING CONSULTANTS CO.,LTD. |

| | NAME | SIGNATURE | DATE |
|---|---|---|---|
| PREPARED BY | M. OHYAMA | 大山満弘 | 15 Jun.2017 |
| CHECKED BY | T. HAYAKAWA | 早川知邦 | 20 Jun.2017 |
| APPROVED BY | Y. SANO | 佐野雄一 | 21 Jun.2017 |

| DRAWING TITLE | PACKAGE |
|---|---|
| BAR ARRANGEMENT OF PRECAST BEAM FOR ON-RAMP (5) | 1 |
| | DWG No. |
| | P1-OR-1205 |

# BAR ARRANGEMENT OF PRECAST BEAM FOR ON-RAMP (6)

## LONGITUDINAL REBAR S=1:100

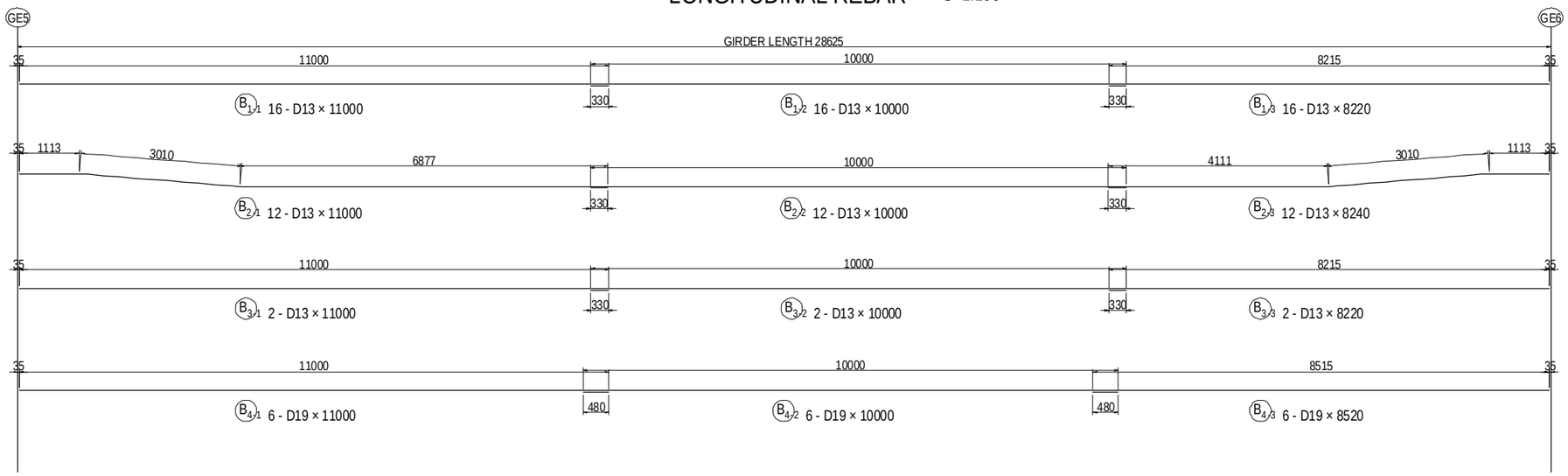


## BAR STATISTICS TABLE

(For 1 Girder)

| Mark | Size | Length (mm) | No. (Nos) | Unit Wt (kg/m) | Rod Wt (kg) | Total Weight (kg) | Shape |
|---|---|---|---|---|---|---|---|
| B 1-1 | D13 | 11000 | 16 | 0.995 | 10.95 | 175 | |
| 1-2 | D13 | 10000 | 16 | 0.995 | 9.95 | 159 | |
| 1-3 | D13 | 8220 | 16 | 0.995 | 8.18 | 131 | |
| 2-1 | D13 | 11000 | 12 | 0.995 | 10.95 | 131 | |
| 2-2 | D13 | 10000 | 12 | 0.995 | 9.95 | 119 | |
| 2-3 | D13 | 8240 | 12 | 0.995 | 8.20 | 98 | |
| 3-1 | D13 | 11000 | 2 | 0.995 | 10.95 | 22 | |
| 3-2 | D13 | 10000 | 2 | 0.995 | 9.95 | 20 | |
| 3-3 | D13 | 8220 | 2 | 0.995 | 8.18 | 16 | |
| 4-1 | D19 | 11000 | 6 | 2.25 | 24.75 | 149 | |
| 4-2 | D19 | 10000 | 6 | 2.25 | 22.50 | 135 | |
| 4-3 | D19 | 8520 | 6 | 2.25 | 19.17 | 115 | |
| G 1-1 | D16 | 5470 | 16 | 1.56 | 8.53 | 136 | |
| 1-2 | D16 | 5470 | 4 | 1.56 | 8.53 | 34 | (Ave) |
| 1-3 | D16 | 5230 | 48 | 1.56 | 8.16 | 392 | (Ave) |
| 1-4 | D16 | 4990 | 162 | 1.56 | 7.78 | 1260 | |
| 1-5 | D16 | 5130 | 2 | 1.56 | 8.00 | 16 | |
| 2-1 | D13 | 3290 | 10 | 0.995 | 3.27 | 33 | |
| 2-2 | D13 | 3040 | 25 | 0.995 | 3.02 | 76 | (Ave) |
| 2-3 | D13 | 2800 | 81 | 0.995 | 2.79 | 226 | |
| 3-1 | D13 | 2090 | 24 | 0.995 | 2.08 | 50 | (Ave) |
| 3-2 | D13 | 2260 | 82 | 0.995 | 2.25 | 185 | |
| 4 | D13 | 710 | 232 | 0.995 | 0.71 | 165 | |
| 5 | D13 | 1230 | 116 | 0.995 | 1.22 | 142 | |
| 6 | D13 | 1070 | 42 | 0.995 | 1.06 | 45 | |
| 7 | D13 | 1870 | 16 | 0.995 | 1.86 | 30 | |
| L 1 | D13 | 1170 | 5 | 0.995 | 1.16 | 6 | |
| 2 | D13 | 1170 | 5 | 0.995 | 1.16 | 6 | |
| 3 | D13 | 1220 | 10 | 0.995 | 1.21 | 12 | |
| H 1 | D16 | 620 | 28 | 1.56 | 0.97 | 27 | |
| 2 | D16 | 4270 | 8 | 1.56 | 6.66 | 53 | |
| | | | | D13 | 1847 kg | | |
| | | | | D16 | 1918 kg | | |
| | | | | D19 | 399 kg | | |
| | | | | Total Weight | 4164 kg | | |

## TRANSVERSE REBAR S=1:60

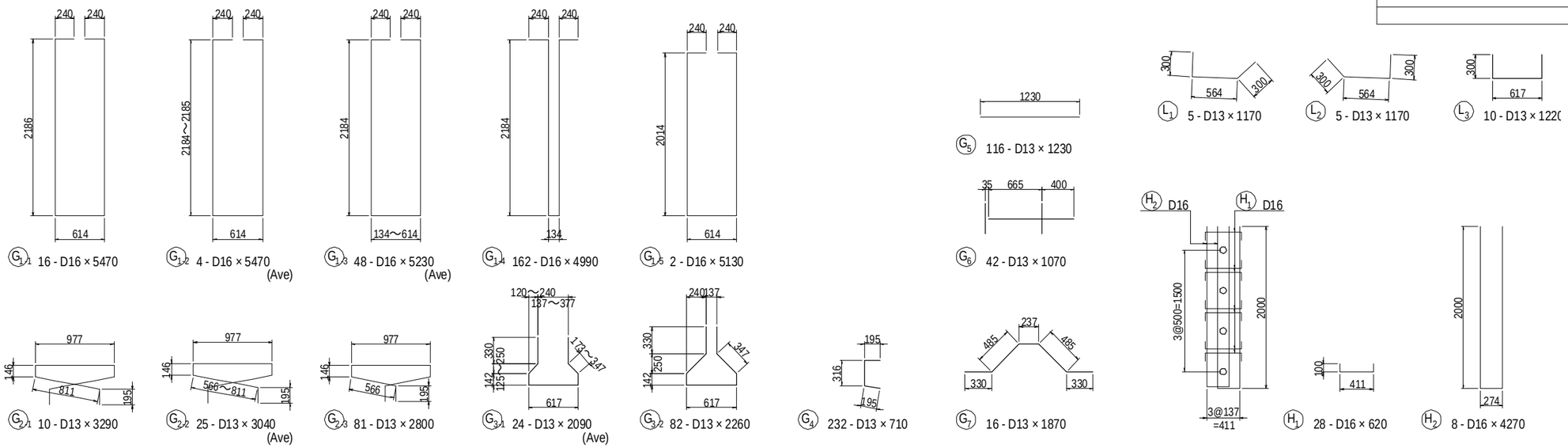


| PROJECT NAME | FINANCED BY | COUNTERPART | JICA STUDY TEAM |
|---|---|---|---|
| DETAILED DESIGN ON BAGO RIVER BRIDGE CONSTRUCTION PROJECT | JAPAN INTERNATIONAL COOPERATION AGENCY | REPUBLIC OF THE UNION OF MYANMAR MINISTRY OF CONSTRUCTION DEPARTMENT OF BRIDGE | NIPPON KOEI CO., LTD. ORIENTAL CONSULTANTS GLOBAL CO., LTD. METROPOLITAN EXPRESSWAY COMPANY LIMITED CHODAI CO.,LTD. NIPPON ENGINEERING CONSULTANTS CO.,LTD. |

| | NAME | SIGNATURE | DATE |
|---|---|---|---|
| PREPARED BY | M. OHYAMA | 大山満弘 | 15 Jun.2017 |
| CHECKED BY | T. HAYAKAWA | 早川知邦 | 20 Jun.2017 |
| APPROVED BY | Y. SANO | 佐野裕一 | 21 Jun.2017 |

| DRAWING TITLE | PACKAGE |
|---|---|
| BAR ARRANGEMENT OF PRECAST BEAM FOR ON-RAMP (6) | 1 |
| | DWG No. |
| | P1-OR-1206 |

# BAR ARRANGEMENT OF PRECAST BEAM FOR ON-RAMP (7)

## SIDE ELEVATION S=1:100

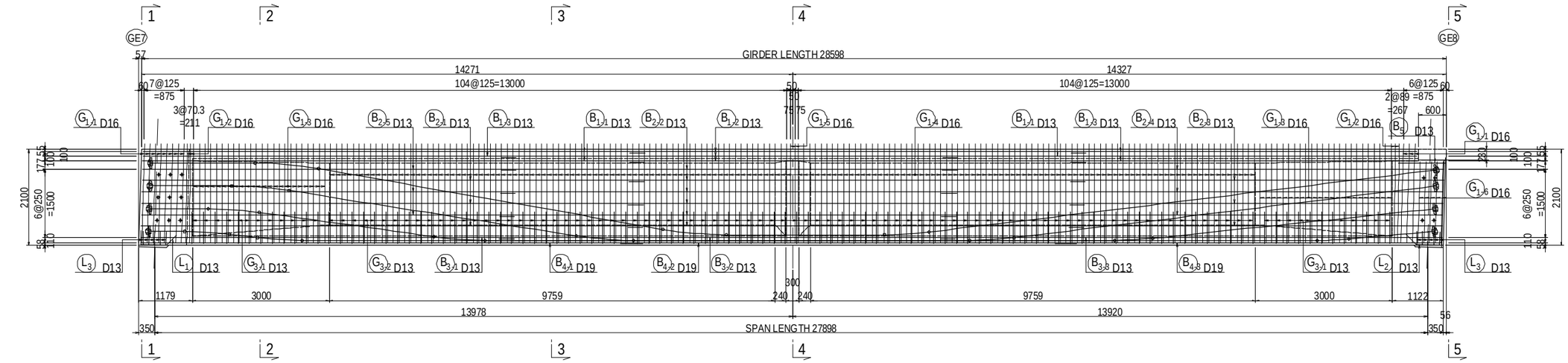


## PLAN VIEW S=1:100

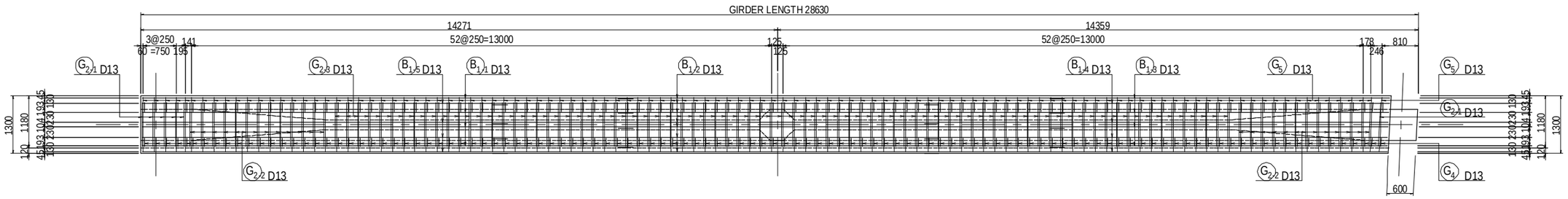


## CROSS SECTION S=1:60

1 - 1

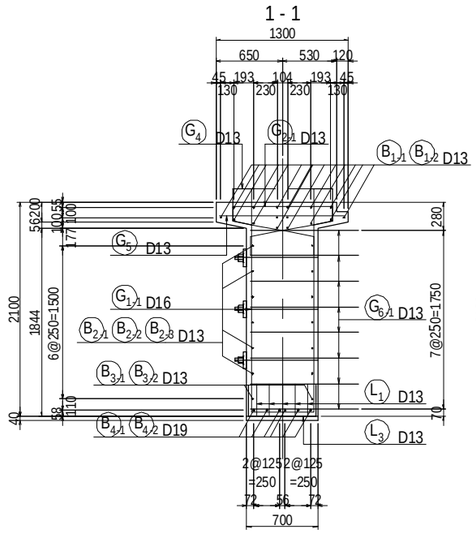

2 - 2

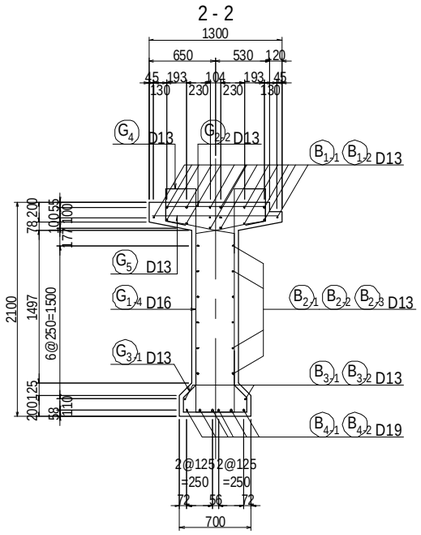

3 - 3

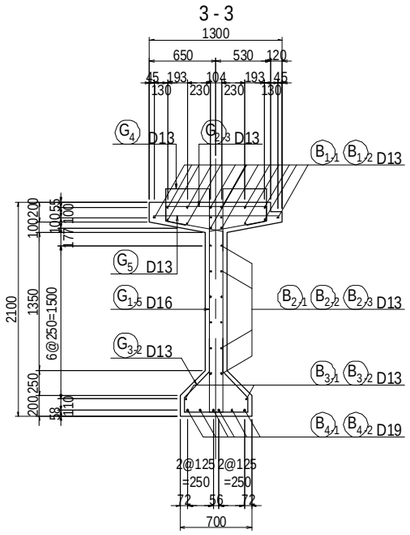

4 - 4

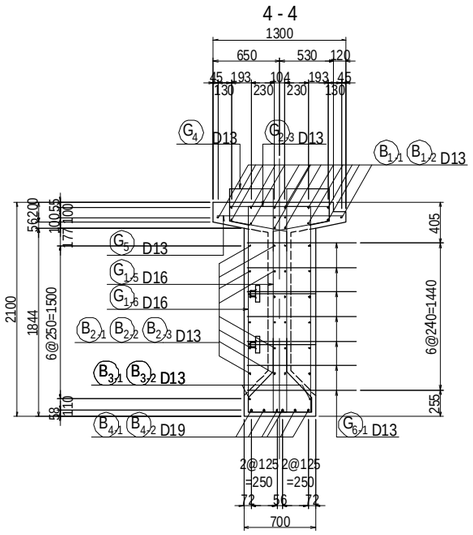

5 - 5

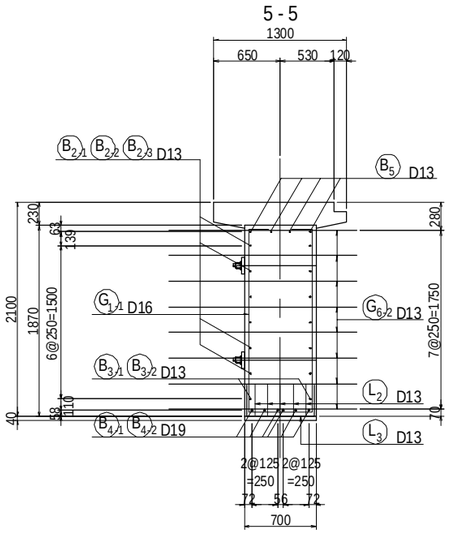

| PROJECT NAME | FINANCED BY | COUNTERPART | JICA STUDY TEAM |
|---|---|---|---|
| DETAILED DESIGN ON BAGO RIVER BRIDGE CONSTRUCTION PROJECT | JAPAN INTERNATIONAL COOPERATION AGENCY | REPUBLIC OF THE UNION OF MYANMAR MINISTRY OF CONSTRUCTION DEPARTMENT OF BRIDGE | NIPPON KOEI CO., LTD. ORIENTAL CONSULTANTS GLOBAL CO., LTD. METROPOLITAN EXPRESSWAY COMPANY LIMITED CHODAI CO.,LTD. NIPPON ENGINEERING CONSULTANTS CO.,LTD. |

| | NAME | SIGNATURE | DATE |
|---|---|---|---|
| PREPARED BY | M. OHYAMA | 大山満弘 | 15 Jun.2017 |
| CHECKED BY | T. HAYAKAWA | 早川敏彦 | 20 Jun.2017 |
| APPROVED BY | Y. SANO | 佐野 雅一 | 21 Jun.2017 |

| DRAWING TITLE | PACKAGE |
|---|---|
| BAR ARRANGEMENT OF PRECAST BEAM FOR ON-RAMP (7) | 1 |
| | DWG No. |
| | P1-OR-1207 |

# BAR ARRANGEMENT OF PRECAST BEAM FOR ON-RAMP (8)

## LONGITUDINAL REBAR S=1:100

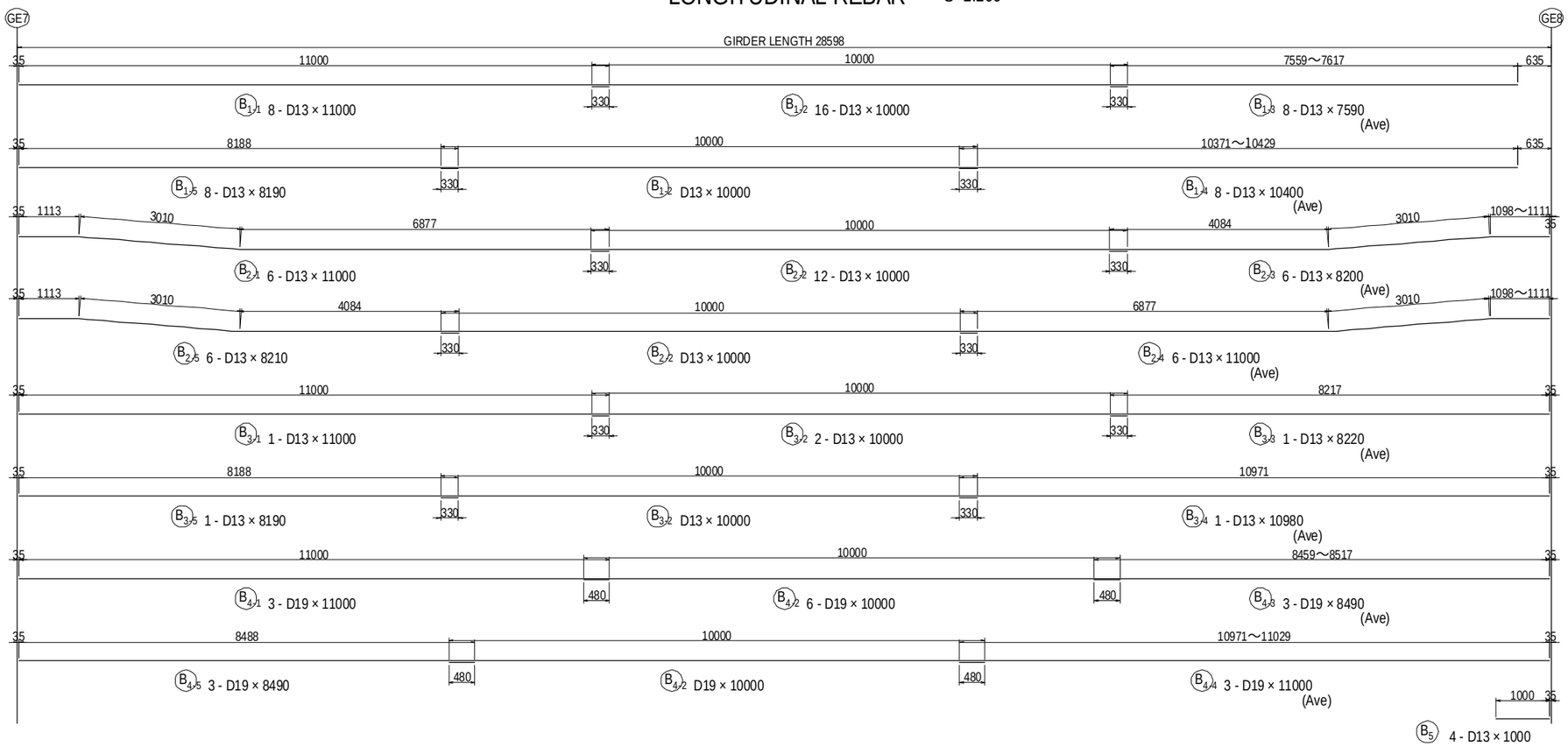


## TRANSVERSE REBAR S=1:60

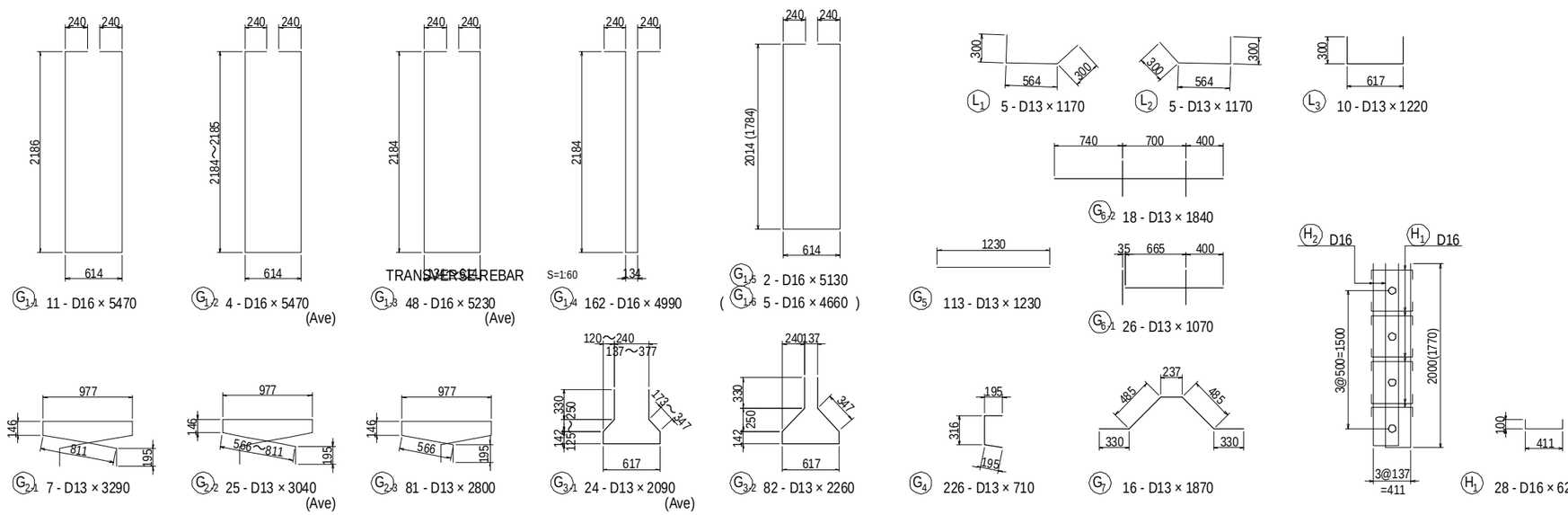


## BAR STATISTICS TABLE

(For 1 Girder)

| Mark | Size | Length (mm) | No. (Nos) | Unit Wt (kg/m) | Rod Wt (kg) | Total Weight (kg) | Shape |
|---|---|---|---|---|---|---|---|
| B 1-1 | D13 | 11000 | 8 | 0.995 | 10.95 | 88 | — |
| 1-2 | D13 | 10000 | 16 | 0.995 | 9.95 | 159 | — |
| 1-3 | D13 | 7590 | 8 | 0.995 | 7.55 | 60 | — |
| 1-4 | D13 | 10400 | 8 | 0.995 | 10.35 | 83 | — |
| 1-5 | D13 | 8190 | 8 | 0.995 | 8.15 | 65 | — |
| 2-1 | D13 | 11000 | 6 | 0.995 | 10.95 | 66 | ⌒ |
| 2-2 | D13 | 10000 | 12 | 0.995 | 9.95 | 119 | — |
| 2-3 | D13 | 8200 | 6 | 0.995 | 8.16 | 49 | ⌒ |
| 2-4 | D13 | 11000 | 6 | 0.995 | 10.95 | 66 | ⌒ |
| 2-5 | D13 | 8210 | 6 | 0.995 | 8.17 | 49 | ⌒ |
| 3-1 | D13 | 11000 | 1 | 0.995 | 10.95 | 11 | — |
| 3-2 | D13 | 10000 | 2 | 0.995 | 9.95 | 20 | — |
| 3-3 | D13 | 8220 | 1 | 0.995 | 8.18 | 8 | — |
| 3-4 | D13 | 10980 | 1 | 0.995 | 10.93 | 11 | — |
| 3-5 | D13 | 8190 | 1 | 0.995 | 8.15 | 8 | — |
| 4-1 | D19 | 11000 | 3 | 2.25 | 24.75 | 74 | — |
| 4-2 | D19 | 10000 | 6 | 2.25 | 22.50 | 135 | — |
| 4-3 | D19 | 8490 | 3 | 2.25 | 19.10 | 57 | — |
| 4-4 | D19 | 11000 | 3 | 2.25 | 24.75 | 74 | — |
| 4-5 | D19 | 8490 | 3 | 2.25 | 19.10 | 57 | — |
| 5 | D13 | 1000 | 4 | 0.995 | 1.00 | 4 | — |
| G 1-1 | D16 | 5470 | 11 | 1.56 | 8.53 | 94 | □ |
| 1-2 | D16 | 5470 | 4 | 1.56 | 8.53 | 34 | □ (Ave) |
| 1-3 | D16 | 5230 | 48 | 1.56 | 8.16 | 392 | □ (Ave) |
| 1-4 | D16 | 4990 | 162 | 1.56 | 7.78 | 1260 | ⊓ |
| 1-5 | D16 | 5130 | 2 | 1.56 | 8.00 | 16 | □ |
| 1-6 | D16 | 4660 | 5 | 1.56 | 7.27 | 36 | □ |
| 2-1 | D13 | 3290 | 7 | 0.995 | 3.27 | 23 | ⊓ |
| 2-2 | D13 | 3040 | 25 | 0.995 | 3.02 | 76 | ⊓ (Ave) |
| 2-3 | D13 | 2800 | 81 | 0.995 | 2.79 | 226 | ⊓ |
| 3-1 | D13 | 2090 | 24 | 0.995 | 2.08 | 50 | ⅄ (Ave) |
| 3-2 | D13 | 2260 | 82 | 0.995 | 2.25 | 185 | ⅄ |
| 4 | D13 | 710 | 226 | 0.995 | 0.71 | 160 | ⊂ |
| 5 | D13 | 1230 | 113 | 0.995 | 1.22 | 138 | — |
| 6-1 | D13 | 1070 | 26 | 0.995 | 1.06 | 28 | — |
| 6-2 | D13 | 1840 | 18 | 0.995 | 1.83 | 33 | — |
| 7 | D13 | 1870 | 16 | 0.995 | 1.86 | 30 | ∿ |
| L 1 | D13 | 1170 | 5 | 0.995 | 1.16 | 6 | ⌞ |
| 2 | D13 | 1170 | 4 | 0.995 | 1.16 | 5 | ⌟ |
| 3 | D13 | 1220 | 4 | 0.995 | 1.21 | 5 | ⊔ |
| H 1 | D16 | 620 | 28 | 1.56 | 0.97 | 27 | ⊔ |
| 2-1 | D16 | 4270 | 4 | 1.56 | 6.66 | 27 | ⊔ |
| 2-2 | D16 | 3810 | 4 | 1.56 | 5.94 | 24 | ⊔ |

| | | |
|---|---|---|
| D13 | 1831 | kg |
| D16 | 1910 | kg |
| D19 | 397 | kg |
| Total Weight | 4138 | kg |

| PROJECT NAME | FINANCED BY | COUNTERPART | JICA STUDY TEAM |
|---|---|---|---|
| DETAILED DESIGN ON BAGO RIVER BRIDGE CONSTRUCTION PROJECT | JAPAN INTERNATIONAL COOPERATION AGENCY | REPUBLIC OF THE UNION OF MYANMAR MINISTRY OF CONSTRUCTION DEPARTMENT OF BRIDGE | NIPPON KOEI CO., LTD. ORIENTAL CONSULTANTS GLOBAL CO., LTD. METROPOLITAN EXPRESSWAY COMPANY LIMITED CHODAI CO.,LTD. NIPPON ENGINEERING CONSULTANTS CO.,LTD. |

| | NAME | SIGNATURE | DATE |
|---|---|---|---|
| PREPARED BY | M. OHYAMA | 大山満弘 | 15 Jun.2017 |
| CHECKED BY | T. HAYAKAWA | 平川知彦 | 20 Jun.2017 |
| APPROVED BY | Y. SANO | 佐野裕一 | 21 Jun.2017 |

DRAWING TITLE: BAR ARRANGEMENT OF PRECAST BEAM FOR ON-RAMP (8)

PACKAGE: 1

DWG No.: P1-OR-1208

# BAR ARRANGEMENT OF SLAB FOR ON-RAMP (1)

S=1:100

## PLAN VIEW

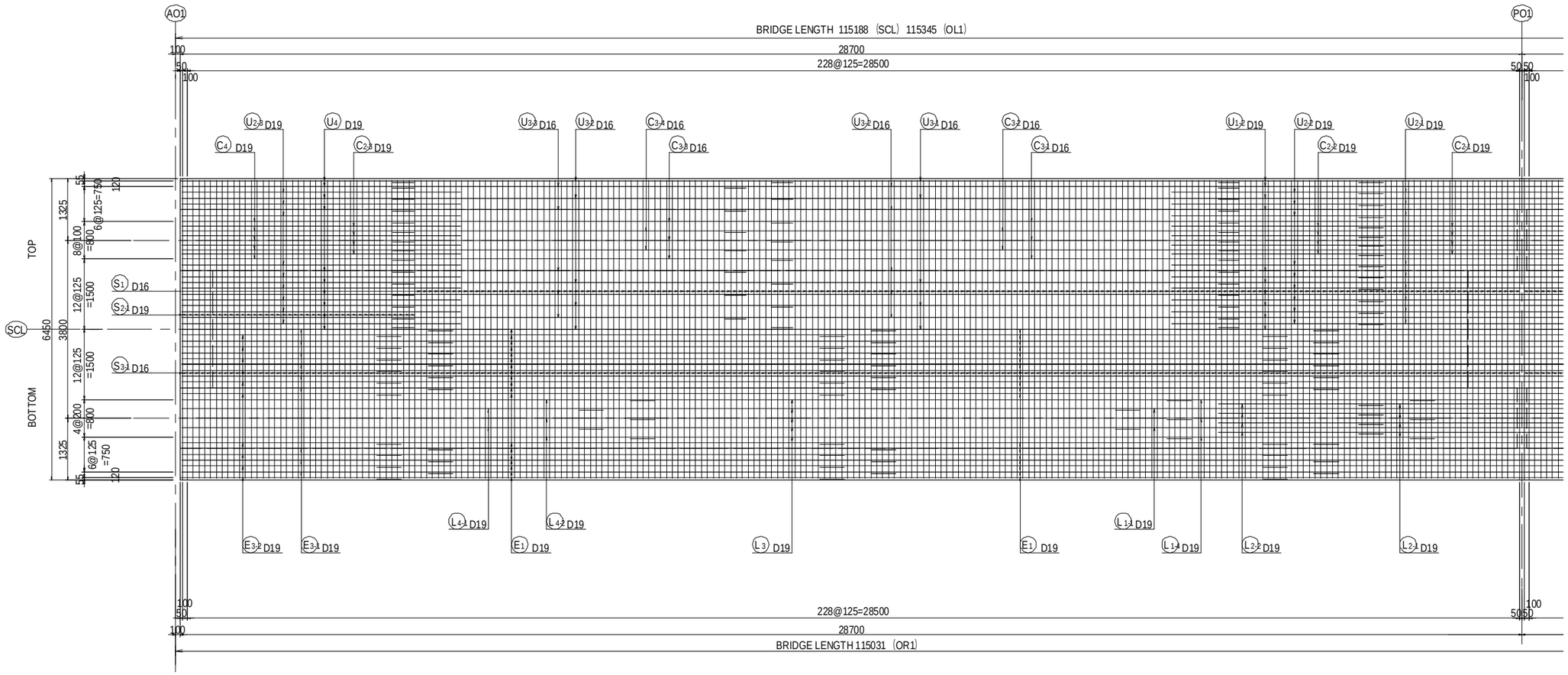


| PROJECT NAME | FINANCED BY | COUNTERPART | JICA STUDY TEAM |
|---|---|---|---|
| DETAILED DESIGN ON BAGO RIVER BRIDGE CONSTRUCTION PROJECT | JAPAN INTERNATIONAL COOPERATION AGENCY | REPUBLIC OF THE UNION OF MYANMAR MINISTRY OF CONSTRUCTION DEPARTMENT OF BRIDGE | NIPPON KOEI CO., LTD. ORIENTAL CONSULTANTS GLOBAL CO., LTD. METROPOLITAN EXPRESSWAY COMPANY LIMITED CHODAI CO.,LTD. NIPPON ENGINEERING CONSULTANTS CO.,LTD. |

| | NAME | SIGNATURE | DATE |
|---|---|---|---|
| PREPARED BY | M. OHYAMA | 大山満弘 | 15 Jun.2017 |
| CHECKED BY | T. HAYAKAWA | 早川知彦 | 20 Jun.2017 |
| APPROVED BY | Y. SANO | 佐野雅一 | 21 Jun.2017 |

DRAWING TITLE: BAR ARRANGEMENT OF SLAB FOR ON-RAMP (1)

PACKAGE: 1

DWG No.: P1-OR-1301

# BAR ARRANGEMENT OF SLAB FOR ON-RAMP (2)

S=1:100

## PLAN VIEW

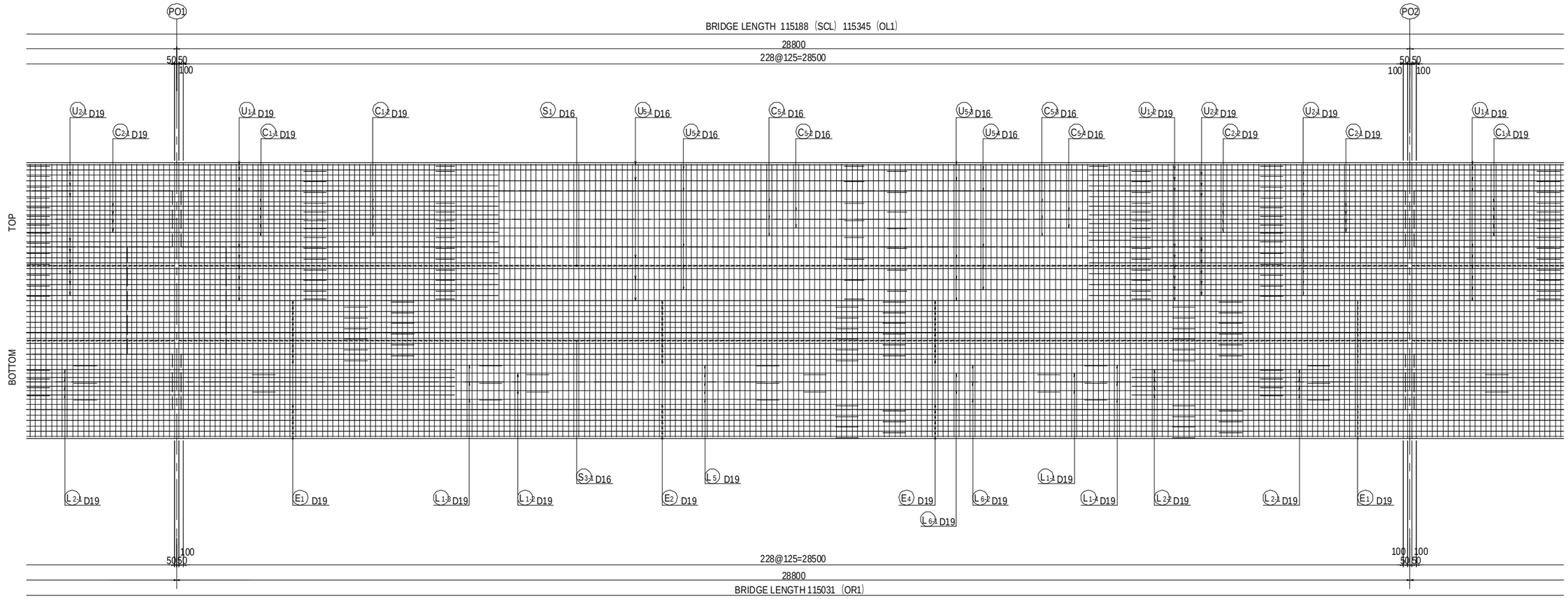


| PROJECT NAME | FINANCED BY | COUNTERPART | JICA STUDY TEAM |
|---|---|---|---|
| DETAILED DESIGN ON BAGO RIVER BRIDGE CONSTRUCTION PROJECT | JAPAN INTERNATIONAL COOPERATION AGENCY | REPUBLIC OF THE UNION OF MYANMAR MINISTRY OF CONSTRUCTION DEPARTMENT OF BRIDGE | NIPPON KOEI CO., LTD. ORIENTAL CONSULTANTS GLOBAL CO., LTD. METROPOLITAN EXPRESSWAY COMPANY LIMITED CHODAI CO.,LTD. NIPPON ENGINEERING CONSULTANTS CO.,LTD. |

| | NAME | SIGNATURE | DATE |
|---|---|---|---|
| PREPARED BY | M. OHYAMA | 大山満弘 | 15 Jun.2017 |
| CHECKED BY | T. HAYAKAWA | 早川知邦 | 20 Jun.2017 |
| APPROVED BY | Y. SANO | 佐野裕一 | 21 Jun.2017 |

| DRAWING TITLE | PACKAGE |
|---|---|
| BAR ARRANGEMENT OF SLAB FOR ON-RAMP (2) | 1 |
| | DWG No. |
| | P1-OR-1302 |

# BAR ARRANGEMENT OF SLAB FOR ON-RAMP (3)

S=1:60

## PLAN VIEW

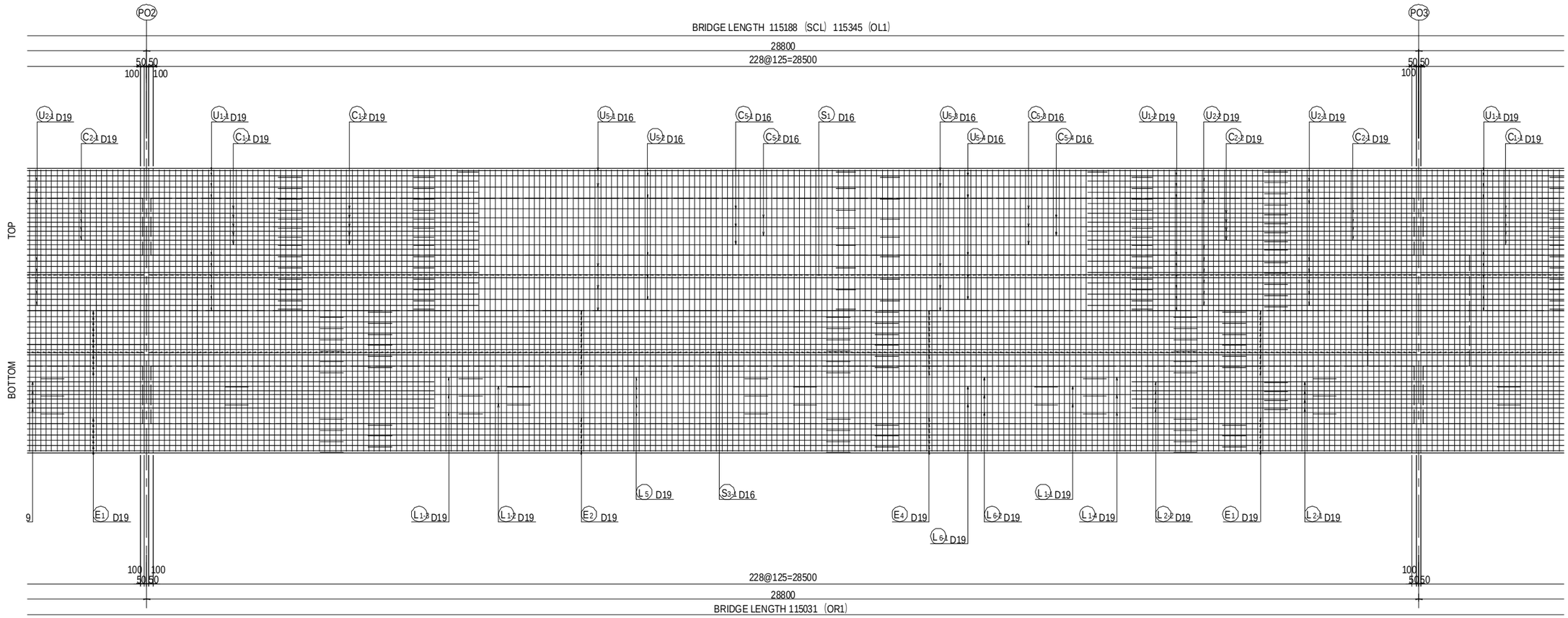


| PROJECT NAME | FINANCED BY | COUNTERPART | JICA STUDY TEAM |
|---|---|---|---|
| DETAILED DESIGN ON BAGO RIVER BRIDGE CONSTRUCTION PROJECT | JAPAN INTERNATIONAL COOPERATION AGENCY | REPUBLIC OF THE UNION OF MYANMAR MINISTRY OF CONSTRUCTION DEPARTMENT OF BRIDGE | NIPPON KOEI CO., LTD. ORIENTAL CONSULTANTS GLOBAL CO., LTD. METROPOLITAN EXPRESSWAY COMPANY LIMITED CHODAI CO.,LTD. NIPPON ENGINEERING CONSULTANTS CO.,LTD. |

| | NAME | SIGNATURE | DATE |
|---|---|---|---|
| PREPARED BY | M. OHYAMA | 大山満弘 | 15 Jun.2017 |
| CHECKED BY | T. HAYAKAWA | 早川知孝 | 20 Jun.2017 |
| APPROVED BY | Y. SANO | 佐野雄一 | 21 Jun.2017 |

DRAWING TITLE: BAR ARRANGEMENT OF SLAB FOR ON-RAMP (3)

PACKAGE: 1

DWG No.: P1-OR-1303

# BAR ARRANGEMENT OF SLAB FOR ON-RAMP (4)

S=1:100

## PLAN VIEW

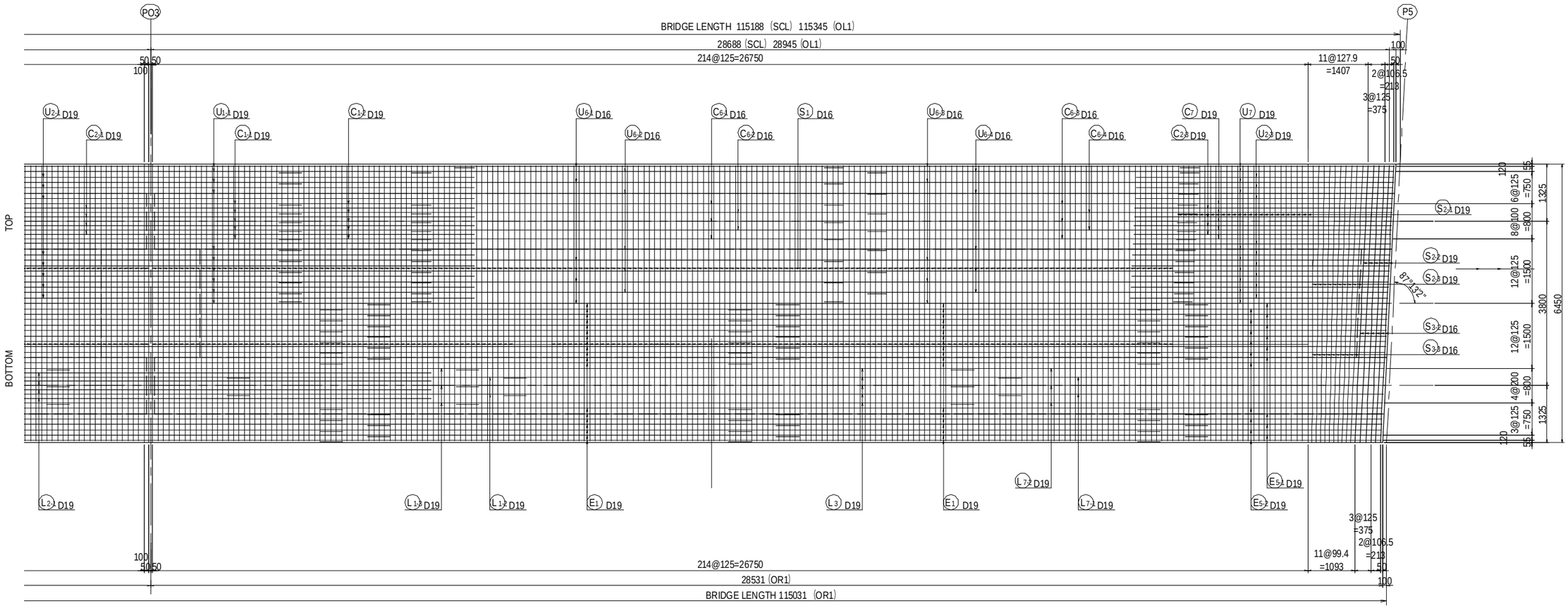


| PROJECT NAME | FINANCED BY | COUNTERPART | JICA STUDY TEAM |
|---|---|---|---|
| DETAILED DESIGN ON BAGO RIVER BRIDGE CONSTRUCTION PROJECT | JAPAN INTERNATIONAL COOPERATION AGENCY | REPUBLIC OF THE UNION OF MYANMAR MINISTRY OF CONSTRUCTION DEPARTMENT OF BRIDGE | NIPPON KOEI CO., LTD. ORIENTAL CONSULTANTS GLOBAL CO., LTD. METROPOLITAN EXPRESSWAY COMPANY LIMITED CHODAI CO.,LTD. NIPPON ENGINEERING CONSULTANTS CO.,LTD. |

| | NAME | SIGNATURE | DATE |
|---|---|---|---|
| PREPARED BY | M. OHYAMA | 大山満弘 | 15 Jun.2017 |
| CHECKED BY | T. HAYAKAWA | 早川知邦 | 20 Jun.2017 |
| APPROVED BY | Y. SANO | 佐野裕一 | 21 Jun.2017 |

| DRAWING TITLE | PACKAGE |
|---|---|
| BAR ARRANGEMENT OF SLAB FOR ON-RAMP (4) | 1 |
| | DWG No. |
| | P1-OR-1304 |

# BAR ARRANGEMENT OF SLAB FOR ON-RAMP (5) S=1:60

## CROSS SECTION

### SUPPORT SECTION (AO1)

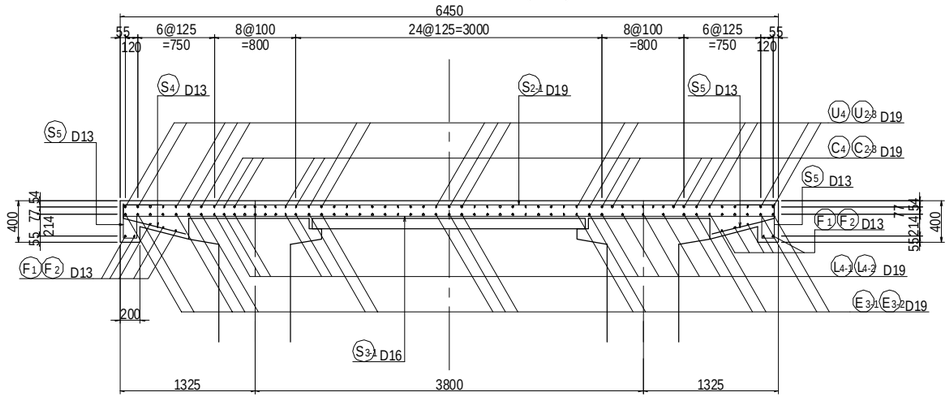


### TYPICAL SECTION

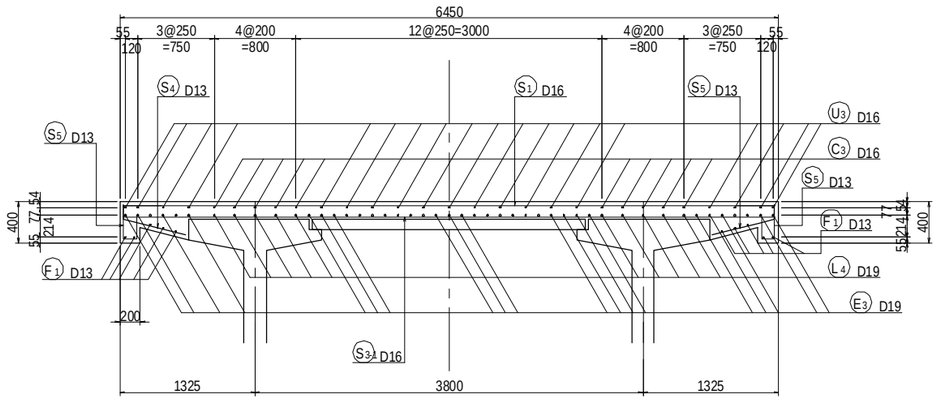


### SUPPORT SECTION (PO1)

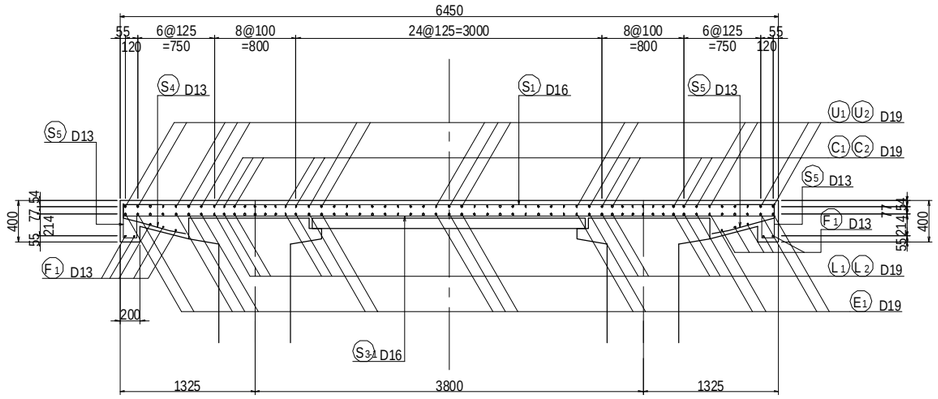


| PROJECT NAME | FINANCED BY | COUNTERPART | JICA STUDY TEAM |
|---|---|---|---|
| DETAILED DESIGN ON BAGO RIVER BRIDGE CONSTRUCTION PROJECT | JAPAN INTERNATIONAL COOPERATION AGENCY | REPUBLIC OF THE UNION OF MYANMAR MINISTRY OF CONSTRUCTION DEPARTMENT OF BRIDGE | NIPPON KOEI CO., LTD. ORIENTAL CONSULTANTS GLOBAL CO., LTD. METROPOLITAN EXPRESSWAY COMPANY LIMITED CHODAI CO.,LTD. NIPPON ENGINEERING CONSULTANTS CO.,LTD. |

| | NAME | SIGNATURE | DATE |
|---|---|---|---|
| PREPARED BY | M. OHYAMA | 大山満弘 | 15 Jun.2017 |
| CHECKED BY | T. HAYAKAWA | 早川知邦 | 20 Jun.2017 |
| APPROVED BY | Y. SANO | 佐野雅一 | 21 Jun.2017 |

| DRAWING TITLE | PACKAGE |
|---|---|
| BAR ARRANGEMENT OF SLAB FOR ON-RAMP (5) | 1 |
| | DWG No. |
| | P1-OR-1305 |

# BAR ARRANGEMENT OF SLAB FOR ON-RAMP (6)

S=1:200

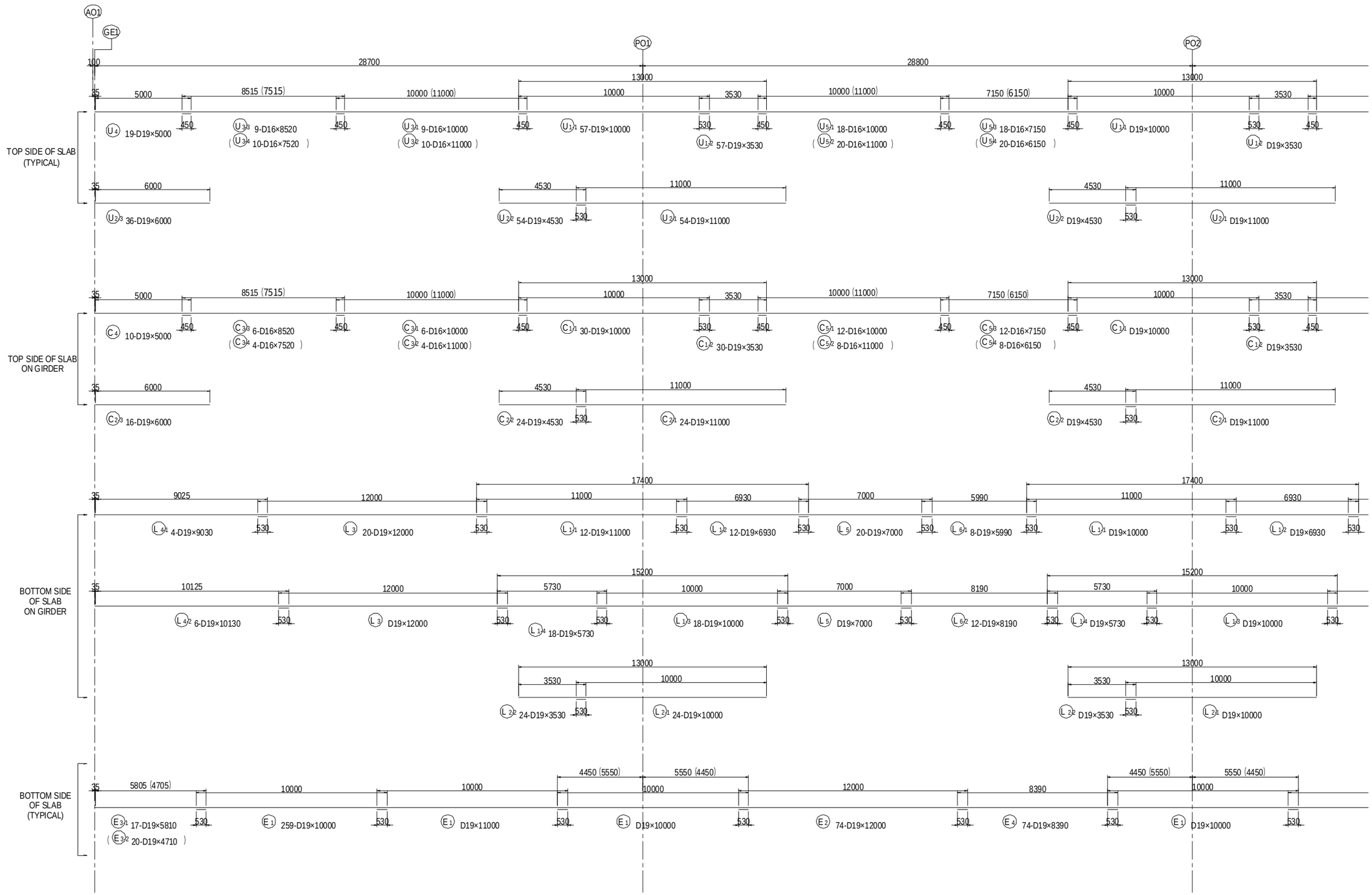


| PROJECT NAME | FINANCED BY | COUNTERPART | JICA STUDY TEAM |
|---|---|---|---|
| DETAILED DESIGN ON BAGO RIVER BRIDGE CONSTRUCTION PROJECT | JAPAN INTERNATIONAL COOPERATION AGENCY | REPUBLIC OF THE UNION OF MYANMAR MINISTRY OF CONSTRUCTION DEPARTMENT OF BRIDGE | NIPPON KOEI CO., LTD. ORIENTAL CONSULTANTS GLOBAL CO., LTD. METROPOLITAN EXPRESSWAY COMPANY LIMITED CHODAI CO.,LTD. NIPPON ENGINEERING CONSULTANTS CO.,LTD. |

| | NAME | SIGNATURE | DATE |
|---|---|---|---|
| PREPARED BY | M. OHYAMA | 大山満弘 | 15 Jun.2017 |
| CHECKED BY | T. HAYAKAWA | 早川知邦 | 20 Jun.2017 |
| APPROVED BY | Y. SANO | 佐野雅一 | 21 Jun.2017 |

| DRAWING TITLE | PACKAGE |
|---|---|
| BAR ARRANGEMENT OF SLAB FOR ON-RAMP(6) | 1 |
| | DWG No. |
| | P1-OR-1306 |

# BAR ARRANGEMENT OF SLAB FOR ON RAMP (7)

S=1:200

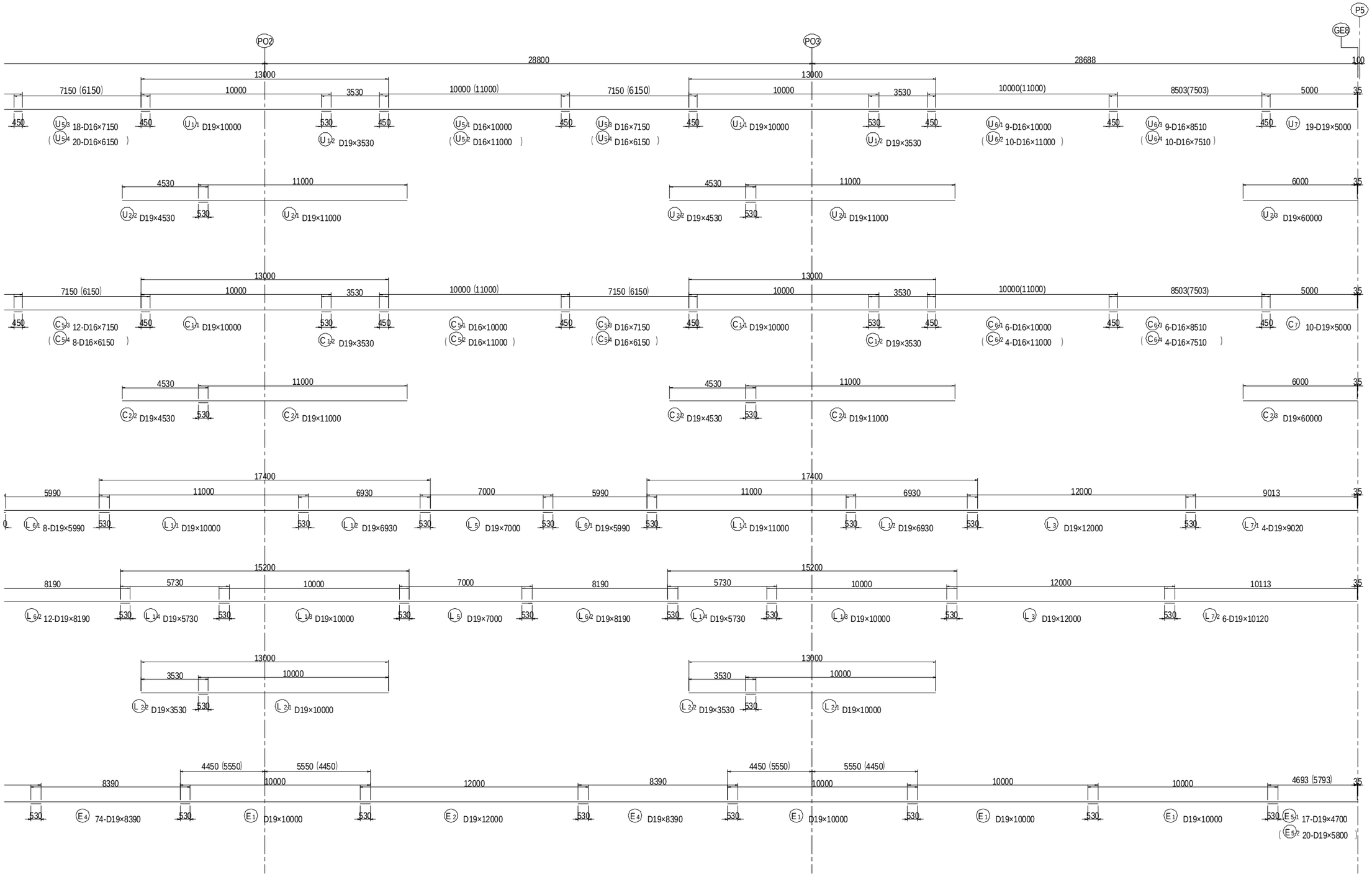


| PROJECT NAME | FINANCED BY | COUNTERPART | JICA STUDY TEAM |
|---|---|---|---|
| DETAILED DESIGN ON BAGO RIVER BRIDGE CONSTRUCTION PROJECT | JAPAN INTERNATIONAL COOPERATION AGENCY | REPUBLIC OF THE UNION OF MYANMAR MINISTRY OF CONSTRUCTION DEPARTMENT OF BRIDGE | NIPPON KOEI CO., LTD. ORIENTAL CONSULTANTS GLOBAL CO., LTD. METROPOLITAN EXPRESSWAY COMPANY LIMITED CHODAI CO.,LTD. NIPPON ENGINEERING CONSULTANTS CO.,LTD. |

| | NAME | SIGNATURE | DATE |
|---|---|---|---|
| PREPARED BY | M. OHYAMA | 大山満弘 | 15 Jun.2017 |
| CHECKED BY | T. HAYAKAWA | 早川知邦 | 20 Jun.2017 |
| APPROVED BY | Y. SANO | 佐野裕一 | 21 Jun.2017 |

DRAWING TITLE: BAR ARRANGEMENT OF SLAB FOR ON-RAMP (7)

PACKAGE: 1

DWG No.: P1-OR-1307

# BAR ARRANGEMENT OF SLAB FOR ON-RAMP (8) S=1:60

## TRANSVERSE REINFORCEMENT S=1:60

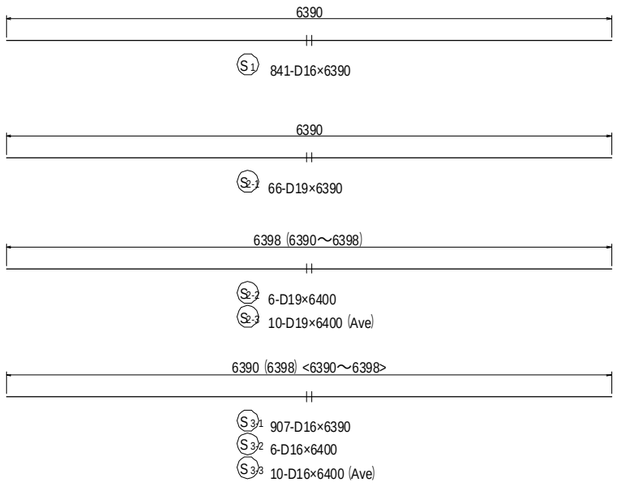


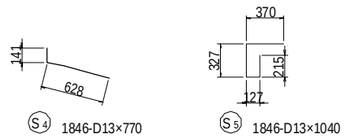


## BAR STATISTICS TABLE (For 1 Bridge)

| Bar Mark | Bar Size | Length (mm) | No.Of Bar (Nos) | Unit Wt (kg/m) | Rod Wt (kg) | Total Weight (kg) | Shape |
|---|---|---|---|---|---|---|---|
| U 1-1 | D19 | 10000 | 57 | 2.25 | 22.50 | 1 283 | — |
| 1-2 | 〃 | 3530 | 57 | 〃 | 7.94 | 453 | — |
| 2-1 | 〃 | 11000 | 54 | 〃 | 24.75 | 1 337 | — |
| 2-2 | 〃 | 4530 | 54 | 〃 | 10.19 | 550 | — |
| 2-3 | 〃 | 6000 | 36 | 〃 | 13.50 | 486 | — |
| 3-1 | D16 | 10000 | 9 | 1.56 | 15.60 | 140 | — |
| 3-2 | 〃 | 11000 | 10 | 〃 | 17.16 | 172 | — |
| 3-3 | 〃 | 8250 | 9 | 〃 | 12.87 | 116 | — |
| 3-4 | 〃 | 7520 | 10 | 〃 | 11.73 | 117 | — |
| 4 | D19 | 5000 | 19 | 2.25 | 11.25 | 214 | — |
| 5-1 | D16 | 10000 | 18 | 1.56 | 15.60 | 281 | — |
| 5-2 | 〃 | 11000 | 20 | 〃 | 17.16 | 343 | — |
| 5-3 | 〃 | 7150 | 18 | 〃 | 11.15 | 201 | — |
| 5-4 | 〃 | 6150 | 20 | 〃 | 9.59 | 192 | — |
| 6-1 | 〃 | 10000 | 9 | 〃 | 15.60 | 140 | — |
| 6-2 | 〃 | 11000 | 10 | 〃 | 17.16 | 172 | — |
| 6-3 | 〃 | 8510 | 9 | 〃 | 13.28 | 120 | — |
| 6-4 | 〃 | 7510 | 10 | 〃 | 11.72 | 117 | — |
| 7 | D19 | 5000 | 19 | 2.25 | 11.25 | 214 | — |
| | | | | | | | |
| C 1-1 | D19 | 10000 | 30 | 2.25 | 22.50 | 675 | — |
| 1-2 | 〃 | 3530 | 30 | 〃 | 7.94 | 238 | — |
| 2-1 | 〃 | 11000 | 24 | 〃 | 24.75 | 594 | — |
| 2-2 | 〃 | 4530 | 24 | 〃 | 10.19 | 245 | — |
| 2-3 | 〃 | 6000 | 16 | 〃 | 13.50 | 216 | — |
| 3-1 | D16 | 10000 | 6 | 1.56 | 15.60 | 94 | — |
| 3-2 | 〃 | 11000 | 4 | 〃 | 17.16 | 69 | — |
| 3-3 | 〃 | 8250 | 6 | 〃 | 12.87 | 77 | — |
| 3-4 | 〃 | 7520 | 4 | 〃 | 11.73 | 47 | — |
| 4 | D19 | 5000 | 10 | 2.25 | 11.25 | 113 | — |
| 5-1 | D16 | 10000 | 12 | 1.56 | 15.60 | 187 | — |
| 5-2 | 〃 | 11000 | 8 | 〃 | 17.16 | 137 | — |
| 5-3 | 〃 | 7150 | 12 | 〃 | 11.15 | 134 | — |
| 5-4 | 〃 | 6150 | 8 | 〃 | 9.59 | 77 | — |
| 6-1 | 〃 | 10000 | 6 | 〃 | 15.60 | 94 | — |
| 6-2 | 〃 | 11000 | 4 | 〃 | 17.16 | 69 | — |
| 6-3 | 〃 | 8510 | 6 | 〃 | 13.28 | 80 | — |
| 6-4 | 〃 | 7510 | 4 | 〃 | 11.72 | 47 | — |
| 7 | D19 | 5000 | 10 | 2.25 | 11.25 | 113 | — |
| | | | | | | | |
| L 1-1 | D19 | 11000 | 12 | 2.25 | 24.75 | 297 | — |
| 1-2 | 〃 | 6930 | 12 | 2.25 | 15.59 | 187 | — |
| 1-3 | 〃 | 10000 | 18 | 2.25 | 22.50 | 405 | — |
| 1-4 | 〃 | 5730 | 18 | 2.25 | 12.89 | 232 | — |
| 2-1 | 〃 | 10000 | 24 | 2.25 | 22.50 | 540 | — |
| 2-2 | 〃 | 3530 | 24 | 2.25 | 7.94 | 191 | — |

## BAR STATISTICS TABLE (For 1 Bridge)

| Bar Mark | Bar Size | Length (mm) | No.Of Bar (Nos) | Unit Wt (kg/m) | Rod Wt (kg) | Total Weight (kg) | Shape |
|---|---|---|---|---|---|---|---|
| L 3 | D19 | 12000 | 20 | 2.25 | 27.00 | 540 | — |
| 4-1 | 〃 | 9030 | 4 | 〃 | 20.32 | 81 | — |
| 4-2 | D19 | 10130 | 6 | 2.25 | 22.79 | 137 | — |
| 5 | D19 | 7000 | 20 | 2.25 | 15.75 | 315 | — |
| 6-1 | D19 | 5990 | 8 | 2.25 | 13.48 | 108 | — |
| 6-2 | D19 | 8190 | 12 | 2.25 | 18.43 | 221 | — |
| 7-1 | 〃 | 9020 | 4 | 〃 | 20.30 | 81 | — |
| 7-2 | D19 | 10120 | 6 | 2.25 | 22.77 | 137 | — |
| | | | | | | | |
| E 1 | D19 | 10000 | 259 | 2.25 | 22.50 | 5 828 | — |
| 2 | D19 | 12000 | 74 | 2.25 | 27.00 | 1 998 | — |
| 3-1 | D19 | 5810 | 17 | 2.25 | 13.07 | 222 | — |
| 3-2 | D19 | 4710 | 20 | 2.25 | 10.60 | 212 | — |
| 4 | D19 | 8390 | 74 | 2.25 | 18.88 | 1 397 | — |
| 5-1 | D19 | 4700 | 17 | 2.25 | 10.58 | 180 | — |
| 5-2 | D19 | 5800 | 20 | 2.25 | 13.05 | 261 | — |
| | | | | | | | |
| S 1 | D16 | 6390 | 841 | 1.56 | 9.97 | 8 385 | — |
| 2-1 | D19 | 6390 | 66 | 2.25 | 14.38 | 949 | — |
| 2-2 | 〃 | 6400 | 6 | 〃 | 14.40 | 86 | — |
| 2-3 | 〃 | 6400 | 10 | 〃 | 14.40 | 144 | — (Ave) |
| 3-1 | D16 | 6390 | 907 | 1.56 | 9.97 | 9 043 | — |
| 3-2 | 〃 | 6400 | 6 | 〃 | 9.98 | 60 | — (Ave) |
| 3-3 | 〃 | 6400 | 10 | 〃 | 9.98 | 100 | — |
| 4 | D13 | 770 | 1846 | 0.995 | 0.77 | 1 421 | ⌐ |
| 5 | 〃 | 1040 | 1846 | 〃 | 1.03 | 1 901 | ⌐ |
| | | | | | | | |
| F 1 | D13 | 12000 | 90 | 0.995 | 11.94 | 1 075 | — |
| 2 | D13 | 10250 | 10 | 0.995 | 10.20 | 102 | — |

| | | |
|---|---|---|
| D13 | 4499 | kg |
| D16 | 20811 | kg |
| D19 | 21480 | kg |
| Total Weight | 46790 | kg |

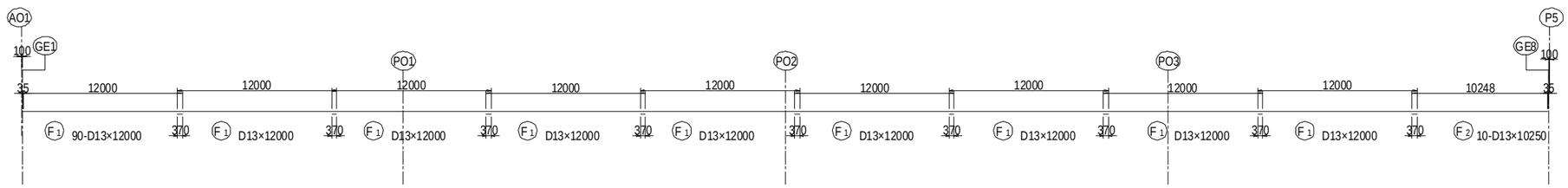


| PROJECT NAME | FINANCED BY | COUNTERPART | JICA STUDY TEAM |
|---|---|---|---|
| DETAILED DESIGN ON BAGO RIVER BRIDGE CONSTRUCTION PROJECT | JAPAN INTERNATIONAL COOPERATION AGENCY | REPUBLIC OF THE UNION OF MYANMAR MINISTRY OF CONSTRUCTION DEPARTMENT OF BRIDGE | NIPPON KOEI CO., LTD. ORIENTAL CONSULTANTS GLOBAL CO., LTD. METROPOLITAN EXPRESSWAY COMPANY LIMITED CHODAI CO.,LTD. NIPPON ENGINEERING CONSULTANTS CO.,LTD. |

| | NAME | SIGNATURE | DATE |
|---|---|---|---|
| PREPARED BY | M. OHYAMA | 大山満弘 | 15 Jun.2017 |
| CHECKED BY | T. HAYAKAWA | 早川知邦 | 20 Jun.2017 |
| APPROVED BY | Y. SANO | 佐野統一 | 21 Jun.2017 |

| DRAWING TITLE | PACKAGE |
|---|---|
| BAR ARRANGEMENT OF SLAB FOR ON-RAMP (8) | 1 |
| | DWG No. |
| | P1-OR-1308 |

# BAR ARRANGEMENT OF CROSS BEAM FOR ON-RAMP (1)

S=1:60

## CROSS SECTION

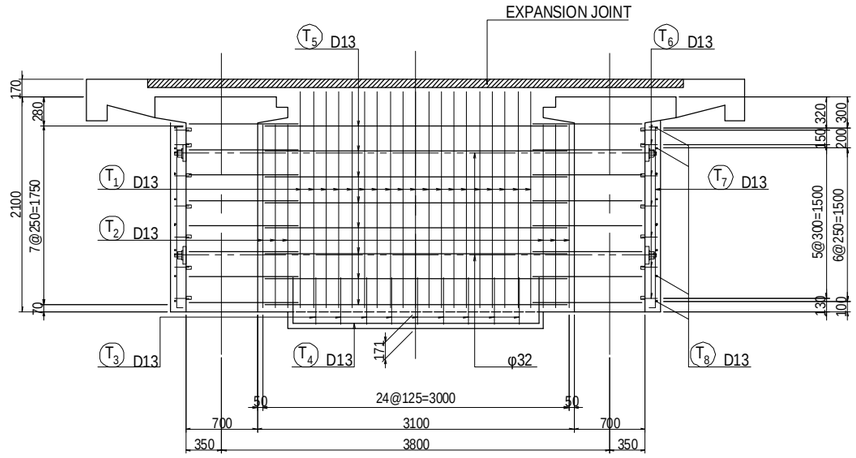


## SIDE ELEVATION

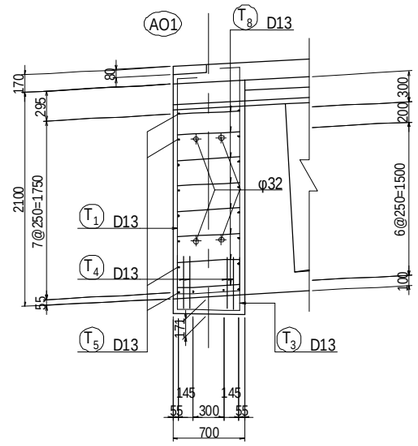


## PLAN VIEW

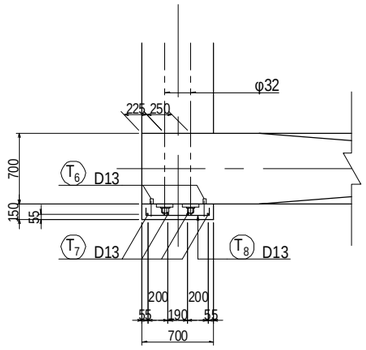


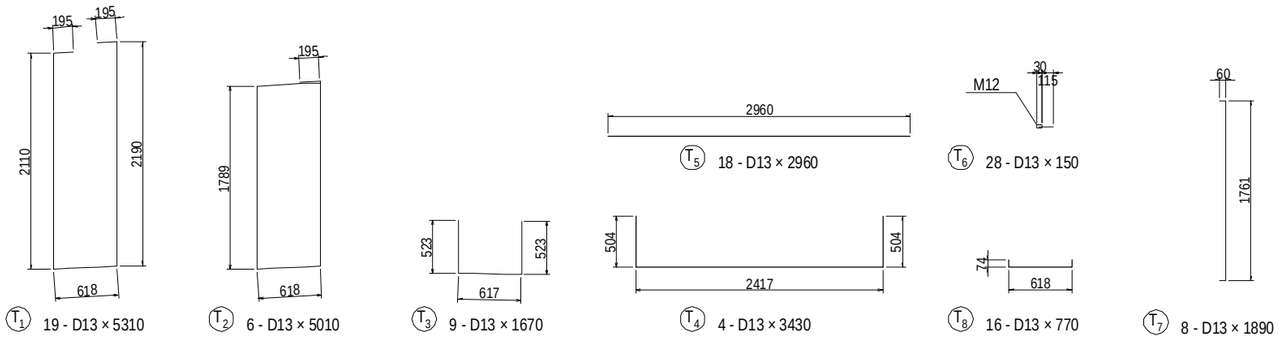


## BAR STATISTICS TABLE

(For 1 Cross beam)

| Bar Mark | Bar Size | Length (mm) | No.Of Bar (Nos) | Unit Wt (kg/m) | Rod Wt (kg) | Total Weight (kg) | Shape |
|---|---|---|---|---|---|---|---|
| T 1 | D13 | 5310 | 19 | 0.995 | 5.28 | 100 | |
| 2 | D13 | 5010 | 6 | 0.995 | 4.98 | 30 | |
| 3 | D13 | 1670 | 9 | 0.995 | 1.66 | 15 | |
| 4 | D13 | 3430 | 4 | 0.995 | 3.41 | 14 | |
| 5 | D13 | 2960 | 18 | 0.995 | 2.95 | 53 | |
| 6 | D13 | 150 | 28 | 0.995 | 0.15 | 4 | |
| 7 | D13 | 1890 | 8 | 0.995 | 1.88 | 15 | |
| 8 | D13 | 770 | 16 | 0.995 | 0.77 | 12 | |
| Total Weight | | 243 kg | | | | | |

Notes:
- Unless otherwise indicated in drawing, transverse PC bars shall be tensioned from one side alternately.
- Reinforcement for tendon anchorage such as grid rebar shall be arranged sufficiently.
- 800 N/mm2 is assumed as jacking force of φ32mm in design stage. Jacking force considering jacking sequence shall be indicated on shop drawings and shall be approved by Engineer.

| PROJECT NAME | FINANCED BY | COUNTERPART | JICA STUDY TEAM |
|---|---|---|---|
| DETAILED DESIGN ON BAGO RIVER BRIDGE CONSTRUCTION PROJECT | JAPAN INTERNATIONAL COOPERATION AGENCY | REPUBLIC OF THE UNION OF MYANMAR MINISTRY OF CONSTRUCTION DEPARTMENT OF BRIDGE | NIPPON KOEI CO., LTD. ORIENTAL CONSULTANTS GLOBAL CO., LTD. METROPOLITAN EXPRESSWAY COMPANY LIMITED CHODAI CO.,LTD. NIPPON ENGINEERING CONSULTANTS CO.,LTD. |

| | NAME | SIGNATURE | DATE | DRAWING TITLE | PACKAGE |
|---|---|---|---|---|---|
| PREPARED BY | M. OHYAMA | | 15 Jun.2017 | BAR ARRANGEMENT OF CROSS BEAM FOR ON-RAMP (1) | 1 |
| CHECKED BY | T. HAYAKAWA | | 20 Jun.2017 | | DWG No. |
| APPROVED BY | Y. SANO | | 21 Jun.2017 | | P1-OR-1401 |

# BAR ARRANGEMENT OF CROSS BEAM FOR ON-RAMP (2)

S=1:60

## CROSS SECTION

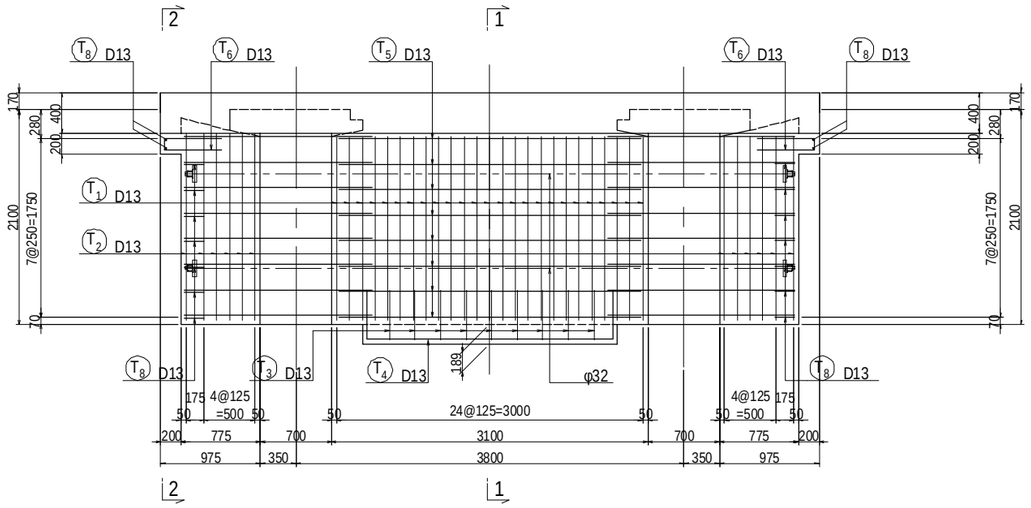


## SIDE ELEVATION 1 - 1

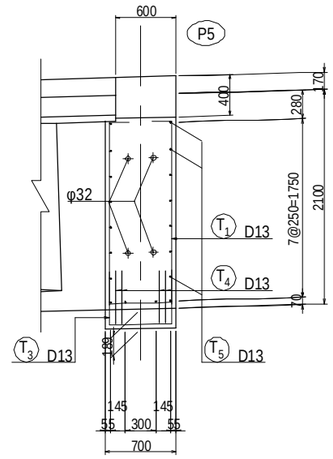


## PLAN VIEW

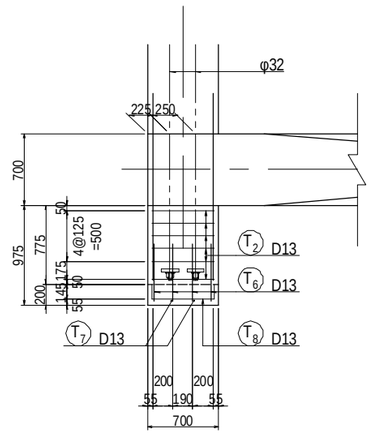


## SIDE ELEVATION 2 - 2

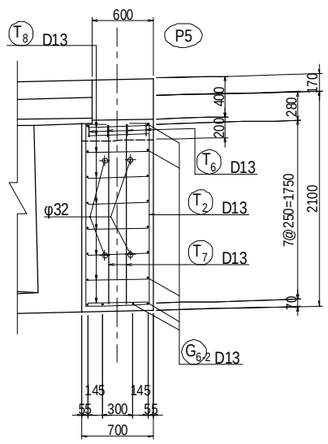


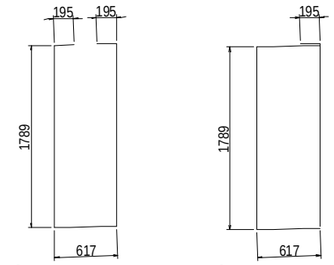


T1 25 - D13 × 4590




T2 12 - D13 × 5010


T3 9 - D13 × 1670

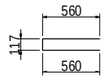


T6 8 - D13 × 1240


T7 4 - D13 × 2140

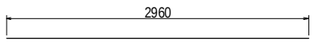


T5 18 - D13 × 2960

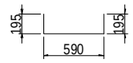


T8 18 - D13 × 980

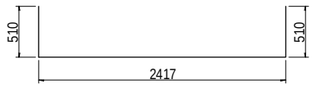


T4 4 - D13 × 3440

## BAR STATISTICS TABLE

(For 1 Cross beam)

| Bar Mark | Bar Size | Length (mm) | No.Of Bar (Nos) | Unit Wt (kg/m) | Rod Wt (kg) | Total Weight (kg) | Shape |
|---|---|---|---|---|---|---|---|
| T 1 | D13 | 4590 | 25 | 0.995 | 4.57 | 114 | |
| 2 | D13 | 5010 | 12 | 0.995 | 4.98 | 60 | |
| 3 | D13 | 1670 | 9 | 0.995 | 1.66 | 15 | |
| 4 | D13 | 3430 | 4 | 0.995 | 3.41 | 14 | |
| 5 | D13 | 2960 | 18 | 0.995 | 2.95 | 53 | |
| 6 | D13 | 1240 | 8 | 0.995 | 1.23 | 10 | |
| 7 | D13 | 2140 | 4 | 0.995 | 2.13 | 9 | |
| 8 | D13 | 980 | 18 | 0.995 | 0.98 | 18 | |
| Total Weight | | 293 kg | | | | | |

Notes:
- Unless otherwise indicated in drawing, transverse PC bars shall be tensioned from one side alternately.
- Reinforcement for tendon anchorage such as grid rebar shall be arranged sufficiently.
- 800 N/mm2 is assumed as jacking force of φ32mm in design stage. Jacking force considering jacking sequence shall be indicated on shop drawings and shall be approved by Engineer.

| PROJECT NAME | FINANCED BY | COUNTERPART | JICA STUDY TEAM |
|---|---|---|---|
| DETAILED DESIGN ON BAGO RIVER BRIDGE CONSTRUCTION PROJECT | JAPAN INTERNATIONAL COOPERATION AGENCY | REPUBLIC OF THE UNION OF MYANMAR MINISTRY OF CONSTRUCTION DEPARTMENT OF BRIDGE | NIPPON KOEI CO., LTD. ORIENTAL CONSULTANTS GLOBAL CO., LTD. METROPOLITAN EXPRESSWAY COMPANY LIMITED CHODAI CO.,LTD. NIPPON ENGINEERING CONSULTANTS CO.,LTD. |

| | NAME | SIGNATURE | DATE |
|---|---|---|---|
| PREPARED BY | M. OHYAMA | 大山満弘 | 15 Jun.2017 |
| CHECKED BY | T. HAYAKAWA | 早川知彦 | 20 Jun.2017 |
| APPROVED BY | Y. SANO | 佐野統一 | 21 Jun.2017 |

DRAWING TITLE: BAR ARRANGEMENT OF CROSS BEAM FOR ON-RAMP (2)

PACKAGE: 1

DWG No.: P1-OR-1402

# BAR ARRANGEMENT OF CROSS BEAM FOR ON-RAMP (3) S=1:60

## CROSS SECTION

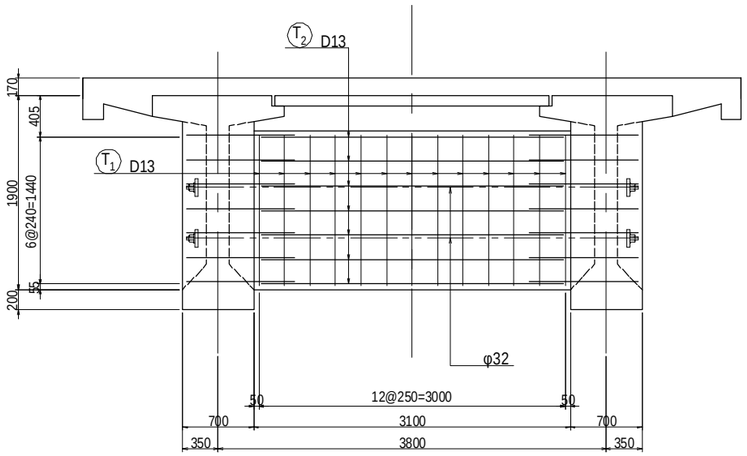


## SIDE ELEVATION

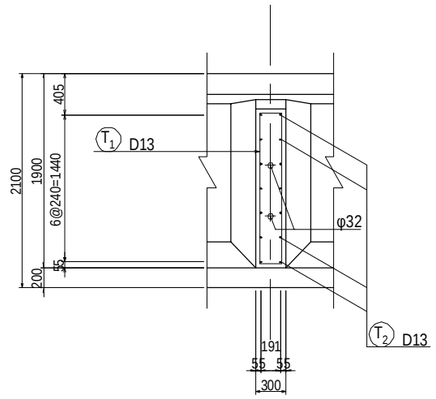


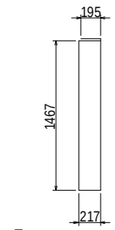


T1 13 - D13 × 3570

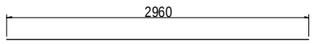


T2 14 - D13 × 2960

## BAR STATISTICS TABLE

(For 1 Cross beam)

| Bar Mark | Bar Size | Length (mm) | No.Of Bar (Nos) | Unit Wt (kg/m) | Rod Wt (kg) | Total Weight (kg) | Shape |
|---|---|---|---|---|---|---|---|
| T 1 | D13 | 3570 | 13 | 0.995 | 3.55 | 46 | |
| 2 | D13 | 2960 | 14 | 0.995 | 2.95 | 41 | |
| Total Weight | | | | 87 kg | | | |

Notes:
- Unless otherwise indicated in drawing, transverse PC bars shall be tensioned from one side alternately.
- Reinforcement for tendon anchorage such as grid rebar shall be arranged sufficiently.
- 800 N/mm2 is assumed as jacking force of φ32mm in design stage. Jacking force considering jacking sequence shall be indicated on shop drawings and shall be approved by Engineer.

| PROJECT NAME | FINANCED BY | COUNTERPART | JICA STUDY TEAM |
|---|---|---|---|
| DETAILED DESIGN ON BAGO RIVER BRIDGE CONSTRUCTION PROJECT | JAPAN INTERNATIONAL COOPERATION AGENCY | REPUBLIC OF THE UNION OF MYANMAR MINISTRY OF CONSTRUCTION DEPARTMENT OF BRIDGE | NIPPON KOEI CO., LTD. ORIENTAL CONSULTANTS GLOBAL CO., LTD. METROPOLITAN EXPRESSWAY COMPANY LIMITED CHODAI CO.,LTD. NIPPON ENGINEERING CONSULTANTS CO.,LTD. |

| | NAME | SIGNATURE | DATE | DRAWING TITLE | PACKAGE |
|---|---|---|---|---|---|
| PREPARED BY | M. OHYAMA | 大山満弘 | 15 Jun.2017 | BAR ARRANGEMENT OF CROSS BEAM FOR ON-RAMP (3) | 1 |
| CHECKED BY | T. HAYAKAWA | 早川知邦 | 20 Jun.2017 | | DWG No. |
| APPROVED BY | Y. SANO | 佐野裕一 | 21 Jun.2017 | | P1-OR-1403 |

# BAR ARRANGEMENT OF CROSS BEAM FOR ON-RAMP (4) S=1:60

## CROSS SECTION S=1:60

1 - 1

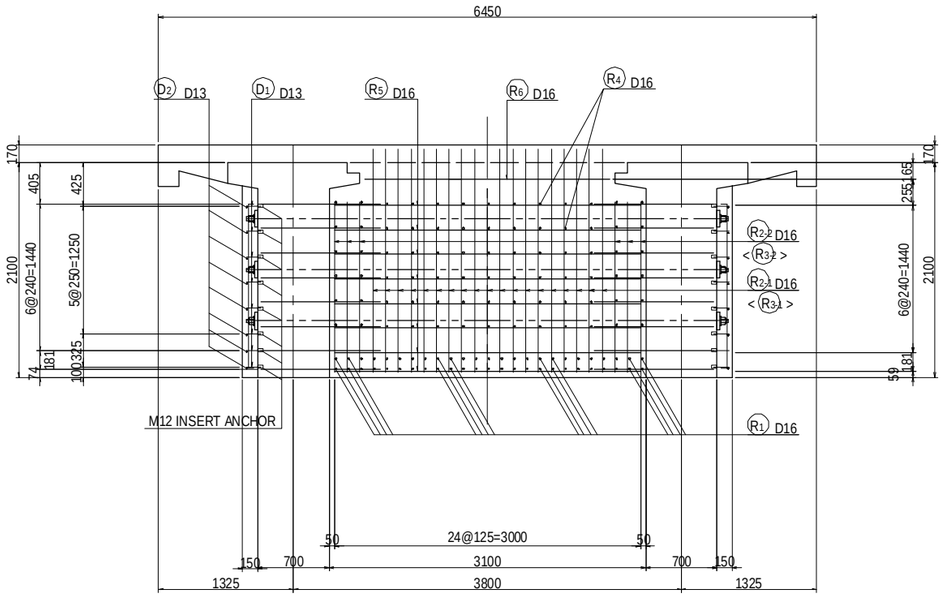


2 - 2

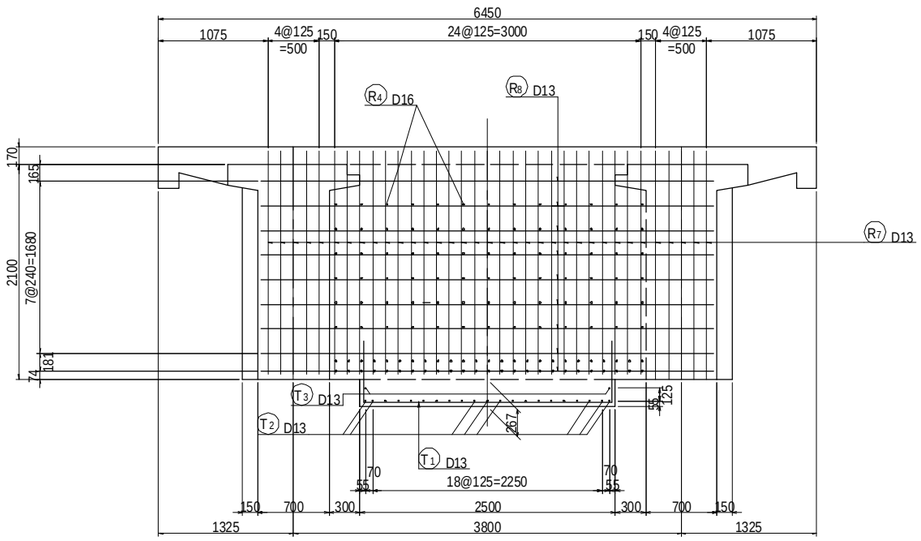


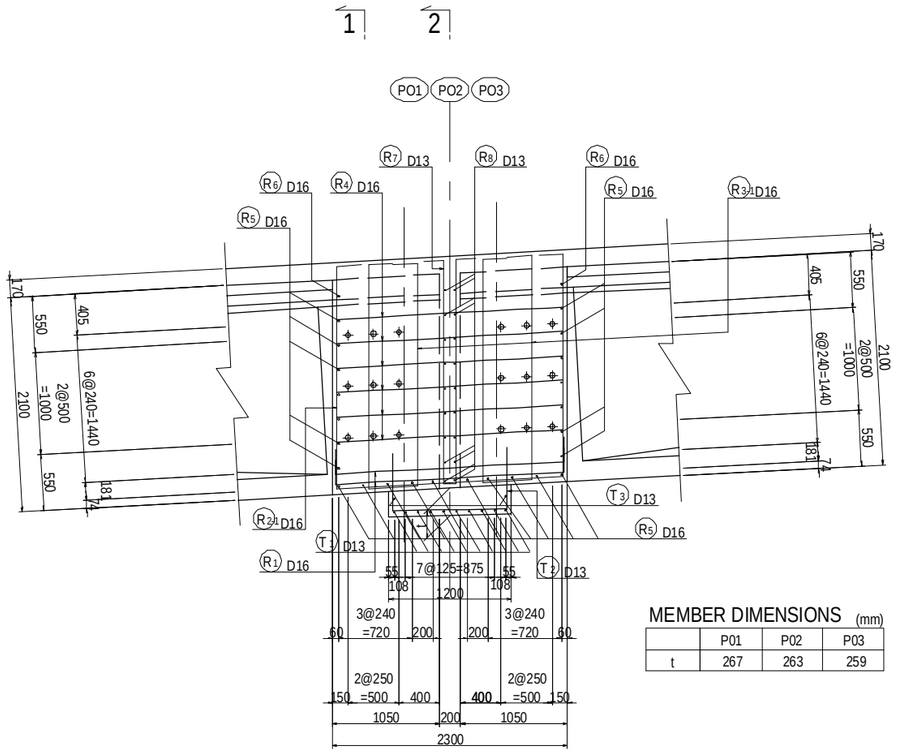


## MEMBER DIMENSIONS (mm)

| | P01 | P02 | P03 |
|---|---|---|---|
| t | 267 | 263 | 259 |

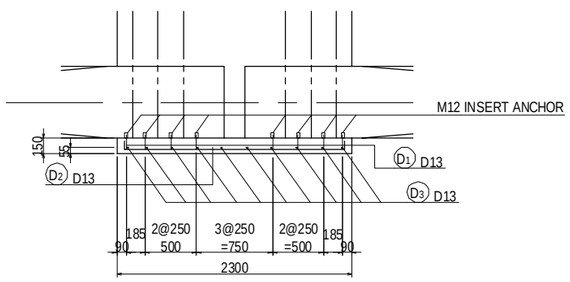


Notes:
- Unless otherwise indicated in drawing, transverse PC bars shall be tensioned from one side alternately.
- Reinforcement for tendon anchorage such as grid rebar shall be arranged sufficiently.
- 800 N/mm2 is assumed as jacking force of φ32mm in design stage. Jacking force considering jacking sequence shall be indicated on shop drawings and shall be approved by Engineer.

| PROJECT NAME | FINANCED BY | COUNTERPART | JICA STUDY TEAM |
|---|---|---|---|
| DETAILED DESIGN ON BAGO RIVER BRIDGE CONSTRUCTION PROJECT | JAPAN INTERNATIONAL COOPERATION AGENCY | REPUBLIC OF THE UNION OF MYANMAR MINISTRY OF CONSTRUCTION DEPARTMENT OF BRIDGE | NIPPON KOEI CO., LTD. ORIENTAL CONSULTANTS GLOBAL CO., LTD. METROPOLITAN EXPRESSWAY COMPANY LIMITED CHODAI CO.,LTD. NIPPON ENGINEERING CONSULTANTS CO.,LTD. |

| | NAME | SIGNATURE | DATE | DRAWING TITLE | PACKAGE |
|---|---|---|---|---|---|
| PREPARED BY | M. OHYAMA | 大山 満弘 | 15 Jun.2017 | BAR ARRANGEMENT OF CROSS BEAM FOR ON-RAMP (4) | 1 |
| CHECKED BY | T. HAYAKAWA | 早川 知平 | 20 Jun.2017 | | DWG No. |
| APPROVED BY | Y. SANO | 佐野 裕一 | 21 Jun.2017 | | P1-OR-1404 |

# BAR ARRANGEMENT OF CROSS BEAM FOR ON-RAMP (5)

S=1:60

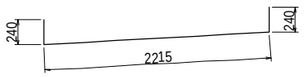


R1 50-D16×2700

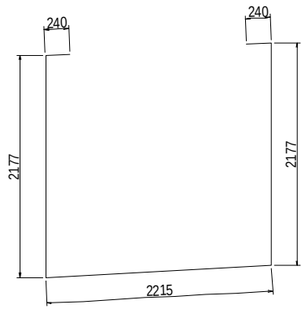


R2-1 19-D16×7050

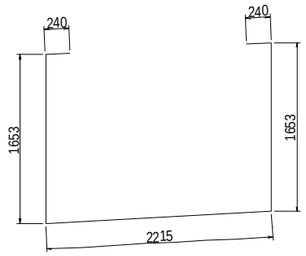


R2-2 6-D16×6010

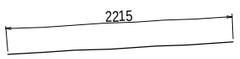


R4 78-D16×2220

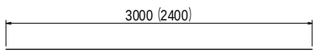


R5 24-D16×3000
R6 2-D16×2400

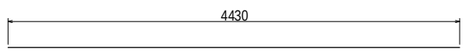


R8 18-D13×4430

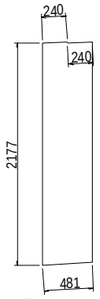


R3-1 38-D16×5320

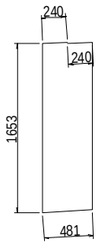


R3-2 12-D16×4270

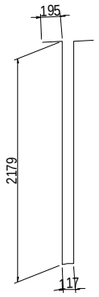


R7 35-D13×4870

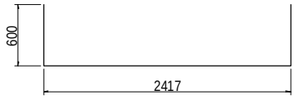


T1 10-D13×3620

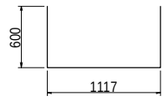


T2 21-D13×2320

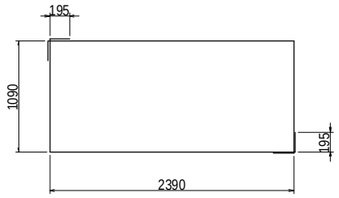


T3 2-D13×3870

## DIAPHRAGM

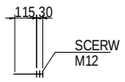


D1 44-D13×150

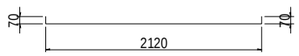


D2 16-D13×2260


D3 20-D13×1700

## BAR STATISTICS TABLE

(For 1 Cross Beam)

| Bar Mark | Bar Size | Length (mm) | No.Of Bar (Nos) | Unit Wt (kg/m) | Rod Wt (kg) | Total Weight (kg) | Shape |
|---|---|---|---|---|---|---|---|
| R 1 | D16 | 2700 | 50 | 1.56 | 4.21 | 211 | |
| 2-1 | 〃 | 7050 | 19 | 〃 | 11.00 | 209 | |
| 2-2 | 〃 | 6010 | 6 | 〃 | 9.38 | 56 | |
| 3-1 | 〃 | 5320 | 38 | 〃 | 8.30 | 315 | |
| 3-2 | 〃 | 4270 | 12 | 〃 | 6.66 | 80 | |
| 4 | 〃 | 2220 | 78 | 〃 | 3.46 | 270 | |
| 5 | 〃 | 3000 | 24 | 〃 | 4.68 | 112 | |
| 6 | 〃 | 2400 | 2 | 〃 | 3.74 | 7 | |
| 7 | D13 | 4870 | 35 | 0.995 | 4.85 | 170 | |
| 8 | 〃 | 4430 | 18 | 〃 | 4.41 | 79 | |
| T 1 | D13 | 3620 | 10 | 0.995 | 3.60 | 36 | |
| 2 | 〃 | 2320 | 21 | 〃 | 2.31 | 49 | |
| 3 | 〃 | 3870 | 2 | 〃 | 3.85 | 8 | |
| D 1 | D13 | 150 | 44 | 0.995 | 0.15 | 7 | |
| 2 | 〃 | 2260 | 16 | 〃 | 2.25 | 36 | |
| 3 | 〃 | 1700 | 20 | 〃 | 1.69 | 34 | |
| | | | | D13 | 419 | kg | |
| | | | | D16 | 1260 | kg | |
| | | | | Total Weight | 1679 | kg | |

| PROJECT NAME | FINANCED BY | COUNTERPART | JICA STUDY TEAM |
|---|---|---|---|
| DETAILED DESIGN ON BAGO RIVER BRIDGE CONSTRUCTION PROJECT | JAPAN INTERNATIONAL COOPERATION AGENCY | REPUBLIC OF THE UNION OF MYANMAR MINISTRY OF CONSTRUCTION DEPARTMENT OF BRIDGE | NIPPON KOEI CO., LTD. ORIENTAL CONSULTANTS GLOBAL CO., LTD. METROPOLITAN EXPRESSWAY COMPANY LIMITED CHODAI CO.,LTD. NIPPON ENGINEERING CONSULTANTS CO.,LTD. |

| | NAME | SIGNATURE | DATE |
|---|---|---|---|
| PREPARED BY | M. OHYAMA | 大山満弘 | 15 Jun.2017 |
| CHECKED BY | T. HAYAKAWA | 早川知邦 | 20 Jun.2017 |
| APPROVED BY | Y. SANO | 佐野雅一 | 21 Jun.2017 |

DRAWING TITLE: BAR ARRANGEMENT OF CROSS BEAM FOR ON-RAMP (5)

PACKAGE: 1

DWG No.: P1-OR-1405

# BAR ARRANGEMENT OF PC-BOARD FOR ON-RAMP

## PC-BOARD ( TYPE-A ) N=100 S=1:40

SIDE ELEVATION

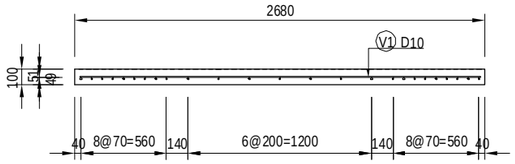


SECTION 1-1

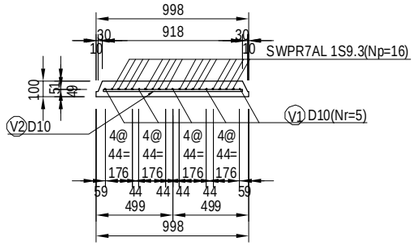


PLAN VIEW

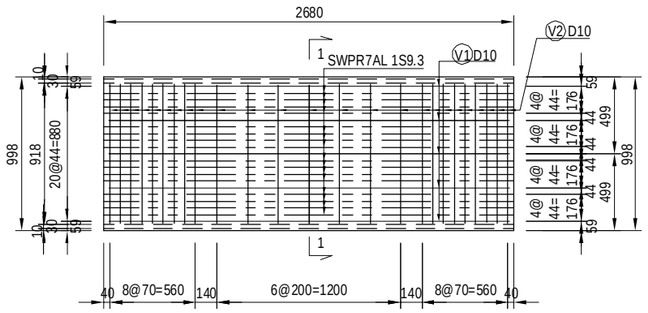


## PC-BOARD ( TYPE-B,C,D&E ) S=1:40

SIDE ELEVATION

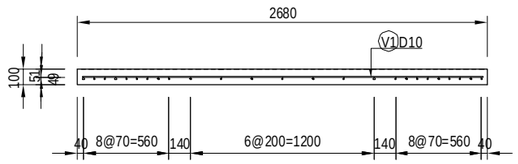


SECTION 1-1

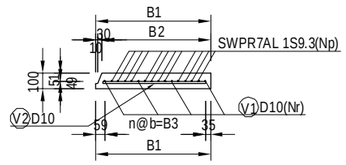


PLAN VIEW

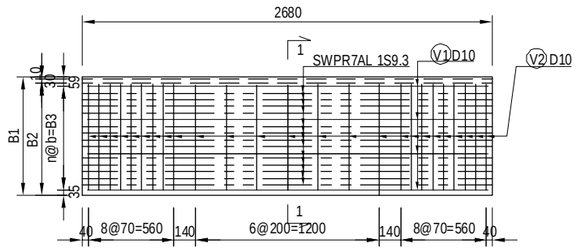


| PC-BOARD TYPE | B1 | B2 | B3 | n (SPACING) | Np (PC-TENDON) | Nr (REBAR) | b | N |
|---|---|---|---|---|---|---|---|---|
| B | 944 | 904 | 850 | 20 | 16 | 5 | 42.50 | 2 |
| C | 769 | 729 | 675 | 16 | 13 | 4 | 42.19 | 2 |
| D | 761 | 721 | 667 | 16 | 13 | 4 | 41.69 | 2 |
| E | 923 | 883 | 829 | 19 | 15 | 5 | 43.63 | 1 |

## PC-BOARD ( TYPE-F ) N=1 S=1:40

SIDE ELEVATION

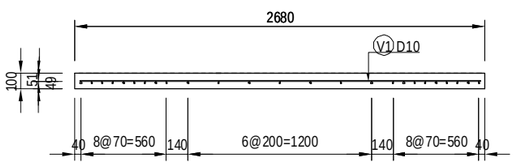


SECTION 1-1

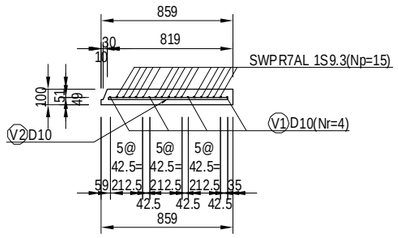


PLAN VIEW

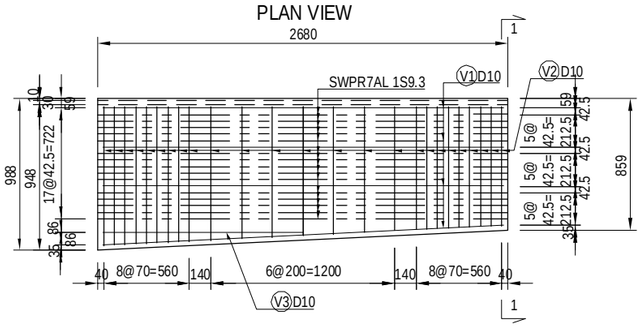


## BAR STATISTICS TABLE

| PC-BOARD TYPE | REBAR NAME | DIA (mm) | LENGTH (mm) | NO. | UNIT WEIGHT (kg/m) | WEIGHT PER UNIT (kg) | WEIGHT (kg) | REMARKS |
|---|---|---|---|---|---|---|---|---|
| TYPE-A | V1 | D 10 | 2 620 | 5 | 0.560 | 1.467 | 7.3 | |
| | V2 | D 10 | 906 | 25 | 0.560 | 0.507 | 12.7 | |
| | | | | | | TOTAL | 20.0 | |
| TYPE-B | V1 | D 10 | 2 620 | 5 | 0.560 | 1.467 | 7.3 | |
| | V2 | D 10 | 868 | 25 | 0.560 | 0.486 | 12.2 | |
| | | | | | | TOTAL | 19.5 | |
| TYPE-C | V1 | D 10 | 2 620 | 4 | 0.560 | 1.467 | 5.9 | |
| | V2 | D 10 | 693 | 25 | 0.560 | 0.388 | 9.7 | |
| | | | | | | TOTAL | 15.6 | |
| TYPE-D | V1 | D 10 | 2 620 | 4 | 0.560 | 1.467 | 5.9 | |
| | V2 | D 10 | 685 | 25 | 0.560 | 0.384 | 9.6 | |
| | | | | | | TOTAL | 15.5 | |
| TYPE-E | V1 | D 10 | 2 620 | 5 | 0.560 | 1.467 | 7.3 | |
| | V2 | D 10 | 847 | 25 | 0.560 | 0.474 | 11.9 | |
| | | | | | | TOTAL | 19.2 | |
| TYPE-F | V1 | D 10 | 2 620 | 4 | 0.560 | 1.467 | 5.9 | |
| | V2 | D 10 | 847 | 25 | 0.560 | 0.474 | 11.9 | |
| | V3 | D 10 | 1 310 | 1 | 0.560 | 0.734 | 0.7 | |
| | | | | | | TOTAL | 18.5 | |

| PC-BOARD | NUMBERS | UNIT QTY | TOTAL (kg) |
|---|---|---|---|
| TYPE-A | 100 | 20.0 | 2 000.0 |
| TYPE-B | 2 | 19.5 | 39.0 |
| TYPE-C | 2 | 15.6 | 31.2 |
| TYPE-D | 2 | 15.5 | 31.0 |
| TYPE-E | 1 | 19.2 | 19.2 |
| TYPE-F | 1 | 18.5 | 18.5 |
| | | TOTAL | 2 138.9 |

## PC TENDON QUANTITY

| PC-BOARD TYPE | STRAND TYPE | LENGTH (mm) | NO. | UNIT WEIGHT (kg/m) | WEIGHT PER UNIT (kg) | WEIGHT (kg) | REMARKS |
|---|---|---|---|---|---|---|---|
| TYPE-A | SWPR7AL 1S9.3 | 2 680 | 16 | 0.405 | 1.085 | 17.4 | |
| | | | | | TOTAL | 17.4 | |
| TYPE-B | SWPR7AL 1S9.3 | 2 680 | 16 | 0.405 | 1.085 | 17.4 | |
| | | | | | TOTAL | 17.4 | |
| TYPE-C | SWPR7AL 1S9.3 | 2 680 | 13 | 0.405 | 1.085 | 14.1 | |
| | | | | | TOTAL | 14.1 | |
| TYPE-D | SWPR7AL 1S9.3 | 2 680 | 13 | 0.405 | 1.085 | 14.1 | |
| | | | | | TOTAL | 14.1 | |
| TYPE-E | SWPR7AL 1S9.3 | 2 680 | 15 | 0.405 | 1.085 | 16.3 | |
| | | | | | TOTAL | 16.3 | |
| TYPE-F | SWPR7AL 1S9.3 | 2 680 | 15 | 0.405 | 1.085 | 16.3 | |
| | | | | | TOTAL | 16.3 | |

| PC-BOARD | NUMBERS | UNIT QTY | TOTAL (kg) |
|---|---|---|---|
| TYPE-A | 100 | 17.4 | 1 740.0 |
| TYPE-B | 2 | 17.4 | 34.8 |
| TYPE-C | 2 | 14.1 | 28.2 |
| TYPE-D | 2 | 14.1 | 28.2 |
| TYPE-E | 1 | 16.3 | 16.3 |
| TYPE-F | 1 | 16.3 | 16.3 |
| | | TOTAL | 1 863.8 |

## PC-BOARD DETAILS S=1:10

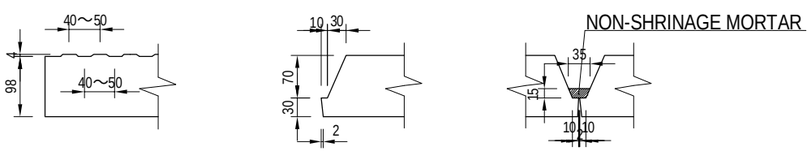


## PC-BOARD ARRANGEMENT S=1:500

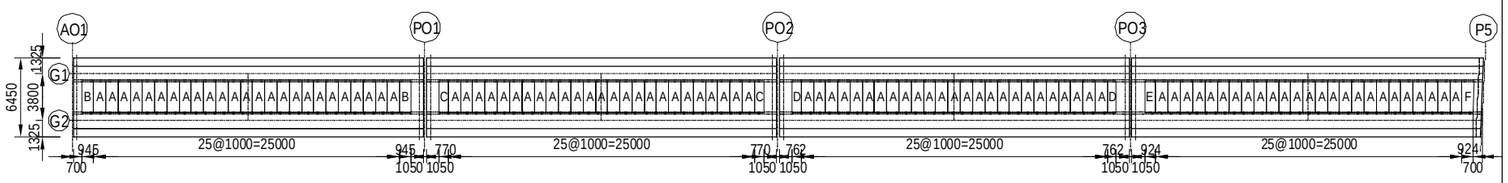


| PROJECT NAME | FINANCED BY | COUNTERPART | JICA STUDY TEAM |
|---|---|---|---|
| DETAILED DESIGN ON BAGO RIVER BRIDGE CONSTRUCTION PROJECT | JAPAN INTERNATIONAL COOPERATION AGENCY | REPUBLIC OF THE UNION OF MYANMAR MINISTRY OF CONSTRUCTION DEPARTMENT OF BRIDGE | NIPPON KOEI CO., LTD. ORIENTAL CONSULTANTS GLOBAL CO., LTD. METROPOLITAN EXPRESSWAY COMPANY LIMITED CHODAI CO.,LTD. NIPPON ENGINEERING CONSULTANTS CO.,LTD. |

| | NAME | SIGNATURE | DATE |
|---|---|---|---|
| PREPARED BY | M. OHYAMA | 大山満弘 | 15 Jun.2017 |
| CHECKED BY | T. HAYAKAWA | 早川知彦 | 20 Jun.2017 |
| APPROVED BY | Y. SANO | 佐野裕一 | 21 Jun.2017 |

DRAWING TITLE: BAR ARRANGEMENT OF PC-BOARD FOR ON-RAMP

PACKAGE: 1

DWG No.: P1-OR-1501

# COORDINATES OF SUBSTRUCTURE (A01-P03)

| NAME | | A01 | P01 | P02 | P03 |
|---|---|---|---|---|---|
| STATION | | 0+411.009 | 0+439.809 | 0+468.609 | 0+497.409 |
| CL | X | 1857584.6389 | 1857606.7042 | 1857628.7694 | 1857650.8347 |
| | Y | 205466.0971 | 205447.5886 | 205429.0801 | 205410.5716 |
| AZIMUTH | | 230d 00′ 35.4″ | 230d 00′ 35.4″ | 230d 00′ 35.4″ | 230d 00′ 35.4″ |
| SKEW ANGLE (θ) | | 90d 00′ 00″ | 90d 00′ 00″ | 90d 00′ 00″ | 90d 00′ 00″ |
| OFFSET (m) | | +0.250 | +0.250 | +0.250 | +0.250 |

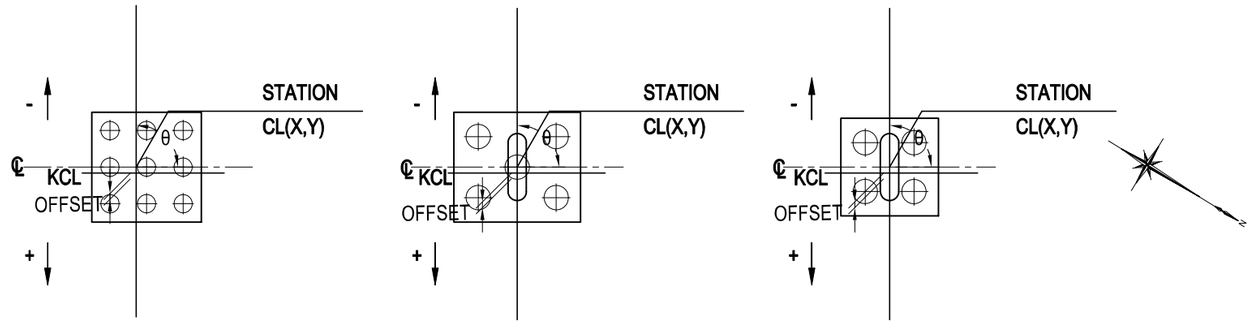


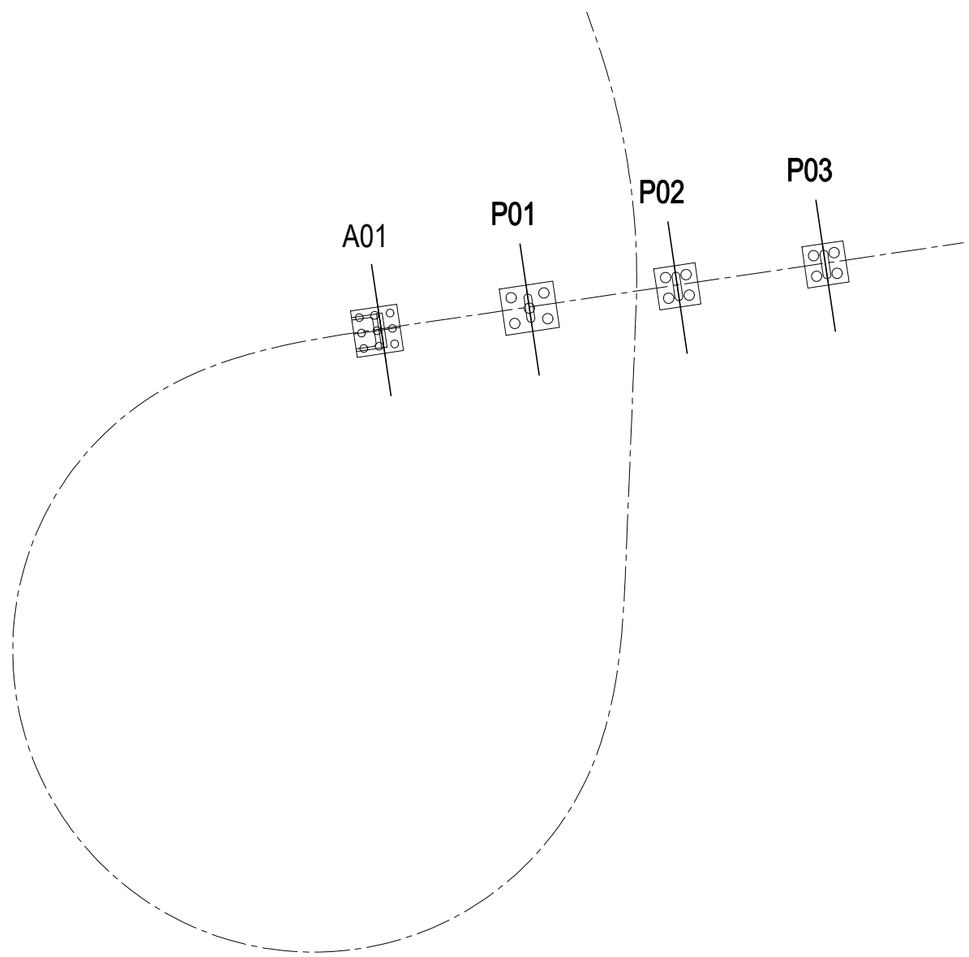


| PROJECT NAME | FINANCED BY | COUNTERPART | JICA STUDY TEAM | | NAME | SIGNATURE | DATE | DRAWING TITLE | PACKAGE |
|---|---|---|---|---|---|---|---|---|---|
| DETAILED DESIGN ON BAGO RIVER BRIDGE CONSTRUCTION PROJECT | JAPAN INTERNATIONAL COOPERATION AGENCY | REPUBLIC OF THE UNION OF MYANMAR MINISTRY OF CONSTRUCTION DEPARTMENT OF BRIDGE | NIPPON KOEI CO., LTD. ORIENTAL CONSULTANTS GLOBAL CO., LTD. METROPOLITAN EXPRESSWAY COMPANY LIMITED CHODAI CO.,LTD. NIPPON ENGINEERING CONSULTANTS CO.,LTD. | PREPARED BY | M. OHYAMA | 大山満弘 | 15 Jun.2017 | COORDINATES OF SUBSTRUCTURE (A01-P03) | 1 |
| | | | | CHECKED BY | T. HAYAKAWA | 早川知彦 | 20 Jun.2017 | | DWG No. |
| | | | | APPROVED BY | Y. SANO | 佐野雅一 | 21 Jun.2017 | | P1-OR-2000 |

# GENERAL VIEW OF AO1 ABUTMENT(1) S =1:300

## SECTION 1 - 1

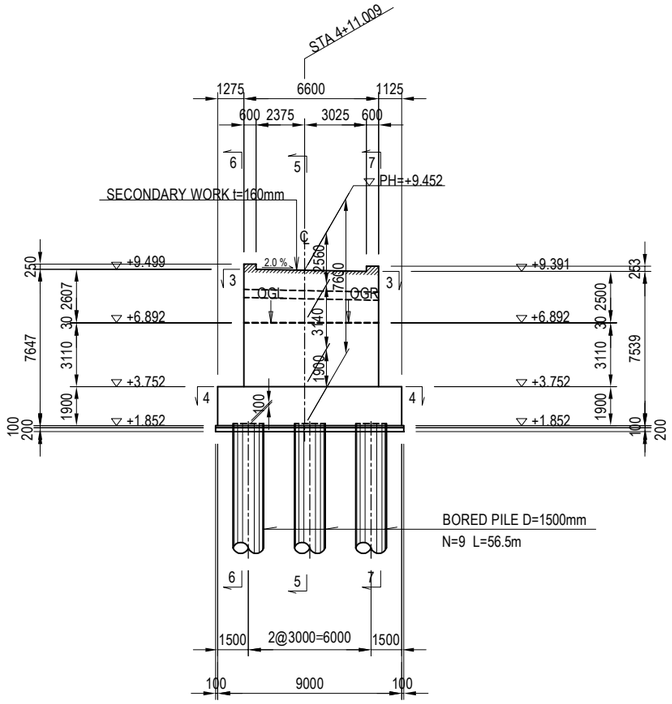


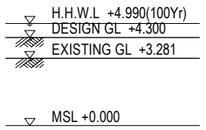


## SECTION 2 - 2

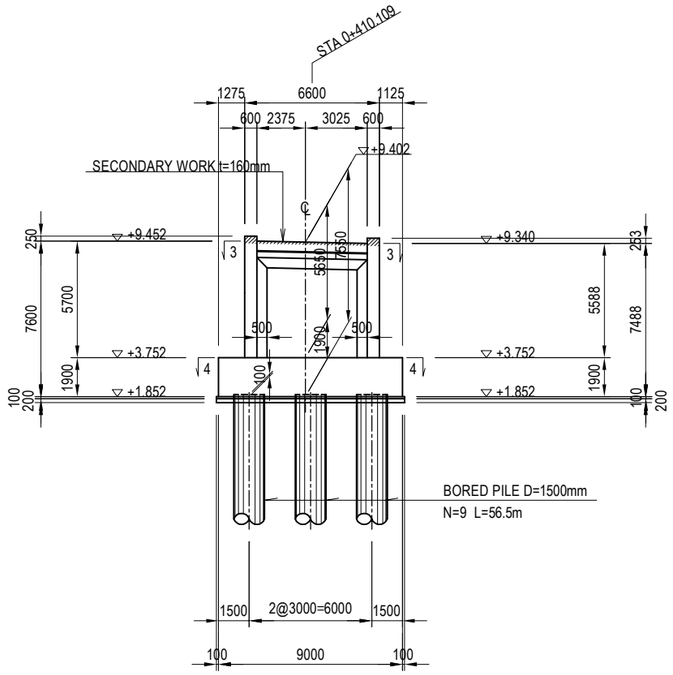


## SECTION 3 - 3

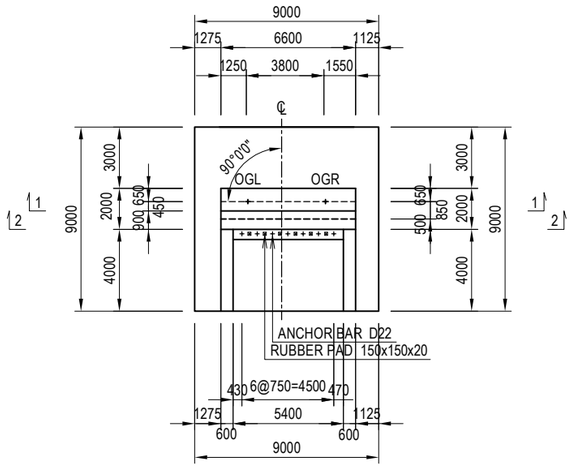


## SECTION 4 - 4

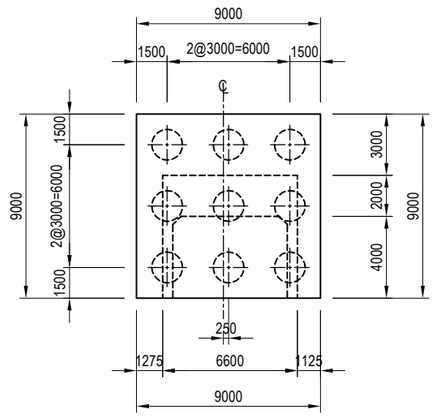


| PROJECT NAME | FINANCED BY | COUNTERPART | JICA STUDY TEAM |
|---|---|---|---|
| DETAILED DESIGN ON BAGO RIVER BRIDGE CONSTRUCTION PROJECT | JAPAN INTERNATIONAL COOPERATION AGENCY | REPUBLIC OF THE UNION OF MYANMAR MINISTRY OF CONSTRUCTION DEPARTMENT OF BRIDGE | NIPPON KOEI CO., LTD. ORIENTAL CONSULTANTS GLOBAL CO., LTD. METROPOLITAN EXPRESSWAY COMPANY LIMITED CHODAI CO.,LTD. NIPPON ENGINEERING CONSULTANTS CO.,LTD. |

| | NAME | SIGNATURE | DATE |
|---|---|---|---|
| PREPARED BY | M. OHYAMA | 大山満弘 | 15 Jun.2017 |
| CHECKED BY | T. HAYAKAWA | 早川知邦 | 20 Jun.2017 |
| APPROVED BY | Y. SANO | 佐野雅一 | 21 Jun.2017 |

| DRAWING TITLE | PACKAGE |
|---|---|
| GENERAL VIEW OF AO1 ABUTMENT(1) | 1 |
| | DWG No. |
| | P1-OR-2001 |

# GENERAL VIEW OF AO1 ABUTMENT(2) S =1:300

## SECTION 5 - 5

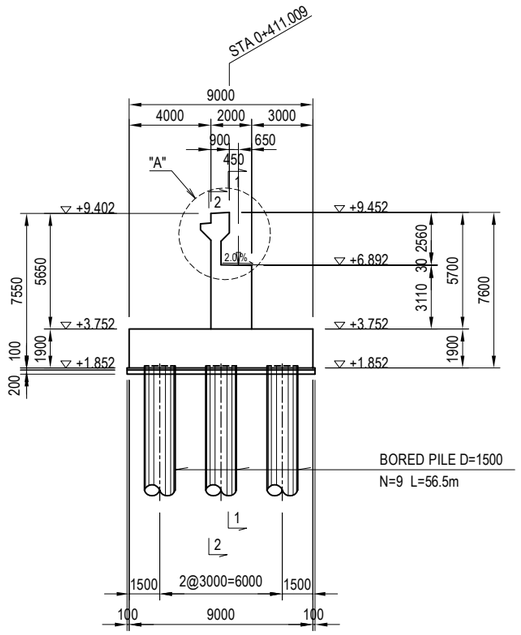


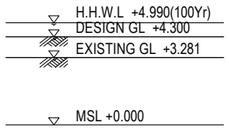


## SECTION 6 - 6

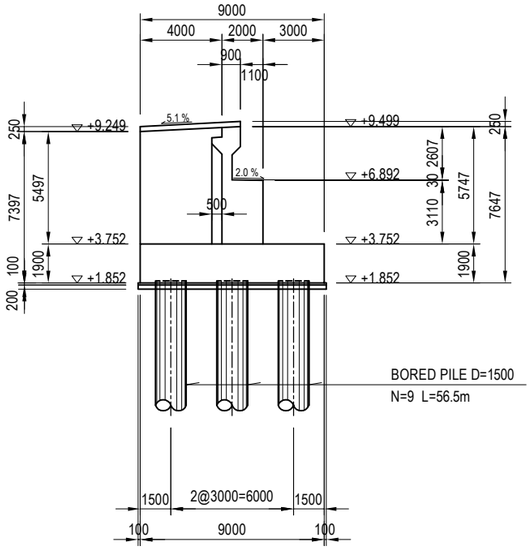


## SECTION 7 - 7

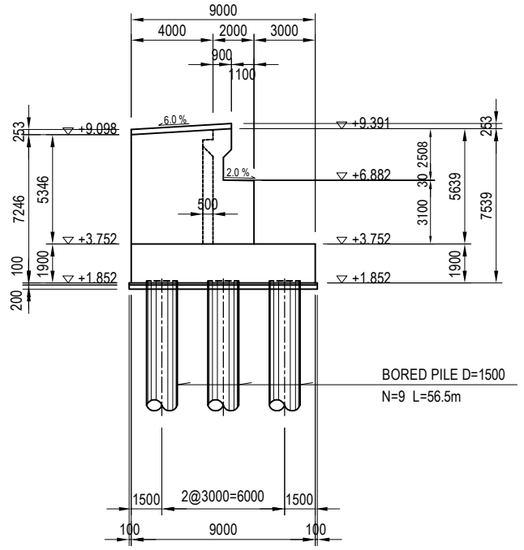


## DETAIL "A" S =1:50

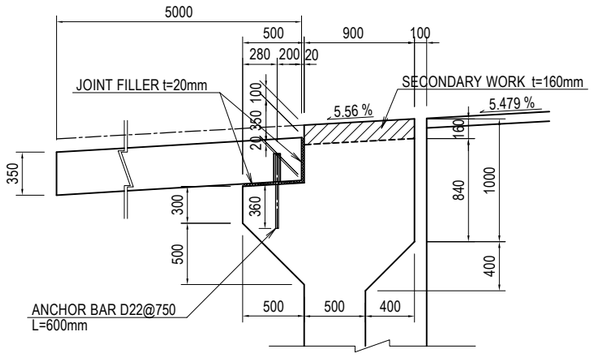


## DETAIL OF BEARING S =1:60

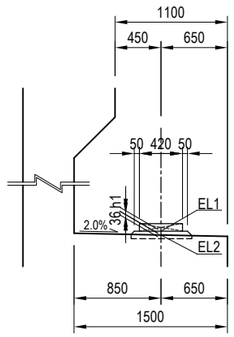


| Unit : m | OGL | OGR |
|---|---|---|
| EL1 | 6.909 | 6.909 |
| EL2 | 6.875 | 6.875 |
| h1 | 0.034 | 0.034 |
| θ | 90d0'0" | 90d0'0" |

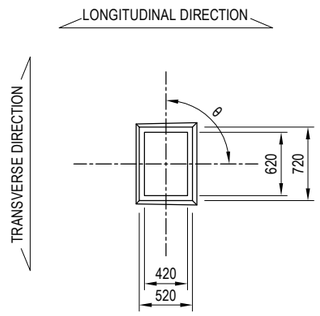


## DETAIL OF ANCHOR BAR S =1:60

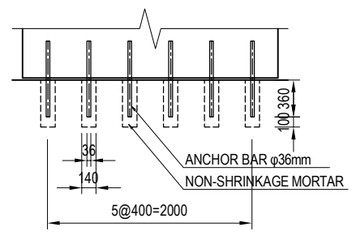


## ARRANGEMENT OF BRIDGE SEAT

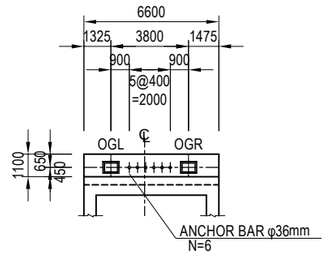


NOTES :
1. Weep holes shall be installed in abutment wall by 3 meter interval for discharge of water from backfilled soil.
2. The Contractor shall adjust gradients of top surface of a parapet wall to retain continuity in road profile.
3. Regardless of existences of indications on the Drawings, baseplates of bridge bearings shall be embedded into leveling mortar by 10 mm and the leveling motar shall be embedded into concrete pedestal or top surface of substructures by 30 mm.

| PROJECT NAME | FINANCED BY | COUNTERPART | JICA STUDY TEAM |
|---|---|---|---|
| DETAILED DESIGN ON BAGO RIVER BRIDGE CONSTRUCTION PROJECT | JAPAN INTERNATIONAL COOPERATION AGENCY | REPUBLIC OF THE UNION OF MYANMAR MINISTRY OF CONSTRUCTION DEPARTMENT OF BRIDGE | NIPPON KOEI CO., LTD. ORIENTAL CONSULTANTS GLOBAL CO., LTD. METROPOLITAN EXPRESSWAY COMPANY LIMITED CHODAI CO.,LTD. NIPPON ENGINEERING CONSULTANTS CO.,LTD. |

| | NAME | SIGNATURE | DATE |
|---|---|---|---|
| PREPARED BY | M. OHYAMA | 大山満弘 | 15 Jun.2017 |
| CHECKED BY | T. HAYAKAWA | 早川知邦 | 20 Jun.2017 |
| APPROVED BY | Y. SANO | 佐野雅一 | 21 Jun.2017 |

| DRAWING TITLE | PACKAGE |
|---|---|
| GENERAL VIEW OF AO1 ABUTMENT(2) | 1 |
| | DWG No. |
| | P1-OR-2002 |

# GENERAL VIEW OF PO1 PIER

S =1:300

## FRONT VIEW
1 - 1  2 - 2

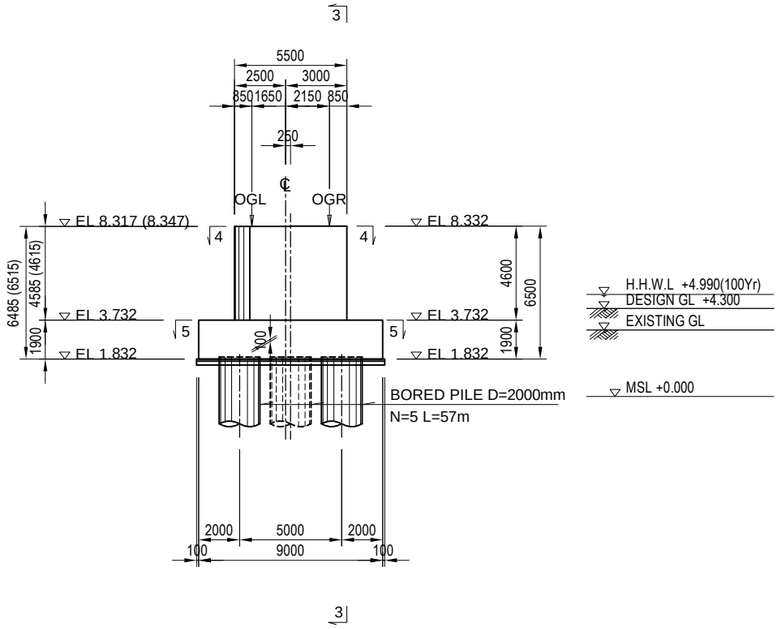


## SIDE VIEW
3 - 3

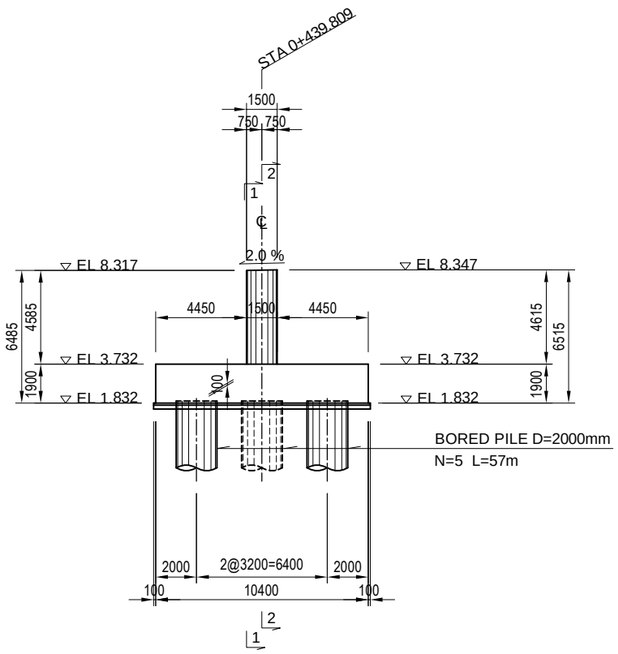


## DETAIL OF BEARING
S =1:60

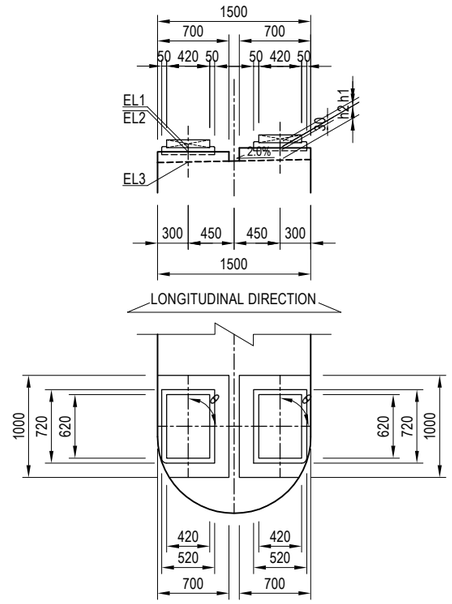


| Unit : m | OGL1 | OGR1 | OGL2 | OGR2 |
|---|---|---|---|---|
| EL1 | 8.461 | 8.461 | 8.510 | 8.510 |
| EL2 | 8.423 | 8.423 | 8.461 | 8.461 |
| EL3 | 8.323 | 8.323 | 8.341 | 8.341 |
| h1 | 0.038 | 0.038 | 0.049 | 0.049 |
| h2 | 0.100 | 0.100 | 0.120 | 0.120 |
| θ | 90d0'0" | 90d0'0" | 90d0'0" | 90d0'0" |

## DETAIL OF ANCHOR BAR
S =1:60

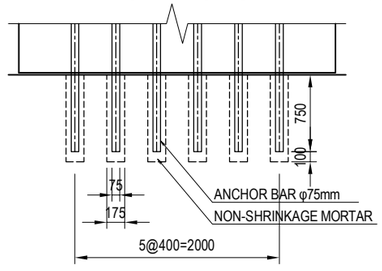


## PLAN VIEW
4 - 4

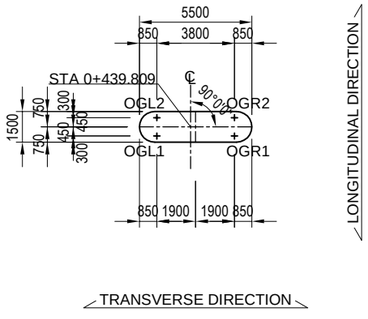


## PILE ARRANGEMENT
5 - 5

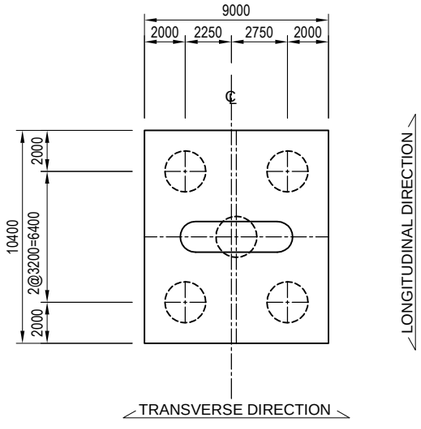


## ARRANGEMENT OF BRIDGE SEAT

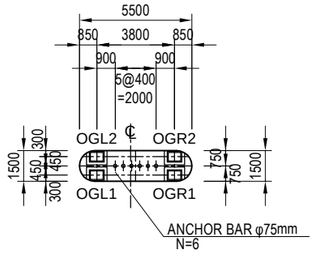


Notes : Regardless of existences of indications on the Drawings,
baseplates of bridge bearings shall be embedded into leveling mortar by 10 mm and the
leveling motar shall be embedded into concrete pedestal or top surface of substructures by 30 mm.

| PROJECT NAME | FINANCED BY | COUNTERPART | JICA STUDY TEAM |
|---|---|---|---|
| DETAILED DESIGN ON BAGO RIVER BRIDGE CONSTRUCTION PROJECT | JAPAN INTERNATIONAL COOPERATION AGENCY | REPUBLIC OF THE UNION OF MYANMAR MINISTRY OF CONSTRUCTION DEPARTMENT OF BRIDGE | NIPPON KOEI CO., LTD. ORIENTAL CONSULTANTS GLOBAL CO., LTD. METROPOLITAN EXPRESSWAY COMPANY LIMITED CHODAI CO.,LTD. NIPPON ENGINEERING CONSULTANTS CO.,LTD. |

| | NAME | SIGNATURE | DATE |
|---|---|---|---|
| PREPARED BY | M. OHYAMA | 大山満弘 | 15 Jun.2017 |
| CHECKED BY | T. HAYAKAWA | 早川和邦 | 20 Jun.2017 |
| APPROVED BY | Y. SANO | 佐野雅一 | 21 Jun.2017 |

| DRAWING TITLE | PACKAGE |
|---|---|
| GENERAL VIEW OF PO1 PIER | 1 |
| | DWG No. |
| | P1-OR-2011 |

# GENERAL VIEW OF PO2 PIER

S =1:300

## FRONT VIEW
1 - 1　　2 - 2

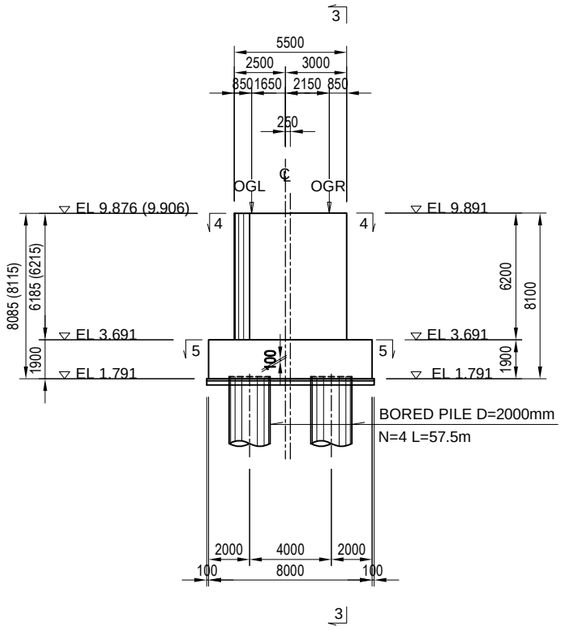


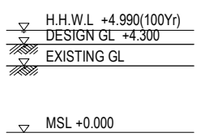


## SIDE VIEW
3 - 3

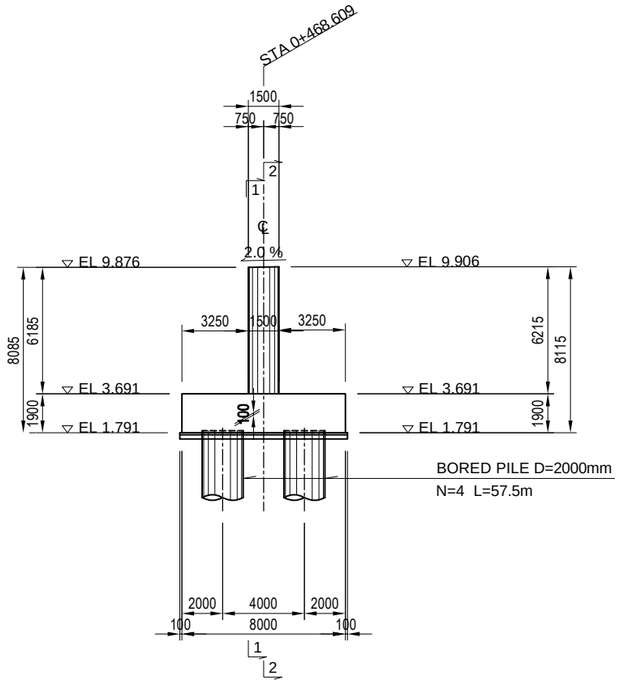


## DETAIL OF BEARING

S =1:60

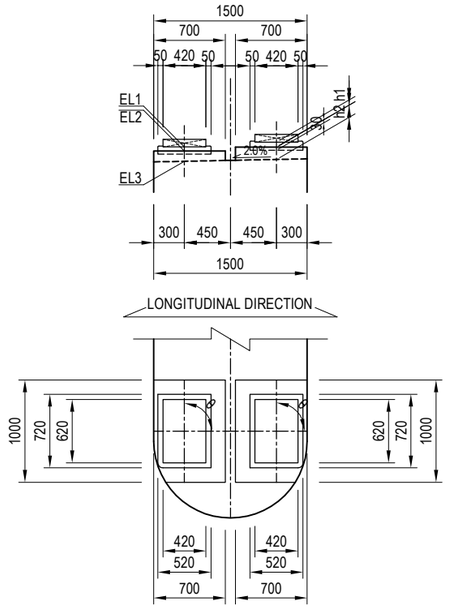


| Unit : m | OGL1 | OGR1 | OGL2 | OGL2 |
|---|---|---|---|---|
| EL1 | 10.019 | 10.019 | 10.064 | 10.064 |
| EL2 | 9.982 | 9.982 | 10.020 | 10.020 |
| EL3 | 9.882 | 9.882 | 9.900 | 9.900 |
| h1 | 0.037 | 0.037 | 0.044 | 0.044 |
| h2 | 0.100 | 0.100 | 0.120 | 0.120 |
| θ | 90d0'0" | 90d0'0" | 90d0'0" | 90d0'0" |

## DETAIL OF ANCHOR BAR

S =1:60

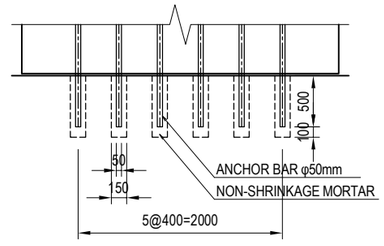


## PLAN VIEW
4 - 4

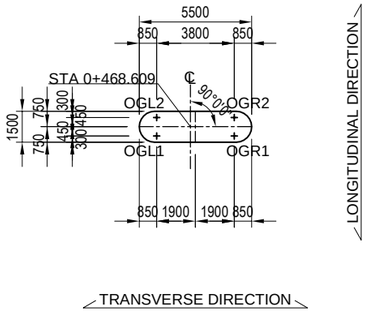


## PILE ARRANGEMENT
5 - 5

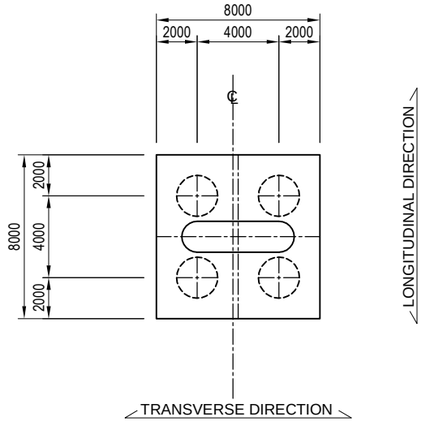


## ARRANGEMENT OF BRIDGE SEAT

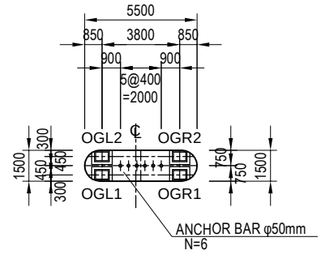


Notes : Regardless of existences of indications on the Drawings,
baseplates of bridge bearings shall be embedded into leveling mortar by 10 mm and the
leveling motar shall be embedded into concrete pedestal or top surface of substructures by 30 mm.

| PROJECT NAME | FINANCED BY | COUNTERPART | JICA STUDY TEAM |
|---|---|---|---|
| DETAILED DESIGN ON BAGO RIVER BRIDGE CONSTRUCTION PROJECT | JAPAN INTERNATIONAL COOPERATION AGENCY | REPUBLIC OF THE UNION OF MYANMAR MINISTRY OF CONSTRUCTION DEPARTMENT OF BRIDGE | NIPPON KOEI CO., LTD. ORIENTAL CONSULTANTS GLOBAL CO., LTD. METROPOLITAN EXPRESSWAY COMPANY LIMITED CHODAI CO.,LTD. NIPPON ENGINEERING CONSULTANTS CO.,LTD. |

| | NAME | SIGNATURE | DATE |
|---|---|---|---|
| PREPARED BY | M. OHYAMA | 大山満弘 | 15 Jun.2017 |
| CHECKED BY | T. HAYAKAWA | 早川和邦 | 20 Jun.2017 |
| APPROVED BY | Y. SANO | 佐野雅一 | 21 Jun.2017 |

| DRAWING TITLE | PACKAGE |
|---|---|
| GENERAL VIEW OF PO2 PIER | 1 |
| | DWG No. |
| | P1-OR-2021 |

# GENERAL VIEW OF PO3 PIER

S =1:300

## FRONT VIEW
1 - 1　　2 - 2

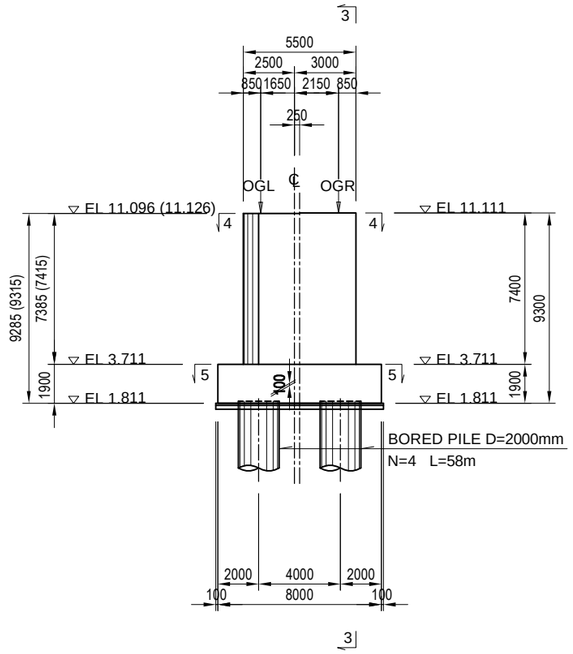


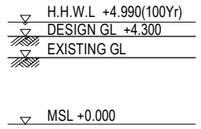


## SIDE VIEW
3 - 3

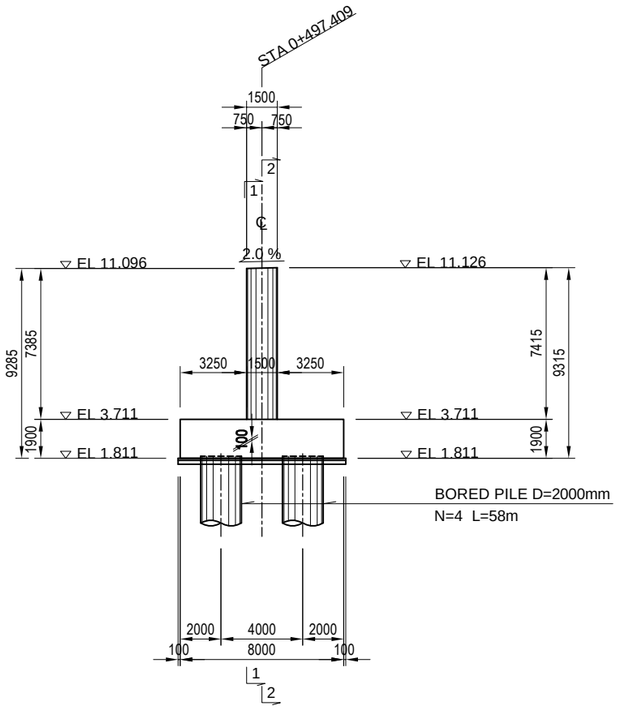


## DETAIL OF BEARING

S =1:60

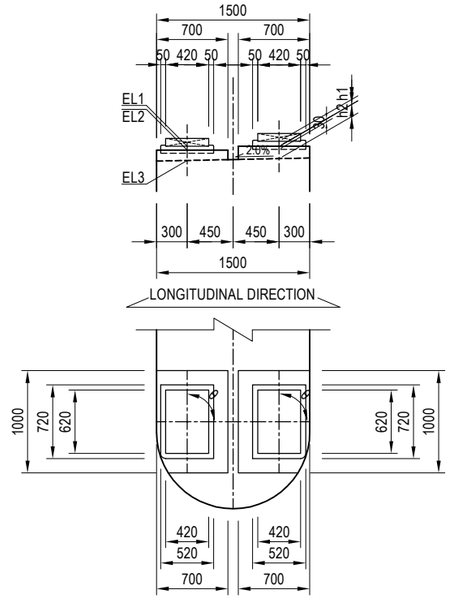


| Unit : m | OGL1 | OGR1 | OGL2 | OGL2 |
|---|---|---|---|---|
| EL1 | 11.241 | 11.241 | 11.278 | 11.278 |
| EL2 | 11.202 | 11.202 | 11.240 | 11.240 |
| EL3 | 11.102 | 11.102 | 11.120 | 11.120 |
| h1 | 0.039 | 0.039 | 0.038 | 0.038 |
| h2 | 0.100 | 0.100 | 0.120 | 0.120 |
| θ | 90d0'0" | 90d0'0" | 90d0'0" | 90d0'0" |

## DETAIL OF ANCHOR BAR

S =1:60

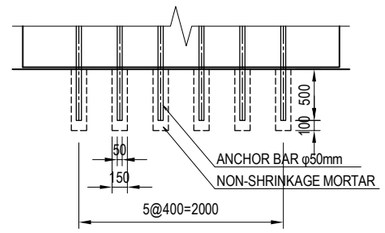


## PLAN VIEW
4 - 4

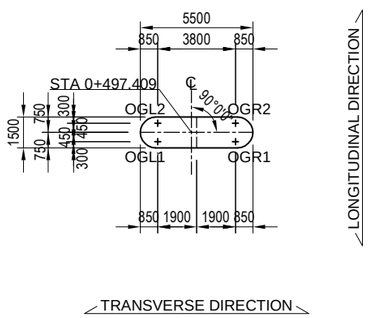


## PILE ARRANGEMENT
5 - 5

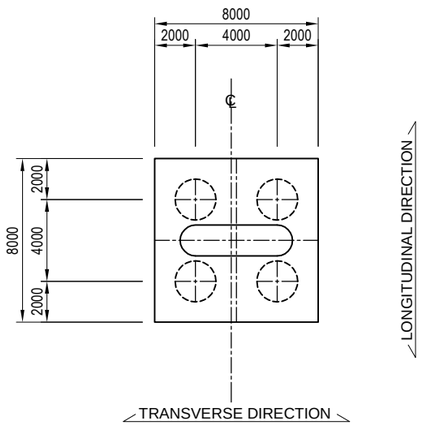


## ARRANGEMENT OF BRIDGE SEAT

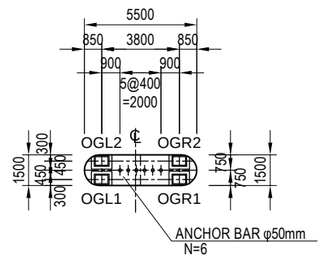


Notes : Regardless of existences of indications on the Drawings,
baseplates of bridge bearings shall be embedded into leveling mortar by 10 mm and the
leveling motar shall be embedded into concrete pedestal or top surface of substructures by 30 mm.

| PROJECT NAME | FINANCED BY | COUNTERPART | JICA STUDY TEAM |
|---|---|---|---|
| DETAILED DESIGN ON BAGO RIVER BRIDGE CONSTRUCTION PROJECT | JAPAN INTERNATIONAL COOPERATION AGENCY | REPUBLIC OF THE UNION OF MYANMAR MINISTRY OF CONSTRUCTION DEPARTMENT OF BRIDGE | NIPPON KOEI CO., LTD. ORIENTAL CONSULTANTS GLOBAL CO., LTD. METROPOLITAN EXPRESSWAY COMPANY LIMITED CHODAI CO.,LTD. NIPPON ENGINEERING CONSULTANTS CO.,LTD. |

| | NAME | SIGNATURE | DATE |
|---|---|---|---|
| PREPARED BY | M. OHYAMA | 大山 満弘 | 15 Jun.2017 |
| CHECKED BY | T. HAYAKAWA | 早川 知夫 | 20 Jun.2017 |
| APPROVED BY | Y. SANO | 佐野 雅一 | 21 Jun.2017 |

| DRAWING TITLE | PACKAGE |
|---|---|
| GENERAL VIEW OF PO3 PIER | 1 |
| | DWG No. |
| | P1-OR-2031 |

# BAR ARRANGEMENT OF AO1 ABUTMENT(1) S=1:100

## 1 - 1

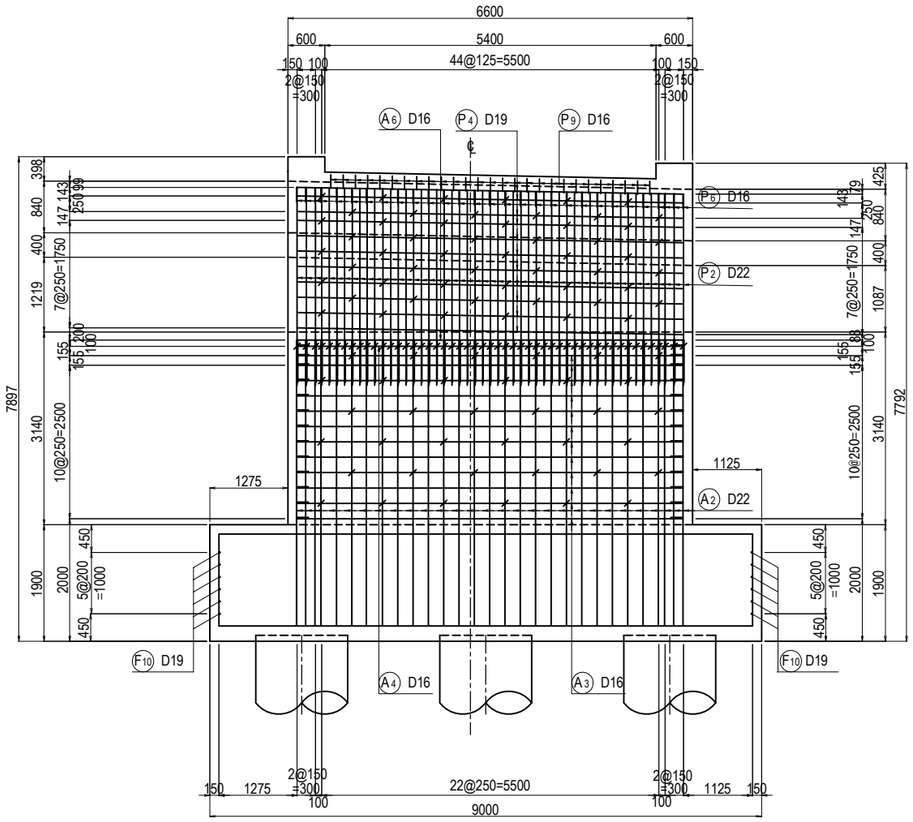


## 3 - 3

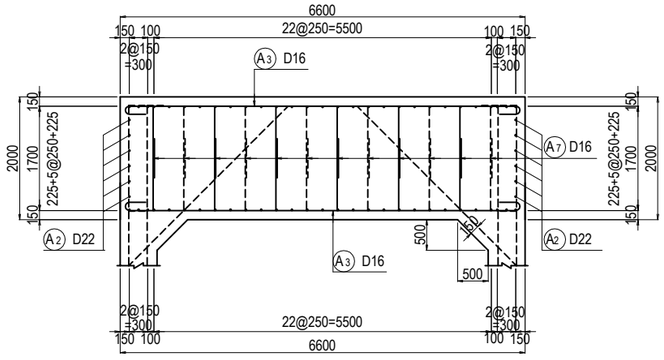


## KEY PLAN

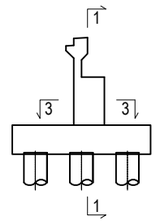


NOTES : Steel bars for fixing bridge expansion joints are reference only.
The contractor shall propose such steel bar considering
specifications of expansion joints actually used.

| PROJECT NAME | FINANCED BY | COUNTERPART | JICA STUDY TEAM |
|---|---|---|---|
| DETAILED DESIGN ON BAGO RIVER BRIDGE CONSTRUCTION PROJECT | JAPAN INTERNATIONAL COOPERATION AGENCY | REPUBLIC OF THE UNION OF MYANMAR MINISTRY OF CONSTRUCTION DEPARTMENT OF BRIDGE | NIPPON KOEI CO., LTD. ORIENTAL CONSULTANTS GLOBAL CO., LTD. METROPOLITAN EXPRESSWAY COMPANY LIMITED CHODAI CO.,LTD. NIPPON ENGINEERING CONSULTANTS CO.,LTD. |

| | NAME | SIGNATURE | DATE |
|---|---|---|---|
| PREPARED BY | M. OHYAMA | 大山渦弘 | 15 Jun.2017 |
| CHECKED BY | T. HAYAKAWA | 早川知邦 | 20 Jun.2017 |
| APPROVED BY | Y. SANO | 佐野雅一 | 21 Jun.2017 |

| DRAWING TITLE | PACKAGE |
|---|---|
| BAR ARRANGEMENT OF AO1 ABUTMENT(1) | 1 |
| | DWG No. |
| | P1-OR-2101 |

# BAR ARRANGEMENT OF AO1 ABUTMENT(2) S=1:100

## 2 - 2

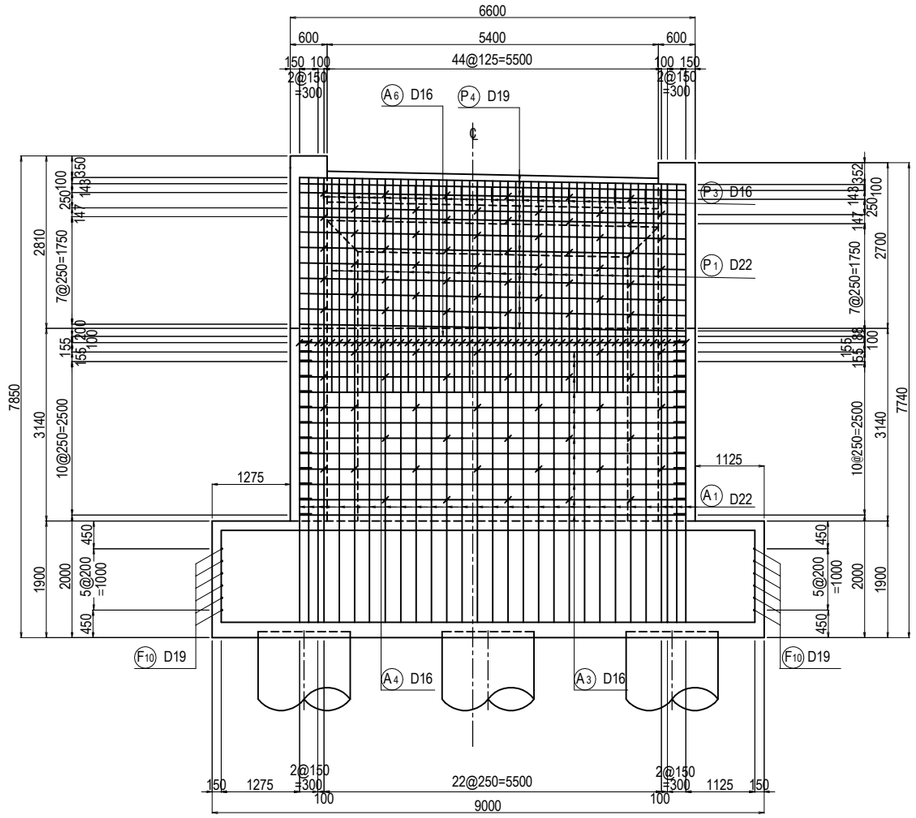


## BEARING BASE S =1:60

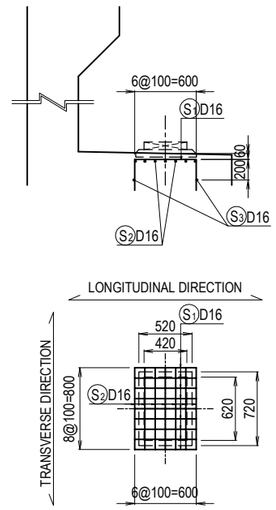


## 4 - 4

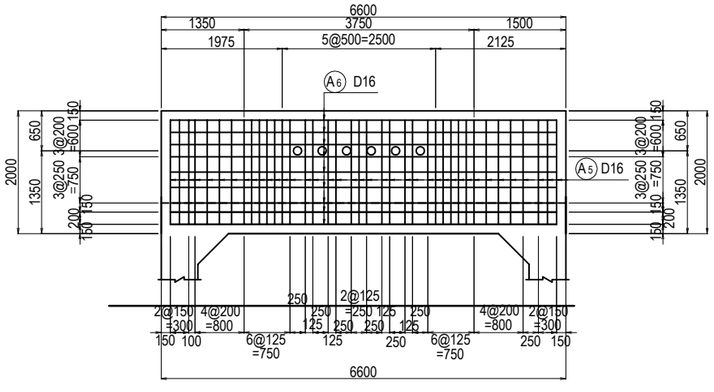


## 5 - 5

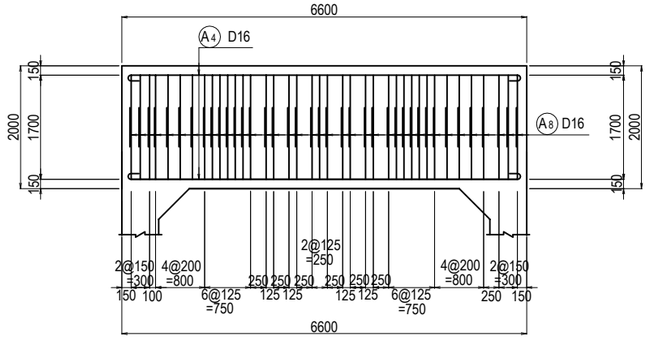


## KEY PLAN

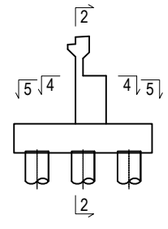


| PROJECT NAME | FINANCED BY | COUNTERPART | JICA STUDY TEAM |
|---|---|---|---|
| DETAILED DESIGN ON BAGO RIVER BRIDGE CONSTRUCTION PROJECT | JAPAN INTERNATIONAL COOPERATION AGENCY | REPUBLIC OF THE UNION OF MYANMAR MINISTRY OF CONSTRUCTION DEPARTMENT OF BRIDGE | NIPPON KOEI CO., LTD. ORIENTAL CONSULTANTS GLOBAL CO., LTD. METROPOLITAN EXPRESSWAY COMPANY LIMITED CHODAI CO.,LTD. NIPPON ENGINEERING CONSULTANTS CO.,LTD. |

| | NAME | SIGNATURE | DATE |
|---|---|---|---|
| PREPARED BY | M. OHYAMA | 大山満弘 | 15 Jun.2017 |
| CHECKED BY | T. HAYAKAWA | 早川和邦 | 20 Jun.2017 |
| APPROVED BY | Y. SANO | 佐野裕一 | 21 Jun.2017 |

| DRAWING TITLE | PACKAGE |
|---|---|
| BAR ARRANGEMENT OF AO1 ABUTMENT(2) | 1 |
| | DWG No. |
| | P1-OR-2102 |

# BAR ARRANGEMENT OF AO1 ABUTMENT(3) S=1:100

## 8 - 8

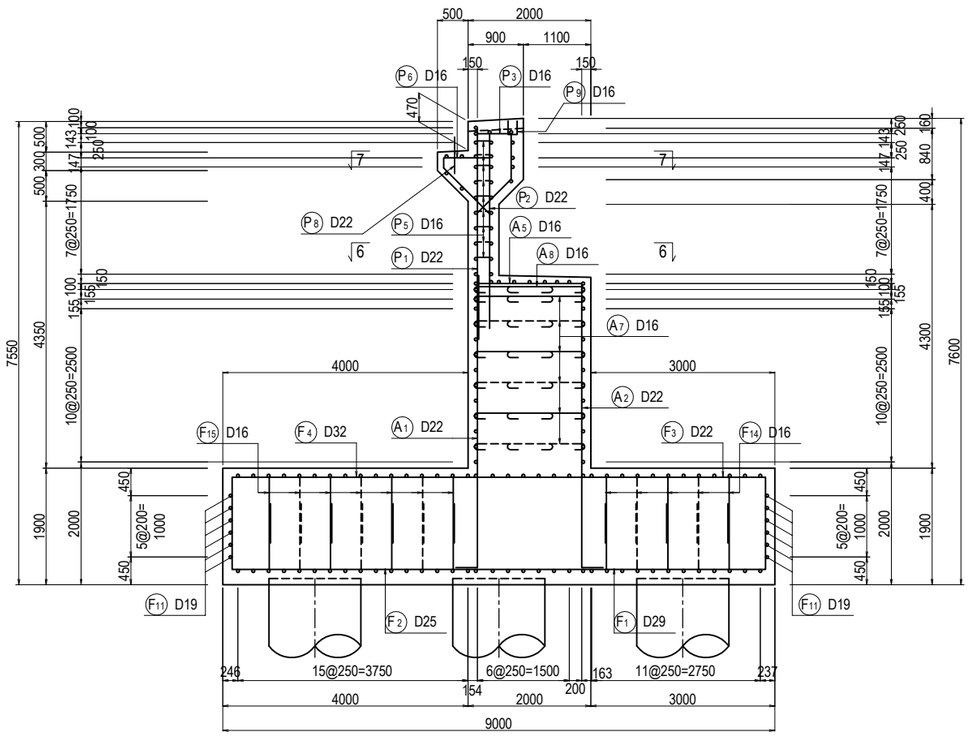


## DETAIL S =1:40

### PARAPET

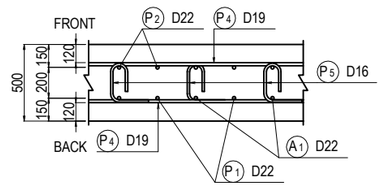


### WALL

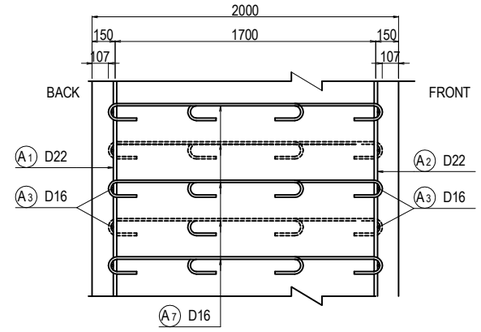


### PILE CAP

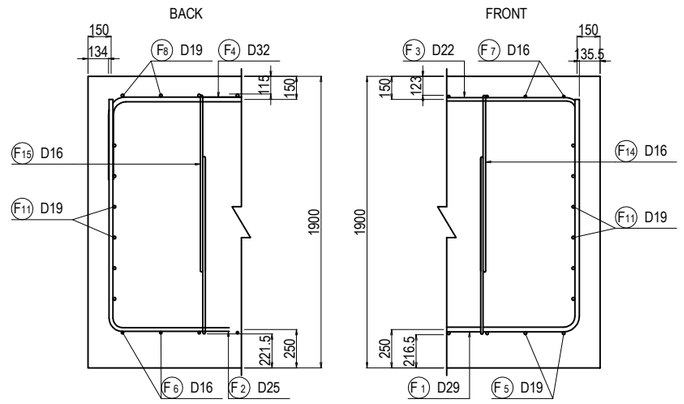


## 6 - 6

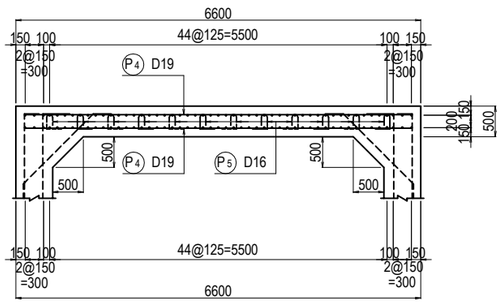


## 7 - 7

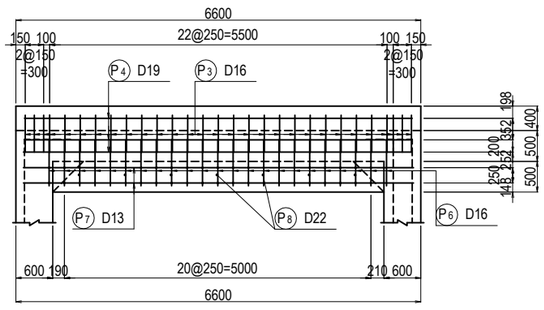


## KEY PLAN

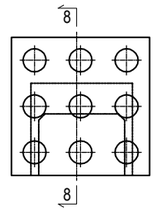


| PROJECT NAME | FINANCED BY | COUNTERPART | JICA STUDY TEAM |
|---|---|---|---|
| DETAILED DESIGN ON BAGO RIVER BRIDGE CONSTRUCTION PROJECT | JAPAN INTERNATIONAL COOPERATION AGENCY | REPUBLIC OF THE UNION OF MYANMAR MINISTRY OF CONSTRUCTION DEPARTMENT OF BRIDGE | NIPPON KOEI CO., LTD. ORIENTAL CONSULTANTS GLOBAL CO., LTD. METROPOLITAN EXPRESSWAY COMPANY LIMITED CHODAI CO.,LTD. NIPPON ENGINEERING CONSULTANTS CO.,LTD. |

| | NAME | SIGNATURE | DATE |
|---|---|---|---|
| PREPARED BY | M. OHYAMA | 大山満弘 | 15 Jun.2017 |
| CHECKED BY | T. HAYAKAWA | 早川知邦 | 20 Jun.2017 |
| APPROVED BY | Y. SANO | 佐野雅一 | 21 Jun.2017 |

DRAWING TITLE: BAR ARRANGEMENT OF AO1 ABUTMENT(3)

PACKAGE: 1

DWG No.: P1-OR-2103

# BAR ARRANGEMENT OF AO1 ABUTMENT(4) S=1:100

1 - 1 2 - 2

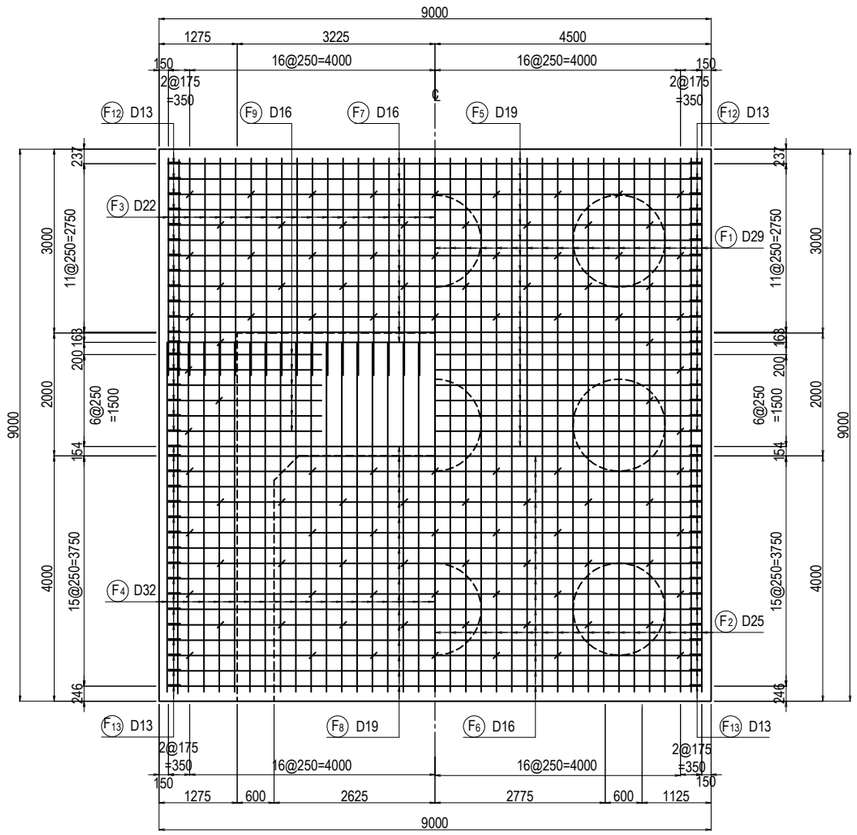


KEY PLAN

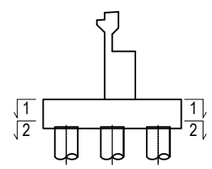


| PROJECT NAME | FINANCED BY | COUNTERPART | JICA STUDY TEAM | | NAME | SIGNATURE | DATE | DRAWING TITLE | PACKAGE |
|---|---|---|---|---|---|---|---|---|---|
| DETAILED DESIGN ON BAGO RIVER BRIDGE CONSTRUCTION PROJECT | JAPAN INTERNATIONAL COOPERATION AGENCY | REPUBLIC OF THE UNION OF MYANMAR MINISTRY OF CONSTRUCTION DEPARTMENT OF BRIDGE | NIPPON KOEI CO., LTD. ORIENTAL CONSULTANTS GLOBAL CO., LTD. METROPOLITAN EXPRESSWAY COMPANY LIMITED CHODAI CO.,LTD. NIPPON ENGINEERING CONSULTANTS CO.,LTD. | PREPARED BY | M. OHYAMA | 大山満弘 | 15 Jun.2017 | BAR ARRANGEMENT OF AO1 ABUTMENT(4) | 1 |
| | | | | CHECKED BY | T. HAYAKAWA | 早川知邦 | 20 Jun.2017 | | DWG No. |
| | | | | APPROVED BY | Y. SANO | 佐野雅一 | 21 Jun.2017 | | P1-OR-2104 |

# BAR ARRANGEMENT OF AO1 ABUTMENT(5) S=1:100

## 1 - 1

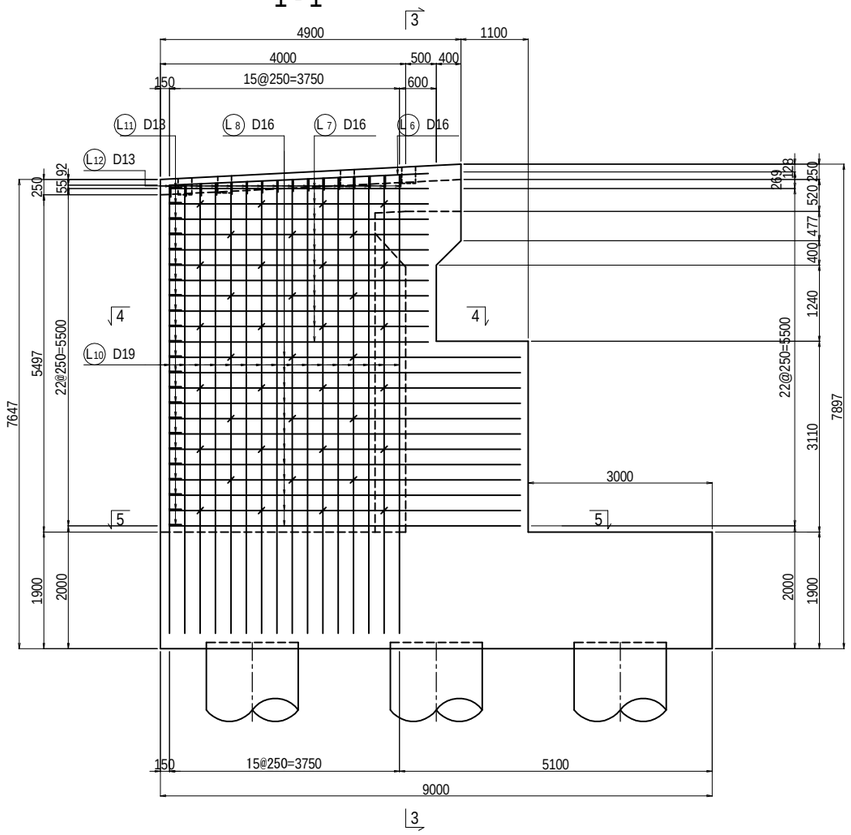


## 3 - 3

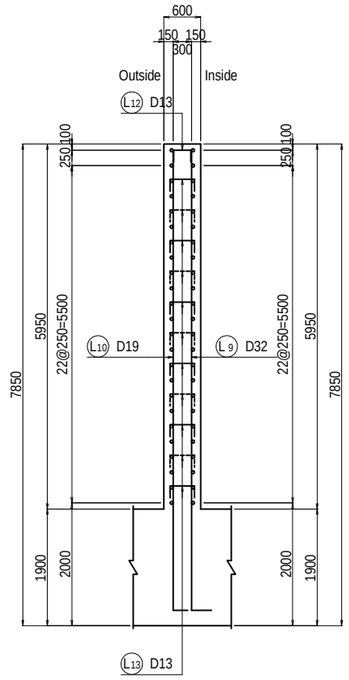


## 2 - 2

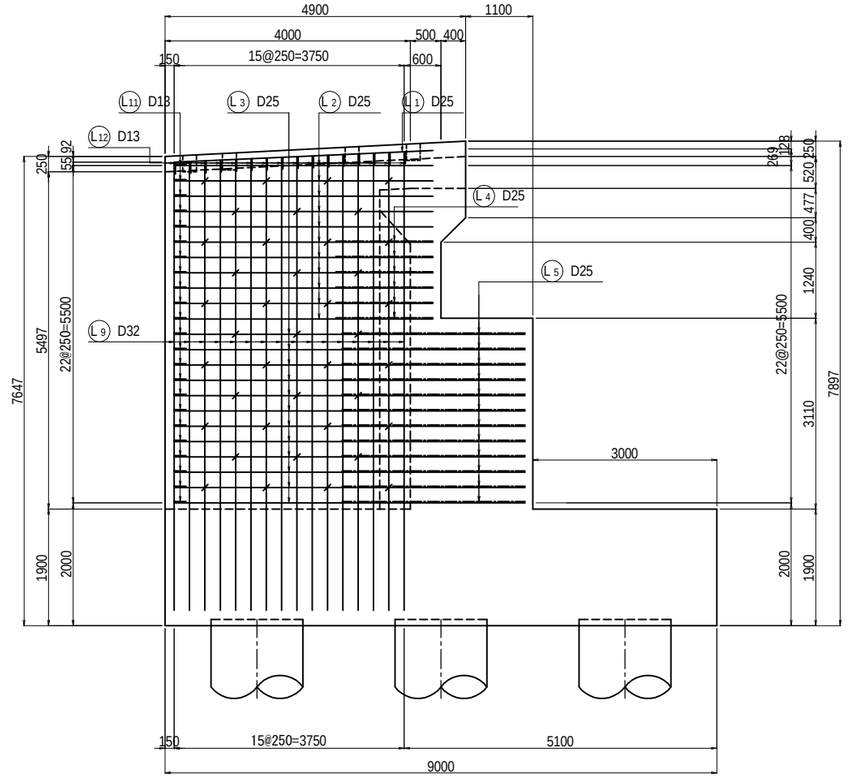


## 4 - 4

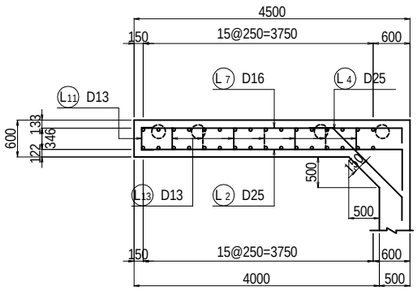


## 5 - 5

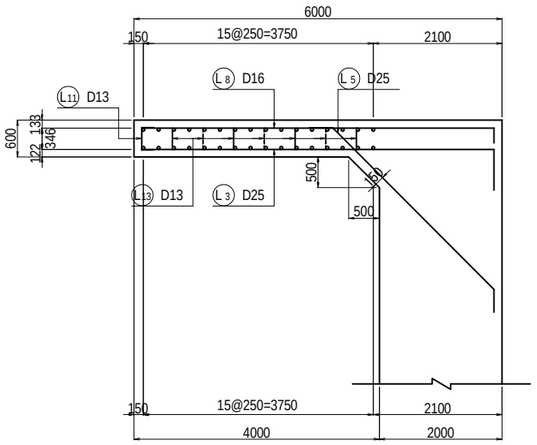


## WING WALL

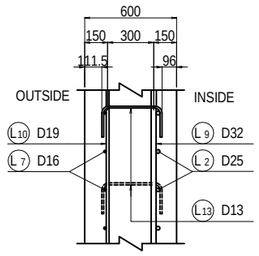


## END POSTS

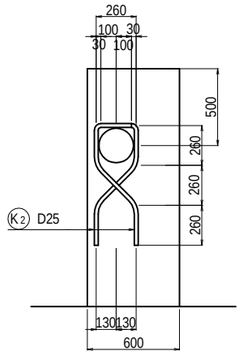


## INTERMEDIATE POSTS

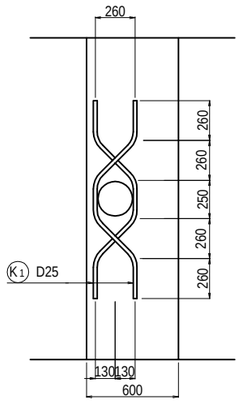


## DETAIL OF REBAR FOR RAILING POST

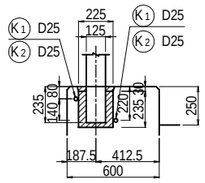


## KEY PLAN

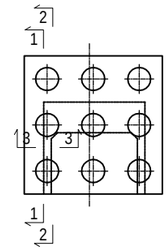


| PROJECT NAME | FINANCED BY | COUNTERPART | JICA STUDY TEAM |
|---|---|---|---|
| DETAILED DESIGN ON BAGO RIVER BRIDGE CONSTRUCTION PROJECT | JAPAN INTERNATIONAL COOPERATION AGENCY | REPUBLIC OF THE UNION OF MYANMAR MINISTRY OF CONSTRUCTION DEPARTMENT OF BRIDGE | NIPPON KOEI CO., LTD. ORIENTAL CONSULTANTS GLOBAL CO., LTD. METROPOLITAN EXPRESSWAY COMPANY LIMITED CHODAI CO.,LTD. NIPPON ENGINEERING CONSULTANTS CO.,LTD. |

| | NAME | SIGNATURE | DATE |
|---|---|---|---|
| PREPARED BY | M. OHYAMA | 大山満弘 | 15 Jun.2017 |
| CHECKED BY | T. HAYAKAWA | 早川知邦 | 20 Jun.2017 |
| APPROVED BY | Y. SANO | 佐野雅一 | 21 Jun.2017 |

| DRAWING TITLE | PACKAGE |
|---|---|
| BAR ARRANGEMENT OF AO1 ABUTMENT(5) | 1 |
| | DWG No. |
| | P1-OR-2105 |

# BAR ARRANGEMENT OF AO1 ABUTMENT(6) S=1:100

## 1 - 1

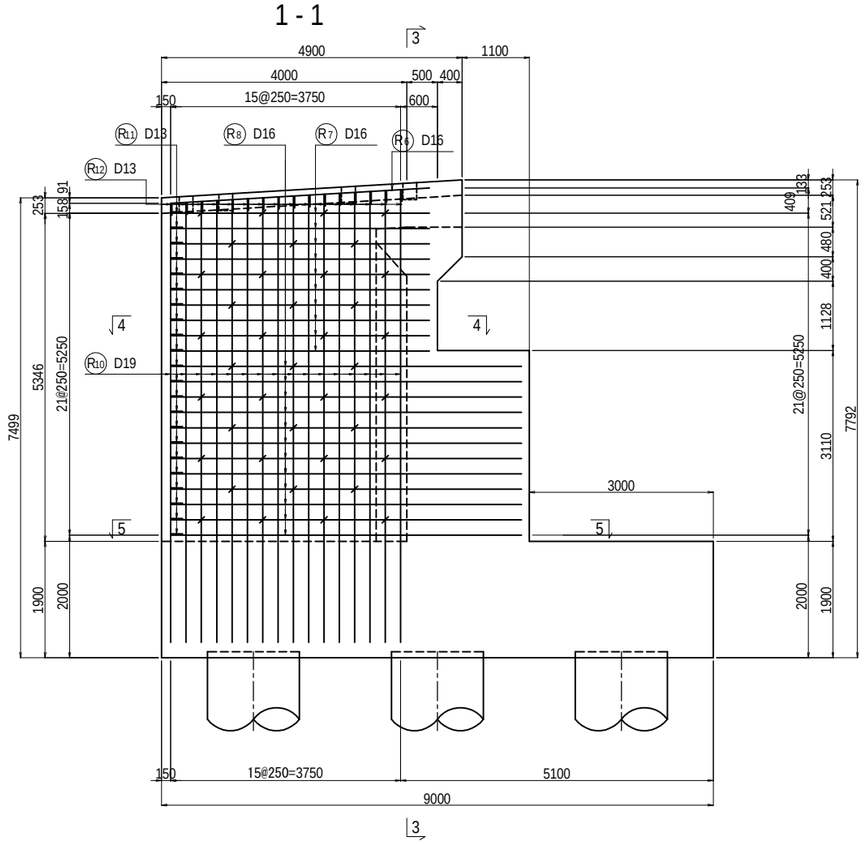


## 3 - 3

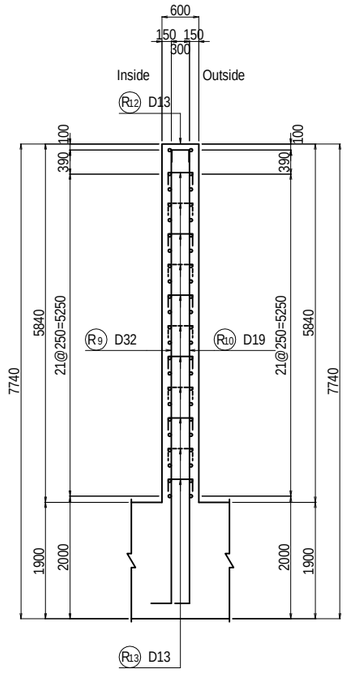


## 2 - 2

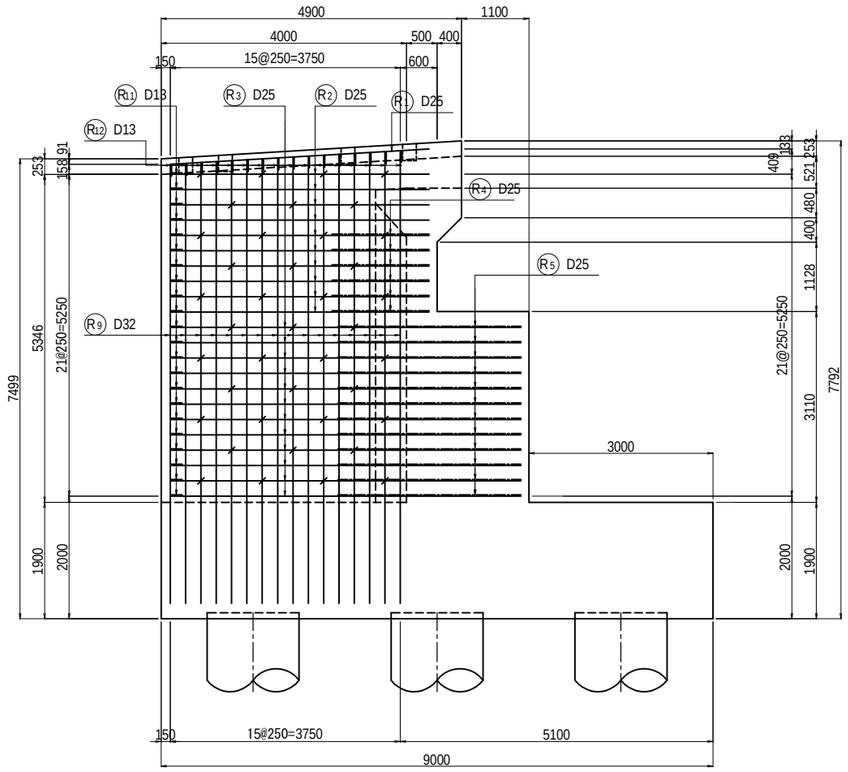


## 4 - 4

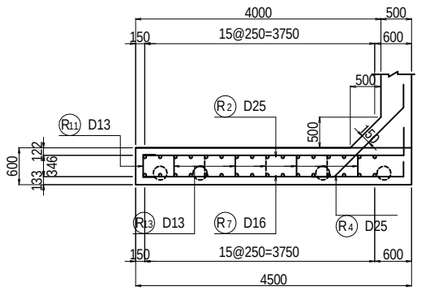


## 5 - 5

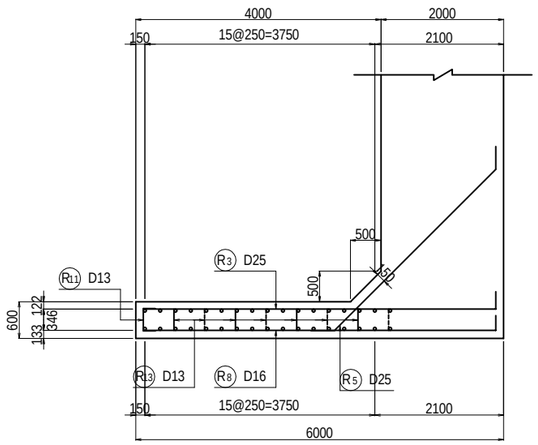


## WING WALL

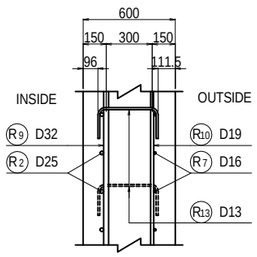


## END POSTS

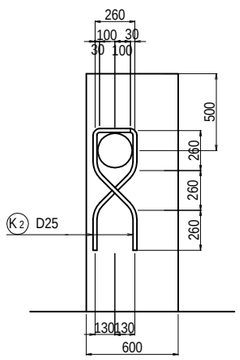


## INTERMEDIATE POSTS

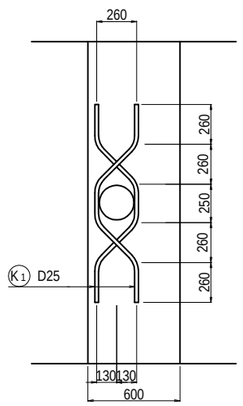


## DETAIL OF REBAR FOR RAILING POST

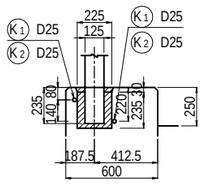


## KEY PLAN

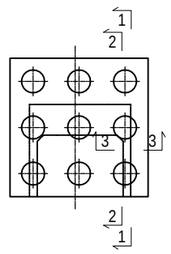


| PROJECT NAME | FINANCED BY | COUNTERPART | JICA STUDY TEAM |
|---|---|---|---|
| DETAILED DESIGN ON BAGO RIVER BRIDGE CONSTRUCTION PROJECT | JAPAN INTERNATIONAL COOPERATION AGENCY | REPUBLIC OF THE UNION OF MYANMAR MINISTRY OF CONSTRUCTION DEPARTMENT OF BRIDGE | NIPPON KOEI CO., LTD. ORIENTAL CONSULTANTS GLOBAL CO., LTD. METROPOLITAN EXPRESSWAY COMPANY LIMITED CHODAI CO.,LTD. NIPPON ENGINEERING CONSULTANTS CO.,LTD. |

| | NAME | SIGNATURE | DATE |
|---|---|---|---|
| PREPARED BY | M. OHYAMA | 大山満弘 | 15 Jun.2017 |
| CHECKED BY | T. HAYAKAWA | 早川知邦 | 20 Jun.2017 |
| APPROVED BY | Y. SANO | 佐野雅一 | 21 Jun.2017 |

DRAWING TITLE: BAR ARRANGEMENT OF AO1 ABUTMENT(6)

PACKAGE: 1

DWG No.: P1-OR-2106

# BAR ARRANGEMENT OF AO1 ABUTMENT (7)

## BAR QUANTITY

| SYMBOL | SHAPE | DIAMETER | NUMBER (NOS) | LENGTH (mm) | a (mm) | b (mm) | c (mm) | d (mm) | e (mm) | f (mm) | R1 (mm) | R2 (mm) | WEIGHT (kg) | REMARKS |
|---|---|---|---|---|---|---|---|---|---|---|---|---|---|---|
| P1 | A | D22 | 22 | 3450 | ***3444*** | | | | | | | | 231 | ***AVERAGE*** |
| P2 | A | D22 | 51 | 3170 | ***3169*** | | | | | | | | 492 | ***AVERAGE*** |
| P3 | G | D16 | 29 | 2190 | 500 | 240 | 740 | 707 | | | | | 99 | |
| P4 | A | D19 | 26 | 6310 | 6301 | | | | | | | | 369 | |
| P5 | I | D16 | 54 | 710 | 190 | 240 | 151 | 128 | | | 48 | | 60 | |
| P6 | H | D16 | 23 | 2220 | 240 | 350 | 400 | 161 | 1061 | | | | 80 | |
| P7 | A | D13 | 4 | 6310 | 6301 | | | | | | | | 25 | |
| P8 | A | D22 | 7 | 600 | 600 | | | | | | | | 13 | |
| | | | | | | | | | | | | | | |
| A1 | B | D22 | 29 | 7530 | ***7194*** | 330 | | | | | | | 664 | ***AVERAGE*** |
| A2 | B | D22 | 41 | 4990 | 4660 | 330 | | | | | | | 622 | |
| A3 | J | D16 | 24 | 6860 | 6300 | 151 | 151 | 128 | 128 | | 48 | 48 | 257 | |
| A4 | J | D16 | 2 | 6860 | 6300 | 151 | 151 | 128 | 128 | | 48 | 48 | 21 | |
| A5 | C | D16 | 39 | 2350 | 1700 | 240 | 410 | | | | | | 143 | |
| A6 | C | D16 | 9 | 7320 | 6300 | 510 | 510 | | | | | | 103 | |
| A7 | J | D16 | 72 | 1720 | 1157 | 151 | 151 | 128 | 128 | | 48 | 48 | 193 | |
| A8 | J | D16 | 78 | 1720 | 1157 | 151 | 151 | 128 | 128 | | 48 | 48 | 209 | |
| | | | | | | | | | | | | | | |
| F1 | B | D29 | 37 | 6200 | 4700 | 1500 | | | | | | | 1156 | |
| F2 | B | D25 | 37 | 6140 | 4640 | 1500 | | | | | | | 904 | |
| F3 | B | D22 | 37 | 3870 | 3540 | 330 | | | | | | | 435 | |
| F4 | B | D32 | 37 | 6180 | 5700 | 480 | | | | | | | 1425 | |
| F5 | A | D19 | 20 | 8700 | 8700 | | | | | | | | 392 | |
| F6 | A | D16 | 16 | 8700 | 8700 | | | | | | | | 217 | |
| F7 | A | D16 | 13 | 8700 | 8700 | | | | | | | | 176 | |
| F8 | A | D19 | 17 | 8700 | 8700 | | | | | | | | 333 | |
| F9 | A | D16 | 12 | 2500 | 2500 | | | | | | | | 47 | |
| F10 | C | D19 | 12 | 9230 | 8654 | 285 | 285 | | | | | | 249 | |
| F11 | A | D19 | 12 | 8660 | 8652 | | | | | | | | 234 | |
| F12 | C | D13 | 38 | 1930 | 1539 | 195 | 195 | | | | | | 73 | |
| F13 | C | D13 | 34 | 1940 | 1542 | 195 | 195 | | | | | | 66 | |
| F14 | J | D16 | 102 | 1610 | 1043 | 151 | 151 | 128 | 128 | | 48 | 48 | 256 | |
| F15 | J | D16 | 104 | 1610 | 1045 | 151 | 151 | 128 | 128 | | 48 | 48 | 261 | |
| | | | | | | | | | | | | | | |
| S1 | C | D16 | 18 | 1200 | 600 | 300 | 300 | | | | | | 34 | |
| S2 | C | D16 | 14 | 1400 | 800 | 300 | 300 | | | | | | 31 | |
| S3 | M | D16 | 2 | 3510 | 632 | 832 | 880 | 680 | 240 | 240 | | | 11 | |
| | | | | | | | | | | | | | | |

| SYMBOL | SHAPE | DIAMETER | NUMBER (NOS) | LENGTH (mm) | a (mm) | b (mm) | c (mm) | d (mm) | e (mm) | f (mm) | R1 (mm) | R2 (mm) | WEIGHT (kg) | REMARKS |
|---|---|---|---|---|---|---|---|---|---|---|---|---|---|---|
| L1 | B | D25 | 1 | 4900 | 4229 | 665 | | | | | | | 20 | |
| L2 | B | D25 | 11 | 4890 | 4224 | 665 | | | | | | | 214 | |
| L3 | B | D25 | 12 | 6100 | 5724 | 375 | | | | | | | 291 | |
| L4 | E | D25 | 6 | 2350 | 1600 | 375 | 375 | | | | | | 56 | |
| L5 | E | D25 | 12 | 4470 | 3720 | 375 | 375 | | | | | | 213 | |
| L6 | B | D16 | 1 | 4470 | 4225 | 240 | | | | | | | 7 | |
| L7 | B | D16 | 11 | 4460 | 4219 | 240 | | | | | | | 77 | |
| L8 | B | D16 | 12 | 5960 | 5719 | 240 | | | | | | | 112 | |
| L9 | B | D32 | 16 | 7890 | ***7401*** | 480 | | | | | | | 786 | ***AVERAGE*** |
| L10 | B | D19 | 16 | 7690 | ***7401*** | 285 | | | | | | | 277 | ***AVERAGE*** |
| L11 | C | D13 | 23 | 740 | 346 | 195 | 195 | | | | | | 17 | |
| L12 | C | D13 | 16 | 740 | 346 | 195 | 195 | | | | | | 12 | |
| L13 | C | D13 | 39 | 770 | 380 | 195 | 195 | | | | | | 30 | |
| | | | | | | | | | | | | | | |
| R1 | B | D25 | 1 | 4900 | 4229 | 665 | | | | | | | 20 | |
| R2 | B | D25 | 10 | 4890 | 4224 | 665 | | | | | | | 195 | |
| R3 | B | D25 | 12 | 6100 | 5724 | 375 | | | | | | | 291 | |
| R4 | E | D25 | 6 | 2350 | 1600 | 375 | 375 | | | | | | 56 | |
| R5 | E | D25 | 12 | 4470 | 3720 | 375 | 375 | | | | | | 213 | |
| R6 | B | D16 | 1 | 4470 | 4225 | 240 | | | | | | | 7 | |
| R7 | B | D16 | 10 | 4460 | 4219 | 240 | | | | | | | 70 | |
| R8 | B | D16 | 12 | 5960 | 5719 | 240 | | | | | | | 112 | |
| R9 | B | D32 | 16 | 7750 | ***7270*** | 480 | | | | | | | 772 | ***AVERAGE*** |
| R10 | B | D19 | 16 | 7560 | ***7270*** | 285 | | | | | | | 272 | ***AVERAGE*** |
| R11 | C | D13 | 22 | 740 | 346 | 195 | 195 | | | | | | 16 | |
| R12 | C | D13 | 16 | 740 | 346 | 195 | 195 | | | | | | 12 | |
| R13 | C | D13 | 39 | 770 | 380 | 195 | 195 | | | | | | 30 | |
| | | | | | | | | | | | | | | |
| K1 | Q | D25 | 8 | 1510 | 250 | 368 | 368 | 260 | 260 | | | | 48 | |
| K2 | R | D25 | 8 | 1150 | 260 | 260 | 368 | 260 | | | | | 37 | |
| | | | | | | | | | | | | | | |

## SUMMARY

| DIAMETER | WEIGHT (kg) | MECHANICAL SPLIOE (NOS) |
|---|---|---|
| D13 | 281 | 0 |
| D16 | 2583 | 0 |
| D19 | 2126 | 0 |
| D22 | 2457 | 0 |
| D25 | 2558 | 0 |
| D29 | 1156 | 0 |
| D32 | 2983 | 0 |
| D35 | 0 | 0 |
| D38 | 0 | 0 |
| D41 | 0 | 0 |
| D51 | 0 | 0 |
| TOTAL | 14144 | 0 |

## SHAPE CODE

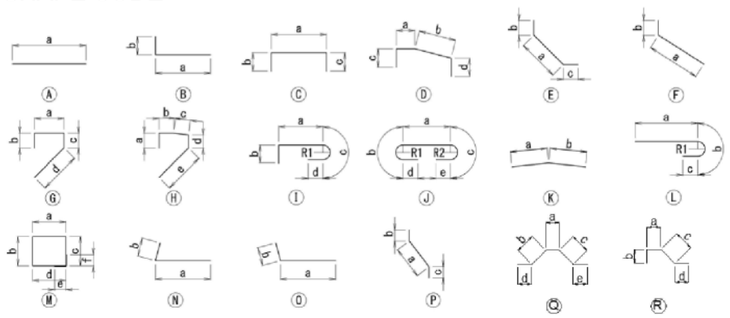


NOTES: 1. Unless otherwise specified in the Contract Documents, a grade of rebar shall be SD 345 or equivalent.

2. A figure in italic font indicate average length of rebar.

| PROJECT NAME | FINANCED BY | COUNTERPART | JICA STUDY TEAM |
|---|---|---|---|
| DETAILED DESIGN ON BAGO RIVER BRIDGE CONSTRUCTION PROJECT | JAPAN INTERNATIONAL COOPERATION AGENCY | REPUBLIC OF THE UNION OF MYANMAR MINISTRY OF CONSTRUCTION DEPARTMENT OF BRIDGE | NIPPON KOEI CO., LTD. ORIENTAL CONSULTANTS GLOBAL CO., LTD. METROPOLITAN EXPRESSWAY COMPANY LIMITED CHODAI CO.,LTD. NIPPON ENGINEERING CONSULTANTS CO.,LTD. |

| | NAME | SIGNATURE | DATE |
|---|---|---|---|
| PREPARED BY | M. OHYAMA | 大山満弘 | 15 Jun.2017 |
| CHECKED BY | T. HAYAKAWA | 早川和邦 | 20 Jun.2017 |
| APPROVED BY | Y. SANO | 佐野雅一 | 21 Jun.2017 |

DRAWING TITLE: BAR ARRANGEMENT OF AO1 ABUTMENT (7)

PACKAGE: 1

DWG No.: P1-OR-2107

# BAR ARRANGEMENT OF AO1 ABUTMENT (8)  S =1:100

## 1 - 1

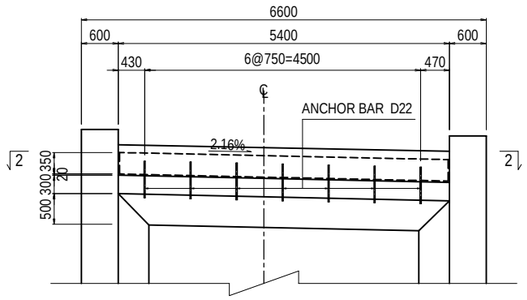


## 2 - 2

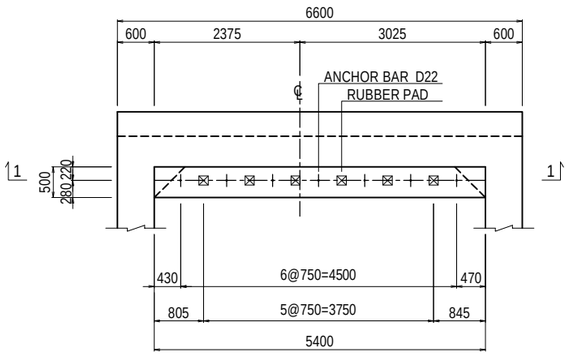


## 3 - 3  4 - 4

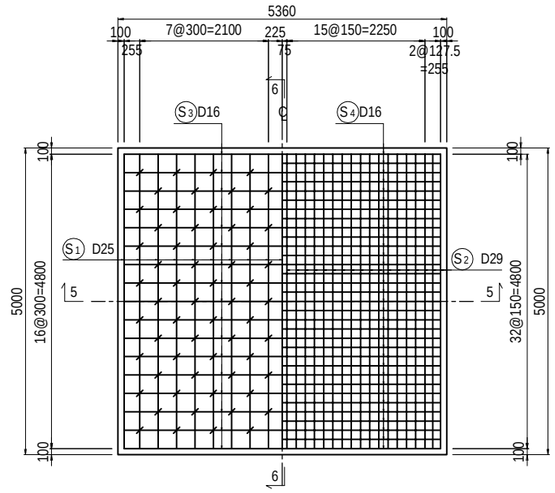


## 5 - 5

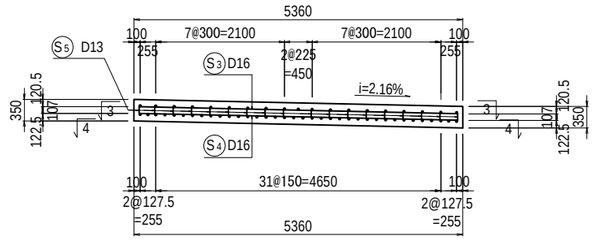


## 6 - 6

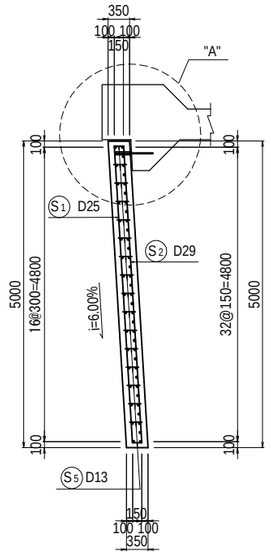


| SYMBOL | DIAMETER | LENGTH (mm) | NUMBER | WEIGHT | SHAPE |
|---|---|---|---|---|---|
| S1 | D25 | 5110 | 19 | 386 | |
| S2 | D29 | 4810 | 36 | 873 | |
| S3 | D16 | 5380 | 17 | 143 | |
| S4 | D16 | 5170 | 33 | 266 | |
| S5 | D13 | 590 | 120 | 70 | |
| S6 | D13 | 300 | 56 | 17 | |
| | | | D29 | 873kg | |
| | | | D25 | 386kg | |
| | | | D16 | 409kg | |
| | | | D13 | 87kg | |
| | | | Total | 1755kg | |
| | | | | | |
| S7 | D10 | 940 | 7 | 4 | |
| ANCHOR CAP | 50A | 230 | 7 | 9 | SGP |
| PL | Ø70x3.2 | | 7 | 1 | |
| | | | Total | 14kg | |

## DETAIL "B"  S=1:20

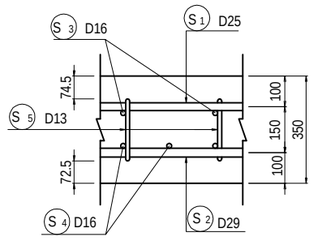


## DETAIL "A"  S=1:40

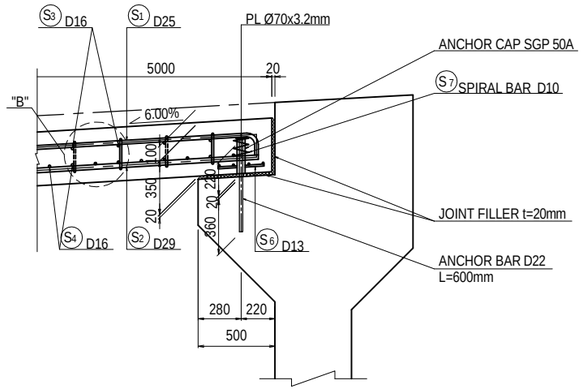


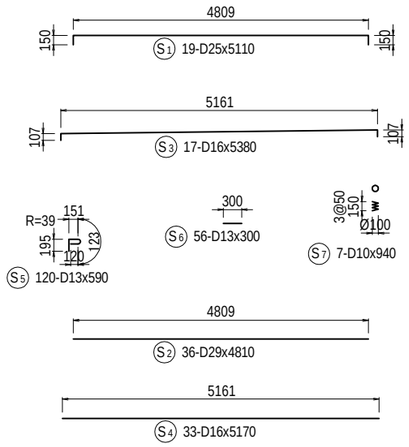


## DETAIL "C"  S=1:20

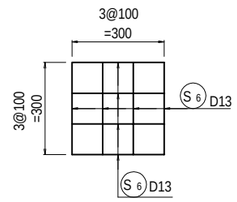


## KEY PLAN

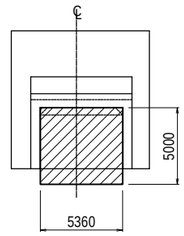


| PROJECT NAME | FINANCED BY | COUNTERPART | JICA STUDY TEAM |
|---|---|---|---|
| DETAILED DESIGN ON BAGO RIVER BRIDGE CONSTRUCTION PROJECT | JAPAN INTERNATIONAL COOPERATION AGENCY | REPUBLIC OF THE UNION OF MYANMAR MINISTRY OF CONSTRUCTION DEPARTMENT OF BRIDGE | NIPPON KOEI CO., LTD. ORIENTAL CONSULTANTS GLOBAL CO., LTD. METROPOLITAN EXPRESSWAY COMPANY LIMITED CHODAI CO.,LTD. NIPPON ENGINEERING CONSULTANTS CO.,LTD. |

| | NAME | SIGNATURE | DATE |
|---|---|---|---|
| PREPARED BY | M. OHYAMA | 大山満弘 | 15 Jun.2017 |
| CHECKED BY | T. HAYAKAWA | 早川知邦 | 20 Jun.2017 |
| APPROVED BY | Y. SANO | 佐野雅一 | 21 Jun.2017 |

DRAWING TITLE: BAR ARRANGEMENT OF AO1 ABUTMENT (8)

PACKAGE: 1

DWG No.: P1-OR-2108

# BAR ARRANGEMENT OF PO1 PIER (1)

S =1:100

## 1 - 1 2 - 2

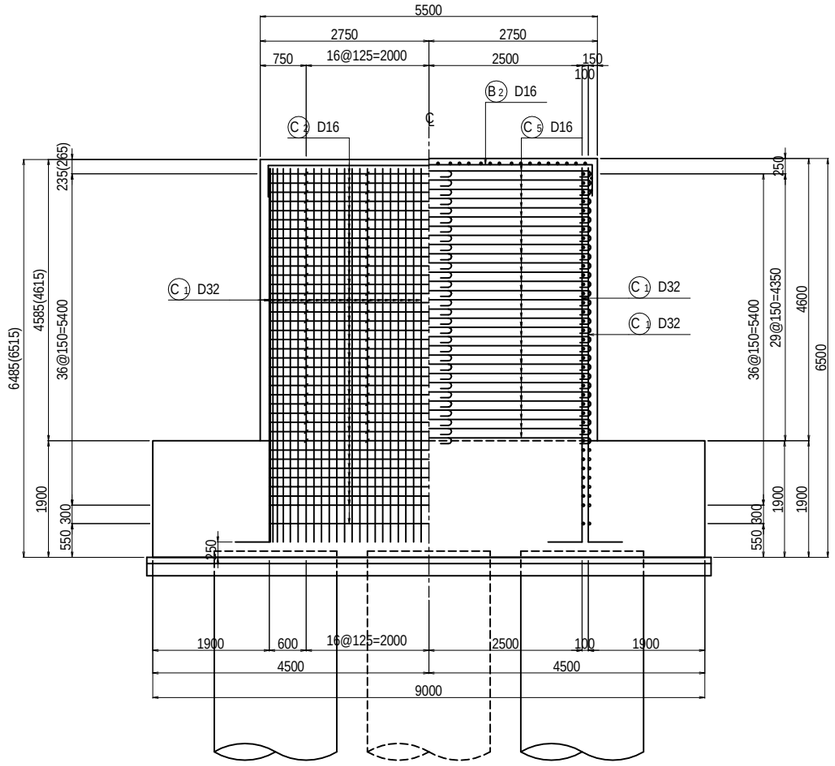


## DETAIL OF BEARING BASE

S=1:60

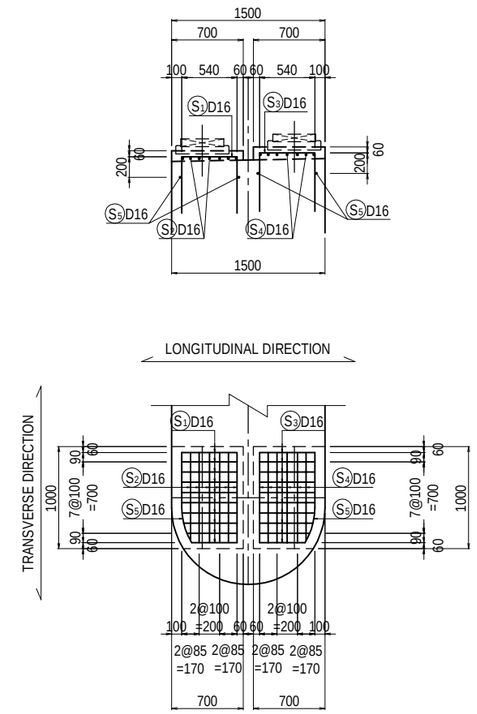


## 3 - 3 4 - 4

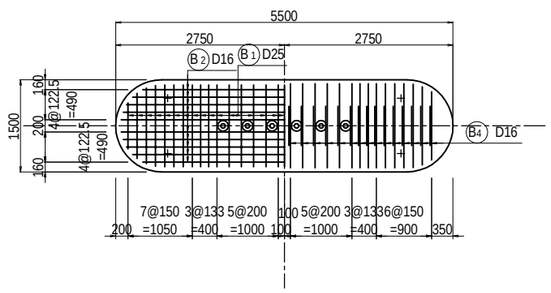


## 5 - 5

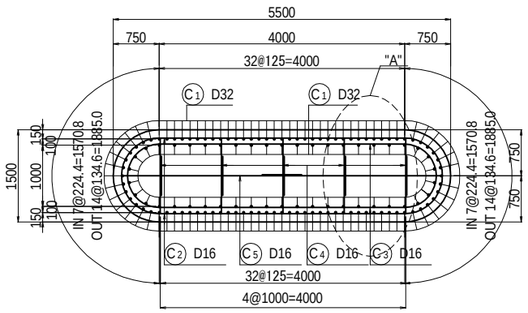


## KEY PLAN

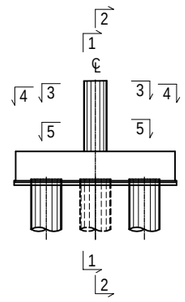


| PROJECT NAME | FINANCED BY | COUNTERPART | JICA STUDY TEAM |
|---|---|---|---|
| DETAILED DESIGN ON BAGO RIVER BRIDGE CONSTRUCTION PROJECT | JAPAN INTERNATIONAL COOPERATION AGENCY | REPUBLIC OF THE UNION OF MYANMAR MINISTRY OF CONSTRUCTION DEPARTMENT OF BRIDGE | NIPPON KOEI CO., LTD. ORIENTAL CONSULTANTS GLOBAL CO., LTD. METROPOLITAN EXPRESSWAY COMPANY LIMITED CHODAI CO.,LTD. NIPPON ENGINEERING CONSULTANTS CO.,LTD. |

| | NAME | SIGNATURE | DATE |
|---|---|---|---|
| PREPARED BY | M. OHYAMA | 大山満弘 | 15 Jun.2017 |
| CHECKED BY | T. HAYAKAWA | 平川知邦 | 20 Jun.2017 |
| APPROVED BY | Y. SANO | 佐野雅一 | 21 Jun.2017 |

| DRAWING TITLE | PACKAGE |
|---|---|
| BAR ARRANGEMENT OF PO1 PIER (1) | 1 |
| | DWG No. |
| | P1-OR-2111 |

# BAR ARRANGEMENT OF PO1 PIER (2)

S =1:100

6 - 6 7 - 7

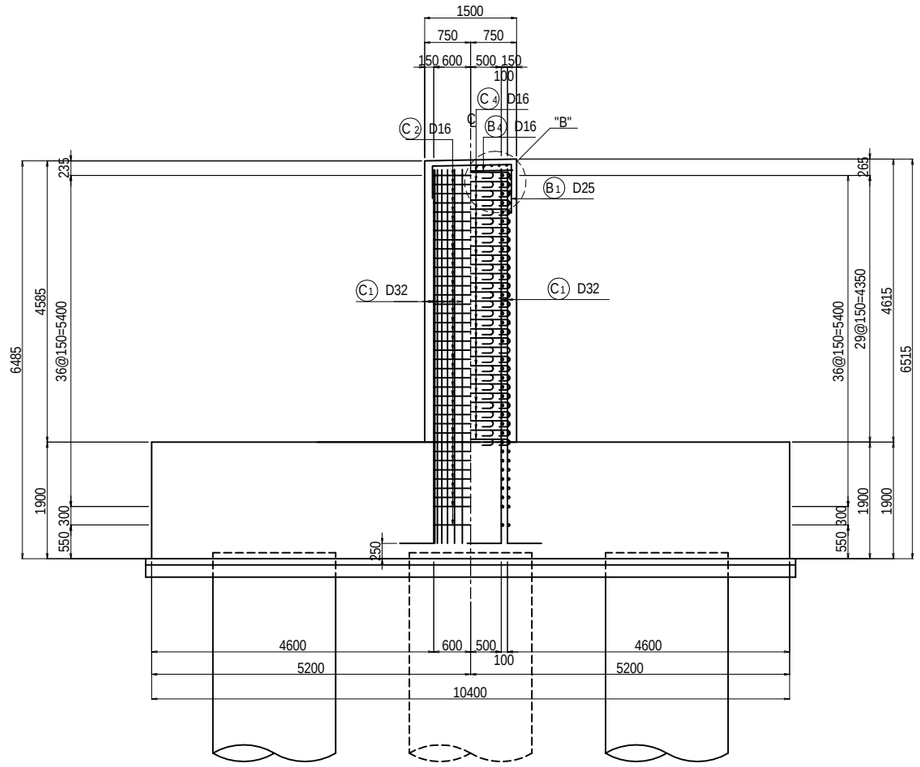


## DETAIL "A" S=1:40

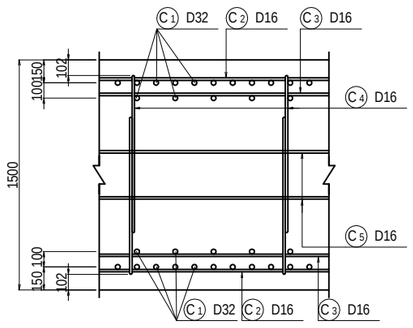


## DETAIL "B" S=1:20

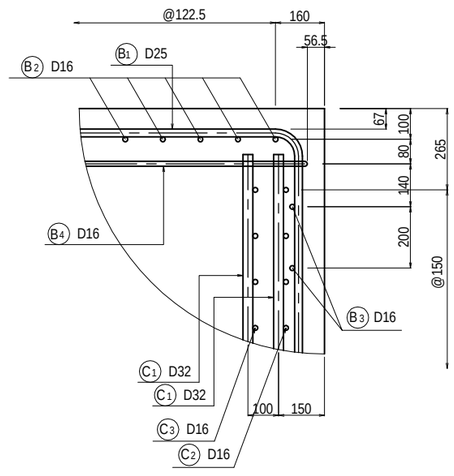


## KEY PLAN

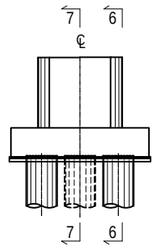


| PROJECT NAME | FINANCED BY | COUNTERPART | JICA STUDY TEAM |
|---|---|---|---|
| DETAILED DESIGN ON BAGO RIVER BRIDGE CONSTRUCTION PROJECT | JAPAN INTERNATIONAL COOPERATION AGENCY | REPUBLIC OF THE UNION OF MYANMAR MINISTRY OF CONSTRUCTION DEPARTMENT OF BRIDGE | NIPPON KOEI CO., LTD. ORIENTAL CONSULTANTS GLOBAL CO., LTD. METROPOLITAN EXPRESSWAY COMPANY LIMITED CHODAI CO.,LTD. NIPPON ENGINEERING CONSULTANTS CO.,LTD. |

| | NAME | SIGNATURE | DATE |
|---|---|---|---|
| PREPARED BY | M. OHYAMA | 大山満弘 | 15 Jun.2017 |
| CHECKED BY | T. HAYAKAWA | 早川知邦 | 20 Jun.2017 |
| APPROVED BY | Y. SANO | 佐野雅一 | 21 Jun.2017 |

| DRAWING TITLE | PACKAGE |
|---|---|
| BAR ARRANGEMENT OF PO1 PIER (2) | 1 |
| | DWG No. |
| | P1-OR-2112 |

# BAR ARRANGEMENT OF PO1 PIER (3)

S =1:100

## 1 - 1

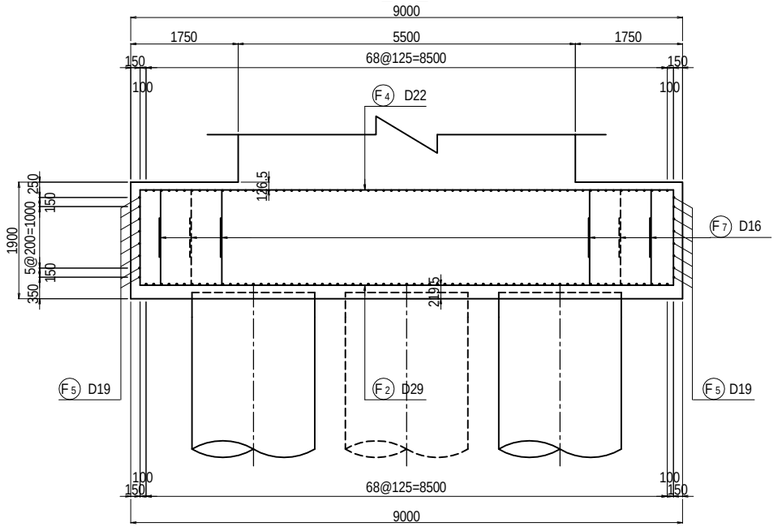


## 2 - 2

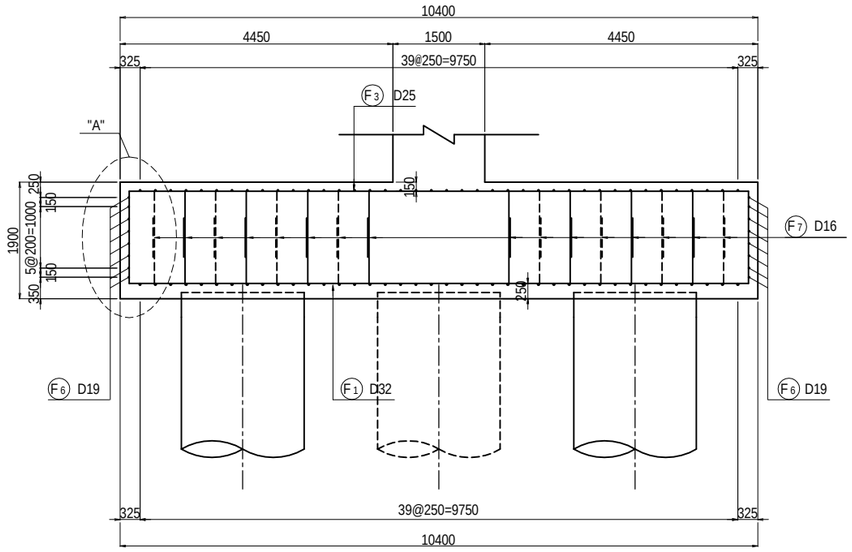


## DETAIL "A"

S=1:40

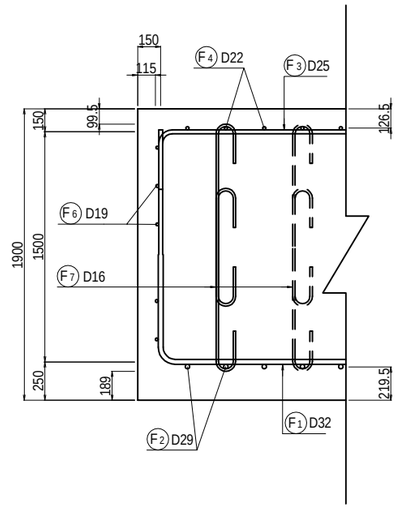


## 3 - 3

## 4 - 4

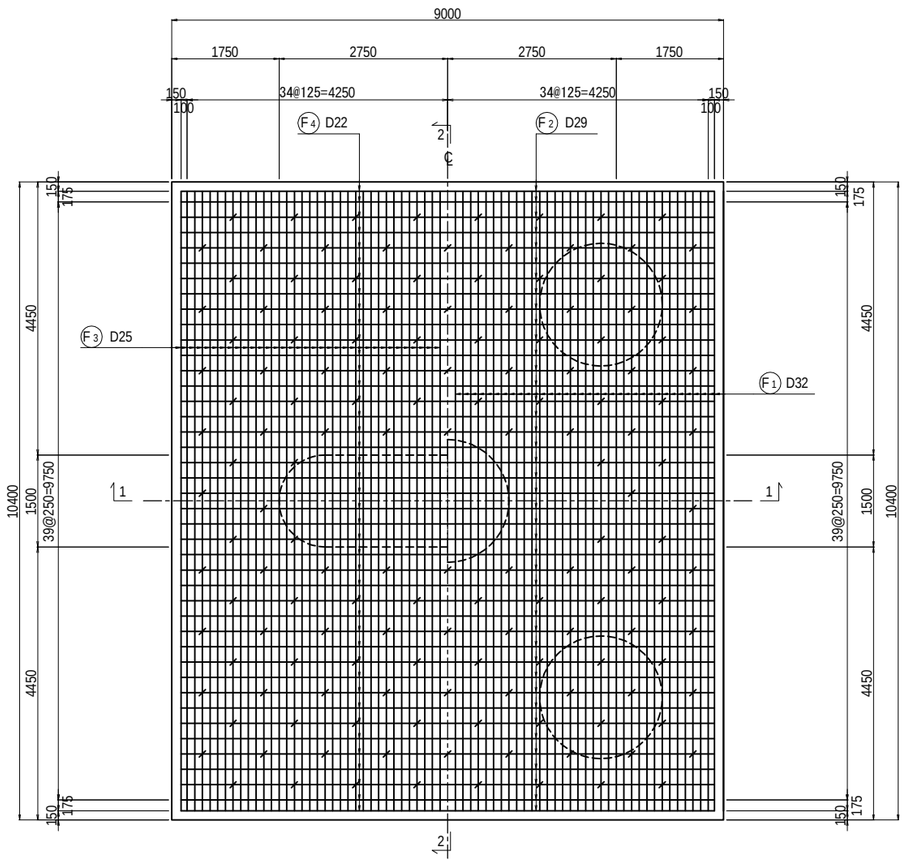


TRANSVERSAL

## KEY PLAN

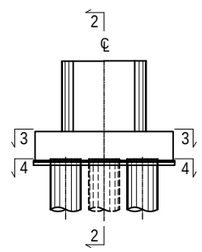


| PROJECT NAME | FINANCED BY | COUNTERPART | JICA STUDY TEAM |
|---|---|---|---|
| DETAILED DESIGN ON BAGO RIVER BRIDGE CONSTRUCTION PROJECT | JAPAN INTERNATIONAL COOPERATION AGENCY | REPUBLIC OF THE UNION OF MYANMAR MINISTRY OF CONSTRUCTION DEPARTMENT OF BRIDGE | NIPPON KOEI CO., LTD. ORIENTAL CONSULTANTS GLOBAL CO., LTD. METROPOLITAN EXPRESSWAY COMPANY LIMITED CHODAI CO.,LTD. NIPPON ENGINEERING CONSULTANTS CO.,LTD. |

| | NAME | SIGNATURE | DATE |
|---|---|---|---|
| PREPARED BY | M. OHYAMA | 大山満弘 | 15 Jun.2017 |
| CHECKED BY | T. HAYAKAWA | 早川知邦 | 20 Jun.2017 |
| APPROVED BY | Y. SANO | 佐野裕一 | 21 Jun.2017 |

| DRAWING TITLE | PACKAGE |
|---|---|
| BAR ARRANGEMENT OF PO1 PIER (3) | 1 |
| | DWG No. |
| | P1-OR-2113 |

# BAR ARRANGEMENT OF PO1 PIER (4)

## BAR QUANTITY

| SYMBOL | SHAPE | DIAMETER | NUMBER (NOS) | LENGTH (mm) | a (mm) | b (mm) | c (mm) | d (mm) | e (mm) | f (mm) | g (mm) | h (mm) | i (mm) | R1 (mm) | R2 (mm) | WEIGHT (kg) | REMARKS |
|---|---|---|---|---|---|---|---|---|---|---|---|---|---|---|---|---|---|
| B1 | D | D25 | 33 | 2860 | 1272 | 790 | 790 | | | | | | | | | 376 | AVERAGE |
| B2 | D | D16 | 10 | 6080 | 5053 | 510 | 510 | | | | | | | | | 95 | AVERAGE |
| B3 | E | D16 | 4 | 7360 | 1423 | 240 | 2025 | 3423 | 240 | | | | | 645 | | 46 | |
| B4 | I | D16 | 62 | 1570 | 1006 | 151 | 151 | 128 | 128 | | | | | 48 | 48 | 152 | |
| | | | | | | | | | | | | | | | | | |
| S1 | D | D16 | 20 | 1640 | 540 | 550 | 550 | | | | | | | | | 51 | |
| S2 | D | D16 | 14 | 1980 | 880 | 550 | 550 | | | | | | | | | 43 | |
| S3 | D | D16 | 20 | 1680 | 540 | 570 | 570 | | | | | | | | | 52 | |
| S4 | D | D16 | 14 | 2020 | 880 | 570 | 570 | | | | | | | | | 44 | |
| S5 | S | D16 | 4 | 3470 | 572 | 556 | 376 | 960 | 517 | 240 | 240 | | | 666 | | 22 | |
| | | | | | | | | | | | | | | | | | |
| C1 | B | D32 | 138 | 6660 | 6100 | 555 | | | | | | | | | | 5726 | AVERAGE |
| C2 | E | D16 | 76 | 7290 | 1423 | 240 | 1960 | 3423 | 240 | | | | | 624 | | 864 | |
| C3 | E | D16 | 76 | 6980 | 1423 | 240 | 1646 | 3423 | 240 | | | | | 524 | | 828 | |
| C4 | I | D16 | 300 | 1470 | 912 | 151 | 151 | 128 | 128 | | | | | 48 | 48 | 687 | |
| C5 | I | D16 | 60 | 3470 | 2912 | 151 | 151 | 128 | 128 | | | | | 48 | 48 | 325 | |
| | | | | | | | | | | | | | | | | | |
| F1-1 | B | D32 | 71 | 8000 | 6500 | 1500 | | | | | | | | | | 3539 | |
| F1-2 | B | D32 | 71 | 6110 | 4610 | 1500 | | | | | | | | | | 2703 | |
| F2 | D | D29 | 40 | 11810 | 8700 | 1554 | 1554 | | | | | | | | | 2381 | |
| F3 | D | D25 | 71 | 10850 | 10100 | 375 | 375 | | | | | | | | | 3066 | |
| F4 | D | D22 | 40 | 9360 | 8700 | 330 | 330 | | | | | | | | | 1138 | |
| F5 | A | D19 | 16 | 10160 | 10151 | | | | | | | | | | | 366 | |
| F6 | A | D19 | 16 | 8750 | 8748 | | | | | | | | | | | 315 | |
| F7 | I | D16 | 296 | 1630 | 1070 | 151 | 151 | 128 | 128 | | | | | 48 | 48 | 752 | |
| | | | | | | | | | | | | | | | | | |

## SUMMARY

| DIAMETER | WEIGHT (kg) | MECHANICAL SPLIOE (NOS) |
|---|---|---|
| D13 | 0 | 0 |
| D16 | 3961 | 0 |
| D19 | 681 | 0 |
| D22 | 1138 | 0 |
| D25 | 3442 | 0 |
| D29 | 2381 | 0 |
| D32 | 11968 | 0 |
| D35 | 0 | 0 |
| D38 | 0 | 0 |
| D41 | 0 | 0 |
| D51 | 0 | 0 |
| TOTAL | 23571 | 0 |

## SHAPE CODE

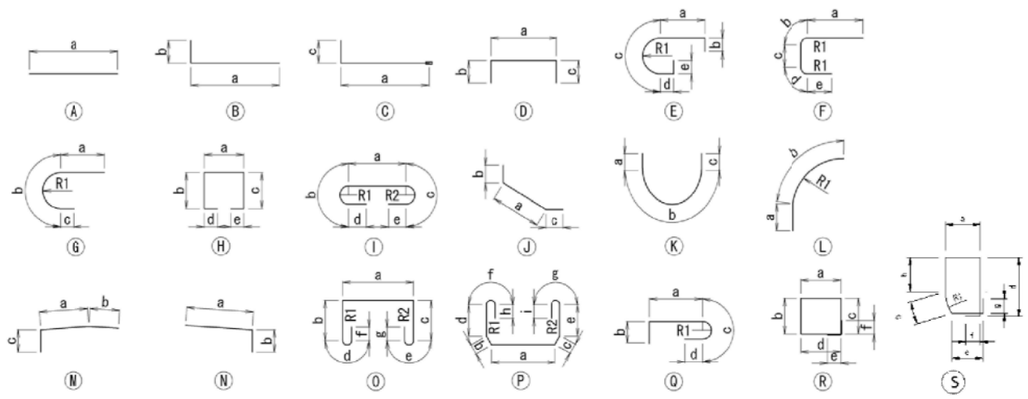


NOTES: 1. Unless otherwise specified in the Contract Documents, a grade of rebar shall be SD 345 or equivalent.

2. A figure in italic font indicate average length of rebar.

| PROJECT NAME | FINANCED BY | COUNTERPART | JICA STUDY TEAM |
|---|---|---|---|
| DETAILED DESIGN ON BAGO RIVER BRIDGE CONSTRUCTION PROJECT | JAPAN INTERNATIONAL COOPERATION AGENCY | REPUBLIC OF THE UNION OF MYANMAR MINISTRY OF CONSTRUCTION DEPARTMENT OF BRIDGE | NIPPON KOEI CO., LTD. ORIENTAL CONSULTANTS GLOBAL CO., LTD. METROPOLITAN EXPRESSWAY COMPANY LIMITED CHODAI CO.,LTD. NIPPON ENGINEERING CONSULTANTS CO.,LTD. |

| | NAME | SIGNATURE | DATE |
|---|---|---|---|
| PREPARED BY | M. OHYAMA | | 15 Jun.2017 |
| CHECKED BY | T. HAYAKAWA | | 20 Jun.2017 |
| APPROVED BY | Y. SANO | | 21 Jun.2017 |

DRAWING TITLE: BAR ARRANGEMENT OF PO1 PIER (4)

PACKAGE: 1

DWG No.: P1-OR-2114

# BAR ARRANGEMENT OF PO2 PIER (1)

S =1:100

## 1 - 1 2 - 2

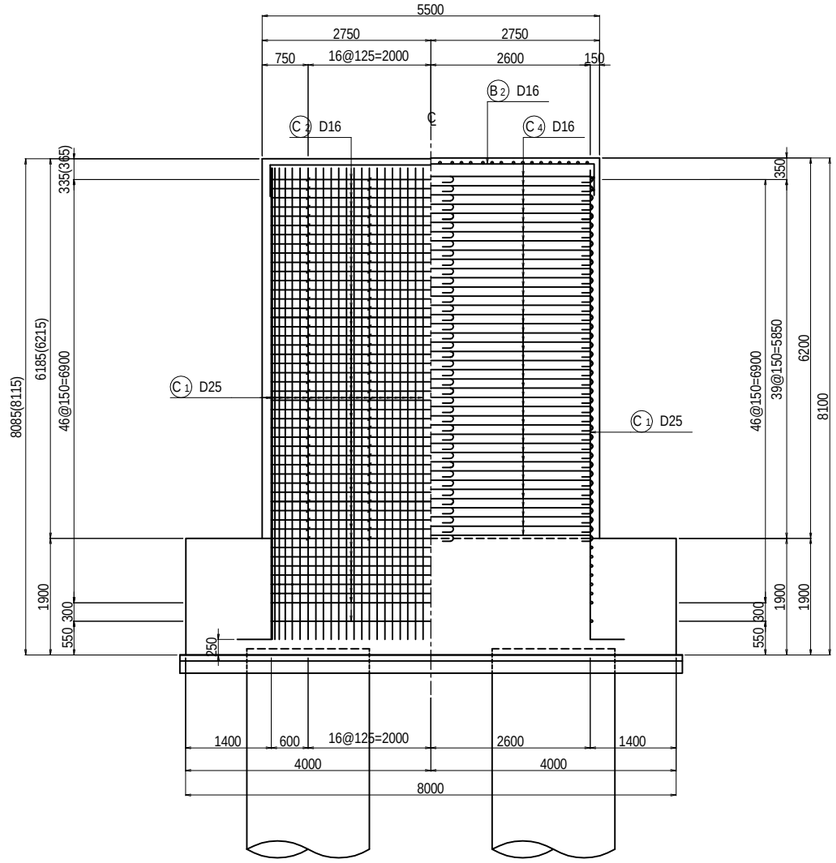


## DETAIL OF BEARING BASE S=1:60

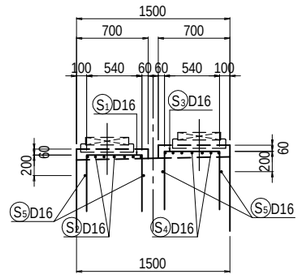


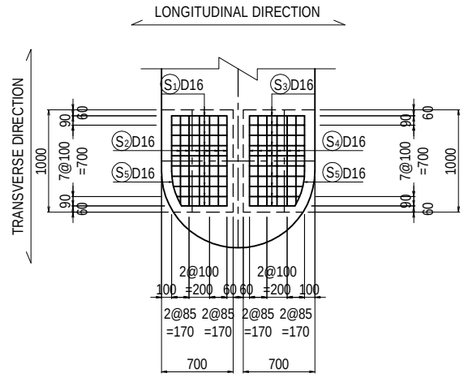


## 3 - 3 4 - 4

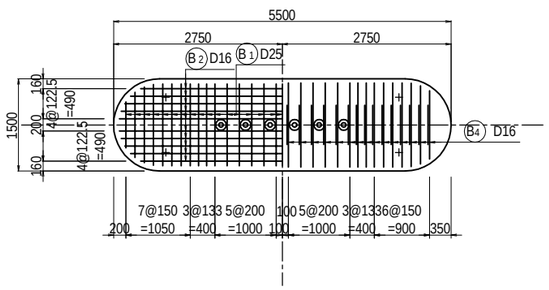


## 5 - 5

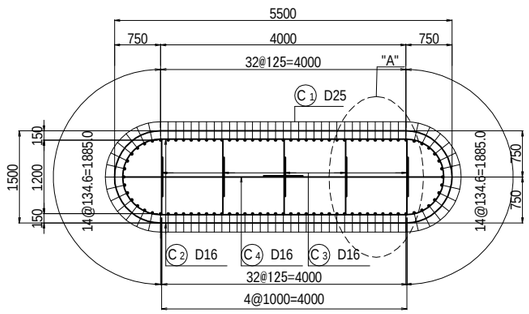


## KEY PLAN

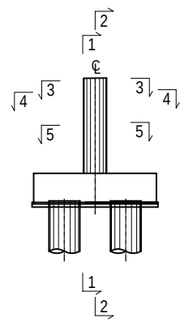


| PROJECT NAME | FINANCED BY | COUNTERPART | JICA STUDY TEAM |
|---|---|---|---|
| DETAILED DESIGN ON BAGO RIVER BRIDGE CONSTRUCTION PROJECT | JAPAN INTERNATIONAL COOPERATION AGENCY | REPUBLIC OF THE UNION OF MYANMAR MINISTRY OF CONSTRUCTION DEPARTMENT OF BRIDGE | NIPPON KOEI CO., LTD. ORIENTAL CONSULTANTS GLOBAL CO., LTD. METROPOLITAN EXPRESSWAY COMPANY LIMITED CHODAI CO.,LTD. NIPPON ENGINEERING CONSULTANTS CO.,LTD. |

| | NAME | SIGNATURE | DATE |
|---|---|---|---|
| PREPARED BY | M. OHYAMA | | 15 Jun.2017 |
| CHECKED BY | T. HAYAKAWA | | 20 Jun.2017 |
| APPROVED BY | Y. SANO | | 21 Jun.2017 |

| DRAWING TITLE | PACKAGE |
|---|---|
| BAR ARRANGEMENT OF PO2 PIER (1) | 1 |
| | DWG No. |
| | P1-OR-2121 |

# BAR ARRANGEMENT OF PO2 PIER (2)

S =1:100

6 - 6 7 - 7

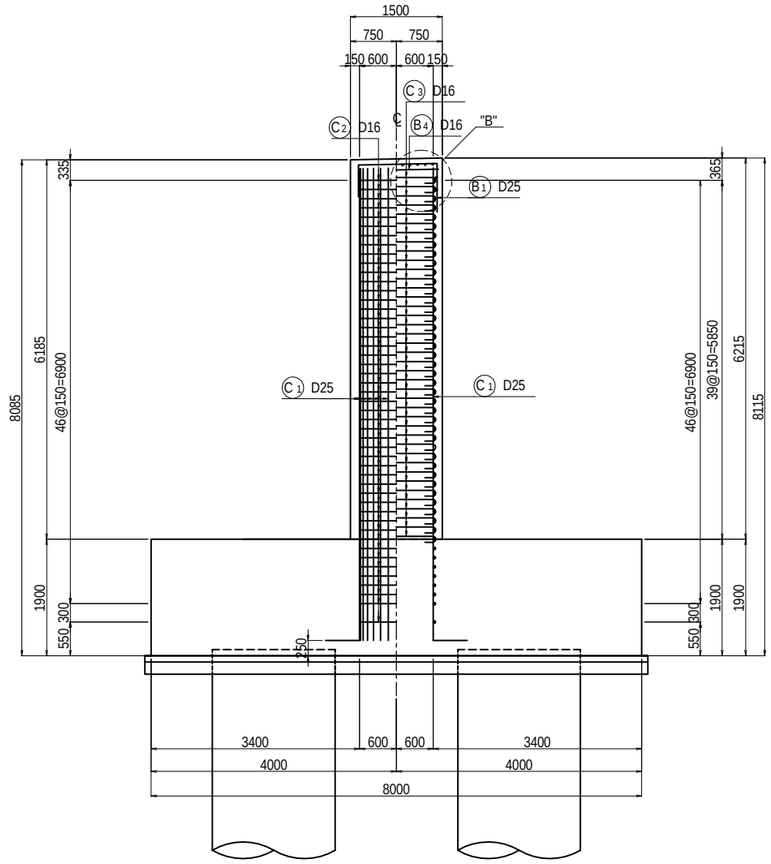


## DETAIL "A" S=1:40

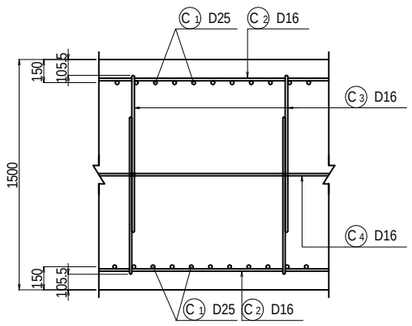


## DETAIL "B" S=1:20

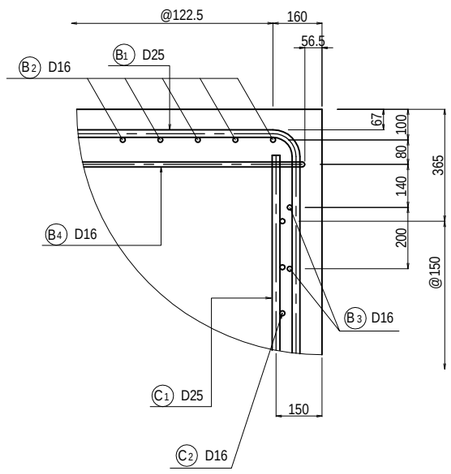


## KEY PLAN

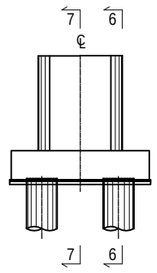


| PROJECT NAME | FINANCED BY | COUNTERPART | JICA STUDY TEAM |
|---|---|---|---|
| DETAILED DESIGN ON BAGO RIVER BRIDGE CONSTRUCTION PROJECT | JAPAN INTERNATIONAL COOPERATION AGENCY | REPUBLIC OF THE UNION OF MYANMAR MINISTRY OF CONSTRUCTION DEPARTMENT OF BRIDGE | NIPPON KOEI CO., LTD. ORIENTAL CONSULTANTS GLOBAL CO., LTD. METROPOLITAN EXPRESSWAY COMPANY LIMITED CHODAI CO.,LTD. NIPPON ENGINEERING CONSULTANTS CO.,LTD. |

| | NAME | SIGNATURE | DATE |
|---|---|---|---|
| PREPARED BY | M. OHYAMA | 大山 満弘 | 15 Jun.2017 |
| CHECKED BY | T. HAYAKAWA | 早川 知彦 | 20 Jun.2017 |
| APPROVED BY | Y. SANO | 佐野 雅一 | 21 Jun.2017 |

| DRAWING TITLE | PACKAGE |
|---|---|
| BAR ARRANGEMENT OF PO2 PIER (2) | 1 |
| | DWG No. |
| | P1-OR-2122 |

# BAR ARRANGEMENT OF PO2 PIER (3)

S =1:100

## 1 - 1

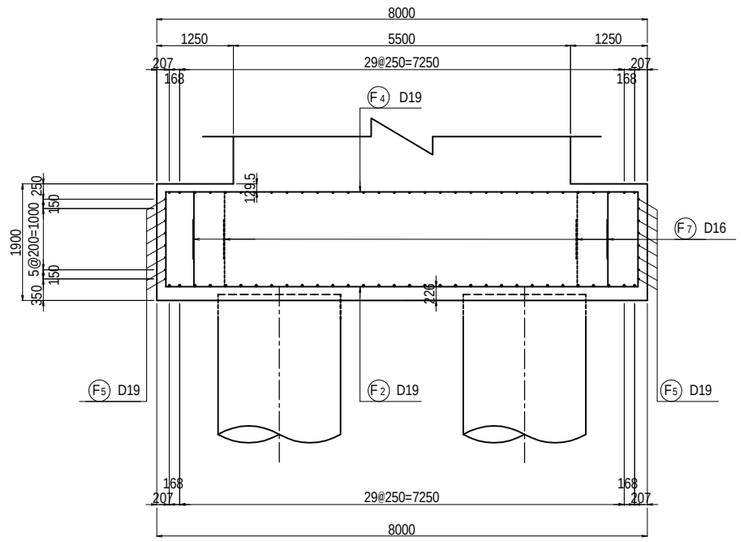


## 2 - 2

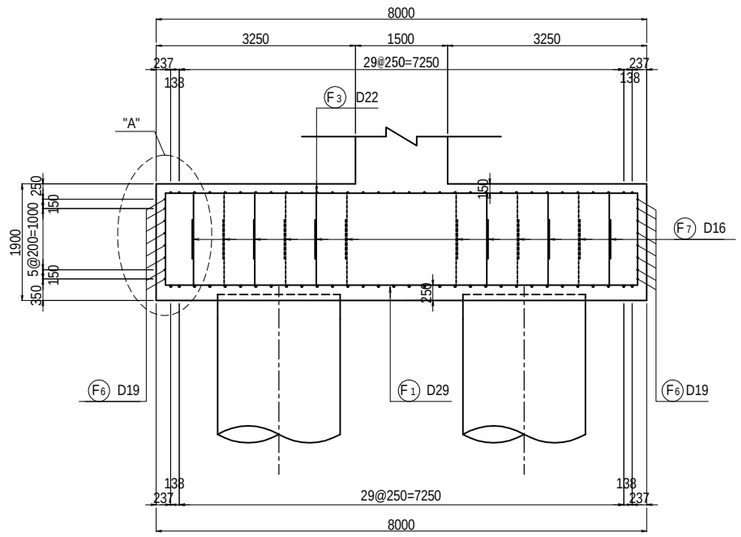


## DETAIL "A"

S=1:40

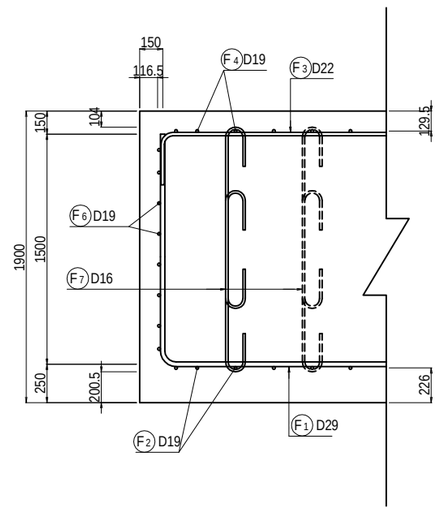


## 3 - 3 4 - 4

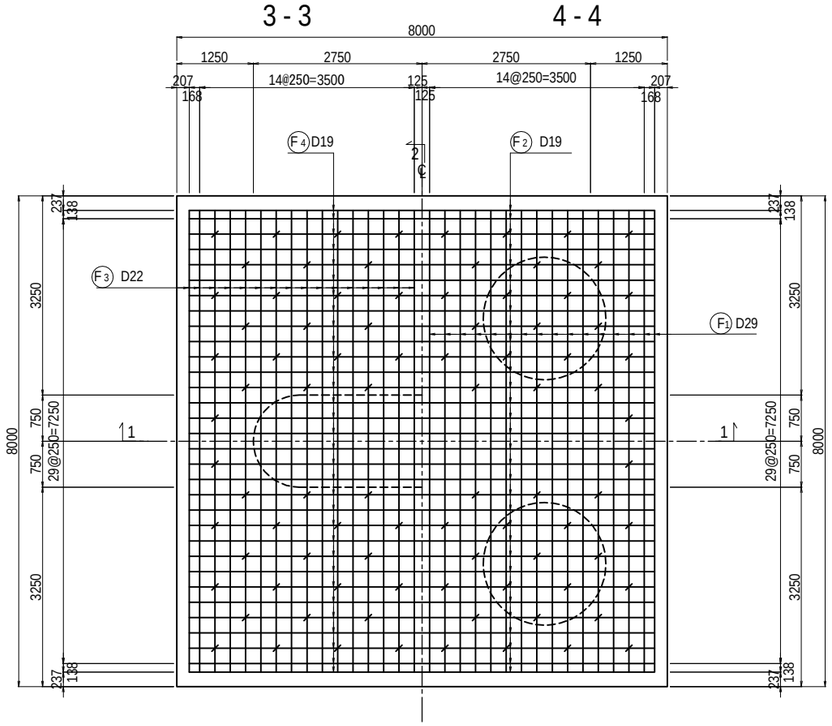


TRANSVERSAL

## KEY PLAN

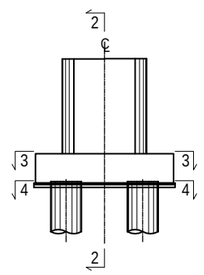


| PROJECT NAME | FINANCED BY | COUNTERPART | JICA STUDY TEAM |
|---|---|---|---|
| DETAILED DESIGN ON BAGO RIVER BRIDGE CONSTRUCTION PROJECT | JAPAN INTERNATIONAL COOPERATION AGENCY | REPUBLIC OF THE UNION OF MYANMAR MINISTRY OF CONSTRUCTION DEPARTMENT OF BRIDGE | NIPPON KOEI CO., LTD. ORIENTAL CONSULTANTS GLOBAL CO., LTD. METROPOLITAN EXPRESSWAY COMPANY LIMITED CHODAI CO.,LTD. NIPPON ENGINEERING CONSULTANTS CO.,LTD. |

| | NAME | SIGNATURE | DATE |
|---|---|---|---|
| PREPARED BY | M. OHYAMA | 大山満弘 | 15 Jun.2017 |
| CHECKED BY | T. HAYAKAWA | 平川知彦 | 20 Jun.2017 |
| APPROVED BY | Y. SANO | 佐野雅一 | 21 Jun.2017 |

| DRAWING TITLE | PACKAGE |
|---|---|
| BAR ARRANGEMENT OF PO2 PIER (3) | 1 |
| | DWG No. |
| | P1-OR-2123 |

# BAR ARRANGEMENT OF PO2 PIER (4)

## BAR QUANTITY

| SYMBOL | SHAPE | DIAMETER | NUMBER (NOS) | LENGTH (mm) | a (mm) | b (mm) | c (mm) | d (mm) | e (mm) | f (mm) | g (mm) | h (mm) | i (mm) | R1 (mm) | R2 (mm) | WEIGHT (kg) | REMARKS |
|---|---|---|---|---|---|---|---|---|---|---|---|---|---|---|---|---|---|
| B1 | D | D25 | 33 | 2860 | 1272 | 790 | 790 | | | | | | | | | 376 | AVERAGE |
| B2 | D | D16 | 10 | 6080 | 5053 | 510 | 510 | | | | | | | | | 95 | AVERAGE |
| B3 | E | D16 | 4 | 7360 | 1423 | 240 | 2025 | 3423 | 240 | | | | | 645 | | 46 | |
| B4 | I | D16 | 62 | 1570 | 1006 | 151 | 151 | 128 | 128 | | | | | 48 | 48 | 152 | |
| | | | | | | | | | | | | | | | | | |
| S1 | D | D16 | 20 | 1640 | 540 | 550 | 550 | | | | | | | | | 51 | |
| S2 | D | D16 | 14 | 1980 | 880 | 550 | 550 | | | | | | | | | 43 | |
| S3 | D | D16 | 20 | 1680 | 540 | 570 | 570 | | | | | | | | | 52 | |
| S4 | D | D16 | 14 | 2020 | 880 | 570 | 570 | | | | | | | | | 44 | |
| S5 | S | D16 | 4 | 3470 | 572 | 556 | 376 | 960 | 517 | 240 | 240 | | | 666 | | 22 | |
| | | | | | | | | | | | | | | | | | |
| C1 | B | D25 | 92 | 8260 | 7700 | 555 | | | | | | | | | | 3024 | AVERAGE |
| C2 | E | D16 | 96 | 7280 | 3423 | 240 | 1949 | 1423 | 240 | | | | | 621 | | 1091 | |
| C3 | I | D16 | 400 | 1470 | 909 | 151 | 151 | 128 | 128 | | | | | 48 | 48 | 916 | |
| C4 | I | D16 | 80 | 3470 | 2909 | 151 | 151 | 128 | 128 | | | | | 48 | 48 | 433 | |
| | | | | | | | | | | | | | | | | | |
| F1 | D | D29 | 32 | 10700 | 7700 | 1500 | 1500 | | | | | | | | | 1726 | |
| F2 | D | D19 | 32 | 10790 | 7700 | 1545 | 1545 | | | | | | | | | 777 | |
| F3 | D | D22 | 32 | 8360 | 7700 | 330 | 330 | | | | | | | | | 813 | |
| F4 | D | D19 | 32 | 8270 | 7700 | 285 | 285 | | | | | | | | | 596 | |
| F5 | A | D19 | 16 | 7750 | 7748 | | | | | | | | | | | 279 | |
| F6 | A | D19 | 16 | 7740 | 7738 | | | | | | | | | | | 279 | |
| F7 | I | D16 | 176 | 1620 | 1062 | 151 | 151 | 128 | 128 | | | | | 48 | 48 | 445 | |
| | | | | | | | | | | | | | | | | | |

## SUMMARY

| DIAMETER | WEIGHT (kg) | MECHANICAL SPLIOE (NOS) |
|---|---|---|
| D13 | 0 | 0 |
| D16 | 3390 | 0 |
| D19 | 1931 | 0 |
| D22 | 813 | 0 |
| D25 | 3400 | 0 |
| D29 | 1726 | 0 |
| D32 | 0 | 0 |
| D35 | 0 | 0 |
| D38 | 0 | 0 |
| D41 | 0 | 0 |
| D51 | 0 | 0 |
| TOTAL | 11260 | 0 |

## SHAPE CODE

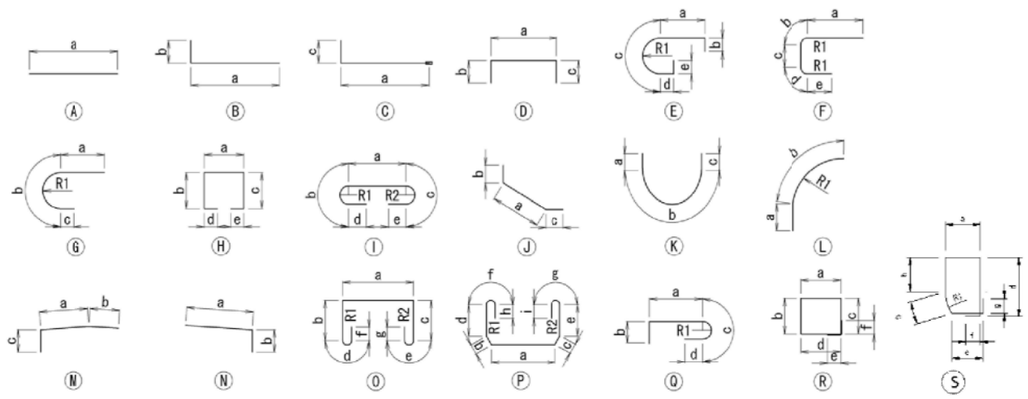


NOTES: 1. Unless otherwise specified in the Contract Documents, a grade of rebar shall be SD 345 or equivalent.

2. A figure in italic font indicate average length of rebar.

| PROJECT NAME | FINANCED BY | COUNTERPART | JICA STUDY TEAM |
|---|---|---|---|
| DETAILED DESIGN ON BAGO RIVER BRIDGE CONSTRUCTION PROJECT | JAPAN INTERNATIONAL COOPERATION AGENCY | REPUBLIC OF THE UNION OF MYANMAR MINISTRY OF CONSTRUCTION DEPARTMENT OF BRIDGE | NIPPON KOEI CO., LTD. ORIENTAL CONSULTANTS GLOBAL CO., LTD. METROPOLITAN EXPRESSWAY COMPANY LIMITED CHODAI CO.,LTD. NIPPON ENGINEERING CONSULTANTS CO.,LTD. |

| | NAME | SIGNATURE | DATE |
|---|---|---|---|
| PREPARED BY | M. OHYAMA | 大山満弘 | 15 Jun.2017 |
| CHECKED BY | T. HAYAKAWA | 早川和男 | 20 Jun.2017 |
| APPROVED BY | Y. SANO | 佐野雅一 | 21 Jun.2017 |

| DRAWING TITLE | PACKAGE |
|---|---|
| BAR ARRANGEMENT OF PO2 PIER (4) | 1 |
| | DWG No. |
| | P1-OR-2124 |

# BAR ARRANGEMENT OF PO3 PIER (1)

S =1:100

## 1 - 1 2 - 2

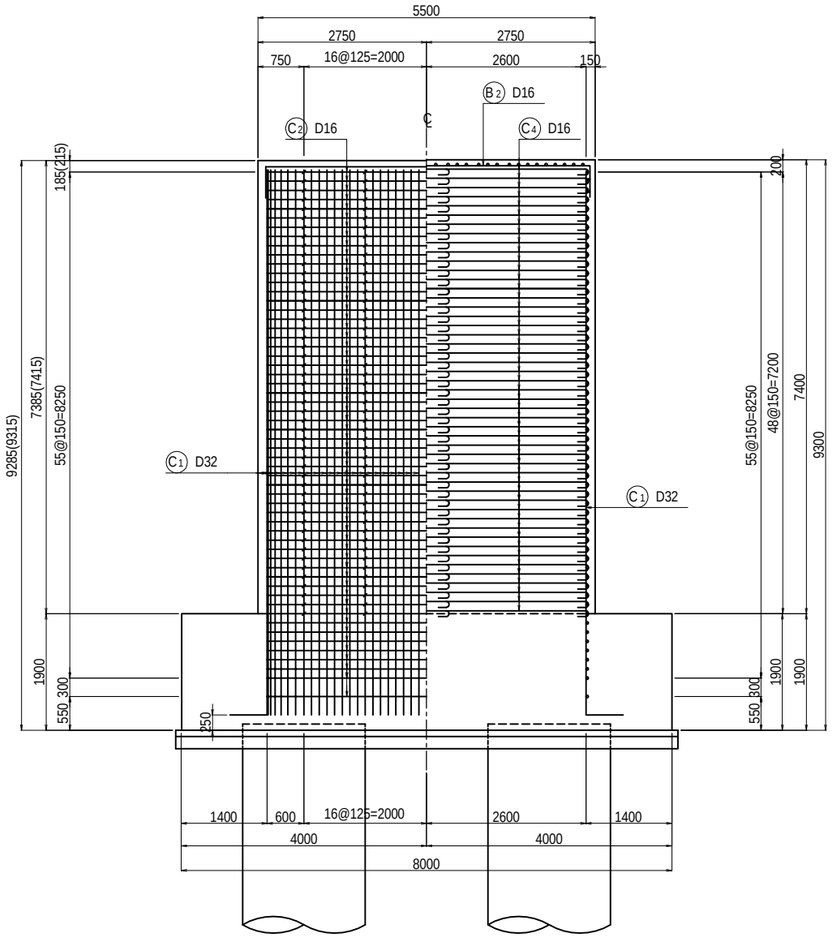


## DETAIL OF BEARING BASE S=1:60

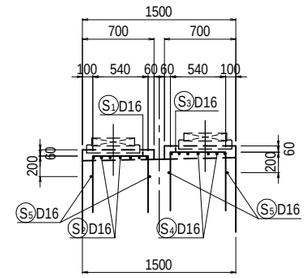


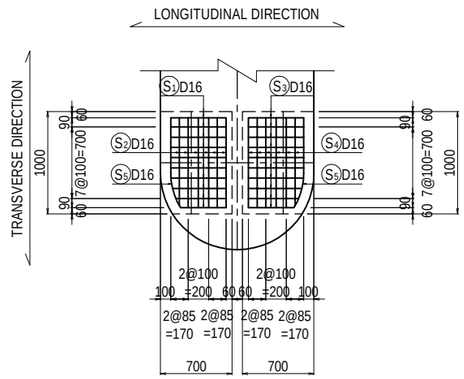


## 3 - 3 4 - 4

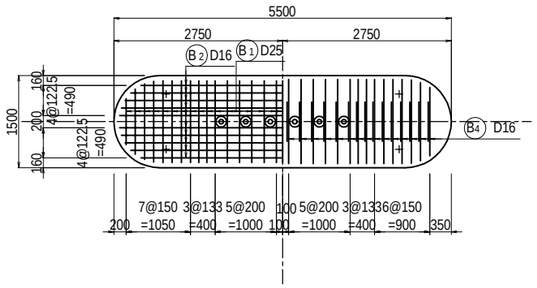


## 5 - 5

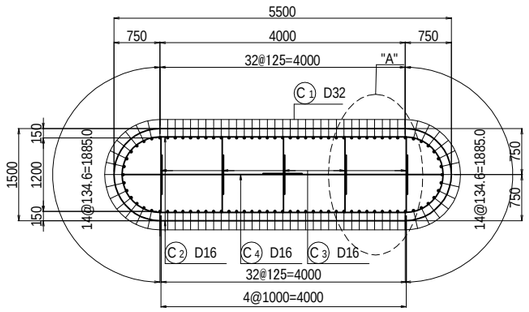


## KEY PLAN

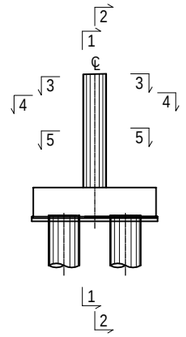


| PROJECT NAME | FINANCED BY | COUNTERPART | JICA STUDY TEAM |
|---|---|---|---|
| DETAILED DESIGN ON BAGO RIVER BRIDGE CONSTRUCTION PROJECT | JAPAN INTERNATIONAL COOPERATION AGENCY | REPUBLIC OF THE UNION OF MYANMAR MINISTRY OF CONSTRUCTION DEPARTMENT OF BRIDGE | NIPPON KOEI CO., LTD. ORIENTAL CONSULTANTS GLOBAL CO., LTD. METROPOLITAN EXPRESSWAY COMPANY LIMITED CHODAI CO.,LTD. NIPPON ENGINEERING CONSULTANTS CO.,LTD. |

| | NAME | SIGNATURE | DATE |
|---|---|---|---|
| PREPARED BY | M. OHYAMA | | 15 Jun.2017 |
| CHECKED BY | T. HAYAKAWA | | 20 Jun.2017 |
| APPROVED BY | Y. SANO | | 21 Jun.2017 |

| DRAWING TITLE | PACKAGE |
|---|---|
| BAR ARRANGEMENT OF PO3 PIER (1) | 1 |
| | DWG No. |
| | P1-OR-2131 |

# BAR ARRANGEMENT OF PO3 PIER (2)

S =1:100

6 - 6 7 - 7

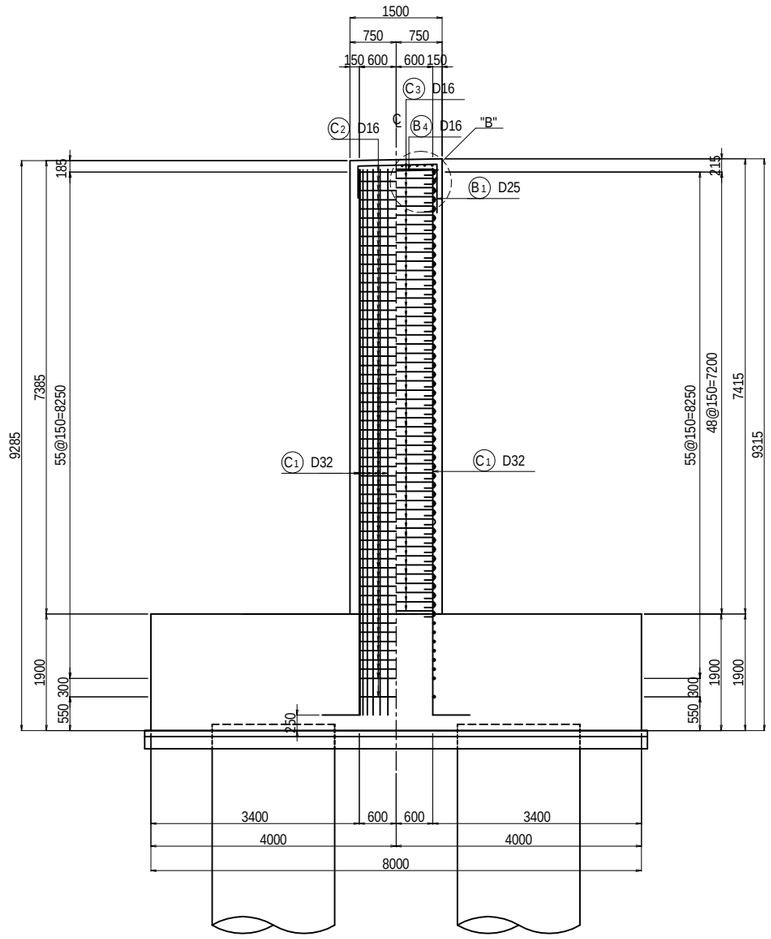


## DETAIL "A" S=1:40

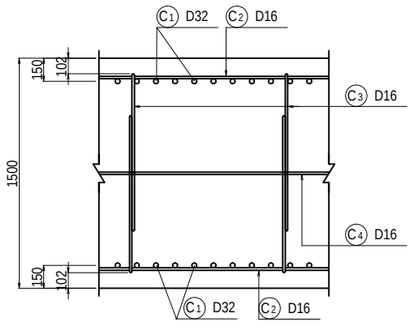


## DETAIL "B" S=1:20

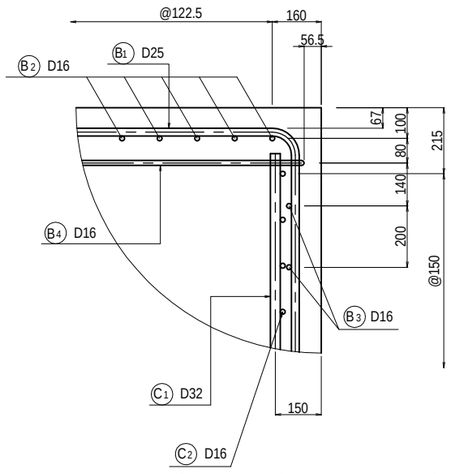


## KEY PLAN

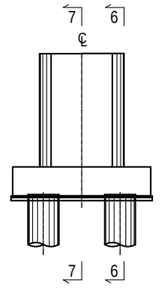


| PROJECT NAME | FINANCED BY | COUNTERPART | JICA STUDY TEAM |
|---|---|---|---|
| DETAILED DESIGN ON BAGO RIVER BRIDGE CONSTRUCTION PROJECT | JAPAN INTERNATIONAL COOPERATION AGENCY | REPUBLIC OF THE UNION OF MYANMAR MINISTRY OF CONSTRUCTION DEPARTMENT OF BRIDGE | NIPPON KOEI CO., LTD. ORIENTAL CONSULTANTS GLOBAL CO., LTD. METROPOLITAN EXPRESSWAY COMPANY LIMITED CHODAI CO.,LTD. NIPPON ENGINEERING CONSULTANTS CO.,LTD. |

| | NAME | SIGNATURE | DATE |
|---|---|---|---|
| PREPARED BY | M. OHYAMA | 大山満弘 | 15 Jun.2017 |
| CHECKED BY | T. HAYAKAWA | 早川知邦 | 20 Jun.2017 |
| APPROVED BY | Y. SANO | 佐野雅一 | 21 Jun.2017 |

| DRAWING TITLE | PACKAGE |
|---|---|
| BAR ARRANGEMENT OF PO3 PIER (2) | 1 |
| | DWG No. |
| | P1-OR-2132 |

# BAR ARRANGEMENT OF PO3 PIER (3)

S =1:100

## 1 - 1

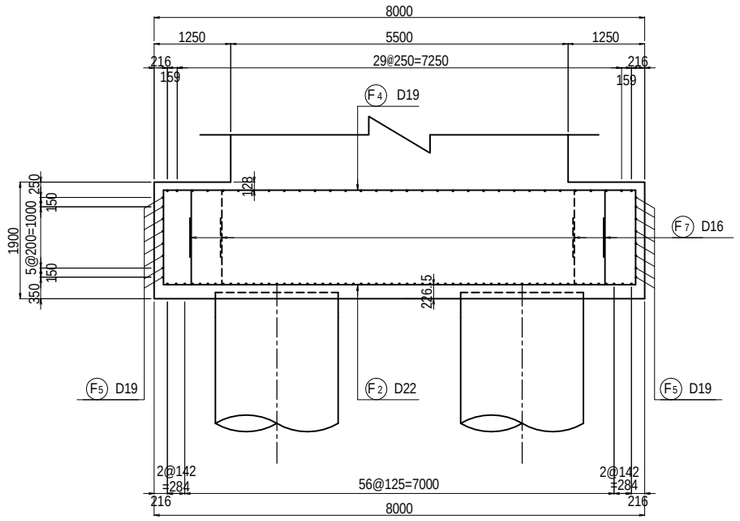


## 2 - 2

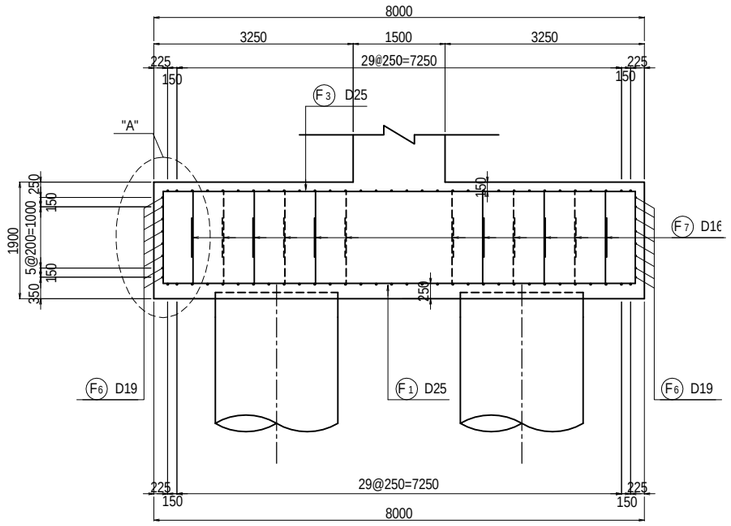


## DETAIL "A" S=1:40

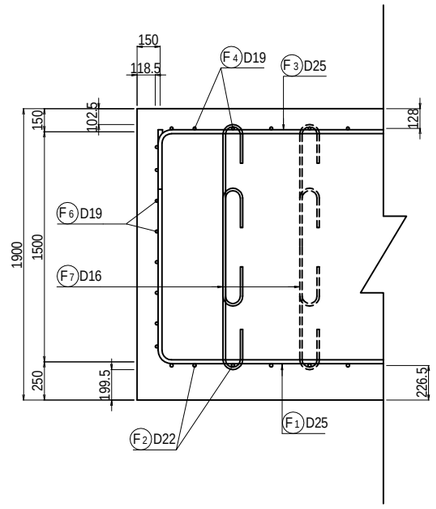


## 3 - 3 4 - 4

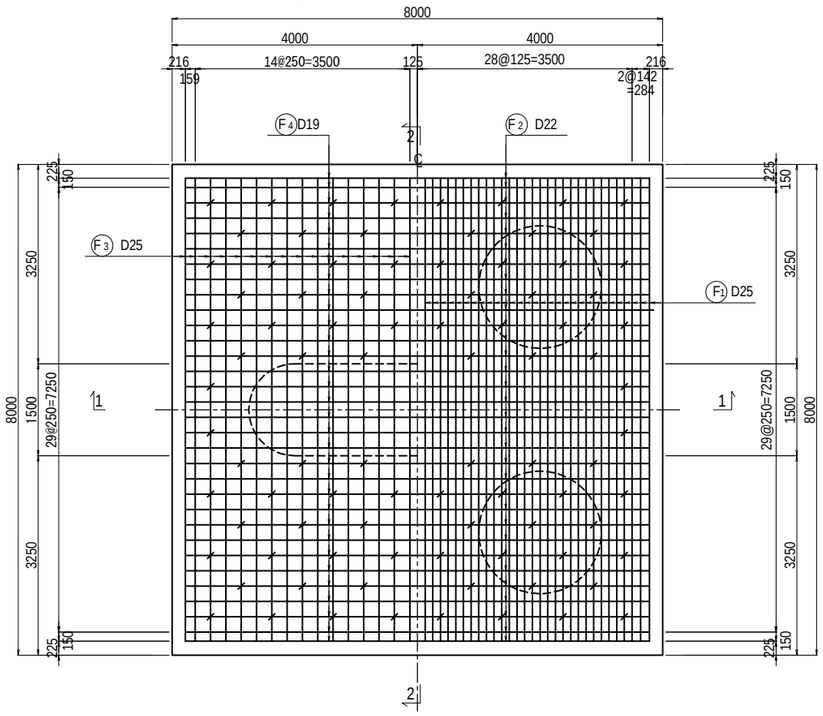


TRANSVERSAL

## KEY PLAN

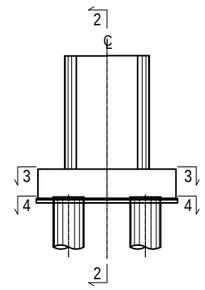

| PROJECT NAME | FINANCED BY | COUNTERPART | JICA STUDY TEAM |
|---|---|---|---|
| DETAILED DESIGN ON BAGO RIVER BRIDGE CONSTRUCTION PROJECT | JAPAN INTERNATIONAL COOPERATION AGENCY | REPUBLIC OF THE UNION OF MYANMAR MINISTRY OF CONSTRUCTION DEPARTMENT OF BRIDGE | NIPPON KOEI CO., LTD. ORIENTAL CONSULTANTS GLOBAL CO., LTD. METROPOLITAN EXPRESSWAY COMPANY LIMITED CHODAI CO.,LTD. NIPPON ENGINEERING CONSULTANTS CO.,LTD. |

| | NAME | SIGNATURE | DATE |
|---|---|---|---|
| PREPARED BY | M. OHYAMA | 大山満弘 | 15 Jun.2017 |
| CHECKED BY | T. HAYAKAWA | 平川知邦 | 20 Jun.2017 |
| APPROVED BY | Y. SANO | 佐野裕一 | 21 Jun.2017 |

DRAWING TITLE: BAR ARRANGEMENT OF PO3 PIER (3)

PACKAGE: 1

DWG No.: P1-OR-2133

# BAR ARRANGEMENT OF PO3 PIER (4)

## BAR QUANTITY

| SYMBOL | SHAPE | DIAMETER | NUMBER (NOS) | LENGTH (mm) | a (mm) | b (mm) | c (mm) | d (mm) | e (mm) | f (mm) | g (mm) | h (mm) | i (mm) | R1 (mm) | R2 (mm) | WEIGHT (kg) | REMARKS |
|---|---|---|---|---|---|---|---|---|---|---|---|---|---|---|---|---|---|
| B1 | D | D25 | 33 | 2860 | ***1272*** | 790 | 790 | | | | | | | | | 376 | ***AVERAGE*** |
| B2 | D | D16 | 10 | 6080 | ***5053*** | 510 | 510 | | | | | | | | | 95 | ***AVERAGE*** |
| B3 | E | D16 | 4 | 7360 | 1423 | 240 | 2025 | 3423 | 240 | | | | | 645 | | 46 | |
| B4 | I | D16 | 62 | 1570 | 1006 | 151 | 151 | 128 | 128 | | | | | 48 | 48 | 152 | |
| | | | | | | | | | | | | | | | | | |
| S1 | D | D16 | 20 | 1640 | 540 | 550 | 550 | | | | | | | | | 51 | |
| S2 | D | D16 | 14 | 1980 | 880 | 550 | 550 | | | | | | | | | 43 | |
| S3 | D | D16 | 20 | 1680 | 540 | 570 | 570 | | | | | | | | | 52 | |
| S4 | D | D16 | 14 | 2020 | 880 | 570 | 570 | | | | | | | | | 44 | |
| S5 | S | D16 | 4 | 3470 | 572 | 556 | 376 | 960 | 517 | 240 | 240 | | | 666 | | 22 | |
| | | | | | | | | | | | | | | | | | |
| C1 | B | D32 | 92 | 9510 | ***8900*** | 605 | | | | | | | | | | 5451 | ***AVERAGE*** |
| C2 | E | D16 | 114 | 7290 | 3423 | 240 | 1960 | 1423 | 240 | | | | | 624 | | 1296 | |
| C3 | I | D16 | 490 | 1470 | 912 | 151 | 151 | 128 | 128 | | | | | 48 | 48 | 1122 | |
| C4 | I | D16 | 98 | 3470 | 2912 | 151 | 151 | 128 | 128 | | | | | 48 | 48 | 530 | |
| | | | | | | | | | | | | | | | | | |
| F1 | D | D25 | 61 | 10700 | 7700 | 1500 | 1500 | | | | | | | | | 2598 | |
| F2 | D | D22 | 32 | 10800 | 7700 | 1546 | 1546 | | | | | | | | | 1051 | |
| F3 | D | D25 | 32 | 8450 | 7700 | 375 | 375 | | | | | | | | | 1076 | |
| F4 | D | D19 | 32 | 8270 | 7700 | 285 | 285 | | | | | | | | | 596 | |
| F5 | A | D19 | 16 | 7750 | 7744 | | | | | | | | | | | 279 | |
| F6 | A | D19 | 16 | 7750 | 7741 | | | | | | | | | | | 279 | |
| F7 | I | D16 | 176 | 1630 | 1063 | 151 | 151 | 128 | 128 | | | | | 48 | 48 | 447 | |
| | | | | | | | | | | | | | | | | | |

## SUMMARY

| DIAMETER | WEIGHT (kg) | MECHANICAL SPLIOE (NOS) |
|---|---|---|
| D13 | 0 | 0 |
| D16 | 3900 | 0 |
| D19 | 1154 | 0 |
| D22 | 1051 | 0 |
| D25 | 4050 | 0 |
| D29 | 0 | 0 |
| D32 | 5451 | 0 |
| D35 | 0 | 0 |
| D38 | 0 | 0 |
| D41 | 0 | 0 |
| D51 | 0 | 0 |
| TOTAL | 15606 | 0 |

## SHAPE CODE

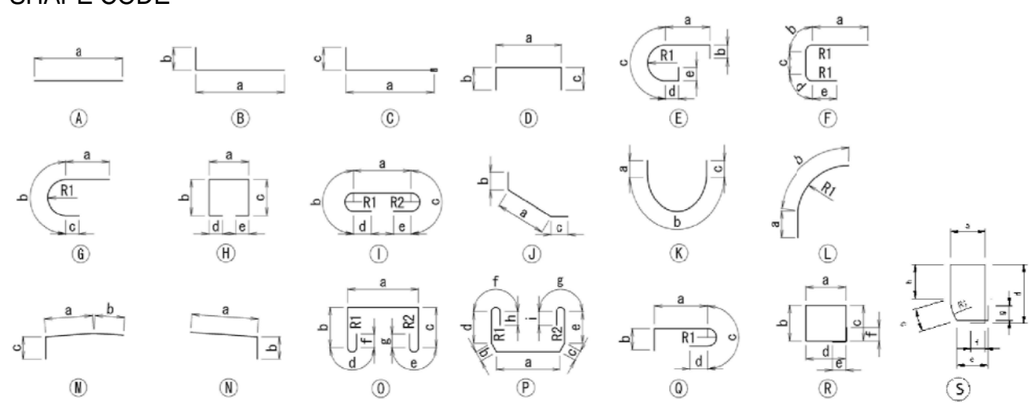


NOTES: 1. Unless otherwise specified in the Contract Documents, a grade of rebar shall be SD 345 or equivalent.

2. A figure in italic font indicate average length of rebar.

| PROJECT NAME | FINANCED BY | COUNTERPART | JICA STUDY TEAM |
|---|---|---|---|
| DETAILED DESIGN ON BAGO RIVER BRIDGE CONSTRUCTION PROJECT | JAPAN INTERNATIONAL COOPERATION AGENCY | REPUBLIC OF THE UNION OF MYANMAR MINISTRY OF CONSTRUCTION DEPARTMENT OF BRIDGE | NIPPON KOEI CO., LTD. ORIENTAL CONSULTANTS GLOBAL CO., LTD. METROPOLITAN EXPRESSWAY COMPANY LIMITED CHODAI CO.,LTD. NIPPON ENGINEERING CONSULTANTS CO.,LTD. |

| | NAME | SIGNATURE | DATE |
|---|---|---|---|
| PREPARED BY | M. OHYAMA | 大山満弘 | 15 Jun.2017 |
| CHECKED BY | T. HAYAKAWA | 早川和男 | 20 Jun.2017 |
| APPROVED BY | Y. SANO | 佐野雅一 | 21 Jun.2017 |

| DRAWING TITLE | PACKAGE |
|---|---|
| BAR ARRANGEMENT OF PO3 PIER (4) | 1 |
| | DWG No. |
| | P1-OR-2134 |

# BAR ARRANGEMENT OF CAST IN PLACE PILE FOR AO1 (1) S =1:100

## SEGMENT 1

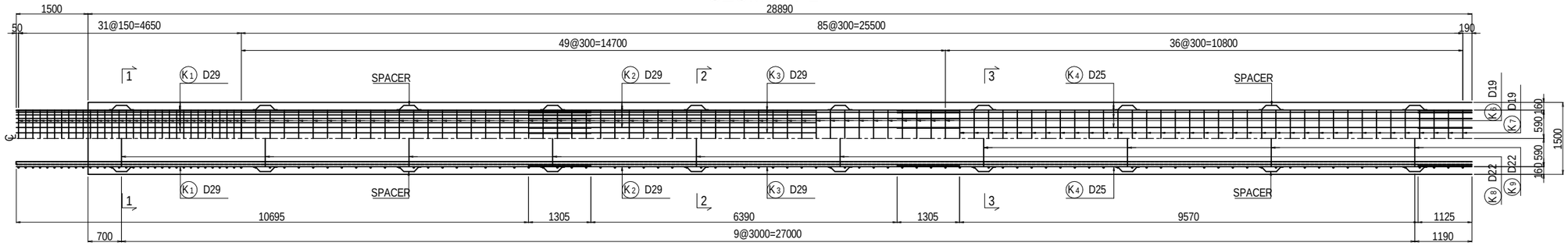


## SEGMENT 2

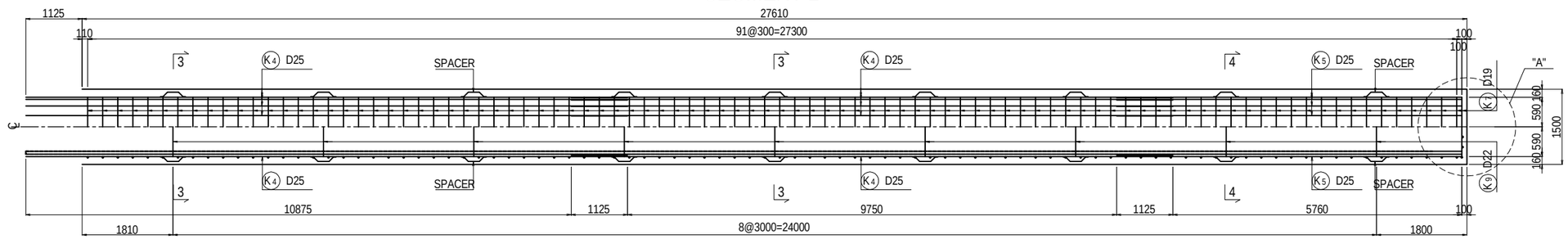


## SECTION 1-1 S=1:40

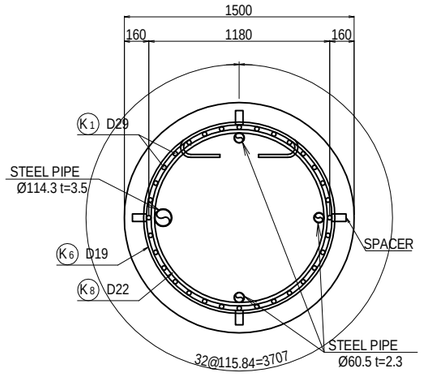


## SECTION 2-2 S=1:40

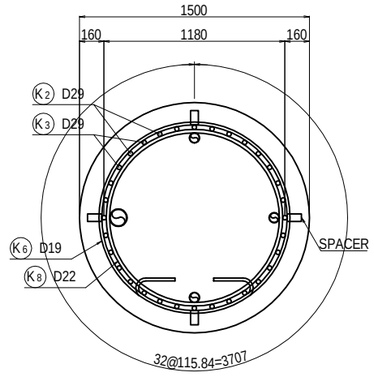


## SECTION 3-3 S=1:40

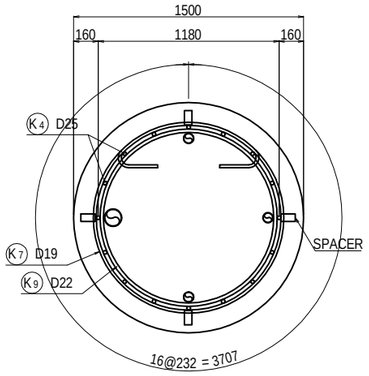


## SECTION 4-4 S=1:40

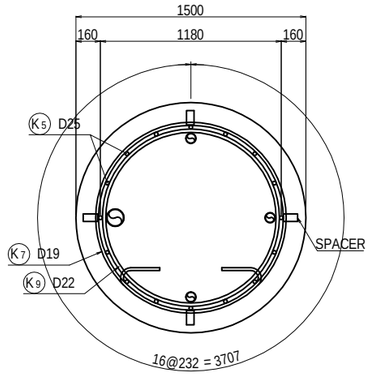


## DETAIL OF PILE TOE S=1:40

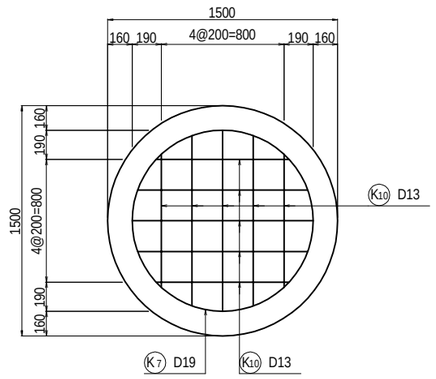


## DETAIL OF SPACER S=1:40

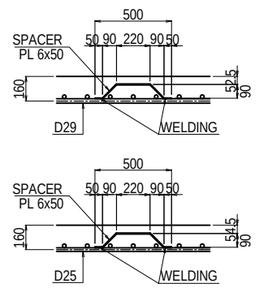


## DETAIL "A" S=1:40

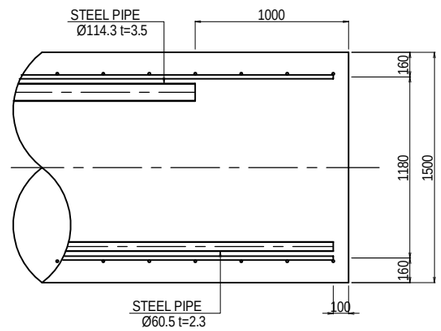


| PROJECT NAME | FINANCED BY | COUNTERPART | JICA STUDY TEAM |
|---|---|---|---|
| DETAILED DESIGN ON BAGO RIVER BRIDGE CONSTRUCTION PROJECT | JAPAN INTERNATIONAL COOPERATION AGENCY | REPUBLIC OF THE UNION OF MYANMAR MINISTRY OF CONSTRUCTION DEPARTMENT OF BRIDGE | NIPPON KOEI CO., LTD. ORIENTAL CONSULTANTS GLOBAL CO., LTD. METROPOLITAN EXPRESSWAY COMPANY LIMITED CHODAI CO.,LTD. NIPPON ENGINEERING CONSULTANTS CO.,LTD. |

| | NAME | SIGNATURE | DATE | DRAWING TITLE | PACKAGE |
|---|---|---|---|---|---|
| PREPARED BY | M. OHYAMA | 大山満弘 | 15 Jun.2017 | BAR ARRANGEMENT OF CAST IN PLACE PILE FOR AO1(1) | 1 |
| CHECKED BY | T. HAYAKAWA | 早川知邦 | 20 Jun.2017 | | DWG No. |
| APPROVED BY | Y. SANO | 佐野雄一 | 21 Jun.2017 | | P1-OR-2201 |

# BAR ARRANGEMENT OF CAST IN PLACE PILE FOR AO1 (2)

## BAR QUANTITY

| SYMBOL | SHAPE | DIAMETER | NUMBER (NOS) | LENGTH (mm) | a (mm) | b (mm) | c (mm) | d (mm) | e (mm) | f (mm) | R1 (mm) | R2 (mm) | WEIGHT (kg) | REMARKS |
|---|---|---|---|---|---|---|---|---|---|---|---|---|---|---|
| K1 | A | D29 | 32 | 12000 | 12000 | | | | | | | | 1935 | |
| K2 | A | D29 | 16 | 9000 | 9000 | | | | | | | | 726 | |
| K3 | A | D29 | 16 | 6000 | 6000 | | | | | | | | 484 | |
| K4 | A | D25 | 48 | 12000 | 12000 | | | | | | | | 2292 | |
| K5 | A | D25 | 16 | 6890 | 6885 | | | | | | | | 439 | |
| K6 | B | D19 | 81 | 5270 | 3858 | 760 | 134 | 134 | 190 | 190 | 614 | | 961 | |
| K7 | B | D19 | 129 | 5260 | 3845 | 760 | 134 | 134 | 190 | 190 | 614 | | 1527 | |
| K8 | C | D22 | 6 | 4310 | 3547 | 760 | | | | | 564.5 | | 79 | |
| K9 | C | D22 | 13 | 4320 | 3559 | 760 | | | | | 566.5 | | 171 | |
| K10 | D | D13 | 10 | 1440 | ***1050*** | 195 | 195 | | | | | | 14 | ***AVERAGE*** |
| K11 | E | PL | 76 | 580 | 50 | 127 | 220 | 127 | 50 | | | | 104 | |

REBAR QUANTITY (1NOS)

| DIAMETER | WEIGHT |
|---|---|
| D13 | 14 kg |
| D16 | 0 kg |
| D19 | 2488 kg |
| D22 | 250 kg |
| D25 | 2731 kg |
| D29 | 3145 kg |
| D32 | 0 kg |
| D35 | 0 kg |
| D38 | 0 kg |
| D41 | 0 kg |
| D51 | 0 kg |
| PL | 104 kg |
| TOTAL | 8732 kg |

## SHAPE CODE

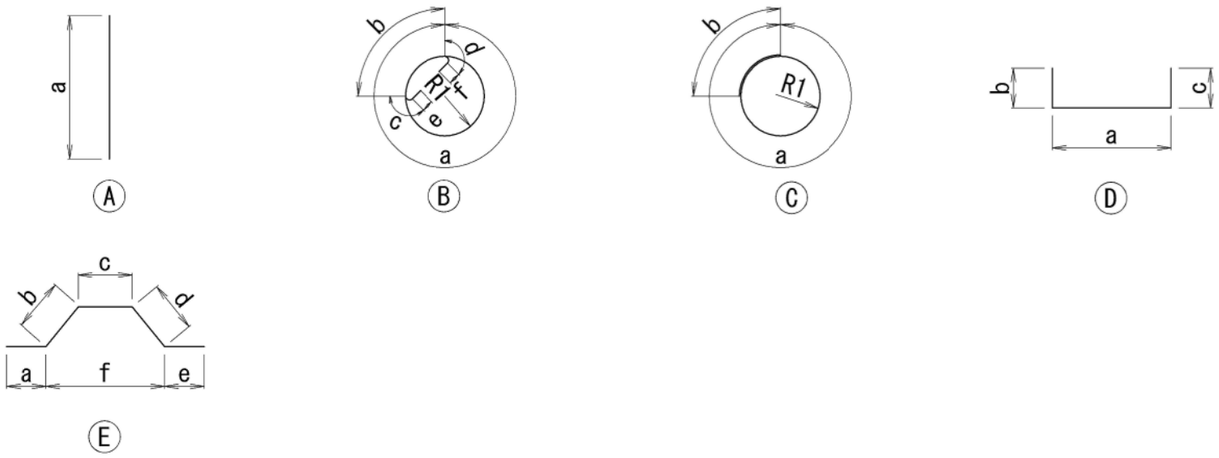


NOTES: 1. Unless otherwise specified in the Contract Documents, a grade of rebar shall be SD 345 or equivalent.

2. A figure in italic font indicate average length of rebar.

| PROJECT NAME | FINANCED BY | COUNTERPART | JICA STUDY TEAM | | NAME | SIGNATURE | DATE | DRAWING TITLE | PACKAGE |
|---|---|---|---|---|---|---|---|---|---|
| DETAILED DESIGN ON BAGO RIVER BRIDGE CONSTRUCTION PROJECT | JAPAN INTERNATIONAL COOPERATION AGENCY | REPUBLIC OF THE UNION OF MYANMAR MINISTRY OF CONSTRUCTION DEPARTMENT OF BRIDGE | NIPPON KOEI CO., LTD. ORIENTAL CONSULTANTS GLOBAL CO., LTD. METROPOLITAN EXPRESSWAY COMPANY LIMITED CHODAI CO.,LTD. NIPPON ENGINEERING CONSULTANTS CO.,LTD. | PREPARED BY | M. OHYAMA | 大山満弘 | 15 Jun.2017 | BAR ARRANGEMENT OF CAST IN PLACE PILE FOR AO1(2) | 1 |
| | | | | CHECKED BY | T. HAYAKAWA | 早川和邦 | 20 Jun.2017 | | DWG No. |
| | | | | APPROVED BY | Y. SANO | 佐野佳一 | 21 Jun.2017 | | P1-OR-2202 |

# BAR ARRANGEMENT OF CAST IN PLACE PILE FOR PO1 PIER(1) S =1:100

## SEGMENT 1

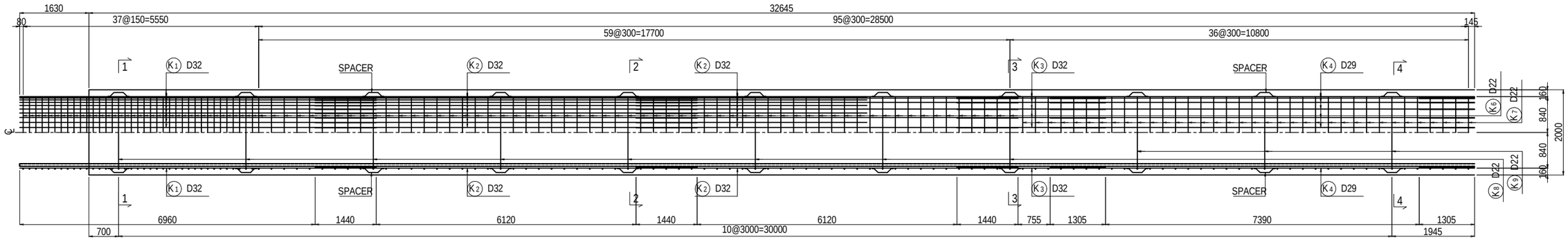


## SEGMENT 2

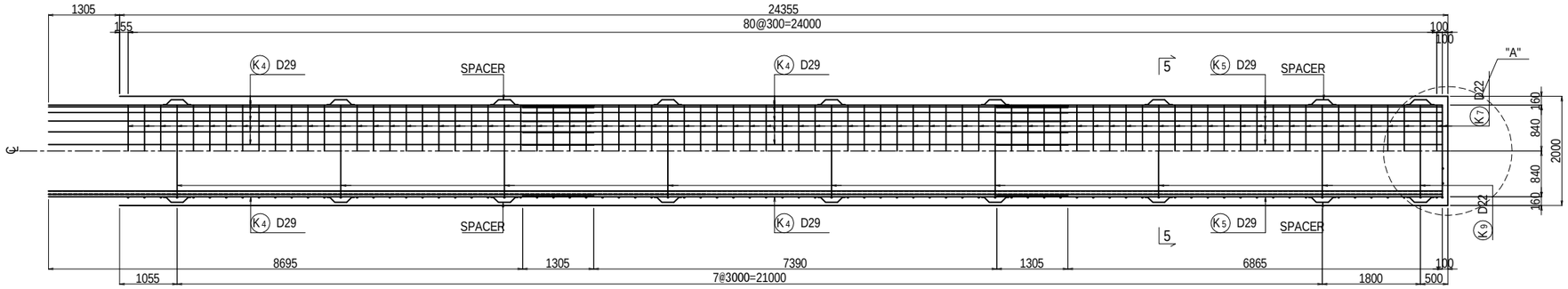


## SECTION 1-1 S=1:40

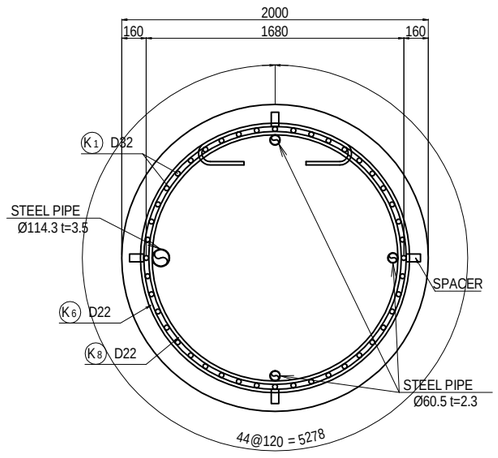


## SECTION 2-2 S=1:40

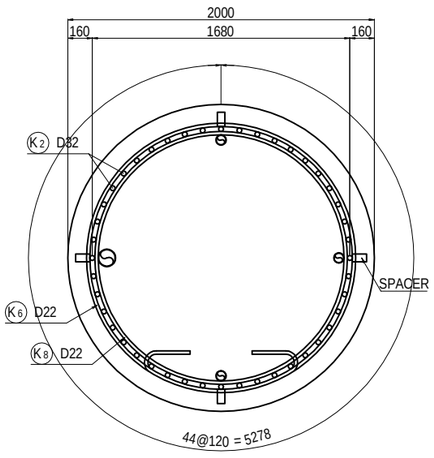


## SECTION 3-3 S=1:40

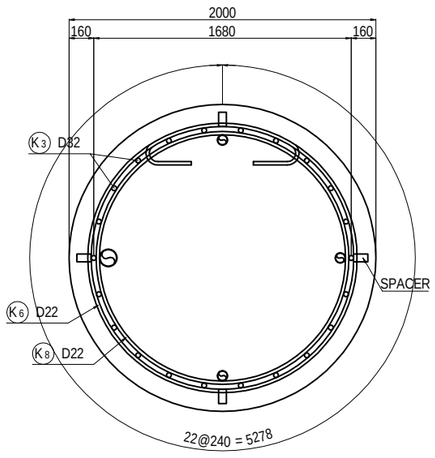


## SECTION 4-4 S=1:40

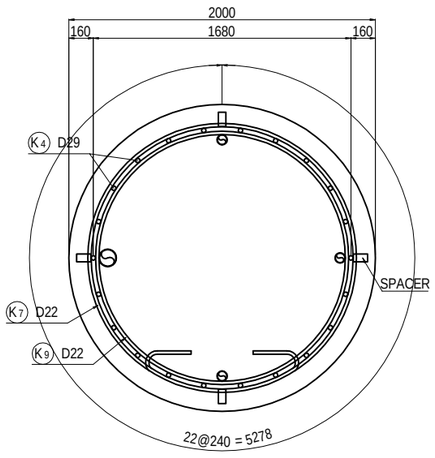


## SECTION 5-5 S=1:40

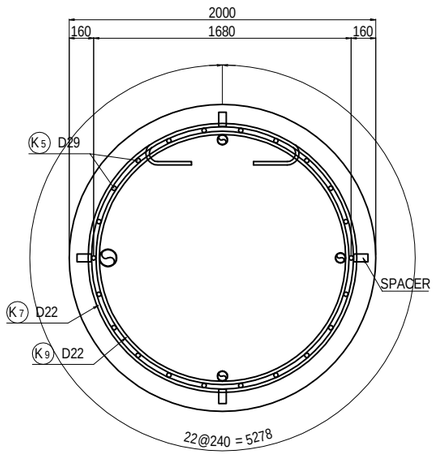


| PROJECT NAME | FINANCED BY | COUNTERPART | JICA STUDY TEAM |
|---|---|---|---|
| DETAILED DESIGN ON BAGO RIVER BRIDGE CONSTRUCTION PROJECT | JAPAN INTERNATIONAL COOPERATION AGENCY | REPUBLIC OF THE UNION OF MYANMAR MINISTRY OF CONSTRUCTION DEPARTMENT OF BRIDGE | NIPPON KOEI CO., LTD. ORIENTAL CONSULTANTS GLOBAL CO., LTD. METROPOLITAN EXPRESSWAY COMPANY LIMITED CHODAI CO.,LTD. NIPPON ENGINEERING CONSULTANTS CO.,LTD. |

| | NAME | SIGNATURE | DATE | DRAWING TITLE | PACKAGE |
|---|---|---|---|---|---|
| PREPARED BY | M. OHYAMA | 大山 満弘 | 15 Jun.2017 | BAR ARRANGEMENT OF CAST IN PLACE PILE FOR PO1 PIER(1) | 1 |
| CHECKED BY | T. HAYAKAWA | 早川 知巧 | 20 Jun.2017 | | DWG No. |
| APPROVED BY | Y. SANO | 佐野 雄一 | 21 Jun.2017 | | P1-OR-2211 |

# BAR ARRANGEMENT OF CAST IN PLACE PILE FOR PO1 PIER(2) S =1:100

## DETAIL OF PILE TOE S=1:40

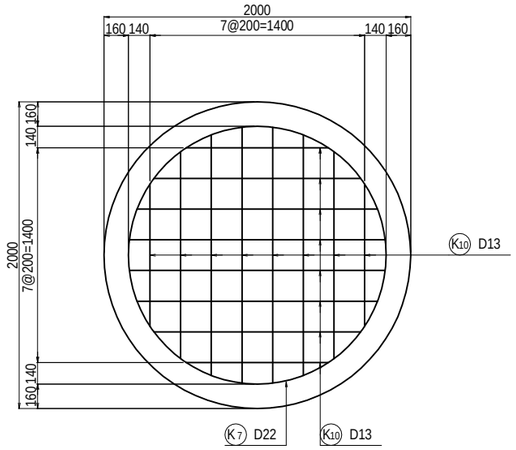


## DETAIL OF SPACER S=1:40

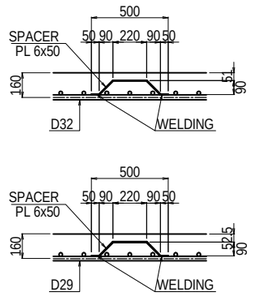


## DETAIL "A" S=1:40

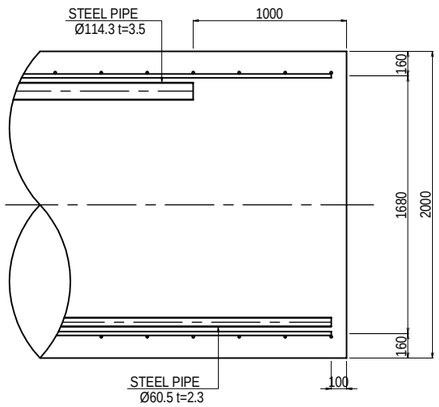


## BAR QUANTITY

| SYMBOL | SHAPE | DIAMETER | NUMBER (NOS) | LENGTH (mm) | a (mm) | b (mm) | c (mm) | d (mm) | e (mm) | f (mm) | R1 (mm) | R2 (mm) | WEIGHT (kg) | REMARKS |
|---|---|---|---|---|---|---|---|---|---|---|---|---|---|---|
| K1 | A | D32 | 44 | 8400 | 8400 | | | | | | | | 2303 | |
| K2 | A | D32 | 88 | 9000 | 9000 | | | | | | | | 4934 | |
| K3 | A | D32 | 22 | 3500 | 3500 | | | | | | | | 480 | |
| K4 | A | D29 | 66 | 10000 | 10000 | | | | | | | | 3326 | |
| K5 | A | D29 | 22 | 8170 | 8170 | | | | | | | | 906 | |
| K6 | B | D22 | 97 | 7190 | 5448 | 990 | 156 | 156 | 220 | 220 | 867 | | 2120 | |
| K7 | B | D22 | 118 | 7180 | 5438 | 990 | 156 | 156 | 220 | 220 | 865.5 | | 2576 | |
| K8 | C | D22 | 8 | 6100 | 5108 | 990 | | | | | 813 | | 148 | |
| K9 | C | D22 | 12 | 6110 | 5118 | 990 | | | | | 814.5 | | 223 | |
| K10 | D | D13 | 16 | 1770 | ***1380*** | 195 | 195 | | | | | | 28 | ***AVERAGE*** |
| K11 | E | PL | 76 | 580 | 50 | 127 | 220 | 127 | 50 | | | | 104 | |

REBAR QUANTITY (1NOS)

| DIAMETER | WEIGHT |
|---|---|
| D13 | 28 kg |
| D16 | 0 kg |
| D19 | 0 kg |
| D22 | 5067 kg |
| D25 | 0 kg |
| D29 | 4232 kg |
| D32 | 7717 kg |
| D35 | 0 kg |
| D38 | 0 kg |
| D41 | 0 kg |
| D51 | 0 kg |
| PL | 104 kg |
| TOTAL | 17148 kg |

## SHAPE CODE

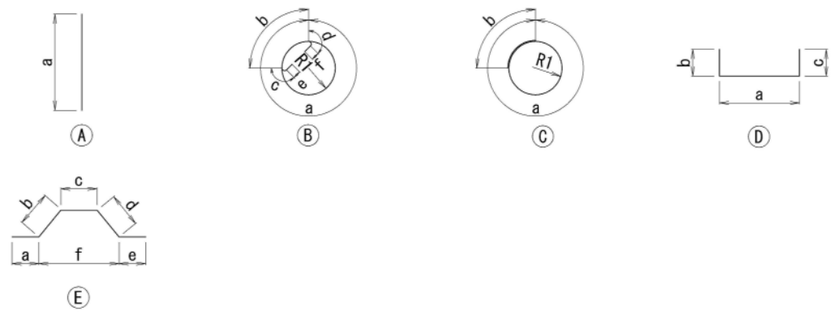


NOTES: 1. Unless otherwise specified in the Contract Documents, a grade of rebar shall be SD 345 or equivalent.

2. A figure in italic font indicate average length of rebar.

| PROJECT NAME | FINANCED BY | COUNTERPART | JICA STUDY TEAM |
|---|---|---|---|
| DETAILED DESIGN ON BAGO RIVER BRIDGE CONSTRUCTION PROJECT | JAPAN INTERNATIONAL COOPERATION AGENCY | REPUBLIC OF THE UNION OF MYANMAR MINISTRY OF CONSTRUCTION DEPARTMENT OF BRIDGE | NIPPON KOEI CO., LTD. ORIENTAL CONSULTANTS GLOBAL CO., LTD. METROPOLITAN EXPRESSWAY COMPANY LIMITED CHODAI CO.,LTD. NIPPON ENGINEERING CONSULTANTS CO.,LTD. |

| | NAME | SIGNATURE | DATE | DRAWING TITLE | PACKAGE |
|---|---|---|---|---|---|
| PREPARED BY | M. OHYAMA | 大山満弘 | 15 Jun.2017 | BAR ARRANGEMENT OF CAST IN PLACE PILE FOR PO1 PIER(2) | 1 |
| CHECKED BY | T. HAYAKAWA | 早川知邦 | 20 Jun.2017 | | DWG No. |
| APPROVED BY | Y. SANO | 佐野雅一 | 21 Jun.2017 | | P1-OR-2212 |

# BAR ARRANGEMENT OF CAST IN PLACE PILE FOR PO2 PIER(1) S =1:100

## SEGMENT 1

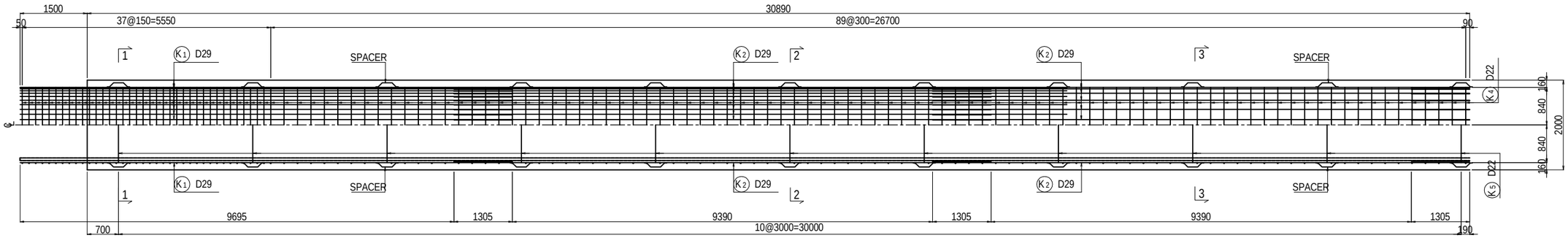


## SEGMENT 2

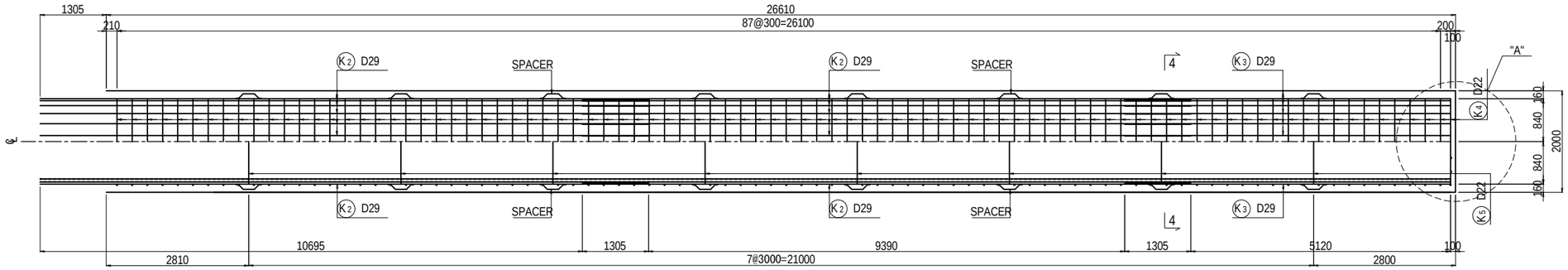


## SECTION 1-1 S=1:40

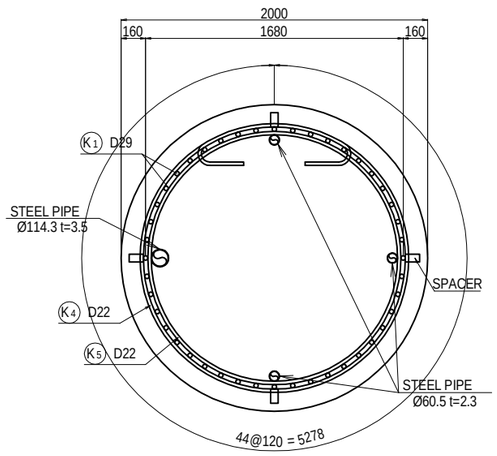


## SECTION 2-2 S=1:40

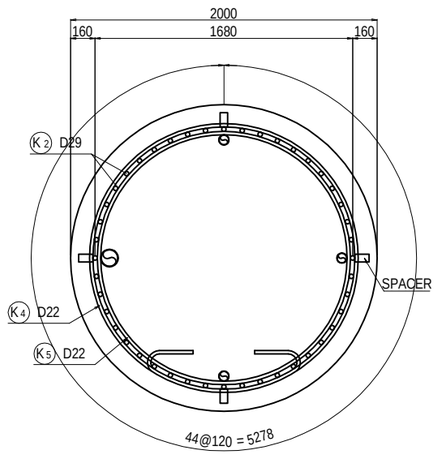


## SECTION 3-3 S=1:40

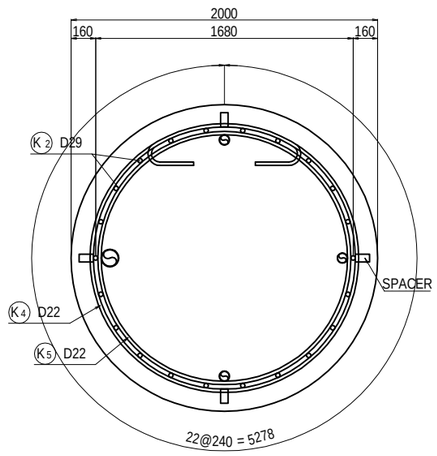


## SECTION 4-4 S=1:40

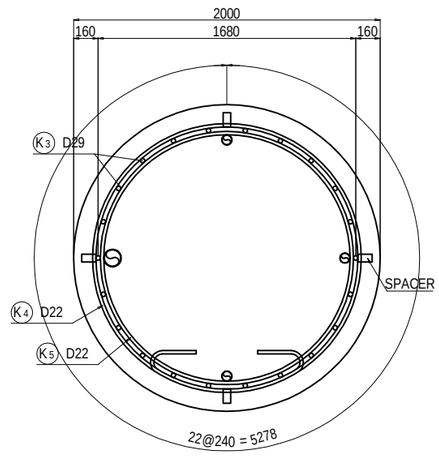


| PROJECT NAME | FINANCED BY | COUNTERPART | JICA STUDY TEAM |
|---|---|---|---|
| DETAILED DESIGN ON BAGO RIVER BRIDGE CONSTRUCTION PROJECT | JAPAN INTERNATIONAL COOPERATION AGENCY | REPUBLIC OF THE UNION OF MYANMAR MINISTRY OF CONSTRUCTION DEPARTMENT OF BRIDGE | NIPPON KOEI CO., LTD. ORIENTAL CONSULTANTS GLOBAL CO., LTD. METROPOLITAN EXPRESSWAY COMPANY LIMITED CHODAI CO.,LTD. NIPPON ENGINEERING CONSULTANTS CO.,LTD. |

| | NAME | SIGNATURE | DATE |
|---|---|---|---|
| PREPARED BY | M. OHYAMA | 大山 満弘 | 15 Jun.2017 |
| CHECKED BY | T. HAYAKAWA | 早川 知子 | 20 Jun.2017 |
| APPROVED BY | Y. SANO | 佐野 雅一 | 21 Jun.2017 |

| DRAWING TITLE | PACKAGE |
|---|---|
| BAR ARRANGEMENT OF CAST IN PLACE PILE FOR PO2 PIER(1) | 1 |
| | DWG No. |
| | P1-OR-2221 |

# BAR ARRANGEMENT OF CAST IN PLACE PILE FOR PO2 PIER(2) S =1:100

## DETAIL OF PILE TOE S=1:40

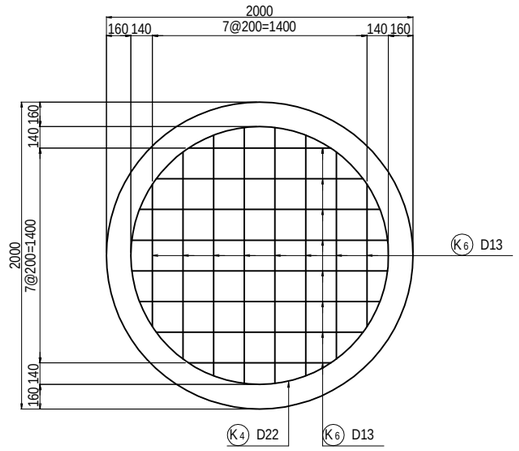


## DETAIL OF SPACER S=1:40

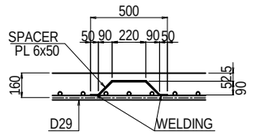


## DETAIL "A" S=1:40

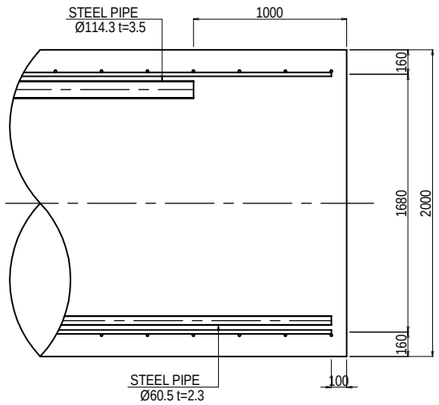


## BAR QUANTITY

| SYMBOL | SHAPE | DIAMETER | NUMBER (NOS) | LENGTH (mm) | a (mm) | b (mm) | c (mm) | d (mm) | e (mm) | f (mm) | R1 (mm) | R2 (mm) | WEIGHT (kg) | REMARKS |
|---|---|---|---|---|---|---|---|---|---|---|---|---|---|---|
| K1 | A | D29 | 44 | 11000 | 11000 | | | | | | | | 2439 | |
| K2 | A | D29 | 110 | 12000 | 12000 | | | | | | | | 6653 | |
| K3 | A | D29 | 22 | 6430 | 6425 | | | | | | | | 713 | |
| K4 | B | D22 | 216 | 7180 | 5438 | 990 | 156 | 156 | 220 | 220 | 865.5 | | 4715 | |
| K5 | C | D22 | 19 | 6110 | 5118 | 990 | | | | | 814.5 | | 353 | |
| K6 | D | D13 | 16 | 1770 | ***1380*** | 195 | 195 | | | | | | 28 | ***AVERAGE*** |
| K7 | E | PL | 76 | 580 | 50 | 127 | 220 | 127 | 50 | | | | 104 | |
| | | | | 0 | | | | | | | | | 0 | |
| | | | | 0 | | | | | | | | | 0 | |
| | | | | 0 | | | | | | | | | 0 | |
| | | | | 0 | | | | | | | | | 0 | |

REBAR QUANTITY (1NOS)

| DIAMETER | WEIGHT |
|---|---|
| D13 | 28 kg |
| D16 | 0 kg |
| D19 | 0 kg |
| D22 | 5068 kg |
| D25 | 0 kg |
| D29 | 9805 kg |
| D32 | 0 kg |
| D35 | 0 kg |
| D38 | 0 kg |
| D41 | 0 kg |
| D51 | 0 kg |
| PL | 104 kg |
| TOTAL | 15005 kg |

## SHAPE CODE

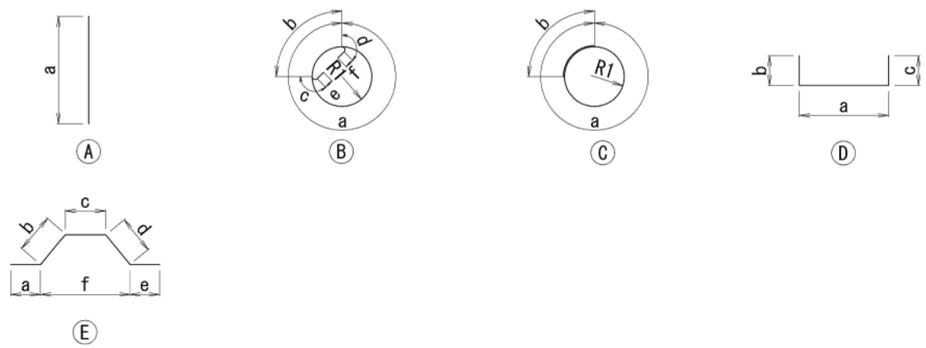


NOTES: 1. Unless otherwise specified in the Contract Documents, a grade of rebar shall be SD 345 or equivalent.

2. A figure in italic font indicate average length of rebar.

| PROJECT NAME | FINANCED BY | COUNTERPART | JICA STUDY TEAM |
|---|---|---|---|
| DETAILED DESIGN ON BAGO RIVER BRIDGE CONSTRUCTION PROJECT | JAPAN INTERNATIONAL COOPERATION AGENCY | REPUBLIC OF THE UNION OF MYANMAR MINISTRY OF CONSTRUCTION DEPARTMENT OF BRIDGE | NIPPON KOEI CO., LTD. ORIENTAL CONSULTANTS GLOBAL CO., LTD. METROPOLITAN EXPRESSWAY COMPANY LIMITED CHODAI CO.,LTD. NIPPON ENGINEERING CONSULTANTS CO.,LTD. |

| | NAME | SIGNATURE | DATE |
|---|---|---|---|
| PREPARED BY | M. OHYAMA | 大山満弘 | 15 Jun.2017 |
| CHECKED BY | T. HAYAKAWA | 早川和邦 | 20 Jun.2017 |
| APPROVED BY | Y. SANO | 佐野雅一 | 21 Jun.2017 |

DRAWING TITLE: BAR ARRANGEMENT OF CAST IN PLACE PILE FOR PO2 PIER(2)

PACKAGE: 1

DWG No.: P1-OR-2222

# BAR ARRANGEMENT OF CAST IN PLACE PILE FOR PO3 PIER(1) S =1:100

## SEGMENT 1

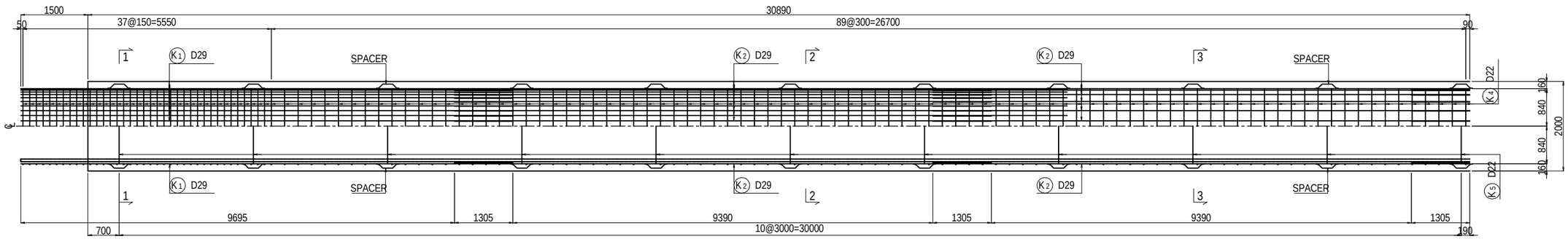


## SEGMENT 2

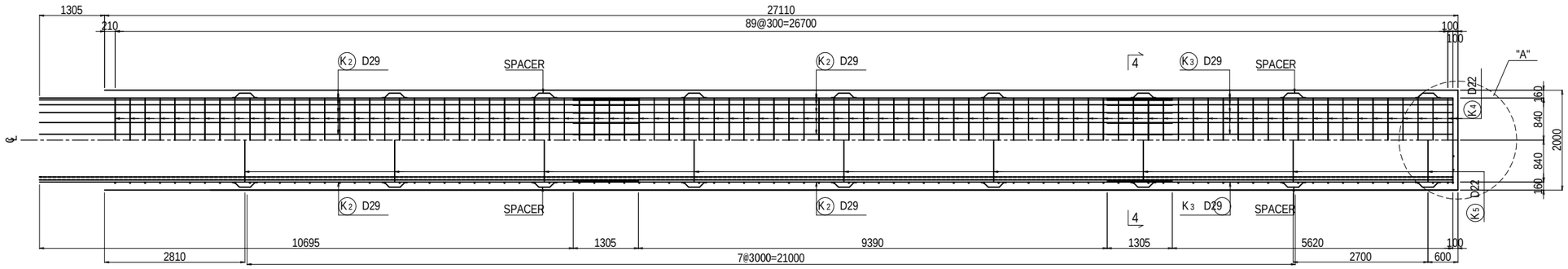


## SECTION 1-1 S=1:40

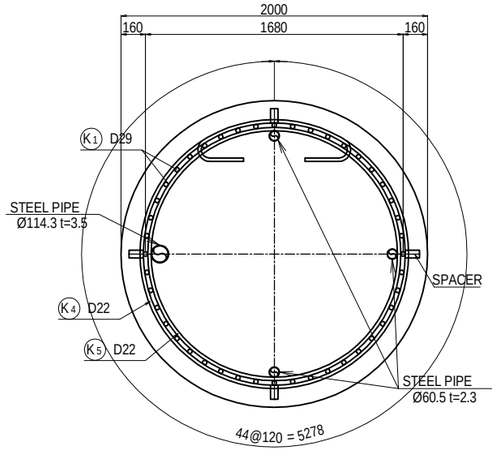


## SECTION 2-2 S=1:40

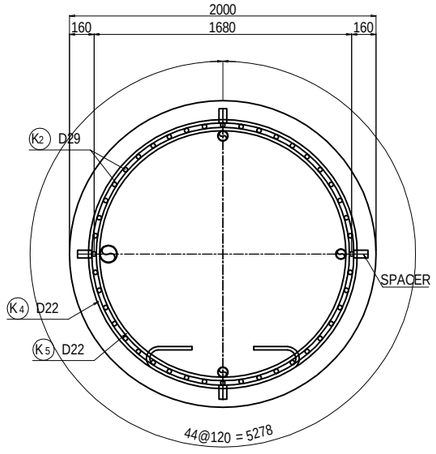


## SECTION 3-3 S=1:40

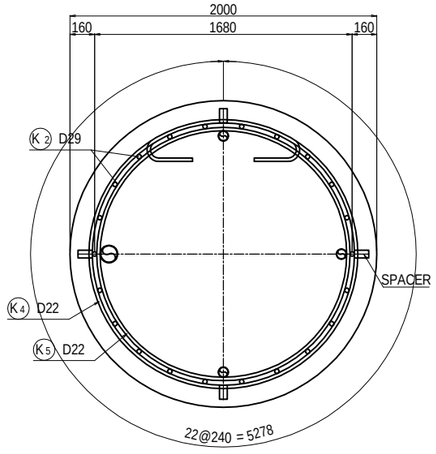


## SECTION 4-4 S=1:40

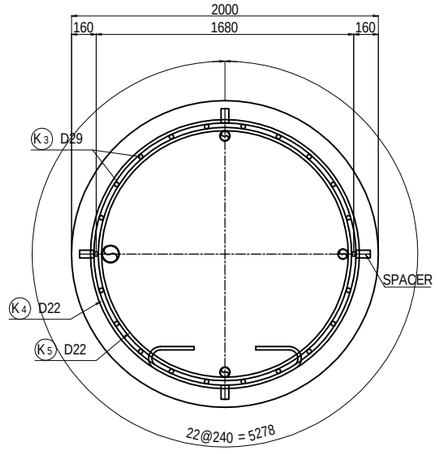


| PROJECT NAME | FINANCED BY | COUNTERPART | JICA STUDY TEAM |
|---|---|---|---|
| DETAILED DESIGN ON BAGO RIVER BRIDGE CONSTRUCTION PROJECT | JAPAN INTERNATIONAL COOPERATION AGENCY | REPUBLIC OF THE UNION OF MYANMAR MINISTRY OF CONSTRUCTION DEPARTMENT OF BRIDGE | NIPPON KOEI CO., LTD. ORIENTAL CONSULTANTS GLOBAL CO., LTD. METROPOLITAN EXPRESSWAY COMPANY LIMITED CHODAI CO.,LTD. NIPPON ENGINEERING CONSULTANTS CO.,LTD. |

| | NAME | SIGNATURE | DATE |
|---|---|---|---|
| PREPARED BY | M. OHYAMA | 大山満弘 | 15 Jun.2017 |
| CHECKED BY | T. HAYAKAWA | 早川知邦 | 20 Jun.2017 |
| APPROVED BY | Y. SANO | 佐野雅一 | 21 Jun.2017 |

DRAWING TITLE: BAR ARRANGEMENT OF CAST IN PLACE PILE FOR PO3 PIER(1)

PACKAGE: 1

DWG No.: P1-OR-2231

# BAR ARRANGEMENT OF CAST IN PLACE PILE FOR PO3 PIER(2) S =1:100

## DETAIL OF PILE TOE S=1:40

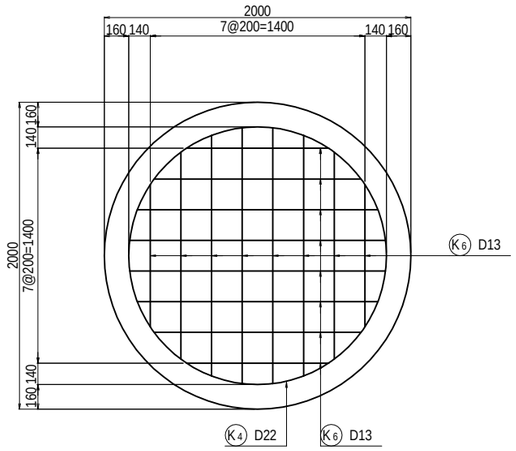


## DETAIL OF SPACER S=1:40

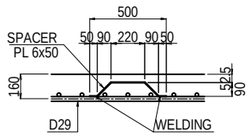


## DETAIL "A" S=1:40

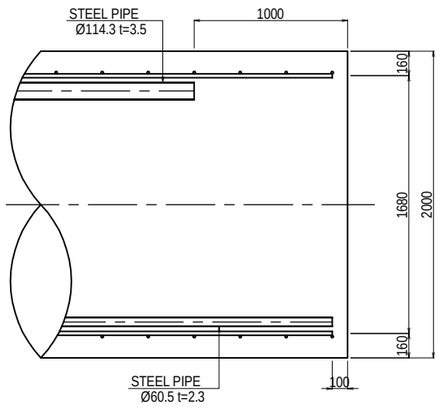


## BAR QUANTITY

| SYMBOL | SHAPE | DIAMETER | NUMBER (NOS) | LENGTH (mm) | a (mm) | b (mm) | c (mm) | d (mm) | e (mm) | f (mm) | R1 (mm) | R2 (mm) | WEIGHT (kg) | REMARKS |
|---|---|---|---|---|---|---|---|---|---|---|---|---|---|---|
| K1 | A | D29 | 44 | 11000 | 11000 | | | | | | | | 2439 | |
| K2 | A | D29 | 110 | 12000 | 12000 | | | | | | | | 6653 | |
| K3 | A | D29 | 22 | 6930 | 6925 | | | | | | | | 768 | |
| K4 | B | D22 | 218 | 7180 | 5438 | 990 | 156 | 156 | 220 | 220 | 865.5 | | 4759 | |
| K5 | C | D22 | 20 | 6110 | 5118 | 990 | | | | | 814.5 | | 371 | |
| K6 | D | D13 | 16 | 1770 | ***1380*** | 195 | 195 | | | | | | 28 | ***AVERAGE*** |
| K7 | E | PL | 80 | 580 | 50 | 127 | 220 | 127 | 50 | | | | 109 | |

| REBAR QUANTITY (1NOS) | |
|---|---|
| DIAMETER | WEIGHT |
| D13 | 28 kg |
| D16 | 0 kg |
| D19 | 0 kg |
| D22 | 5130 kg |
| D25 | 0 kg |
| D29 | 9860 kg |
| D32 | 0 kg |
| D35 | 0 kg |
| D38 | 0 kg |
| D41 | 0 kg |
| D51 | 0 kg |
| PL | 109 kg |
| TOTAL | 15127 kg |

## SHAPE CODE

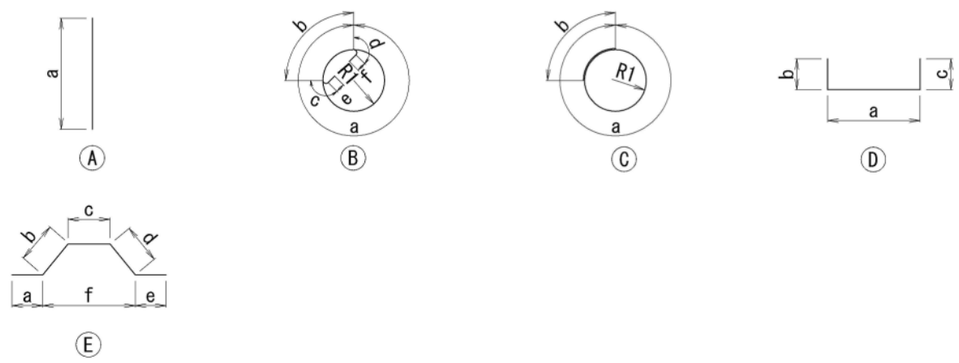


NOTES: 1. Unless otherwise specified in the Contract Documents, a grade of rebar shall be SD 345 or equivalent.

2. A figure in italic font indicate average length of rebar.

| PROJECT NAME | FINANCED BY | COUNTERPART | JICA STUDY TEAM |
|---|---|---|---|
| DETAILED DESIGN ON BAGO RIVER BRIDGE CONSTRUCTION PROJECT | JAPAN INTERNATIONAL COOPERATION AGENCY | REPUBLIC OF THE UNION OF MYANMAR MINISTRY OF CONSTRUCTION DEPARTMENT OF BRIDGE | NIPPON KOEI CO., LTD. ORIENTAL CONSULTANTS GLOBAL CO., LTD. METROPOLITAN EXPRESSWAY COMPANY LIMITED CHODAI CO.,LTD. NIPPON ENGINEERING CONSULTANTS CO.,LTD. |

| | NAME | SIGNATURE | DATE |
|---|---|---|---|
| PREPARED BY | M. OHYAMA | 大山満弘 | 15 Jun.2017 |
| CHECKED BY | T. HAYAKAWA | 平川知邦 | 20 Jun.2017 |
| APPROVED BY | Y. SANO | 佐野雅一 | 21 Jun.2017 |

| DRAWING TITLE | PACKAGE |
|---|---|
| BAR ARRANGEMENT OF CAST IN PLACE PILE FOR PO3 PIER(2) | 1 |
| | DWG No. |
| | P1-OR-2232 |

# DETAIL OF BEARINGS FOR ON-RAMP(1) S=1:20

## A01 RUBBER BEARING

PLAN VIEW

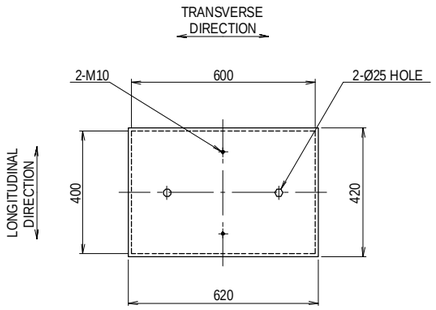


SIDE VIEW

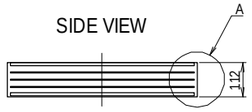


DETAIL OF A S=1:5

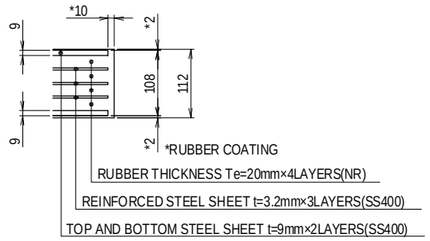


DESIGN CONDITION

| DESIGN REACTION | | |
|---|---|---|
| MAX/MIN REACTION | R | 1500 kN |
| REACTION DUE TO DEAD LOAD | Rd | 970 kN |
| **DEFORMATION** | | |
| SERVICE | ΔL | ± 42 mm |
| **RUBBER BEARING** | | |
| SHEAR COEFFICIENT | Ge | 1.0 N/mm² |

| A01 MATERIAL (PER 1 ABUTMENT) | | | | |
|---|---|---|---|---|
| ITEM | MATERIAL | Nos. | WEIGHT(kg) | NOTE |
| RUBBER BEARING | NR+SS400 | 2 | 155.8 | |
| GRID BARS | SD345 | - | 14.4 | |

## P01-P03 RUBBER BEARING

PLAN VIEW

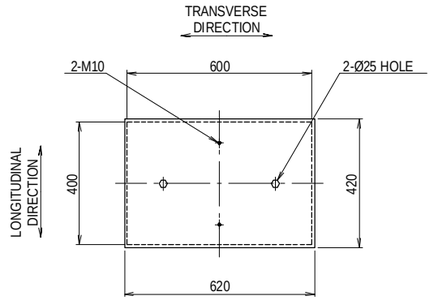


SIDE VIEW

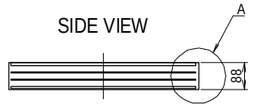


DETAIL OF A S=1:5

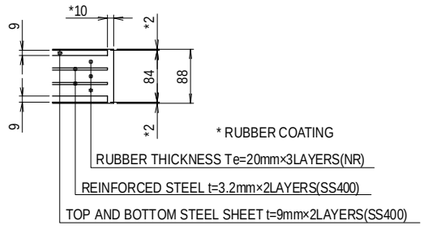


DESIGN CONDITION

| DESIGN REACTION | | |
|---|---|---|
| MAX/MIN REACTION | R | 1720 kN |
| REACTION DUE TO DEAD LOAD | Rd | 1090 kN |
| **RUBBER BEARING** | | |
| SHEAR EFFICIENT | Ge | 1.0 N/mm² |

| P01 - P03 MATERIAL (PER 1 PIER) | | | | |
|---|---|---|---|---|
| ITEM | MATERIAL | Nos. | WEIGHT(kg) | NOTE |
| RUBBER BEARING | NR+SS400 | 4 | 262.4 | |
| GRID BARS | SD345 | - | 28.7 | |

## P5 RUBBER BEARING

PLAN VIEW

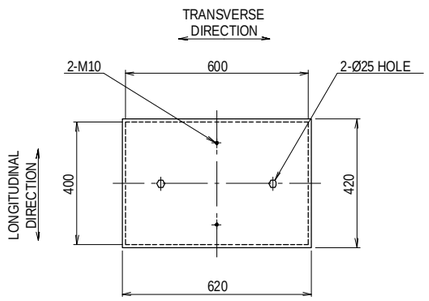


SIDE VIEW

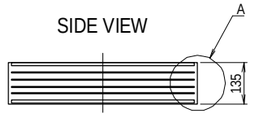


DETAIL OF A S=1:5

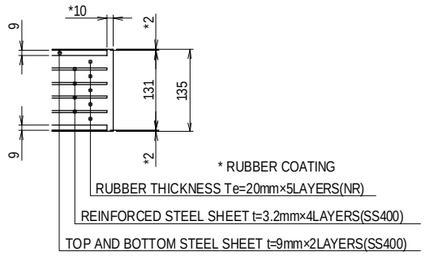


DESIGN CONDITION

| DESIGN REACTION | | |
|---|---|---|
| MAX/MIN REACTION | R | 1510 kN |
| REACTION DUE TO DEAD LOAD | Rd | 1010 kN |
| **DEFORMATION** | | |
| SERVICE | ΔL | ± 57 mm |
| **RUBBER BEARING** | | |
| SHEAR COEFFICIENT | Ge | 1.0 N/mm² |

| P5 MATERIAL (PER 1 PIER) | | | | |
|---|---|---|---|---|
| ITEM | MATERIAL | Nos. | WEIGHT(kg) | NOTE |
| RUBBER BEARING | NR+SS400 | 2 | 179.9 | |
| GRID BARS | SD345 | - | 14.4 | |

## PROFILE S=1:60

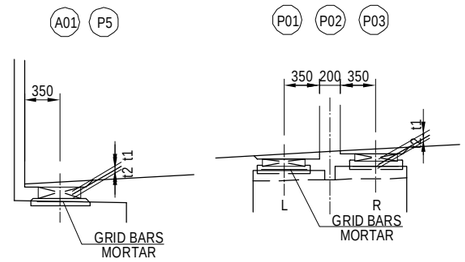


MORTAR THICKNESS (t1, t2) (mm)

| | | G1 | | G2 | |
|---|---|---|---|---|---|
| | | t1 | t2 | t1 | t2 |
| AO1 | | 34 | 36 | 34 | 36 |
| PO1 | L | 38 | 30 | 38 | 30 |
| | R | 49 | 30 | 49 | 30 |
| PO2 | L | 37 | 30 | 37 | 30 |
| | R | 44 | 30 | 44 | 30 |
| PO3 | L | 39 | 30 | 39 | 30 |
| | R | 38 | 30 | 38 | 30 |
| P5 | | 33 | 30 | 33 | 30 |

## GRID BARS

A01 P01 P02 P03 P5

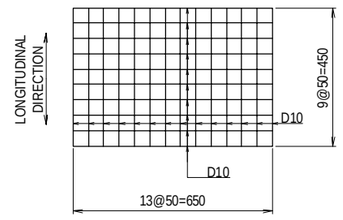


## LOCATION

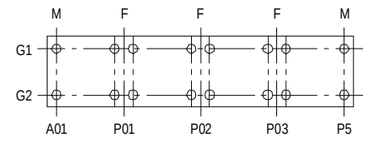


NOTES:
1) All the dimensions and materials of this drawing are shown as reference.
2) Details of the girder and substructure are designed based on this reference drawing.
3) All details and function of the bearing may alter by the proposal of the Contractor and shall be approved by the Engineer.

| PROJECT NAME | FINANCED BY | COUNTERPART | JICA STUDY TEAM |
|---|---|---|---|
| DETAILED DESIGN ON BAGO RIVER BRIDGE CONSTRUCTION PROJECT | JAPAN INTERNATIONAL COOPERATION AGENCY | REPUBLIC OF THE UNION OF MYANMAR MINISTRY OF CONSTRUCTION DEPARTMENT OF BRIDGE | NIPPON KOEI CO., LTD. ORIENTAL CONSULTANTS GLOBAL CO., LTD. METROPOLITAN EXPRESSWAY COMPANY LIMITED CHODAI CO.,LTD. NIPPON ENGINEERING CONSULTANTS CO.,LTD. |

| | NAME | SIGNATURE | DATE | DRAWING TITLE | PACKAGE |
|---|---|---|---|---|---|
| PREPARED BY | M. OHYAMA | 大山満弘 | 15 Jun.2017 | DETAIL OF BEARINGS FOR ON-RAMP (1) | 1 |
| CHECKED BY | T. HAYAKAWA | 早川知邦 | 20 Jun.2017 | | DWG No. |
| APPROVED BY | Y. SANO | 佐野統一 | 21 Jun.2017 | | P1-OR-3001 |

# DETAIL OF BEARINGS FOR ON-RAMP (2)
# ANCHOR BAR (AO1)

## PROFILE S=1:40

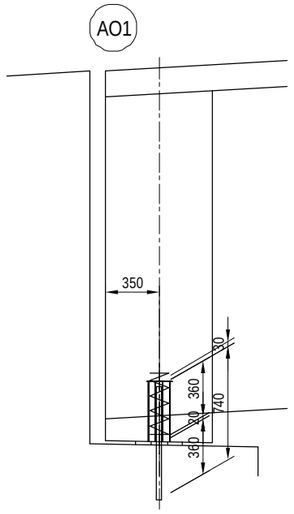


## CROSS SECTION S=1:40

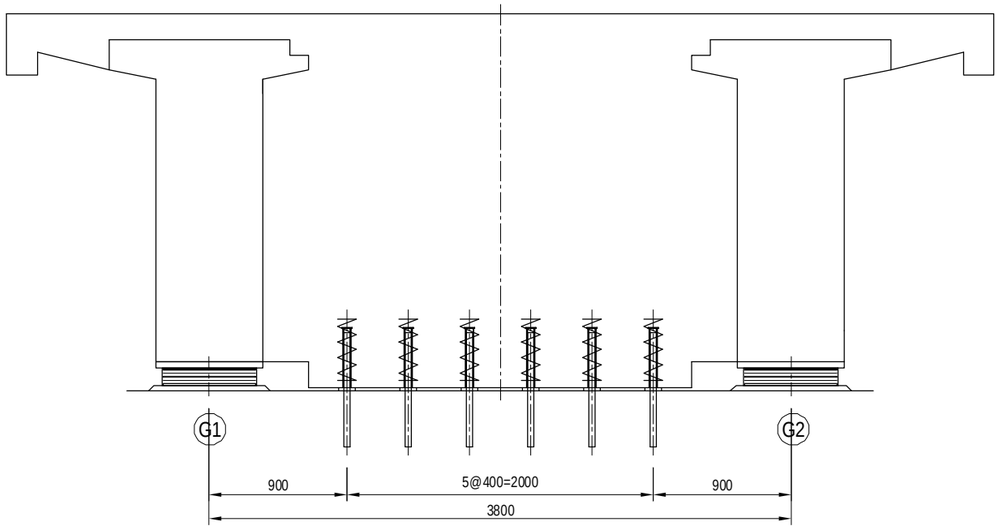


| AO1 MATERIALS (PER 1 ABUTMENT) | | | | | |
|---|---|---|---|---|---|
| NAME OF PART | SIZE | MATERIAL | QUANTITY | WEIGHT | NOTE |
| ANCHOR BAR | Ø36×740 | S35CN | 6 | 35.5 | ZINC GALVANIZE |
| ANCHOR CAP | 46×136×390 | SS400 | 6 | 21.3 | ZINC GALVANIZE |
| SPIRAL REBAR | Ø9×3200 | SS400 | 6 | 9.6 | —— |
| DUST PREVENTING MATERIAL | 110×20×300 | RUBBER | 6 | —— | —— |
| HEX HEAD BOLT | M6×60 | —— | 6 | —— | —— |

## PLAN

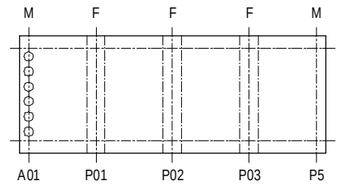


## ANCHOR CAP S=1:20

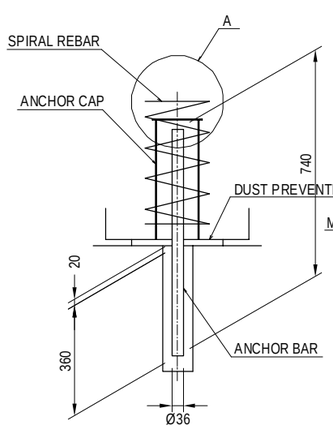


## PART-A DETAIL S=1:10

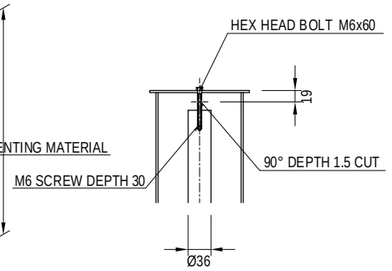


## DUST PREVENTING MATERIAL S=1:20

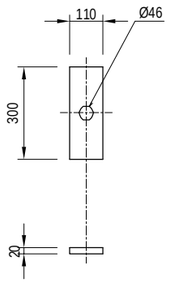


## ANCHOR CAP S=1:20

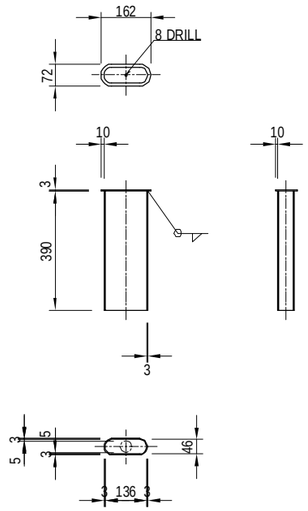


## SPIRAL REBAR S=1:20

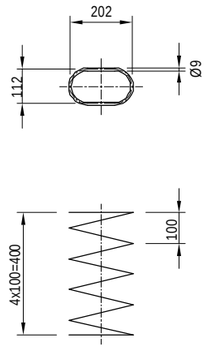


| PROJECT NAME | FINANCED BY | COUNTERPART | JICA STUDY TEAM |
|---|---|---|---|
| DETAILED DESIGN ON BAGO RIVER BRIDGE CONSTRUCTION PROJECT | JAPAN INTERNATIONAL COOPERATION AGENCY | REPUBLIC OF THE UNION OF MYANMAR MINISTRY OF CONSTRUCTION DEPARTMENT OF BRIDGE | NIPPON KOEI CO., LTD. ORIENTAL CONSULTANTS GLOBAL CO., LTD. METROPOLITAN EXPRESSWAY COMPANY LIMITED CHODAI CO.,LTD. NIPPON ENGINEERING CONSULTANTS CO.,LTD. |

| | NAME | SIGNATURE | DATE | DRAWING TITLE | PACKAGE |
|---|---|---|---|---|---|
| PREPARED BY | M. OHYAMA | 大山 満弘 | 15 Jun.2017 | DETAIL OF BEARINGS FOR ON-RAMP (2) | 1 |
| CHECKED BY | T. HAYAKAWA | 早川 知子 | 20 Jun.2017 | | DWG No. |
| APPROVED BY | Y. SANO | 佐野 雄一 | 21 Jun.2017 | | P1-OR-3002 |

# DETAIL OF BEARINGS FOR ON-RAMP (3)
# ANCHOR BAR (PO1)

## PROFILE S=1:40

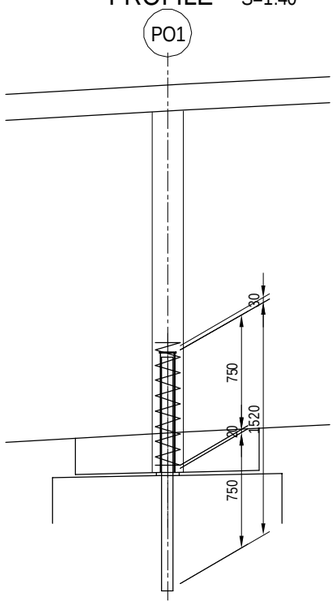


## CROSS SECTION S=1:40

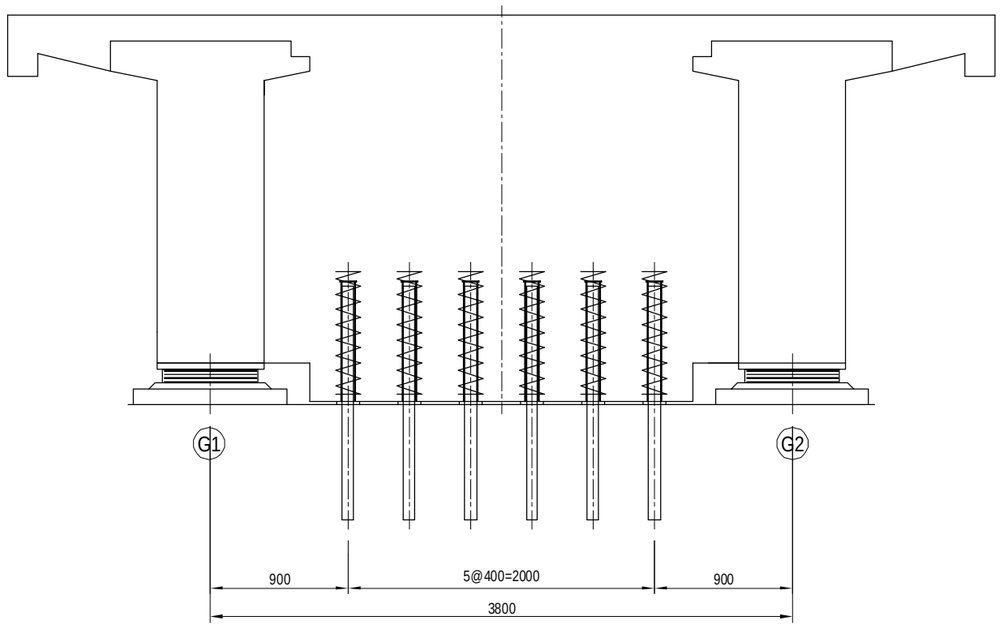


| PO1 MATERIALS (PER 1 PIER) | | | | | |
|---|---|---|---|---|---|
| NAME OF PART | SIZE | MATERIAL | QUANTITY | WEIGHT | NOTE |
| ANCHOR BAR | Ø75×1520 | S35CN | 6 | 316.3 | ZINC GALVANIZE |
| ANCHOR CAP | Ø85×780 | SS400 | 6 | 34.0 | ZINC GALVANIZE |
| SPIRAL REBAR | Ø9×4760 | SS400 | 6 | 14.3 | —— |
| DUST PREVENTING MATERIAL | 150×20×150 | RUBBER | 6 | —— | —— |
| HEX HEAD BOLT | M8×60 | —— | 6 | —— | —— |

## PLAN

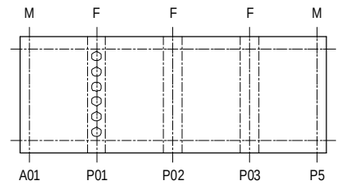


## ANCHOR CAP S=1:20

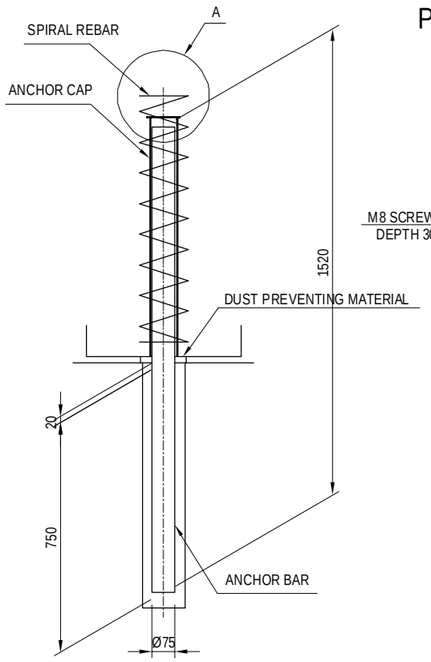


## PART-A DETAIL S=1:10

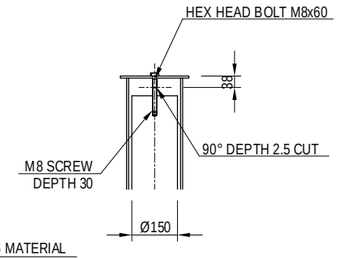


## DUST PREVENTING MATERIAL S=1:20

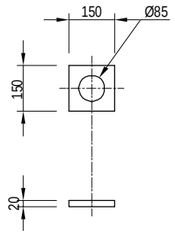


## ANCHOR CAP S=1:20

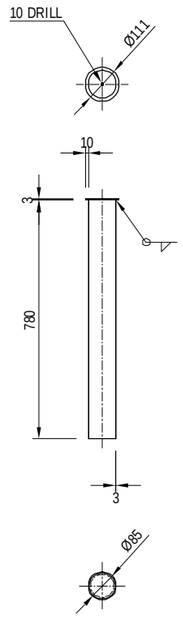


## SPIRAL REBAR S=1:20

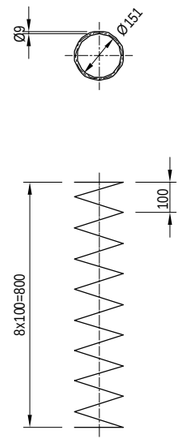


| PROJECT NAME | FINANCED BY | COUNTERPART | JICA STUDY TEAM |
|---|---|---|---|
| DETAILED DESIGN ON BAGO RIVER BRIDGE CONSTRUCTION PROJECT | JAPAN INTERNATIONAL COOPERATION AGENCY | REPUBLIC OF THE UNION OF MYANMAR MINISTRY OF CONSTRUCTION DEPARTMENT OF BRIDGE | NIPPON KOEI CO., LTD. ORIENTAL CONSULTANTS GLOBAL CO., LTD. METROPOLITAN EXPRESSWAY COMPANY LIMITED CHODAI CO.,LTD. NIPPON ENGINEERING CONSULTANTS CO.,LTD. |

| | NAME | SIGNATURE | DATE | DRAWING TITLE | PACKAGE |
|---|---|---|---|---|---|
| PREPARED BY | M. OHYAMA | 大山満弘 | 15 Jun.2017 | DETAIL OF BEARINGS FOR ON-RAMP (3) | 1 |
| CHECKED BY | T. HAYAKAWA | 早川知邦 | 20 Jun.2017 | | DWG No. |
| APPROVED BY | Y. SANO | 佐野裕一 | 21 Jun.2017 | | P1-OR-3003 |

# DETAIL OF BEARINGS FOR ON-RAMP (4)
# ANCHOR BAR (PO2)

## PROFILE S=1:40

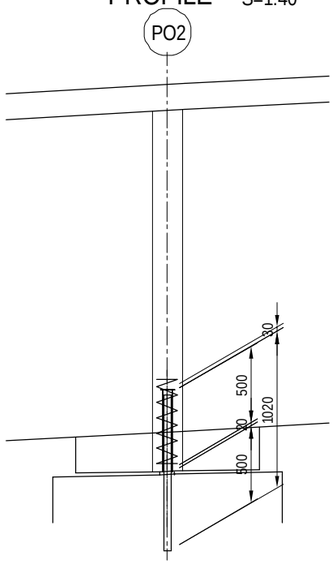


## CROSS SECTION S=1:40

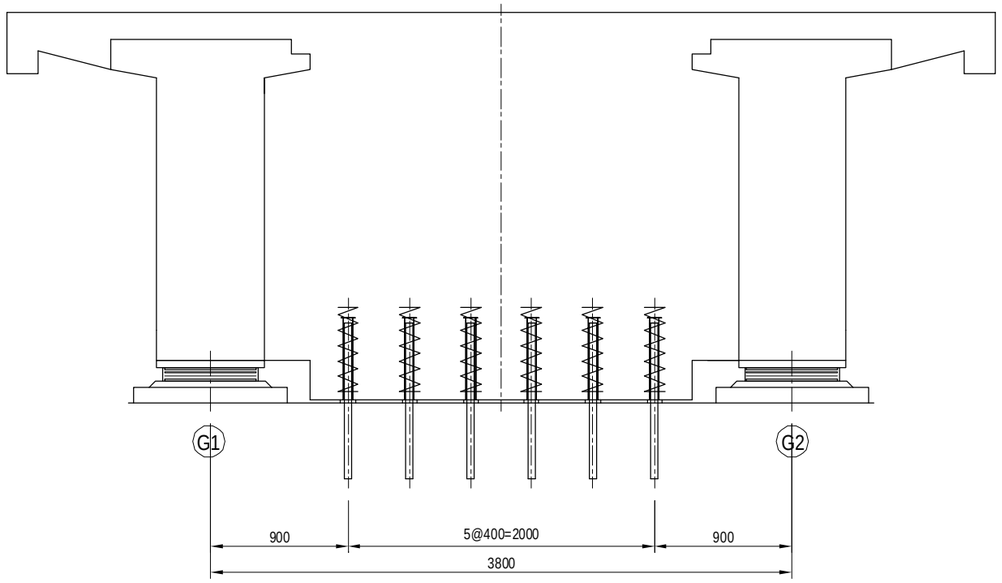


| PO2 MATERIALS (PER 1 PIER) | | | | | |
|---|---|---|---|---|---|
| NAME OF PART | SIZE | MATERIAL | QUANTITY | WEIGHT | NOTE |
| ANCHOR BAR | Ø50×1020 | S35CN | 6 | 94.3 | ZINC GALVANIZE |
| ANCHOR CAP | Ø60×530 | SS400 | 6 | 16.7 | ZINC GALVANIZE |
| SPIRAL REBAR | Ø9×2980 | SS400 | 6 | 8.9 | —— |
| DUST PREVENTING MATERIAL | 120×20×120 | RUBBER | 6 | —— | —— |
| HEX HEAD BOLT | M6×60 | —— | 6 | —— | —— |

## PLAN

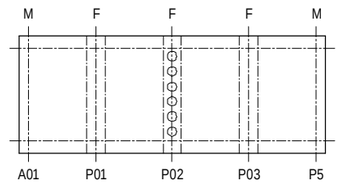


## ANCHOR CAP S=1:20

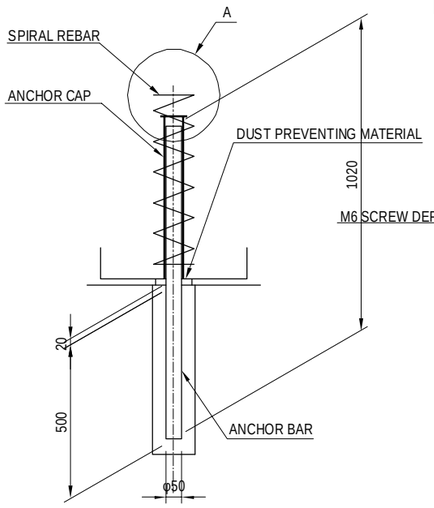


## PART-A DETAIL S=1:10

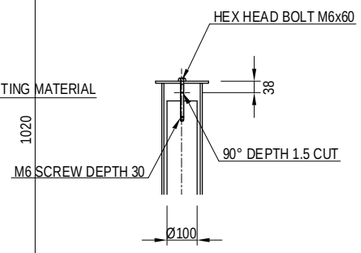


## DUST PREVENTING MATERIAL S=1:20

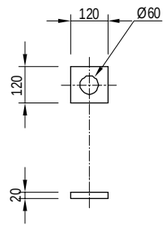


## ANCHOR CAP S=1:20

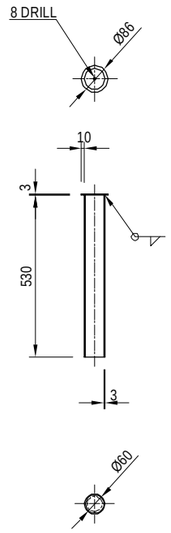


## SPIRAL REBAR S=1:20

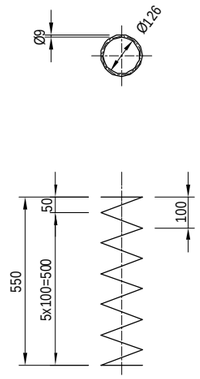


| PROJECT NAME | FINANCED BY | COUNTERPART | JICA STUDY TEAM |
|---|---|---|---|
| DETAILED DESIGN ON BAGO RIVER BRIDGE CONSTRUCTION PROJECT | JAPAN INTERNATIONAL COOPERATION AGENCY | REPUBLIC OF THE UNION OF MYANMAR MINISTRY OF CONSTRUCTION DEPARTMENT OF BRIDGE | NIPPON KOEI CO., LTD. ORIENTAL CONSULTANTS GLOBAL CO., LTD. METROPOLITAN EXPRESSWAY COMPANY LIMITED CHODAI CO.,LTD. NIPPON ENGINEERING CONSULTANTS CO.,LTD. |

| | NAME | SIGNATURE | DATE | DRAWING TITLE | PACKAGE |
|---|---|---|---|---|---|
| PREPARED BY | M. OHYAMA | 大山 満弘 | 15 Jun.2017 | DETAIL OF BEARINGS FOR ON-RAMP (4) | 1 |
| CHECKED BY | T. HAYAKAWA | 早川 知平 | 20 Jun.2017 | | DWG No. |
| APPROVED BY | Y. SANO | 佐野 佳一 | 21 Jun.2017 | | P1-OR-3004 |

# DETAIL OF BEARINGS FOR ON-RAMP (5)
# ANCHOR BAR (PO3)

## PROFILE S=1:40

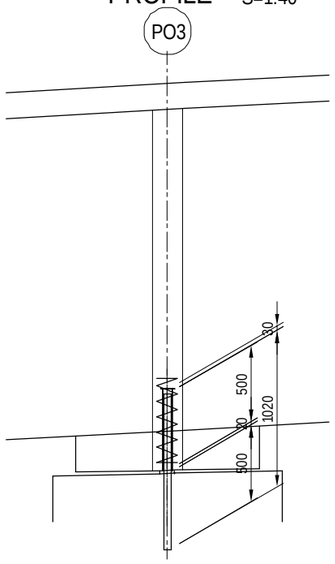


## CROSS SECTION S=1:40

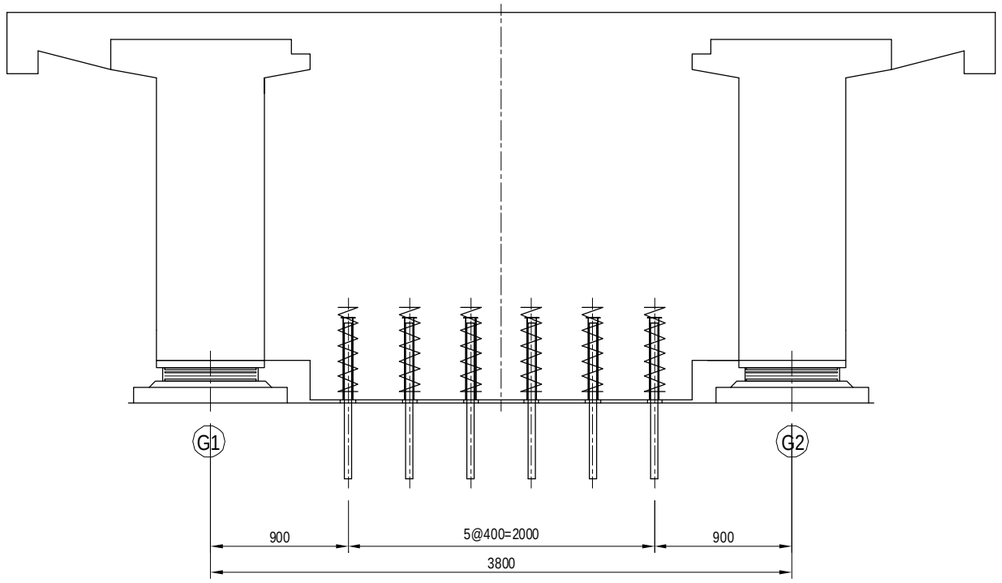


| PO3 MATERIALS (PER 1 PIER) | | | | | |
|---|---|---|---|---|---|
| NAME OF PART | SIZE | MATERIAL | QUANTITY | WEIGHT | NOTE |
| ANCHOR BAR | Ø50×1020 | S35CN | 6 | 94.3 | ZINC GALVANIZE |
| ANCHOR CAP | Ø60×530 | SS400 | 6 | 16.7 | ZINC GALVANIZE |
| SPIRAL REBAR | Ø9×2980 | SS400 | 6 | 8.9 | —— |
| DUST PREVENTING MATERIAL | 120×20×120 | RUBBER | 6 | —— | —— |
| HEX HEAD BOLT | M6×60 | —— | 6 | —— | —— |

## PLAN

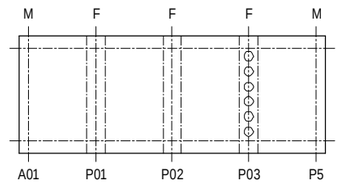


## ANCHOR CAP S=1:20

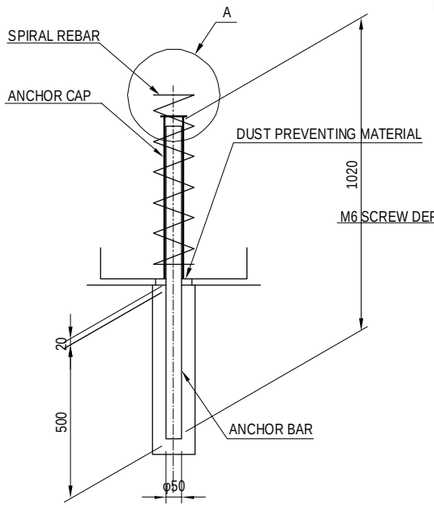


## PART-A DETAIL S=1:10

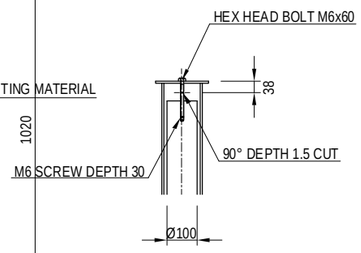


## DUST PREVENTING MATERIAL S=1:20

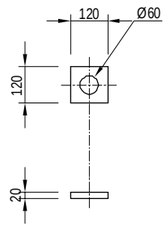


## ANCHOR CAP S=1:20

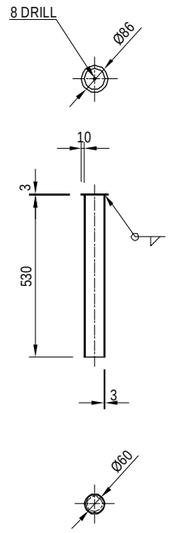


## SPIRAL REBAR S=1:20

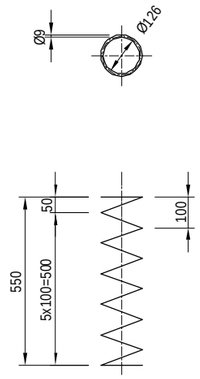


| PROJECT NAME | FINANCED BY | COUNTERPART | JICA STUDY TEAM |
|---|---|---|---|
| DETAILED DESIGN ON BAGO RIVER BRIDGE CONSTRUCTION PROJECT | JAPAN INTERNATIONAL COOPERATION AGENCY | REPUBLIC OF THE UNION OF MYANMAR MINISTRY OF CONSTRUCTION DEPARTMENT OF BRIDGE | NIPPON KOEI CO., LTD. ORIENTAL CONSULTANTS GLOBAL CO., LTD. METROPOLITAN EXPRESSWAY COMPANY LIMITED CHODAI CO.,LTD. NIPPON ENGINEERING CONSULTANTS CO.,LTD. |

| | NAME | SIGNATURE | DATE | DRAWING TITLE | PACKAGE |
|---|---|---|---|---|---|
| PREPARED BY | M. OHYAMA | 大山 満弘 | 15 Jun.2017 | DETAIL OF BEARINGS FOR ON-RAMP (5) | 1 |
| CHECKED BY | T. HAYAKAWA | 早川 知平 | 20 Jun.2017 | | DWG No. |
| APPROVED BY | Y. SANO | 佐野 佳一 | 21 Jun.2017 | | P1-OR-3005 |

# DETAIL OF BEARINGS FOR ON-RAMP (6)
# ANCHOR BAR (P5)

## PROFILE S=1:40

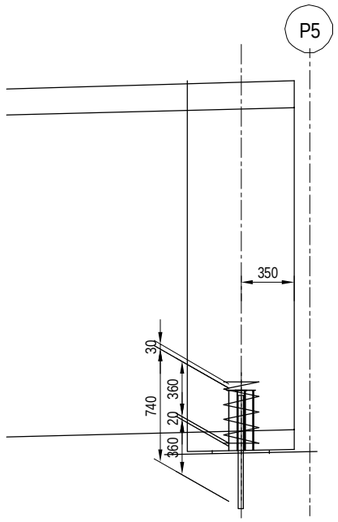


## CROSS SECTION S=1:40

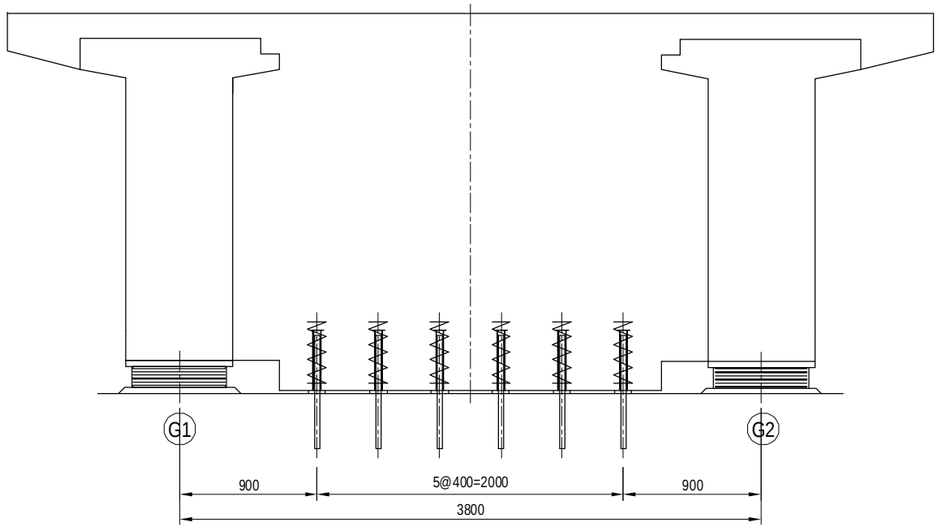


| P5 MATERIALS (PER 1 PIER) | | | | | |
|---|---|---|---|---|---|
| NAME OF PART | SIZE | MATERIAL | QUANTITY | WEIGHT | NOTE |
| ANCHOR BAR | Ø36×740 | S35CN | 6 | 35.5 | ZINC GALVANIZE |
| ANCHOR CAP | 46×156×390 | SS400 | 6 | 23.8 | ZINC GALVANIZE |
| SPIRAL REBAR | Ø9×3440 | SS400 | 6 | 10.3 | —— |
| DUST PREVENTING MATERIAL | 110×20×380 | RUBBER | 6 | —— | —— |
| HEX HEAD BOLT | M6×60 | —— | 6 | —— | —— |

## PLAN

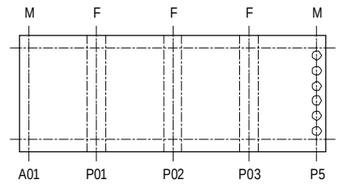


## ANCHOR CAP S=1:20

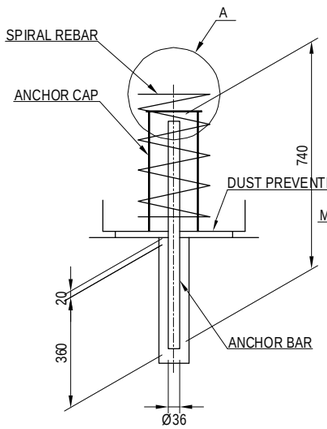


## PART-A DETAIL S=1:10

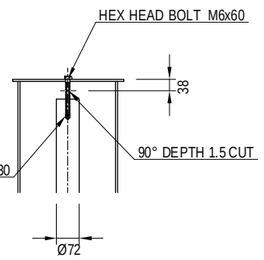


## DUST PREVENTING MATERIAL S=1:20

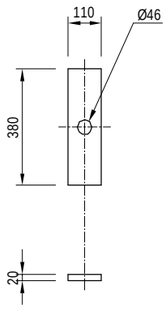


## ANCHOR CAP S=1:20

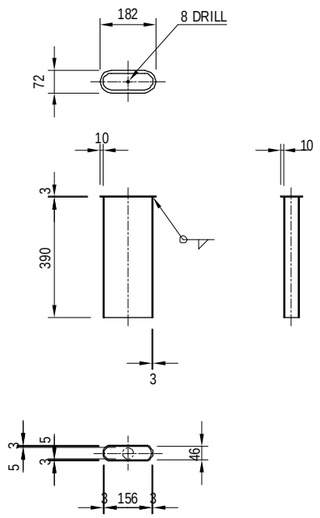


## SPIRAL REBAR S=1:20

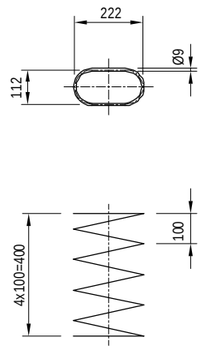


| PROJECT NAME | FINANCED BY | COUNTERPART | JICA STUDY TEAM |
|---|---|---|---|
| DETAILED DESIGN ON BAGO RIVER BRIDGE CONSTRUCTION PROJECT | JAPAN INTERNATIONAL COOPERATION AGENCY | REPUBLIC OF THE UNION OF MYANMAR MINISTRY OF CONSTRUCTION DEPARTMENT OF BRIDGE | NIPPON KOEI CO., LTD. ORIENTAL CONSULTANTS GLOBAL CO., LTD. METROPOLITAN EXPRESSWAY COMPANY LIMITED CHODAI CO.,LTD. NIPPON ENGINEERING CONSULTANTS CO.,LTD. |

| | NAME | SIGNATURE | DATE | DRAWING TITLE | PACKAGE |
|---|---|---|---|---|---|
| PREPARED BY | M. OHYAMA | 大山 満弘 | 15 Jun.2017 | DETAIL OF BEARINGS FOR ON-RAMP (6) | 1 |
| CHECKED BY | T. HAYAKAWA | 早川 知子 | 20 Jun.2017 | | DWG No. |
| APPROVED BY | Y. SANO | 佐野 佳一 | 21 Jun.2017 | | P1-OR-3006 |

# DETAIL OF EXPANSION JOINT FOR ON-RAMP
# AO1

## CROSS SECTION s = 1 : 80

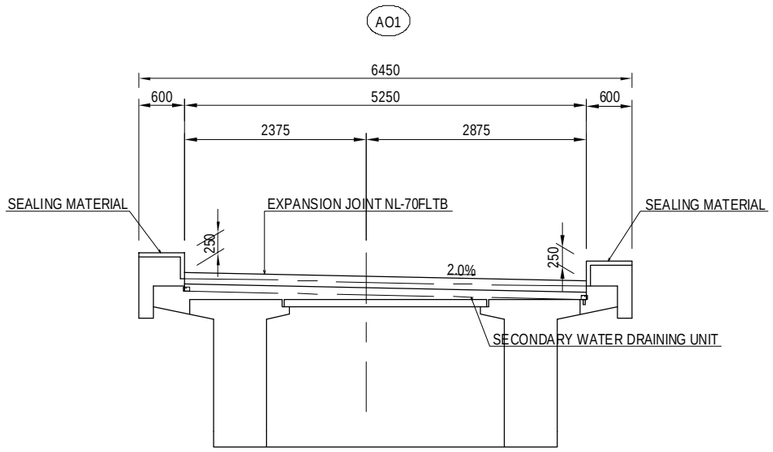


## PLAN VIEW S = 1 : 20

NL - 70FLTB

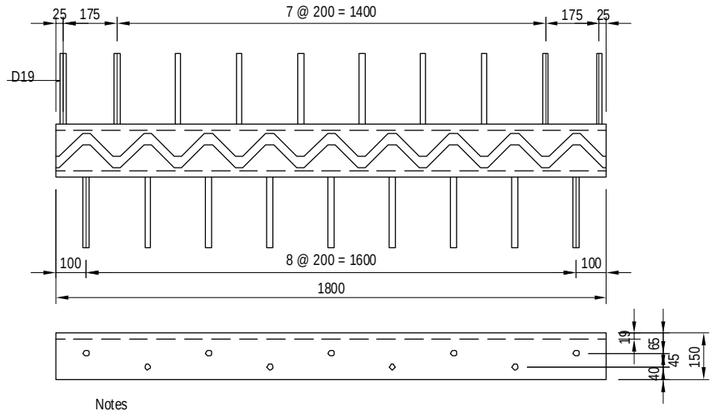


Notes
-The vertical position of stud rebars is not the one of standard specification

DESIGN MOVEMENT OF EXPANSION JOINT

| AO1 | | GIRDER ⊿L (+) | GIRDER ⊿L (-) | GIRDER ⊿L |
|---|---|---|---|---|
| SERVICE STATE | TEMPERATURE | 10 mm | 10 mm | 20 mm |
| | CREEP | - | 8 mm | 8 mm |
| | SHRINKAGE | - | 7 mm | 7 mm |
| | ALLOWANCE | 5 mm | 5 mm | 10 mm |
| | TOTAL | 15 mm | 30 mm | 45 mm |
| SEISMIC STATE | EARTHQUAKE | 16 mm | 16 mm | 32 mm |
| | ALLOWANCE | 15 mm | 15 mm | 30 mm |
| | TOTAL | 31 mm | 31 mm | 62 mm |
| | DESIGN MOVEMENT | 62 mm | | |

## SECTION OF EXPANSION JOINT S = 1 : 10

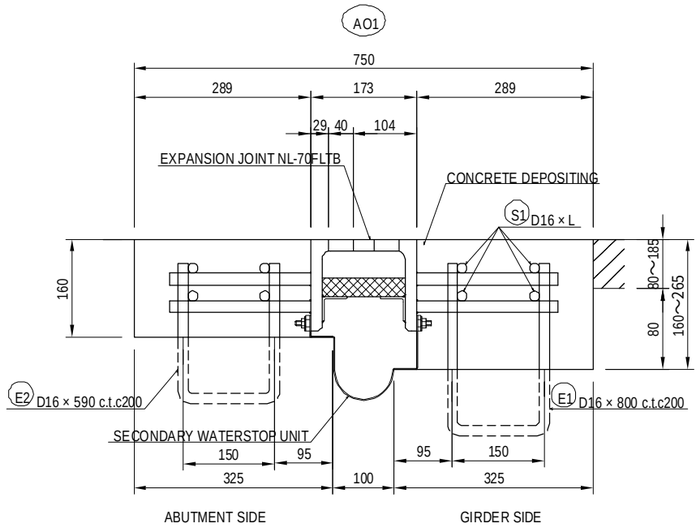


## DETAIL OF REBAR S = 1 : 10

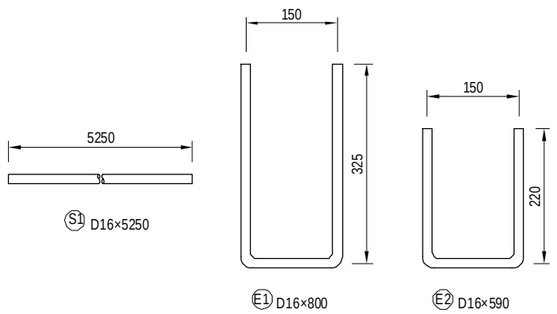


## DETAIL OF SEALING MATERIAL S = 1 : 3

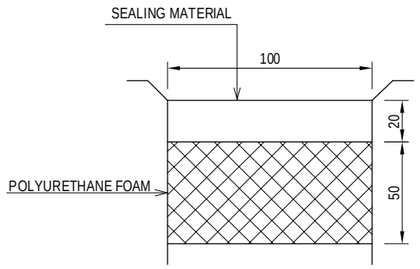


## PLAN

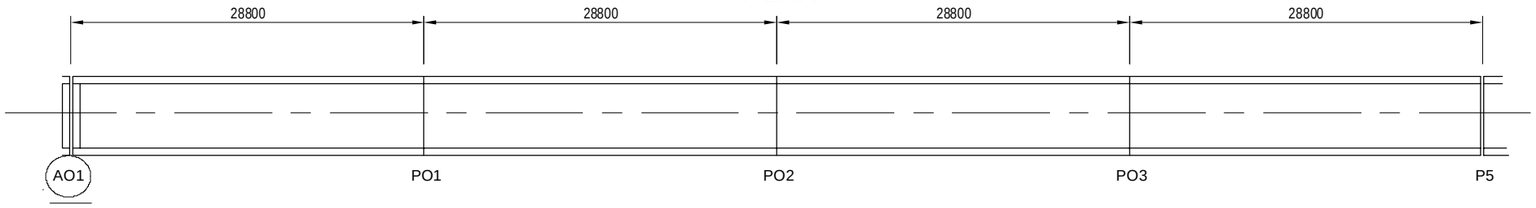


| ITEM | | UNIT | AO1 | NOTE |
|---|---|---|---|---|
| NL-70FLTB | | m | 5.2 5.0 | |
| CONCRETE | | $m^3$ | 0.5 6 | |
| SEALING MATERIAL | | L | 3.4 | |
| S1 | D16×5250 (SD345) | kg | 6 5.5 | |
| E1 | D16×800 (SD345) | kg | 3 2.4 | 2 6 UNIT |
| E2 | D16×590 (SD345) | kg | 2 3.9 | 2 6 UNIT |
| SUM | | kg | 5 6.3 | |

NOTES:
1) All the dimensions and materials of this drawing are shown as reference.
2) Details of the slab and girder are designed based on this reference drawing.
3) All details and function of the expansion joint may alter by the proposal of the Contractor and shall be approved by the Engineer.
4) The expansion joint shall be set just before the start of service in consideration of thermal expansion, creep and shrinkage of concrete girder.

| PROJECT NAME | FINANCED BY | COUNTERPART | JICA STUDY TEAM |
|---|---|---|---|
| DETAILED DESIGN ON BAGO RIVER BRIDGE CONSTRUCTION PROJECT | JAPAN INTERNATIONAL COOPERATION AGENCY | REPUBLIC OF THE UNION OF MYANMAR MINISTRY OF CONSTRUCTION DEPARTMENT OF BRIDGE | NIPPON KOEI CO., LTD. ORIENTAL CONSULTANTS GLOBAL CO., LTD. METROPOLITAN EXPRESSWAY COMPANY LIMITED CHODAI CO.,LTD. NIPPON ENGINEERING CONSULTANTS CO.,LTD. |

| | NAME | SIGNATURE | DATE |
|---|---|---|---|
| PREPARED BY | M. OHYAMA | 大山満弘 | 15 Jun.2017 |
| CHECKED BY | T. HAYAKAWA | 早川知邦 | 20 Jun.2017 |
| APPROVED BY | Y. SANO | 佐野裕一 | 21 Jun.2017 |

DRAWING TITLE: DETAIL OF EXPANSION JOINT FOR ON-RAMP

PACKAGE: 1

DWG No.: P1-OR-3101

# DETAIL OF CURB FOR ON-RAMP

## CROSS SECTION S = 1 : 20

LEFT

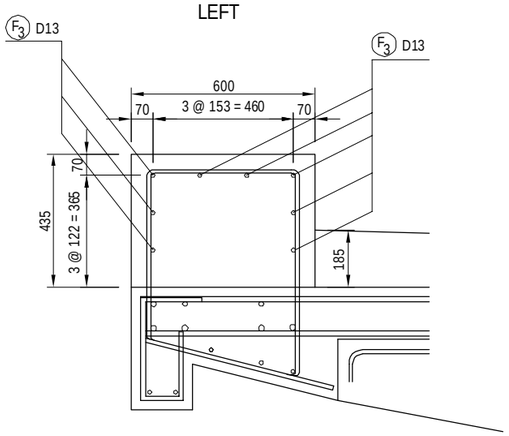


RIGHT

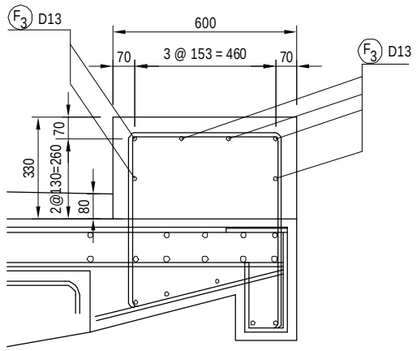


S = 1 : 20

## PLAN S = 1 : 50

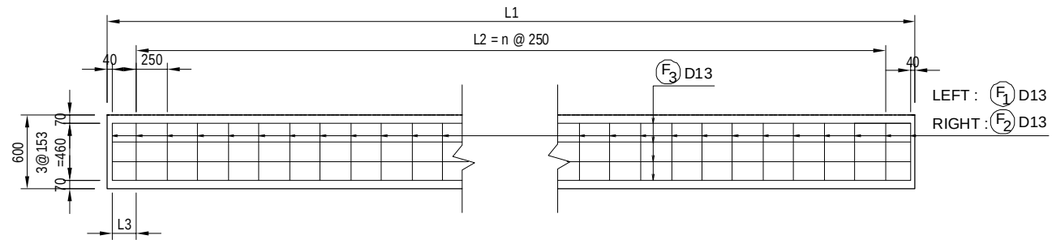


| TYPE | L1 | L2 | n | L3 | L4 |
|---|---|---|---|---|---|
| A | 28700 | 28250 | 113 | 185 | 5400 |
| B | 28800 | 28250 | 113 | 235 | 5500 |
| C | 28845 | 28500 | 114 | 133 | 5550 |
| D | 28531 | 28000 | 112 | 226 | 5231 |

## EXPANSION JOINT

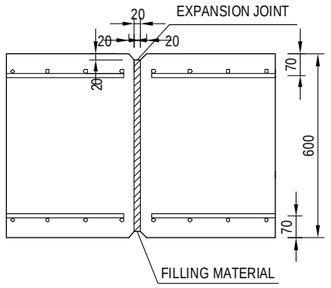


## V-CUT

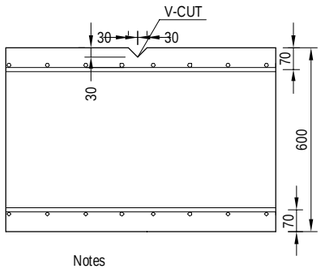


Notes
- Install V-cut approximately about every 10m .

S = 1 : 20

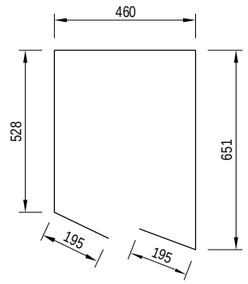


F1 465 - D13 × 2030

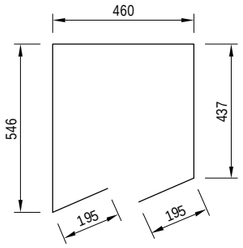


F2 463 - D13 × 1840

## BAR STATISTICS TABLE (SD345)

| Bar Mark | Bar Size | Length (mm) | No. of Bar (Nos) | Unit Wt (kg/m) | Rod Wt (kg) | Total Weight (kg) | Shape |
|---|---|---|---|---|---|---|---|
| | | | | | | | |
| F1 | D13 | 2030 | 465 | 0.995 | 2.020 | 939.3 | |
| F2 | 〃 | 1840 | 463 | 0.995 | 1.831 | 847.8 | |
| F3 | 〃 | 29460 (average) | 56 | 0.995 | 29.313 | 1642.5 | —— |
| | | | | | | | |
| | | | | | TOTAL | 3429.6 kg | |
| | | | | | | | |
| | | | | | | | |

S = 1 : 500

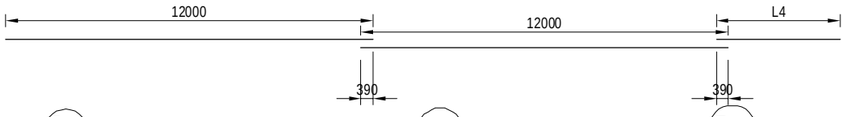


F3-1 56 - D13 × 12000

F3-2 56 - D13 × 12000

F3-3 56 - D13 × L4

## PLAN S = 1 : 500

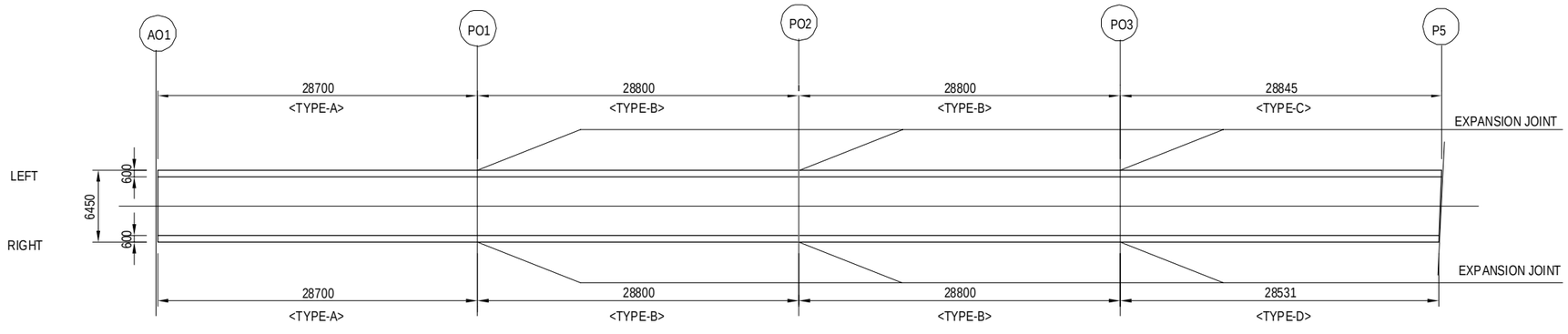


| PROJECT NAME | FINANCED BY | COUNTERPART | JICA STUDY TEAM |
|---|---|---|---|
| DETAILED DESIGN ON BAGO RIVER BRIDGE CONSTRUCTION PROJECT | JAPAN INTERNATIONAL COOPERATION AGENCY | REPUBLIC OF THE UNION OF MYANMAR MINISTRY OF CONSTRUCTION DEPARTMENT OF BRIDGE | NIPPON KOEI CO., LTD. ORIENTAL CONSULTANTS GLOBAL CO., LTD. METROPOLITAN EXPRESSWAY COMPANY LIMITED CHODAI CO.,LTD. NIPPON ENGINEERING CONSULTANTS CO.,LTD. |

| | NAME | SIGNATURE | DATE |
|---|---|---|---|
| PREPARED BY | M. OHYAMA | 大山満弘 | 15 Jun.2017 |
| CHECKED BY | T. HAYAKAWA | 早川和邦 | 20 Jun.2017 |
| APPROVED BY | Y. SANO | 佐野裕一 | 21 Jun.2017 |

| DRAWING TITLE | PACKAGE |
|---|---|
| DETAIL OF CURB FOR ON-RAMP | 1 |
| | DWG No. |
| | P1-OR-3201 |

# DETAIL OF LIGHTING BASE FOR ON-RAMP

S=1:50

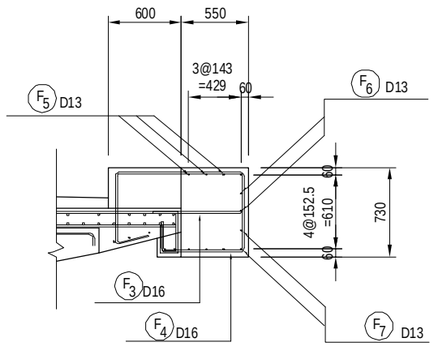


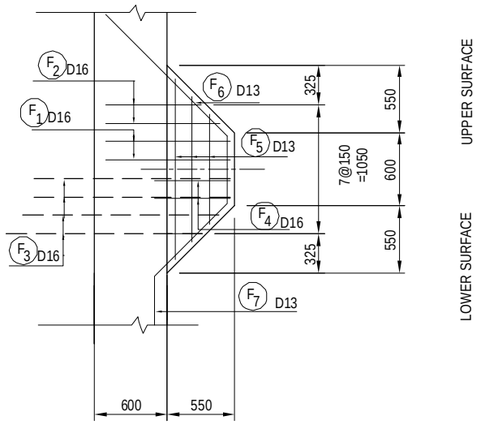


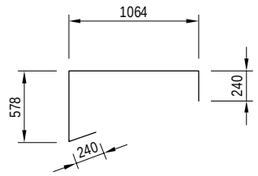


F1 4 - D16 × 2130

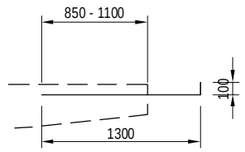


F3 8 - D16 × 1400

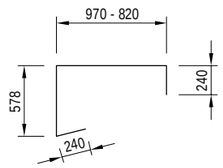


F2 4 - D16 × 1960 (AVERAGE LENGTH)

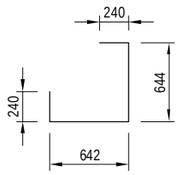


F4 4 - D16 × 1770

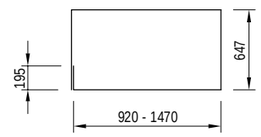


F5 3 - D13 × 3880 (AVERAGE LENGTH)

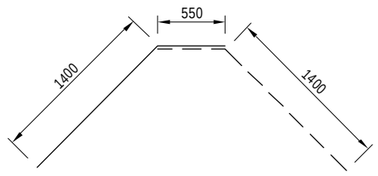


F6 4 - D13 × 1950

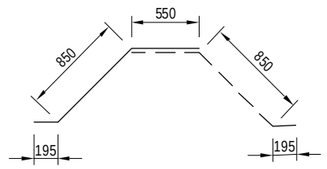


F7 4 - D13 × 1600

BAR STATISTICS TABLE (SD345 PER LIGHTING BASE)

| Bar Mark | Bar Size | Length (mm) | No.of Bar (Nos) | Unit Wt (kg/m) | Rod Wt (kg) | Total Weight (kg) | Shape |
|---|---|---|---|---|---|---|---|
| F1 | D16 | 2130 | 4 | 1.560 | 3.323 | 13.3 | |
| F2 | 〃 | 1960 | 4 | 〃 | 3.058 | 12.2 | |
| F3 | 〃 | 1400 | 8 | 〃 | 2.184 | 17.5 | |
| F4 | 〃 | 1770 | 4 | 〃 | 2.761 | 11.0 | |
| F5 | D13 | 3880 | 3 | 0.995 | 3.861 | 11.6 | |
| F6 | 〃 | 1950 | 4 | 〃 | 1.940 | 7.8 | |
| F7 | 〃 | 1600 | 4 | 〃 | 1.592 | 6.4 | |
| | | | | | D16 | 54.0 kg | |
| | | | | | D13 | 25.8 kg | |
| | | | | | Total Weight | 79.8 kg | |

NOTES:
Number and location of lighting base shall be referred to the drawing of "F. Lighting" series P1-EL.

| PROJECT NAME | FINANCED BY | COUNTERPART | JICA STUDY TEAM |
|---|---|---|---|
| DETAILED DESIGN ON BAGO RIVER BRIDGE CONSTRUCTION PROJECT | JAPAN INTERNATIONAL COOPERATION AGENCY | REPUBLIC OF THE UNION OF MYANMAR MINISTRY OF CONSTRUCTION DEPARTMENT OF BRIDGE | NIPPON KOEI CO., LTD. ORIENTAL CONSULTANTS GLOBAL CO., LTD. METROPOLITAN EXPRESSWAY COMPANY LIMITED CHODAI CO.,LTD. NIPPON ENGINEERING CONSULTANTS CO.,LTD. |

| | NAME | SIGNATURE | DATE |
|---|---|---|---|
| PREPARED BY | M. OHYAMA | 大山満弘 | 15 Jun.2017 |
| CHECKED BY | T. HAYAKAWA | 早川知邦 | 20 Jun.2017 |
| APPROVED BY | Y. SANO | 佐野裕一 | 21 Jun.2017 |

DRAWING TITLE: DETAIL OF LIGHTING BASE FOR ON-RAMP

PACKAGE: 1

DWG No.: P1-OR-3301

# DETAIL OF RAILINGS FOR ON-RAMP (1)

## PROFILE S=1:500

BARRIER (L)

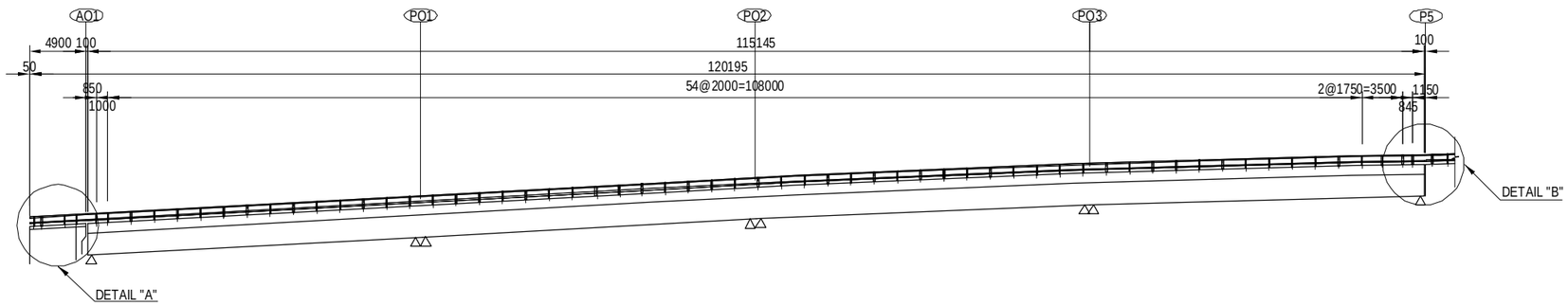


BARRIER (R)

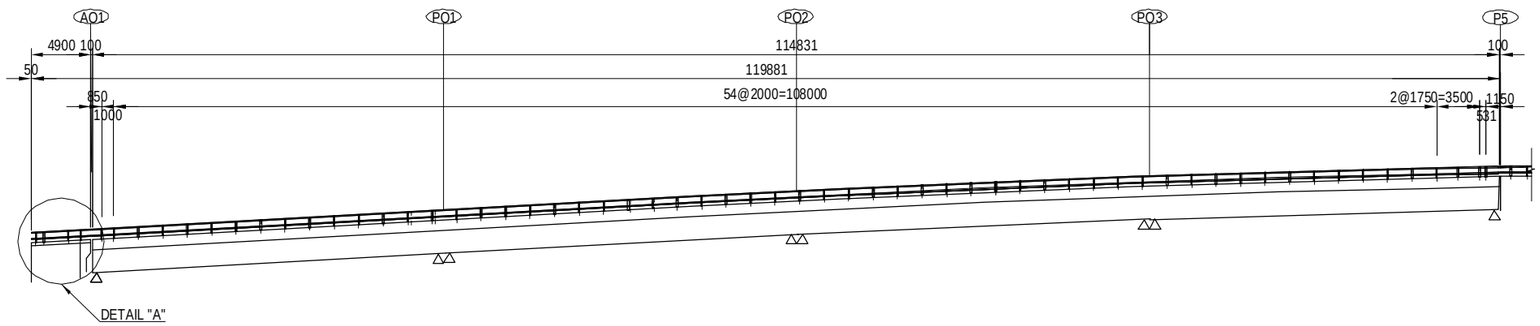


## DETAIL OF "A" S=1:200

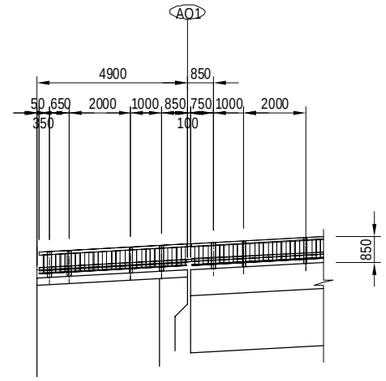


## DETAIL OF "B" S=1:200

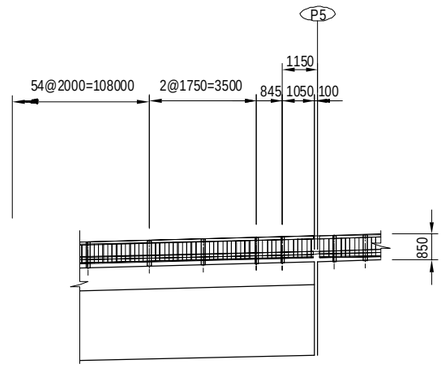


## PLAN VIEW S=1:500

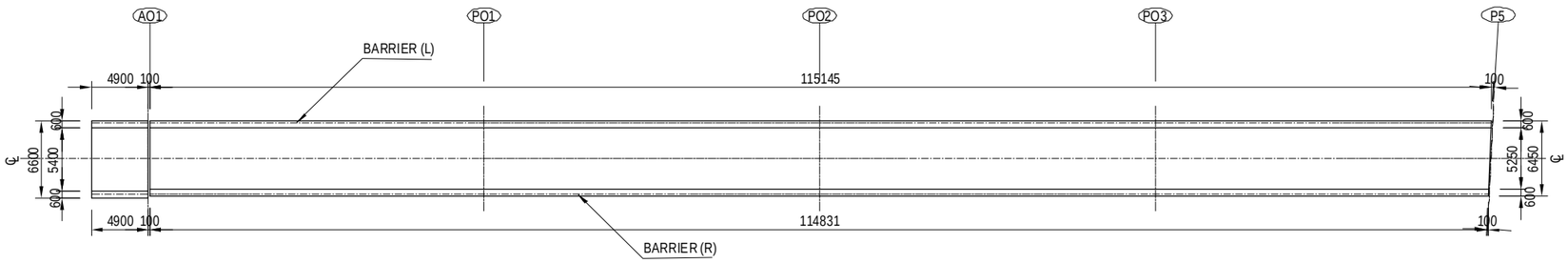


| PROJECT NAME | FINANCED BY | COUNTERPART | JICA STUDY TEAM |
|---|---|---|---|
| DETAILED DESIGN ON BAGO RIVER BRIDGE CONSTRUCTION PROJECT | JAPAN INTERNATIONAL COOPERATION AGENCY | REPUBLIC OF THE UNION OF MYANMAR MINISTRY OF CONSTRUCTION DEPARTMENT OF BRIDGE | NIPPON KOEI CO., LTD. ORIENTAL CONSULTANTS GLOBAL CO., LTD. METROPOLITAN EXPRESSWAY COMPANY LIMITED CHODAI CO.,LTD. NIPPON ENGINEERING CONSULTANTS CO.,LTD. |

| | NAME | SIGNATURE | DATE | DRAWING TITLE | PACKAGE |
|---|---|---|---|---|---|
| PREPARED BY | M. OHYAMA | 大山満弘 | 15 Jun.2017 | DETAIL OF RAILINGS FOR ON-RAMP (1) | 1 |
| CHECKED BY | T. HAYAKAWA | 早川知邦 | 20 Jun.2017 | | DWG No. |
| APPROVED BY | Y. SANO | 佐野雅一 | 21 Jun.2017 | | P1-OR-3401 |

# DETAIL OF RAILINGS FOR ON-RAMP (2)

## TYPICAL CROSS SECTION S=1:100

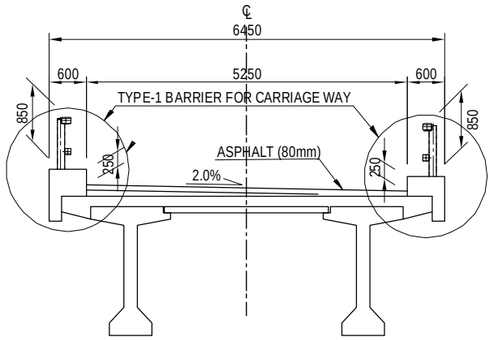


## TYPE-1 BARRIER FOR CARRIAGE WAY S=1:40

### CROSS SECTIONAL VIEW

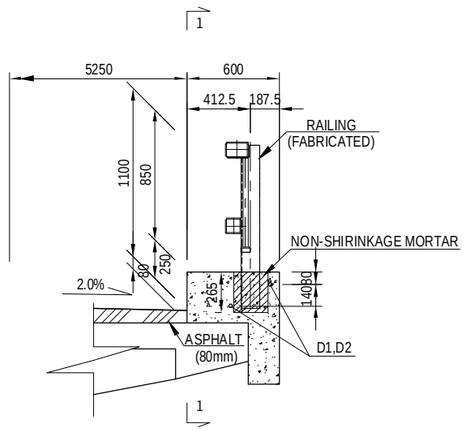


### 1 - 1

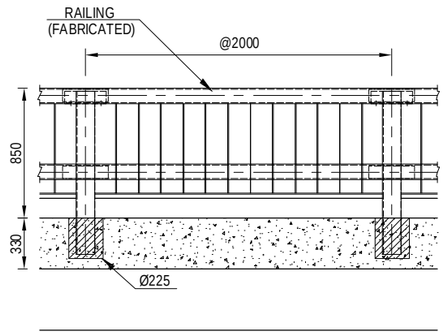


### PLAN VIEW

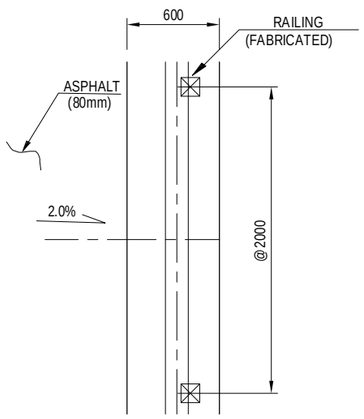


### REINFORCEMENT FOR RAILING ANCHORAGE

INTERMEDIATE POSTS

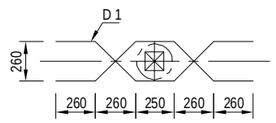


END POSTS

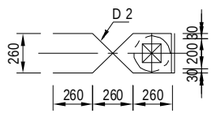


### BAR STATISTICS TABLE

| REBAR NO. | DIA (mm) | LENGTH (mm) | NUMBERS | UNIT WEIGHT (kg/m) | WEIGHT PER UNIT (kg) | WEIGHT (kg) | SHAPE |
|---|---|---|---|---|---|---|---|
| D 1 | 25 | 1 510 | 236 | 3.980 | 6.01 | 1418 | |
| D 2 | 25 | 1 150 | 16 | 3.980 | 4.58 | 73 | |
| | | | | | TOTAL | 1491 kg | |
| | | | | | | | |

| PROJECT NAME | FINANCED BY | COUNTERPART | JICA STUDY TEAM |
|---|---|---|---|
| DETAILED DESIGN ON BAGO RIVER BRIDGE CONSTRUCTION PROJECT | JAPAN INTERNATIONAL COOPERATION AGENCY | REPUBLIC OF THE UNION OF MYANMAR MINISTRY OF CONSTRUCTION DEPARTMENT OF BRIDGE | NIPPON KOEI CO., LTD. ORIENTAL CONSULTANTS GLOBAL CO., LTD. METROPOLITAN EXPRESSWAY COMPANY LIMITED CHODAI CO.,LTD. NIPPON ENGINEERING CONSULTANTS CO.,LTD. |

| | NAME | SIGNATURE | DATE |
|---|---|---|---|
| PREPARED BY | M. OHYAMA | 大山満弘 | 15 Jun.2017 |
| CHECKED BY | T. HAYAKAWA | 早川知邦 | 20 Jun.2017 |
| APPROVED BY | Y. SANO | 佐野雅一 | 21 Jun.2017 |

| DRAWING TITLE | PACKAGE |
|---|---|
| DETAIL OF RAILINGS FOR ON-RAMP (2) | 1 |
| | DWG No. |
| | P1-OR-3402 |

# DETAIL OF DRAINAGE FOR ON-RAMP (1) S = 1 : 400

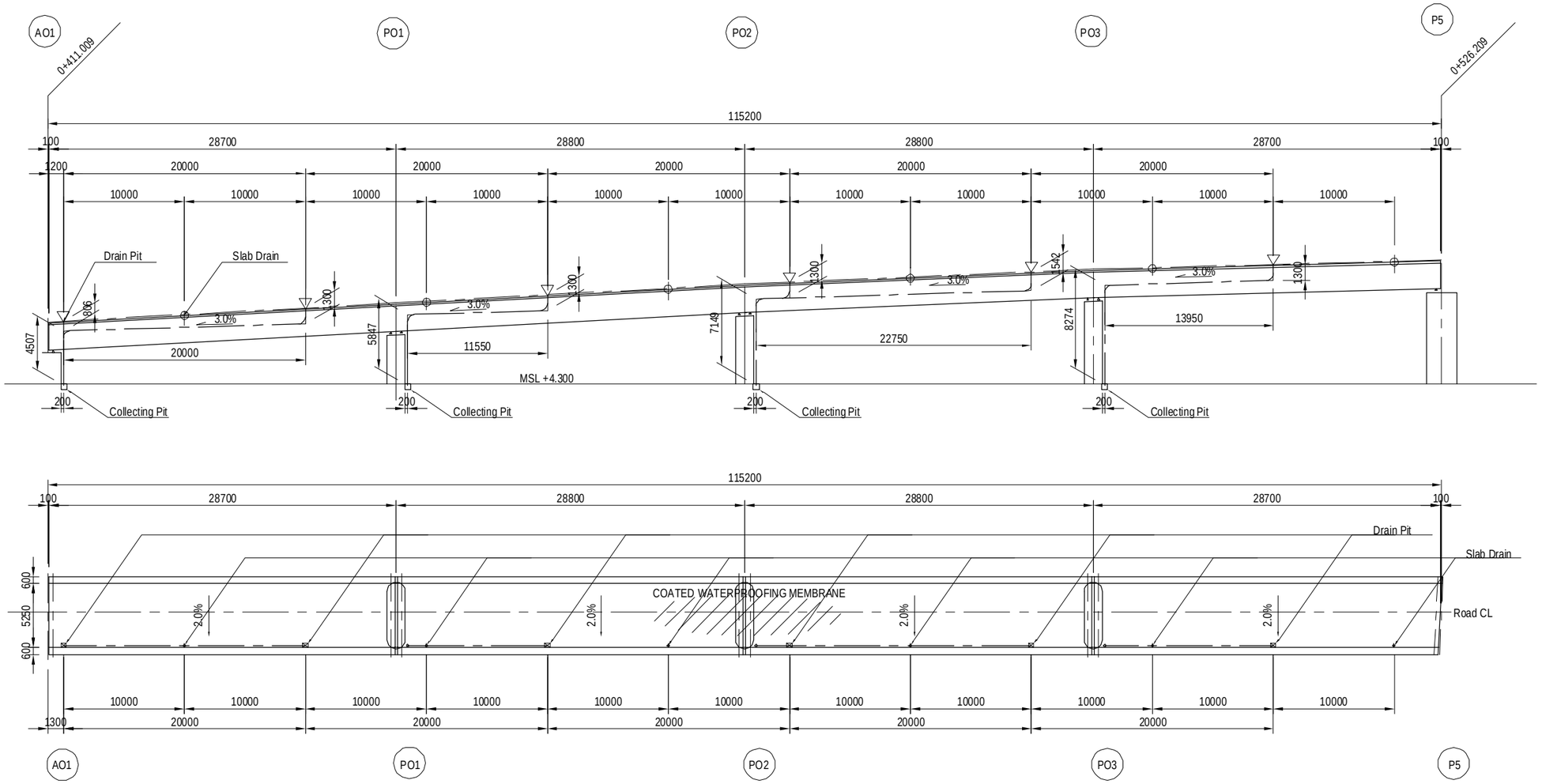


| PROJECT NAME | FINANCED BY | COUNTERPART | JICA STUDY TEAM |
|---|---|---|---|
| DETAILED DESIGN ON BAGO RIVER BRIDGE CONSTRUCTION PROJECT | JAPAN INTERNATIONAL COOPERATION AGENCY | REPUBLIC OF THE UNION OF MYANMAR MINISTRY OF CONSTRUCTION DEPARTMENT OF BRIDGE | NIPPON KOEI CO., LTD. ORIENTAL CONSULTANTS GLOBAL CO., LTD. METROPOLITAN EXPRESSWAY COMPANY LIMITED CHODAI CO.,LTD. NIPPON ENGINEERING CONSULTANTS CO.,LTD. |

| | NAME | SIGNATURE | DATE |
|---|---|---|---|
| PREPARED BY | M. OHYAMA | 大山満弘 | 15 Jun.2017 |
| CHECKED BY | T. HAYAKAWA | 早川知邦 | 20 Jun.2017 |
| APPROVED BY | Y. SANO | 佐野裕一 | 21 Jun.2017 |

DRAWING TITLE: DETAIL OF DRAINAGE FOR ON-RAMP (1)

PACKAGE: 1

DWG No.: P1-OR-3501

# DETAIL OF DRAINAGE FOR ON-RAMP (2) S=1:100

## CATCH PIT SECTION

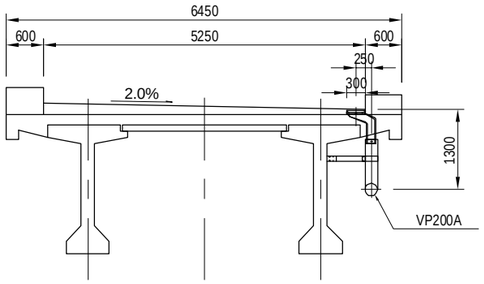


## DETAIL OF CATCH BASIN S=1:20

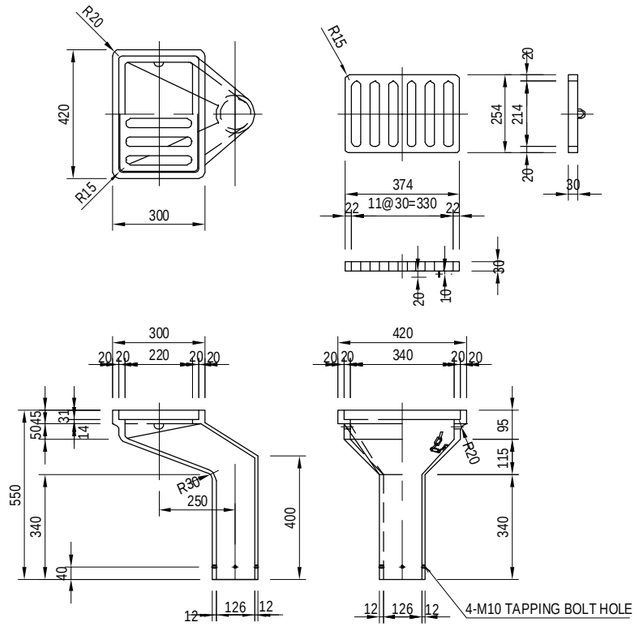


## SUPPORT SECTION (ABUTMENT)

CROSS SECTION

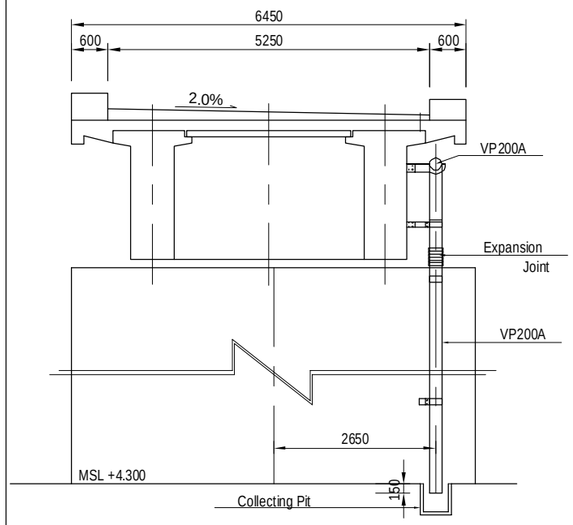


## SUPPORT SECTION (PIER)

CROSS SECTION

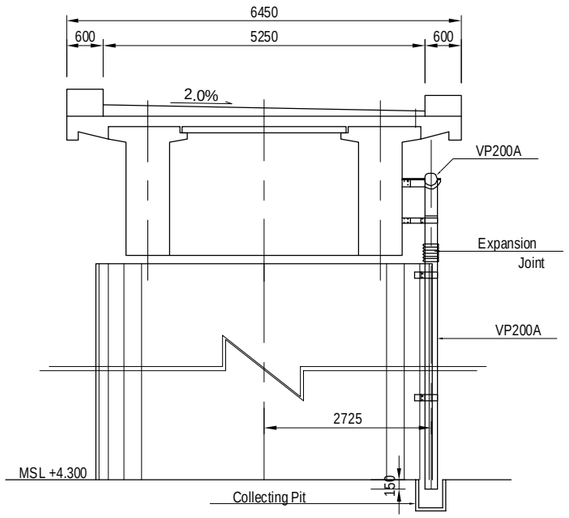


PLAN

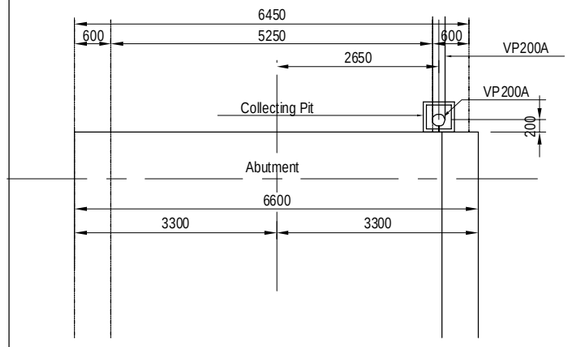


PLAN

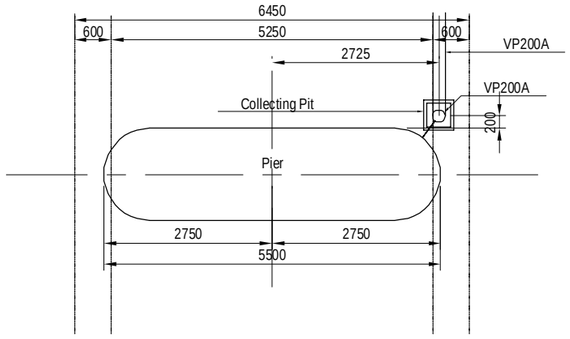


## REBAR ARRANGEMENT S=1:20

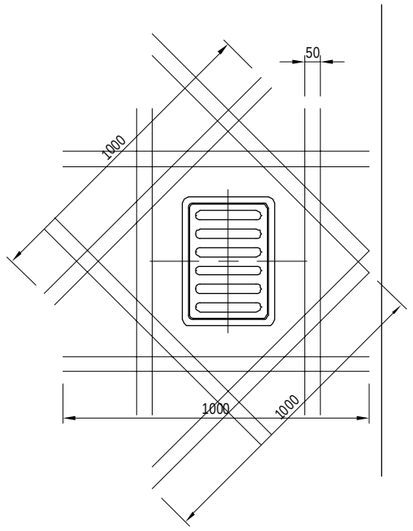


### BAR STATISTICS TABLE

| REBAR NO. | DIA (mm) | LENGTH (mm) | NUMBERS | UNIT WEIGHT (kg/m) | WEIGHT PER UNIT (kg) | WEIGHT (kg) | REMARKS |
|---|---|---|---|---|---|---|---|
| D 1 | 16 | 1 000 | 32 | 1.560 | 1.56 | 50 | |
| | | | | | TOTAL | 50 | |
| | | | | | | | |
| | | | | CATCH PITS | UNIT QTY | TOTAL (kg) | |
| | | | | 6 | 50 | 300 | |

Notes : Contractor should install expansion joint into vertical drainage pipe between superstructure and substructure.
The expansion joint should have a capability to relative displacement between superstructure and substructure in service state.

| PROJECT NAME | FINANCED BY | COUNTERPART | JICA STUDY TEAM |
|---|---|---|---|
| DETAILED DESIGN ON BAGO RIVER BRIDGE CONSTRUCTION PROJECT | JAPAN INTERNATIONAL COOPERATION AGENCY | REPUBLIC OF THE UNION OF MYANMAR MINISTRY OF CONSTRUCTION DEPARTMENT OF BRIDGE | NIPPON KOEI CO., LTD. ORIENTAL CONSULTANTS GLOBAL CO., LTD. METROPOLITAN EXPRESSWAY COMPANY LIMITED CHODAI CO.,LTD. NIPPON ENGINEERING CONSULTANTS CO.,LTD. |

| | NAME | SIGNATURE | DATE |
|---|---|---|---|
| PREPARED BY | M. OHYAMA | 大山満弘 | 15 Jun.2017 |
| CHECKED BY | T. HAYAKAWA | 早川知邦 | 20 Jun.2017 |
| APPROVED BY | Y. SANO | 佐野裕一 | 21 Jun.2017 |

| DRAWING TITLE | PACKAGE |
|---|---|
| DETAIL OF DRAINAGE FOR ON-RAMP (2) | 1 |
| | DWG No. |
| | P1-OR-3502 |

# TEMPORARY COFFERDAM
# (REFERENCE DRAWING)

S=1:300

## FRONT VIEW

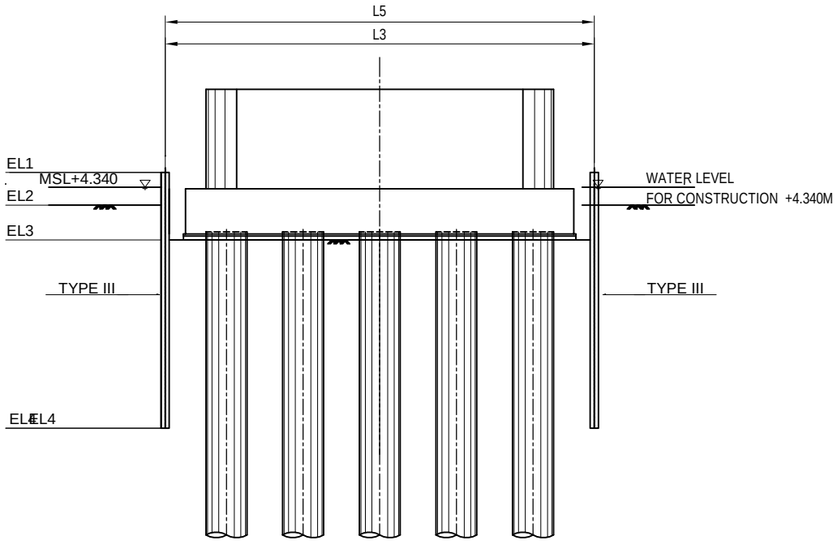


## SIDE VIEW

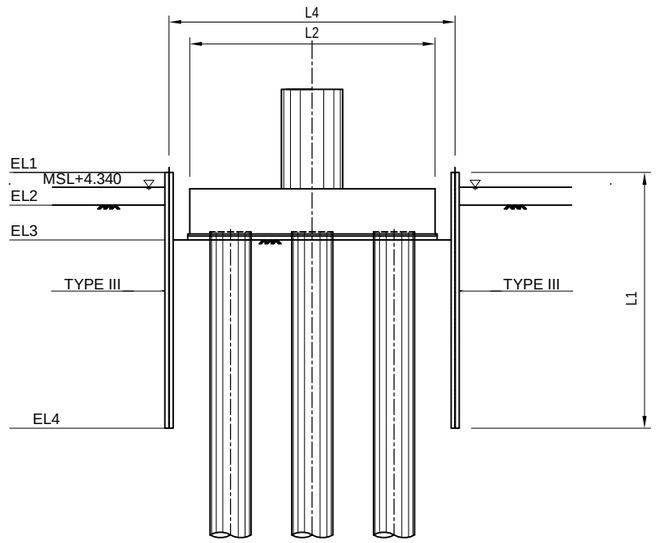


## PLAN

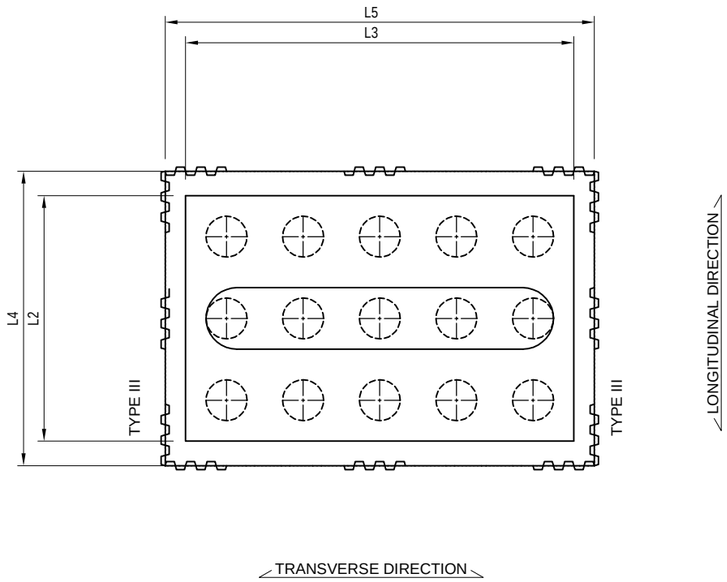


## QUANTITIES

| ITEM | | UNIT | SYMBOL | PO1 | PO2 | PO3 |
|---|---|---|---|---|---|---|
| COFFERDAM TYPE | | - | - | FS | FS | FS |
| SHEET PILE LENGTH | | M | L1 | 12.5 | 12.5 | 12.5 |
| SHEET PILE WIDTH | | M | W | 0.40 | 0.40 | 0.40 |
| SHEET PILE SHAPE | | - | - | III | III | III |
| SHEET PILE MATERIAL | | - | - | SY295 | SY295 | SY295 |
| UNIT WEIGHT | | KG/M | - | 60.0 | 60.0 | 60.0 |
| ASSUMED GROUND ELEVATION BEFORE EXCAVATION | | MSL+ M | EL2 | 3.300 | 3.300 | 3.300 |
| APPROXIMATE DESIGN FLOOR HEIGHT AFTER EXCAVATION | | MSL+ M | EL3 | 1.500 | 1.500 | 1.600 |
| TOP ELEVATION OF SHEET PILE | | MSL+ M | EL1 | 4.900 | 4.900 | 4.900 |
| TIP ELEVATION OF SHEET PILE | | MSL+ M | EL4 | -7.600 | -7.600 | -7.600 |
| PILE CAP DIMENSIONS | LONGITUDINAL | M | L2 | 10.400 | 8.000 | 8.000 |
| PILE CAP DIMENSIONS | TRANSVERSAL | M | L3 | 9.000 | 8.000 | 8.000 |
| SPACE BETWEEN PILE CAP AND COFFERDAM | | M | - | 1.0 | 1.0 | 1.0 |
| PLANAR DIMENSION OF COFFERDAM | LONGITUDINAL | M | L4 | 12.400 | 10.000 | 10.000 |
| PLANAR DIMENSION OF COFFERDAM | TRANSVERSAL | M | L5 | 11.000 | 10.000 | 10.000 |
| TOTAL LENGTH IN PLAN | | M | - | 46.800 | 40.000 | 40.000 |
| NUMBER OF SHEET PILE | | NOS | - | 117 | 100 | 100 |
| TOTAL WEIGHT OF SHEET PILE | | KG | - | 87,750 | 75,000 | 75,000 |

| PROJECT NAME | FINANCED BY | COUNTERPART | JICA STUDY TEAM |
|---|---|---|---|
| DETAILED DESIGN ON BAGO RIVER BRIDGE CONSTRUCTION PROJECT | JAPAN INTERNATIONAL COOPERATION AGENCY | REPUBLIC OF THE UNION OF MYANMAR MINISTRY OF CONSTRUCTION DEPARTMENT OF BRIDGE | NIPPON KOEI CO., LTD. ORIENTAL CONSULTANTS GLOBAL CO., LTD. METROPOLITAN EXPRESSWAY COMPANY LIMITED CHODAI CO.,LTD. NIPPON ENGINEERING CONSULTANTS CO.,LTD. |

| | NAME | SIGNATURE | DATE |
|---|---|---|---|
| PREPARED BY | M. OHYAMA | 大山満弘 | 15 Jun.2017 |
| CHECKED BY | T. HAYAKAWA | 早川和邦 | 20 Jun.2017 |
| APPROVED BY | Y. SANO | 佐野雅一 | 21 Jun.2017 |

| DRAWING TITLE | PACKAGE |
|---|---|
| TEMPORARY COFFERDAM (REFERENCE DRAWING) | 1 |
| | DWG No. |
| | P1-OR-4011 |

# QUANTITY TABLE OF SUPERSTRUCTURE AO1-PO3
# (REFERENCE DRAWING)

| Structure Component | Work Item | Specification | Unit | Quantity | Remark |
|---|---|---|---|---|---|
| Fabrication of PC girder | Concrete | 40Mpa | m3 | 234.2 | PC-I Girder, H=2.1m, Girder Length 28.6m, 73.3t/Girder, n=8 |
| | Metal form | Side & End Form | m2 | 1209.6 | |
| | | Bottom Form | m2 | 160.3 | |
| | PC strands | 12S12.7 | kg | 8424.5 | Longitudinal Tendon |
| | Steel re-bar | SD345, D13 | ton | 14.8 | |
| | | SD345, D16-D25 | ton | 18.6 | |
| PC pannel | PC pannel | 40MPa, t=100mm, L=2.680m | nos | 108 | |
| Crossbeam | Concrete | 30Mpa | m3 | 69.4 | |
| | Form | | m2 | 184.3 | |
| | PC bar | φ32 | kg | 2004.2 | Transverse PC bar for Crossbeam |
| | Steel re-bar | SD345, D13 | ton | 2.2 | |
| | | SD345, D16-D25 | ton | 3.8 | |
| Slab | Concrete | 30Mpa | m3 | 152.9 | |
| | Form | | m2 | 288.4 | |
| | Steel re-bar | SD345, D13 | ton | 4.5 | |
| | | SD345, D16-D25 | ton | 42.3 | |
| Bearing | Elastomeric Bearing (Pad type) | G10 | nos | 2 | 600mm x 400mm x 80mm(Σte) [A1] |
| | | G10 | nos | 12 | 600mm x 400mm x 60mm(Σte) [PO1~PO3] |
| | | G10 | nos | 2 | 600mm x 400mm x 100mm(Σte) [P5] |
| Anchor bar | | S35CN | kg | 576 | at AO1, PO1~PO3, P5 |
| Expansion joint | NL-70FL | 70mm | m | 5.25 | Expansion Joint for AO1 |
| Wheel guard | Concrete | 24Mpa | m3 | 55.4 | |
| | Form | | m2 | 184.6 | |
| | Steel re-bar | SD345, D13 | ton | 3.5 | |
| Adjustment concrete | | | m3 | 43.1 | |
| Waterproof | | | m2 | 601.3 | Spray Type |
| Drain pit | | | nos | 6 | |
| Drainage pipe | superstructure | VP200A | m | 75.8 | |
| | substructure | VP200A | m | 25.8 | |

| PROJECT NAME | FINANCED BY | COUNTERPART | JICA STUDY TEAM |
|---|---|---|---|
| DETAILED DESIGN ON BAGO RIVER BRIDGE CONSTRUCTION PROJECT | JAPAN INTERNATIONAL COOPERATION AGENCY | REPUBLIC OF THE UNION OF MYANMAR MINISTRY OF CONSTRUCTION DEPARTMENT OF BRIDGE | NIPPON KOEI CO., LTD. ORIENTAL CONSULTANTS GLOBAL CO., LTD. METROPOLITAN EXPRESSWAY COMPANY LIMITED CHODAI CO.,LTD. NIPPON ENGINEERING CONSULTANTS CO.,LTD. |

| | NAME | SIGNATURE | DATE |
|---|---|---|---|
| PREPARED BY | M. OHYAMA | 大山満弘 | 15 Jun.2017 |
| CHECKED BY | T. HAYAKAWA | 早川和邦 | 20 Jun.2017 |
| APPROVED BY | Y. SANO | 佐野裕一 | 21 Jun.2017 |

| DRAWING TITLE | PACKAGE |
|---|---|
| QUANTITY TABLE OF SUPERSTRUCTURE AO1-PO3 (REFERENCE DRAWING) | 1 |
| | DWG No. |
| | P1-OR-4101 |

# QUANTITY TABLE OF SUBSTRUCTURE AO1-PO3
# (REFERENCE DRAWING)

## QUANTITY OF RC STRUCTURES AO1-PO3 (ABUTMENT AND PIERS)

| Structure Component | Work Item | Specification | | Unit | Quantity: Total of AO1-PO3 | Remark |
|---|---|---|---|---|---|---|
| Pier Column, Beam and Pile Cap(Reinforced Concrete Structure) | Concrete | σck=30N/mm$^2$ | | m$^3$ | – | |
| | | σck=24N/mm$^2$ | | m$^3$ | 614.4 | |
| | Re-bar | SD345 | D 13 | kg | 281.0 | |
| | | | D16 ～ D25 | kg | 38,635.0 | |
| | | | D29 ～ D32 | kg | 25,665.0 | |
| | | | D 35 | kg | – | |
| | | | D 38 | kg | – | |
| | | | D 51 | kg | – | |
| | | | Total | kg | 64,581.0 | |
| | | SD390 | D29 ～ D32 | kg | – | |
| | | | D 38 | kg | – | |
| | Mechanical splice | SD345 | D 35 | Point | – | |
| | | | D 38 | Point | – | |
| | | | D 51 | Point | – | |
| | | | Total | Point | – | |
| | | SD390 | D 38 | Point | – | |

## QUANTITY OF CAST-IN-PLACE PILES AO1-PO3

| Structure Component | Work Item | Specification | Division | Unit | Package 1: Total of AO1-PO3 | Remark |
|---|---|---|---|---|---|---|
| Foundation Pile | Pile Diameter | CIP Pile | | m | 7.5 | |
| | Pile Number | Number | | nos. | 22.0 | |
| | Pile Length | Liner Meter | | m | 229.0 | |
| | Concrete | σck=30N/mm$^2$ | | m$^3$ | 3,245.6 | |
| | Re-bar | SD345 | D 13 | kg | 490.0 | |
| | | | D16 ～ D25 | kg | 115,348.0 | |
| | | | D29 ～ D32 | kg | 166,710.0 | |
| | | | D 35 | kg | – | |
| | | | D 38 | kg | – | |
| | | | D 51 | kg | – | |
| | | | PL | kg | 421.0 | |
| | | | Total | kg | 282,969.0 | |
| | Miscellaneous Steels | Steel Pipe (STK400), Plate (SS400) | | kg | 17,705.0 | |

| PROJECT NAME | FINANCED BY | COUNTERPART | JICA STUDY TEAM |
|---|---|---|---|
| DETAILED DESIGN ON BAGO RIVER BRIDGE CONSTRUCTION PROJECT | JAPAN INTERNATIONAL COOPERATION AGENCY | REPUBLIC OF THE UNION OF MYANMAR MINISTRY OF CONSTRUCTION DEPARTMENT OF BRIDGE | NIPPON KOEI CO., LTD. ORIENTAL CONSULTANTS GLOBAL CO., LTD. METROPOLITAN EXPRESSWAY COMPANY LIMITED CHODAI CO.,LTD. NIPPON ENGINEERING CONSULTANTS CO.,LTD. |

| | NAME | SIGNATURE | DATE |
|---|---|---|---|
| PREPARED BY | M. OHYAMA | | 15 Jun.2017 |
| CHECKED BY | T. HAYAKAWA | | 20 Jun.2017 |
| APPROVED BY | Y. SANO | | 21 Jun.2017 |

| DRAWING TITLE | PACKAGE |
|---|---|
| QUANTITY TABLE OF SUBSTRUCTURE AO1-PO3 (REFERENCE DRAWING) | 1 |
| | DWG No. |
| | P1-OR-4102 |

# G. LIGHTING

# TYPICAL POWER DISTRIBUTION PLAN

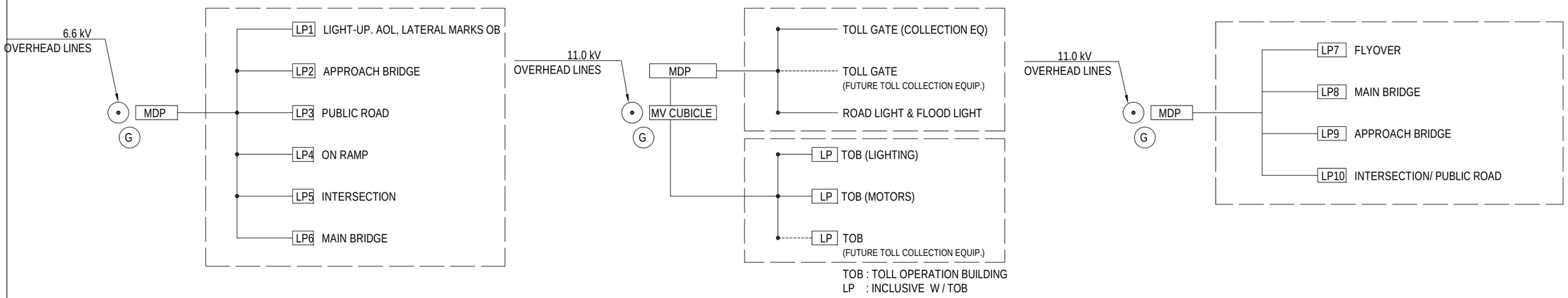


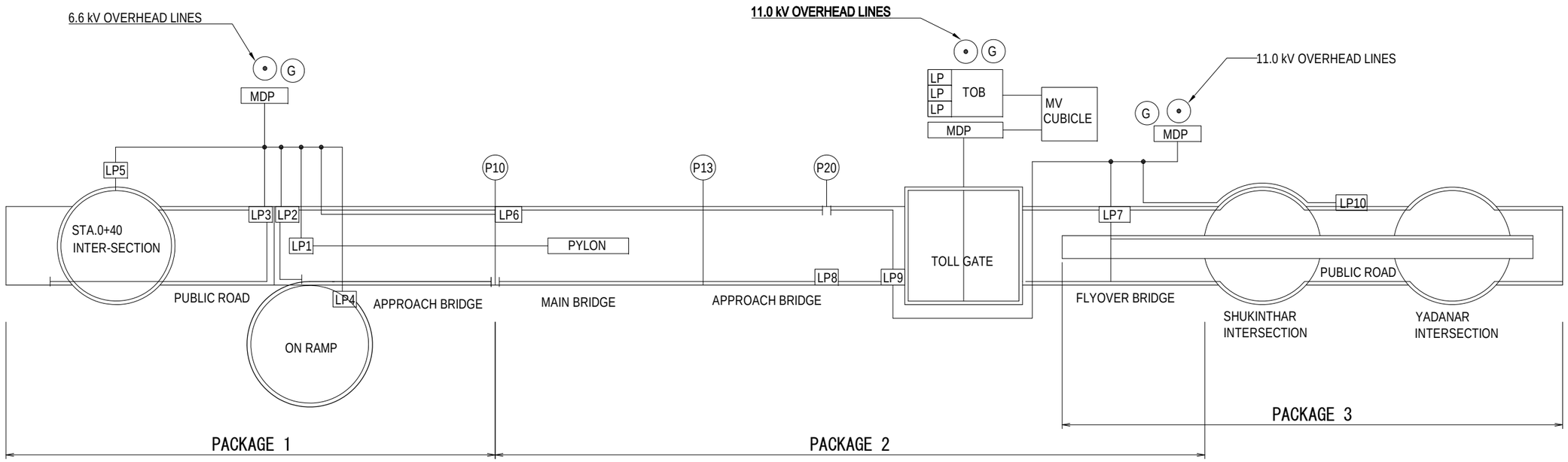


POWER DISTRIBUTION DIAGRAM

| PROJECT NAME | FINANCED BY | COUNTERPART | JICA STUDY TEAM | | NAME | SIGNATURE | DATE | DRAWING TITLE | PACKAGE |
|---|---|---|---|---|---|---|---|---|---|
| DETAILED DESIGN ON BAGO RIVER BRIDGE CONSTRUCTION PROJECT | JAPAN INTERNATIONAL COOPERATION AGENCY | REPUBLIC OF THE UNION OF MYANMAR MINISTRY OF CONSTRUCTION DEPARTMENT OF BRIDGE | NIPPON KOEI CO., LTD. ORIENTAL CONSULTANTS GLOBAL CO., LTD. METROPOLITAN EXPRESSWAY COMPANY LIMITED CHODAI CO.,LTD. NIPPON ENGINEERING CONSULTANTS CO.,LTD. | PREPARED BY | K . MORIMATA | | 29 Sep. 2017 | TYPICAL POWER DISTRIBUTION PLAN | 1 |
| | | | | CHECKED BY | T. HAYAKAWA | | 3 Oct. 2017 | | DWG No. |
| | | | | APPROVED BY | Y. SANO | | 6 Oct. 2017 | | P1-EL- 0001 |

# TYPICAL WIRING PLAN

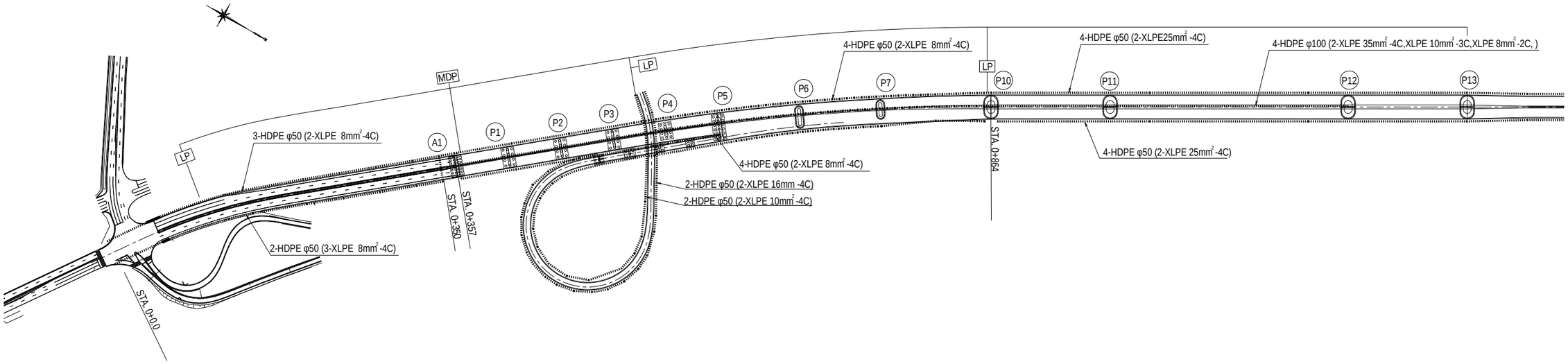


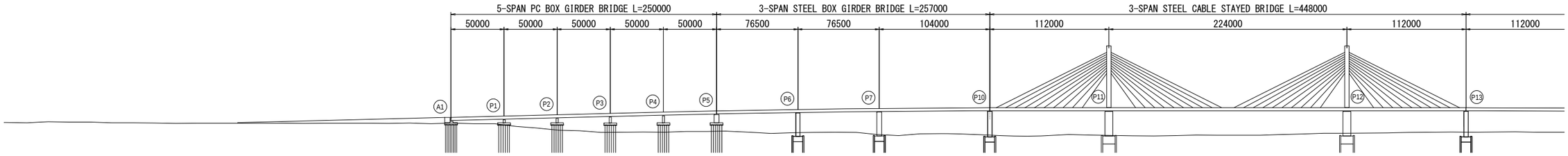


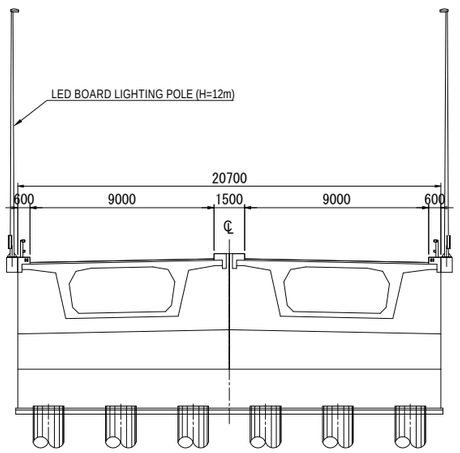


PC BOX GIRDER BRIDGE SECTION

NTS

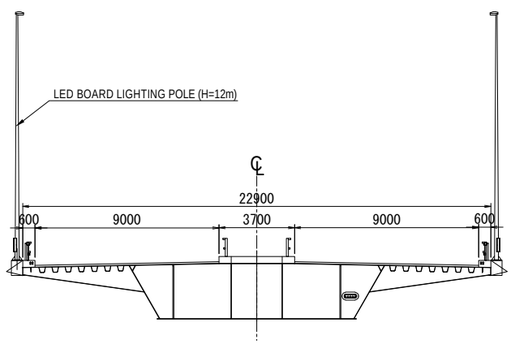


CABLE STAYED BRIDGE SECTION

NTS

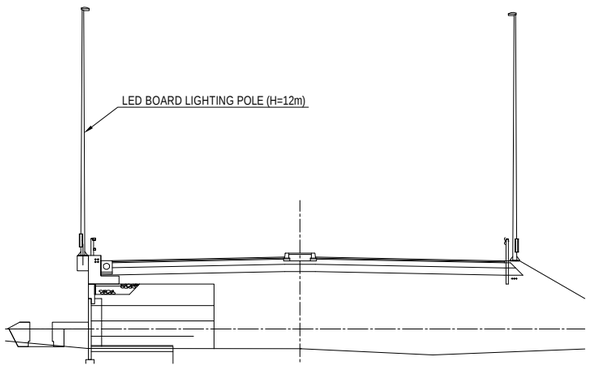


APPROACH ROAD SECTION

NTS

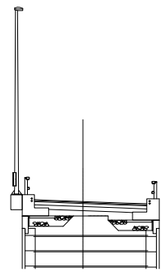

REINFORCED EARTH WALL

NTS

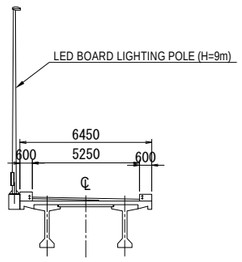


ON-RAMP SECTION

NTS

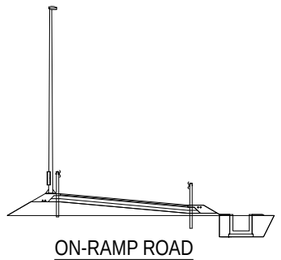

ON-RAMP ROAD

NTS

| PROJECT NAME | FINANCED BY | COUNTERPART | JICA STUDY TEAM |
|---|---|---|---|
| DETAILED DESIGN ON BAGO RIVER BRIDGE CONSTRUCTION PROJECT | JAPAN INTERNATIONAL COOPERATION AGENCY | REPUBLIC OF THE UNION OF MYANMAR MINISTRY OF CONSTRUCTION DEPARTMENT OF BRIDGE | NIPPON KOEI CO., LTD. ORIENTAL CONSULTANTS GLOBAL CO., LTD. METROPOLITAN EXPRESSWAY COMPANY LIMITED CHODAI CO.,LTD. NIPPON ENGINEERING CONSULTANTS CO.,LTD. |

| | NAME | SIGNATURE | DATE |
|---|---|---|---|
| PREPARED BY | K . MORIMATA | | 29 Sep. 2017 |
| CHECKED BY | T. HAYAKAWA | | 3 Oct. 2017 |
| APPROVED BY | Y. SANO | | 6 Oct. 2017 |

| DRAWING TITLE | PACKAGE |
|---|---|
| TYPICAL WIRING PLAN | 1 |
| | DWG No. |
| | P1-EL- 0002 |

# (REFERENCE) INCOMING POWER RECEIVING FOR ROAD LIGHTING

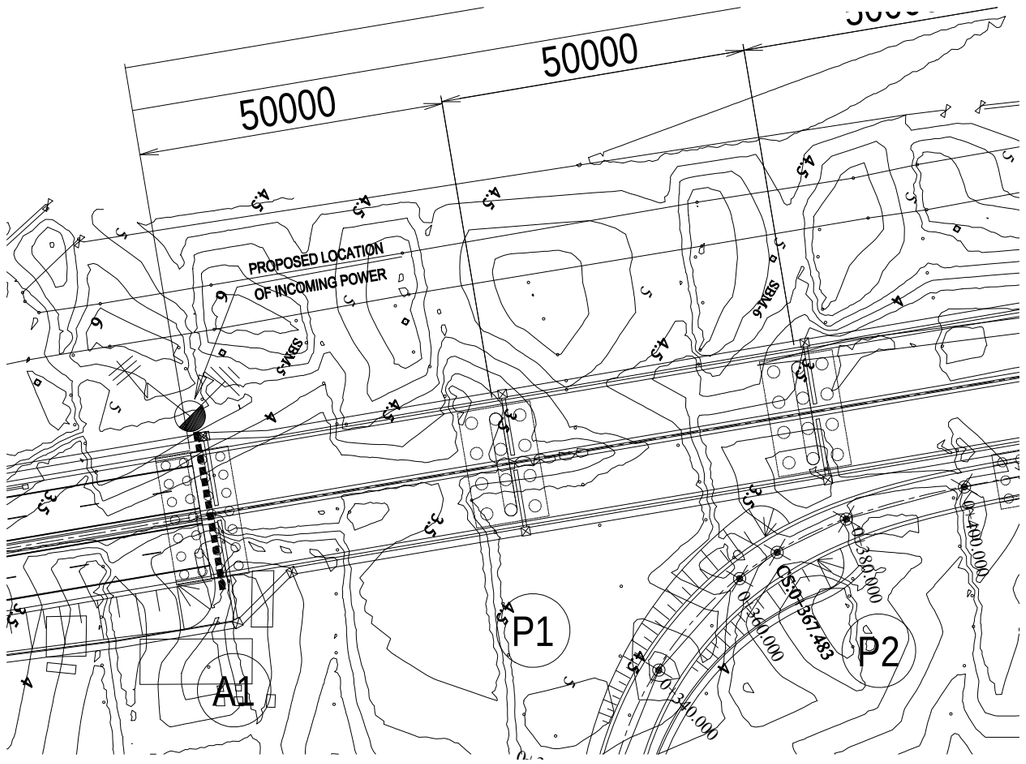


WIRING POSITION

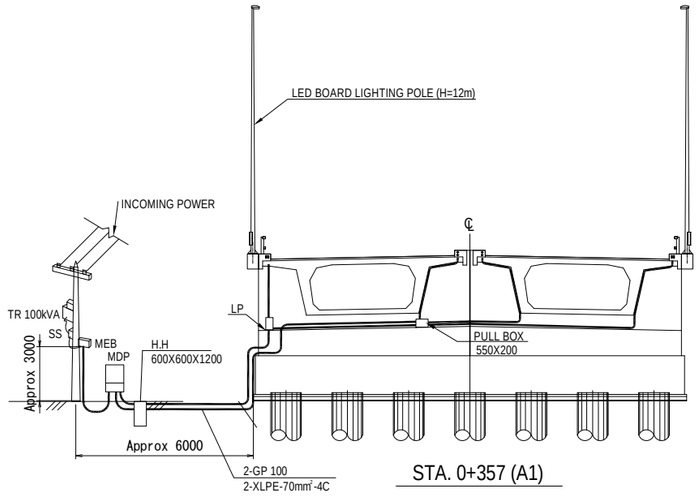


OUTLINE OF INCOMING POWER RECEIVING
(REFERENCE)

OUTLINE OF INCOMING POWER RECEIVING

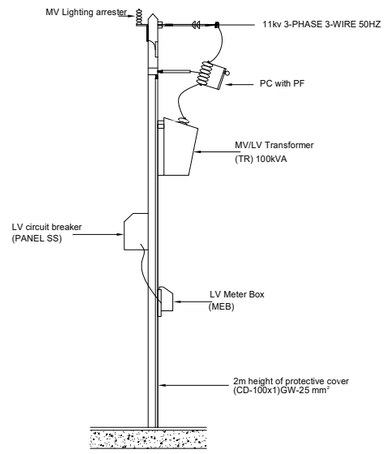


CABLE STAYED BRIDGE CROSS SECTION

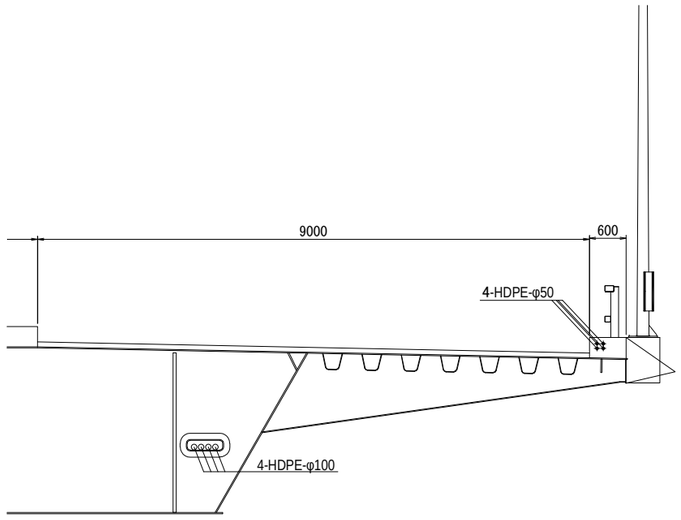


CONCRETE KERB BARRIER AND MEDIAN

PCBOX GIRDER AND STEEL BOX GIRDER

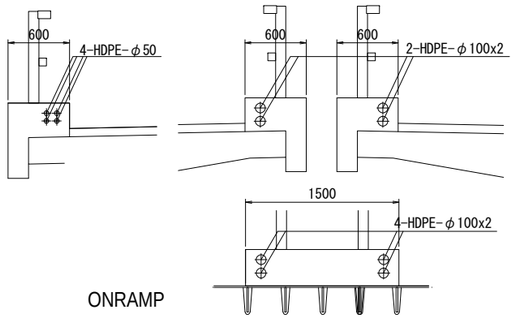


ONRAMP

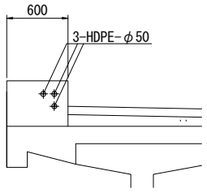


NOTE: Main Distribution Panel should be installed above the high water level (H.W.L) of 4.99 (M.S.L).

| PROJECT NAME | FINANCED BY | COUNTERPART | JICA STUDY TEAM | | NAME | SIGNATURE | DATE | DRAWING TITLE | PACKAGE |
|---|---|---|---|---|---|---|---|---|---|
| DETAILED DESIGN ON BAGO RIVER BRIDGE CONSTRUCTION PROJECT | JAPAN INTERNATIONAL COOPERATION AGENCY | REPUBLIC OF THE UNION OF MYANMAR MINISTRY OF CONSTRUCTION DEPARTMENT OF BRIDGE | NIPPON KOEI CO., LTD. ORIENTAL CONSULTANTS GLOBAL CO., LTD. METROPOLITAN EXPRESSWAY COMPANY LIMITED CHODAI CO.,LTD. NIPPON ENGINEERING CONSULTANTS CO.,LTD. | PREPARED BY | T. HAYAKAWA K . MORIMATA | | 29 Sep. 2017 | (REFERENCE) INCOMING POWER RECEIVING FOR ROAD LIGHTING | 1 |
| | | | | CHECKED BY | T. HAYAKAWA | | 3 Oct. 2017 | | DWG No. |
| | | | | APPROVED BY | Y. SANO | | 6 Oct. 2017 | | P1-EL- 0003 |

# TYPICAL MV SITE SUBSTATION

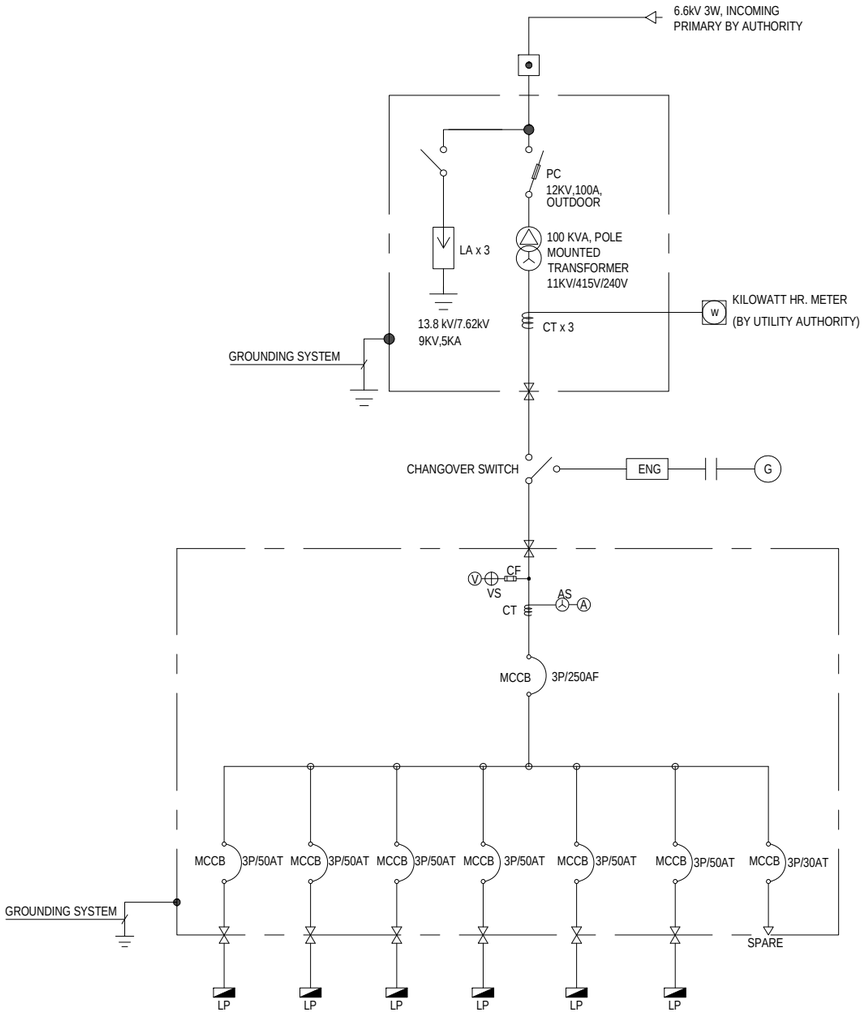


## SINGLE LINE DIAGRAM

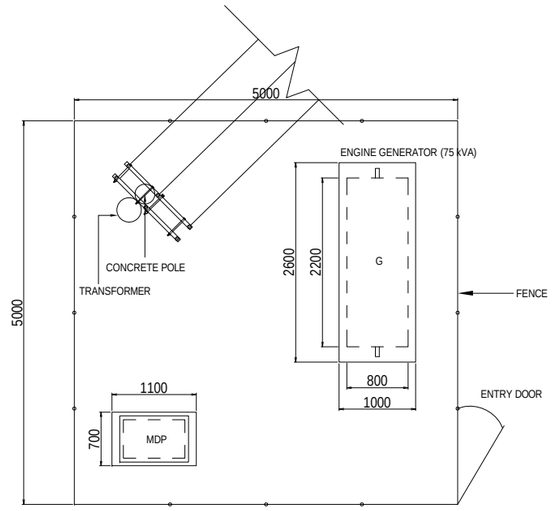


## SITE LAYOUT OF INCOMING POWER STATION S=1:80

LEGEND

- LIGHTING PANEL
- MOLD-CASE CIRCUIT BREAKER (MCCB)
- GROUNDING
- KILOWATT HR.METER
- POWER TRANSFORMER
- PRIMARY CUTOUT (PC) WITH POWER FUSE (PF)
- LIGHTING ARRESTER (LA)
- GENERATOR
- ENGINE
- AS - AMMETER CHANGE OVER SWITCH
- CF - CURRENT FUSE
- VS - VOLTAGE CHANGE OVER SWITCH
- CT - CURRENT TRANSFORMER
- MDP - MAIN DISTRIBUTION PANEL
- PF - POWER FUSE

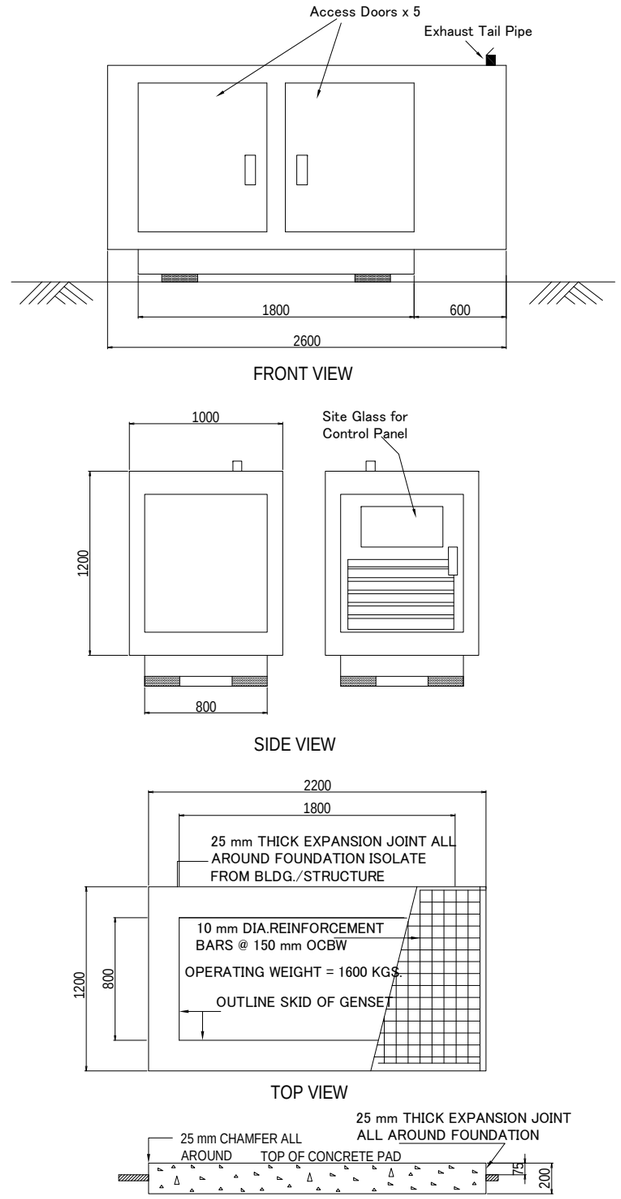


## REFERENCE LAYOUT OF ENGINE GENERATOR S=1:40

| PROJECT NAME | FINANCED BY | COUNTERPART | JICA STUDY TEAM |
|---|---|---|---|
| DETAILED DESIGN ON BAGO RIVER BRIDGE CONSTRUCTION PROJECT | JAPAN INTERNATIONAL COOPERATION AGENCY | REPUBLIC OF THE UNION OF MYANMAR MINISTRY OF CONSTRUCTION DEPARTMENT OF BRIDGE | NIPPON KOEI CO., LTD. ORIENTAL CONSULTANTS GLOBAL CO., LTD. METROPOLITAN EXPRESSWAY COMPANY LIMITED CHODAI CO.,LTD. NIPPON ENGINEERING CONSULTANTS CO.,LTD. |

| | NAME | SIGNATURE | DATE |
|---|---|---|---|
| PREPARED BY | K . MORIMATA | | 29 Sep. 2017 |
| CHECKED BY | T. HAYAKAWA | | 3 Oct. 2017 |
| APPROVED BY | Y. SANO | | 6 Oct. 2017 |

| DRAWING TITLE | PACKAGE |
|---|---|
| TYPICAL MV SITE SUBSTATION | 1 |
| | DWG No. |
| | P1-EL- 0004 |

# TYPICAL ELECTRIC POLE ASSEMBLING
# (6.6kv)

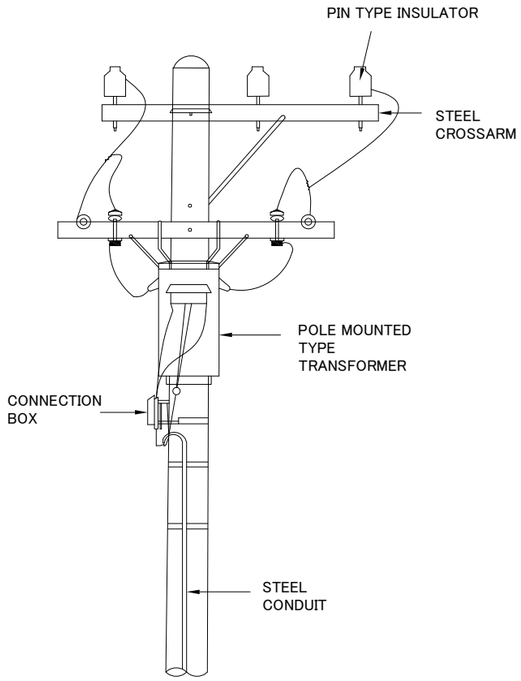


TYPICAL POLE ASSEMBLING FOR POLE MOUNTED TRANSFORMER

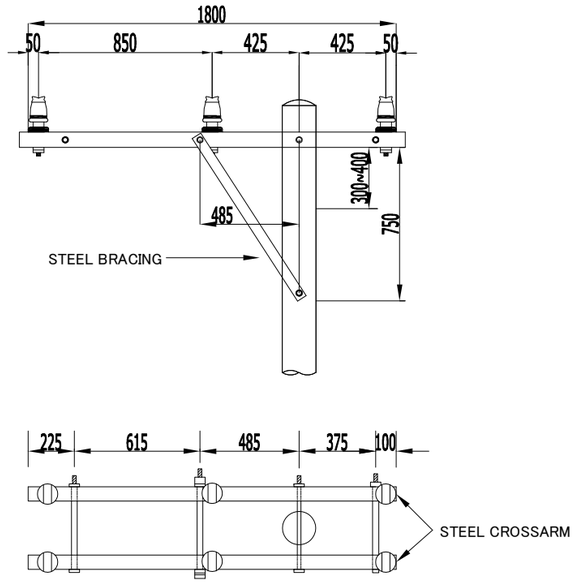


TYPICAL POLE ASSEMBLING FOR EXTENDED OVERHEAD LINES

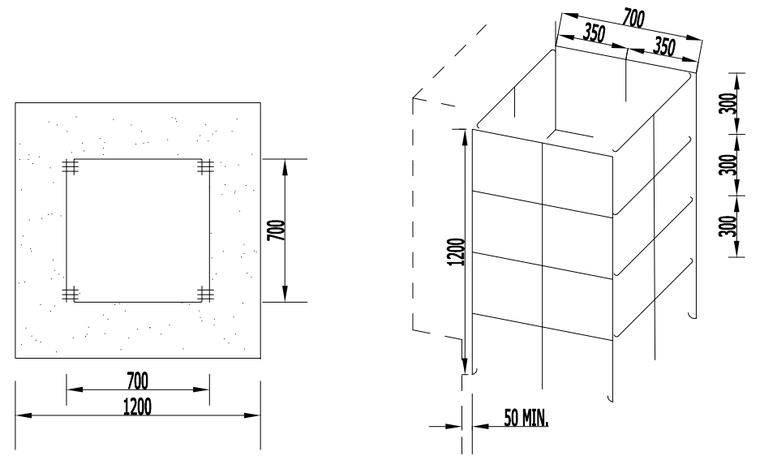


NOTE : REINFORCEMENT BAR WITH MORE THAN 10MM DIA. SHALL BE ARRANGED.

TYPICAL CONCRETE FOUNDATION AND RE-BAR ARRANGEMENT

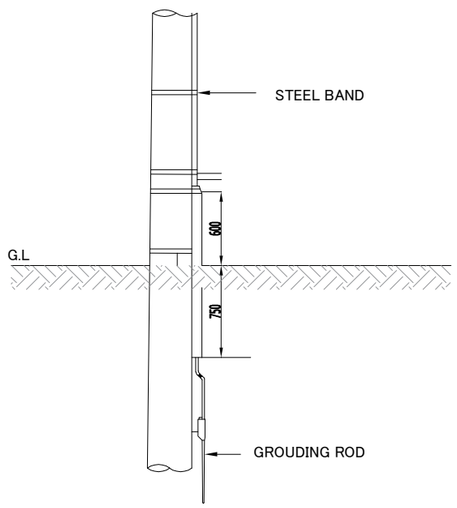


TYPICAL GROUNDING SYSTEM

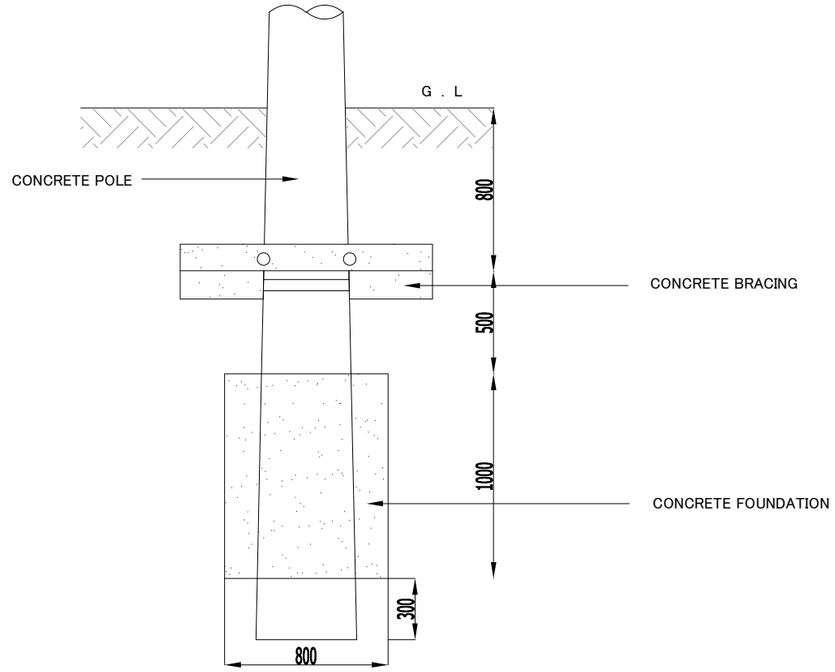


TYPICAL POLE CONCRETE BRACING

| PROJECT NAME | FINANCED BY | COUNTERPART | JICA STUDY TEAM |
|---|---|---|---|
| DETAILED DESIGN ON BAGO RIVER BRIDGE CONSTRUCTION PROJECT | JAPAN INTERNATIONAL COOPERATION AGENCY | REPUBLIC OF THE UNION OF MYANMAR MINISTRY OF CONSTRUCTION DEPARTMENT OF BRIDGE | NIPPON KOEI CO., LTD. ORIENTAL CONSULTANTS GLOBAL CO., LTD. METROPOLITAN EXPRESSWAY COMPANY LIMITED CHODAI CO.,LTD. NIPPON ENGINEERING CONSULTANTS CO.,LTD. |

| | NAME | SIGNATURE | DATE |
|---|---|---|---|
| PREPARED BY | K . MORIMATA | | 29 Sep. 2017 |
| CHECKED BY | T. HAYAKAWA | | 3 Oct. 2017 |
| APPROVED BY | Y. SANO | | 6 Oct. 2017 |

| DRAWING TITLE | PACKAGE |
|---|---|
| TYPICAL ELECTRIC POLE ASSEMBLING | 1 |
| | DWG No. |
| | P1-EL- 0005 |

# TYPICAL LIGHTING PLAN FOR RETAINING WALL APPROACH (THANLYIN SIDE)

## LEGEND:

- ROAD LIGHTING POLE 140(W) 12m HEIGHT
- WARNING LIGHTS, 200 (W)
- LIGHTING PANEL
- GROUNDING

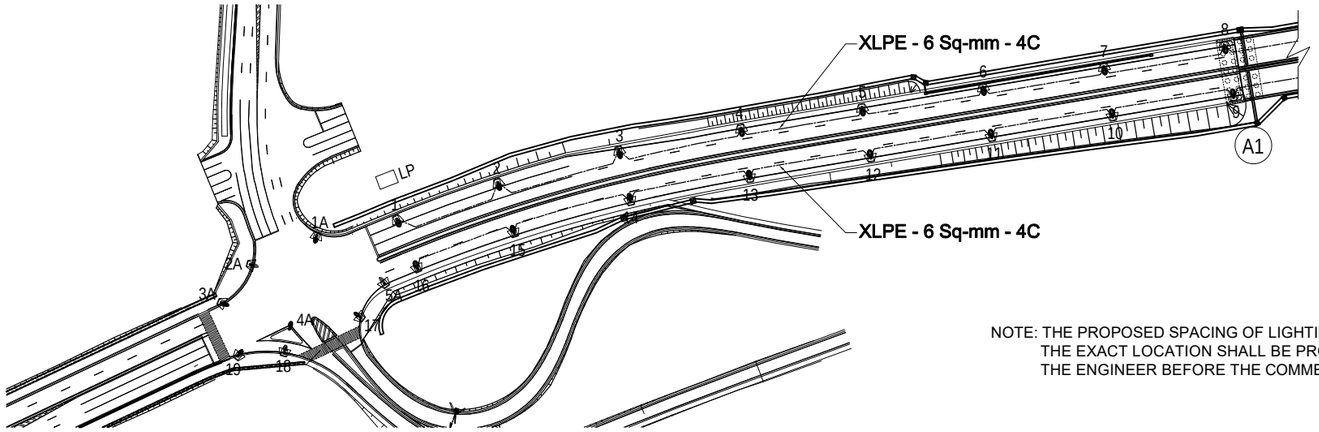


NOTE: THE PROPOSED SPACING OF LIGHTING POLE IS 40M AT THE DESIGN STAGE.
THE EXACT LOCATION SHALL BE PROPOSED BY THE CONTRACTOR AND APPROVED BY
THE ENGINEER BEFORE THE COMMENCEMENT OF INSTALLATION

## LIGHTING PLAN FOR RETAINING WALL APPROACH (THANLYIN SIDE)

NTS

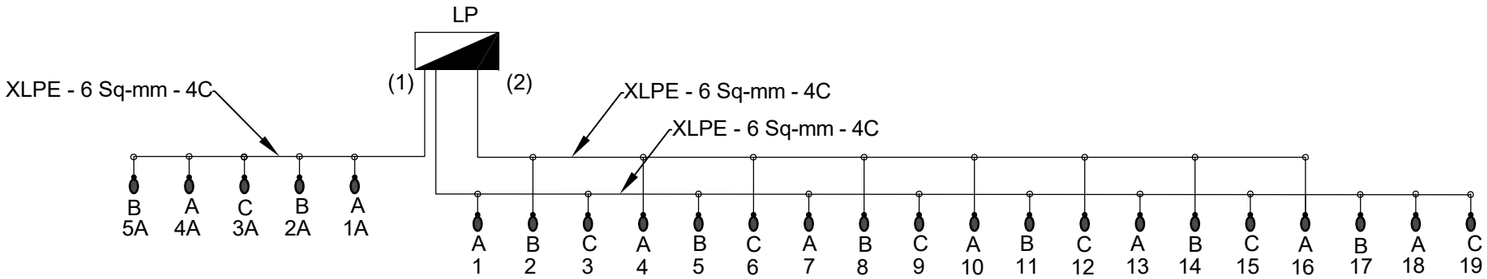


## WIRING DIAGRAM

CKT = LP (1)

| DESCRIPTION | CONNECTED LOAD (VA) | | | | CIRCUIT BREAKER | | |
|---|---|---|---|---|---|---|---|
| | TOTAL | A | B | C | P | AF | AT |
| RETAINING WALL APPROACH | 165 | 165 | | | 1 | 25 | 15 |
| | 165 | | | 165 | 1 | | |
| | 165 | | 165 | | 1 | | |
| | 165 | 165 | | | 1 | | |
| | 165 | | | 165 | 1 | | |
| | 165 | | 165 | | 1 | | |
| | 165 | 165 | | | 1 | | |
| | 165 | | | 165 | 1 | | |
| | 165 | | 165 | | 1 | | |
| | 165 | 165 | | | 1 | | |
| RETAINING WALL APPROACH | 165 | | | 165 | 1 | | |
| INTERSECTION | 177 | 177 | | | 1 | | |
| | 177 | | 177 | | 1 | | |
| | 177 | | | 177 | 1 | | |
| | 177 | 177 | | | 1 | | |
| | 177 | | 177 | | 1 | | |
| SPARE | 1000 | | | | 3 | | |
| SPARE | | | | | | | |
| SUBTOTAL | 3,700 | 1,014 | 849 | 837 | | 25 | 15 |

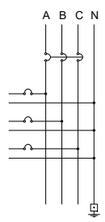


CKT = LP (2)

| DESCRIPTION | CONNECTED LOAD (VA) | | | | CIRCUIT BREAKER | | |
|---|---|---|---|---|---|---|---|
| | TOTAL | A | B | C | P | AF | AT |
| RETAINING WALL APPROACH | 165 | | 165 | | 1 | 25 | 15 |
| | 165 | 165 | | | 1 | | |
| | 165 | | | 165 | 1 | | |
| | 165 | | 165 | | 1 | | |
| | 165 | 165 | | | 1 | | |
| | 165 | | | 165 | 1 | | |
| | 165 | | 165 | | 1 | | |
| RETAINING WALL APPROACH | 165 | 165 | | | 1 | | |
| SPARE | 1000 | | | | 3 | | |
| SPARE | | | | | | | |
| SUBTOTAL | 2320 | 495 | 495 | 330 | | 25 | 15 |

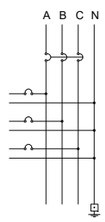


## LOAD SCHEDULE

| PROJECT NAME | FINANCED BY | COUNTERPART | JICA STUDY TEAM |
|---|---|---|---|
| DETAILED DESIGN ON BAGO RIVER BRIDGE CONSTRUCTION PROJECT | JAPAN INTERNATIONAL COOPERATION AGENCY | REPUBLIC OF THE UNION OF MYANMAR MINISTRY OF CONSTRUCTION DEPARTMENT OF BRIDGE | NIPPON KOEI CO., LTD. ORIENTAL CONSULTANTS GLOBAL CO., LTD. METROPOLITAN EXPRESSWAY COMPANY LIMITED CHODAI CO.,LTD. NIPPON ENGINEERING CONSULTANTS CO.,LTD. |

| | NAME | SIGNATURE | DATE |
|---|---|---|---|
| PREPARED BY | K . MORIMATA | | 29 Sep. 2017 |
| CHECKED BY | T. HAYAKAWA | | 3 Oct. 2017 |
| APPROVED BY | Y. SANO | | 6 Oct. 2017 |

| DRAWING TITLE | PACKAGE |
|---|---|
| TYPICAL LIGHTING PLAN FOR RETAINING WALL APPROACH (THANLYIN SIDE) | 1 |
| | DWG No. |
| | P1-EL- 0006 |

# TYPICAL LIGHTING PLAN FOR PC BOX GIRDER AND STEEL BOX GIRDER BRIDGE (THANLYIN SIDE)

## LEGEND:

- ROAD LIGHTING POLE 140(W) 12m HEIGHT
- WARNING LIGHTS, 200 (W)
- LIGHTING PANEL
- GROUNDING

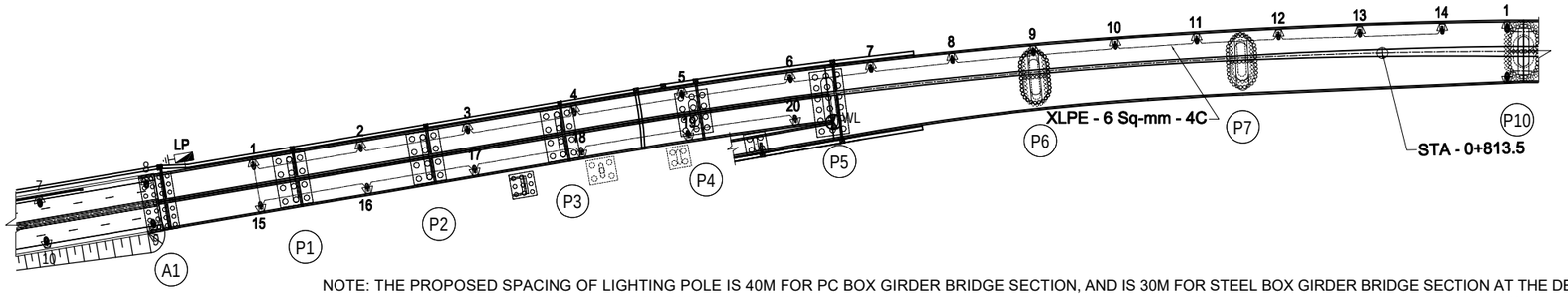


NOTE: THE PROPOSED SPACING OF LIGHTING POLE IS 40M FOR PC BOX GIRDER BRIDGE SECTION, AND IS 30M FOR STEEL BOX GIRDER BRIDGE SECTION AT THE DESIGN STAGE.
THE EXACT LOCATION SHALL BE PROPOSED BY THE CONTRACTOR AND APPROVED BY THE ENGINEER BEFORE THE COMMENCEMENT OF INSTALLATION

## LIGHTING PLAN FOR PC BOX GIRDER AND STEEL BOX GIRDER (THANLYIN SIDE)

NTS

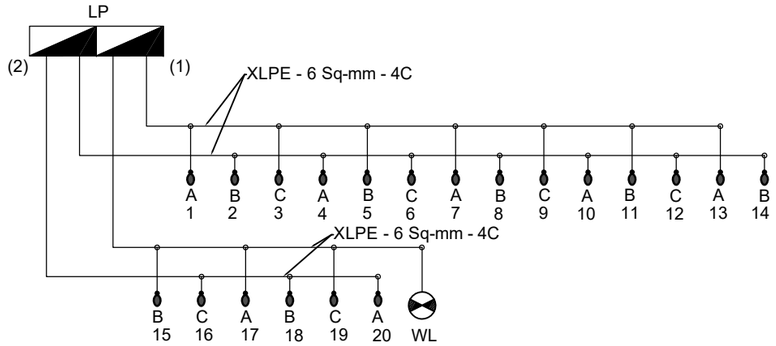


## WIRING DIAGRAM

CKT = LP (1)

| DESCRIPTION | CONNECTED LOAD (VA) | | | | CIRCUIT BREAKER | | |
|---|---|---|---|---|---|---|---|
| | TOTAL | A | B | C | P | AF | AT |
| Approach Bridge | 165 | 165 | | | 1 | 25 | 15 |
| | 165 | | | 165 | 1 | | |
| | 165 | | 165 | | 1 | | |
| | 165 | 165 | | | 1 | | |
| | 165 | | | 165 | 1 | | |
| | 165 | | 165 | | 1 | | |
| | 165 | 165 | | | 1 | | |
| | 165 | | 165 | | 1 | | |
| | 165 | 165 | | | 1 | | |
| Approach Bridge | 165 | | | 165 | 1 | | |
| Warning Light | 200 | 200 | | | | | |
| SPARE | 1000 | | | | 3 | | |
| SPARE | | | | | | | |
| SUBTOTAL | 2850 | 860 | 495 | 495 | | 25 | 15 |

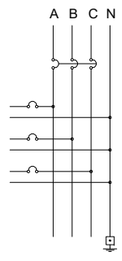


CKT = LP (2)

| DESCRIPTION | CONNECTED LOAD (VA) | | | | CIRCUIT BREAKER | | |
|---|---|---|---|---|---|---|---|
| | TOTAL | A | B | C | P | AF | AT |
| Approach Bridge | 165 | | 165 | | 1 | 25 | 15 |
| | 165 | 165 | | | 1 | | |
| | 165 | | | 165 | 1 | | |
| | 165 | | 165 | | 1 | | |
| | 165 | 165 | | | 1 | | |
| | 165 | | | 165 | 1 | | |
| | 165 | | 165 | | 1 | | |
| | 165 | | | 165 | 1 | | |
| | 165 | | 165 | | 1 | | |
| Approach Bridge | 165 | 165 | | | | | |
| SPARE | 1000 | | | | 3 | | |
| SPARE | 2650 | 495 | 660 | 495 | | 25 | 15 |
| SUBTOTAL | | | | | | | |

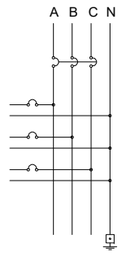


## LOAD SCHEDULE

| PROJECT NAME | FINANCED BY | COUNTERPART | JICA STUDY TEAM |
|---|---|---|---|
| DETAILED DESIGN ON BAGO RIVER BRIDGE CONSTRUCTION PROJECT | JAPAN INTERNATIONAL COOPERATION AGENCY | REPUBLIC OF THE UNION OF MYANMAR MINISTRY OF CONSTRUCTION DEPARTMENT OF BRIDGE | NIPPON KOEI CO., LTD. ORIENTAL CONSULTANTS GLOBAL CO., LTD. METROPOLITAN EXPRESSWAY COMPANY LIMITED CHODAI CO.,LTD. NIPPON ENGINEERING CONSULTANTS CO.,LTD. |

| | NAME | SIGNATURE | DATE |
|---|---|---|---|
| PREPARED BY | K . MORIMATA | | 29 Sep. 2017 |
| CHECKED BY | T. HAYAKAWA | | 3 Oct. 2017 |
| APPROVED BY | Y. SANO | | 6 Oct. 2017 |

| DRAWING TITLE | PACKAGE |
|---|---|
| TYPICAL LIGHTING PLAN FOR PC BOX GIRDER AND STEEL BOX GIRDER (THANLYIN SIDE) | 1 |
| | DWG No. |
| | P1-EL- 0007 |

# TYPICAL LIGHTING PLAN FOR CABLE-STAYED BRIDGE (1)

## LEGEND:

- ROAD LIGHTING POLE 140(W) 12m HEIGHT
- WARNING LIGHTS, 200 (W)
- LIGHTING PANEL
- GROUNDING

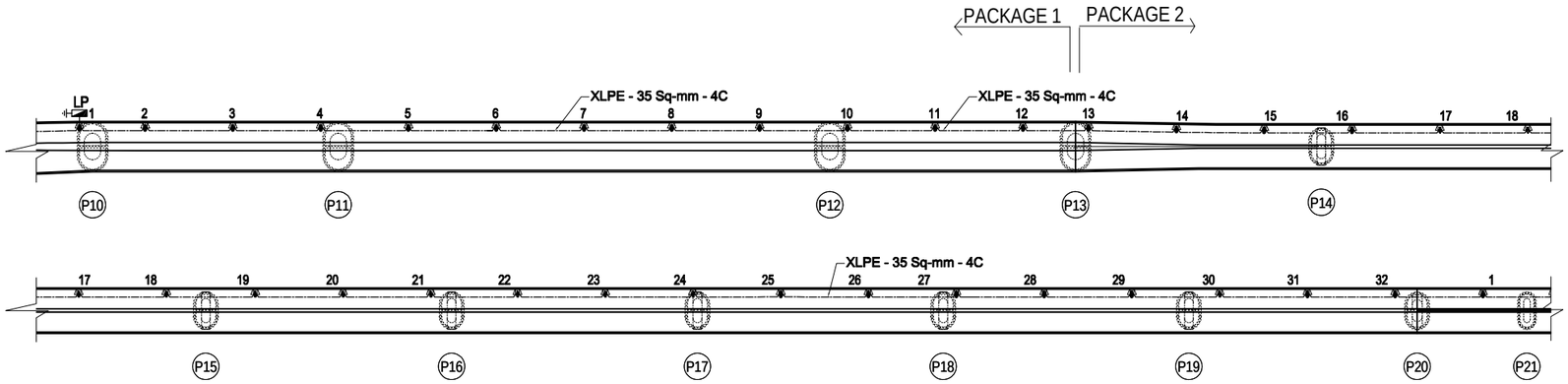


NOTE: THE PROPOSED SPACING OF LIGHTING POLE IS 40M AT THE DESIGN STAGE.
THE EXACT LOCATION SHALL BE PROPOSED BY THE CONTRACTOR AND APPROVED BY THE ENGINEER BEFORE THE COMMENCEMENT OF INSTALLATION

## LIGHTING PLAN FOR CABLE-STAYED BRIDGE (THANLYIN SIDE)

NTS

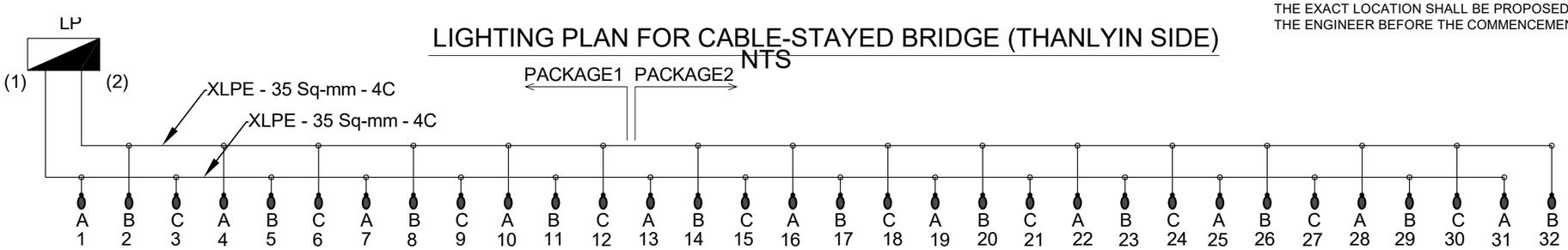


## WIRING DIAGRAM

CKT = LP (1)

| DESCRIPTION | CONNECTED LOAD (VA) | | | | CIRCUIT BREAKER | | |
|---|---|---|---|---|---|---|---|
| | TOTAL | A | B | C | P | AF | AT |
| Main Road | 165 | 165 | | | 1 | 30 | 20 |
| | 165 | | | 165 | 1 | | |
| | 165 | | 165 | | 1 | | |
| | 165 | 165 | | | 1 | | |
| | 165 | | | 165 | 1 | | |
| | 165 | | 165 | | 1 | | |
| | 165 | 165 | | | 1 | | |
| | 165 | | | 165 | 1 | | |
| | 165 | | 165 | | 1 | | |
| | 165 | 165 | | | 1 | | |
| | 165 | | | 165 | 1 | | |
| | 165 | | 165 | | 1 | | |
| | 165 | 165 | | | 1 | | |
| | 165 | | | 165 | 1 | | |
| | 165 | | 165 | | 1 | | |
| Main Road | 165 | 165 | | | 1 | | |
| SPARE | 1000 | | | | 3 | | |
| SPARE | | | | | | | |
| SUBTOTAL | 3640 | 990 | 825 | 825 | | 30 | 20 |

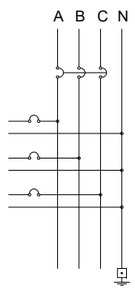


CKT = LP (2)

| DESCRIPTION | CONNECTED LOAD (VA) | | | | CIRCUIT BREAKER | | |
|---|---|---|---|---|---|---|---|
| | TOTAL | A | B | C | P | AF | AT |
| Main Road | 165 | | 165 | | 1 | 30 | 20 |
| | 165 | 165 | | | 1 | | |
| | 165 | | | 165 | 1 | | |
| | 165 | | 165 | | 1 | | |
| | 165 | 165 | | | 1 | | |
| | 165 | | | 165 | 1 | | |
| | 165 | | 165 | | 1 | | |
| | 165 | 165 | | | 1 | | |
| | 165 | | | 165 | 1 | | |
| | 165 | | 165 | | 1 | | |
| | 165 | 165 | | | 1 | | |
| | 165 | | | 165 | 1 | | |
| | 165 | | 165 | | 1 | | |
| | 165 | 165 | | | 1 | | |
| | 165 | | | 165 | 1 | | |
| Main Road | 165 | | 165 | | 1 | | |
| SPARE | 1000 | | | | 3 | | |
| SPARE | | | | | | | |
| SUBTOTAL | 3640 | 825 | 990 | 825 | | 30 | 20 |

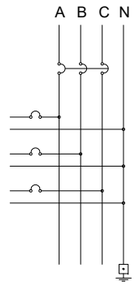


## LOAD SCHEDULE

| PROJECT NAME | FINANCED BY | COUNTERPART | JICA STUDY TEAM |
|---|---|---|---|
| DETAILED DESIGN ON BAGO RIVER BRIDGE CONSTRUCTION PROJECT | JAPAN INTERNATIONAL COOPERATION AGENCY | REPUBLIC OF THE UNION OF MYANMAR MINISTRY OF CONSTRUCTION DEPARTMENT OF BRIDGE | NIPPON KOEI CO., LTD. ORIENTAL CONSULTANTS GLOBAL CO., LTD. METROPOLITAN EXPRESSWAY COMPANY LIMITED CHODAI CO.,LTD. NIPPON ENGINEERING CONSULTANTS CO.,LTD. |

| | NAME | SIGNATURE | DATE |
|---|---|---|---|
| PREPARED BY | K . MORIMATA | | 29 Sep. 2017 |
| CHECKED BY | T. HAYAKAWA | | 3 Oct. 2017 |
| APPROVED BY | Y. SANO | | 6 Oct. 2017 |

| DRAWING TITLE | PACKAGE |
|---|---|
| TYPICAL LIGHTING PLAN FOR CABLE-STAYED BRIDGE(1) | 1 |
| | DWG No. |
| | P1-EL- 0008 |

# TYPICAL LIGHTING PLAN FOR CABLE-STAYED BRIDGE (2)

## LEGEND:

- ROAD LIGHTING POLE 140(W) 12m HEIGHT
- WARNING LIGHTS, 200 (W)
- LIGHTING PANEL
- GROUNDING

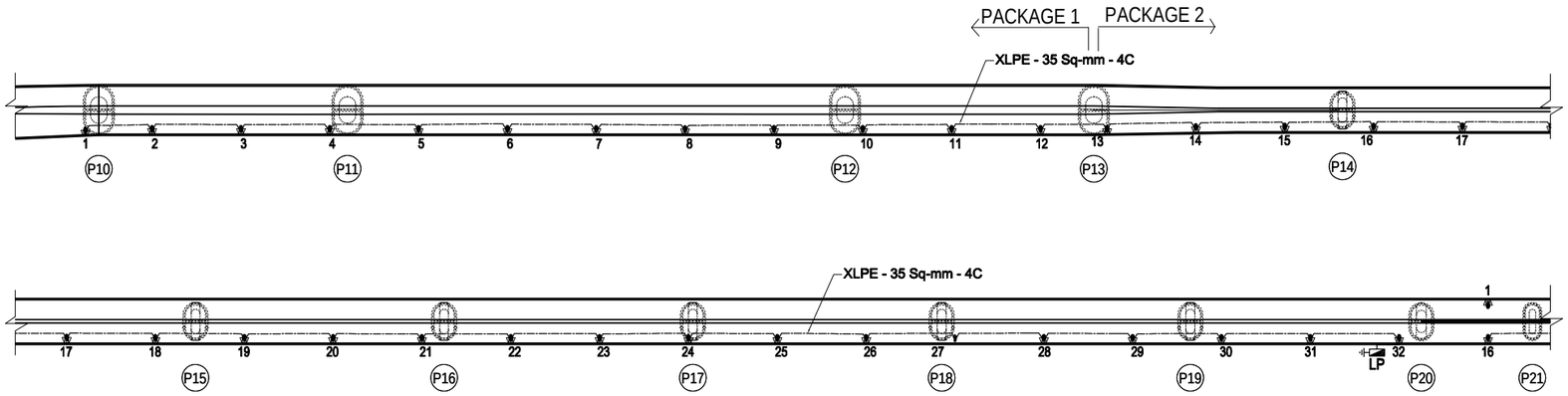


NOTE: THE PROPOSED SPACING OF LIGHTING POLE IS 40M AT THE DESIGN STAGE.
THE EXACT LOCATION SHALL BE PROPOSED BY THE CONTRACTOR AND APPROVED BY
THE ENGINEER BEFORE THE COMMENCEMENT OF INSTALLATION

## LIGHTING PLAN FOR CABLE STAYED BRIDGE (THANLYIN SIDE)

NTS

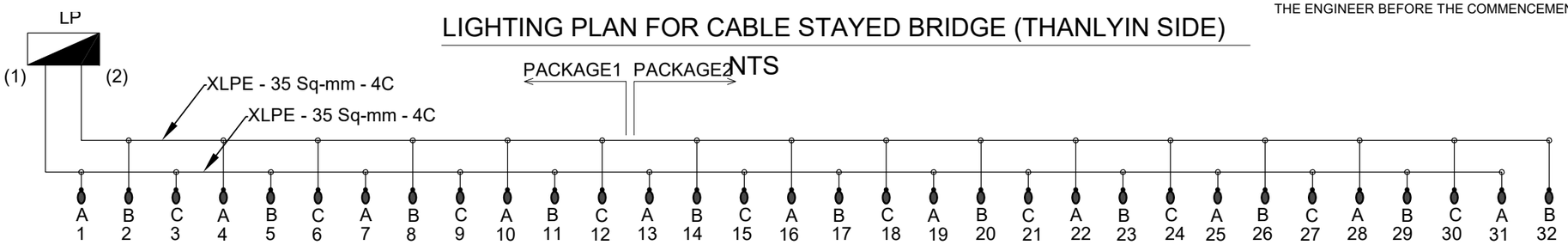


## WIRING DIAGRAM

CKT = LP (1)

| DESCRIPTION | CONNECTED LOAD (VA) | | | | CIRCUIT BREAKER | | |
|---|---|---|---|---|---|---|---|
| | TOTAL | A | B | C | P | AF | AT |
| Main Road | 165 | 165 | | | 1 | 30 | 20 |
| | 165 | | | 165 | 1 | | |
| | 165 | | 165 | | 1 | | |
| | 165 | 165 | | | 1 | | |
| | 165 | | | 165 | 1 | | |
| | 165 | | 165 | | 1 | | |
| | 165 | 165 | | | 1 | | |
| | 165 | | | 165 | 1 | | |
| | 165 | | 165 | | 1 | | |
| | 165 | 165 | | | 1 | | |
| | 165 | | | 165 | 1 | | |
| | 165 | | 165 | | 1 | | |
| | 165 | 165 | | | 1 | | |
| | 165 | | | 165 | 1 | | |
| | 165 | | 165 | | 1 | | |
| Main Road | 165 | 165 | | | 1 | | |
| SPARE | 1000 | | | | 3 | | |
| SPARE | | | | | | | |
| SUBTOTAL | 3640 | 990 | 825 | 825 | | 30 | 20 |

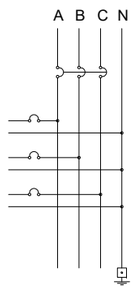


CKT = LP (2)

| DESCRIPTION | CONNECTED LOAD (VA) | | | | CIRCUIT BREAKER | | |
|---|---|---|---|---|---|---|---|
| | TOTAL | A | B | C | P | AF | AT |
| Main Road | 165 | | 165 | | 1 | 30 | 20 |
| | 165 | 165 | | | 1 | | |
| | 165 | | | 165 | 1 | | |
| | 165 | | 165 | | 1 | | |
| | 165 | 165 | | | 1 | | |
| | 165 | | | 165 | 1 | | |
| | 165 | | 165 | | 1 | | |
| | 165 | 165 | | | 1 | | |
| | 165 | | | 165 | 1 | | |
| | 165 | | 165 | | 1 | | |
| | 165 | 165 | | | 1 | | |
| | 165 | | | 165 | 1 | | |
| | 165 | | 165 | | 1 | | |
| | 165 | 165 | | | 1 | | |
| | 165 | | | 165 | 1 | | |
| Main Road | 165 | | 165 | | 1 | | |
| SPARE | 1000 | | | | 3 | | |
| SPARE | | | | | | | |
| SUBTOTAL | 3640 | 825 | 990 | 825 | | 30 | 20 |

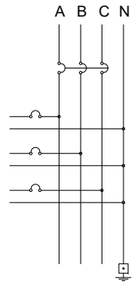


## LOAD SCHEDULE

| PROJECT NAME | FINANCED BY | COUNTERPART | JICA STUDY TEAM |
|---|---|---|---|
| DETAILED DESIGN ON BAGO RIVER BRIDGE CONSTRUCTION PROJECT | JAPAN INTERNATIONAL COOPERATION AGENCY | REPUBLIC OF THE UNION OF MYANMAR MINISTRY OF CONSTRUCTION DEPARTMENT OF BRIDGE | NIPPON KOEI CO., LTD. ORIENTAL CONSULTANTS GLOBAL CO., LTD. METROPOLITAN EXPRESSWAY COMPANY LIMITED CHODAI CO.,LTD. NIPPON ENGINEERING CONSULTANTS CO.,LTD. |

| | NAME | SIGNATURE | DATE |
|---|---|---|---|
| PREPARED BY | K . MORIMATA | | 29 Sep. 2017 |
| CHECKED BY | T. HAYAKAWA | | 3 Oct. 2017 |
| APPROVED BY | Y. SANO | | 6 Oct. 2017 |

| DRAWING TITLE | PACKAGE |
|---|---|
| TYPICAL LIGHTING PLAN FOR CABLE-STAYED BRIDGE(2) | 1 |
| | DWG No. |
| | P1-EL- 0009 |

# TYPICAL LIGHTING PLAN FOR ON-RAMP

## LEGEND:

- ROAD LIGHTING POLE 140(W) 12m HEIGHT FOR NO.28 - 35
  9m HEIGHT FOR NO.1 - 2, 5-27
  6m HEIGHT FOR NO.3 - 4
- WARNING LIGHTS, 200 (W)
- LIGHTING PANEL
- GROUNDING

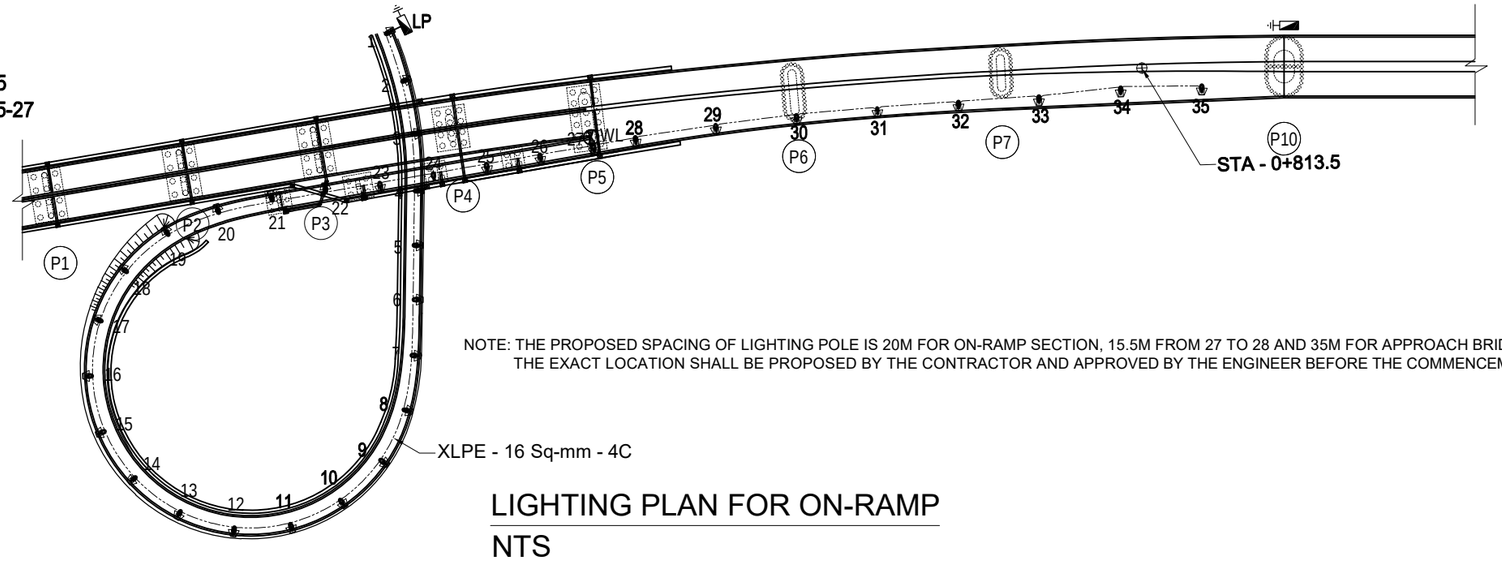


NOTE: THE PROPOSED SPACING OF LIGHTING POLE IS 20M FOR ON-RAMP SECTION, 15.5M FROM 27 TO 28 AND 35M FOR APPROACH BRIDGE AT THE DESIGN STAGE.
THE EXACT LOCATION SHALL BE PROPOSED BY THE CONTRACTOR AND APPROVED BY THE ENGINEER BEFORE THE COMMENCEMENT OF INSTALLATION

## LIGHTING PLAN FOR ON-RAMP

NTS

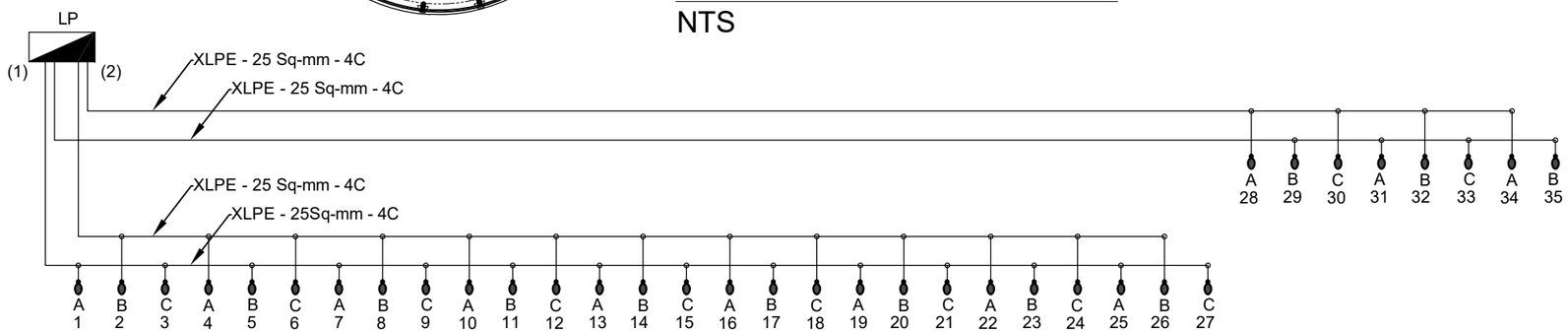


## WIRING DIAGRAM

CKT = LP (1)

| DESCRIPTION | CONNECTED LOAD (VA) | | | | CIRCUIT BREAKER | | |
|---|---|---|---|---|---|---|---|
| | TOTAL | A | B | C | P | AF | AT |
| On Ramp | 60 | 60 | | | 1 | 30 | 20 |
| | 60 | | | 60 | 1 | | |
| | 60 | | 60 | | 1 | | |
| | 60 | 60 | | | 1 | | |
| | 60 | | | 60 | 1 | | |
| | 60 | | 60 | | 1 | | |
| | 60 | 60 | | | 1 | | |
| | 60 | | | 60 | 1 | | |
| | 60 | | 60 | | 1 | | |
| | 60 | 60 | | | 1 | | |
| | 60 | | | 60 | 1 | | |
| | 60 | | 60 | | 1 | | |
| | 60 | 60 | | | 1 | | |
| | 60 | | | 60 | 1 | | |
| | 165 | | 165 | | 1 | | |
| | 165 | 165 | | | 1 | | |
| | 165 | | | 165 | 1 | | |
| On Ramp | 165 | | 165 | | 1 | | |
| SPARE | 1000 | | | | 3 | | |
| SPARE | | | | | | | |
| SUBTOTAL | 2500 | 465 | 570 | 465 | | 30 | 20 |

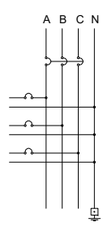


CKT = LP (2)

| DESCRIPTION | CONNECTED LOAD (VA) | | | | CIRCUIT BREAKER | | |
|---|---|---|---|---|---|---|---|
| | TOTAL | A | B | C | P | AF | AT |
| On Ramp | 60 | | 60 | | 1 | 30 | 20 |
| | 60 | 60 | | | 1 | | |
| | 60 | | | 60 | 1 | | |
| | 60 | | 60 | | 1 | | |
| | 60 | 60 | | | 1 | | |
| | 60 | | | 60 | 1 | | |
| | 60 | | 60 | | 1 | | |
| | 60 | 60 | | | 1 | | |
| | 60 | | | 60 | 1 | | |
| | 60 | | 60 | | 1 | | |
| | 60 | 60 | | | 1 | | |
| | 60 | | | 60 | 1 | | |
| | 60 | | 60 | | 1 | | |
| | 165 | 165 | | | 1 | | |
| | 165 | | | 165 | 1 | | |
| | 165 | | 165 | | 1 | | |
| On Ramp | 165 | 165 | | | 1 | | |
| SPARE | 1000 | | | | 3 | | |
| SPARE | | | | | | | |
| SUBTOTAL | 2440 | 570 | 465 | 405 | | 30 | 20 |

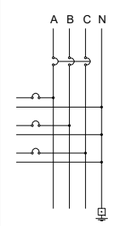


## LOAD SCHEDULE

| PROJECT NAME | FINANCED BY | COUNTERPART | JICA STUDY TEAM |
|---|---|---|---|
| DETAILED DESIGN ON BAGO RIVER BRIDGE CONSTRUCTION PROJECT | JAPAN INTERNATIONAL COOPERATION AGENCY | REPUBLIC OF THE UNION OF MYANMAR MINISTRY OF CONSTRUCTION DEPARTMENT OF BRIDGE | NIPPON KOEI CO., LTD. ORIENTAL CONSULTANTS GLOBAL CO., LTD. METROPOLITAN EXPRESSWAY COMPANY LIMITED CHODAI CO.,LTD. NIPPON ENGINEERING CONSULTANTS CO.,LTD. |

| | NAME | SIGNATURE | DATE |
|---|---|---|---|
| PREPARED BY | K . MORIMATA | | 29 Sep. 2017 |
| CHECKED BY | T. HAYAKAWA | | 3 Oct. 2017 |
| APPROVED BY | Y. SANO | | 6 Oct. 2017 |

| DRAWING TITLE | PACKAGE |
|---|---|
| LIGHTING PLAN FOR ON-RAMP | 1 |
| | DWG No. |
| | P1-EL- 0010 |

# (REFERENCE) SINGLE LINE DIAGRAM FOR PANELS

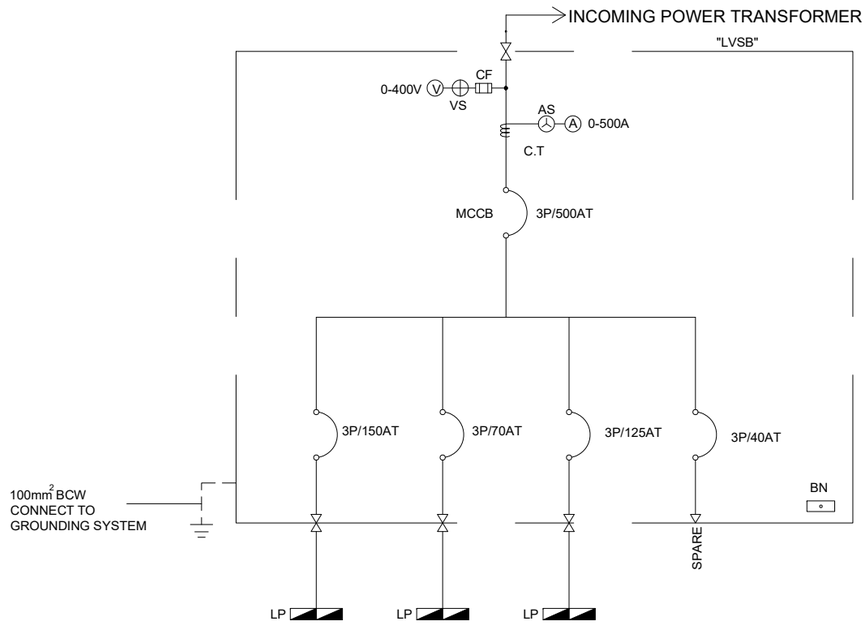


## SINGLE LINE DIAGRAM FOR MAIN DISTRIBUTION PANEL

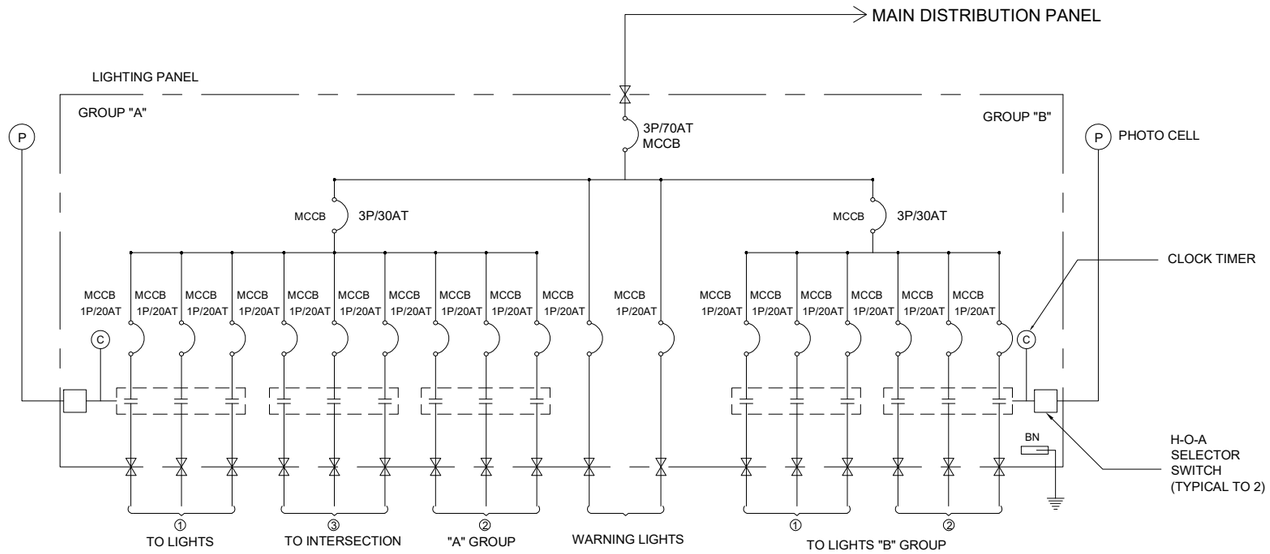


## SINGLE LINE DIAGRAM FOR LIGHTING PANEL

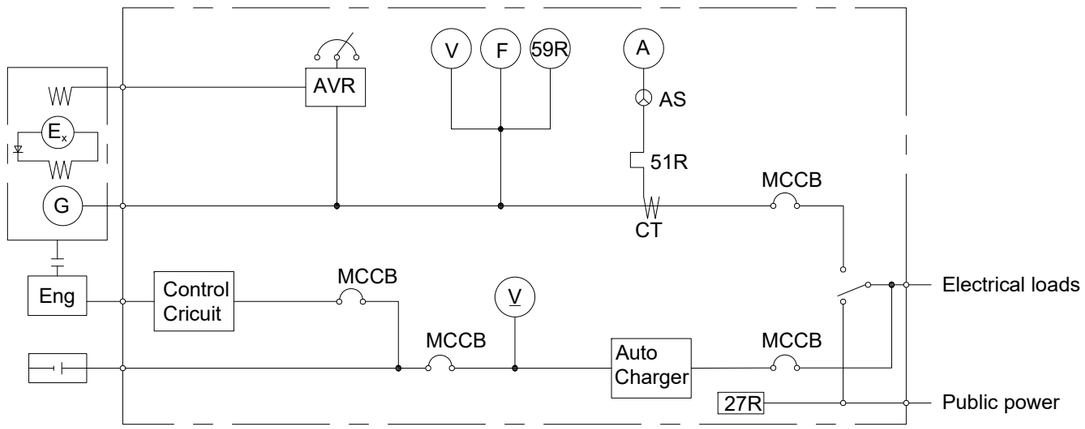


## SINGLE LINE DIAGRAM FOR ENGINE GENERATOR CONTROL PANEL

## LEGEND

| | | | | | |
|---|---|---|---|---|---|
| | : | MOLD-CASE CIRCUIT BREAKER | Eng | : | DIESEL ENGINE |
| AT | : | AMPERE TRIPPING | G | : | GENERATOR |
| | : | GROUNDING | Ex | : | EXITER |
| | : | CONTACTOR | A | : | AMPERE METER |
| VS | : | VOLTMETER CHANGE OVER SWITCH | V | : | VOLTAGE METER |
| AS | : | AMMETER CHANGOVER SWITCH | F | : | FREQUENCY METER |
| CT | : | CURRENT TRANSFORMER | | : | BATTERY |
| | | | AVR | : | AUTOMATIC VOLTAGE LEGULATOR |
| | | | 27R | : | LOW VOLTAGE RELAY |
| | | | 59G | : | OVER VOLTAGE |
| | | | 51R | : | OVERCURRENT RELAY |

| PROJECT NAME | FINANCED BY | COUNTERPART | JICA STUDY TEAM |
|---|---|---|---|
| DETAILED DESIGN ON BAGO RIVER BRIDGE CONSTRUCTION PROJECT | JAPAN INTERNATIONAL COOPERATION AGENCY | REPUBLIC OF THE UNION OF MYANMAR MINISTRY OF CONSTRUCTION DEPARTMENT OF BRIDGE | NIPPON KOEI CO., LTD. ORIENTAL CONSULTANTS GLOBAL CO., LTD. METROPOLITAN EXPRESSWAY COMPANY LIMITED CHODAI CO.,LTD. NIPPON ENGINEERING CONSULTANTS CO.,LTD. |

| | NAME | SIGNATURE | DATE |
|---|---|---|---|
| PREPARED BY | K . MORIMATA | | 29 Sep. 2017 |
| CHECKED BY | T. HAYAKAWA | | 3 Oct. 2017 |
| APPROVED BY | Y. SANO | | 6 Oct. 2017 |

| DRAWING TITLE | PACKAGE |
|---|---|
| (REFERENCE) SINGLE LINE DIAGRAM FOR PANELS | 1 |
| | DWG No. |
| | P1-EL- 0011 |

# TYPICAL LED LUMINAIR AND POLE

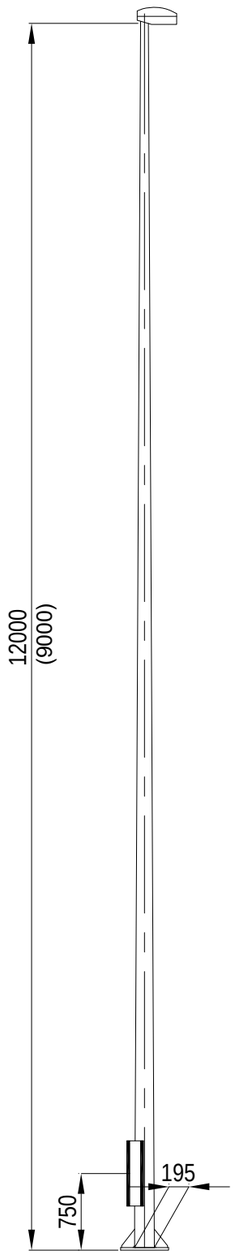


NOTE: (  ) : FOR ON-RAMP

OUTLINE OF POLE

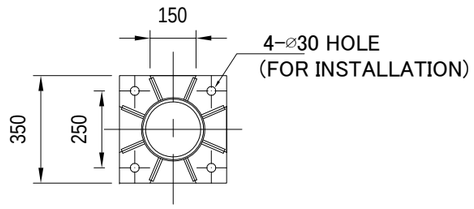


DETAILS OF BASE PLATE

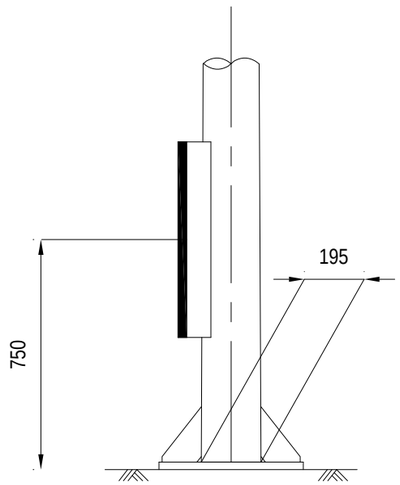


MAINTENANCE OPENING

REFERENCE FOR LIGHTING POLE

NTS

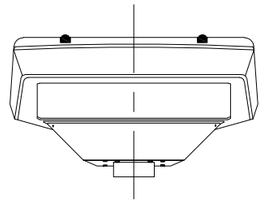

FRONT VIEW

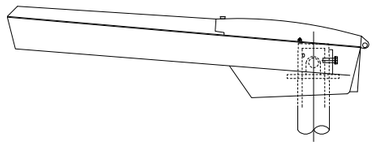

SIDE VIEW

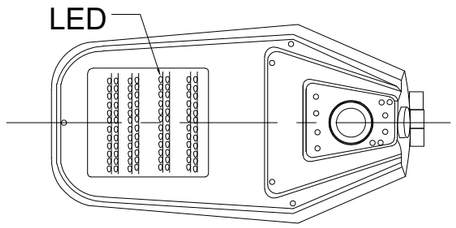


REFERENCE FOR LED LUMINAIR

NTS

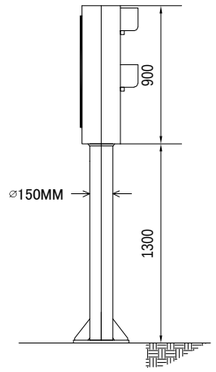


SIDE VIEW

NTS

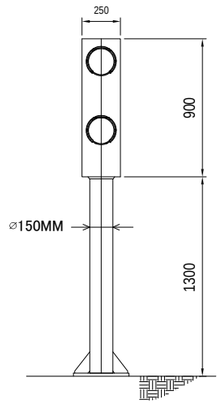


FRONT VIEW

NTS

REFERENCE WARNING LIGHTS

NTS

| PROJECT NAME | FINANCED BY | COUNTERPART | JICA STUDY TEAM |
|---|---|---|---|
| DETAILED DESIGN ON BAGO RIVER BRIDGE CONSTRUCTION PROJECT | JAPAN INTERNATIONAL COOPERATION AGENCY | REPUBLIC OF THE UNION OF MYANMAR MINISTRY OF CONSTRUCTION DEPARTMENT OF BRIDGE | NIPPON KOEI CO., LTD. ORIENTAL CONSULTANTS GLOBAL CO., LTD. METROPOLITAN EXPRESSWAY COMPANY LIMITED CHODAI CO.,LTD. NIPPON ENGINEERING CONSULTANTS CO.,LTD. |

| | NAME | SIGNATURE | DATE | DRAWING TITLE | PACKAGE |
|---|---|---|---|---|---|
| PREPARED BY | K . MORIMATA | | 29 Sep. 2017 | TYPICAL LED LUMINAIR AND POLE | 1 |
| CHECKED BY | T. HAYAKAWA | | 3 Oct. 2017 | | DWG No. |
| APPROVED BY | Y. SANO | | 6 Oct. 2017 | | P1-EL- 0012 |

# TYPICAL FOUNDATION DETAILS FOR ROAD LIGHTING POLE

TOP VIEW

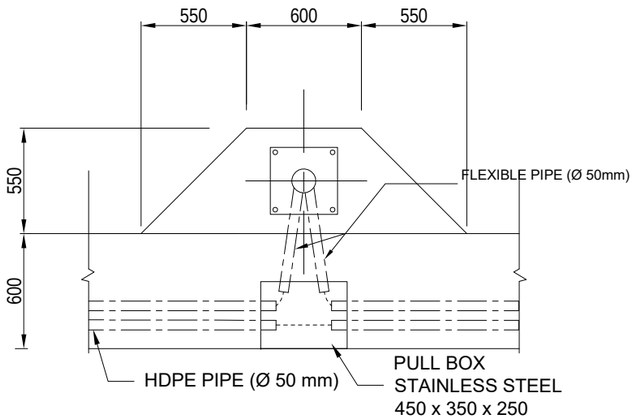


TOP VIEW

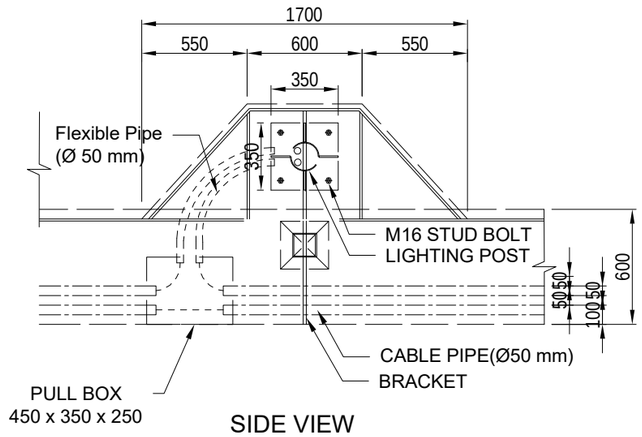


SIDE VIEW

PIPING DETAIL

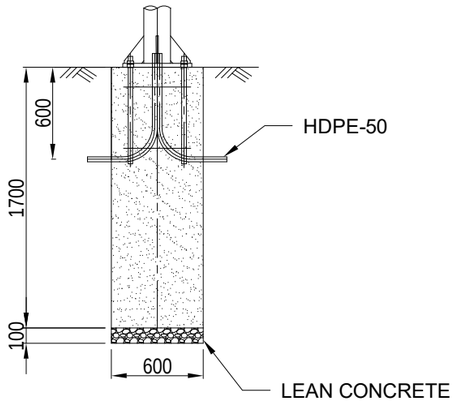


DETAIL OF ANCHOR BOLT

SIDE VIEW

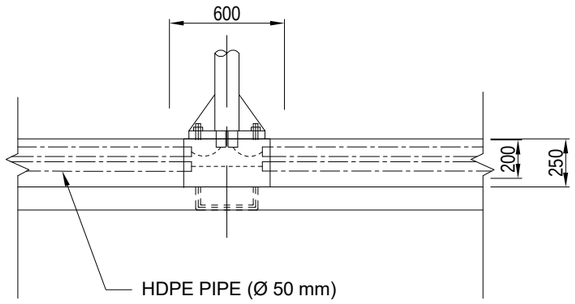


CROSS SECTION

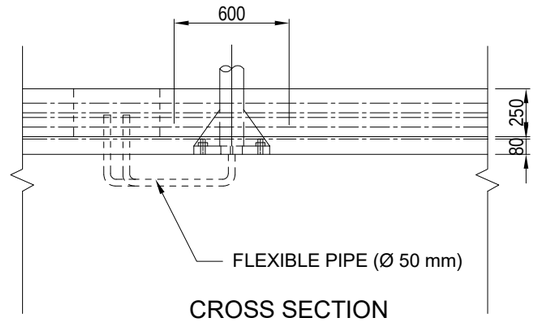


CROSS SECTION

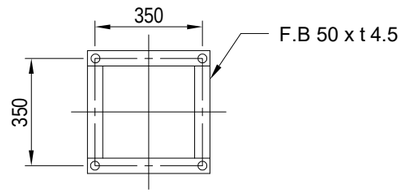


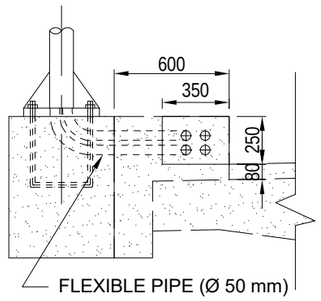


PC BOX GIRDER BRIDGE
NTS

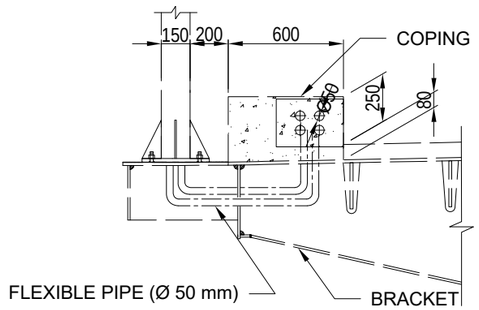


CABLE STAYED BRIDGE
STEEL BOX GIRDER BRIDGE
NTS

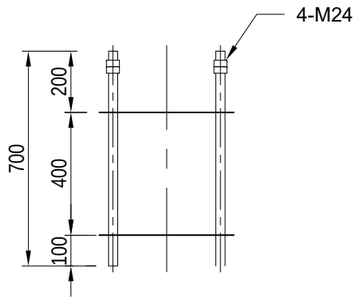


FOR PUBLIC ROAD LIGHTING POLE
NTS

| PROJECT NAME | FINANCED BY | COUNTERPART | JICA STUDY TEAM |
|---|---|---|---|
| DETAILED DESIGN ON BAGO RIVER BRIDGE CONSTRUCTION PROJECT | JAPAN INTERNATIONAL COOPERATION AGENCY | REPUBLIC OF THE UNION OF MYANMAR MINISTRY OF CONSTRUCTION DEPARTMENT OF BRIDGE | NIPPON KOEI CO., LTD. ORIENTAL CONSULTANTS GLOBAL CO., LTD. METROPOLITAN EXPRESSWAY COMPANY LIMITED CHODAI CO.,LTD. NIPPON ENGINEERING CONSULTANTS CO.,LTD. |

| | NAME | SIGNATURE | DATE |
|---|---|---|---|
| PREPARED BY | K . MORIMATA | | 29 Sep. 2017 |
| CHECKED BY | T. HAYAKAWA | | 3 Oct. 2017 |
| APPROVED BY | Y. SANO | | 6 Oct. 2017 |

| DRAWING TITLE | PACKAGE |
|---|---|
| TYPICAL FOUNDATION DETAILS FOR ROAD LIGHTING POLE | 1 |
| | DWG No. |
| | P1-EL- 0013 |

# (REFERENCE) INSTALLATION DETAIL FOR FLEXIBLE PIPE

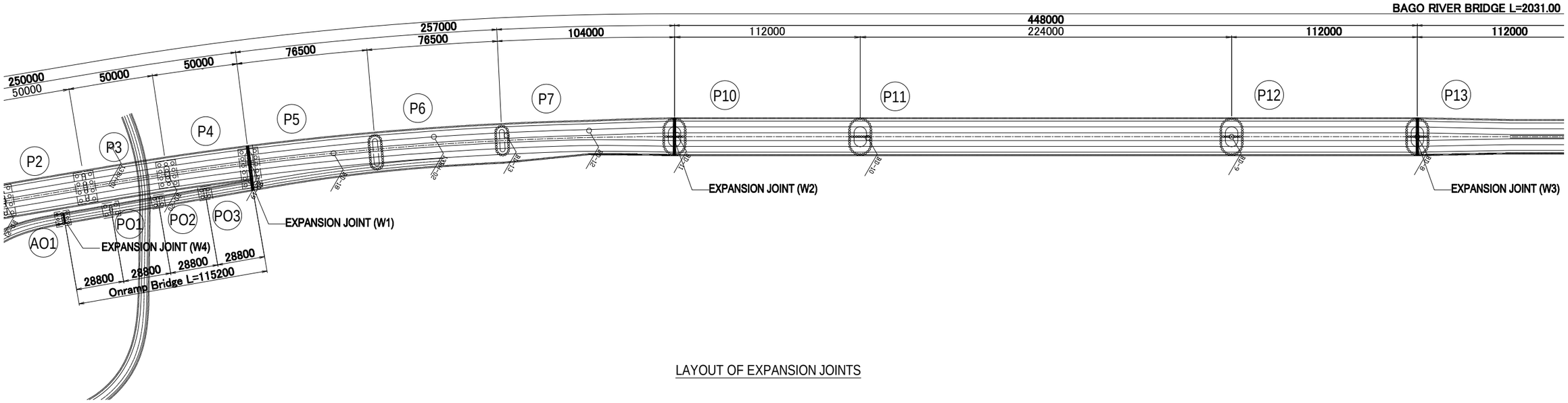


LAYOUT OF EXPANSION JOINTS

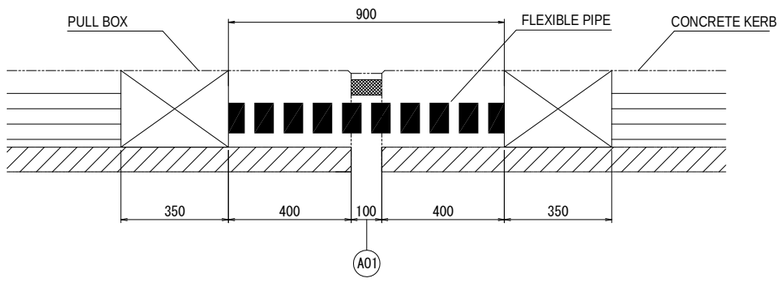


TYPICAL INSTALLATION DETAIL OF FLEXIBLE PIPE (AO1))

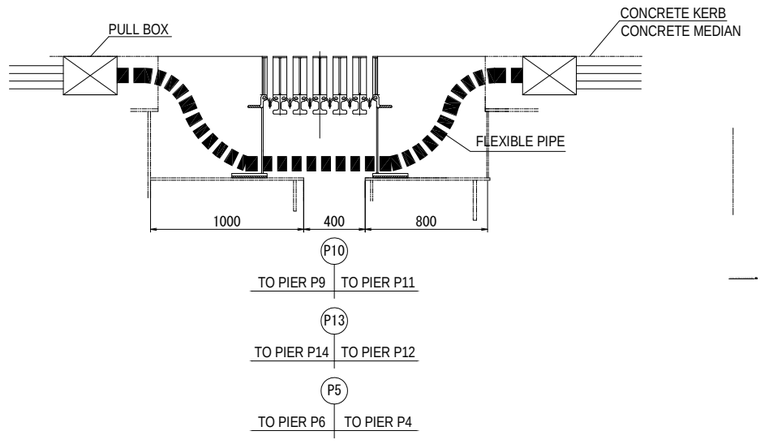


TYPICAL INSTALLATION DETAIL OF FLEXIBLE PIPE (P10,P13)

| | No | W (mm) |
|---|---|---|
| EXPANSION | 1 | 3500 |
| | 2 | 3500 |
| | 3 | 3500 |
| | 4 | 1000 |


DIAMETER OF FLEXIBLE PIPE

| PROJECT NAME | FINANCED BY | COUNTERPART | JICA STUDY TEAM |
|---|---|---|---|
| DETAILED DESIGN ON BAGO RIVER BRIDGE CONSTRUCTION PROJECT | JAPAN INTERNATIONAL COOPERATION AGENCY | REPUBLIC OF THE UNION OF MYANMAR MINISTRY OF CONSTRUCTION DEPARTMENT OF BRIDGE | NIPPON KOEI CO., LTD. ORIENTAL CONSULTANTS GLOBAL CO., LTD. METROPOLITAN EXPRESSWAY COMPANY LIMITED CHODAI CO.,LTD. NIPPON ENGINEERING CONSULTANTS CO.,LTD. |

| | NAME | SIGNATURE | DATE |
|---|---|---|---|
| PREPARED BY | K . MORIMATA | | 29 Sep. 2017 |
| CHECKED BY | T. HAYAKAWA | | 3 Oct. 2017 |
| APPROVED BY | Y. SANO | | 6 Oct. 2017 |

| DRAWING TITLE | PACKAGE |
|---|---|
| (REFERENCE) INSTALLATION DETAIL FOR FLEXIBLE PIPE | 1 |
| | DWG No. |
| | P1-EL- 0014 |

# (REFERENCE) OUTLINE OF ELECTRIC PANELS

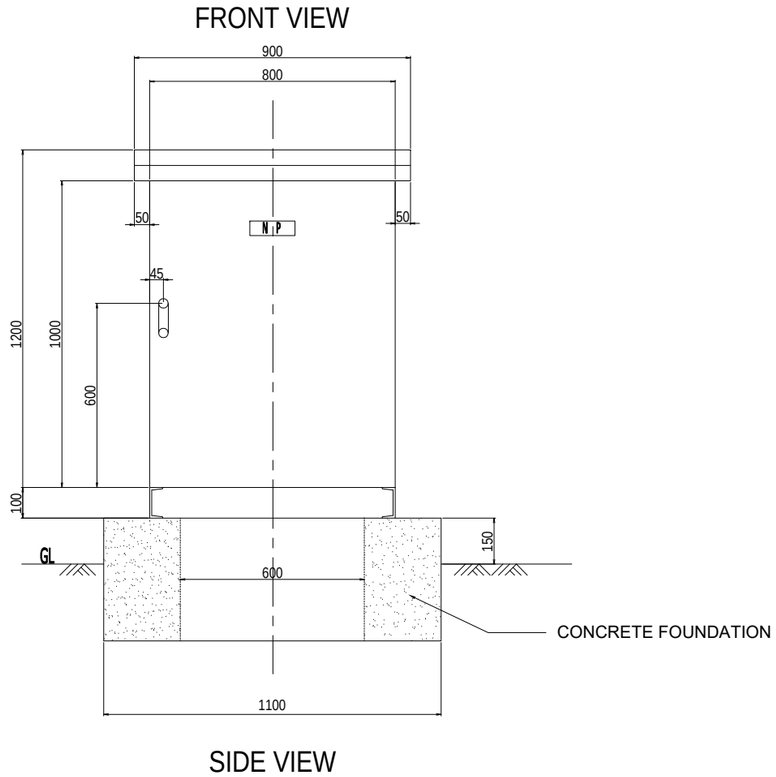


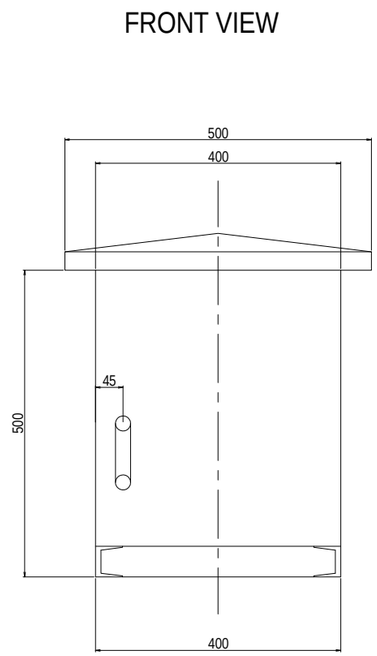


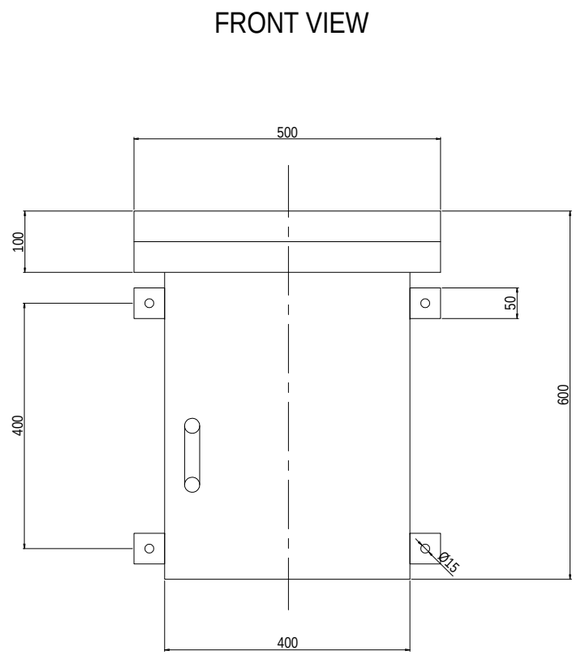


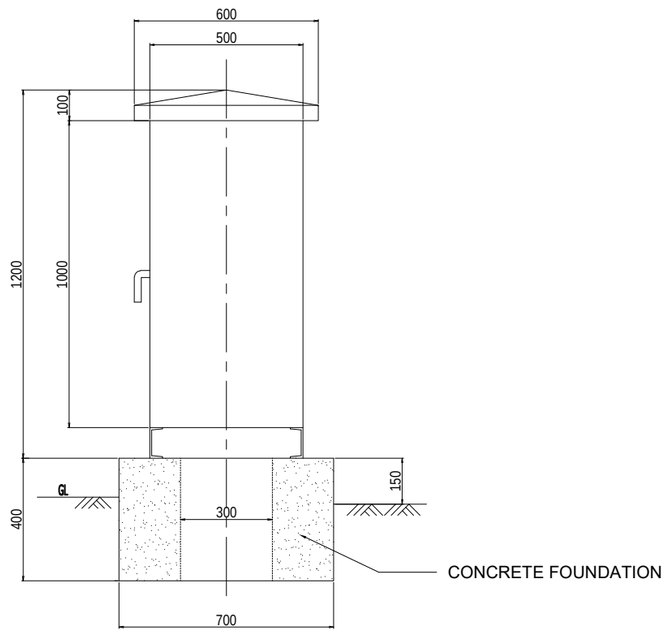


MAIN DISTRIBUTION PANEL S=1:20

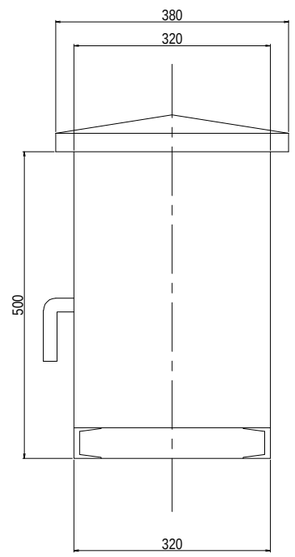


LIGHTING PANEL S=1:10

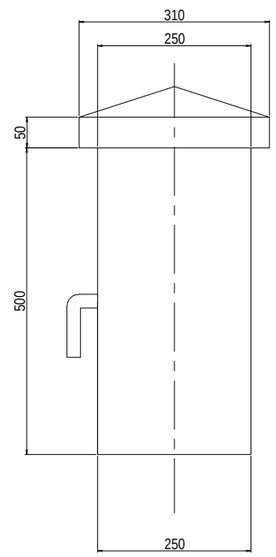


POLE MOUNTED TYPE BOX S=1:10

| PROJECT NAME | FINANCED BY | COUNTERPART | JICA STUDY TEAM |
|---|---|---|---|
| DETAILED DESIGN ON BAGO RIVER BRIDGE CONSTRUCTION PROJECT | JAPAN INTERNATIONAL COOPERATION AGENCY | REPUBLIC OF THE UNION OF MYANMAR MINISTRY OF CONSTRUCTION DEPARTMENT OF BRIDGE | NIPPON KOEI CO., LTD. ORIENTAL CONSULTANTS GLOBAL CO., LTD. METROPOLITAN EXPRESSWAY COMPANY LIMITED CHODAI CO.,LTD. NIPPON ENGINEERING CONSULTANTS CO.,LTD. |

| | NAME | SIGNATURE | DATE |
|---|---|---|---|
| PREPARED BY | K . MORIMATA | | 29 Sep. 2017 |
| CHECKED BY | T. HAYAKAWA | | 3 Oct. 2017 |
| APPROVED BY | Y. SANO | | 6 Oct. 2017 |

| DRAWING TITLE | PACKAGE |
|---|---|
| (REFERENCE) OUTLINE OF ELECTRIC PANELS | 1 |
| | DWG No. |
| | P1-EL- 0015 |

# TYPICAL TRAFFIC SIGNAL SYSTEM PLAN FOR STA.0+40 INTERSECTION

## LEGEND

- : Concrete pole
- : Steel pole
- : Traffic signal controller
- : Vehicle traffic signal
- : Arrow sign traffic signal
- : Pedestrian signal
- P B : Push-button switch
- J : Junction box
- S : Power supply box
- P : Pull box
- H : Hand hole
- : Raising underground pipe
- : Cable
- : Underground piping
- SVV : Control -use vinyl insulated vinyl sheated cable
- IV : Indoor PVC
- E : Grounding

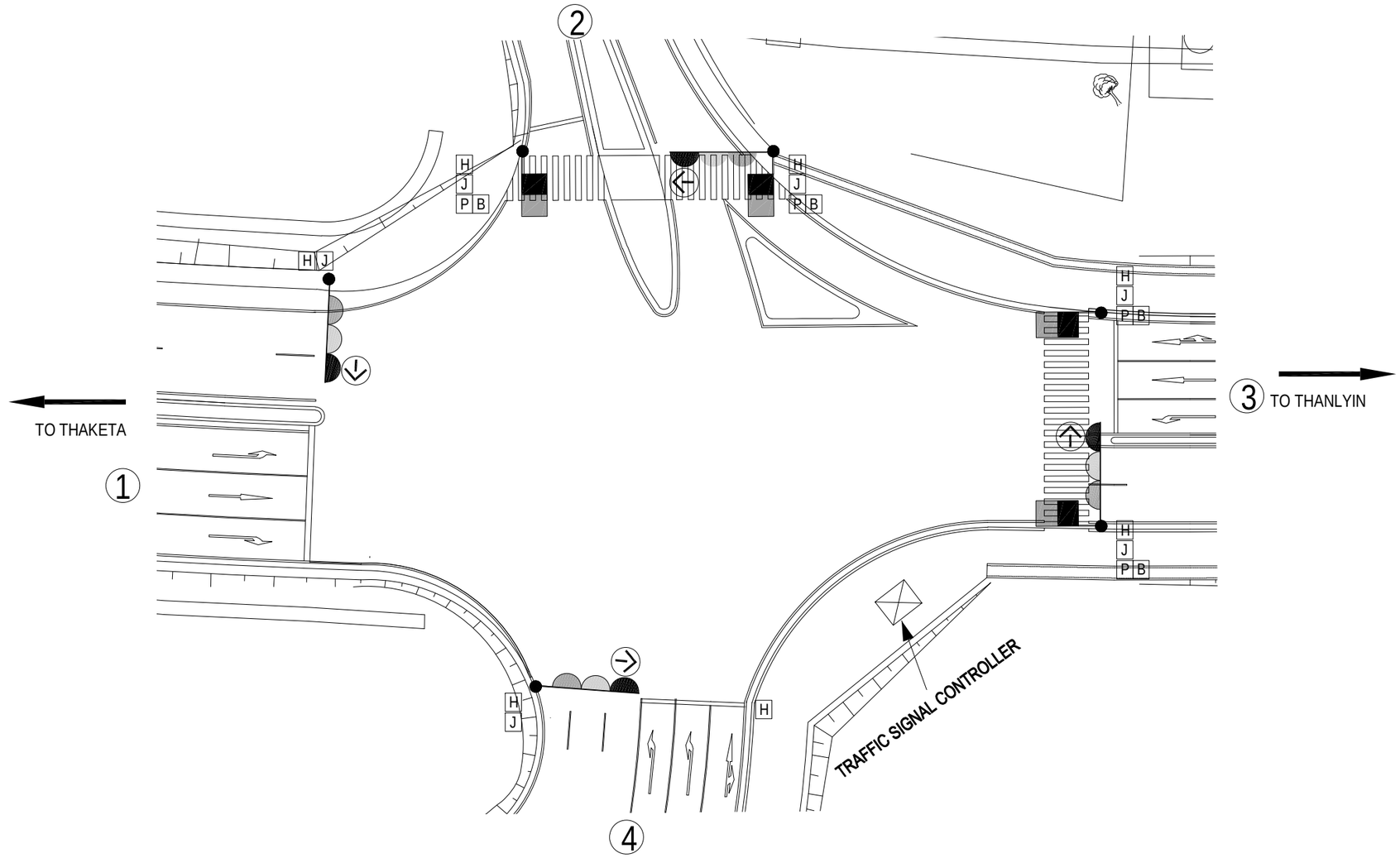


TRAFFIC SIGNAL SYSTEM PLAN

NTS

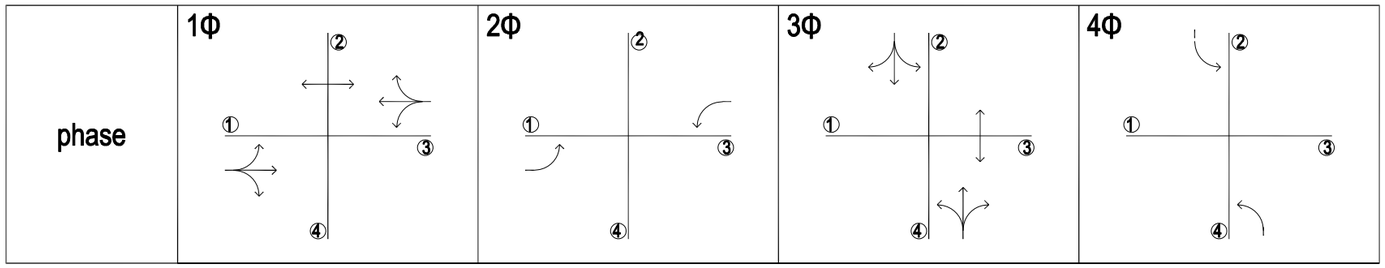


## TRAFFIC SIGNAL AND PEDESTRIAN PHASING DIAGRAM

| PROJECT NAME | FINANCED BY | COUNTERPART | JICA STUDY TEAM |
|---|---|---|---|
| DETAILED DESIGN ON BAGO RIVER BRIDGE CONSTRUCTION PROJECT | JAPAN INTERNATIONAL COOPERATION AGENCY | REPUBLIC OF THE UNION OF MYANMAR MINISTRY OF CONSTRUCTION DEPARTMENT OF BRIDGE | NIPPON KOEI CO., LTD. ORIENTAL CONSULTANTS GLOBAL CO., LTD. METROPOLITAN EXPRESSWAY COMPANY LIMITED CHODAI CO.,LTD. NIPPON ENGINEERING CONSULTANTS CO.,LTD. |

| | NAME | SIGNATURE | DATE |
|---|---|---|---|
| PREPARED BY | K . MORIMATA | | 29 Sep. 2017 |
| CHECKED BY | T. HAYAKAWA | | 3 Oct. 2017 |
| APPROVED BY | Y. SANO | | 6 Oct. 2017 |

| DRAWING TITLE | PACKAGE |
|---|---|
| TYPICAL TRAFFIC SIGNAL SYSTEM PLAN FOR STA.0+40 INTERSECTION | 1 |
| | DWG No. |
| | P1-EL- 0016 |

# TYPICAL TRAFFIC SIGNAL CONTROL SYSTEM DIAGRAM

LEGND

G : Vehicle traffic signal : Green light

Y : Vehicle traffic signal : Yellow light

R : Vehicle traffic signal : Red light

A : Arrow traffic signal : Green light

PG : Pedestrian signal lamp : Green light

PR : Pedestrian signal lamp : Red light

COM : Common for all indication

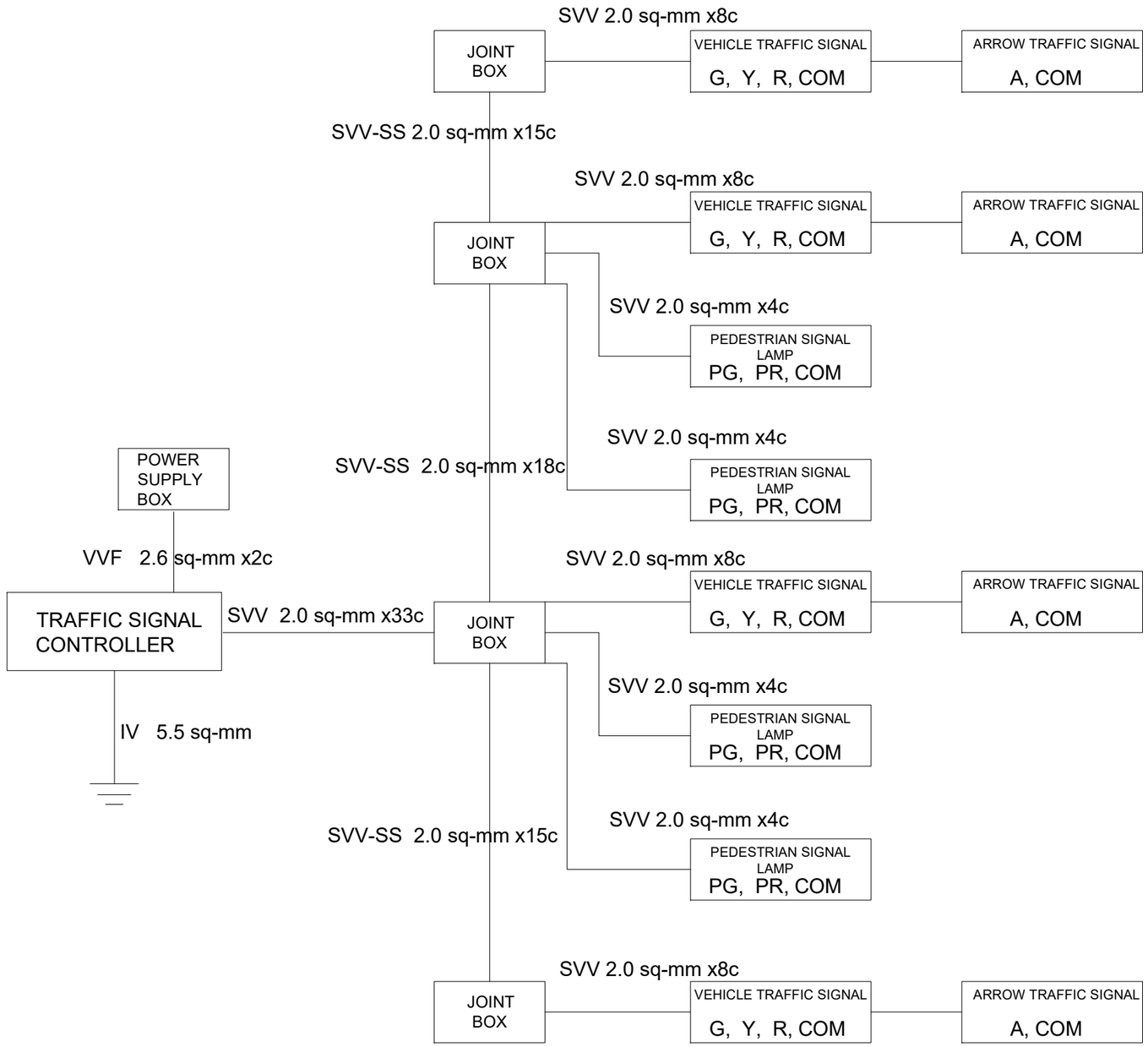


## TYPICAL TRAFFIC SIGNAL CONTROL SYSTEM DIAGRAM FOR STA.0+40 INTERSECTION

| PROJECT NAME | FINANCED BY | COUNTERPART | JICA STUDY TEAM | | NAME | SIGNATURE | DATE | DRAWING TITLE | PACKAGE |
|---|---|---|---|---|---|---|---|---|---|
| DETAILED DESIGN ON BAGO RIVER BRIDGE CONSTRUCTION PROJECT | JAPAN INTERNATIONAL COOPERATION AGENCY | REPUBLIC OF THE UNION OF MYANMAR MINISTRY OF CONSTRUCTION DEPARTMENT OF BRIDGE | NIPPON KOEI CO., LTD. ORIENTAL CONSULTANTS GLOBAL CO., LTD. METROPOLITAN EXPRESSWAY COMPANY LIMITED CHODAI CO.,LTD. NIPPON ENGINEERING CONSULTANTS CO.,LTD. | PREPARED BY | K . MORIMATA | | 29 Sep. 2017 | TYPICAL TRAFFIC SIGNAL CONTROL SYSTEM DIAGRAM | 1 |
| | | | | CHECKED BY | T. HAYAKAWA | | 3 Oct. 2017 | | DWG No. |
| | | | | APPROVED BY | Y. SANO | | 6 Oct. 2017 | | P1-EL- 0017 |

# TYPICAL UNDERGROUND WIRING PLAN FOR STA.0+40 INTERSECTION

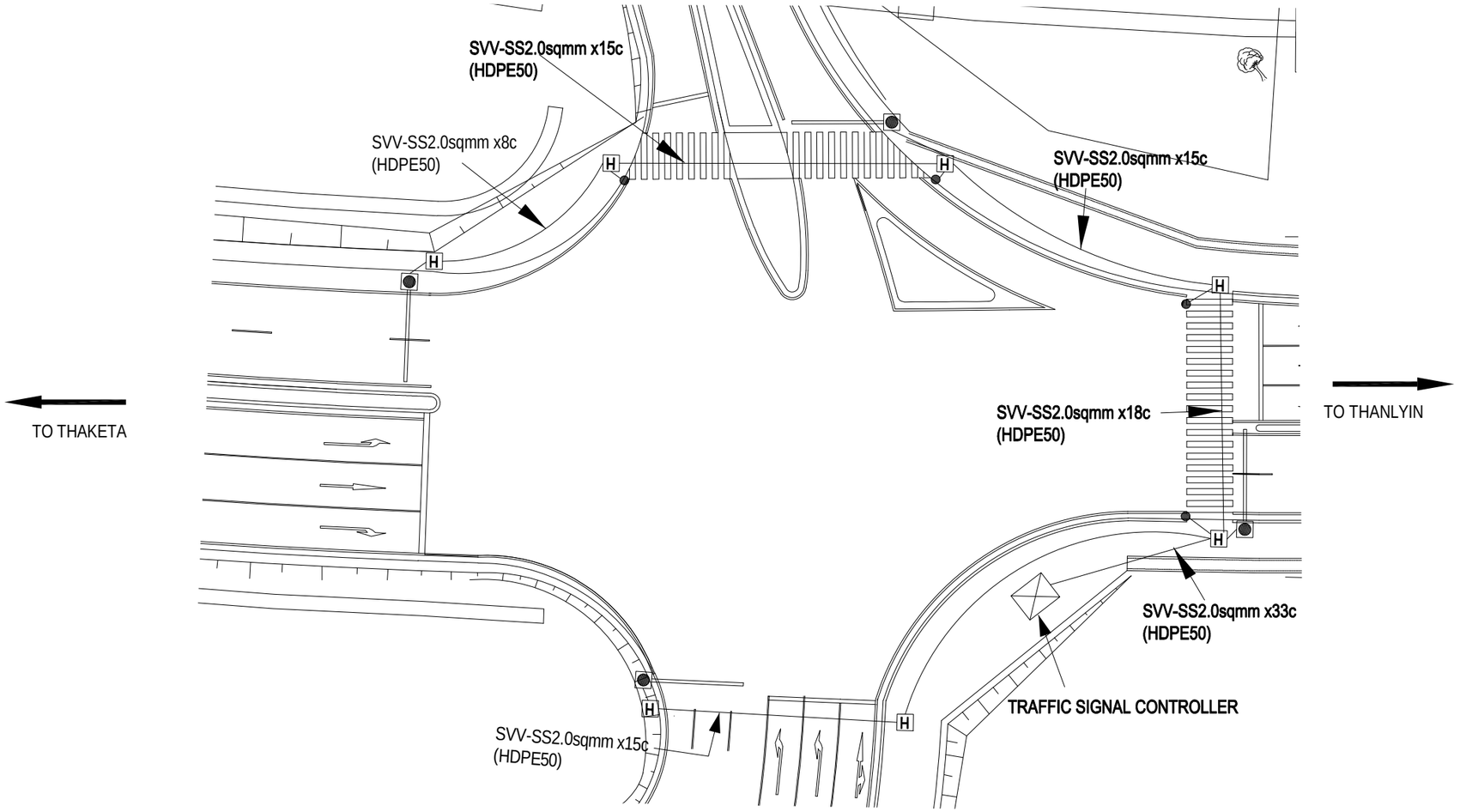


UNDERGROUND WIRING PLAN FOR STA.0+40 INTERSECTION
1:400

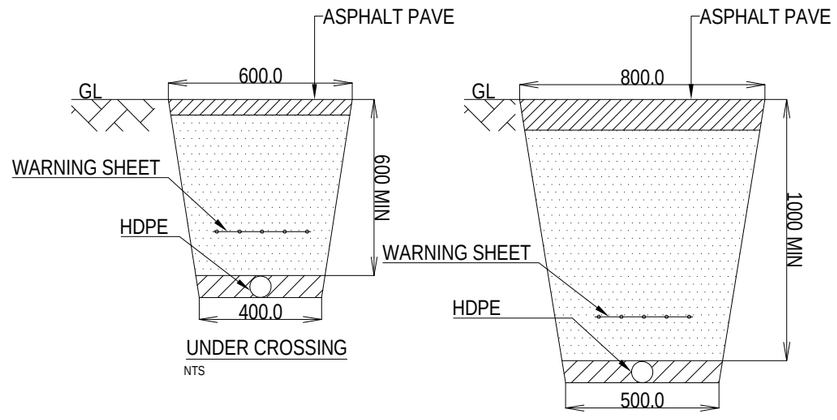


UNDER CROSSING
NTS

UNDER ROAD
NTS

## LEGEND

: Base mounted pole signal head pole (with arm)

: Pedestrian signal head pole (with push-button)

: Underground wiring

| PROJECT NAME | FINANCED BY | COUNTERPART | JICA STUDY TEAM |
|---|---|---|---|
| DETAILED DESIGN ON BAGO RIVER BRIDGE CONSTRUCTION PROJECT | JAPAN INTERNATIONAL COOPERATION AGENCY | REPUBLIC OF THE UNION OF MYANMAR MINISTRY OF CONSTRUCTION DEPARTMENT OF BRIDGE | NIPPON KOEI CO., LTD. ORIENTAL CONSULTANTS GLOBAL CO., LTD. METROPOLITAN EXPRESSWAY COMPANY LIMITED CHODAI CO.,LTD. NIPPON ENGINEERING CONSULTANTS CO.,LTD. |

| | NAME | SIGNATURE | DATE |
|---|---|---|---|
| PREPARED BY | K . MORIMATA | | 29 Sep. 2017 |
| CHECKED BY | T. HAYAKAWA | | 3 Oct. 2017 |
| APPROVED BY | Y. SANO | | 6 Oct. 2017 |

DRAWING TITLE: TYPICAL UNDERGROUND WIRING PLAN FOR STA.0+40 INTERSECTION

PACKAGE: 1

DWG No.: P1-EL- 0018

# (REFERENCE) TRAFFIC SIGNAL HEAD AND POLES

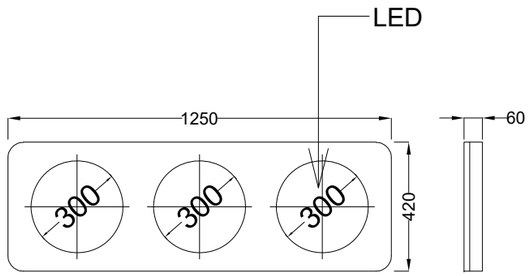


FRONT VIEW SIDE VIEW

TYPICAL SIGNAL HEAD S=1:20

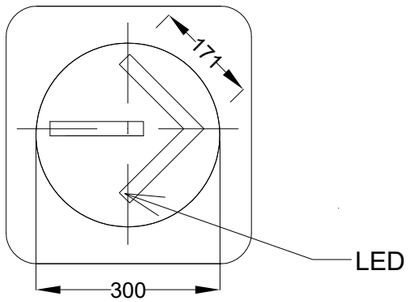


TYPICAL ARROW SIGNAL DETAIL S=1:10

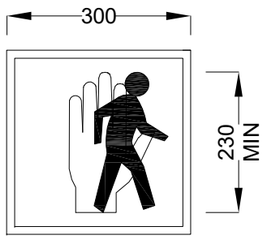


TYPICAL PEDESTRIAN SIGNAL S=1:10

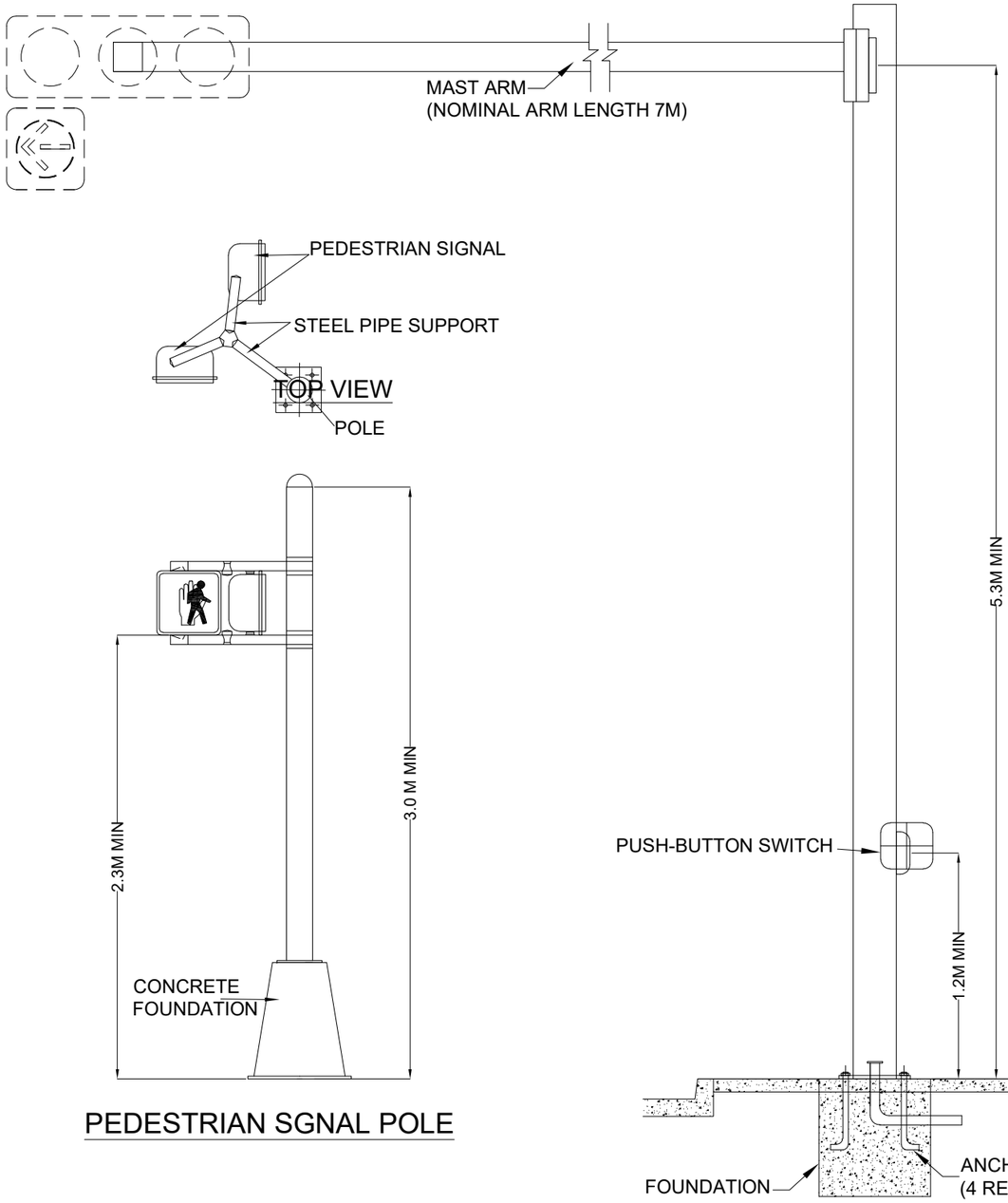


PEDESTRIAN SGNAL POLE

TRAFFIC SIGNAL HEAD POLE

| PROJECT NAME | FINANCED BY | COUNTERPART | JICA STUDY TEAM |
|---|---|---|---|
| DETAILED DESIGN ON BAGO RIVER BRIDGE CONSTRUCTION PROJECT | JAPAN INTERNATIONAL COOPERATION AGENCY | REPUBLIC OF THE UNION OF MYANMAR MINISTRY OF CONSTRUCTION DEPARTMENT OF BRIDGE | NIPPON KOEI CO., LTD. ORIENTAL CONSULTANTS GLOBAL CO., LTD. METROPOLITAN EXPRESSWAY COMPANY LIMITED CHODAI CO.,LTD. NIPPON ENGINEERING CONSULTANTS CO.,LTD. |

| | NAME | SIGNATURE | DATE |
|---|---|---|---|
| PREPARED BY | K . MORIMATA | | 29 Sep. 2017 |
| CHECKED BY | T. HAYAKAWA | | 3 Oct. 2017 |
| APPROVED BY | Y. SANO | | 6 Oct. 2017 |

| DRAWING TITLE | PACKAGE |
|---|---|
| (REFERENCE) TRAFFIC SIGNAL HEAD AND POLES | 1 |
| | DWG No. |
| | P1-EL- 0019 |

# (REFERENCE) OUTLINE OF TRAFFIC SIGNAL CONTROLLER AND JUNCTION BOX

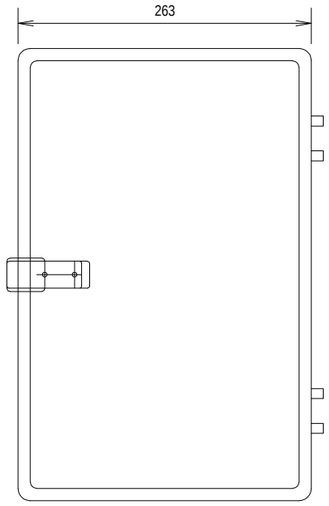


FRONT VIEW

UNIT : mm

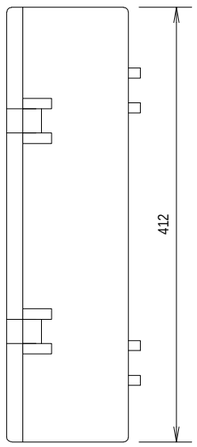


SIDE VIEW

UNIT : mm

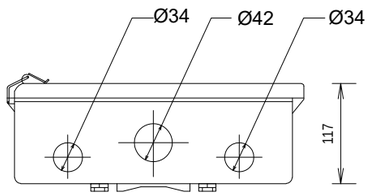


BOTTOM VIEW

UNIT : mm

TYPICAL OUTLINE OF JUNCTION BOX

NTS

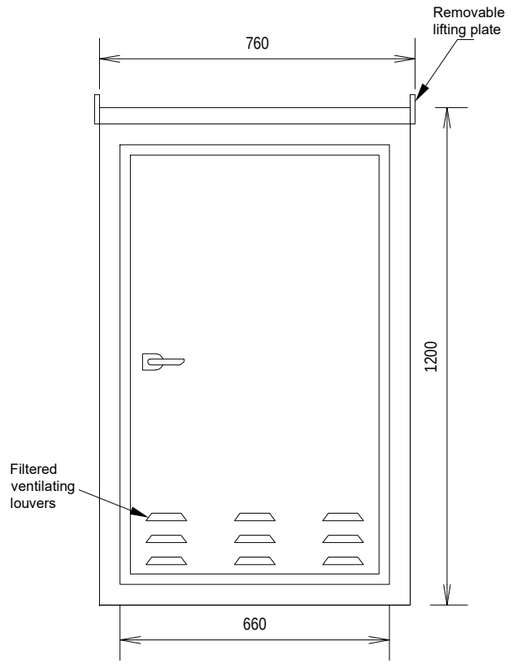


FRONT VIEW

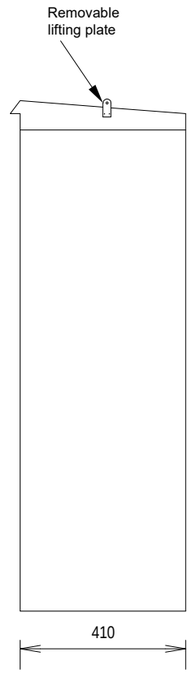


SIDE VIEW

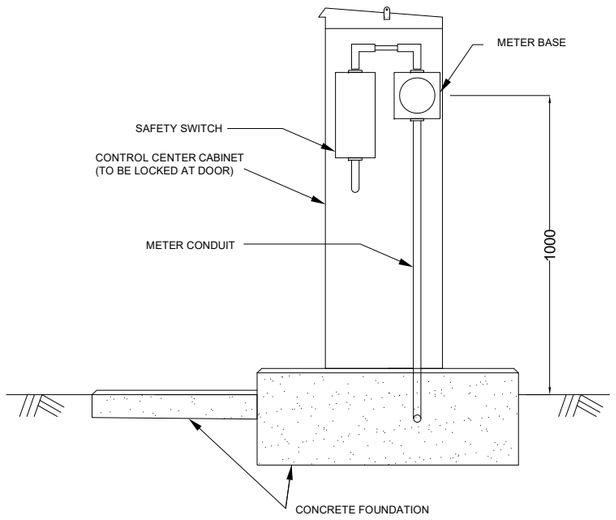


SIDE VIEW

UNIT : mm

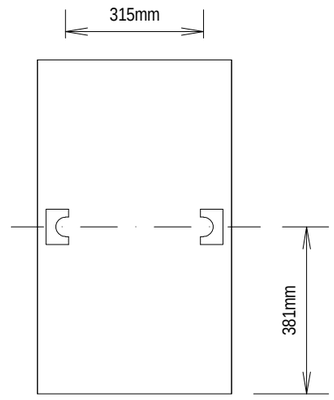


TYPICAL TRAFFIC SIGNAL CONTROLLER

| PROJECT NAME | FINANCED BY | COUNTERPART | JICA STUDY TEAM |
|---|---|---|---|
| DETAILED DESIGN ON BAGO RIVER BRIDGE CONSTRUCTION PROJECT | JAPAN INTERNATIONAL COOPERATION AGENCY | REPUBLIC OF THE UNION OF MYANMAR MINISTRY OF CONSTRUCTION DEPARTMENT OF BRIDGE | NIPPON KOEI CO., LTD. ORIENTAL CONSULTANTS GLOBAL CO., LTD. METROPOLITAN EXPRESSWAY COMPANY LIMITED CHODAI CO.,LTD. NIPPON ENGINEERING CONSULTANTS CO.,LTD. |

| | NAME | SIGNATURE | DATE |
|---|---|---|---|
| PREPARED BY | K . MORIMATA | | 29 Sep. 2017 |
| CHECKED BY | T. HAYAKAWA | | 3 Oct. 2017 |
| APPROVED BY | Y. SANO | | 6 Oct. 2017 |

| DRAWING TITLE | PACKAGE |
|---|---|
| (REFERENCE) OUTLINE OF TRAFFIC SIGNAL CONTROLLER AND JUNCTION BOX | 1 |
| | DWG No. |
| | P1-EL- 0020 |

# (REFERENCE) TYPICAL AVIATION OBSTRUCTION LIGHT PLAN

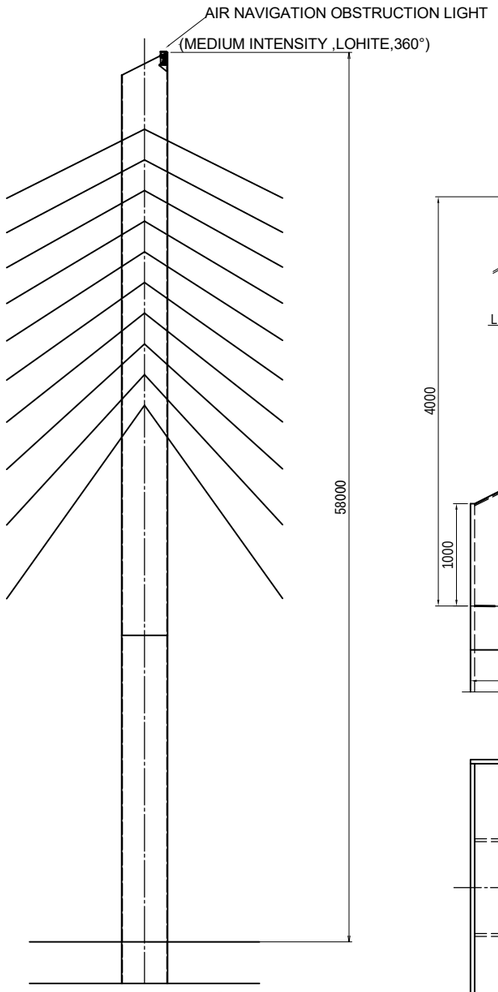


SIDE VIEW
NTS

SIDE ELEVATION

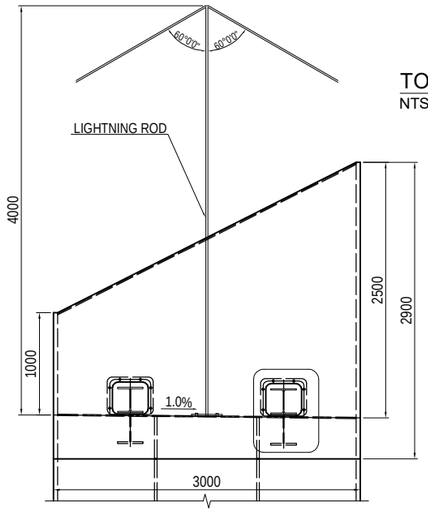


PLAN

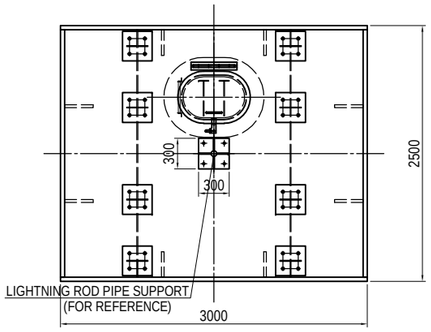


LIGHTNING ROD

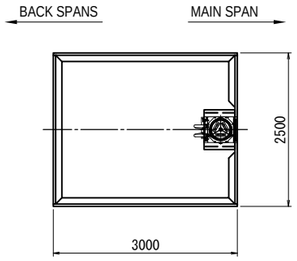


TOP-VIEW FOR OBSTRUCTION LIGHT
NTS

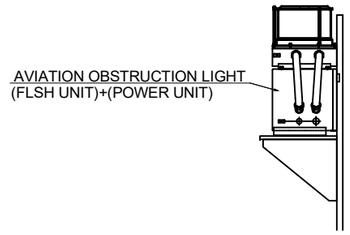


BASE OF OBSTACLE LIGHTS DETAIL
NTS

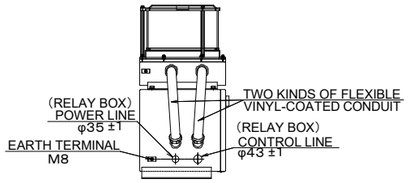


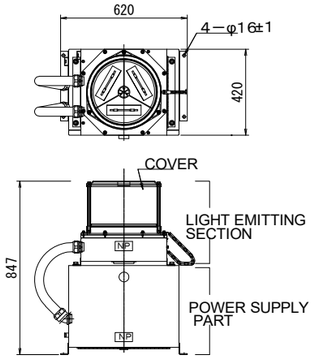


TYPICAL SITTING OF LIGHT

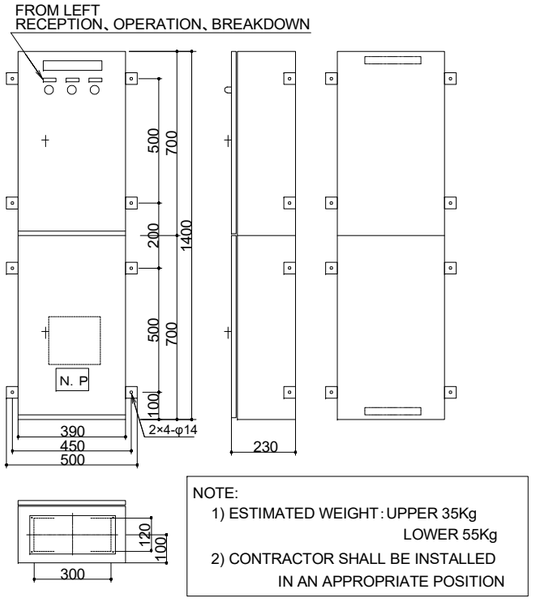


NOTE:
1) ESTIMATED WEIGHT : UPPER 35Kg
LOWER 55Kg
2) CONTRACTOR SHALL BE INSTALLED
IN AN APPROPRIATE POSITION

TYPICAL OUTLINE OF CONTROL PANEL

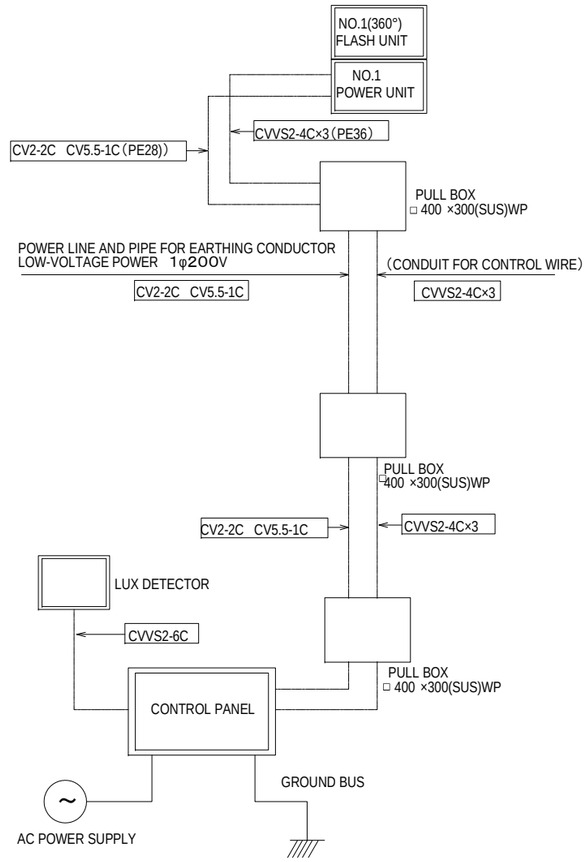


TYPICAL SYSTEM DYAGRAM

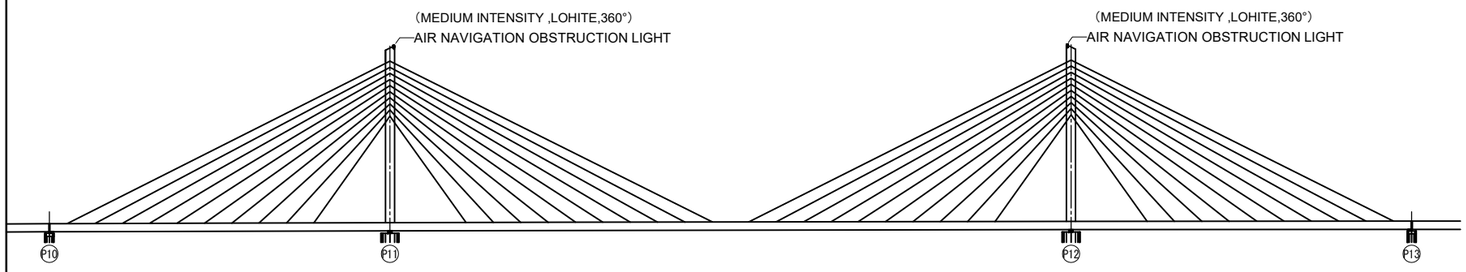


LAYOUT PLAN OF AIR NAVIGATION OBSTRUCTION LIGHT
NTS

| PROJECT NAME | FINANCED BY | COUNTERPART | JICA STUDY TEAM |
|---|---|---|---|
| DETAILED DESIGN ON BAGO RIVER BRIDGE CONSTRUCTION PROJECT | JAPAN INTERNATIONAL COOPERATION AGENCY | REPUBLIC OF THE UNION OF MYANMAR MINISTRY OF CONSTRUCTION DEPARTMENT OF BRIDGE | NIPPON KOEI CO., LTD. ORIENTAL CONSULTANTS GLOBAL CO., LTD. METROPOLITAN EXPRESSWAY COMPANY LIMITED CHODAI CO.,LTD. NIPPON ENGINEERING CONSULTANTS CO.,LTD. |

| | NAME | SIGNATURE | DATE |
|---|---|---|---|
| PREPARED BY | K . MORIMATA | | 29 Sep. 2017 |
| CHECKED BY | T. HAYAKAWA | | 3 Oct. 2017 |
| APPROVED BY | Y. SANO | | 6 Oct. 2017 |

| DRAWING TITLE | PACKAGE |
|---|---|
| (REFERENCE) TYPICAL AVIATION OBSTRUCTION LIGHT PLAN | 1 |
| | DWG No. |
| | P1-EL- 0021 |

# (REFERENCE) TYPICAL ACCESSORIES FOR LIGHTNING PROTECTION SYSTEM

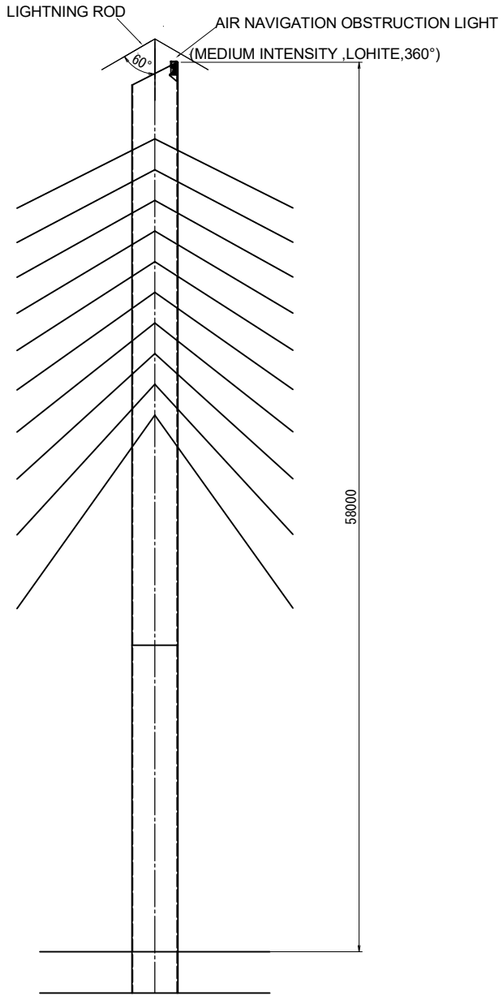


SIDE VIEW
S= 1:400

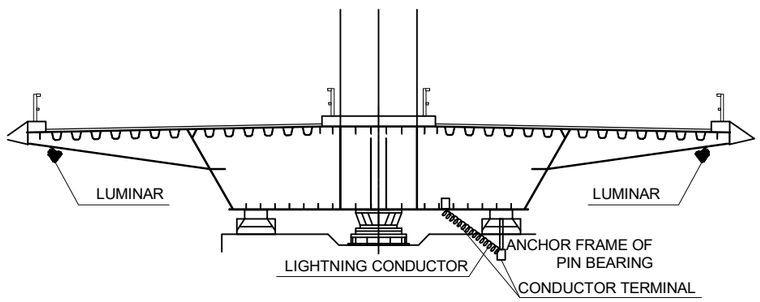


FRONT VIEW
S= 1:200

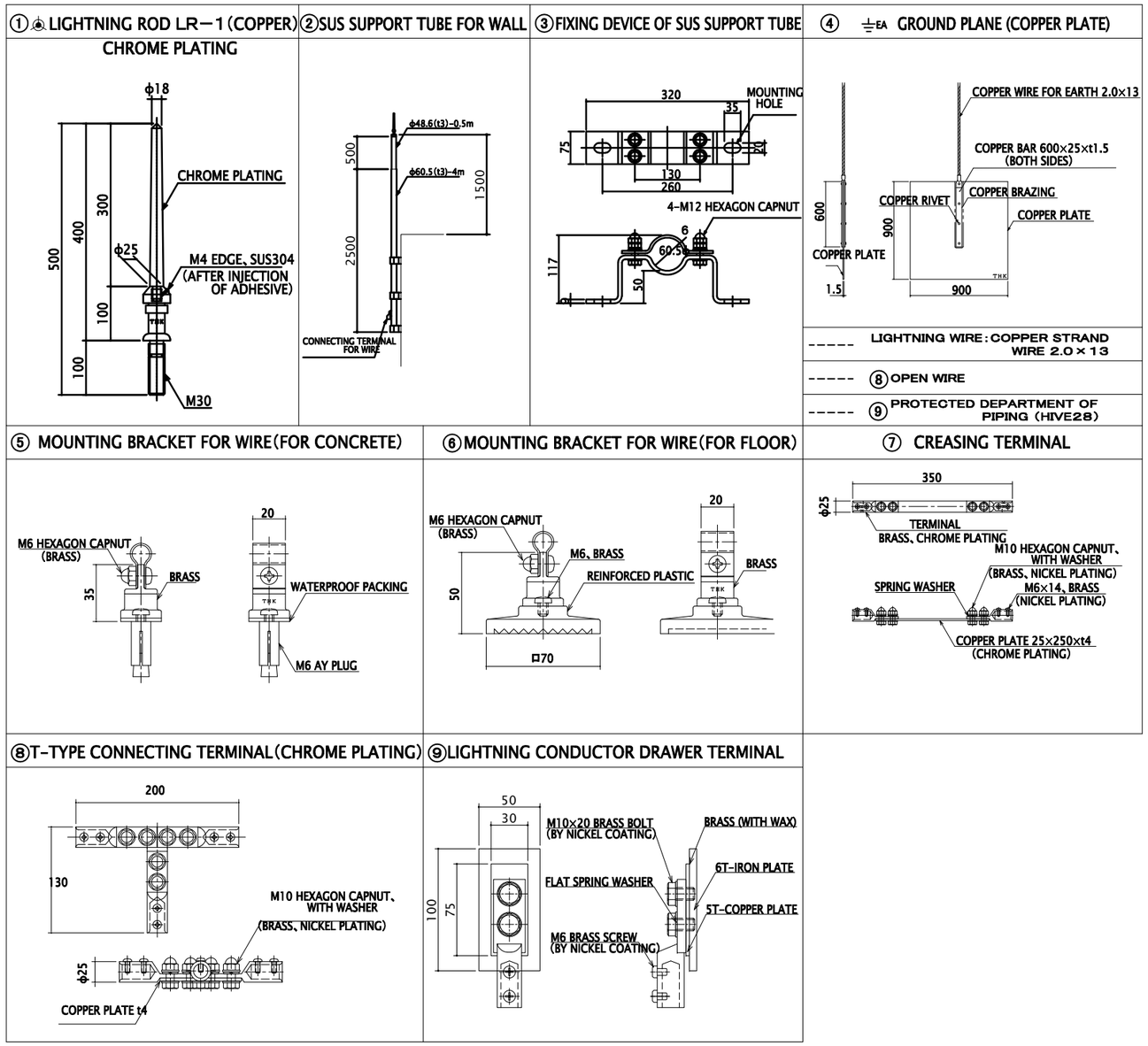


REFERENCE ACCESSORIES FOR LIGHTNING PROTECTION SYSTEM
NTS

| PROJECT NAME | FINANCED BY | COUNTERPART | JICA STUDY TEAM |
|---|---|---|---|
| DETAILED DESIGN ON BAGO RIVER BRIDGE CONSTRUCTION PROJECT | JAPAN INTERNATIONAL COOPERATION AGENCY | REPUBLIC OF THE UNION OF MYANMAR MINISTRY OF CONSTRUCTION DEPARTMENT OF BRIDGE | NIPPON KOEI CO., LTD. ORIENTAL CONSULTANTS GLOBAL CO., LTD. METROPOLITAN EXPRESSWAY COMPANY LIMITED CHODAI CO.,LTD. NIPPON ENGINEERING CONSULTANTS CO.,LTD. |

| | NAME | SIGNATURE | DATE | DRAWING TITLE | PACKAGE |
|---|---|---|---|---|---|
| PREPARED BY | K . MORIMATA | | 29 Sep. 2017 | (REFERENCE) TYPICAL ACCESSORIES FOR LIGHTNING PROTECTION SYSTEM | 1 |
| CHECKED BY | T. HAYAKAWA | | 3 Oct. 2017 | | DWG No. |
| APPROVED BY | Y. SANO | | 6 Oct. 2017 | | P1-EL- 0022 |

# (REFERENCE) CONTROL PANEL FOR OBSTRUCTION LIGHT

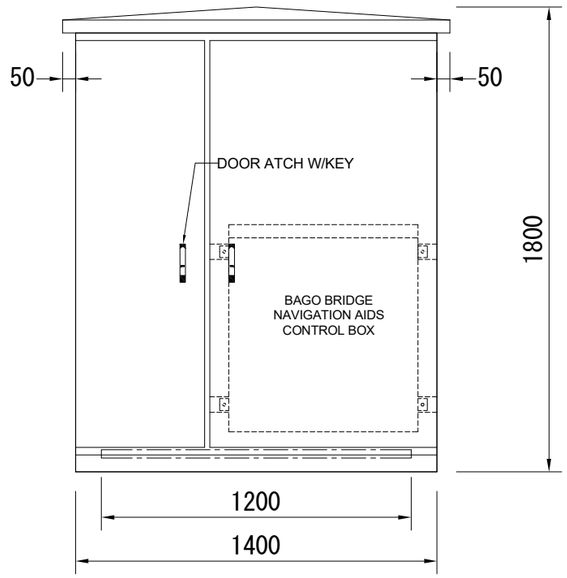


FRONT VIEW

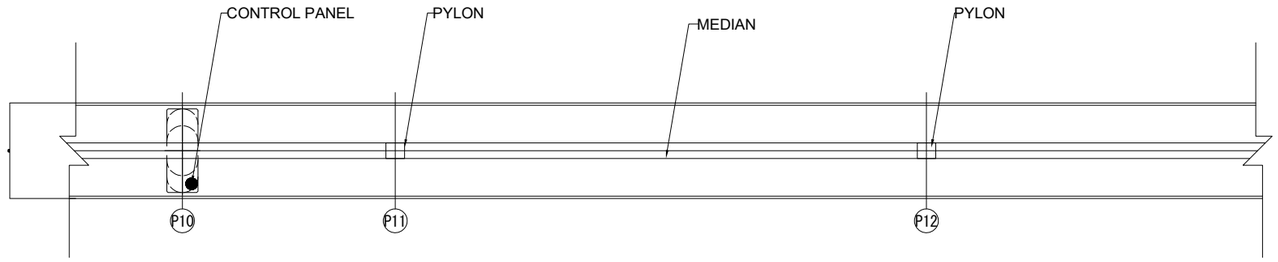


LOCATION PLAN FOR CONTROL PANEL

NTS

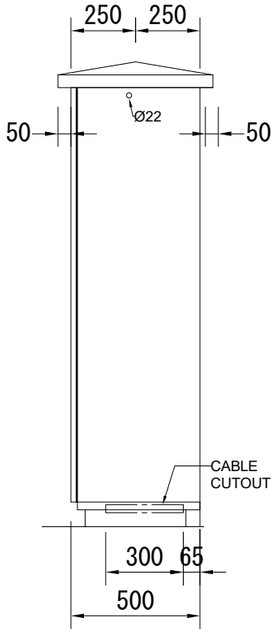


SIDE VIEW

OUTSIDE VIEW OF CONTROL PANEL

NTS

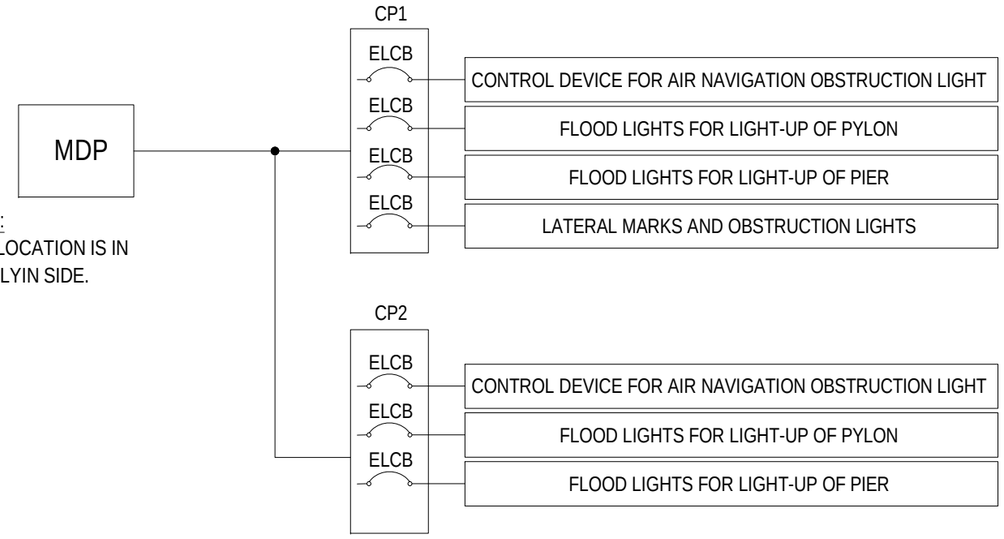


NOTE:
MDP LOCATION IS IN THANLYIN SIDE.

ELCB : Earth Leakage Circuit Breaker

TYPICAL BLOCK DIAGRAM FOR OBSTRUCTION LIGHTS AND LIGHT-UP

NTS

| PROJECT NAME | FINANCED BY | COUNTERPART | JICA STUDY TEAM |
|---|---|---|---|
| DETAILED DESIGN ON BAGO RIVER BRIDGE CONSTRUCTION PROJECT | JAPAN INTERNATIONAL COOPERATION AGENCY | REPUBLIC OF THE UNION OF MYANMAR MINISTRY OF CONSTRUCTION DEPARTMENT OF BRIDGE | NIPPON KOEI CO., LTD. ORIENTAL CONSULTANTS GLOBAL CO., LTD. METROPOLITAN EXPRESSWAY COMPANY LIMITED CHODAI CO.,LTD. NIPPON ENGINEERING CONSULTANTS CO.,LTD. |

| | NAME | SIGNATURE | DATE |
|---|---|---|---|
| PREPARED BY | K . MORIMATA | | 29 Sep. 2017 |
| CHECKED BY | T. HAYAKAWA | | 3 Oct. 2017 |
| APPROVED BY | Y. SANO | | 6 Oct. 2017 |

| DRAWING TITLE | PACKAGE |
|---|---|
| (REFERENCE) CONTROL PANEL FOR OBSTRUCTION LIGHT | 1 |
| | DWG No. |
| | P1-EL- 0023 |

# TYPICAL NAVIGATION LATERAL MARKS AND OBSTRUCTION LIGHT

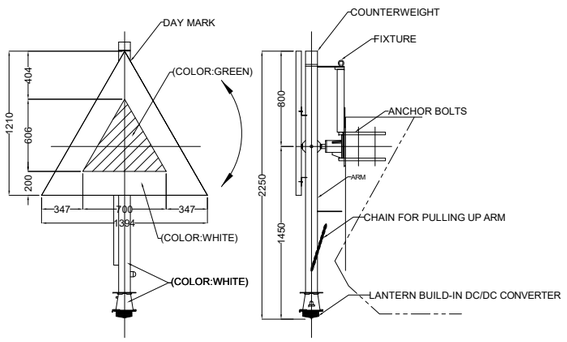


FRONT VIEW SIDE VIEW

SPECIFICATIONS OF BRIDGE LIGHT
<STARBOARD LANTERN>

1. BRIDGE LIGHT BODY
   (a) MODEL : RBL-30R
   (b) MATERIAL(ARM) : ALUMINIUM ALLOY
   (c) MATERIAL(DAYMARK) : ALUMINIUM ALLOY
   (d) HEIGHT OVERALL : APPROX. 2.4m
   (e) FOCAL PLANE HEIGHT : APPROX. 1.5m
   (f) TOTAL MASS : APPROX. 75kg (INCLUDING LANTRN)
   (g) COLOUR(ARM) : WHITE
   (h) COLOR(DAYMARK) : RED AND WHITE

2. LANTERN
   (a) Model : RL - 123
   (b) INPUT VOLTAGE : DC24V
   (c) LIGHT SOURCE : LED
   (d) LENS : POLYCARBONATE
   (e) LIGHT COLOUR : RED
   (f) CHARACTER : FIXED
   (g) EFFECTIVE INTENSITY : 14cd
   (h) LUMINOUS RANGE : 3 N.M. (T=0.74)
   (i) COLOR : WHITE

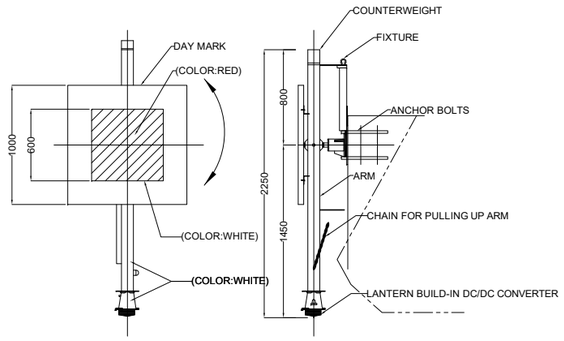


FRONT VIEW SIDE VIEW

SPECIFICATIONS OF BRIDGE LIGHT
<PORT LANTERN>

1. BRIDGE LIGHT BODY
   (a) MODEL : RBL-30L
   (b) MATERIAL(ARM) : ALUMINIUM ALLOY
   (c) MATERIAL(DAYMARK) : ALUMINIUM ALLOY
   (d) HEIGHT OVERALL : APPROX. 2.4m
   (e) FOCAL PLANE HEIGHT : APPROX. 1.5m
   (f) TOTAL MASS : APPROX. 75kg (INCLUDING LANTRN)
   (g) COLOUR(ARM) : WHITE
   (h) COLOR(DAYMARK) : GREEN AND WHITE

2. LANTERN
   (a) Model : RL - 123
   (b) INPUT VOLTAGE : DC24V
   (c) LIGHT SOURCE : LED
   (d) LENS : POLYCARBONATE
   (e) LIGHT COLOUR : GREEN
   (f) CHARACTER : FIXED
   (g) EFFECTIVE INTENSITY : 14cd
   (h) LUMINOUS RANGE : 3 N.M. (T=0.74)
   (i) COLOR : WHITE

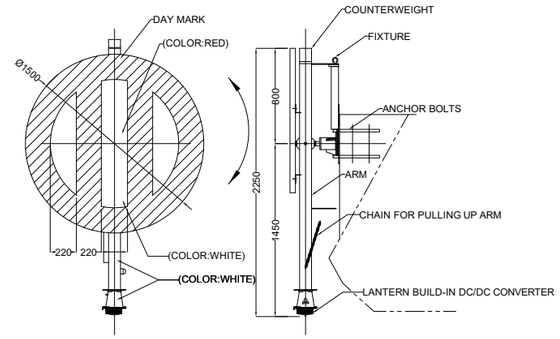


FRONT VIEW SIDE VIEW

SPECIFICATIONS OF BRIDGE LIGHT
<SAFE WATER LANTERN>

1. BRIDGE LIGHT BODY
   (a) MODEL : RBL-30C
   (b) MATERIAL(ARM) : ALUMINIUM ALLOY
   (c) MATERIAL(DAYMARK) : ALUMINIUM ALLOY
   (d) HEIGHT OVERALL : APPROX. 2.4m
   (e) FOCAL PLANE HEIGHT : APPROX. 1.5m
   (f) TOTAL MASS : APPROX. 75kg (INCLUDING LANTRN)
   (g) COLOUR(ARM) : WHITE
   (h) COLOR(DAYMARK) : RED AND WHITE

2. LANTERN
   (a) Model : RL - 123
   (b) INPUT VOLTAGE : DC24V
   (c) LIGHT SOURCE : LED
   (d) LENS : POLYCARBONATE
   (e) LIGHT COLOUR : WHITE
   (f) CHARACTER : FIXED
   (g) EFFECTIVE INTENSITY : 14cd
   (h) LUMINOUS RANGE : 3 N.M. (T=0.74)
   (i) COLOR : WHITE

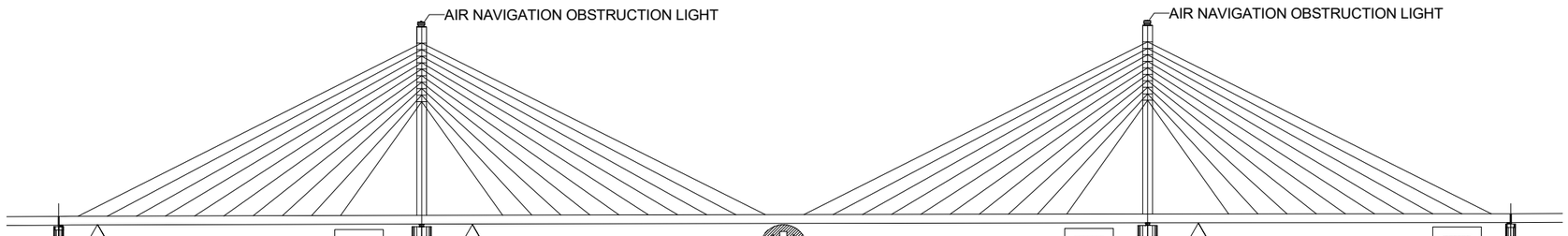


SIDE VIEW

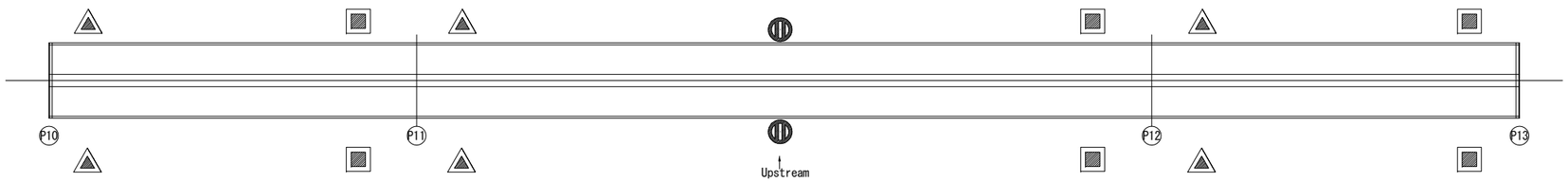


PLAN VIEW

| PROJECT NAME | FINANCED BY | COUNTERPART | JICA STUDY TEAM |
|---|---|---|---|
| DETAILED DESIGN ON BAGO RIVER BRIDGE CONSTRUCTION PROJECT | JAPAN INTERNATIONAL COOPERATION AGENCY | REPUBLIC OF THE UNION OF MYANMAR MINISTRY OF CONSTRUCTION DEPARTMENT OF BRIDGE | NIPPON KOEI CO., LTD. ORIENTAL CONSULTANTS GLOBAL CO., LTD. METROPOLITAN EXPRESSWAY COMPANY LIMITED CHODAI CO.,LTD. NIPPON ENGINEERING CONSULTANTS CO.,LTD. |

| | NAME | SIGNATURE | DATE |
|---|---|---|---|
| PREPARED BY | K . MORIMATA | | 29 Sep. 2017 |
| CHECKED BY | T. HAYAKAWA | | 3 Oct. 2017 |
| APPROVED BY | Y. SANO | | 6 Oct. 2017 |

| DRAWING TITLE | PACKAGE |
|---|---|
| TYPICAL NAVIGATION LATERAL MARKS AND OBSTRUCTION LIGHT | 1 |
| | DWG No. |
| | P1-EL- 0024 |

# TYPICAL SCHEMATIC DIAGRAM

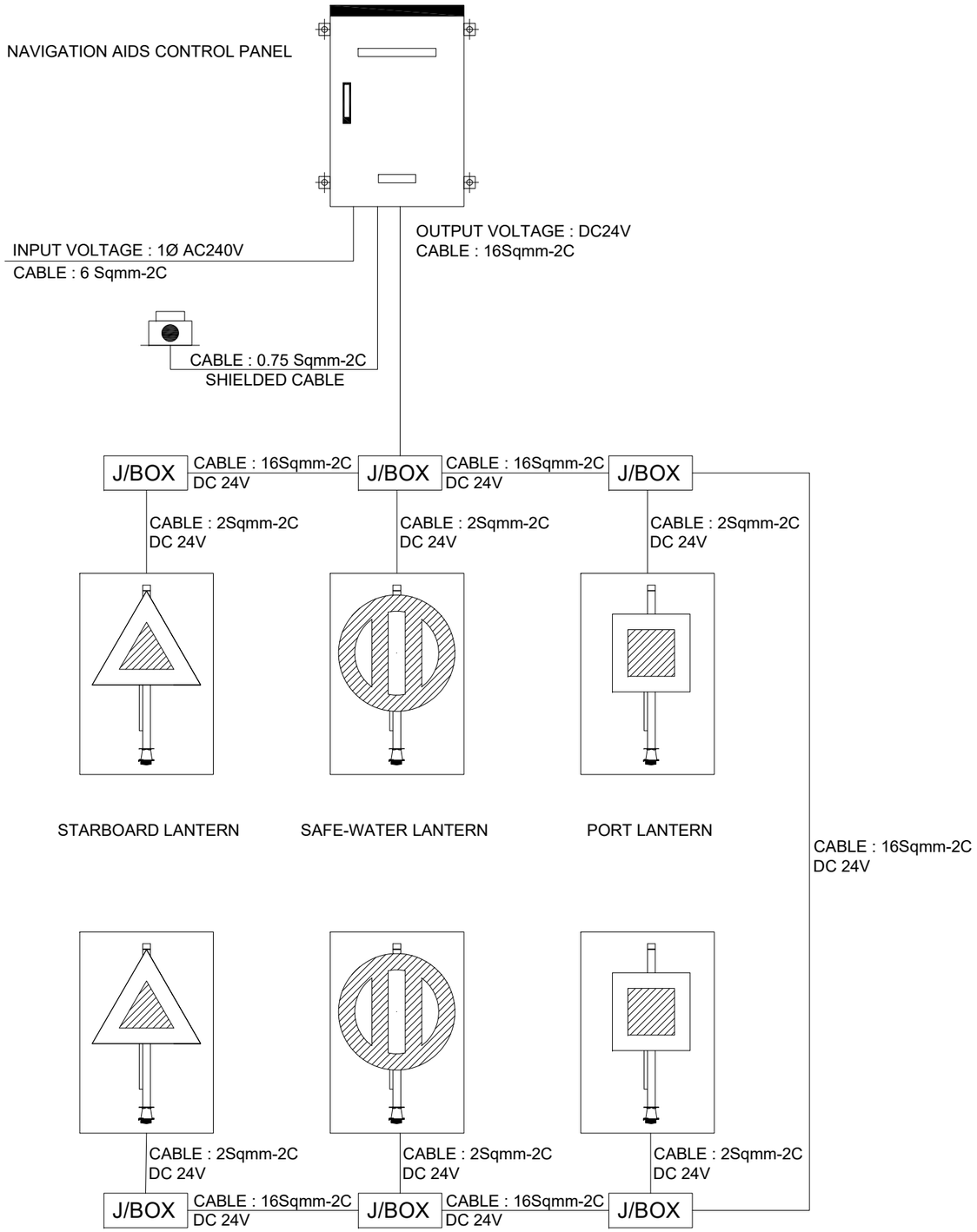


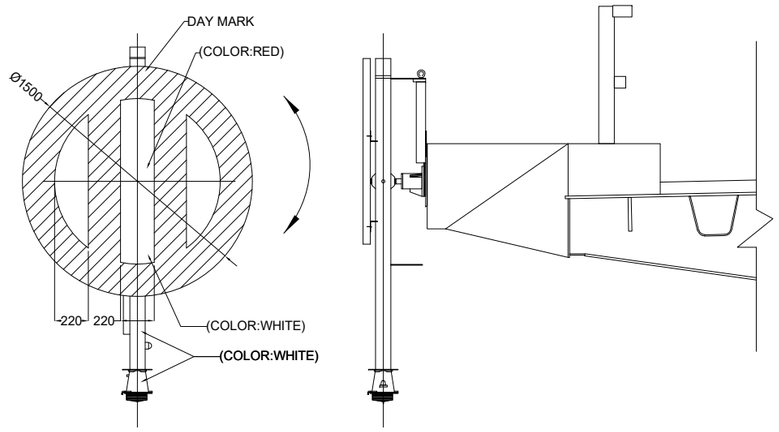


FRONRT VIEW LEFT SIDE VIEW

TYPIACAL INSTALLATION FOR LATERAL REMARKS AND OBSTRUCTION LIGHT

NTS

NOTE:

Operation and maintenance method

1. Insulation resistance test is not allowed at panel circuit.
   Remove all DC circuit, incase of necessity of insulation test
2. Automatic/ Manual selector switch is pull type.
   Prior to operation, pull toward first then turn switch.
3. Off the breaker (MCCB2), prior to replace the battery set.
4. The Photocell sitch is set at 300Lx operated.
5. Equipment transfer is set at 240V /100V.
   The system may not operate at less than 220V of input voltage.
   If so, change the connection terminal (input side) to suitable voltage.
   (the equipment operates from 90V to 110V at output side.)

| PROJECT NAME | FINANCED BY | COUNTERPART | JICA STUDY TEAM |
|---|---|---|---|
| DETAILED DESIGN ON BAGO RIVER BRIDGE CONSTRUCTION PROJECT | JAPAN INTERNATIONAL COOPERATION AGENCY | REPUBLIC OF THE UNION OF MYANMAR MINISTRY OF CONSTRUCTION DEPARTMENT OF BRIDGE | NIPPON KOEI CO., LTD. ORIENTAL CONSULTANTS GLOBAL CO., LTD. METROPOLITAN EXPRESSWAY COMPANY LIMITED CHODAI CO.,LTD. NIPPON ENGINEERING CONSULTANTS CO.,LTD. |

| | NAME | SIGNATURE | DATE | DRAWING TITLE | PACKAGE |
|---|---|---|---|---|---|
| PREPARED BY | K . MORIMATA | | 29 Sep. 2017 | TYPICAL SCHEMATIC DIAGRAM | 1 |
| CHECKED BY | T. HAYAKAWA | | 3 Oct. 2017 | | DWG No. |
| APPROVED BY | Y. SANO | | 6 Oct. 2017 | | P1-EL- 0025 |

# (REFERENCE) TYPICAL FLOOD LIGHT INSTALLATION

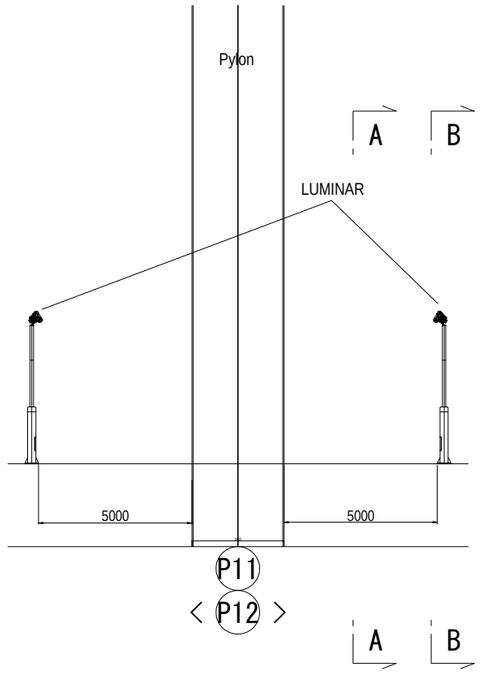


SIDE VIEW
NTS

## POSITION
NTS

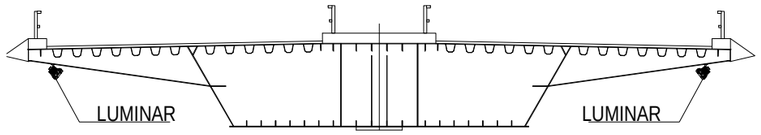


A - A
NTS

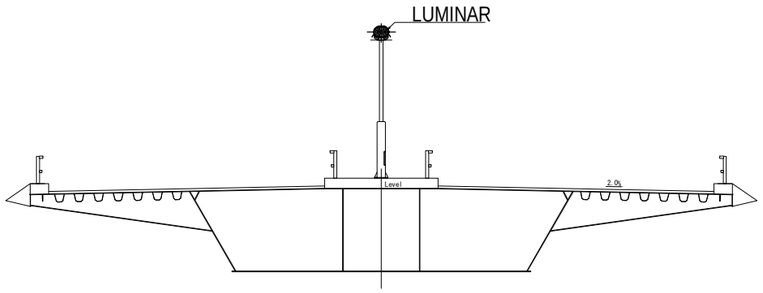


B - B
NTS

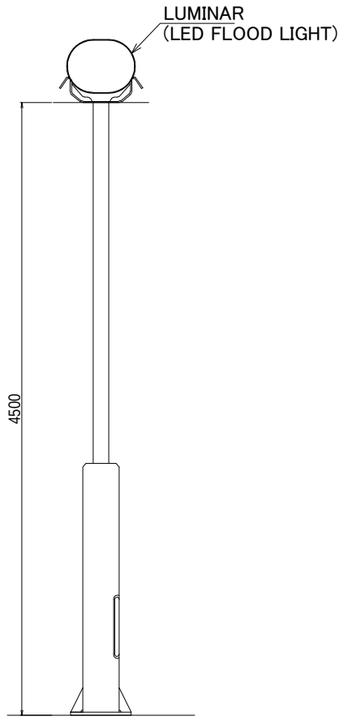


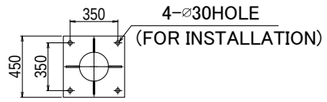


OUTLINE VIEW OF FLOOD LIGHT
NTS

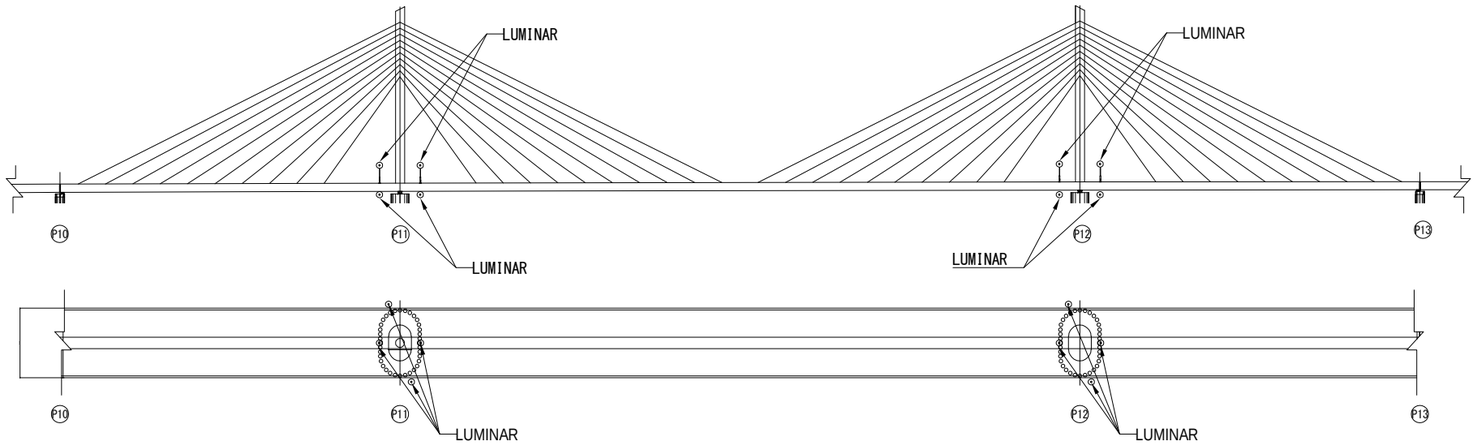


LAYOUT OF ILLUMINATOR
NTS

| PROJECT NAME | FINANCED BY | COUNTERPART | JICA STUDY TEAM |
|---|---|---|---|
| DETAILED DESIGN ON BAGO RIVER BRIDGE CONSTRUCTION PROJECT | JAPAN INTERNATIONAL COOPERATION AGENCY | REPUBLIC OF THE UNION OF MYANMAR MINISTRY OF CONSTRUCTION DEPARTMENT OF BRIDGE | NIPPON KOEI CO., LTD. ORIENTAL CONSULTANTS GLOBAL CO., LTD. METROPOLITAN EXPRESSWAY COMPANY LIMITED CHODAI CO.,LTD. NIPPON ENGINEERING CONSULTANTS CO.,LTD. |

| | NAME | SIGNATURE | DATE |
|---|---|---|---|
| PREPARED BY | K . MORIMATA | | 29 Sep. 2017 |
| CHECKED BY | T. HAYAKAWA | | 3 Oct. 2017 |
| APPROVED BY | Y. SANO | | 6 Oct. 2017 |

| DRAWING TITLE | PACKAGE |
|---|---|
| (REFERENCE) TYPICAL FLOOD LIGHT INSTALLATION | 1 |
| | DWG No. |
| | P1-EL- 0026 |

# (REFERENCE) TYPICAL WIRING PLAN AND LIGHTING PANEL AT P10

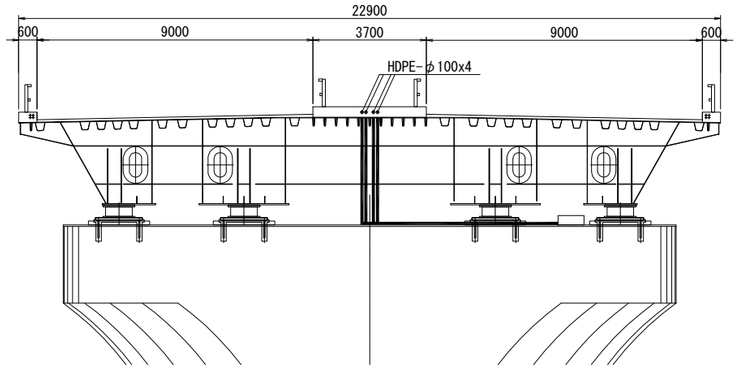


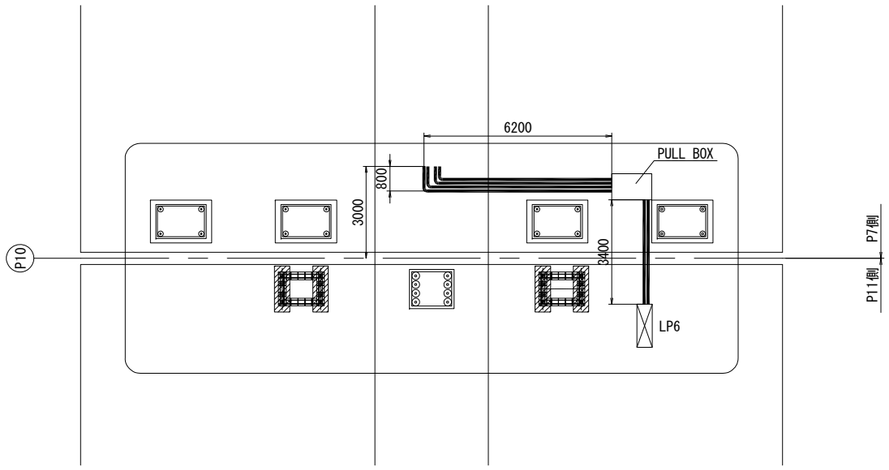


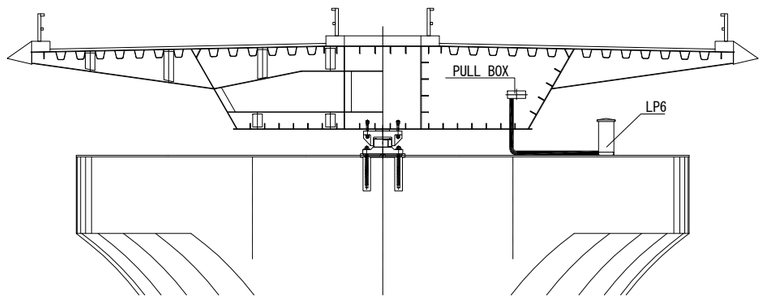


TYPICAL CONCRETE FOUNDATION FOR LIGHTING PANEL

FRONT VIEW

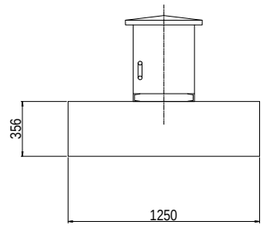


SIDE VIEW

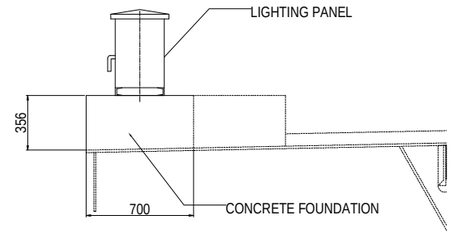


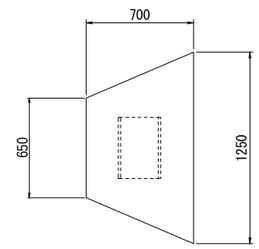


| PROJECT NAME | FINANCED BY | COUNTERPART | JICA STUDY TEAM |
|---|---|---|---|
| DETAILED DESIGN ON BAGO RIVER BRIDGE CONSTRUCTION PROJECT | JAPAN INTERNATIONAL COOPERATION AGENCY | REPUBLIC OF THE UNION OF MYANMAR MINISTRY OF CONSTRUCTION DEPARTMENT OF BRIDGE | NIPPON KOEI CO., LTD. ORIENTAL CONSULTANTS GLOBAL CO., LTD. METROPOLITAN EXPRESSWAY COMPANY LIMITED CHODAI CO.,LTD. NIPPON ENGINEERING CONSULTANTS CO.,LTD. |

| | NAME | SIGNATURE | DATE | DRAWING TITLE | PACKAGE |
|---|---|---|---|---|---|
| PREPARED BY | K . MORIMATA | | 29 Sep. 2017 | (REFERENCE) TYPICAL WIRING PLAN AND LIGHTING PANEL AT P10 | 1 |
| CHECKED BY | T. HAYAKAWA | | 3 Oct. 2017 | | DWG No. |
| APPROVED BY | Y. SANO | | 6 Oct. 2017 | | P1-EL- 0027 |

# QUANTITY TABLE OF LIGHTING AND ELECTRICAL WORKS
# (REFERENCE DRAWING)

QUANTITY OF ROAD LIGHTING SYSTEM

| Item Description | Unit | Total |
|---|---|---|
| Lighting Pole Type B (H=12m,) | No. | 63.0 |
| Lighting Pole Type C (H=9m) | No. | 35.0 |
| LED Lamp (51W) | No. | 35.0 |
| LED Lamp (140W) | No. | 63.0 |
| LED Lamp (380W) | No. | 12.0 |
| HID Lamp (400W) | No. | 5.0 |
| Lighting Panel Type A (17 lines) | No. | 4.0 |
| Lighting Panel Type B (4 lines) | No. | 4.0 |
| Pull Box Type A (300 x 350 x 175) | No, | 112.0 |
| Pull Box Type B (550 x 200 x 600) | No. | 220.0 |
| Pull Box Type C (400 x 300 x 200) | No. | 6.0 |
| Grounding System | No. | 10.0 |
| 4 Core/XLPE 35 sq. mm Electric Wire Cable | m | 1980.0 |
| 4 Core/XLPE 25 sq. mm Electric Wire Cable | m | 2328.0 |
| 4 Core/XLPE 16 sq. mm Electric Wire Cable | m | 1404.0 |
| 4 Core/XLPE 10 sq. mm Electric Wire Cable | m | 3150.0 |
| 4 Core/XLPE 8 sq. mm Electric Wire Cable | m | 4372.0 |
| HDPE Pipe (25mm dia.) | m | 53.0 |
| HDPE Pipe (50mm dia.) | m | 12345.0 |
| HDPE Pipe (100mm dia.) | m | 100.0 |
| FEP Pipe (25mm dia.) | m | 28.0 |
| FEP Pipe (50mm dia.) | m | 207.0 |
| Steel Conduit (10mm dia.) | m | 800.0 |
| Handhole (600 x 600 x 1200) | No. | 2.0 |
| Handhole (600 x 600 x 600) | No. | 12.0 |
| MV Site Substation (6.6kV) | L.S. | 1.0 |
| Warning Light | No. | 1.0 |
| Aviation Obstruction Lights (LED 25W White) | No. | 2.0 |
| Control Panel for Aviation Obstruction Lights | No. | 2.0 |
| CV 0.75sq.mm x 2c | m | 30.0 |
| CV 2.0sq.mm x 2c | m | 95.0 |
| CV 5.5sq.mm x 1c | m | 65.0 |
| CV 6.6sq.mm x 2c | m | 65.0 |
| CV 16sq.mm x 2c | m | 1120.0 |
| CVV 2.0sq.mm x 4c x 3 | m | 65.0 |
| CVV 2.0sq.mm x 6c | m | 20.0 |
| Navigation Lateral Marks (Left) with LED Signal Light | No. | 4.0 |
| Navigation Lateral Marks (Right) with LED Signal Light | No. | 4.0 |
| Navigation Lateral Marks (Centre) with LED Signal Light | No. | 2.0 |
| Control Panel for Navigation Lateral Marks | No. | 1.0 |
| Joint Box (200 x 200 x 150) | No. | 10.0 |
| Lightning Rod | No. | 2.0 |
| Copper Wire (30 sq.mm) | m | 20.0 |
| Drawer Conductor Terminal | No. | 12.0 |
| Connection Conductor Terminal | No. | 4.0 |

QUANTITY OF TRAFFIC SIGNAL CONTROL SYSTEM

| Item Description | Unit | Total |
|---|---|---|
| Traffic Signal Pole | No. | 9.0 |
| Pedestrian Signal Pole | No. | 9.0 |
| Traffic Signal Head | No. | 12.0 |
| Arrow Signal Head | No. | 8.0 |
| Pedestrian Signal Head and Push Button | No. | 18.0 |
| Handhole (600 x 600 x 800) | No. | 15.0 |
| Traffic Signal Controller | No. | 1.0 |
| HDPE Pipe (50mm dia.) | m | 309.0 |
| HDPE Pipe (25mm dia.) | m | 208.0 |
| SVV-SS 2.0sq.mm x 4c | m | 77.0 |
| SVV-SS 2.0sq.mm x 15c | m | 157.0 |
| SVV-SS 2.0sq.mm x 18c | m | 69.0 |
| SVV-SS 2.0sq.mm x 21c | m | 32.0 |
| SVV-SS 2.0sq.mm x 33c | m | 10.0 |
| SVV-2.0sq.mm x 4c | m | 302.0 |
| SVV-2.0sq.mm x 8c | m | 162.0 |

# H. REFERENCE DRAWING

# (REFERENCE) GENERAL LAYOUT OF CONSTRUCTION YARD

S=1:2000

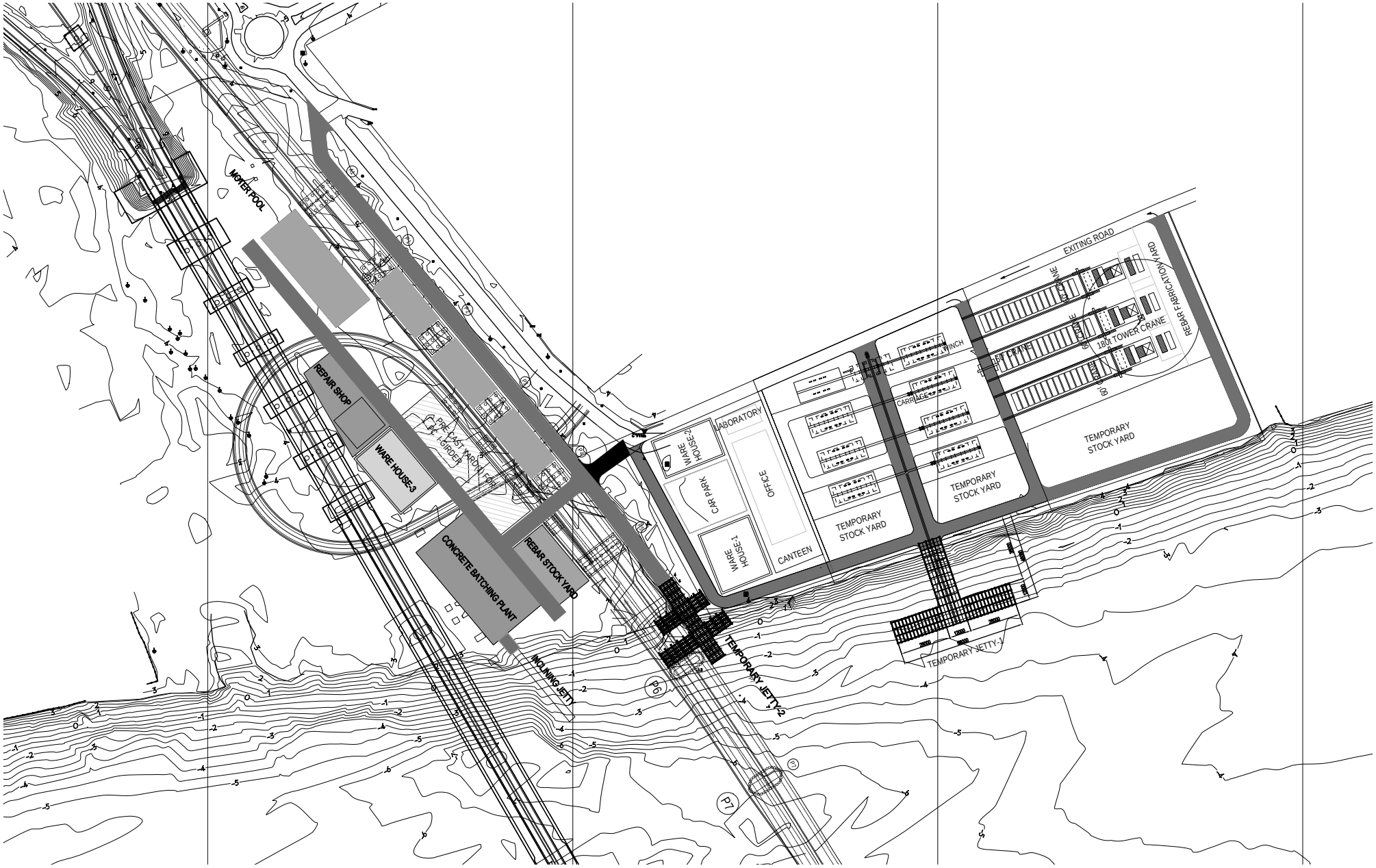


| PROJECT NAME | FINANCED BY | COUNTERPART | JICA STUDY TEAM |
|---|---|---|---|
| DETAILED DESIGN ON BAGO RIVER BRIDGE CONSTRUCTION PROJECT | JAPAN INTERNATIONAL COOPERATION AGENCY | REPUBLIC OF THE UNION OF MYANMAR MINISTRY OF CONSTRUCTION DEPARTMENT OF BRIDGE | NIPPON KOEI CO., LTD. ORIENTAL CONSULTANTS GLOBAL CO., LTD. METROPOLITAN EXPRESSWAY COMPANY LIMITED CHODAI CO.,LTD. NIPPON ENGINEERING CONSULTANTS CO.,LTD. |

| | NAME | SIGNATURE | DATE |
|---|---|---|---|
| PREPARED BY | T. ICHIKAWA | 市川敏夫 | 15 Jun.2017 |
| CHECKED BY | T. HAYAKAWA | 早川知邦 | 20 Jun.2017 |
| APPROVED BY | Y. SANO | 佐野祐一 | 21 Jun.2017 |

| DRAWING TITLE | PACKAGE |
|---|---|
| (REFERENCE) GENERAL LAYOUT OF CONSTRUCTION YARD | 1 |
| | DWG No. |
| | P1-REF-0001 |

# (REFERENCE) NAVIGATION CONTROL PLAN (1)

S=1:6000

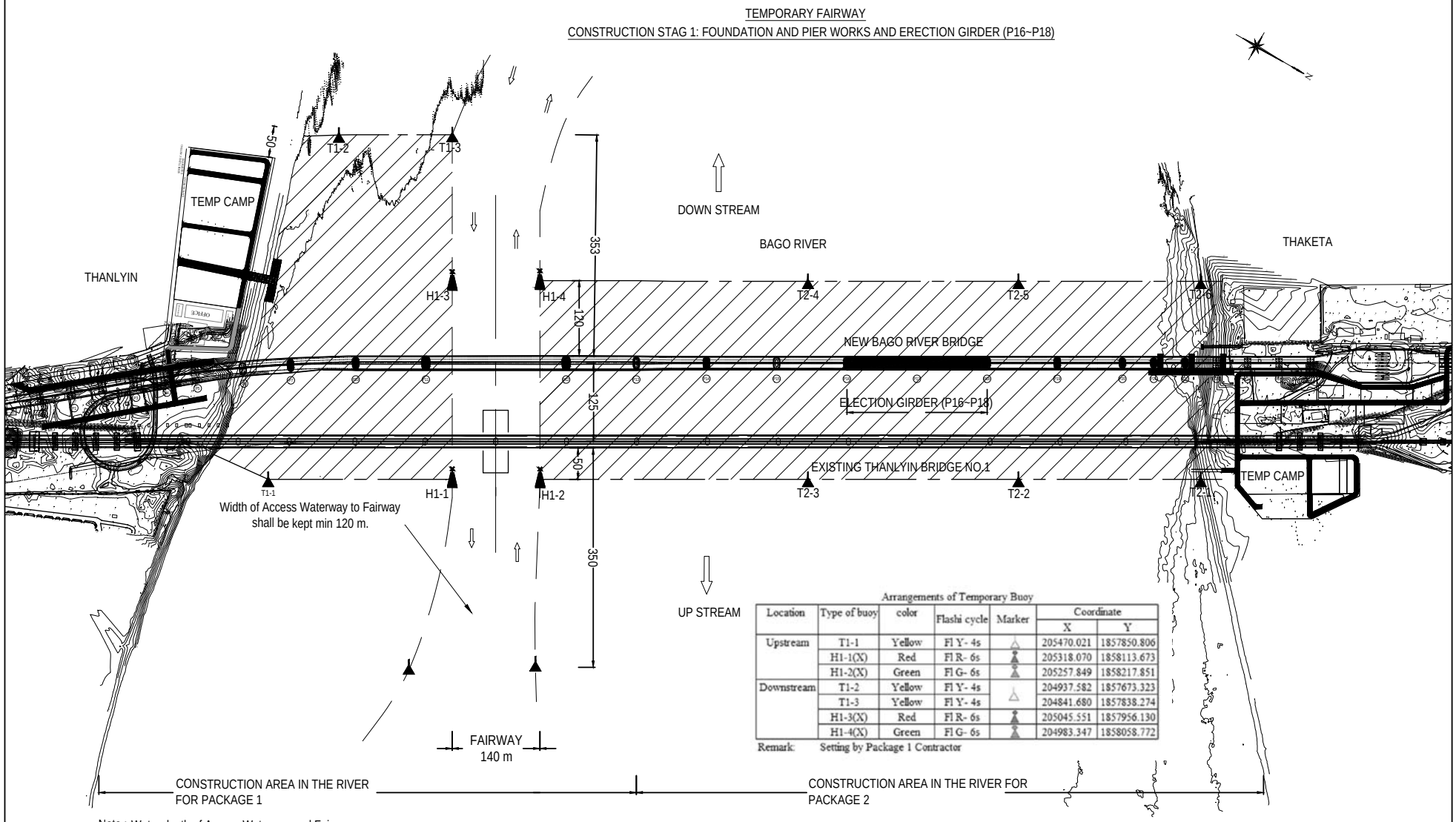


Arrangements of Temporary Buoy

| Location | Type of buoy | color | Flashi cycle | Marker | Coordinate | |
|---|---|---|---|---|---|---|
| | | | | | X | Y |
| Upstream | T1-1 | Yellow | Fl Y- 4s | | 205470.021 | 1857850.806 |
| | H1-1(X) | Red | Fl R- 6s | | 205318.070 | 1858113.673 |
| | H1-2(X) | Green | Fl G- 6s | | 205257.849 | 1858217.851 |
| Downstream | T1-2 | Yellow | Fl Y- 4s | | 204937.582 | 1857673.323 |
| | T1-3 | Yellow | Fl Y- 4s | | 204841.680 | 1857838.274 |
| | H1-3(X) | Red | Fl R- 6s | | 205045.551 | 1857956.130 |
| | H1-4(X) | Green | Fl G- 6s | | 204983.347 | 1858058.772 |

Remark: Setting by Package 1 Contractor

Note : Water depth of Access Waterway and Fairway shall be kept min 5.0 m depth.

| PROJECT NAME | FINANCED BY | COUNTERPART | JICA STUDY TEAM |
|---|---|---|---|
| DETAILED DESIGN ON BAGO RIVER BRIDGE CONSTRUCTION PROJECT | JAPAN INTERNATIONAL COOPERATION AGENCY | REPUBLIC OF THE UNION OF MYANMAR MINISTRY OF CONSTRUCTION DEPARTMENT OF BRIDGE | NIPPON KOEI CO., LTD. ORIENTAL CONSULTANTS GLOBAL CO., LTD. METROPOLITAN EXPRESSWAY COMPANY LIMITED CHODAI CO.,LTD. NIPPON ENGINEERING CONSULTANTS CO.,LTD. |

| | NAME | SIGNATURE | DATE |
|---|---|---|---|
| PREPARED BY | T. ICHIKAWA | | 15 Jun.2017 |
| CHECKED BY | T. HAYAKAWA | | 20 Jun.2017 |
| APPROVED BY | Y. SANO | | 21 Jun.2017 |

| DRAWING TITLE | PACKAGE |
|---|---|
| (REFERENCE) NAVIGATION CONTROL PLAN (1) | 1 |
| | DWG No. |
| | P1-REF-0002 |

# (REFERENCE) NAVIGATION CONTROL PLAN (2)

S=1:6000

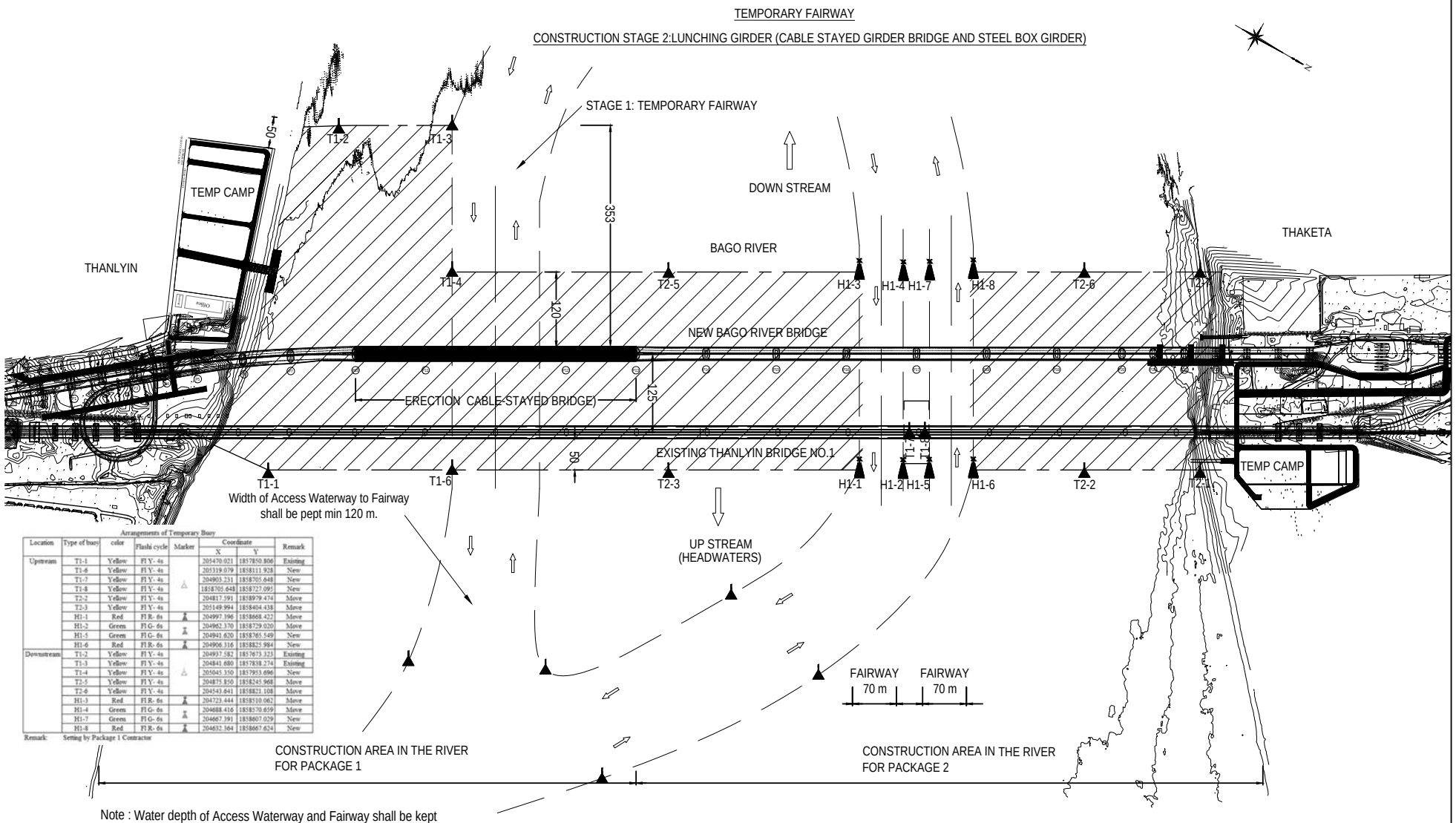


Arrangements of Temporary Buoy

| Location | Type of buoy | color | Flashi cycle | Marker | Coordinate X | Coordinate Y | Remark |
|---|---|---|---|---|---|---|---|
| Upstream | T1-1 | Yellow | FlY- 4s | △ | 205470.021 | 1857850.806 | Existing |
| | T1-6 | Yellow | FlY- 4s | | 205319.079 | 1858111.928 | New |
| | T1-7 | Yellow | FlY- 4s | | 204903.231 | 1858705.648 | New |
| | T1-8 | Yellow | FlY- 4s | | 1858705.648 | 1858727.095 | New |
| | T2-2 | Yellow | FlY- 4s | | 204817.591 | 185897 9.474 | Move |
| | T2-3 | Yellow | FlY- 4s | | 205149.994 | 1858404.438 | Move |
| | H1-1 | Red | FlR- 6s | ▲ | 204997.396 | 1858668.422 | Move |
| | H1-2 | Green | FlG- 6s | ▲ | 204962.370 | 1858729.020 | Move |
| | H1-5 | Green | FlG- 6s | | 204941.620 | 1858765.549 | New |
| | H1-6 | Red | FlR- 6s | ▲ | 204906.316 | 1858825.984 | New |
| Downstream | T1-2 | Yellow | FlY- 4s | △ | 204937.582 | 1857673.323 | Existing |
| | T1-3 | Yellow | FlY- 4s | | 204841.680 | 1857838.274 | Existing |
| | T1-4 | Yellow | FlY- 4s | | 205045.350 | 1857953.696 | New |
| | T2-5 | Yellow | FlY- 4s | | 204875.850 | 1858245.968 | Move |
| | T2-6 | Yellow | FlY- 4s | | 204543.641 | 1858821.108 | Move |
| | H1-3 | Red | FlR- 6s | ▲ | 204723.444 | 1858510.062 | Move |
| | H1-4 | Green | FlG- 6s | ▲ | 204688.416 | 1858570.659 | Move |
| | H1-7 | Green | FlG- 6s | | 204667.391 | 1858607.029 | New |
| | H1-8 | Red | FlR- 6s | ▲ | 204632.364 | 1858667.624 | New |

Remark: Setting by Package 1 Contractor

Note : Water depth of Access Waterway and Fairway shall be kept min 5.0 m depth.

| PROJECT NAME | FINANCED BY | COUNTERPART | JICA STUDY TEAM |
|---|---|---|---|
| DETAILED DESIGN ON BAGO RIVER BRIDGE CONSTRUCTION PROJECT | JAPAN INTERNATIONAL COOPERATION AGENCY | REPUBLIC OF THE UNION OF MYANMAR MINISTRY OF CONSTRUCTION DEPARTMENT OF BRIDGE | NIPPON KOEI CO., LTD. ORIENTAL CONSULTANTS GLOBAL CO., LTD. METROPOLITAN EXPRESSWAY COMPANY LIMITED CHODAI CO.,LTD. NIPPON ENGINEERING CONSULTANTS CO.,LTD. |

| | NAME | SIGNATURE | DATE |
|---|---|---|---|
| PREPARED BY | T. ICHIKAWA | 市川敏夫 | 15 Jun.2017 |
| CHECKED BY | T. HAYAKAWA | 早川知郎 | 20 Jun.2017 |
| APPROVED BY | Y. SANO | 佐野裕一 | 21 Jun.2017 |

| DRAWING TITLE | PACKAGE |
|---|---|
| (REFERENCE) NAVIGATION CONTROL PLAN (2) | 1 |
| | DWG No. |
| | P1-REF-0003 |

# (REFERENCE) CONSTRUCTION SEQUENCE OF CABLE STAYED BRIDGE

S=1:4000

STEP 1

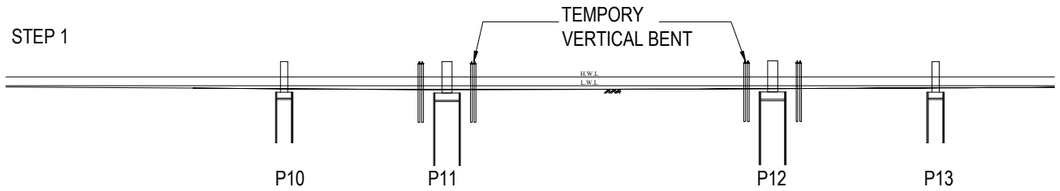


• Construct Piers P10 and P13.

STEP 2

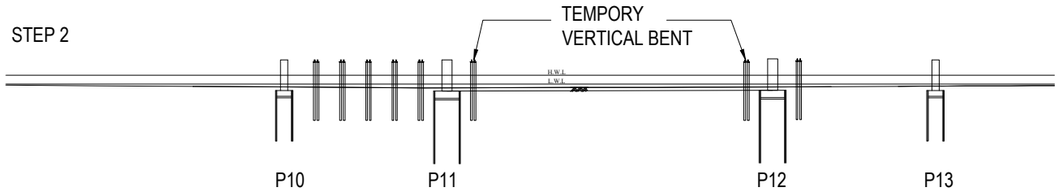


• Temporary Vertical bents are attached to the tower piers.

STEP 3

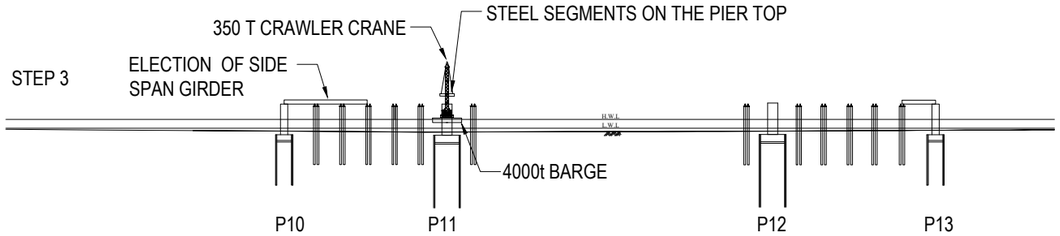


• Erect side span girder by 350 T Crawler Crane.

• Temporary supports are attached to the tower piers.

• Steel segment on the pier top are erected by 350 T Crawler crane.

STEP 4

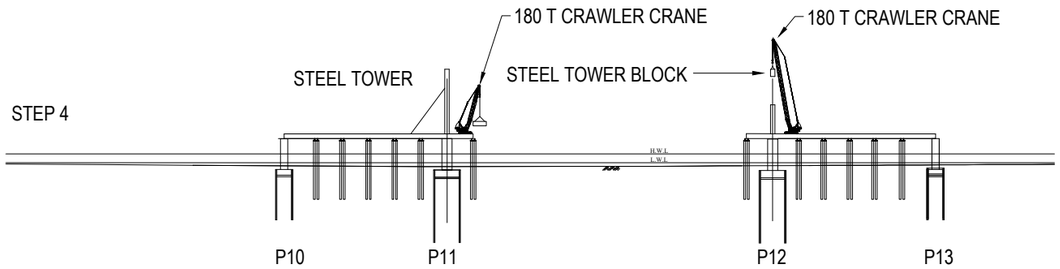


• After side span steel girder segment is conected to pier top steel girder segment.

• 180T Crawler Crane are mounted on the girder deck.

• Construct Steel Towers on Pier 11and 12 are constructed.

STEP 5

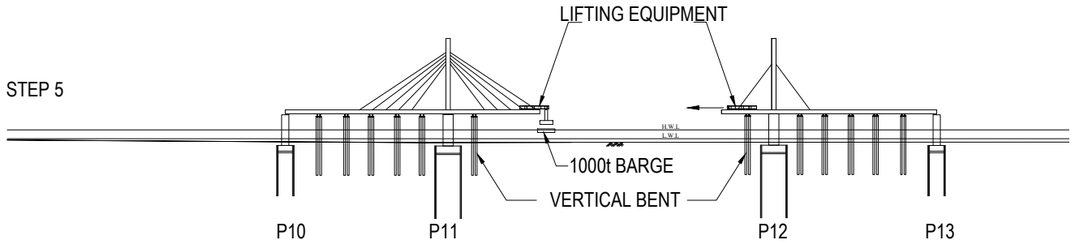


• Install stay cable to the girder segment.

• Erect a steel girder block with cantilever method using stay cables by Lifting Equipment on the deck.

STEP 6

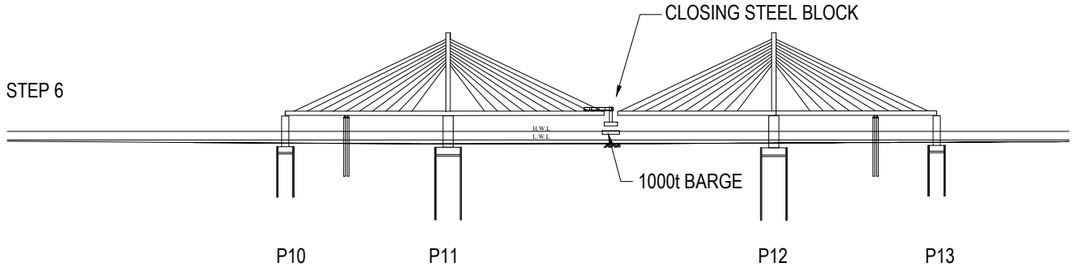


• Remain one temporary bent and others are removed.

• Finally closing steel blocks are erected by lifting equitment using Set-backing method.

STEP 7

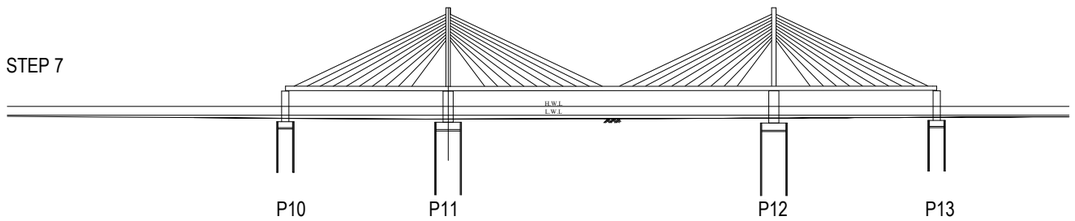


• Erection is completed.

| PROJECT NAME | FINANCED BY | COUNTERPART | JICA STUDY TEAM |
|---|---|---|---|
| DETAILED DESIGN ON BAGO RIVER BRIDGE CONSTRUCTION PROJECT | JAPAN INTERNATIONAL COOPERATION AGENCY | REPUBLIC OF THE UNION OF MYANMAR MINISTRY OF CONSTRUCTION DEPARTMENT OF BRIDGE | NIPPON KOEI CO., LTD. ORIENTAL CONSULTANTS GLOBAL CO., LTD. METROPOLITAN EXPRESSWAY COMPANY LIMITED CHODAI CO.,LTD. NIPPON ENGINEERING CONSULTANTS CO.,LTD. |

| | NAME | SIGNATURE | DATE |
|---|---|---|---|
| PREPARED BY | T. ICHIKAWA | 市川敏夫 | 15 Jun.2017 |
| CHECKED BY | T. HAYAKAWA | 平川知彦 | 20 Jun.2017 |
| APPROVED BY | Y. SANO | 佐野雅一 | 21 Jun.2017 |

| DRAWING TITLE | PACKAGE |
|---|---|
| (REFERENCE) CONSTRUCTION SEQUENCE OF CABLE STAYED BRIDGE | 1 |
| | DWG No. |
| | P1-REF-0004 |

# (REFERENCE) CONSTRUCTION SEQUENCE OF CONTINUOUS STEEL BOX GIRDER

S=1:2000

Step -1

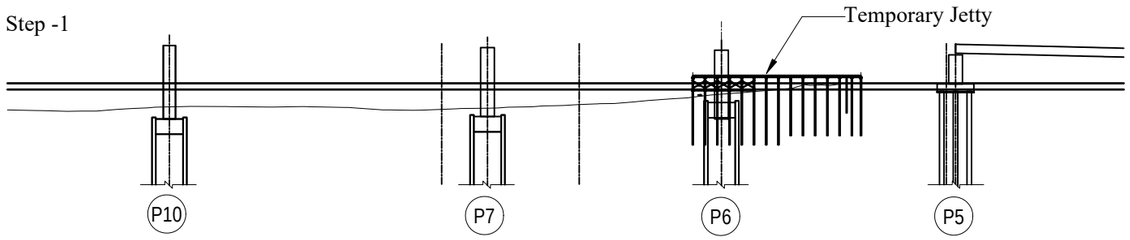


- Installation of temporary jetty between P5 and P6.

Step -2

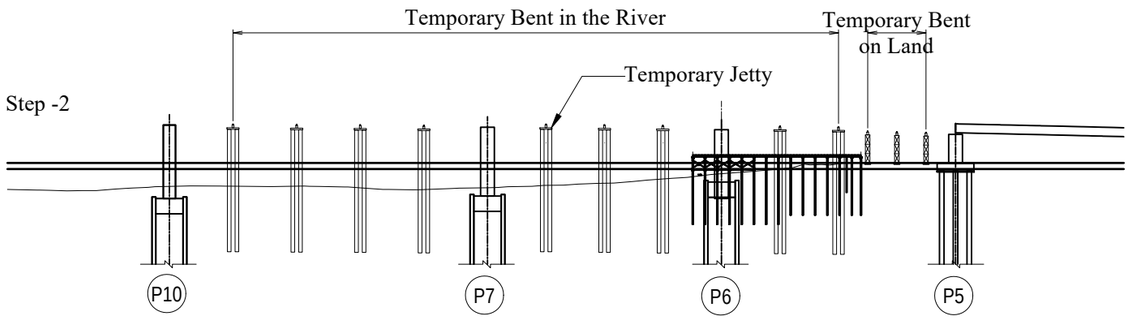


- Installation of temporary bents in the river and on land.

Step -3

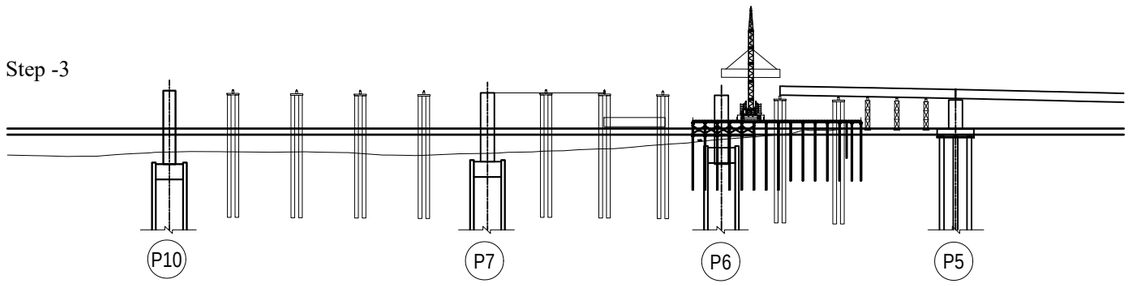


- Girder blocks between P5 and P6 erect using 200t Crawler Crane on land and temporary jetty.

Step -4

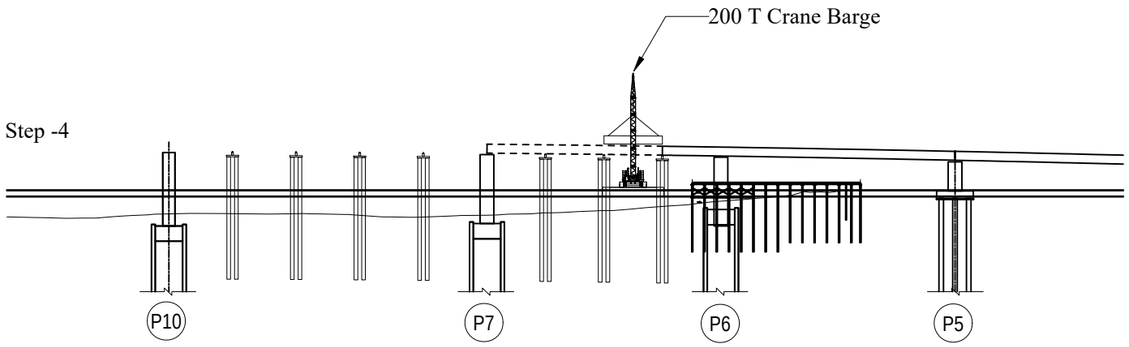


- Girder blocks between P6 and P7 erect using 200t Crane Barge.

Step -5

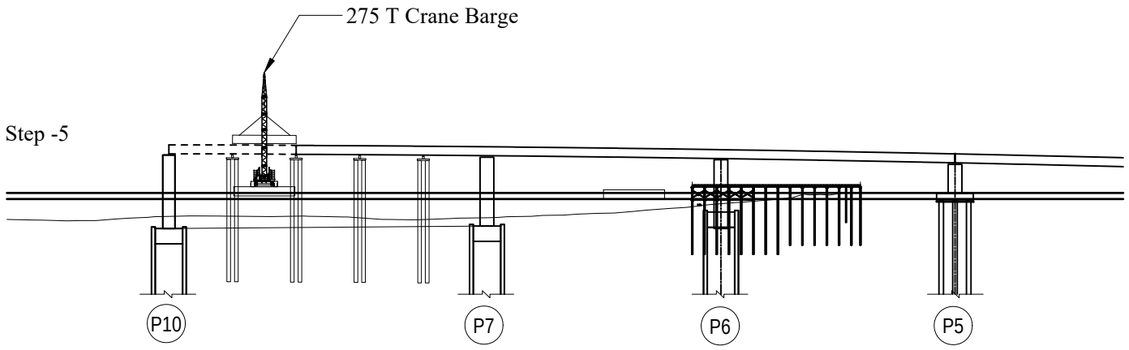


- Girder blocks between P7 and P10 erects using 275t Crane Barge.

Step -6

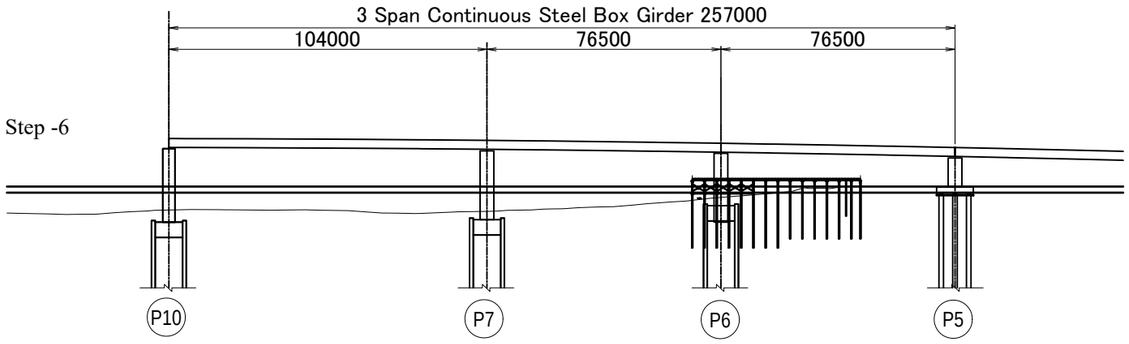


- After erection all girder blocks, all temporary bents are removed.
- Completed.

| PROJECT NAME | FINANCED BY | COUNTERPART | JICA STUDY TEAM |
|---|---|---|---|
| DETAILED DESIGN ON BAGO RIVER BRIDGE CONSTRUCTION PROJECT | JAPAN INTERNATIONAL COOPERATION AGENCY | REPUBLIC OF THE UNION OF MYANMAR MINISTRY OF CONSTRUCTION DEPARTMENT OF BRIDGE | NIPPON KOEI CO., LTD. ORIENTAL CONSULTANTS GLOBAL CO., LTD. METROPOLITAN EXPRESSWAY COMPANY LIMITED CHODAI CO.,LTD. NIPPON ENGINEERING CONSULTANTS CO.,LTD. |

| | NAME | SIGNATURE | DATE |
|---|---|---|---|
| PREPARED BY | T. ICHIKAWA | 市川敏夫 | 15 Jun.2017 |
| CHECKED BY | T. HAYAKAWA | 早川知邦 | 20 Jun.2017 |
| APPROVED BY | Y. SANO | 佐野裕一 | 21 Jun.2017 |

| DRAWING TITLE | PACKAGE |
|---|---|
| (REFERENCE) CONSTRUCTION SEQUENCE OF CONTINUOUS STEEL BOX GIRDER | 1 |
| | DWG No. |
| | P1-REF-0005 |

# (REFERENCE) CONSTRUCTION SEQUENCE OF CONTINUOUS PC BOX GIRDER

S=1:2000

STEP 1

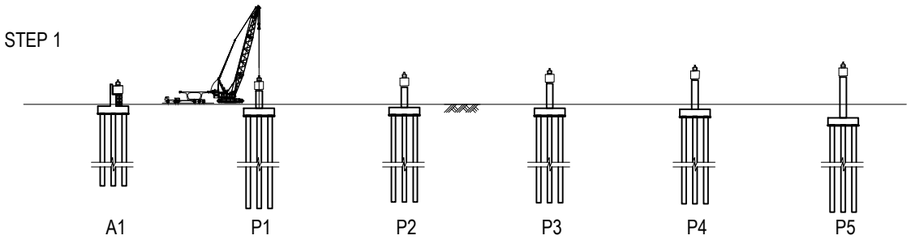


- In advance of segment erection, bearing shoes are set on abutment and piers. Pier head segments are erected by 200t crawler crane and fixed by PC bars.

STEP 2

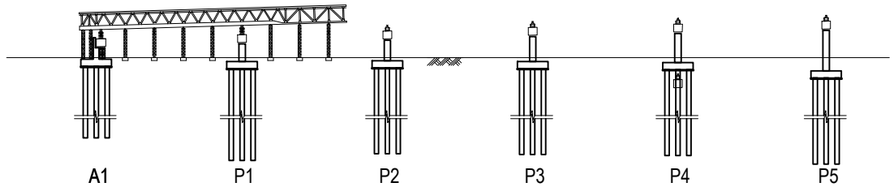


- For assembling of erection girder, temporary bent are installed. The erection girder and erection apparatus are set in designated position and girder support fixed on the pier head segment.

STEP 3

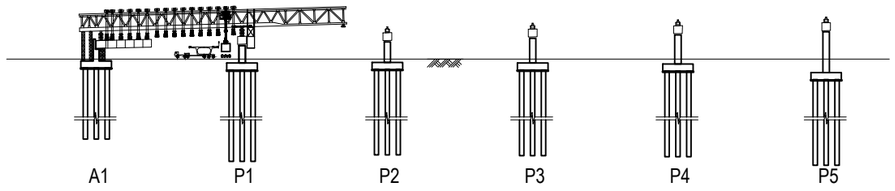


- Pre-cast segments are transported by trailer under the erection girder and lifted by electric hoist and moved the setting position. The segment transfers the load to temporary hanging beam and adjusts the slope and gradient by jack.

STEP 4

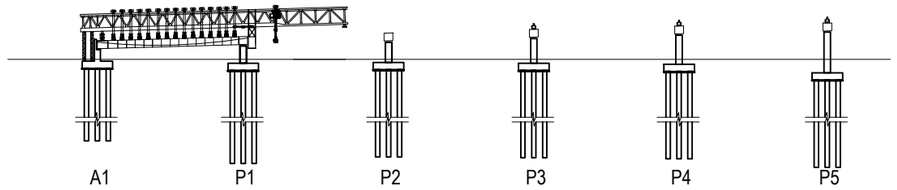


- After all segment are suspended at the designed position, epoxy adhesive applies to the segment which is pulling and connected by PC bars. Mortal is placed in wet joints at both sides. Permanent inner and external tendons for span are installed and tensioned by hydraulic jack.

STEP 5

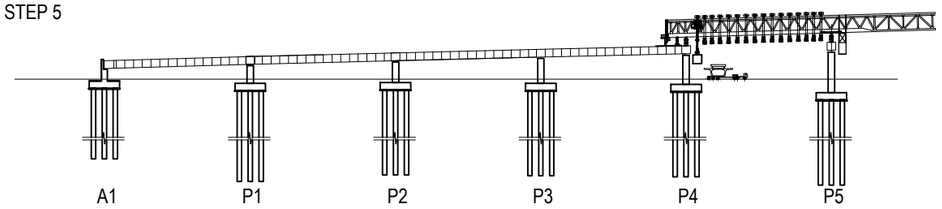


- After completion of one span erection sequence, erection girder advances to next span and erects segments in the same procedure up to Pier 5.

STEP 6

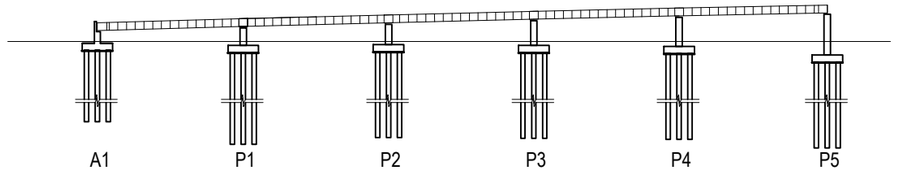


- Demolition of erection girder and then completion.

| PROJECT NAME | FINANCED BY | COUNTERPART | JICA STUDY TEAM |
|---|---|---|---|
| DETAILED DESIGN ON BAGO RIVER BRIDGE CONSTRUCTION PROJECT | JAPAN INTERNATIONAL COOPERATION AGENCY | REPUBLIC OF THE UNION OF MYANMAR<br>MINISTRY OF CONSTRUCTION<br>DEPARTMENT OF BRIDGE | NIPPON KOEI CO., LTD.<br>ORIENTAL CONSULTANTS GLOBAL CO., LTD.<br>METROPOLITAN EXPRESSWAY COMPANY LIMITED<br>CHODAI CO.,LTD.<br>NIPPON ENGINEERING CONSULTANTS CO.,LTD. |

| | NAME | SIGNATURE | DATE |
|---|---|---|---|
| PREPARED BY | T. ICHIKAWA | 市川敏夫 | 15 Jun.2017 |
| CHECKED BY | T. HAYAKAWA | 早川知邦 | 20 Jun.2017 |
| APPROVED BY | Y. SANO | 佐野裕一 | 21 Jun.2017 |

| DRAWING TITLE | PACKAGE |
|---|---|
| (REFERENCE) CONSTRUCTION SEQUENCE OF CONTINUOUS PC BOX GIRDER | 1 |
| | DWG No. |
| | P1-REF-0006 |

# (REFERENCE) DIVERSION OF EXISTING TRAFFIC DURING CONSTRUCTION OF INTERSECTION

S=1:2000

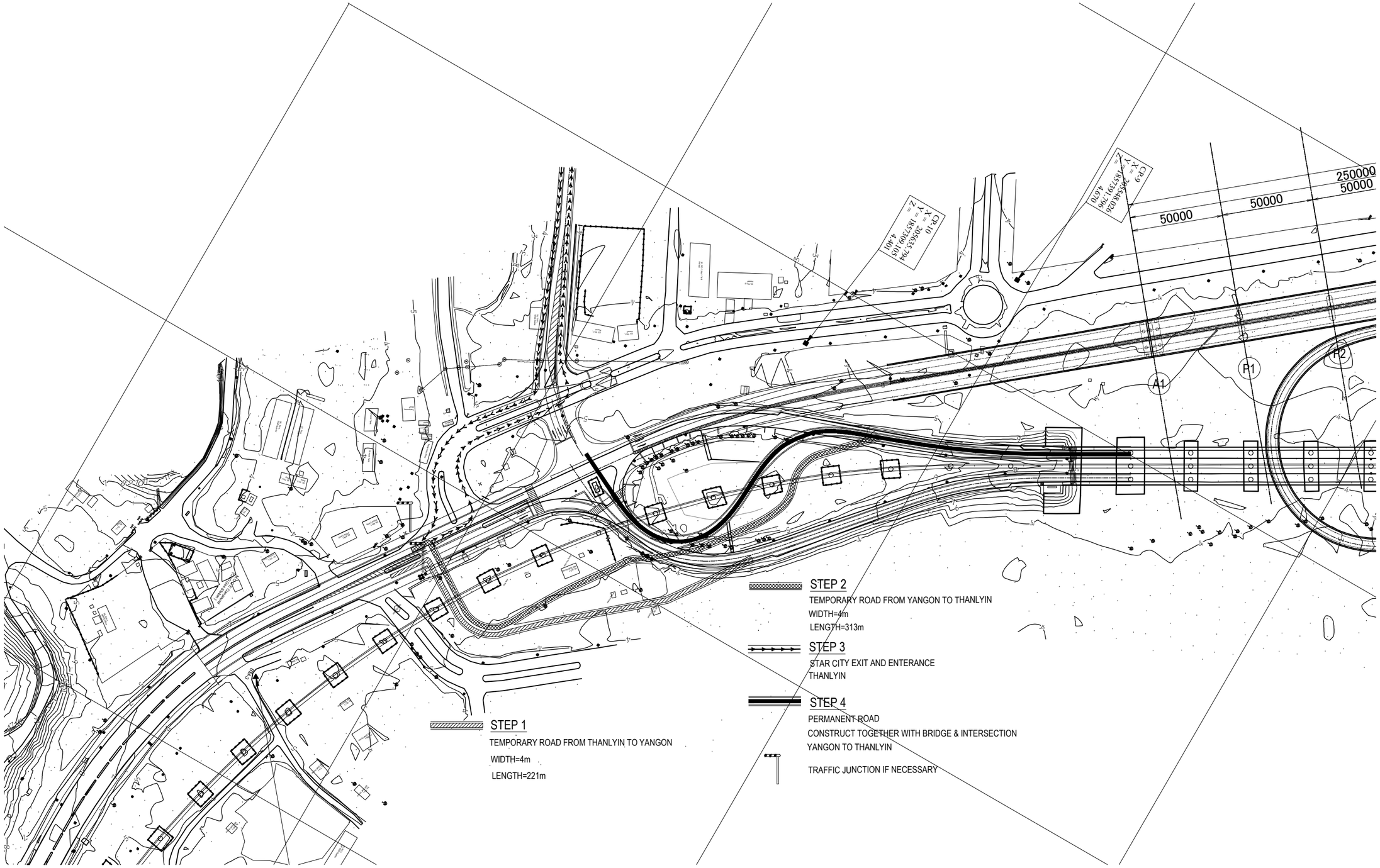


| PROJECT NAME | FINANCED BY | COUNTERPART | JICA STUDY TEAM |
|---|---|---|---|
| DETAILED DESIGN ON BAGO RIVER BRIDGE CONSTRUCTION PROJECT | JAPAN INTERNATIONAL COOPERATION AGENCY | REPUBLIC OF THE UNION OF MYANMAR MINISTRY OF CONSTRUCTION DEPARTMENT OF BRIDGE | NIPPON KOEI CO., LTD. ORIENTAL CONSULTANTS GLOBAL CO., LTD. METROPOLITAN EXPRESSWAY COMPANY LIMITED CHODAI CO.,LTD. NIPPON ENGINEERING CONSULTANTS CO.,LTD. |

| | NAME | SIGNATURE | DATE |
|---|---|---|---|
| PREPARED BY | T. ICHIKAWA | 市川敏夫 | 15 Jun.2017 |
| CHECKED BY | T. HAYAKAWA | 早川知邦 | 20 Jun.2017 |
| APPROVED BY | Y. SANO | 佐野裕一 | 21 Jun.2017 |

DRAWING TITLE: (REFERENCE) DIVERSION OF EXISTING TRAFFIC DURING CONSTRUCTION OF INTERSECTION

PACKAGE: 1

DWG No.: P1-REF-0007

# (REFERENCE) MONUMENT AND BRIDGE RECORD

## MONUMENT

### PLAQUE

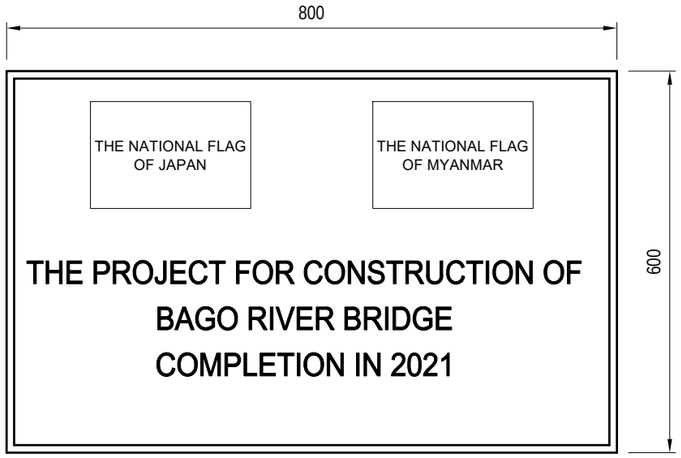


Note) Design & sentence shall be confirmed to the Engineer during construction period.

### FRONT ELEVATION

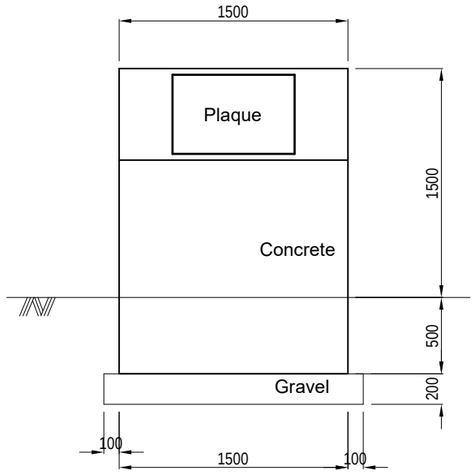


### SIDE ELEVATION

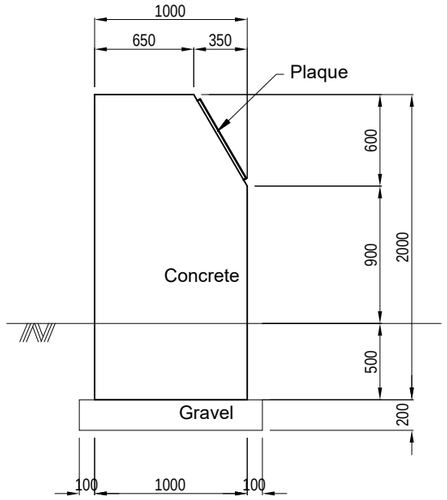


### TOP ELEVATION

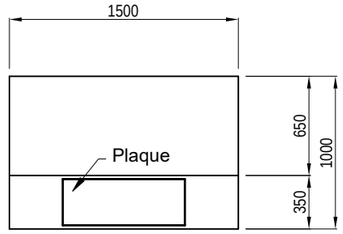


Note) Design and details of monument shall be confirmed to the Engineer during construction period.

## BRIDGE RECORD

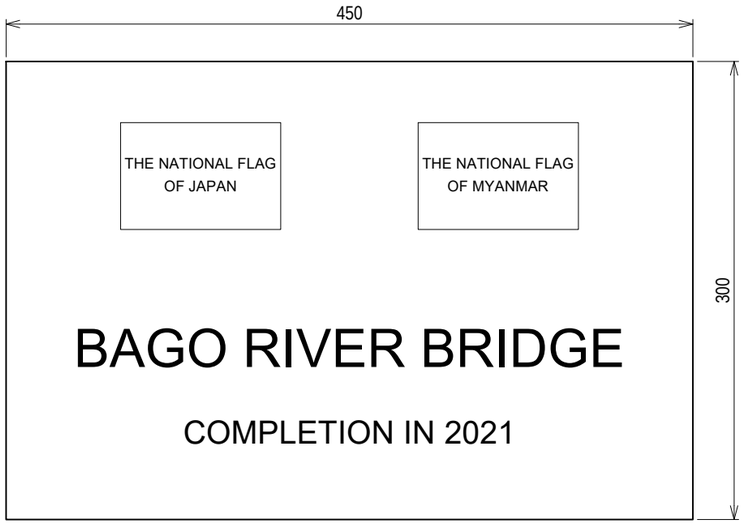


Note) Design & sentence shall be confirmed to the Engineer during construction period.

## LOCATION

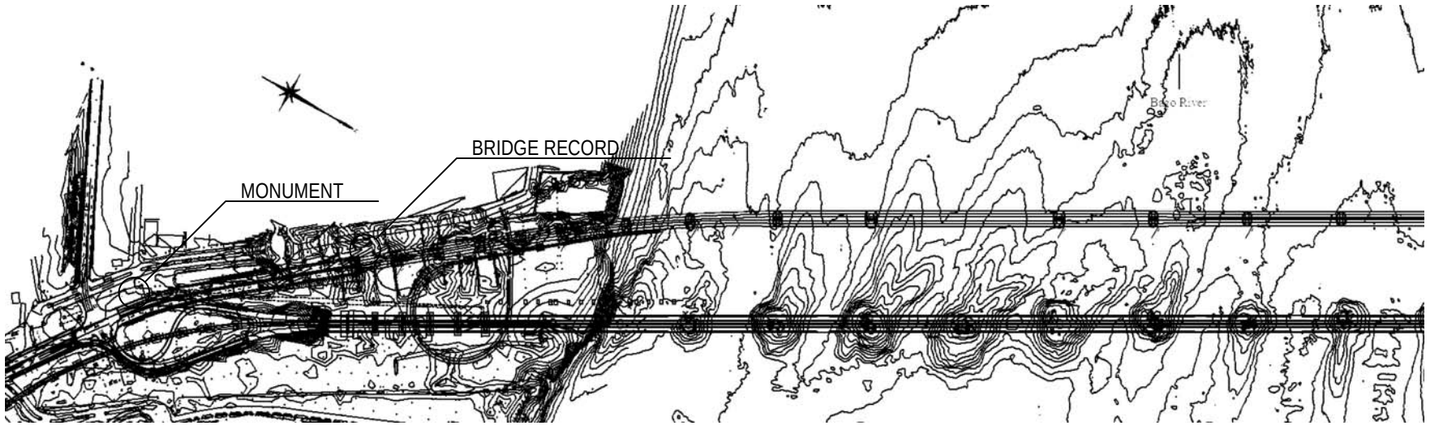


Note) Location for momument and bridge record shall be confirmed to the Engineer during construction period.

| PROJECT NAME | FINANCED BY | COUNTERPART | JICA STUDY TEAM |
|---|---|---|---|
| DETAILED DESIGN ON BAGO RIVER BRIDGE CONSTRUCTION PROJECT | JAPAN INTERNATIONAL COOPERATION AGENCY | REPUBLIC OF THE UNION OF MYANMAR MINISTRY OF CONSTRUCTION DEPARTMENT OF BRIDGE | NIPPON KOEI CO., LTD. ORIENTAL CONSULTANTS GLOBAL CO., LTD. METROPOLITAN EXPRESSWAY COMPANY LIMITED CHODAI CO.,LTD. NIPPON ENGINEERING CONSULTANTS CO.,LTD. |

| | NAME | SIGNATURE | DATE |
|---|---|---|---|
| PREPARED BY | T. HAYAKAWA | | 29 Sep. 2017 |
| CHECKED BY | T. HAYAKAWA | | 3 Oct. 2017 |
| APPROVED BY | Y. SANO | | 6 Oct. 2017 |

| DRAWING TITLE | PACKAGE |
|---|---|
| (REFERENCE) MONUMENT AND BRIDGE RECORD | 1 |
| | DWG No. |
| | P1-REF-0008 |

# (REFERENCE) NETWORK PLAN

## Primary Control Point By GPS

| Point No | Easting | Northing | Elevation |
|---|---|---|---|
| GPS 01 | 205,842.773 | 1,857,184.685 | 5.698 |
| GPS 011 | 205,760.156 | 1,857,254.692 | 5.543 |
| GPS 02 | 205,321.737 | 1,857,693.657 | 4.426 |
| GPS 021 | 205,410.480 | 1,857,584.129 | 4.262 |
| GPS 03 | 204,535.795 | 1,859,088.346 | 4.115 |
| GPS 031 | 204,453.920 | 1,859,180.786 | 3.874 |
| GPS 04 | 204,274.946 | 1,859,592.673 | 5.344 |
| GPS 041 | 204,205.987 | 1,859,475.724 | 5.066 |
| GPS 05 | 203,521.369 | 1,860,268.348 | 4.914 |
| GPS 051 | 203,458.184 | 1,860,271.486 | 5.105 |

## Secondary Control Point By TS

| Point No | Easting | Northing | Elevation |
|---|---|---|---|
| SBM-1 | 205,709.674 | 1,857,245.921 | 4.664 |
| SBM-2 | 205,648.458 | 1,857,295.972 | 3.968 |
| SBM-3 | 205,587.614 | 1,857,378.019 | 4.452 |
| SBM-4 | 205,552.160 | 1,857,421.174 | 4.242 |
| SBM-5 | 205,506.509 | 1,857,467.950 | 4.582 |
| SBM-6 | 205,459.429 | 1,857,530.545 | 4.476 |
| SBM-7 | 204,424.427 | 1,859,238.491 | 4.324 |
| SBM-8 | 204,329.282 | 1,859,386.470 | 4.361 |
| SBM-9 | 204,254.242 | 1,859,527.666 | 4.472 |
| SBM-10 | 204,259.481 | 1,859,662.039 | 5.476 |
| SBM-11 | 204,195.472 | 1,859,703.336 | 4.441 |
| SBM-12 | 204,154.484 | 1,859,768.248 | 4.809 |
| SBM-13 | 204,087.886 | 1,859,825.931 | 4.820 |
| SBM-14 | 204,009.411 | 1,859,866.246 | 4.668 |
| SBM-15 | 203,917.301 | 1,859,975.432 | 4.711 |
| SBM-16 | 203,854.596 | 1,860,030.075 | 4.662 |
| SBM-17 | 203,785.802 | 1,860,075.169 | 5.150 |
| SBM-18 | 203,692.328 | 1,860,139.951 | 4.536 |
| SBM-19 | 203,678.453 | 1,860,185.673 | 4.496 |
| SBM-20 | 203,595.035 | 1,860,214.212 | 4.526 |

Elevation : Direct Leveling above Mean Sea Level

## Existing Control Points from SD

| Point No | Easting | Northing | Elevation |
|---|---|---|---|
| GCP 08 | 204,426.731 | 1,867,438.719 | ——— |
| SD 2 | 197,289.025 | 1,863,904.781 | ——— |
| BM76097 | 214,396.8 | 1,851,646.3 | 23.895 |

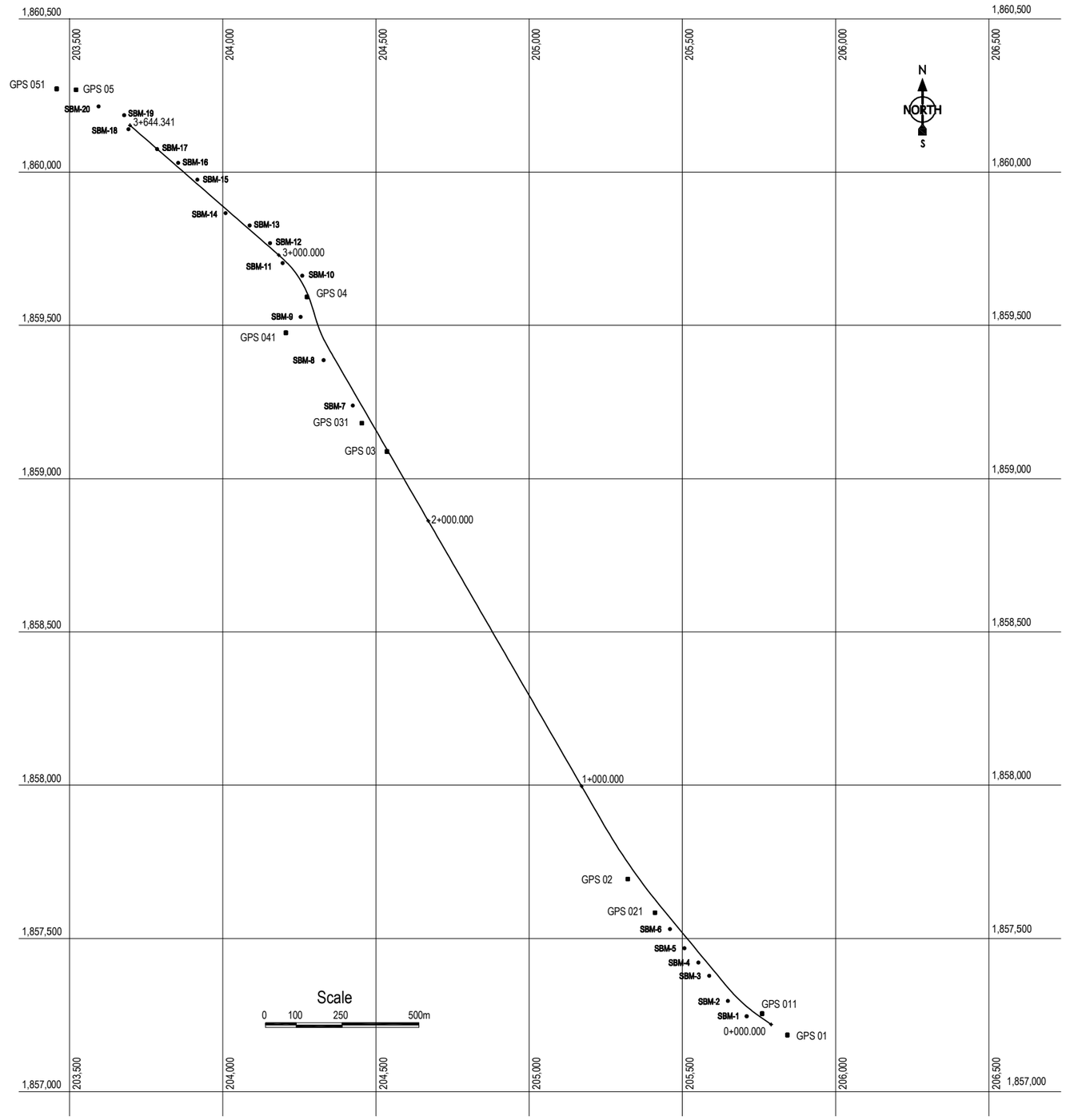


| PROJECT NAME | FINANCED BY | COUNTERPART | JICA STUDY TEAM |
|---|---|---|---|
| DETAILED DESIGN ON BAGO RIVER BRIDGE CONSTRUCTION PROJECT | JAPAN INTERNATIONAL COOPERATION AGENCY | REPUBLIC OF THE UNION OF MYANMAR MINISTRY OF CONSTRUCTION DEPARTMENT OF BRIDGE | NIPPON KOEI CO., LTD. ORIENTAL CONSULTANTS GLOBAL CO., LTD. METROPOLITAN EXPRESSWAY COMPANY LIMITED CHODAI CO.,LTD. NIPPON ENGINEERING CONSULTANTS CO.,LTD. |

| | NAME | SIGNATURE | DATE |
|---|---|---|---|
| PREPARED BY | K . TAMARI | | 14 Jul. 2017 |
| CHECKED BY | T. HAYAKAWA | | 20 Jul. 2017 |
| APPROVED BY | Y. SANO | | 25 Jul. 2017 |

DRAWING TITLE: (REFERENCE) NETWORK PLAN

PACKAGE: 1

DWG No. P1-REF-0009

# (REFERENCE) EXISTING UNDERGROUND UTILITIES LAYOUT (1)

S=1:1000

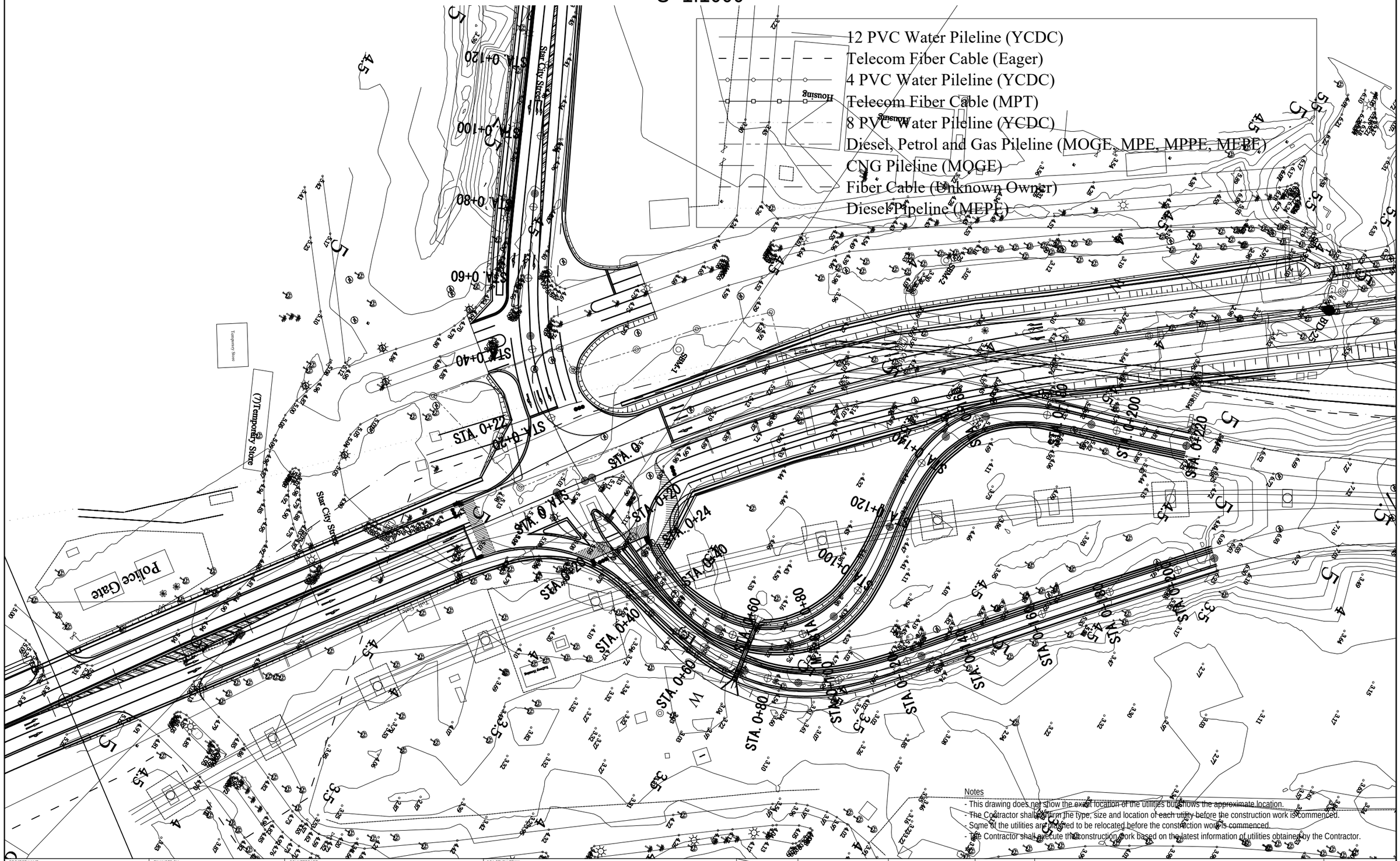


Notes

- This drawing does not show the exact location of the utilities but shows the approximate location.
- The Contractor shall reconfirm the type, size and location of each utility before the construction work is commenced.
- Some of the utilities are planned to be relocated before the construction work is commenced.
- The Contractor shall execute the construction work based on the latest information of utilities obtained by the Contractor.

| PROJECT NAME | FINANCED BY | COUNTERPART | JICA STUDY TEAM |
|---|---|---|---|
| DETAILED DESIGN ON BAGO RIVER BRIDGE CONSTRUCTION PROJECT | JAPAN INTERNATIONAL COOPERATION AGENCY | REPUBLIC OF THE UNION OF MYANMAR<br>MINISTRY OF CONSTRUCTION<br>DEPARTMENT OF BRIDGE | NIPPON KOEI CO., LTD.<br>ORIENTAL CONSULTANTS GLOBAL CO., LTD.<br>METROPOLITAN EXPRESSWAY COMPANY LIMITED<br>CHODAI CO.,LTD.<br>NIPPON ENGINEERING CONSULTANTS CO.,LTD. |

| | NAME | SIGNATURE | DATE |
|---|---|---|---|
| PREPARED BY | T. HAYAKAWA | 平川知邦 | 29 Sept.2017 |
| CHECKED BY | T. HAYAKAWA | 平川知邦 | 3 Oct.2017 |
| APPROVED BY | Y. SANO | 佐野裕一 | 6 Oct.2017 |

| DRAWING TITLE | PACKAGE |
|---|---|
| (REFERENCE)<br>EXISTING UNDERGROUND UTILITIES LAYOUT (1) | 1 |
| | DWG No. |
| | P1-REF-0011 |

# (REFERENCE) EXISTING UNDERGROUND UTILITIES LAYOUT (2)

S=1:1000

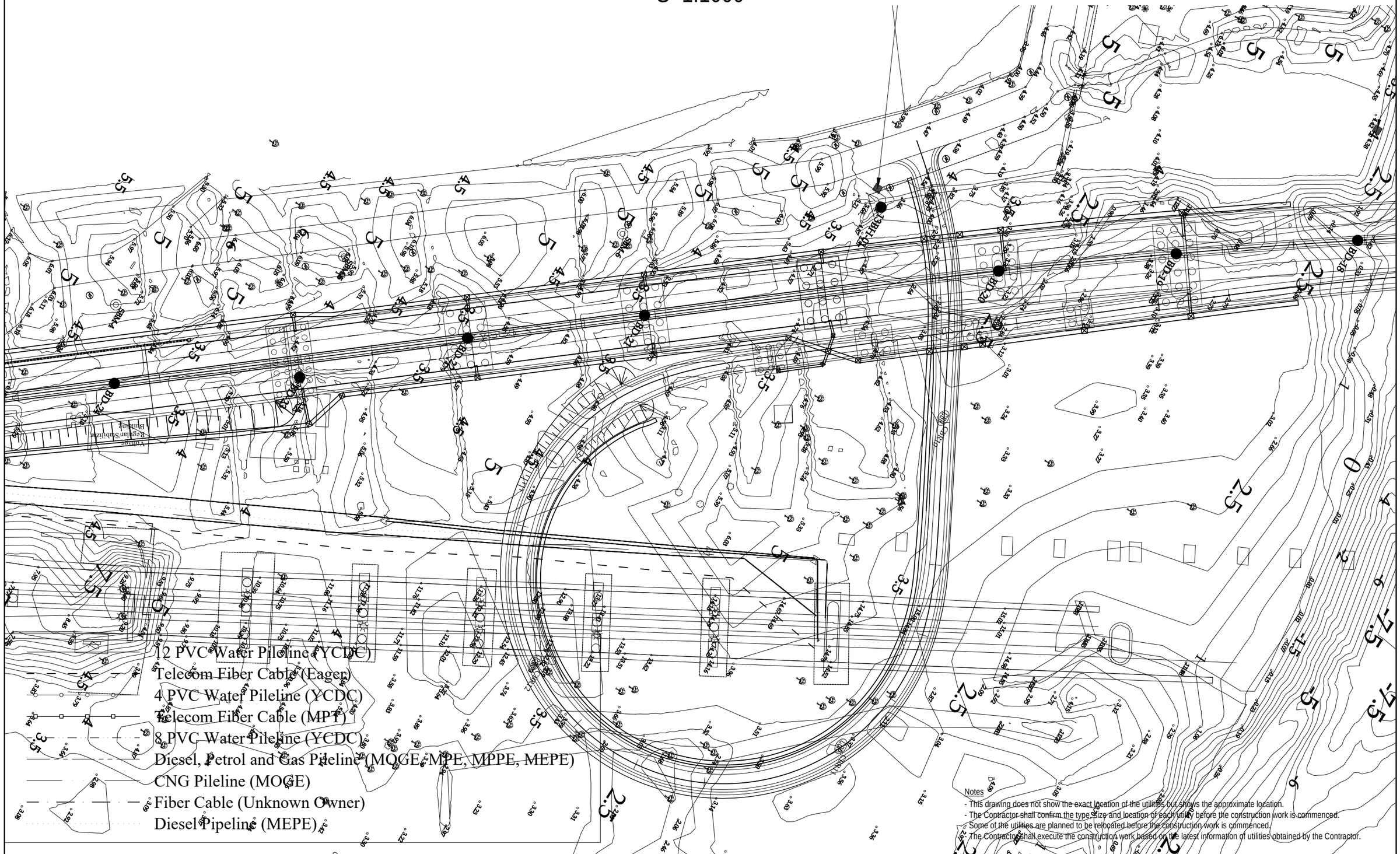


Notes

- This drawing does not show the exact location of the utilities but shows the approximate location.
- The Contractor shall confirm the type, size and location of each utility before the construction work is commenced.
- Some of the utilities are planned to be relocated before the construction work is commenced.
- The Contractor shall execute the construction work based on the latest information of utilities obtained by the Contractor.

| PROJECT NAME | FINANCED BY | COUNTERPART | JICA STUDY TEAM |
|---|---|---|---|
| DETAILED DESIGN ON BAGO RIVER BRIDGE CONSTRUCTION PROJECT | JAPAN INTERNATIONAL COOPERATION AGENCY | REPUBLIC OF THE UNION OF MYANMAR<br>MINISTRY OF CONSTRUCTION<br>DEPARTMENT OF BRIDGE | NIPPON KOEI CO., LTD.<br>ORIENTAL CONSULTANTS GLOBAL CO., LTD.<br>METROPOLITAN EXPRESSWAY COMPANY LIMITED<br>CHODAI CO.,LTD.<br>NIPPON ENGINEERING CONSULTANTS CO.,LTD. |

| | NAME | SIGNATURE | DATE |
|---|---|---|---|
| PREPARED BY | T. HAYAKAWA | | 29 Sept.2017 |
| CHECKED BY | T. HAYAKAWA | | 3 Oct.2017 |
| APPROVED BY | Y. SANO | | 6 Oct.2017 |

| DRAWING TITLE | PACKAGE |
|---|---|
| (REFERENCE)<br>EXISTING UNDERGROUND UTILITIES LAYOUT (2) | 1 |
| | DWG No. |
| | P1-REF-0012 |

# (REFERENCE) QUARRY SITE LOCATION

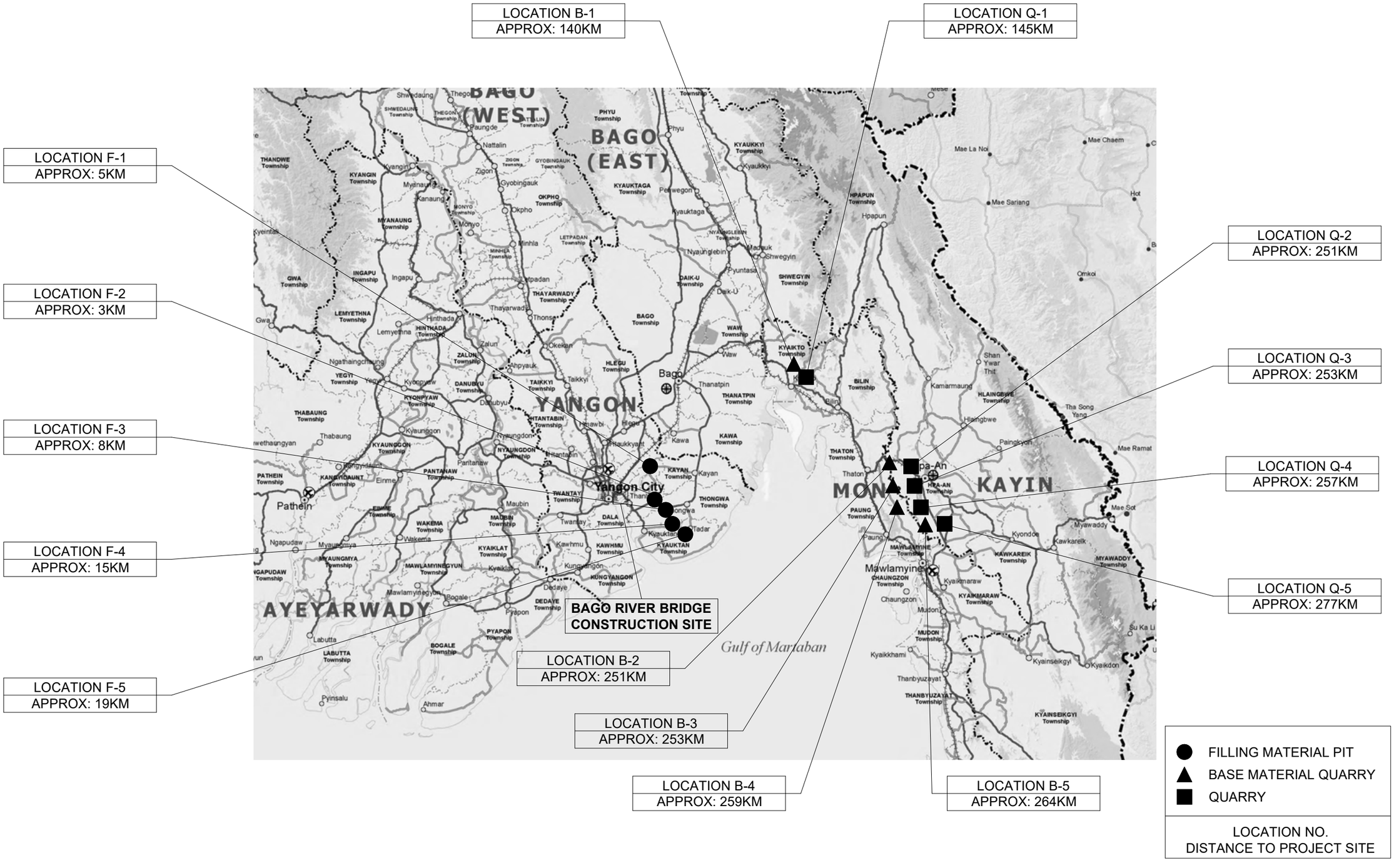


| PROJECT NAME | FINANCED BY | COUNTERPART | JICA STUDY TEAM |
|---|---|---|---|
| DETAILED DESIGN ON BAGO RIVER BRIDGE CONSTRUCTION PROJECT | JAPAN INTERNATIONAL COOPERATION AGENCY | REPUBLIC OF THE UNION OF MYANMAR MINISTRY OF CONSTRUCTION DEPARTMENT OF BRIDGE | NIPPON KOEI CO., LTD. ORIENTAL CONSULTANTS GLOBAL CO., LTD. METROPOLITAN EXPRESSWAY COMPANY LIMITED CHODAI CO.,LTD. NIPPON ENGINEERING CONSULTANTS CO.,LTD. |

| | NAME | SIGNATURE | DATE | DRAWING TITLE | PACKAGE |
|---|---|---|---|---|---|
| PREPARED BY | T. HAYAKAWA | | 4 Aug.2017 | (REFERENCE) QUARRY SITE LOCATION | 1 |
| CHECKED BY | T. HAYAKAWA | | 14 Aug.2017 | | DWG No. |
| APPROVED BY | Y. SANO | | 16 Aug.2017 | | P1-REF-1001 |

# (REFERENCE) LAND TRANSPORTATION ROUTE TO WASTE DISPOSAL SITE IN THILAWA SEZ

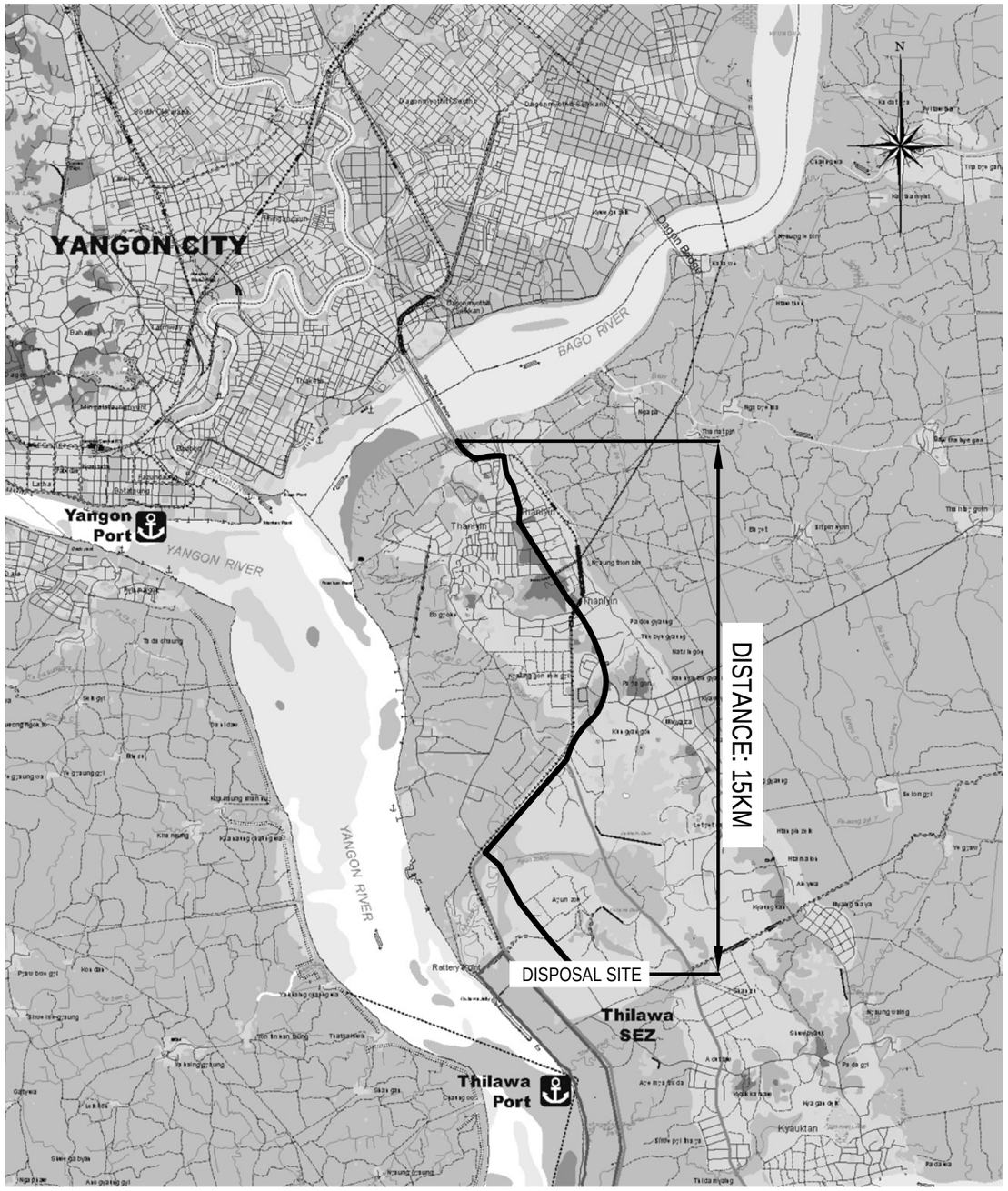


LAND ROUTE 1
FROM PACKAGE 1 TO DIPOSAL SITE

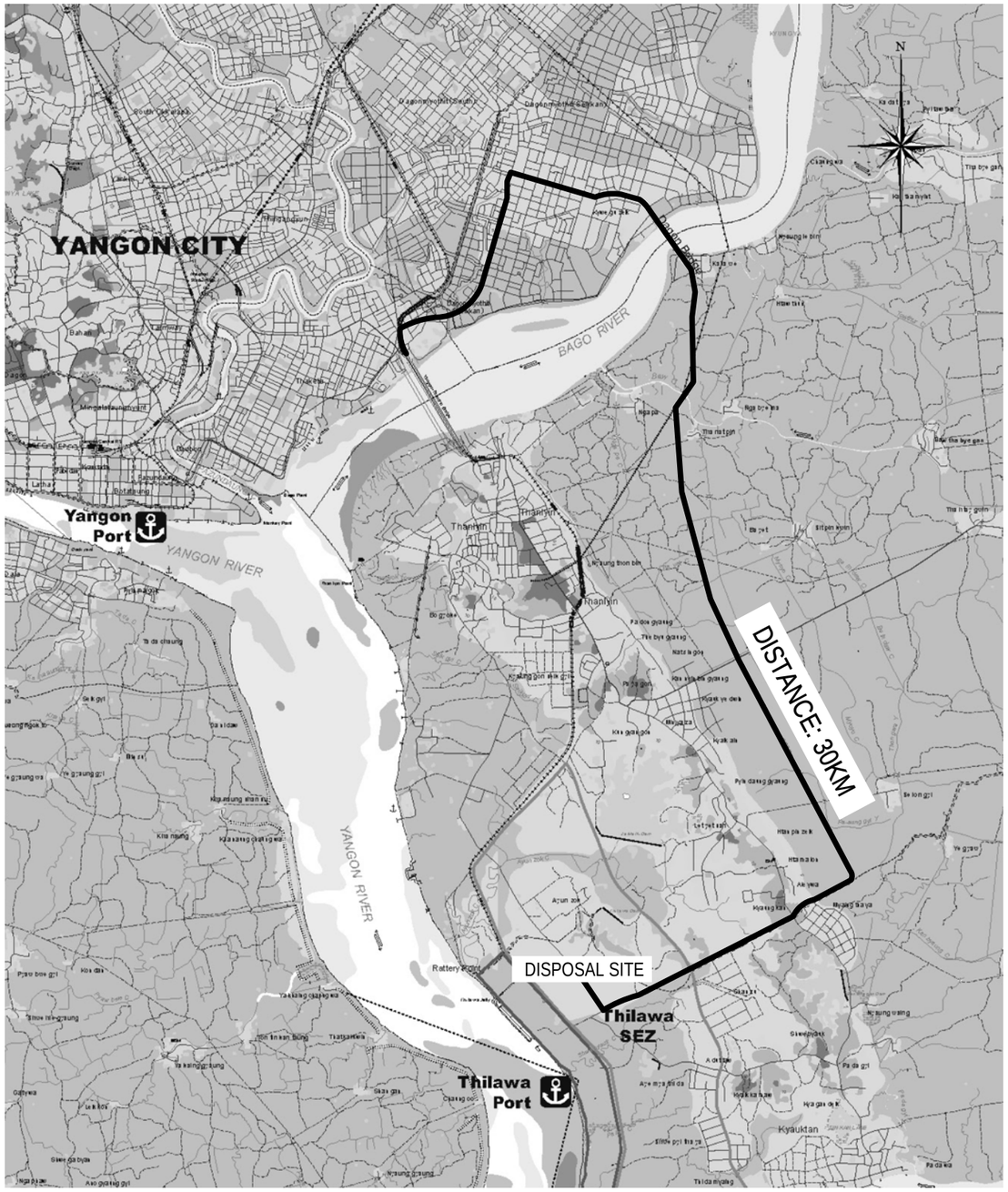


LAND ROUTE 2
FROM PACKAGE 2 & 3 TO DIPOSAL SITE

NOTE: The site shown in this drawing is a candidate for the waste disposal site. The contractor may change the waste disposal site according to Engineer's instruction.

| PROJECT NAME | FINANCED BY | COUNTERPART | JICA STUDY TEAM |
|---|---|---|---|
| DETAILED DESIGN ON BAGO RIVER BRIDGE CONSTRUCTION PROJECT | JAPAN INTERNATIONAL COOPERATION AGENCY | REPUBLIC OF THE UNION OF MYANMAR MINISTRY OF CONSTRUCTION DEPARTMENT OF BRIDGE | NIPPON KOEI CO., LTD. ORIENTAL CONSULTANTS GLOBAL CO., LTD. METROPOLITAN EXPRESSWAY COMPANY LIMITED CHODAI CO.,LTD. NIPPON ENGINEERING CONSULTANTS CO.,LTD. |

| | NAME | SIGNATURE | DATE |
|---|---|---|---|
| PREPARED BY | T. HAYAKAWA | | 4 Aug.2017 |
| CHECKED BY | T. HAYAKAWA | | 14 Aug.2017 |
| APPROVED BY | Y. SANO | | 16 Aug.2017 |

| DRAWING TITLE | PACKAGE |
|---|---|
| (REFERENCE) LAND TRANSPORTATION ROUTE TO WASTE DISPOSAL SITE IN THILAWA SEZ | 1 |
| | DWG No. |
| | P1-REF-1002 |

# (REFERENCE) LAND TRANSPORTATION ROUTE FROM LANDING PORT

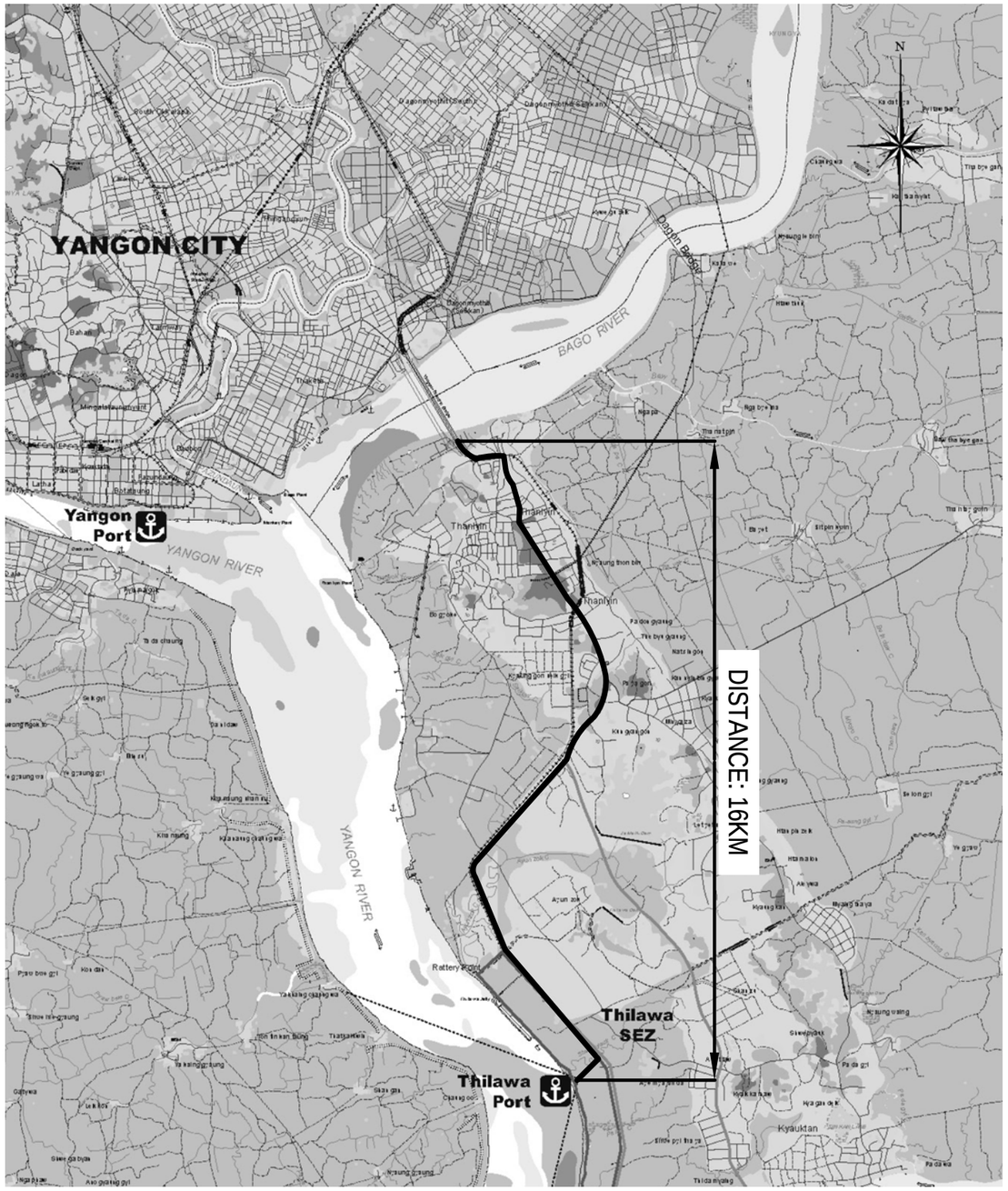


LAND ROUTE 1
FROM THILAWA PORT TO PACKAGE 1

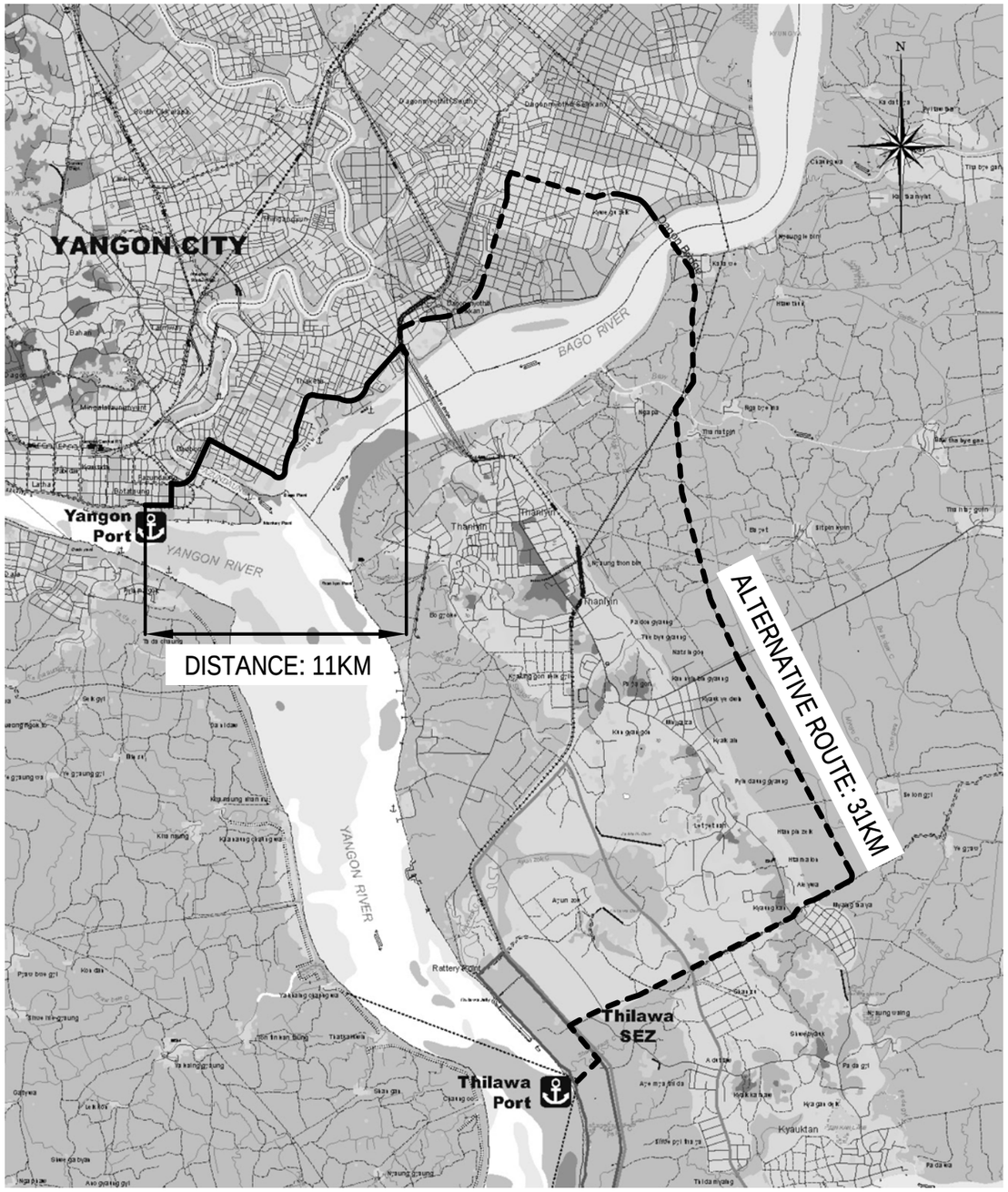


LAND ROUTE 2
FROM YANGON PORT TO PACKAGE 2 & 3
(FROM THILAWA PORT TO PACKAGE 2 & 3)

| PROJECT NAME | FINANCED BY | COUNTERPART | JICA STUDY TEAM |
|---|---|---|---|
| DETAILED DESIGN ON BAGO RIVER BRIDGE CONSTRUCTION PROJECT | JAPAN INTERNATIONAL COOPERATION AGENCY | REPUBLIC OF THE UNION OF MYANMAR MINISTRY OF CONSTRUCTION DEPARTMENT OF BRIDGE | NIPPON KOEI CO., LTD. ORIENTAL CONSULTANTS GLOBAL CO., LTD. METROPOLITAN EXPRESSWAY COMPANY LIMITED CHODAI CO.,LTD. NIPPON ENGINEERING CONSULTANTS CO.,LTD. |

| | NAME | SIGNATURE | DATE | DRAWING TITLE | PACKAGE |
|---|---|---|---|---|---|
| PREPARED BY | T. HAYAKAWA | | 4 Aug.2017 | (REFERENCE) LAND TRANSPORTATION ROUTE FROM LANDING PORT | 1 |
| CHECKED BY | T. HAYAKAWA | | 14 Aug.2017 | | DWG No. |
| APPROVED BY | Y. SANO | | 16 Aug.2017 | | P1-REF-1003 |

# (REFERENCE) DIAGRAM OF RAILING POST

S=1:800

## A1 - P5 (PC BOX GIRDER), P5-P10 (STEEL BOX GIRDER)

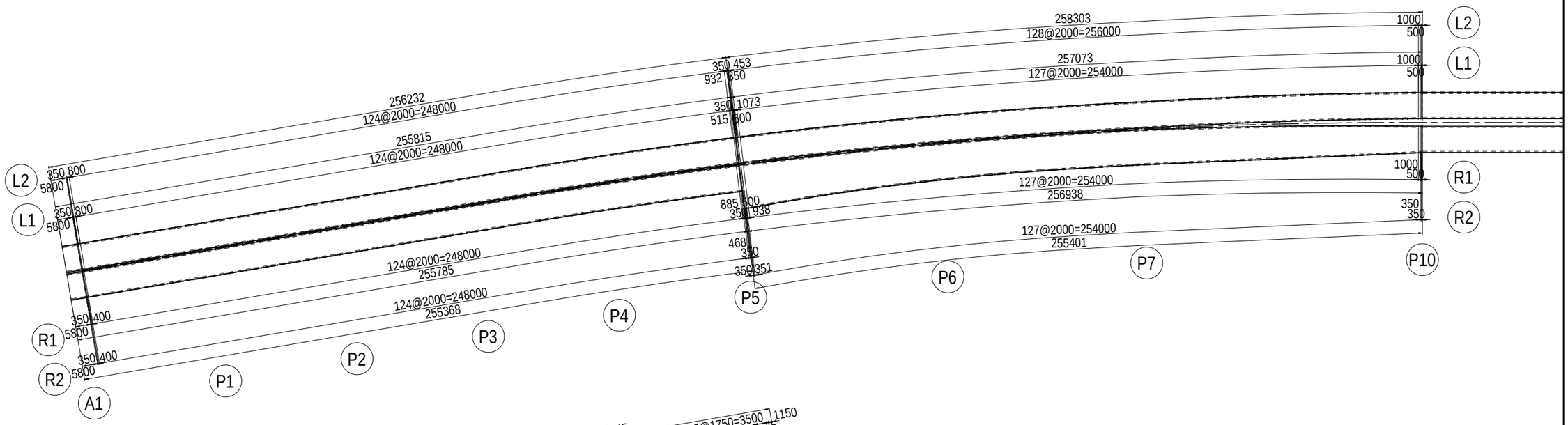


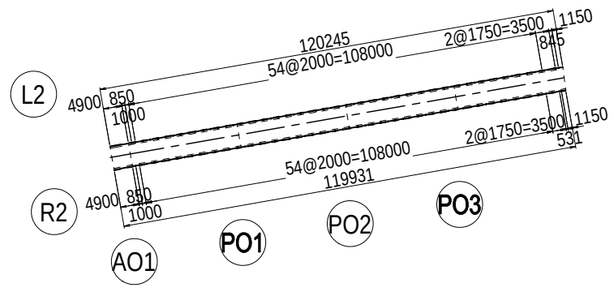


## LEGEND

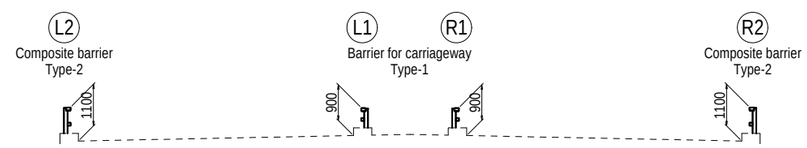


## P10 - P13 (CABLE STAYED BRIDGE)

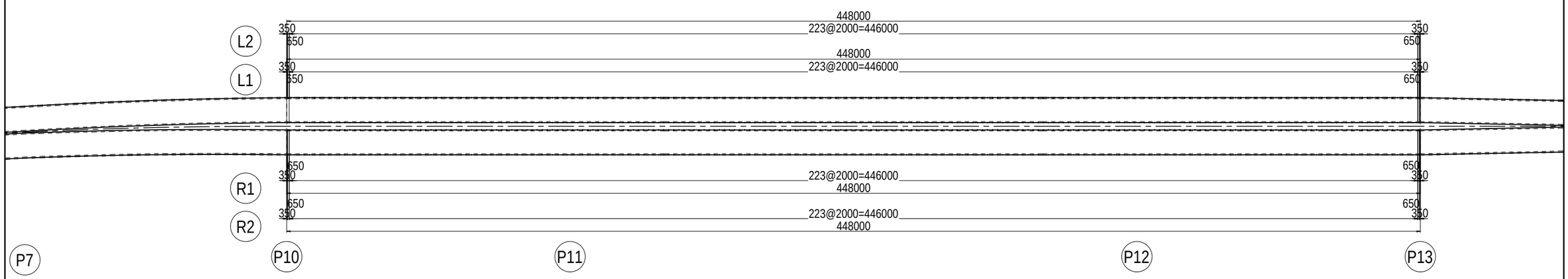


Elevation represents above MSL unless otherwise indicated.

| PROJECT NAME | FINANCED BY | COUNTERPART | JICA STUDY TEAM |
|---|---|---|---|
| DETAILED DESIGN ON BAGO RIVER BRIDGE CONSTRUCTION PROJECT | JAPAN INTERNATIONAL COOPERATION AGENCY | REPUBLIC OF THE UNION OF MYANMAR MINISTRY OF CONSTRUCTION DEPARTMENT OF BRIDGE | NIPPON KOEI CO., LTD. ORIENTAL CONSULTANTS GLOBAL CO., LTD. METROPOLITAN EXPRESSWAY COMPANY LIMITED CHODAI CO.,LTD. NIPPON ENGINEERING CONSULTANTS CO.,LTD. |

| | NAME | SIGNATURE | DATE |
|---|---|---|---|
| PREPARED BY | T. HAYAKAWA | | 29 Sep. 2017 |
| CHECKED BY | T. HAYAKAWA | | 3 Oct. 2017 |
| APPROVED BY | Y. SANO | | 6 Oct. 2017 |

| DRAWING TITLE | PACKAGE |
|---|---|
| (REFERENCE) DIAGRAM OF RAILING POST | 1 |
| | DWG No. |
| | P1-REF-2001 |

# (REFERENCE) INSPECTION LADDER FROM DECK

## LADDER ON P5 PIER

### PLAN

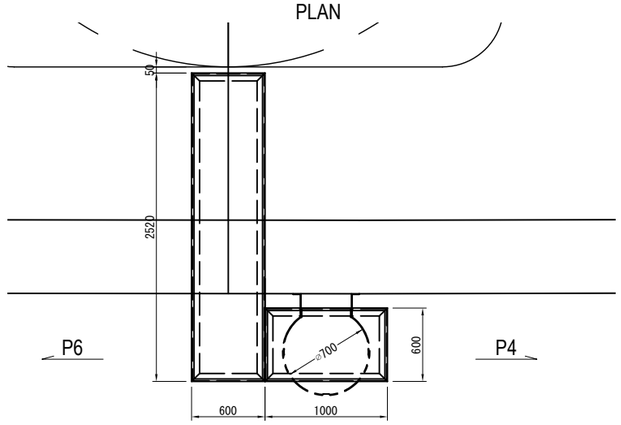


LADDER
- 2-L 50x50x6x4230
- 3-FB 50x4.5x2400
- 4-FB 50x4.5x2057
- 14-RB 22φx440
- 4-FB 65x6x264
- 4-Concrete Anchor M6x125
- 4-BN M6x40

PATHWAY (1)
- 1-CH PL 560x3.2x2480
- 2-C 125x65x6x8x2520
- 2-C 125x65x6x8x600
- 4-FB 50x6x588
- 26-BN M10x30
- 2-PL 240x9x580
- 2-PL 100x9x580

HANDRAIL (1)
- 5-L 65x65x6x930
- 5-PL 105x6x185
- 1-PIPE 42.7x2.3x2520
- 1-PIPE 21.7x1.9x2520
- 1-PIPE 42.7x2.3x1920
- 1-PIPE 21.7x2.3x1920
- 5-U-bolt 32A
- 5-U-bolt 15A
- 20-Nut M10

PATHWAY (2)
- 1-CH PL 560x3.2x960
- 2-C 125x65x6x8x1000
- 2-C 125x65x6x8x600
- 3-FB 50x6x588
- 12-BN M10x30
- 1-PL 240x9x580
- 1-PL 100x9x580

HANDRAIL (2)
- 6-L 65x65x6x930
- 6-PL 105x6x185
- 1-PIPE 42.7x2.3x1600
- 1-PIPE 21.7x1.9x1600
- 1-PIPE 42.7x2.3x1000
- 1-PIPE 21.7x2.3x1000
- 1-PIPE 42.7x2.3x500
- 1-PIPE 21.7x2.3x500
- 6-U-bolt 32A
- 6-U-bolt 15A
- 24-Nut M10

SUPPORT BEAM
- 2-H 300x300x15x10x2570
- 2-H 300x300x15x10x1023
- 2-H 300x300x15x10x850
- 2-PL 320x320x10
- 2-PL 320x390x10
- 8-PL 280x145x10
- 16-Concrete Anchor M6x125

### ELEVATION

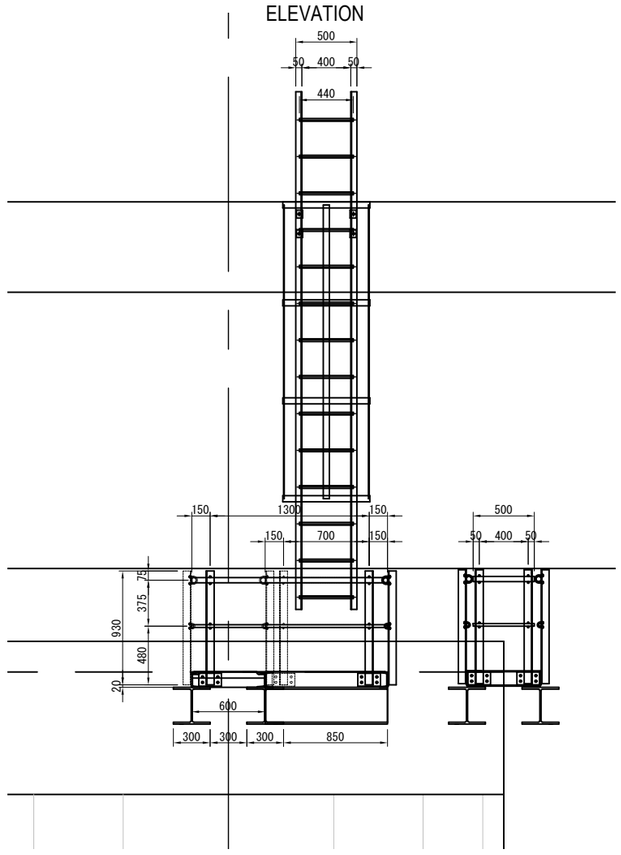


### SECTION

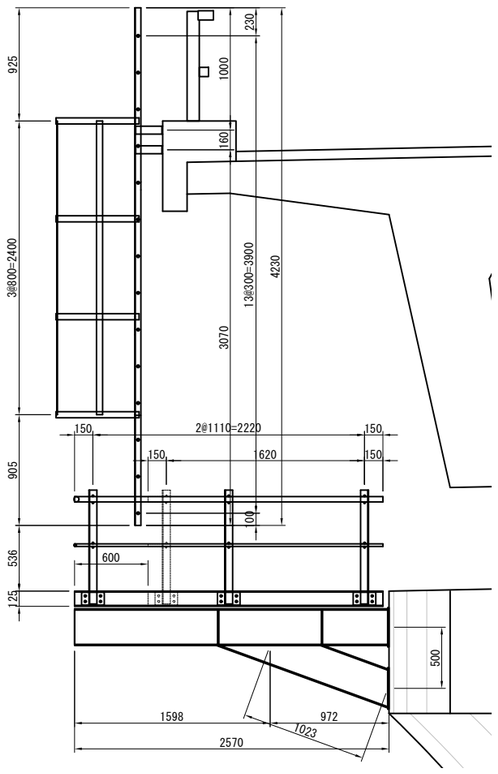


## LADDER ON P10 PIER

### PLAN

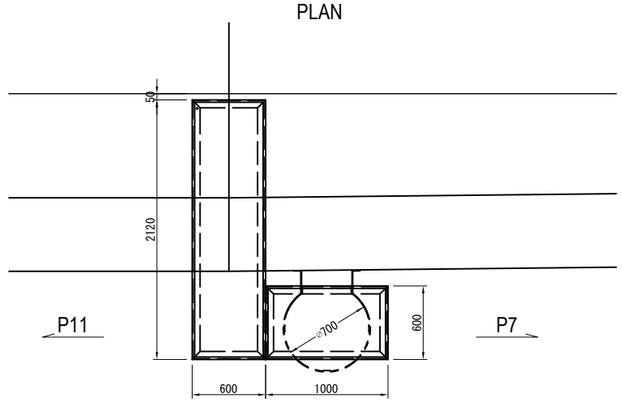


LADDER
- 2-L 50x50x6x4230
- 3-FB 50x4.5x2400
- 4-FB 50x4.5x2057
- 14-RB 22φx440
- 4-FB 65x6x264
- 4-Concrete Anchor M6x125
- 4-BN M6x40

PATHWAY (1)
- 1-CH PL 560x3.2x2080
- 2-C 125x65x6x8x2120
- 2-C 125x65x6x8x600
- 4-FB 50x6x588
- 26-BN M10x30
- 2-PL 240x9x580
- 2-PL 100x9x580

HANDRAIL (1)
- 5-L 65x65x6x930
- 5-PL 105x6x185
- 1-PIPE 42.7x2.3x2180
- 1-PIPE 21.7x1.9x2180
- 1-PIPE 42.7x2.3x1580
- 1-PIPE 21.7x2.3x1580
- 5-U-bolt 32A
- 5-U-bolt 15A
- 20-Nut M10

PATHWAY (2)
- 1-CH PL 560x3.2x960
- 2-C 125x65x6x8x1000
- 2-C 125x65x6x8x600
- 3-FB 50x6x588
- 12-BN M10x30
- 1-PL 240x9x580
- 1-PL 100x9x580

HANDRAIL (2)
- 6-L 65x65x6x930
- 6-PL 105x6x185
- 1-PIPE 42.7x2.3x1600
- 1-PIPE 21.7x1.9x1600
- 1-PIPE 42.7x2.3x1000
- 1-PIPE 21.7x2.3x1000
- 1-PIPE 42.7x2.3x500
- 1-PIPE 21.7x2.3x500
- 6-U-bolt 32A
- 6-U-bolt 15A
- 24-Nut M10

SUPPORT BEAM
- 2-H 300x300x15x10x2220
- 2-H 300x300x15x10x1202
- 2-H 300x300x15x10x850
- 2-PL 320x320x10
- 2-PL 320x444x10
- 8-PL 280x145x10
- 16-Concrete Anchor M6x125

### ELEVATION

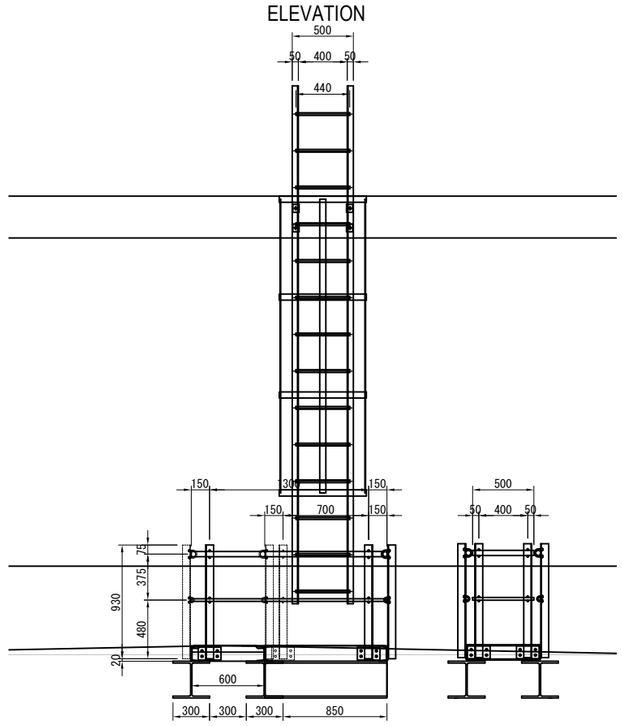


### SECTION

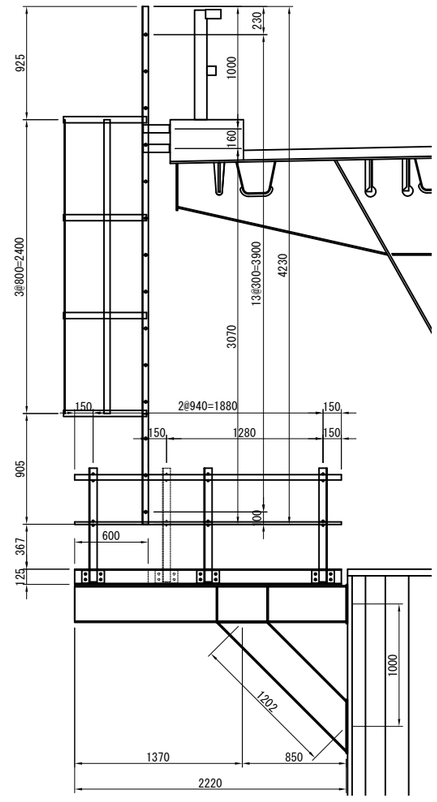


## LOCATION

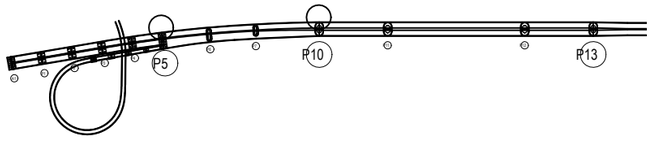


| PROJECT NAME | FINANCED BY | COUNTERPART | JICA STUDY TEAM |
|---|---|---|---|
| DETAILED DESIGN ON BAGO RIVER BRIDGE CONSTRUCTION PROJECT | JAPAN INTERNATIONAL COOPERATION AGENCY | REPUBLIC OF THE UNION OF MYANMAR MINISTRY OF CONSTRUCTION DEPARTMENT OF BRIDGE | NIPPON KOEI CO., LTD. ORIENTAL CONSULTANTS GLOBAL CO., LTD. METROPOLITAN EXPRESSWAY COMPANY LIMITED CHODAI CO.,LTD. NIPPON ENGINEERING CONSULTANTS CO.,LTD. |

| | NAME | SIGNATURE | DATE |
|---|---|---|---|
| PREPARED BY | T. HAYAKAWA | | 29 Sep. 2017 |
| CHECKED BY | T. HAYAKAWA | | 3 Oct. 2017 |
| APPROVED BY | Y. SANO | | 6 Oct. 2017 |

| DRAWING TITLE | PACKAGE |
|---|---|
| (REFERENCE) INSPECTION LADDER FROM DECK | 1 |
| | DWG No. |
| | P1-REF-2002 |