General View of Superstructure of Steel Box Girder Bridge with Steel Slab (MP59-MP62)

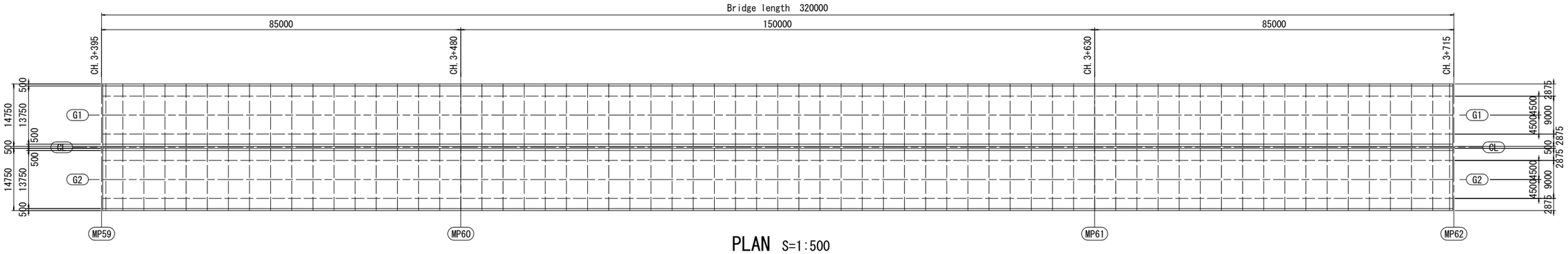

PLAN S=1:500

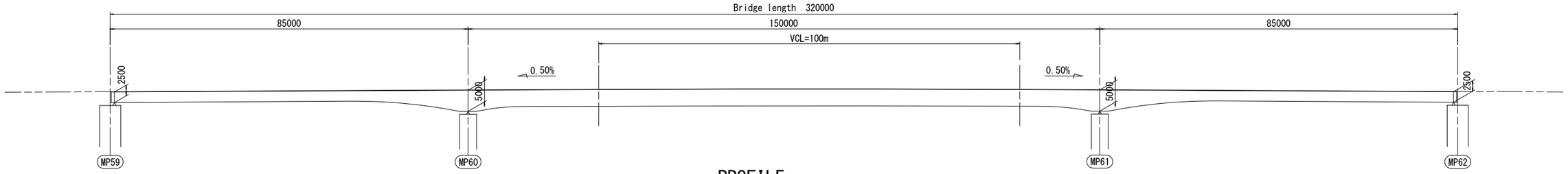

PROFILE S=1:500

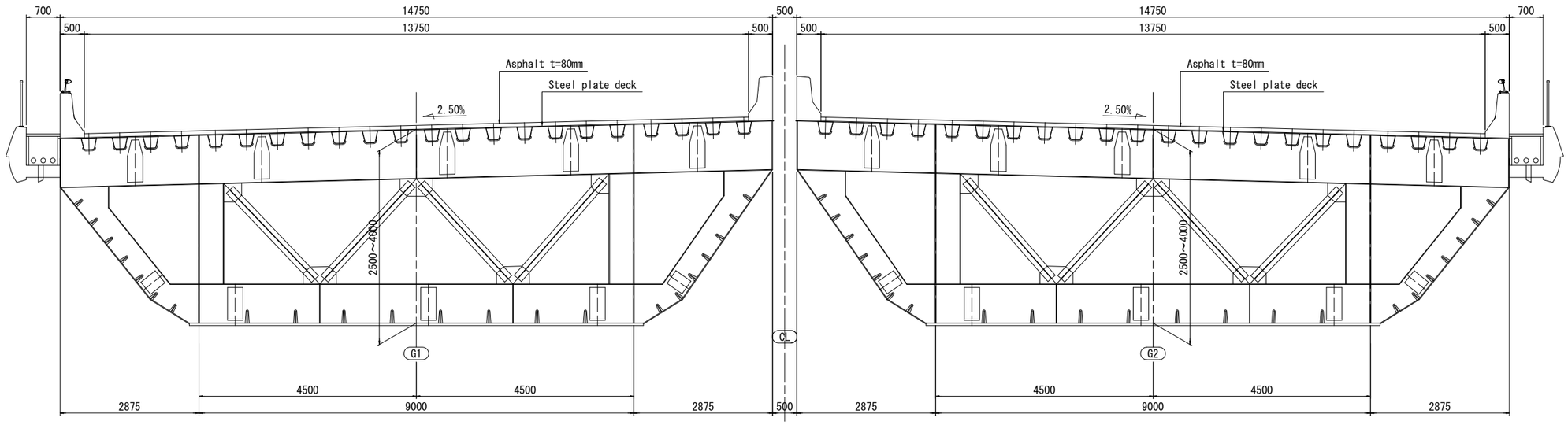

CROSS SECTION S=1:50

Mark	Date	By	Rev.

MMRDA
MUMBAI METROPOLITAN REGION DEVELOPMENT AUTHORITY

The Preparatory Survey on the Project for Construction of Mumbai Trans Harbour Link

JICA
JAPAN INTERNATIONAL COOPERATION AGENCY

Oriental Consultants Global Co., Ltd.
East Nippon Expressway Co., Ltd.
Nippon Koei Co., Ltd.
Nippon Engineering Consultants Co., Ltd.

Drawing Title: General View of Superstructure of Steel Box Girder Bridge with Steel Slab (MP59-MP62)

Drawing Status:

Drawing No.: B-053

Rev.:

General View of Superstructure of Steel Box Girder Bridge with Steel Slab (MP81-MP87)

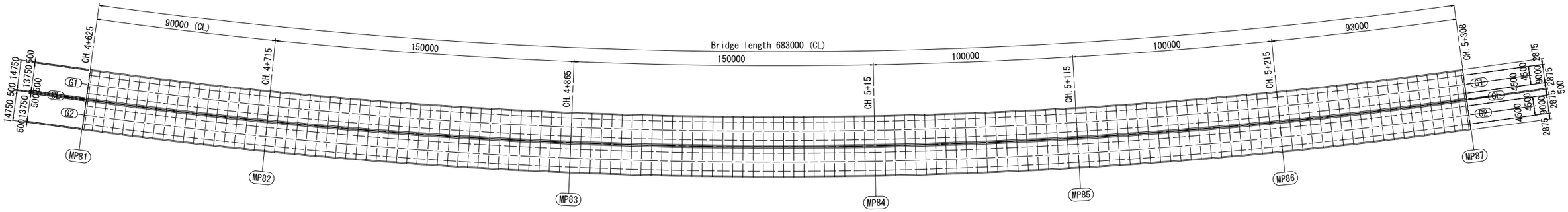

PLAN S=1:1000

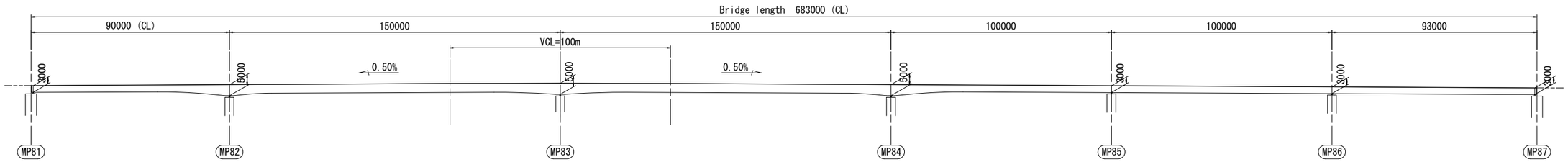

PROFILE S=1:1000

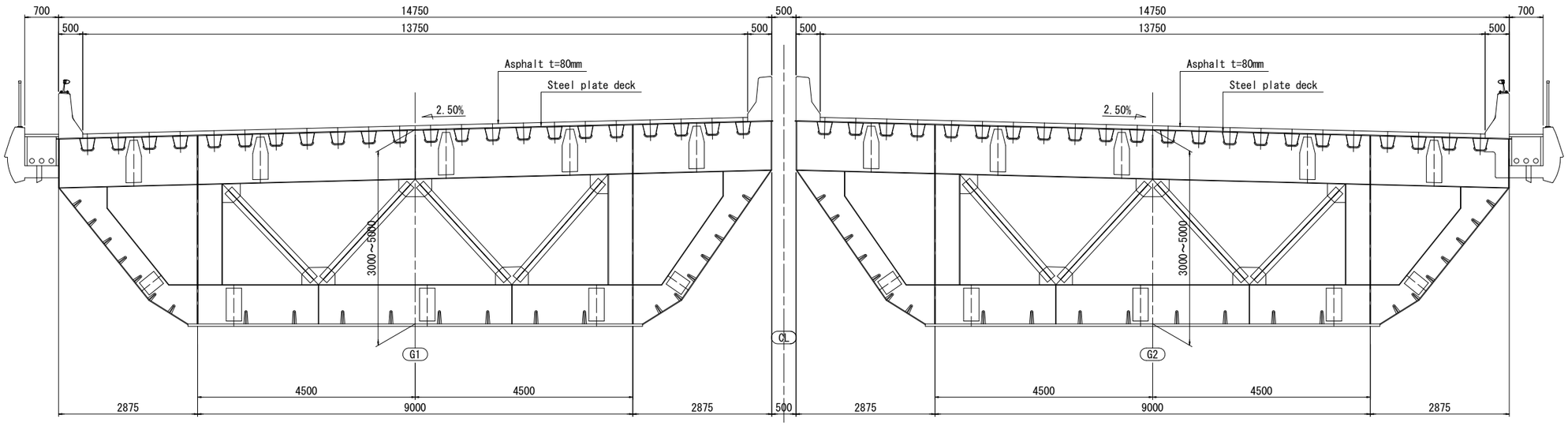

CROSS SECTION S=1:50

Mark	Date	By	Rev.

MMRDA
MUMBAI METROPOLITAN REGION DEVELOPMENT AUTHORITY

The Preparatory Survey on the Project for Construction of Mumbai Trans Harbour Link

JICA
JAPAN INTERNATIONAL COOPERATION AGENCY

Oriental Consultants Global Co., Ltd.
East Nippon Expressway Co., Ltd.
Nippon Koei Co., Ltd.
Nippon Engineering Consultants Co., Ltd.

Drawing Title: General View of Superstructure of Steel Box Girder Bridge with Steel Slab (MP81-MP87)

Drawing Status:

Drawing No.: B-054

Rev.:

General View of Superstructure of Steel Box Girder Bridge with Steel Slab (MP87-MP93)

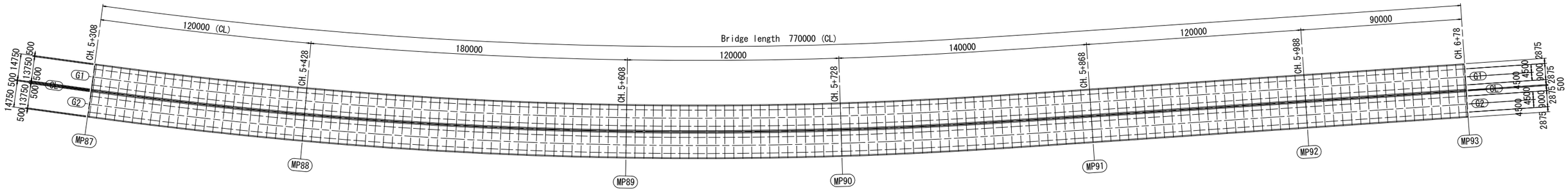

PLAN S=1:1100

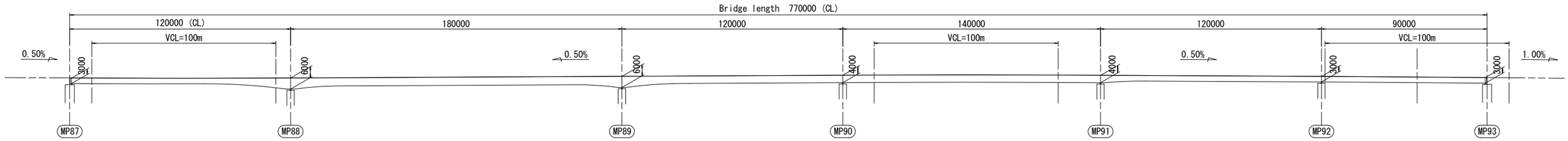

PROFILE S=1:1100

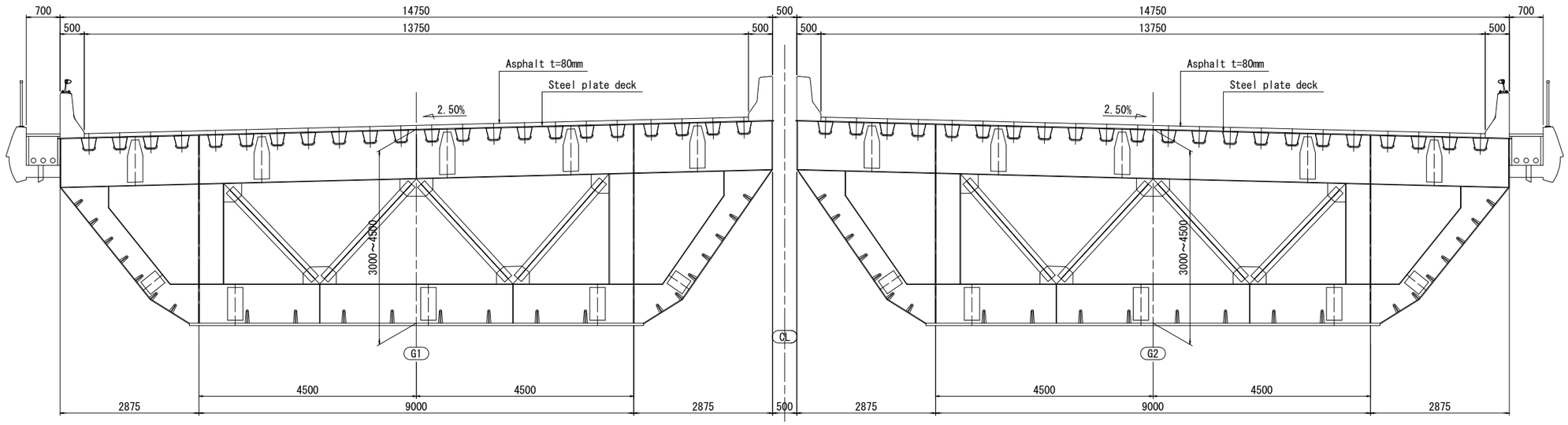

CROSS SECTION S=1:50

Mark	Date	By	Rev.

MMRDA
MUMBAI METROPOLITAN REGION DEVELOPMENT AUTHORITY

The Preparatory Survey on the Project for Construction of Mumbai Trans Harbour Link

JICA
JAPAN INTERNATIONAL COOPERATION AGENCY

Oriental Consultants Global Co., Ltd.
East Nippon Expressway Co., Ltd.
Nippon Koei Co., Ltd.
Nippon Engineering Consultants Co., Ltd.

Drawing Title: General View of Superstructure of Steel Box Girder Bridge with Steel Slab (MP87-MP93)

Drawing Status:

Drawing No.: B-055

Rev.:

General View of Superstructure of Steel Box Girder Bridge with Steel Slab (MP144-MP148)

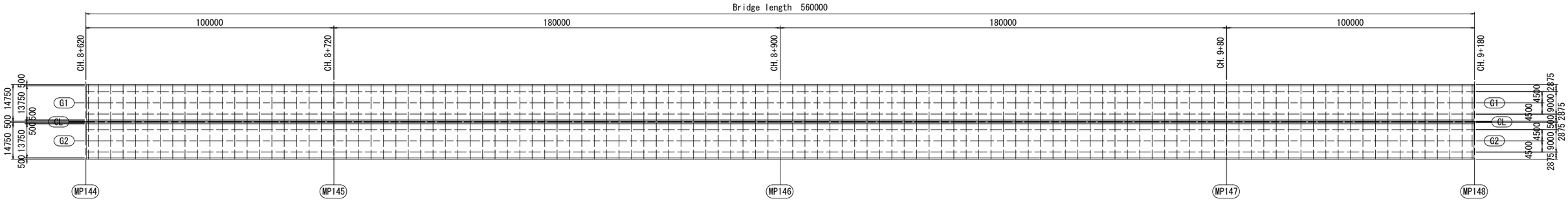

PLAN S=1:800

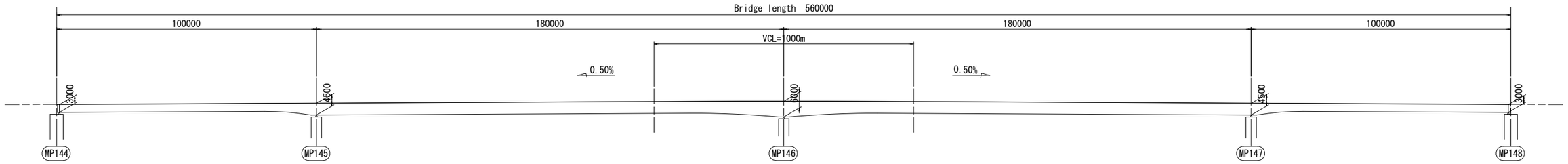

PROFILE S=1:800

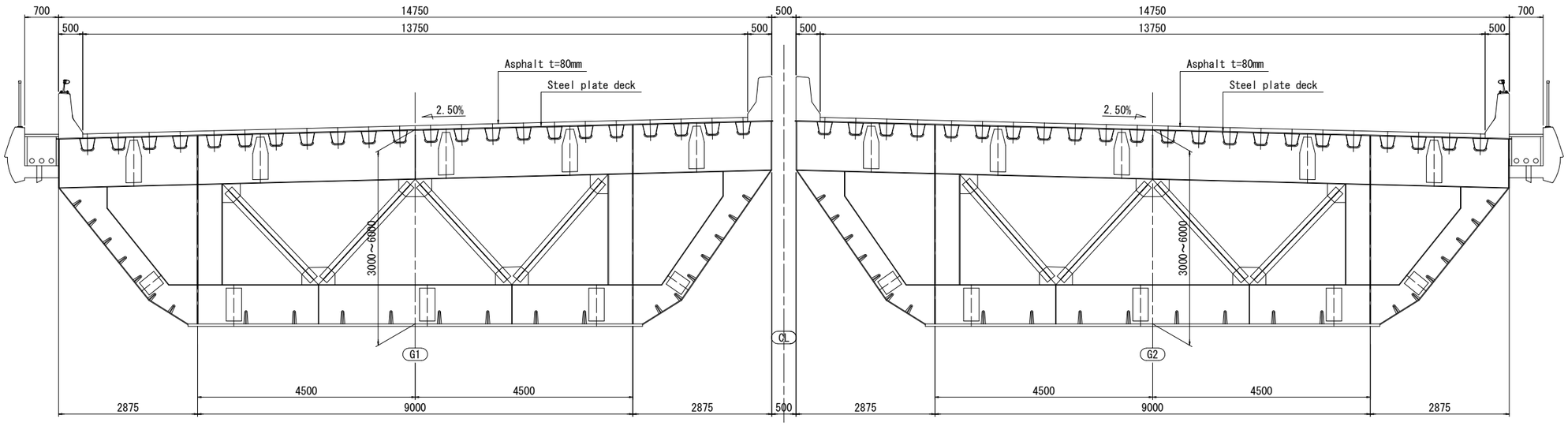

CROSS SECTION S=1:50

Mark	Date	By	Rev.

MMRDA
MUMBAI METROPOLITAN REGION DEVELOPMENT AUTHORITY

The Preparatory Survey on the Project for Construction of Mumbai Trans Harbour Link

JICA
JAPAN INTERNATIONAL COOPERATION AGENCY

Oriental Consultants Global Co., Ltd.
East Nippon Expressway Co., Ltd.
Nippon Koei Co., Ltd.
Nippon Engineering Consultants Co., Ltd.

Drawing Title: General View of Superstructure of Steel Box Girder Bridge with Steel Slab (MP144-MP148)

Drawing Status:

Drawing No.: B-056

Rev.:

General View of Superstructure of Steel Box Girder Bridge with Steel Slab (MP202-MP207)

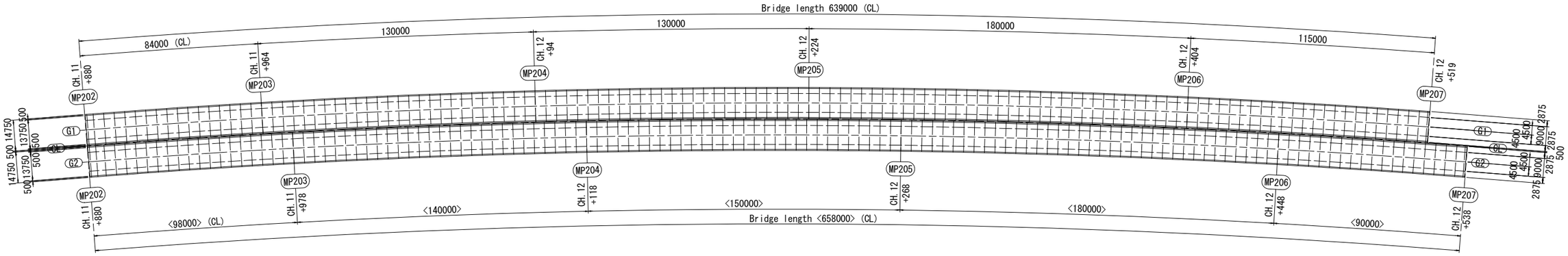

PLAN S=1:1000

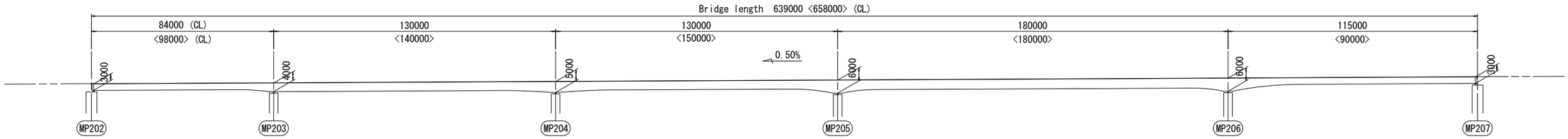

PROFILE S=1:1000

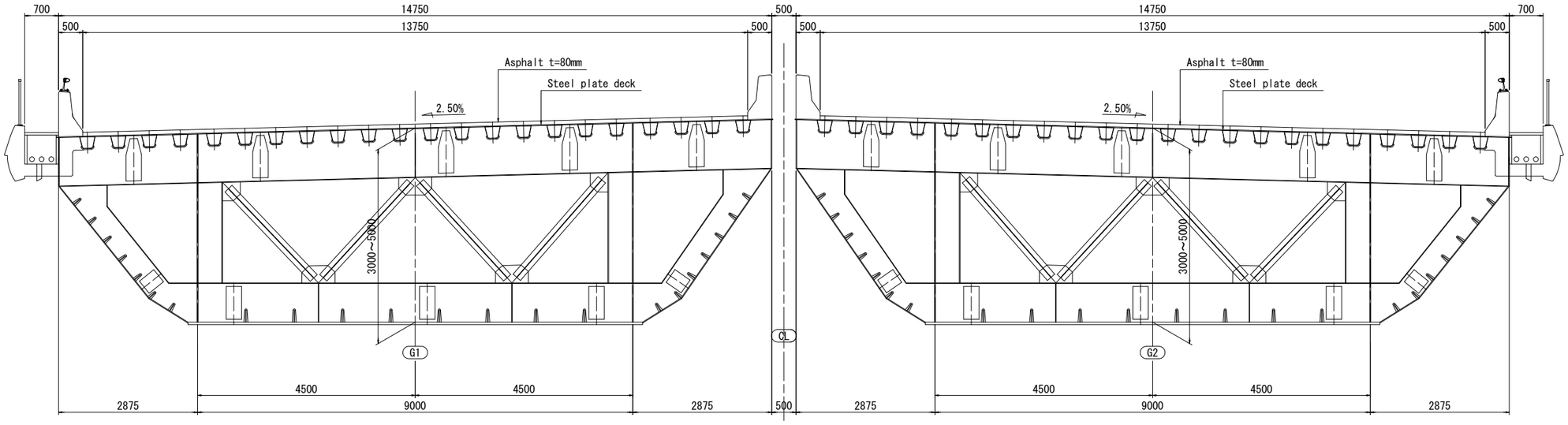

CROSS SECTION S=1:50

Mark	Date	By	Rev.

MMRDA
MUMBAI METROPOLITAN REGION DEVELOPMENT AUTHORITY

The Preparatory Survey on the Project for Construction of Mumbai Trans Harbour Link

JICA
JAPAN INTERNATIONAL COOPERATION AGENCY

Oriental Consultants Global Co., Ltd.
East Nippon Expressway Co., Ltd.
Nippon Koei Co., Ltd.
Nippon Engineering Consultants Co., Ltd.

Drawing Title: General View of Superstructure of Steel Box Girder Bridge with Steel Slab (MP202-MP207)

Drawing Status:

Drawing No.: B-057

Rev.:

General View of Superstructure of Steel Box Girder Bridge with Steel Slab (MP207-MP213)

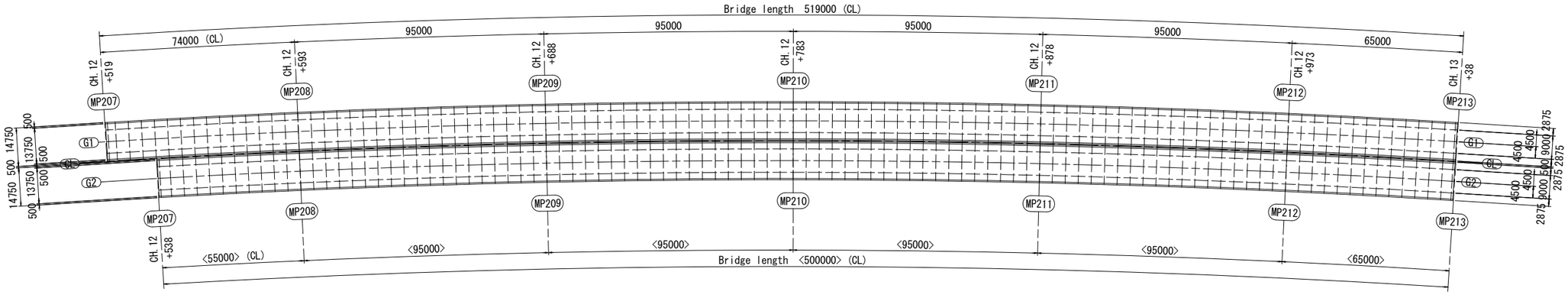

PLAN S=1:900

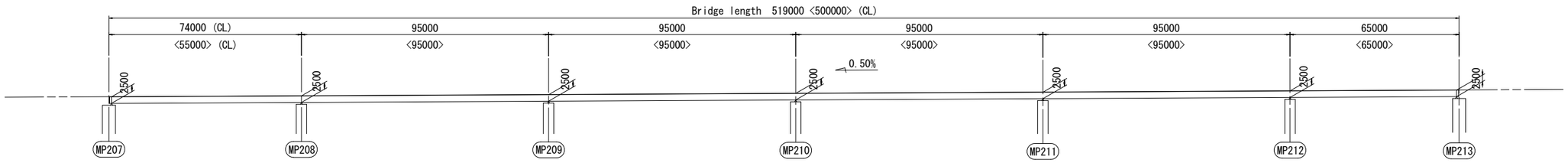

PROFILE S=1:900

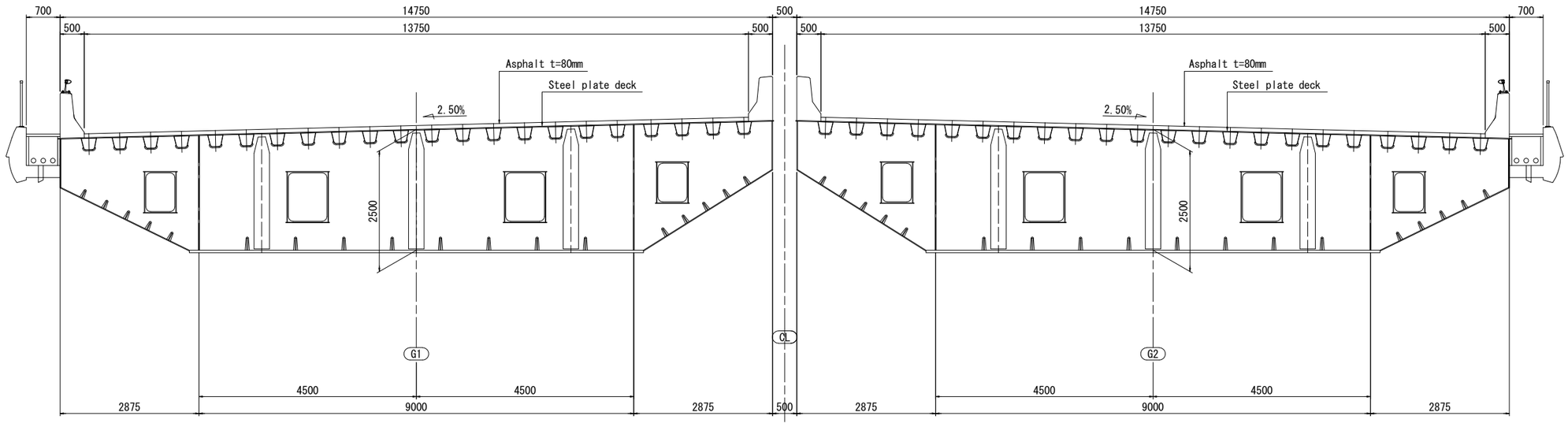

CROSS SECTION S=1:50

Mark	Date	By	Rev.

MMRDA
MUMBAI METROPOLITAN REGION DEVELOPMENT AUTHORITY

The Preparatory Survey on the Project for Construction of Mumbai Trans Harbour Link

JICA
JAPAN INTERNATIONAL COOPERATION AGENCY

Oriental Consultants Global Co., Ltd.
East Nippon Expressway Co., Ltd.
Nippon Koei Co., Ltd.
Nippon Engineering Consultants Co., Ltd.

Drawing Title: General View of Superstructure of Steel Box Girder Bridge with Steel Slab (MP207-MP213)

Drawing Status

Drawing No. B-058

Rev.

General View of Superstructure of Steel Box Girder Bridge with Steel Slab (MP213-MP217)

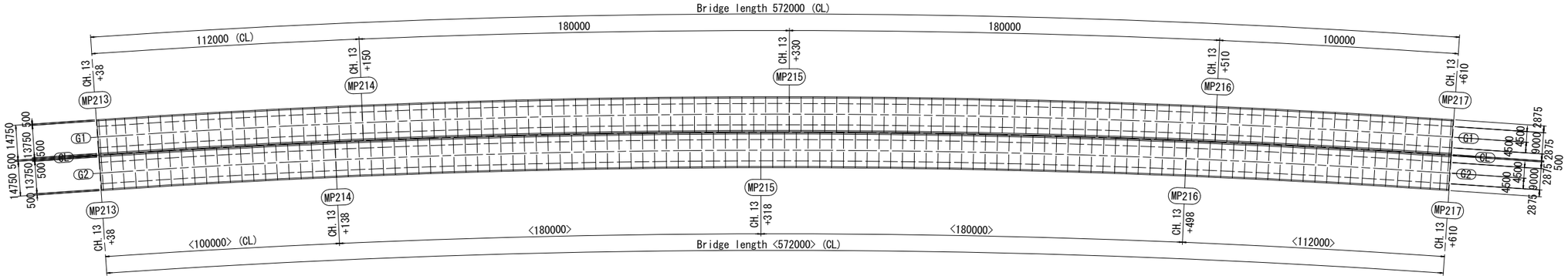

PLAN S=1:1000

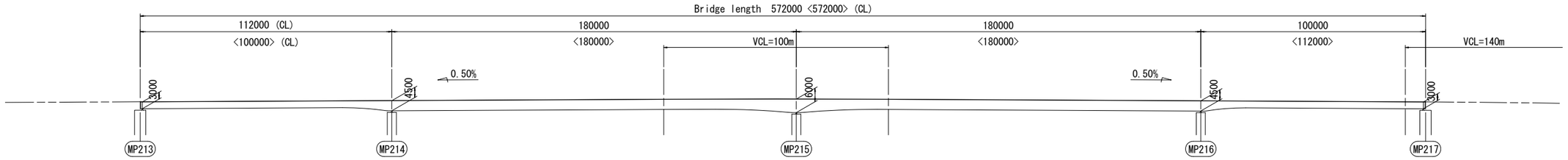

PROFILE S=1:1000

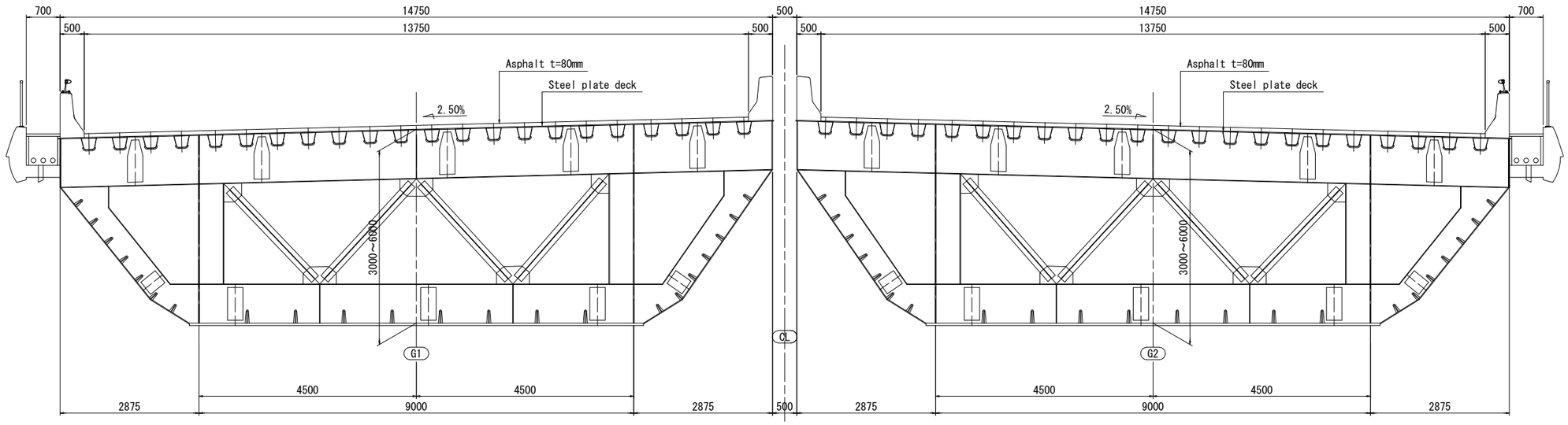

CROSS SECTION S=1:50

Mark	Date	By	Rev.

MMRDA
MUMBAI METROPOLITAN REGION DEVELOPMENT AUTHORITY

The Preparatory Survey on the Project for Construction of Mumbai Trans Harbour Link

JICA
JAPAN INTERNATIONAL COOPERATION AGENCY

Oriental Consultants Global Co., Ltd.
East Nippon Expressway Co., Ltd.
Nippon Koei Co., Ltd.
Nippon Engineering Consultants Co., Ltd.

Drawing Title: General View of Superstructure of Steel Box Girder Bridge with Steel Slab (MP213-MP217)

Drawing Status:

Drawing No.: B-059

Rev.:

General View of Superstructure of Steel Truss Bridge (MP329-MP330)

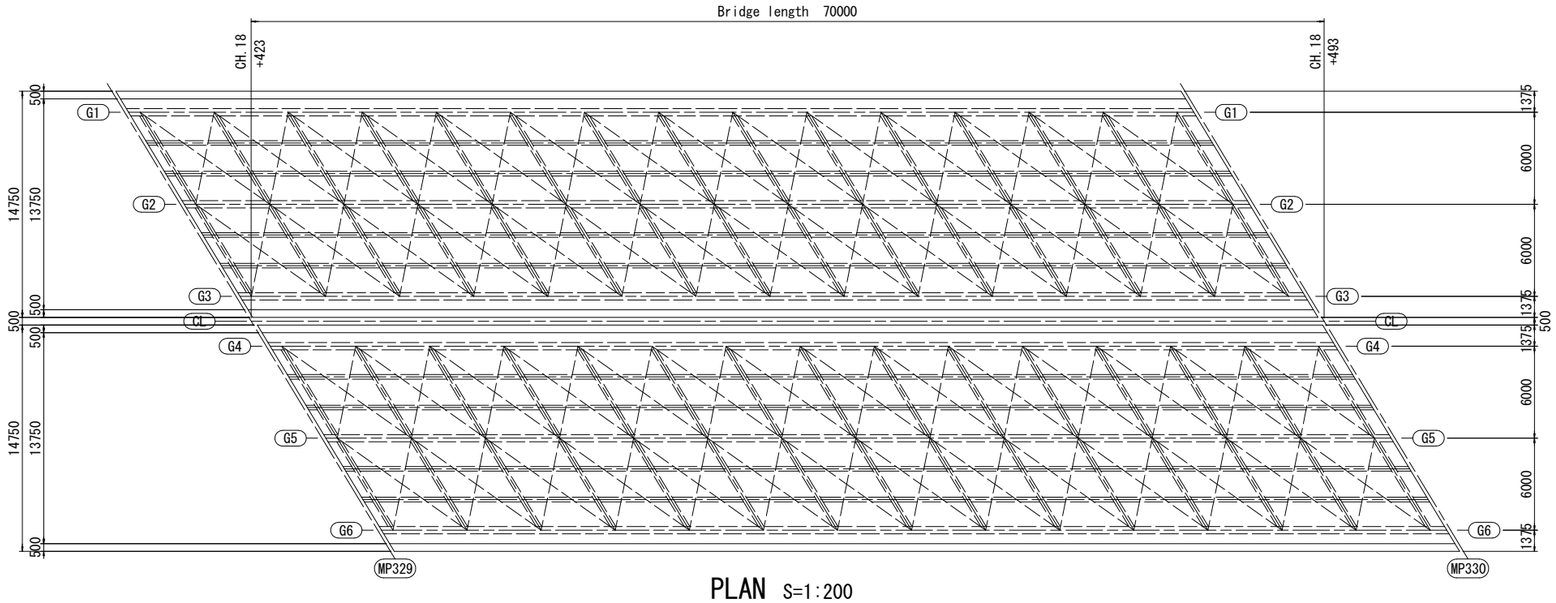

PLAN S=1:200

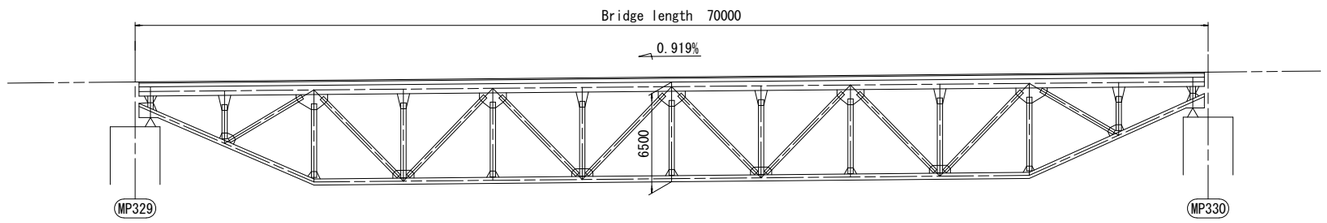

PROFILE S=1:200

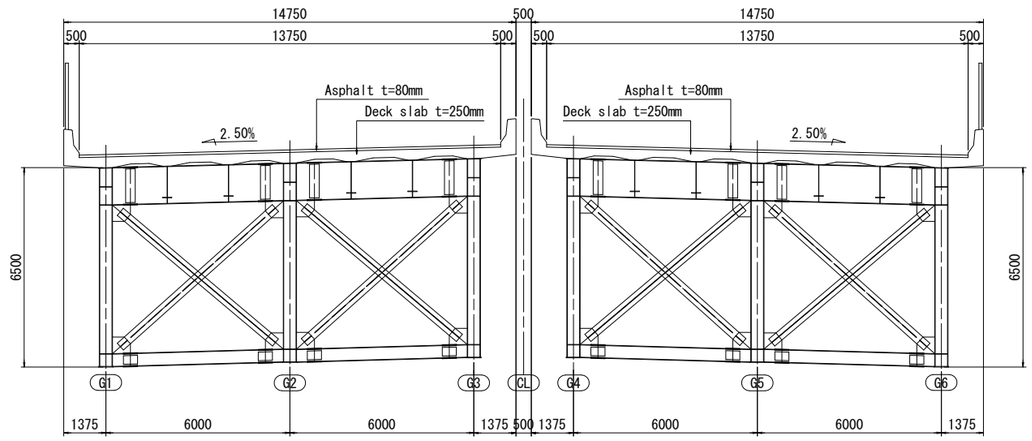

CROSS SECTION S=1:100

Mark	Date	By	Rev.

MMRDA
MUMBAI METROPOLITAN REGION DEVELOPMENT AUTHORITY

The Preparatory Survey on the Project for Construction of Mumbai Trans Harbour Link

JICA
JAPAN INTERNATIONAL COOPERATION AGENCY

Oriental Consultants Global Co., Ltd.
East Nippon Expressway Co., Ltd.
Nippon Koei Co., Ltd.
Nippon Engineering Consultants Co., Ltd.

Drawing Title: General View of Superstructure of Steel Truss Bridge (MP329-MP330)

Drawing Status:

Drawing No.: B-060

Rev.:

General View of Superstructure of Steel Truss Bridge (LP31-LP32)

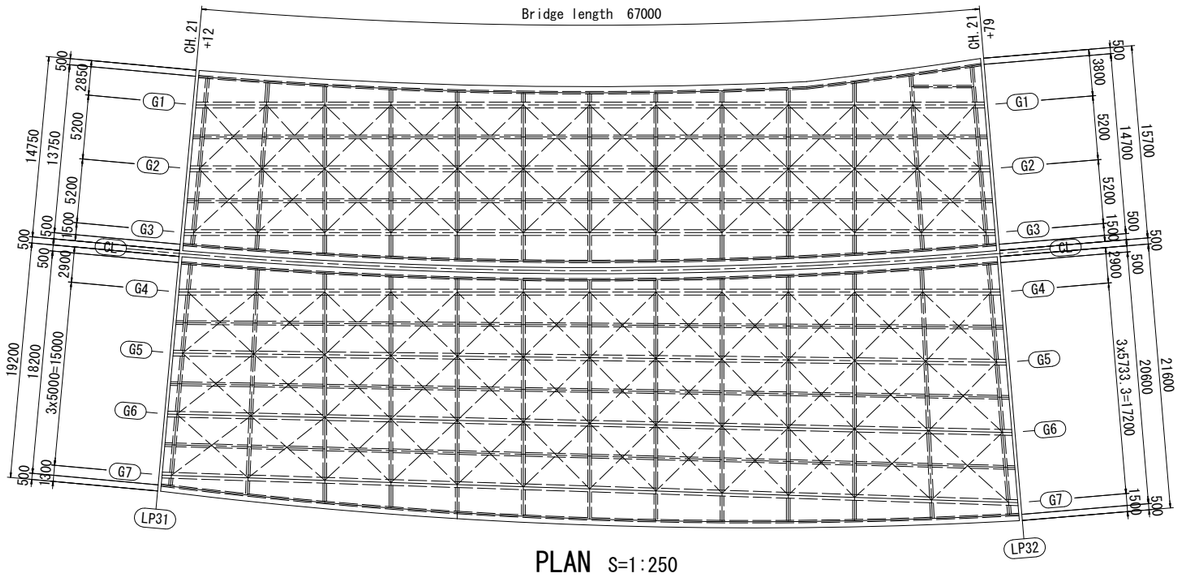

PLAN S=1:250

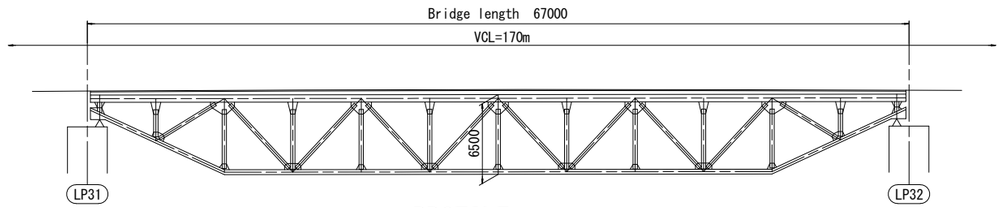

PROFILE S=1:250

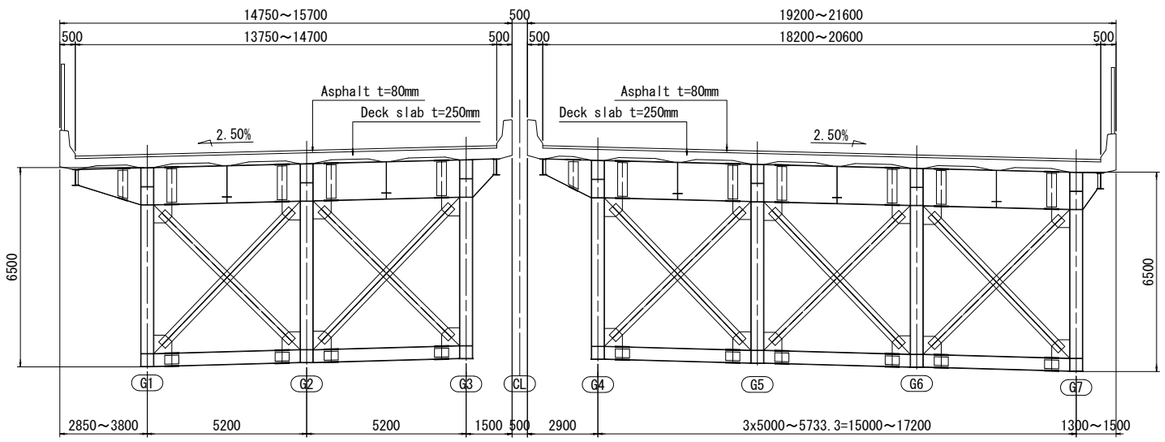

CROSS SECTION S=1:100

Mark	Date	By	Rev.

MMRDA
MUMBAI METROPOLITAN REGION DEVELOPMENT AUTHORITY

The Preparatory Survey on the Project for Construction of Mumbai Trans Harbour Link

JICA
JAPAN INTERNATIONAL COOPERATION AGENCY

Oriental Consultants Global Co., Ltd.
East Nippon Expressway Co., Ltd.
Nippon Koei Co., Ltd.
Nippon Engineering Consultants Co., Ltd.

Drawing Title: General View of Superstructure of Steel Truss Bridge (LP31-LP32)

Drawing Status:

Drawing No.: B-061

Rev.:

General View of Superstructure of Steel Truss Bridge (LP37-LP40)

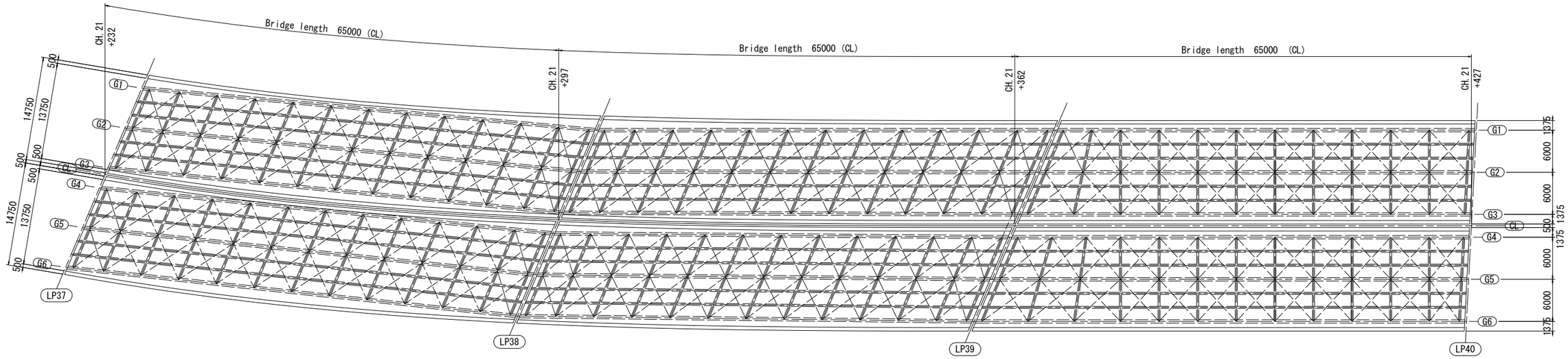

PLAN S=1:300

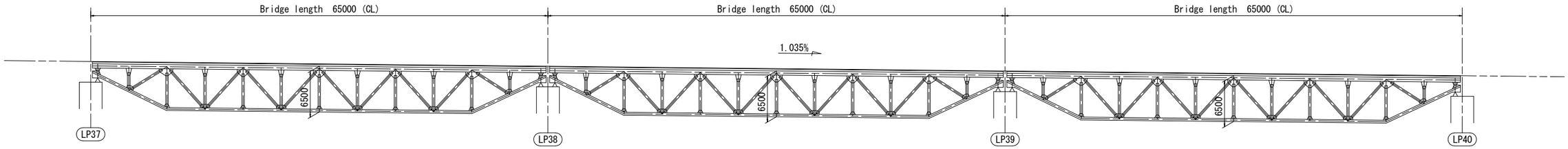

PROFILE S=1:300

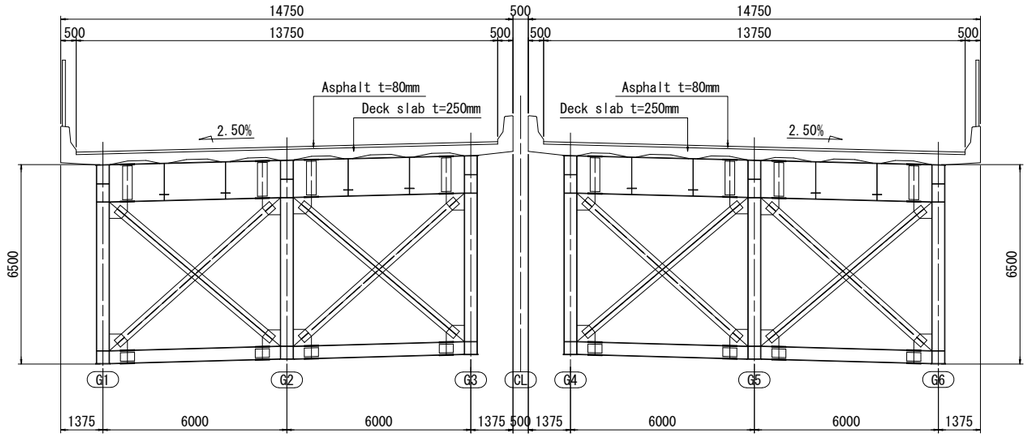

CROSS SECTION S=1:100

Mark	Date	By	Rev.

MMRDA
MUMBAI METROPOLITAN REGION DEVELOPMENT AUTHORITY

The Preparatory Survey on the Project for Construction of Mumbai Trans Harbour Link

JICA
JAPAN INTERNATIONAL COOPERATION AGENCY

Oriental Consultants Global Co., Ltd.
East Nippon Expressway Co., Ltd.
Nippon Koei Co., Ltd.
Nippon Engineering Consultants Co., Ltd.

Drawing Title: General View of Superstructure of Steel Truss Bridge (LP37-LP40)

Drawing Status:

Drawing No.: B-062

Rev.:

General View of Superstructure of Steel Box Girder Bridge (LP37-MPP3)

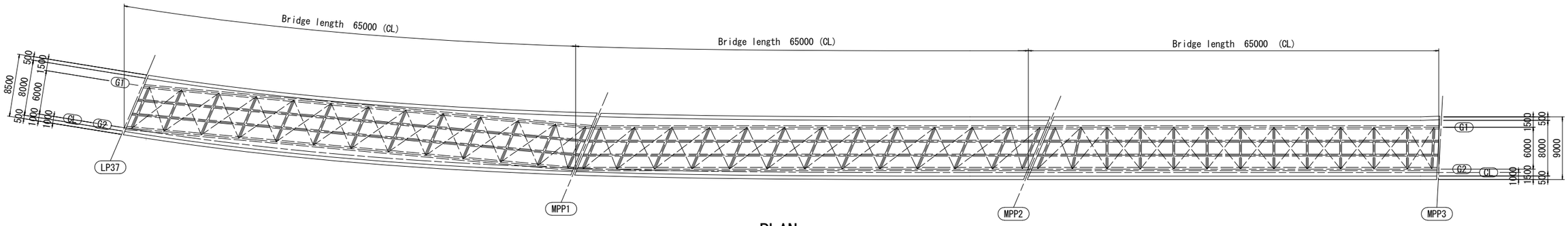

PLAN S=1:300

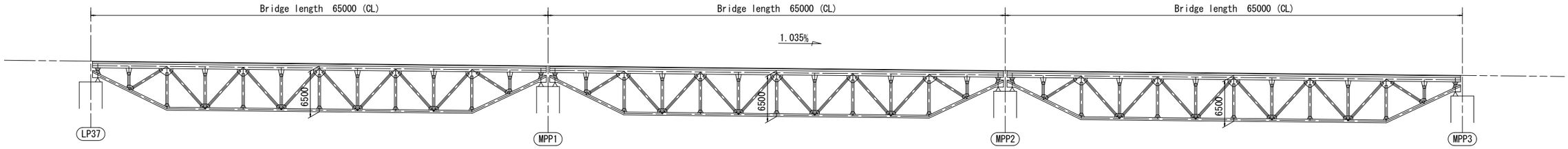

PROFILE S=1:300

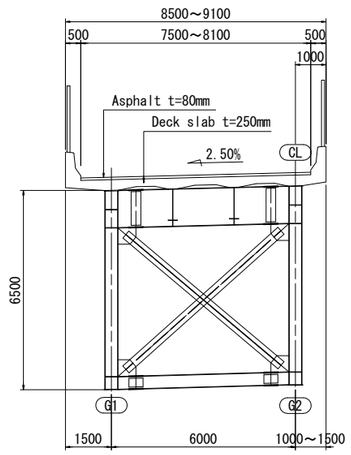

CROSS SECTION S=1:100

Mark	Date	By	Rev.

MMRDA
MUMBAI METROPOLITAN REGION DEVELOPMENT AUTHORITY

The Preparatory Survey on the Project for Construction of Mumbai Trans Harbour Link

JICA
JAPAN INTERNATIONAL COOPERATION AGENCY

Oriental Consultants Global Co., Ltd.
East Nippon Expressway Co., Ltd.
Nippon Koei Co., Ltd.
Nippon Engineering Consultants Co., Ltd.

Drawing Title: General View of Superstructure of Steel Box Girder Bridge (LP37-MPP3)

Drawing Status:

Drawing No.: B-063

Rev.:

General View of Superstructure of Steel Box Girder Bridge (LP37-JMP3)

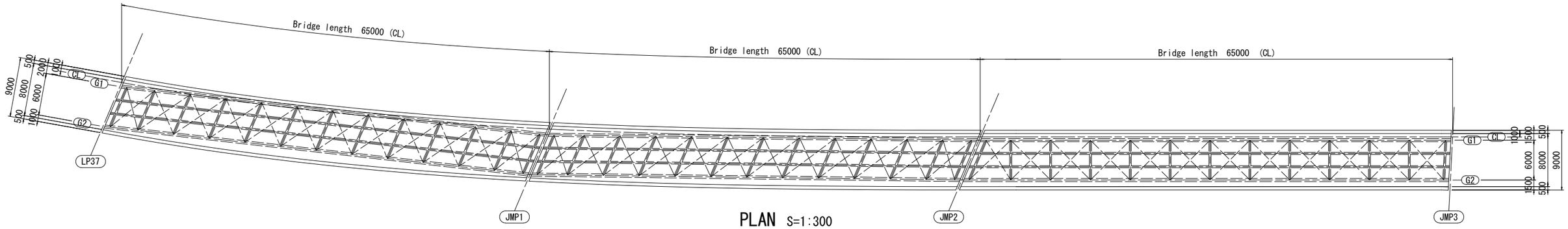

PLAN S=1:300

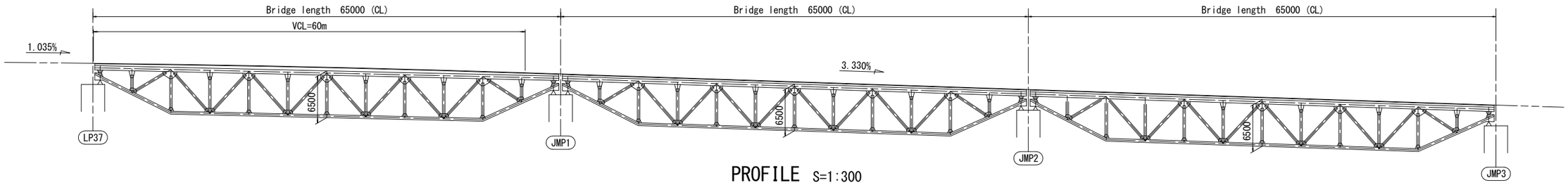

PROFILE S=1:300

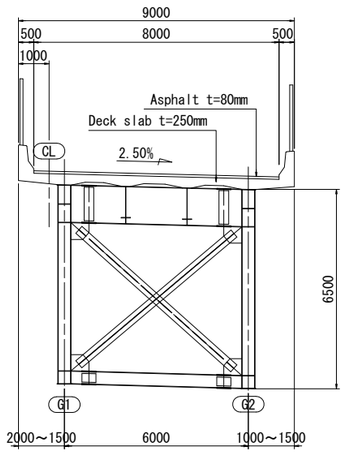

CROSS SECTION S=1:100

Mark	Date	By	Rev.

MMRDA
MUMBAI METROPOLITAN REGION DEVELOPMENT AUTHORITY

The Preparatory Survey on the Project for Construction of Mumbai Trans Harbour Link

JICA
JAPAN INTERNATIONAL COOPERATION AGENCY

Oriental Consultants Global Co., Ltd.
East Nippon Expressway Co., Ltd.
Nippon Koei Co., Ltd.
Nippon Engineering Consultants Co., Ltd.

Drawing Title: General View of Superstructure of Steel Box Girder Bridge (LP37-JMP3)

Drawing Status:

Drawing No.: B-064

Rev.:

General View of Substructure at sea (1/4)

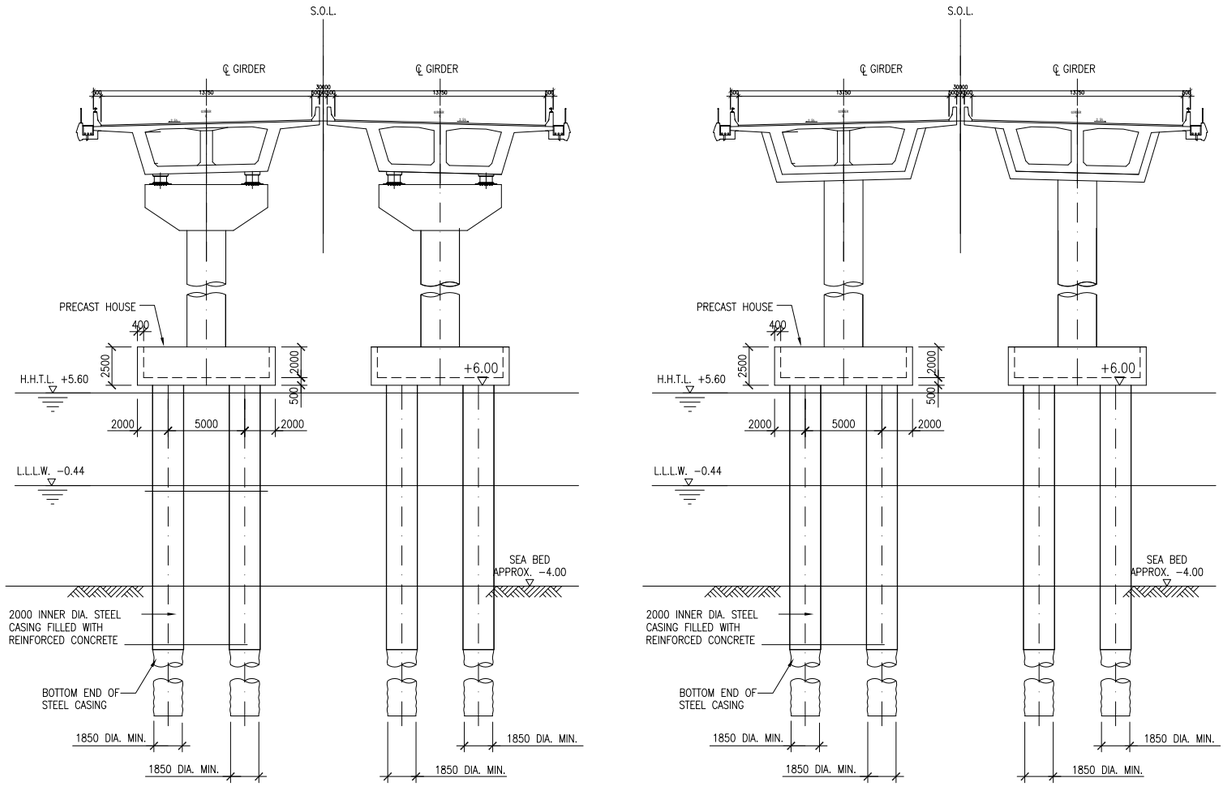

TYPICAL CROSS SECTION OF PIER AT SEA

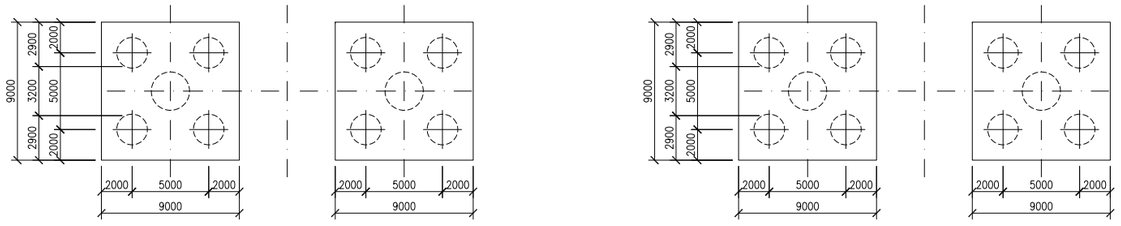

Mark	Date	By	Rev.

MMRDA
MUMBAI METROPOLITAN REGION DEVELOPMENT AUTHORITY

The Preparatory Survey on the Project for Construction of Mumbai Trans Harbour Link

JICA
JAPAN INTERNATIONAL COOPERATION AGENCY

Oriental Consultants Global Co., Ltd.
East Nippon Expressway Co., Ltd.
Nippon Koei Co., Ltd.
Nippon Engineering Consultants Co., Ltd.

Drawing Title: General View of Substructure at sea (1/4)

Drawing Status:

Drawing No.: B-065

Rev.:

General View of Substructure at sea (2/4)

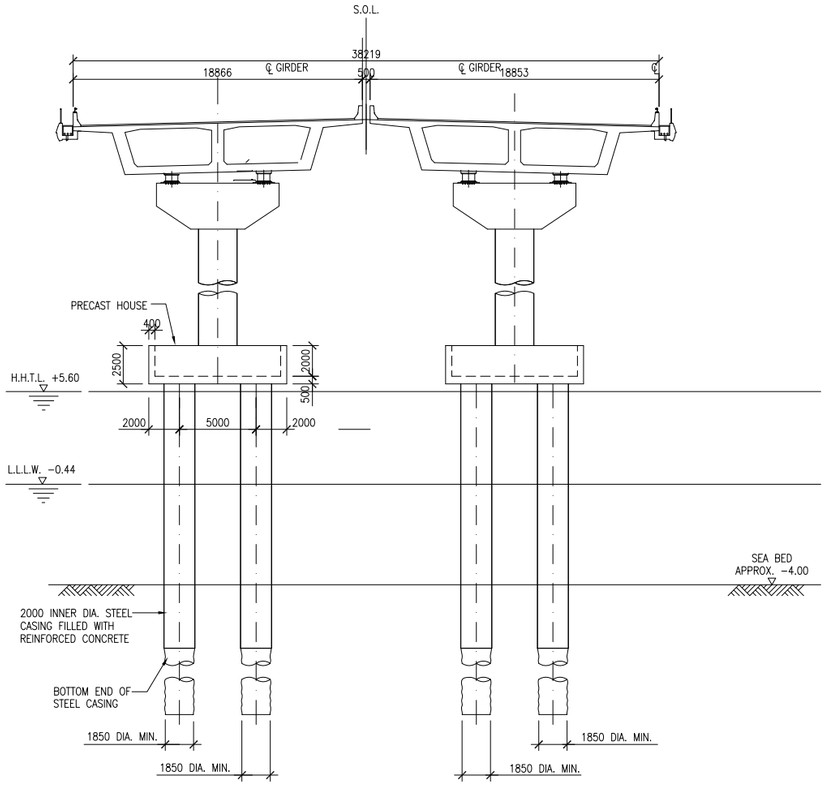

CROSS SECTION AT MP PIER 8

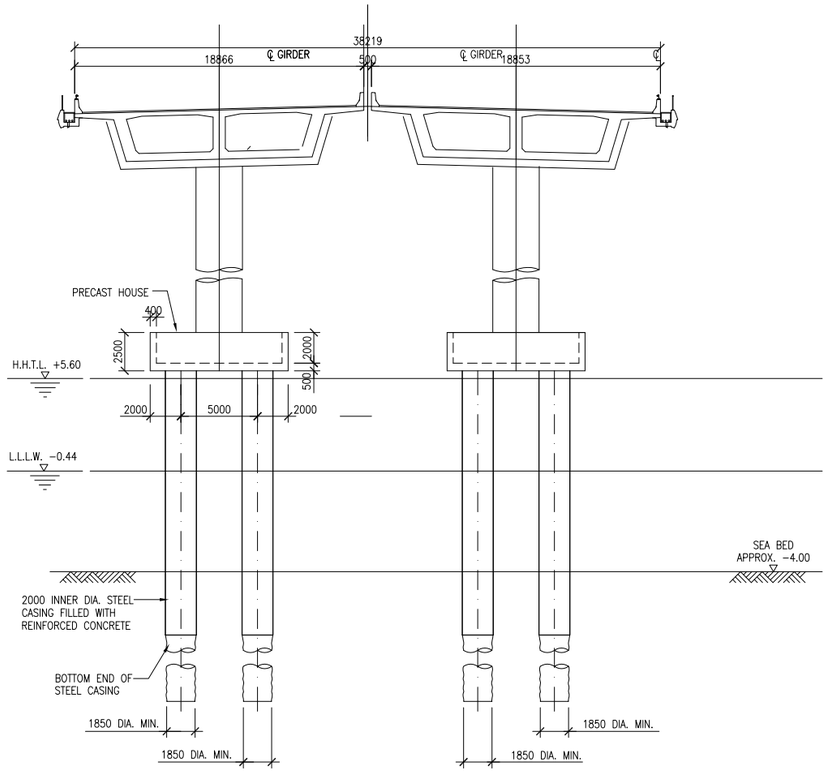

CROSS SECTION AT MP PIER 9

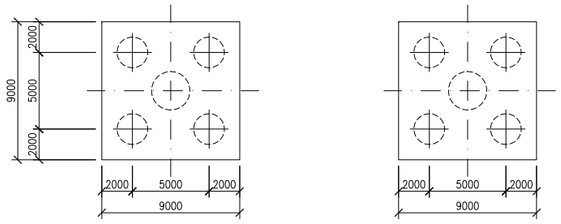

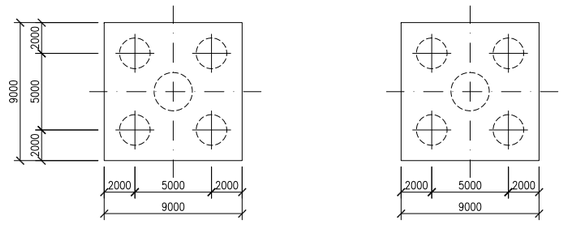

Mark	Date	By	Rev.

MMRDA
MUMBAI METROPOLITAN REGION DEVELOPMENT AUTHORITY

The Preparatory Survey on the Project for Construction of Mumbai Trans Harbour Link

JICA
JAPAN INTERNATIONAL COOPERATION AGENCY

Oriental Consultants Global Co., Ltd.
East Nippon Expressway Co., Ltd.
Nippon Koei Co., Ltd.
Nippon Engineering Consultants Co., Ltd.

Drawing Title: General View of Substructure at sea (2/4)

Drawing Status:

Drawing No.: B-066

Rev.:

General View of Substructure at sea (3/4)

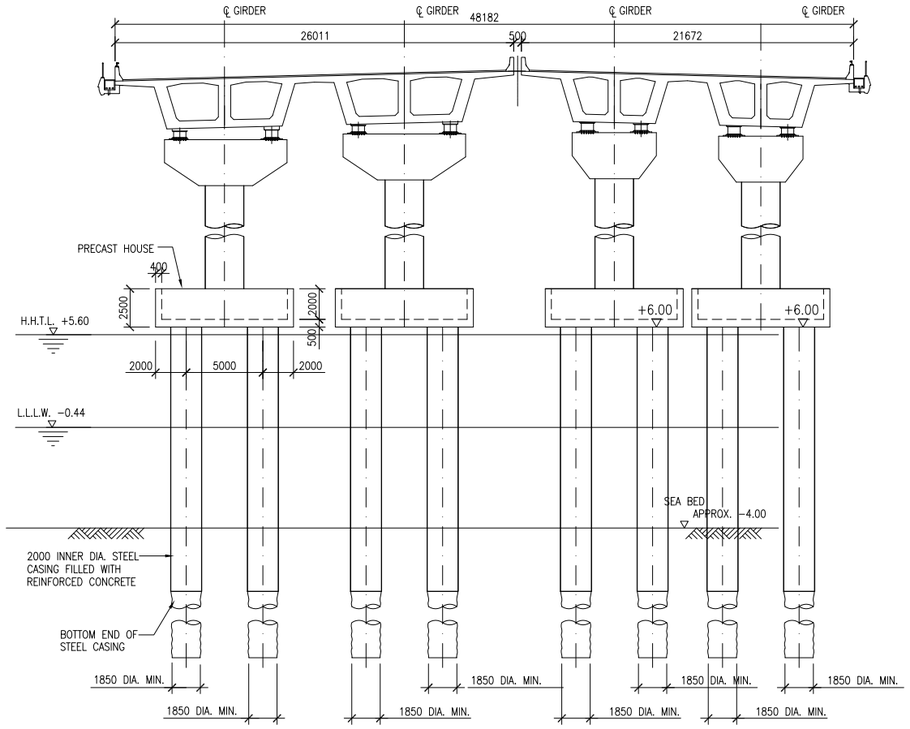

CROSS SECTION AT MP PIER _6

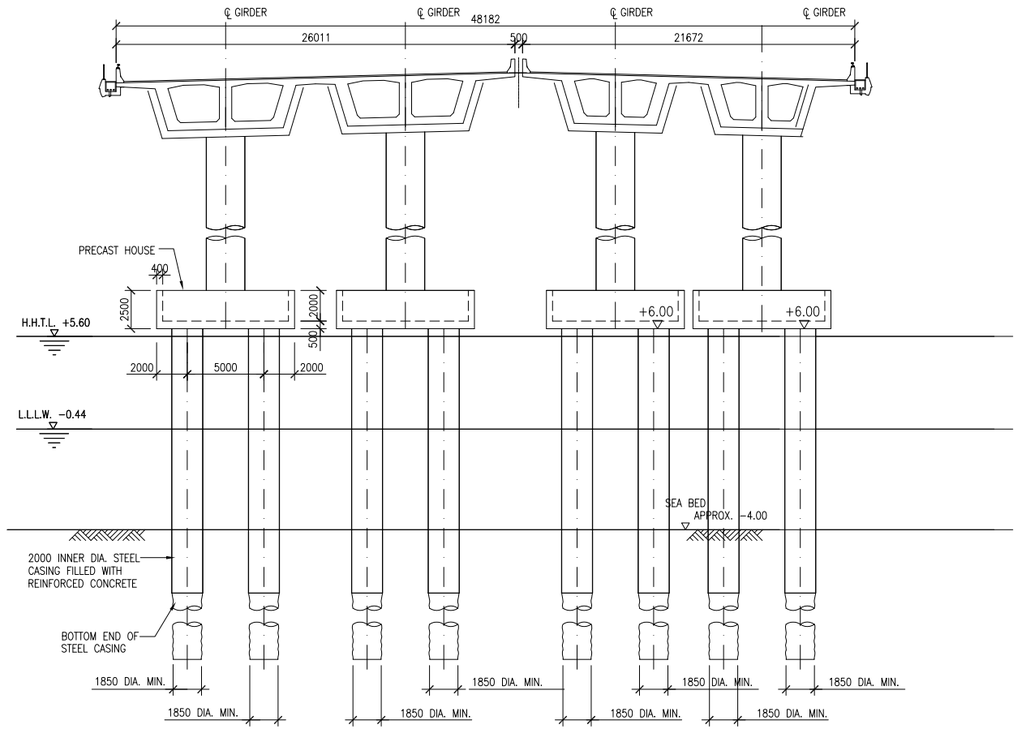

CROSS SECTION AT MP PIER _7

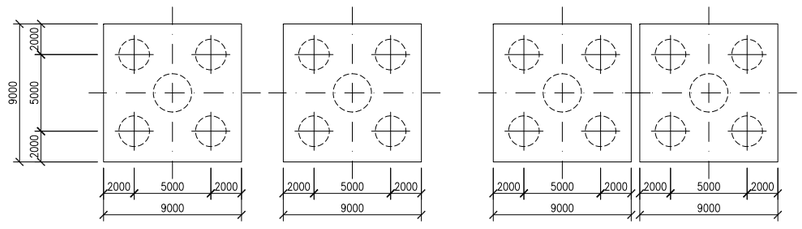

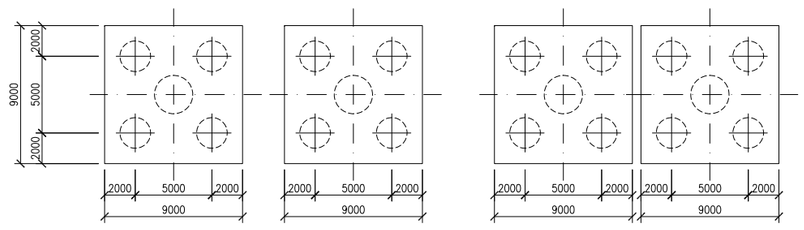

Mark	Date	By	Rev.

MMRDA
MUMBAI METROPOLITAN REGION DEVELOPMENT AUTHORITY

The Preparatory Survey on the Project for Construction of Mumbai Trans Harbour Link

JICA
JAPAN INTERNATIONAL COOPERATION AGENCY

Oriental Consultants Global Co., Ltd.
East Nippon Expressway Co., Ltd.
Nippon Koei Co., Ltd.
Nippon Engineering Consultants Co., Ltd.

Drawing Title: General View of Substructure at sea (3/4)

Drawing Status:

Drawing No.: B-067

Rev.:

General View of Substructure at sea (4/4)

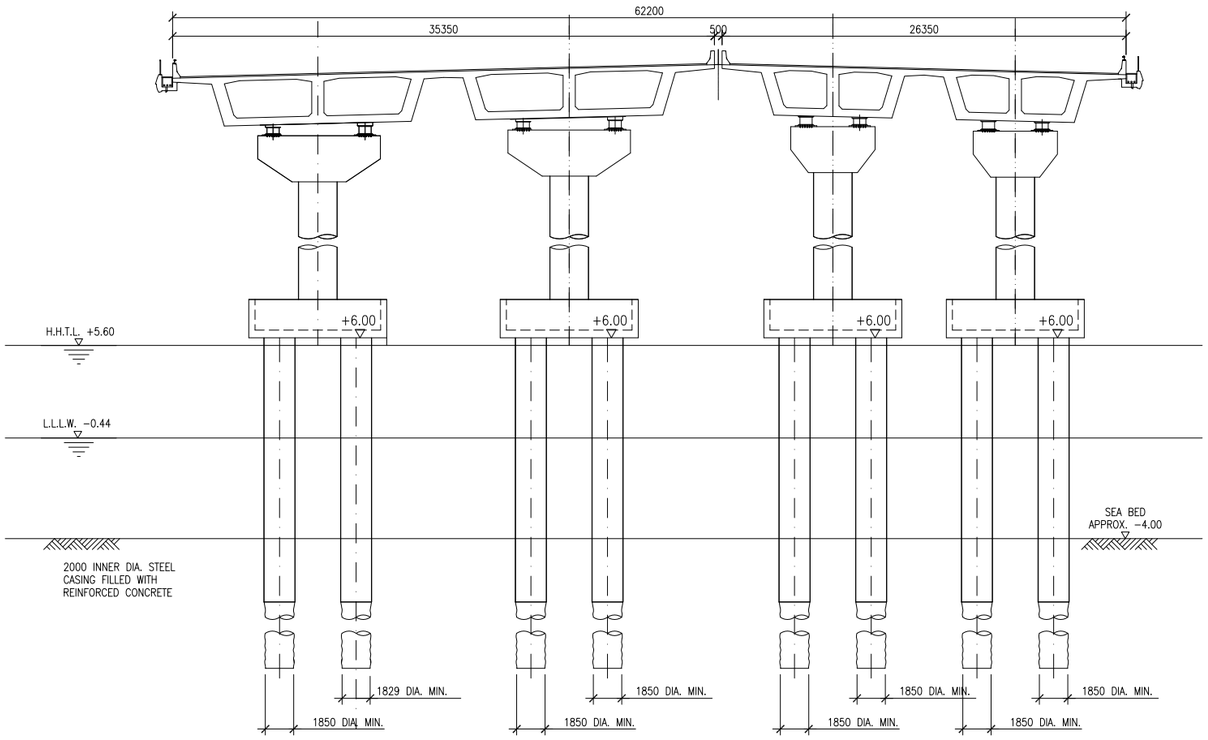

CROSS SECTION AT MP PIER 3

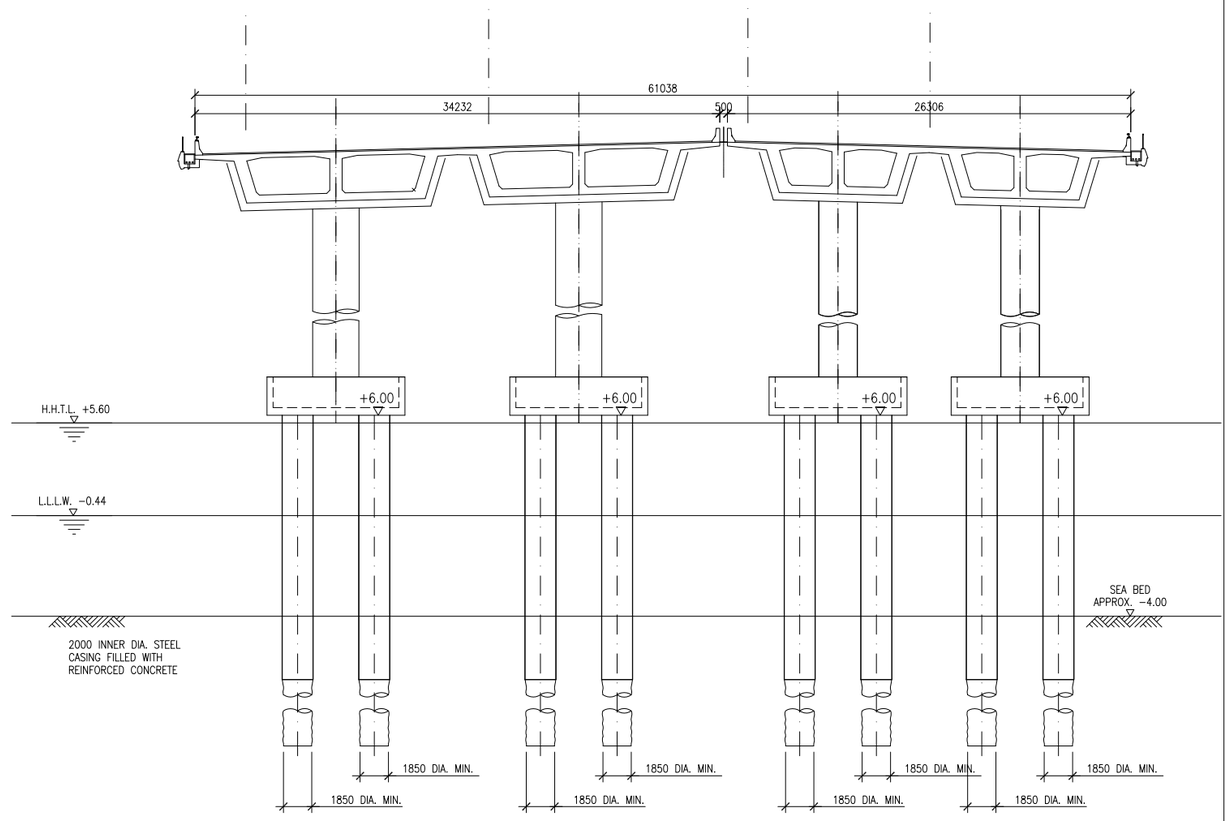

CROSS SECTION AT MP PIER 2・4・5

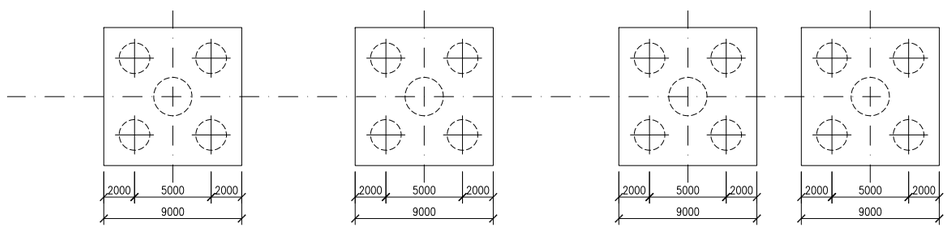

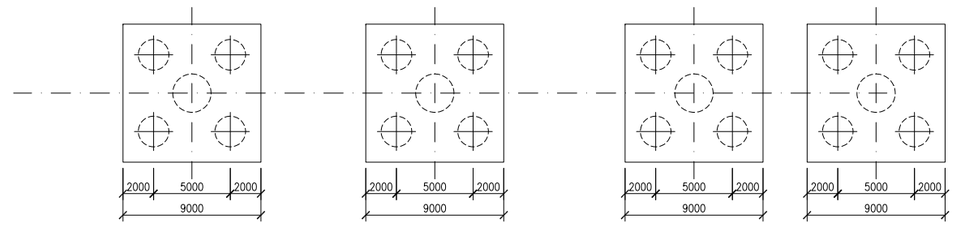

Mark	Date	By	Rev.

MMRDA
MUMBAI METROPOLITAN REGION DEVELOPMENT AUTHORITY

The Preparatory Survey on the Project for Construction of Mumbai Trans Harbour Link

JICA
JAPAN INTERNATIONAL COOPERATION AGENCY

Oriental Consultants Global Co., Ltd.
East Nippon Expressway Co., Ltd.
Nippon Koei Co., Ltd.
Nippon Engineering Consultants Co., Ltd.

Drawing Title: General View of Substructure at sea (4/4)

Drawing Status:

Drawing No.: B-068

Rev.:

General View of Substructure at Land (1/2)

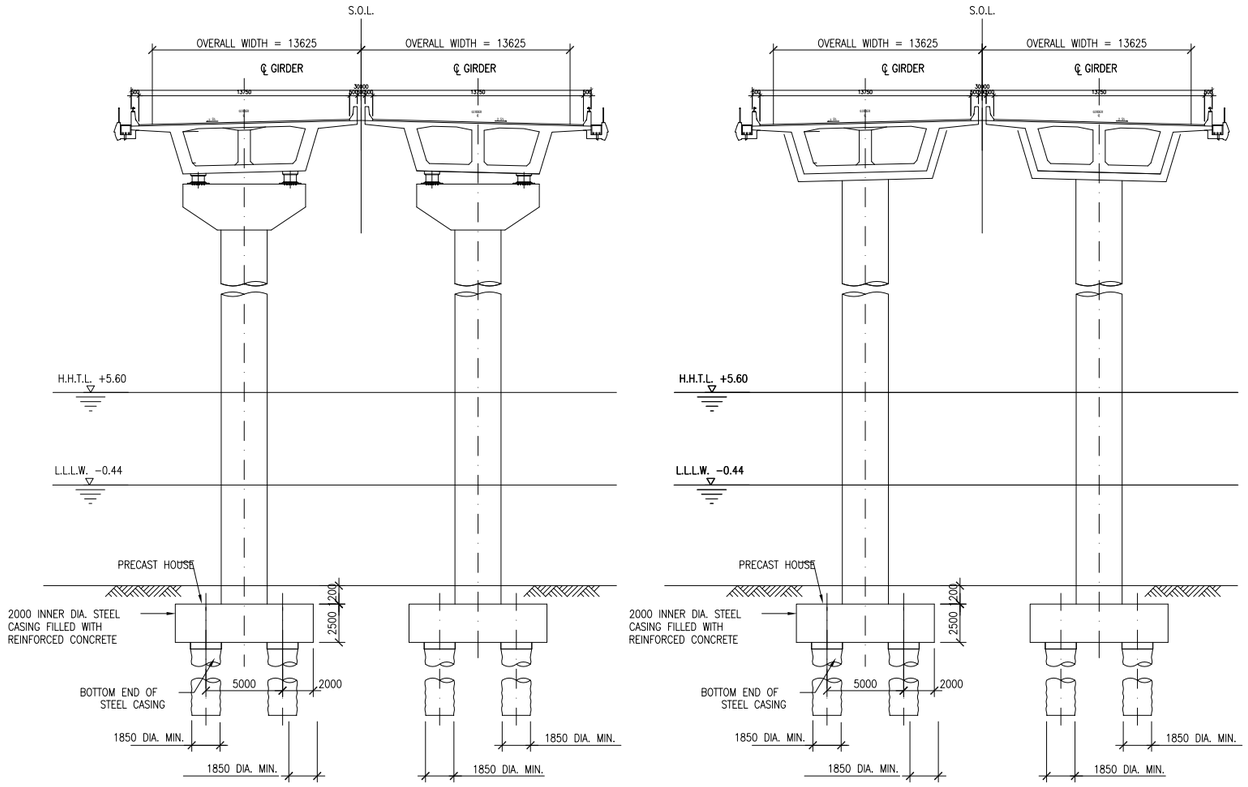

TYPICAL CROSS SECTION OF PIER AT LAND(SPAN=50M)
(NAVI MUMBAI AIRPORT SIDE)

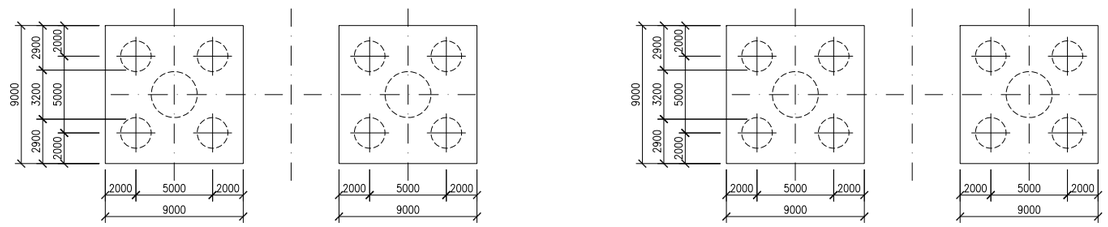

Mark	Date	By	Rev.

MMRDA
MUMBAI METROPOLITAN REGION DEVELOPMENT AUTHORITY

The Preparatory Survey on the Project for Construction of Mumbai Trans Harbour Link

JICA
JAPAN INTERNATIONAL COOPERATION AGENCY

Oriental Consultants Global Co., Ltd.
East Nippon Expressway Co., Ltd.
Nippon Koei Co., Ltd.
Nippon Engineering Consultants Co., Ltd.

Drawing Title: General View of Substructure at Land (1/2)

Drawing Status:

Drawing No.: B-069

Rev.:

General View of Substructure at Land (2/2)

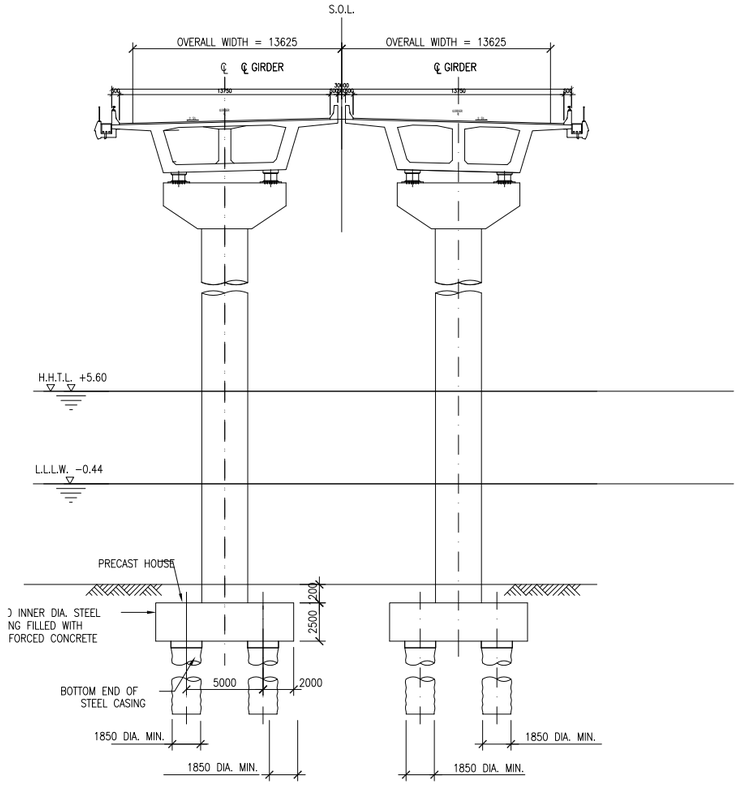

CROSS SECTION AT MP PIER 290

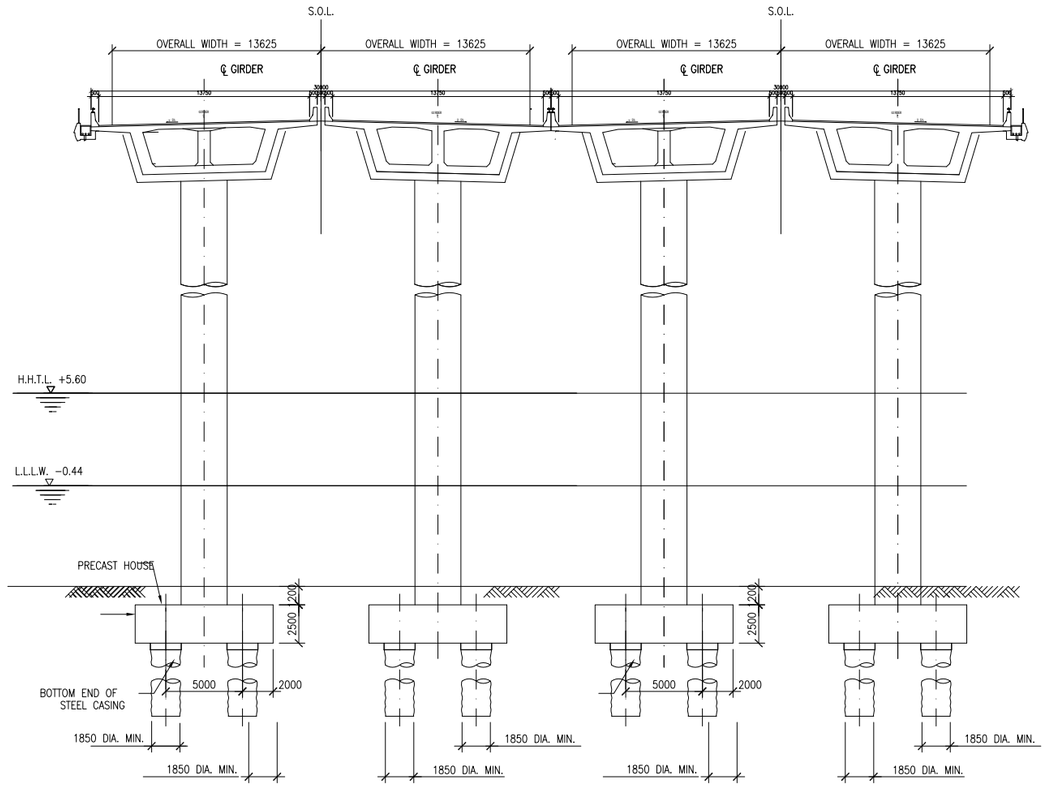

CROSS SECTION AT MP PIER 285,286,287

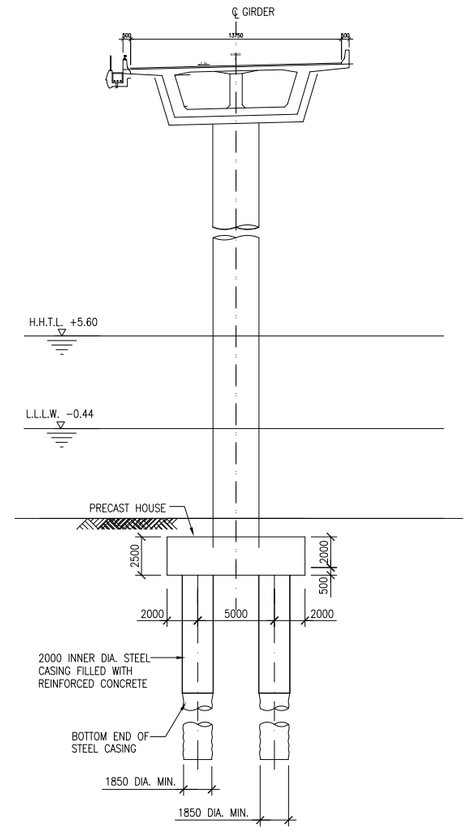

CROSS SECTION AT MP PIER 288

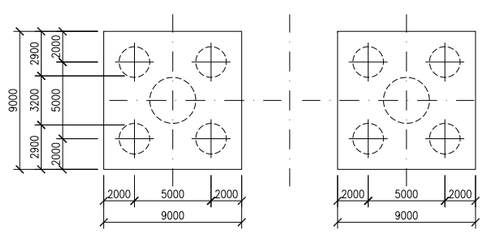

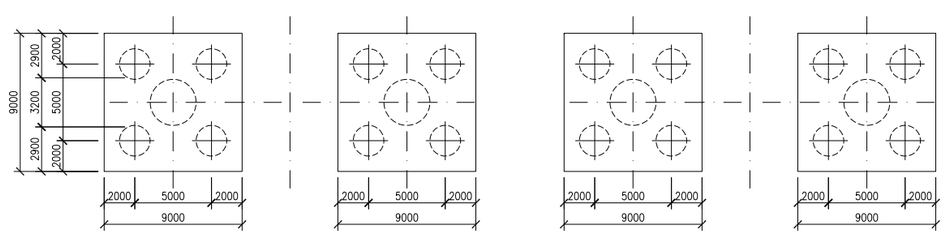

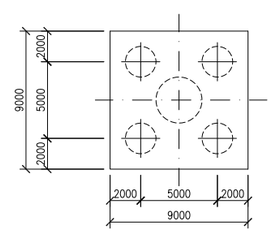

Mark	Date	By	Rev.

MMRDA
MUMBAI METROPOLITAN REGION DEVELOPMENT AUTHORITY

The Preparatory Survey on the Project for Construction of Mumbai Trans Harbour Link

JICA
JAPAN INTERNATIONAL COOPERATION AGENCY

Oriental Consultants Global Co., Ltd.
East Nippon Expressway Co., Ltd.
Nippon Koei Co., Ltd.
Nippon Engineering Consultants Co., Ltd.

Drawing Title: General View of Substructure at Land (2/2)

Drawing Status:

Drawing No.: B-070

Rev.:

General View of Substructure at Steel Box Girder Bridge with Steel Slab

SPAN 150m

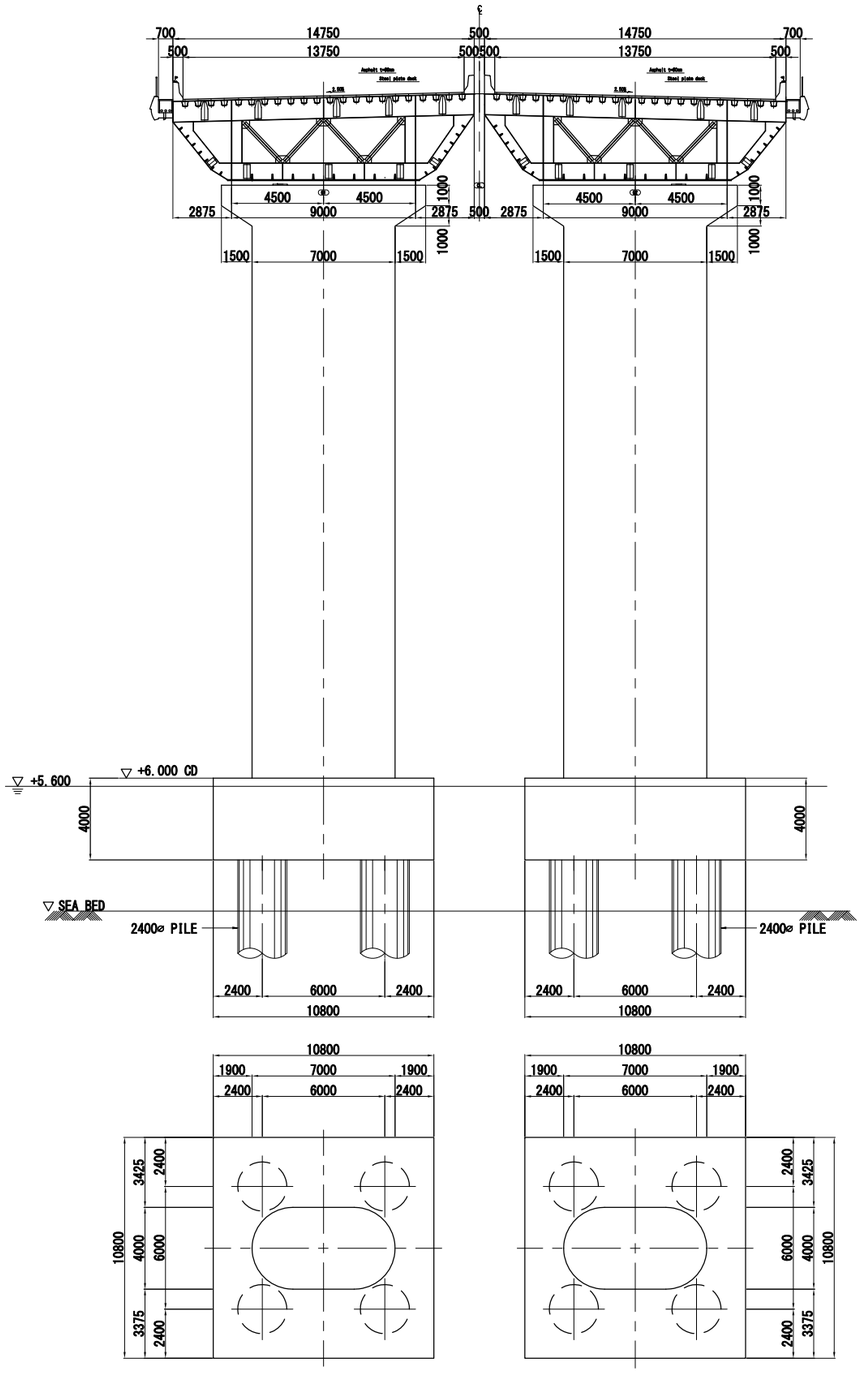

(MP59~62)

SPAN 180m

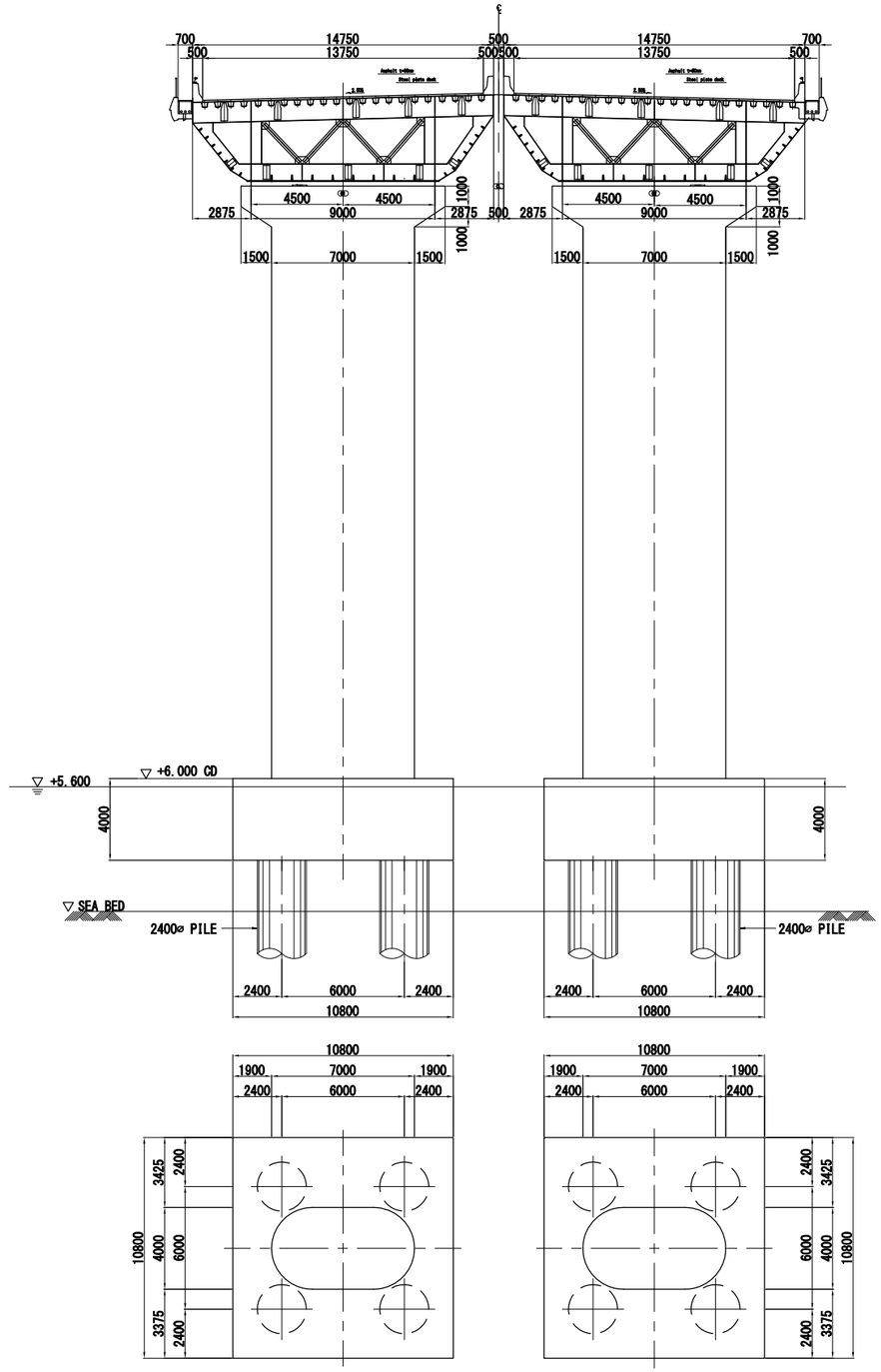

(MP87~93)

CROSS SECTION OF MARINE BRIDGE

Mark	Date	By	Rev.

MMRDA
MUMBAI METROPOLITAN REGION DEVELOPMENT AUTHORITY

The Preparatory Survey on the Project for Construction of Mumbai Trans Harbour Link

JICA
JAPAN INTERNATIONAL COOPERATION AGENCY

Oriental Consultants Global Co., Ltd.
East Nippon Expressway Co., Ltd.
Nippon Koei Co., Ltd.
Nippon Engineering Consultants Co., Ltd.

Drawing Title: General View of Substructure at Steel Box Girder Bridge with Steel Slab

Drawing Status:

Drawing No.: B-071

Rev.:

Plan of Sewri Interchange

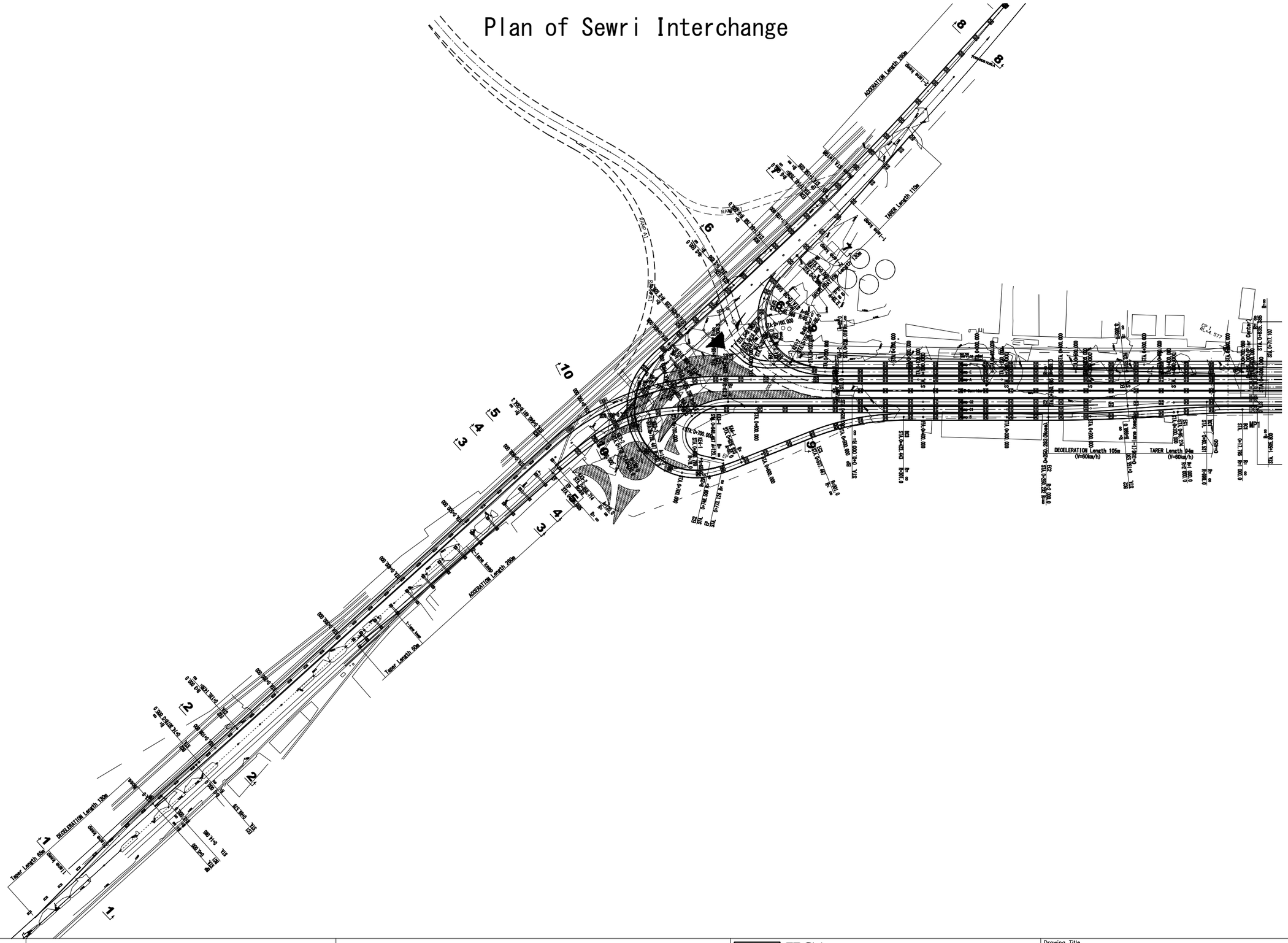

Mark	Date	By	Rev.

MMRDA
MUMBAI METROPOLITAN REGION DEVELOPMENT AUTHORITY

The Preparatory Survey on the Project for Construction of Mumbai Trans Harbour Link

JICA
JAPAN INTERNATIONAL COOPERATION AGENCY

Oriental Consultants Global Co., Ltd.
East Nippon Expressway Co., Ltd.
Nippon Koei Co., Ltd.
Nippon Engineering Consultants Co., Ltd.

Drawing Title: Plan of Sewri Interchange

Drawing Status:

Drawing No.: B-072

Rev.:

General View of RAMP 'A' at Sewri Interchange

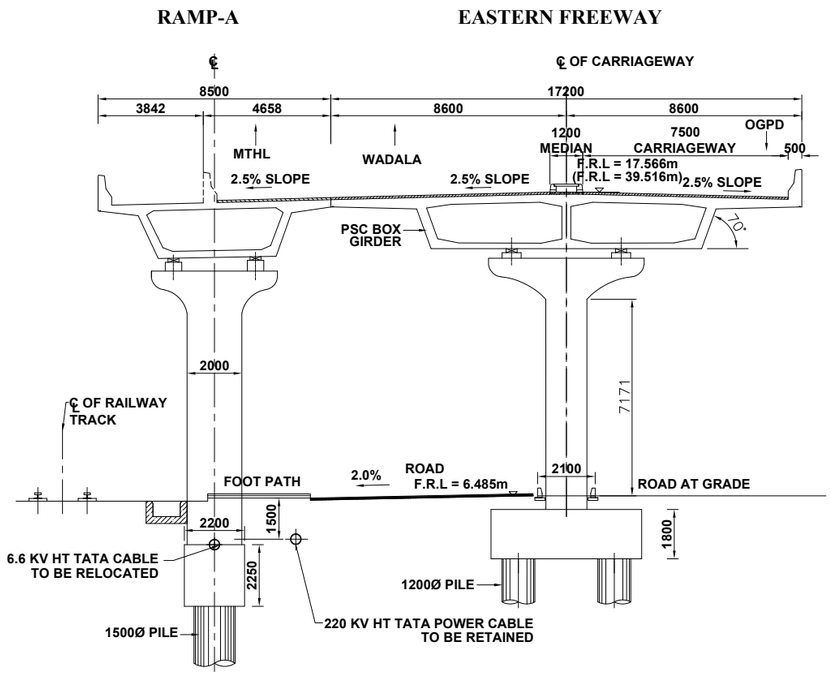

CROSS SECTION AT 1-1
(A Ramp - PIER 4)

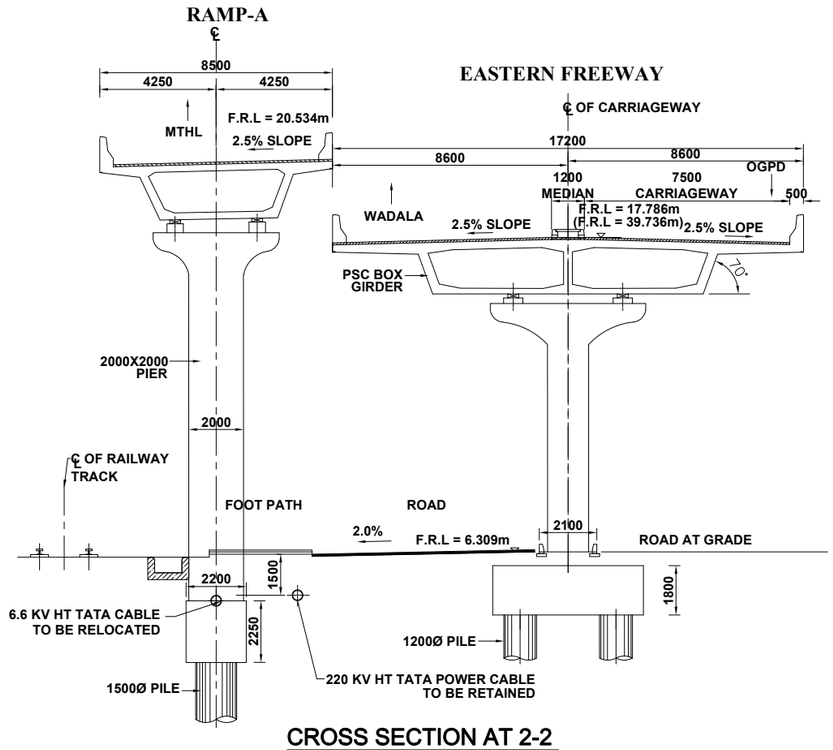

CROSS SECTION AT 2-2
(A Ramp - PIER 13)

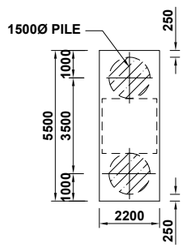

PLAN AT PILE CAP Lvl.

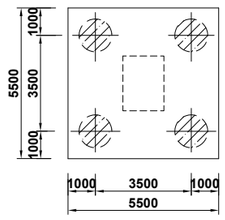

PLAN AT PILE CAP Lvl.

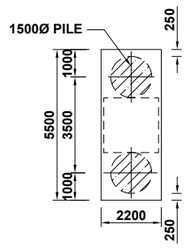

PLAN AT PILE CAP Lvl.

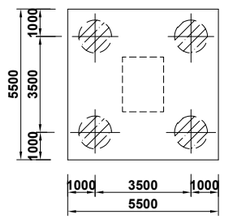

PLAN AT PILE CAP Lvl.

NOTES:-

1. ALL LEVELS ARE WITH RESPECTIVE TO CHART DATUM.(LEVELS IN BRACKET ARE WITH RESPECT TO TOWN HALL DATUM.)
2. THE STRUCTURAL DIMENSIONS SHOWN IN THIS DRG.ARE TENTATIVE & MAY VARY AS PER DESIGN.
3. THE AREA UNDER INTERCHANGE MAY CONTAIN VARIOUS UTILITIES. THESE CAN BE RELOCATED, IF FOUND FOULING WITH THE FOUNDATION IN CONSULTATION WITH RESPECTIVE AGENCIES. IN CASE IT IS NOT POSSIBLE TO SHIFT THE UTILITIES, NECESSARY MODIFICATION IN FOUNDATION SHALL BE MADE.
4. 220Kv TATA OIL FILLED CABLE SHALL NOT BE SHIFTED.
5. PL. REFER DRG. No.218058/I-328 PLAN FOR SEWRI INTERCHANGE.

Mark	Date	By	Rev.

MMRDA
MUMBAI METROPOLITAN REGION DEVELOPMENT AUTHORITY

The Preparatory Survey on the Project for Construction of Mumbai Trans Harbour Link

JICA
JAPAN INTERNATIONAL COOPERATION AGENCY

Oriental Consultants Global Co., Ltd.
East Nippon Expressway Co., Ltd.
Nippon Koei Co., Ltd.
Nippon Engineering Consultants Co., Ltd.

Drawing Title: General View of RAMP 'A' at Sewri Interchange

Drawing Status:

Drawing No.: B-073

Rev.:

General View of RAMP 'C1' at Sewri Interchange

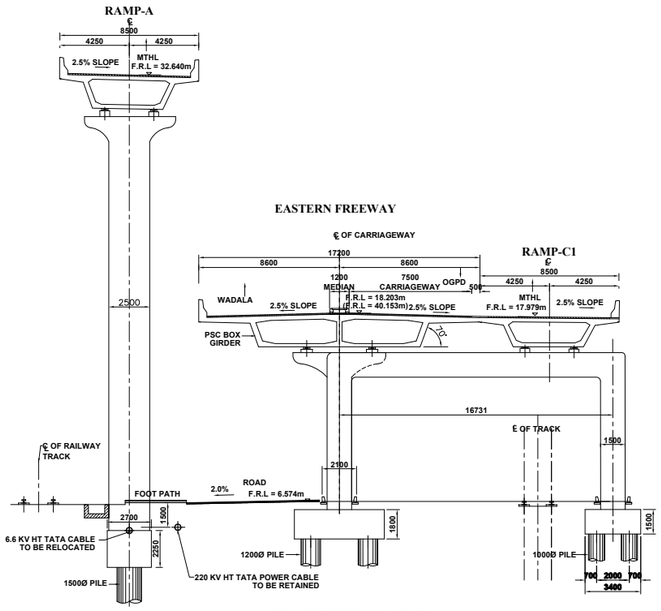

CROSS SECTION AT 3-3
(A Ramp - PIER 30)

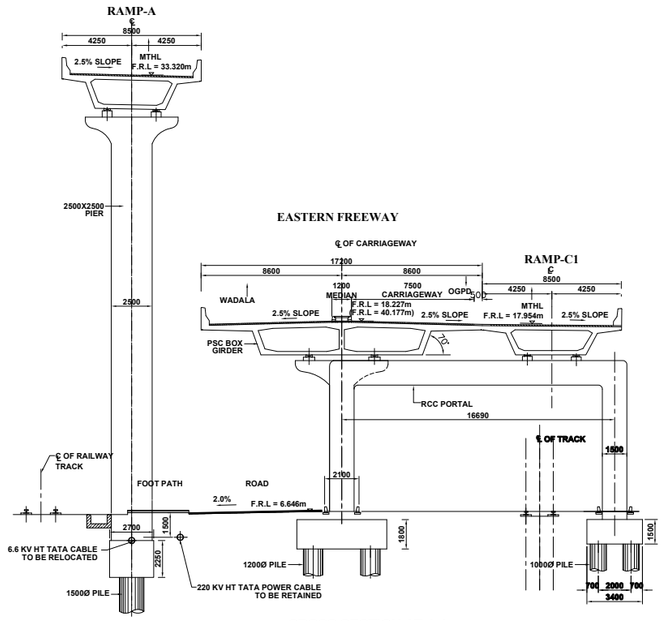

CROSS SECTION AT 4-4
(A Ramp - PIER 31)

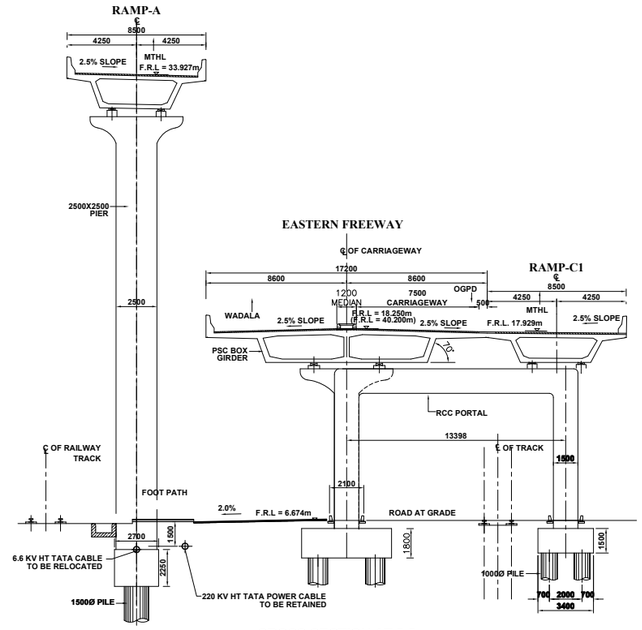

CROSS SECTION AT 5-5
(A Ramp - PIER 32)

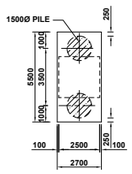

PLAN AT PILE CAP Lvl.

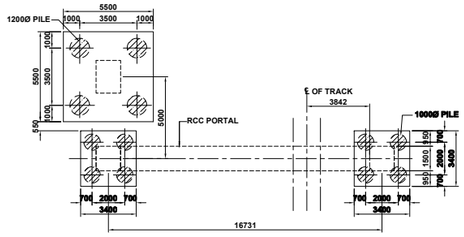

PLAN AT PILE CAP Lvl.

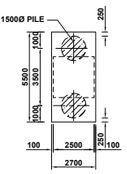

PLAN AT PILE CAP Lvl.

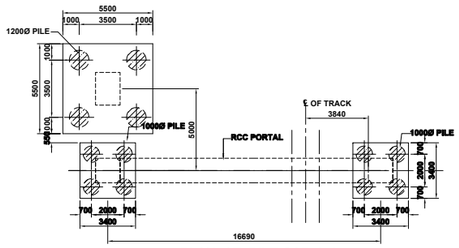

PLAN AT PILE CAP Lvl.

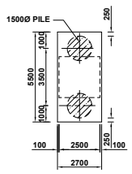

PLAN AT PILE CAP Lvl.

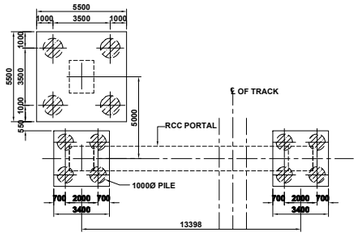

PLAN AT PILE CAP Lvl.

NOTES:-

1. ALL LEVELS ARE WITH RESPECTIVE TO CHART DATUM.(LEVELS IN BRACKET ARE WITH RESPECT TO TOWN HALL DATUM.)
2. THE STRUCTURAL DIMENSIONS SHOWN IN THIS DRG.ARE TENTATIVE & MAY VARY AS PER DESIGN.
3. THE AREA UNDER INTERCHANGE MAY CONTAIN VARIOUS UTILITIES. THESE CAN BE RELOCATED, IF FOUND FOULING WITH THE FOUNDATION IN CONSULTATION WITH RESPECTIVE AGENCIES. IN CASE IT IS NOT POSSIBLE TO SHIFT THE UTILITIES, NECESSARY MODIFICATION IN FOUNDATION SHALL BE MADE.
4. 220Kv TATA OIL FILLED CABLE SHALL NOT BE SHIFTED.
5. PL. REFER DRG. No.218058/I-328 PLAN FOR SEWRI INTERCHANGE.

Mark	Date	By	Rev.

MMRDA
MUMBAI METROPOLITAN REGION DEVELOPMENT AUTHORITY

The Preparatory Survey on the Project for Construction of Mumbai Trans Harbour Link

JICA
JAPAN INTERNATIONAL COOPERATION AGENCY

Oriental Consultants Global Co., Ltd.
East Nippon Expressway Co., Ltd.
Nippon Koei Co., Ltd.
Nippon Engineering Consultants Co., Ltd.

Drawing Title: General View of RAMP 'C1' at Sewri Interchange

Drawing Status:

Drawing No.: B-074

Rev.:

General View of RAMP 'B' at Sewri Interchange

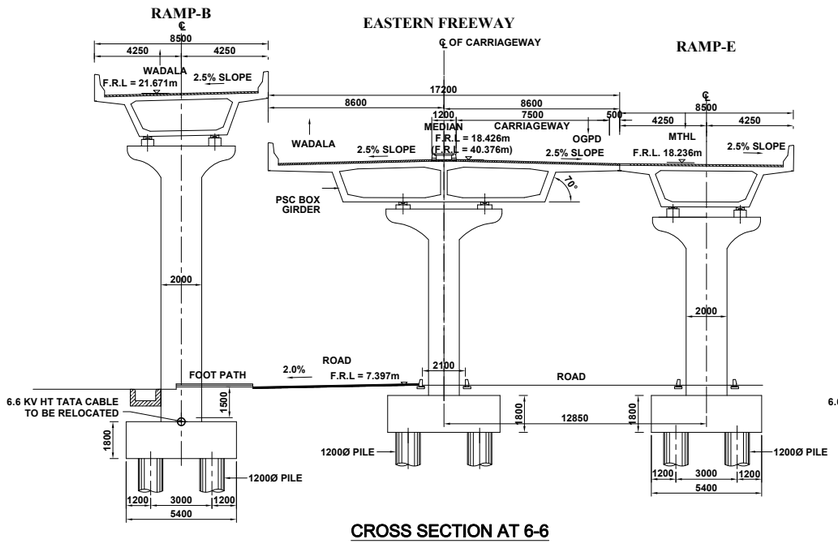

CROSS SECTION AT 6-6
(B Ramp - PIER 19)

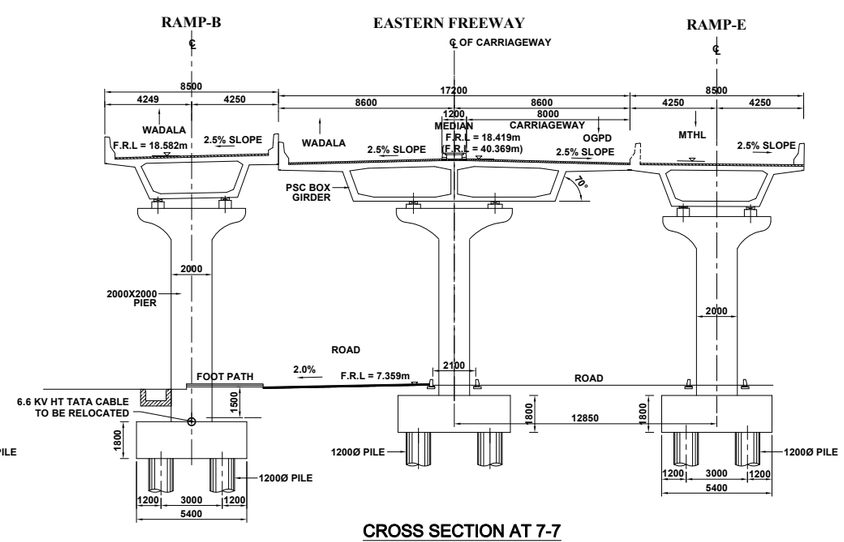

CROSS SECTION AT 7-7
(B Ramp - PIER 15)

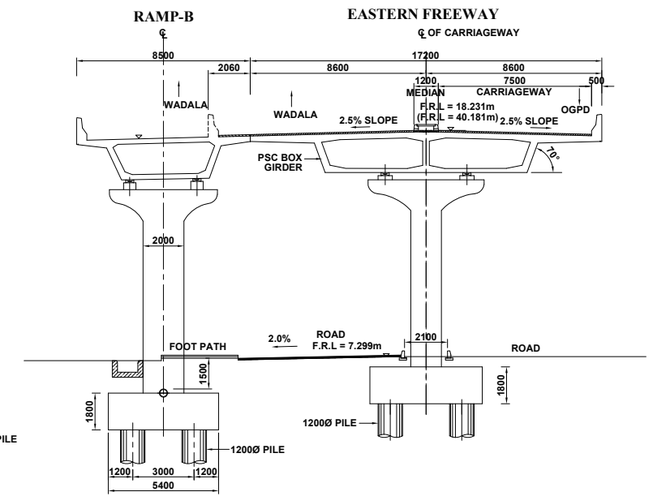

CROSS SECTION AT 8-8
(B Ramp - PIER 8)

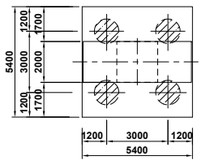

PLAN AT PILE CAP Lvl.

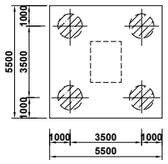

PLAN AT PILE CAP Lvl.

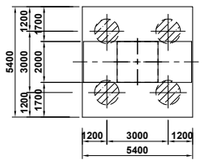

PLAN AT PILE CAP Lvl.

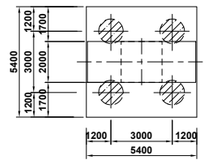

PLAN AT PILE CAP Lvl.

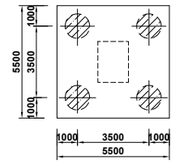

PLAN AT PILE CAP Lvl.

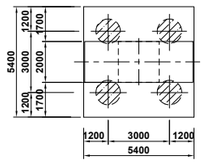

PLAN AT PILE CAP Lvl.

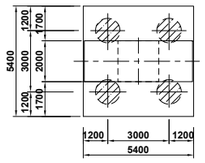

PLAN AT PILE CAP Lvl.

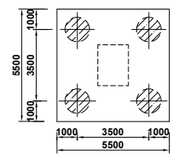

PLAN AT PILE CAP Lvl.

NOTES:-

1. ALL LEVELS ARE WITH RESPECTIVE TO CHART DATUM.(LEVELS IN BRACKET ARE WITH RESPECT TO TOWN HALL DATUM.)
2. THE STRUCTURAL DIMENSIONS SHOWN IN THIS DRG.ARE TENTATIVE & MAY VARY AS PER DESIGN.
3. THE AREA UNDER INTERCHANGE MAY CONTAIN VARIOUS UTILITIES. THESE CAN BE RELOCATED, IF FOUND FOULING WITH THE FOUNDATION IN CONSULTATION WITH RESPECTIVE AGENCIES. IN CASE IT IS NOT POSSIBLE TO SHIFT THE UTILITIES, NECESSARY MODIFICATION IN FOUNDATION SHALL BE MADE.
4. 220Kv TATA OIL FILLED CABLE SHALL NOT BE SHIFTED.
5. PL. REFER DRG. No.218058/I-328 PLAN FOR SEWRI INTERCHANGE.

Mark	Date	By	Rev.

MMRDA
MUMBAI METROPOLITAN REGION DEVELOPMENT AUTHORITY

The Preparatory Survey on the Project for Construction of Mumbai Trans Harbour Link

JICA
JAPAN INTERNATIONAL COOPERATION AGENCY

Oriental Consultants Global Co., Ltd.
East Nippon Expressway Co., Ltd.
Nippon Koei Co., Ltd.
Nippon Engineering Consultants Co., Ltd.

Drawing Title: General View of RAMP 'B' at Sewri Interchange

Drawing Status:

Drawing No.: B-075

Rev.:

General View of RAMP F,E,A,MTHL,C2,C1,&B at Sewri Interchange

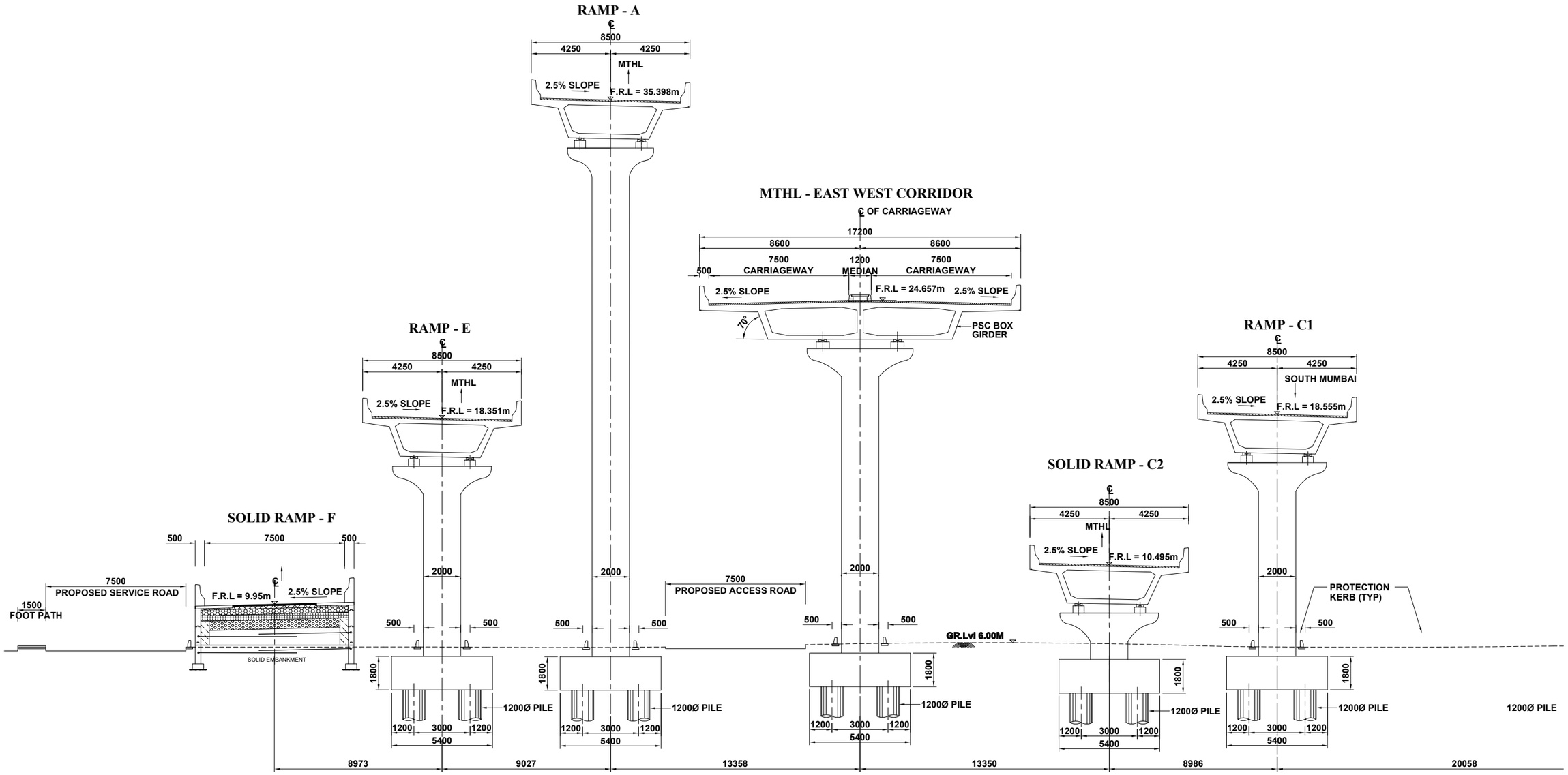

CROSS SECTION AT 9-9

SCALE 1:150

NOTES:-

1. ALL LEVELS ARE WITH RESPECTIVE TO CHART DATUM.(LEVELS IN BRACKET ARE WITH RESPECT TO TOWN HALL DATUM.)
2. THE STRUCTURAL DIMENSIONS SHOWN IN THIS DRG.ARE TENTATIVE & MAY VARY AS PER DESIGN.
3. THE AREA UNDER INTERCHANGE MAY CONTAIN VARIOUS UTILITIES. THESE CAN BE RELOCATED, IF FOUND FOULING WITH THE FOUNDATION IN CONSULTATION WITH RESPECTIVE AGENCIES. IN CASE IT IS NOT POSSIBLE TO SHIFT THE UTILITIES, NECESSARY MODIFICATION IN FOUNDATION SHALL BE MADE.
4. 220Kv TATA OIL FILLED CABLE SHALL NOT BE SHIFTED.
5. PL. REFER DRG. No.218058/I-328 PLAN FOR SEWRI INTERCHANGE.

Mark	Date	By	Rev.

MMRDA
MUMBAI METROPOLITAN REGION DEVELOPMENT AUTHORITY

The Preparatory Survey on the Project for Construction of Mumbai Trans Harbour Link

JICA
JAPAN INTERNATIONAL COOPERATION AGENCY

Oriental Consultants Global Co., Ltd.
East Nippon Expressway Co., Ltd.
Nippon Koei Co., Ltd.
Nippon Engineering Consultants Co., Ltd.

Drawing Title: General View of RAMP F,E,A,MTHL,C2,C1,&B at Sewri Interchange

Drawing Status:

Drawing No.: B-076

Rev.:

General View of RAMP 'A' and 'C1' at Sewri Interchange

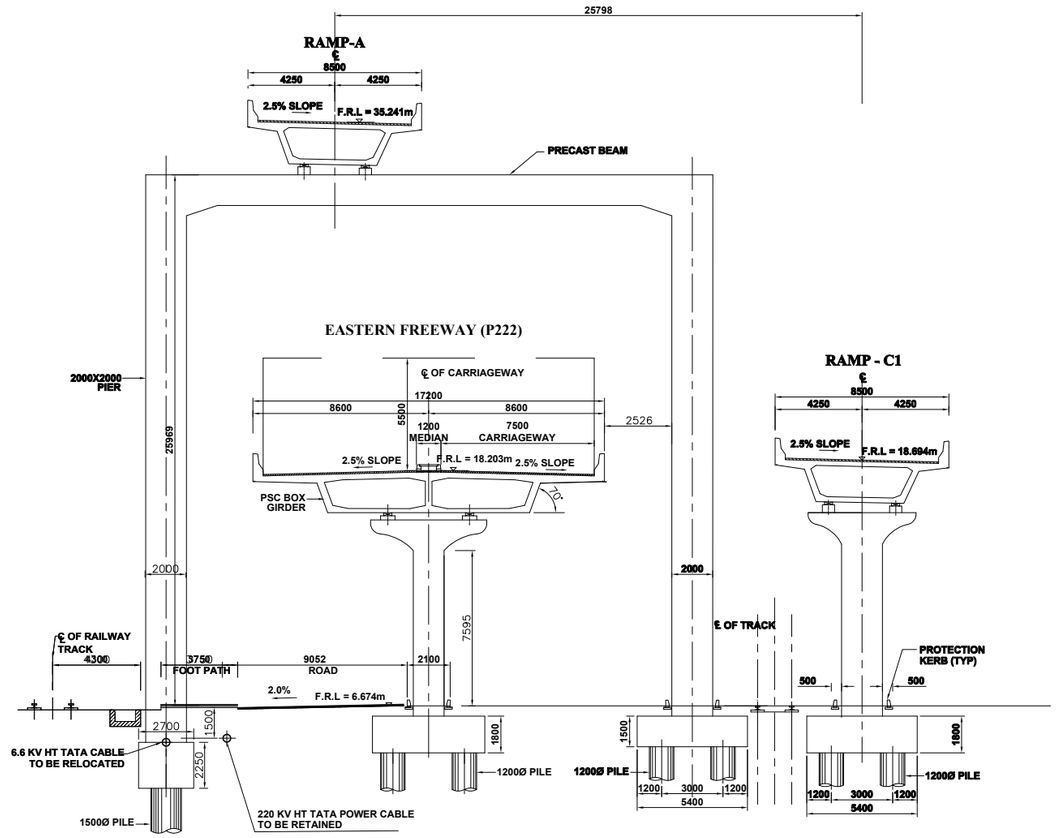

CROSS SECTION AT 10-10
(A Ramp PIER 34)

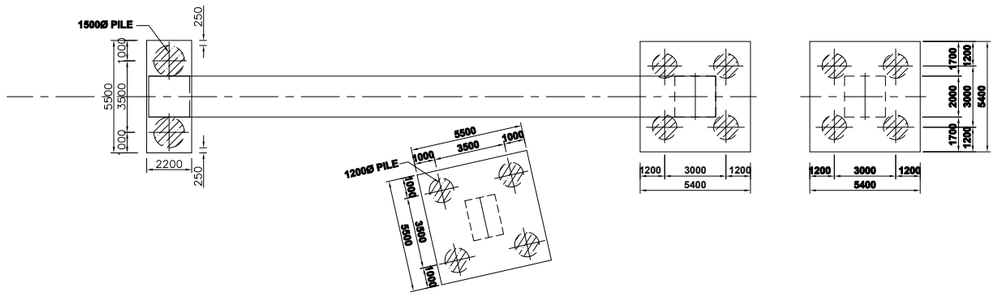

PLAN AT PILE CAP Lvl.

Mark	Date	By	Rev.

MMRDA
MUMBAI METROPOLITAN REGION DEVELOPMENT AUTHORITY

The Preparatory Survey on the Project for Construction of Mumbai Trans Harbour Link

JICA
JAPAN INTERNATIONAL COOPERATION AGENCY

Oriental Consultants Global Co., Ltd.
East Nippon Expressway Co., Ltd.
Nippon Koei Co., Ltd.
Nippon Engineering Consultants Co., Ltd.

Drawing Title: General View of RAMP 'A' and 'C1' at Sewri Interchange

Drawing Status:

Drawing No.: B-077

Rev.:

Plan of Shivaji Nagar Interchange

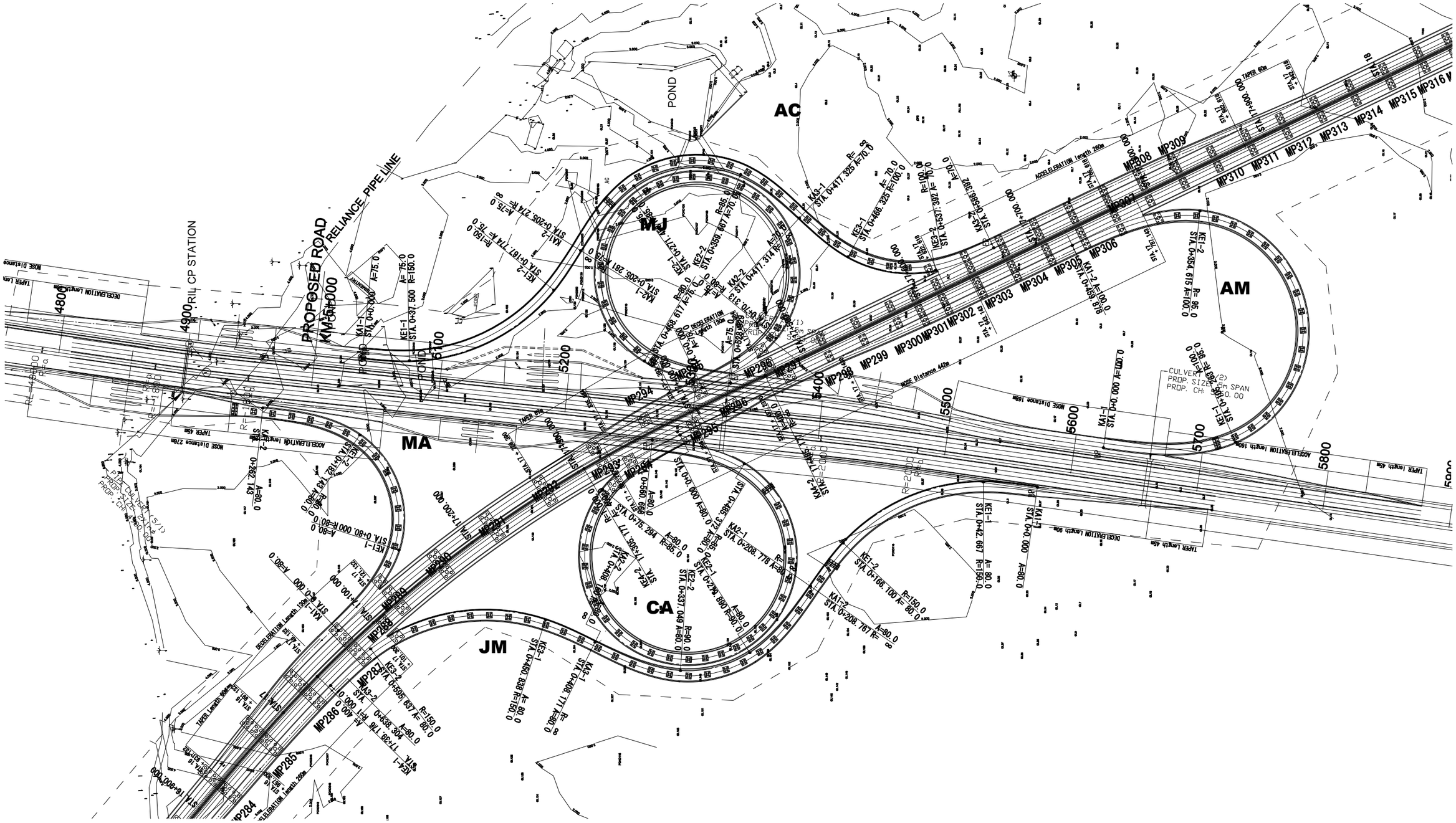

Mark	Date	By	Rev.

MMRDA
MUMBAI METROPOLITAN REGION DEVELOPMENT AUTHORITY

The Preparatory Survey on the Project for Construction of Mumbai Trans Harbour Link

JICA
JAPAN INTERNATIONAL COOPERATION AGENCY

Oriental Consultants Global Co., Ltd.
East Nippon Expressway Co., Ltd.
Nippon Koei Co., Ltd.
Nippon Engineering Consultants Co., Ltd.

Drawing Title: Plan of Shivaji Nagar Interchange

Drawing Status:

Drawing No.: B-078

Rev.:

Plan of SH54 Interchange

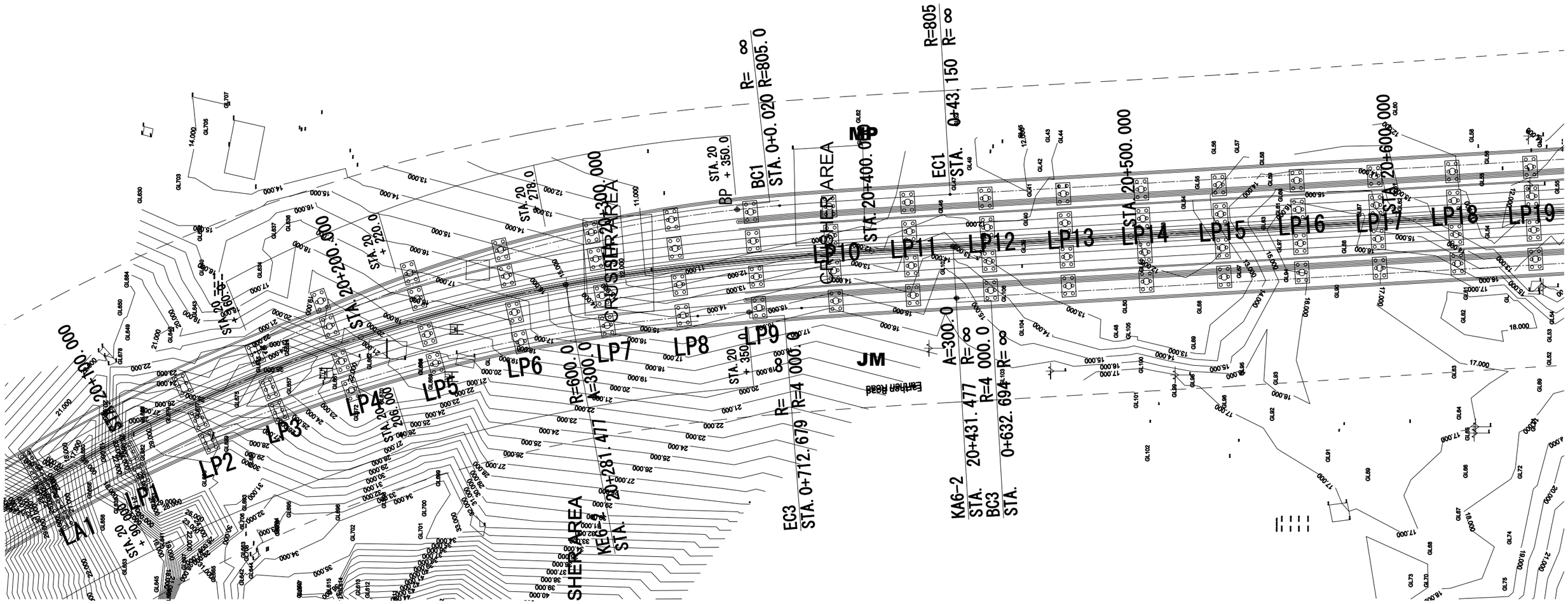
LA1
LP1
LP2
LP3
LP4
LP5
LP6
LP7
LP8
LP9
LP10
LP11
LP12
LP13
LP14
LP15
LP16
LP17
LP18
LP19
STA. 20+100.000
STA. 20+200.000
STA. 20+300.000
STA. 20+400.000
STA. 20+500.000
STA. 20+600.000
STA. 20 + 90.000
STA. 20 + 220.0
STA. 20 + 350.0
STA. 20 + 350.0
STA. 20 + 350

Plan of Chirle Interchange

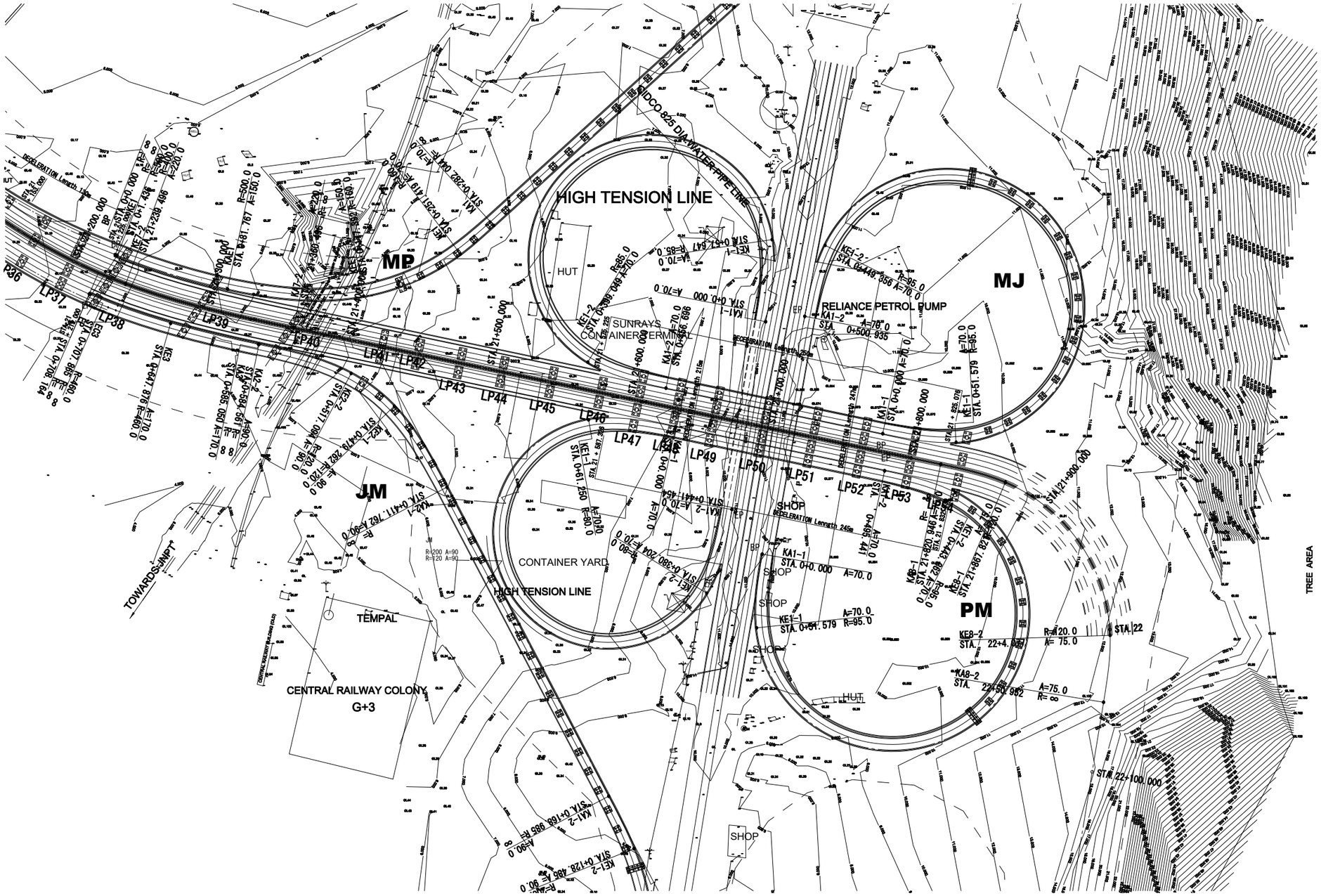

Mark	Date	By	Rev.

MMRDA
MUMBAI METROPOLITAN REGION DEVELOPMENT AUTHORITY

The Preparatory Survey on the Project for Construction of Mumbai Trans Harbour Link

JICA
JAPAN INTERNATIONAL COOPERATION AGENCY

Oriental Consultants Global Co., Ltd.
East Nippon Expressway Co., Ltd.
Nippon Koei Co., Ltd.
Nippon Engineering Consultants Co., Ltd.

Drawing Title: Plan of Chirle Interchange

Drawing Status:

Drawing No.: B-080

Rev.:

General View of Substructure at Shivaji Nagar, SH54, Chirle Interchange(1/2)

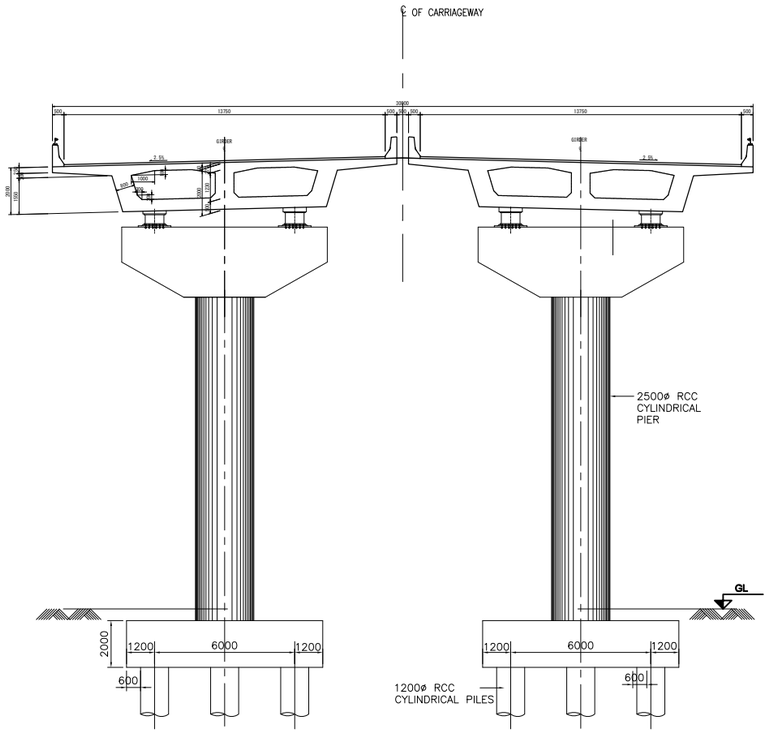

TYPICAL CROSS SECTION AT PIER IN LAND(SPAN=30M)

(SCALE 1:175)

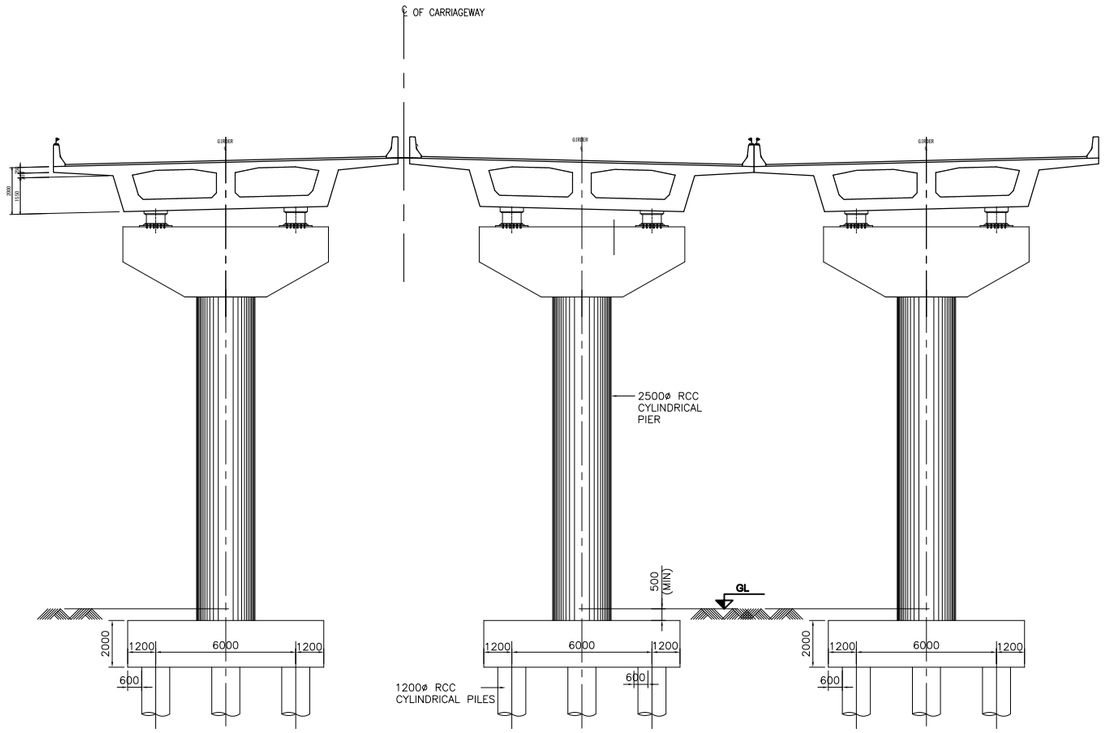

CROSS SECTION AT LP1~LP3 & LP33~LP36

(SCALE 1:175)

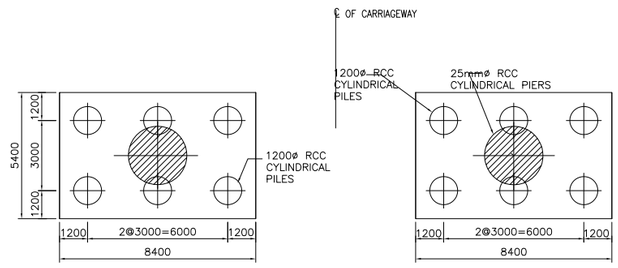

TYPICAL PLAN AT PILE CAP

(SCALE 1:175)

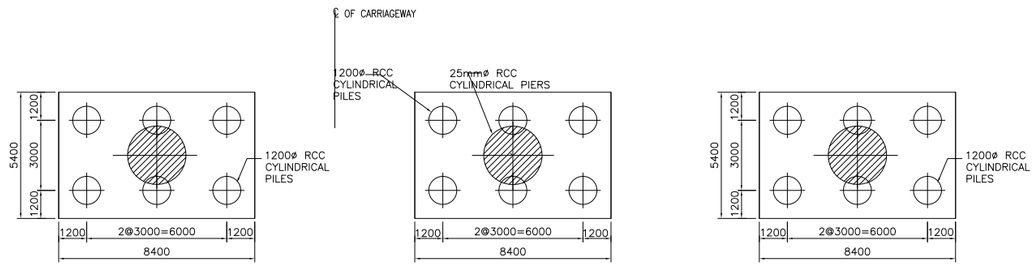

NOTES:

1. ALL DIMENSIONS ARE IN MILLIMETERS AND LEVELS ARE IN METERS UNLESS STATED OTHERWISE.
2. NO DIMENSIONS SHALL BE SCALED FROM THE DRAWING. ONLY WRITTEN DIMENSION SHALL BE FOLOWED.
2. THE STRUCTURAL DIMENSIONS SHOWN IN THIS DRAWING ARE TENTATIVE & MAY VARY AS PER DESIGN.

Mark	Date	By	Rev.

MMRDA
MUMBAI METROPOLITAN REGION DEVELOPMENT AUTHORITY

The Preparatory Survey on the Project for Construction of Mumbai Trans Harbour Link

JICA
JAPAN INTERNATIONAL COOPERATION AGENCY

Oriental Consultants Global Co., Ltd.
East Nippon Expressway Co., Ltd.
Nippon Koei Co., Ltd.
Nippon Engineering Consultants Co., Ltd.

Drawing Title: General View of Substructure at Shivaji Nagar, SH54, Chirle Interchange (1/2)

Drawing Status:

Drawing No.: B-081

Rev.:

General View of Substructure at Shivaji Nagar, SH54, Chirle Interchange(2/2)

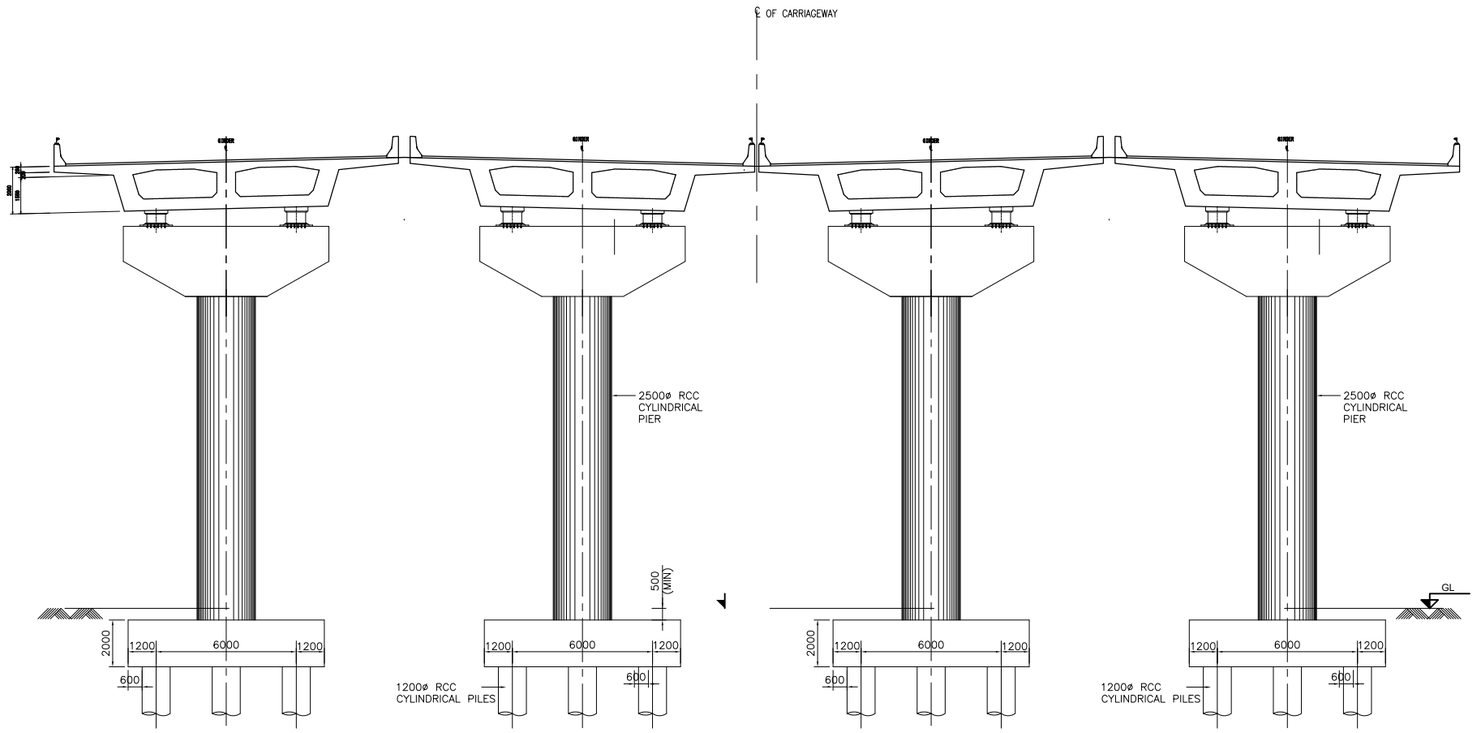

CROSS SECTION AT PIER MP303~308/LP4~9/LP47~53

(SCALE 1:175)

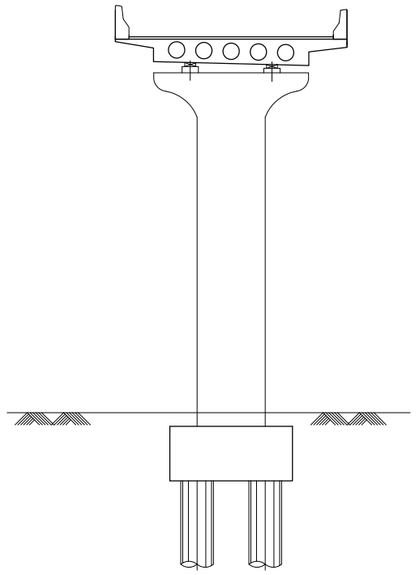

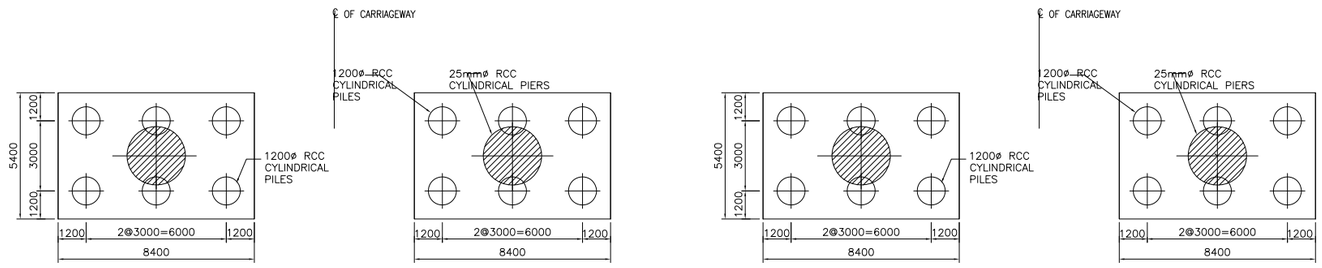

PLAN AT PILE CAP

(SCALE 1:175)

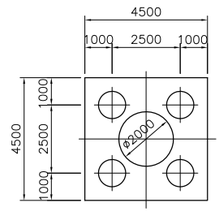

TYPICAL CROSS SECTION OF RAMP PIER AT SHIVAJI NAGAR/CHIRLE

(MA,JM,CA,MJ,AC,AM/MP,JM,MJ,PM)

NOTES:

1. ALL DIMENSIONS ARE IN MILLIMETERS AND LEVELS ARE IN METERS UNLESS STATED OTHERWISE.
2. NO DIMENSIONS SHALL BE SCALED FROM THE DRAWING. ONLY WRITTEN DIMENSION SHALL BE FOLOWED.
2. THE STRUCTURAL DIMENSIONS SHOWN IN THIS DRAWING ARE TENTATIVE & MAY VARY AS PER DESIGN.

Mark	Date	By	Rev.

MMRDA
MUMBAI METROPOLITAN REGION DEVELOPMENT AUTHORITY

The Preparatory Survey on the Project for Construction of Mumbai Trans Harbour Link

JICA
JAPAN INTERNATIONAL COOPERATION AGENCY

Oriental Consultants Global Co., Ltd.
East Nippon Expressway Co., Ltd.
Nippon Koei Co., Ltd.
Nippon Engineering Consultants Co., Ltd.

Drawing Title: General View of Substructure at Shivaji Nagar, SH54, Chirle Interchange (2/2)

Drawing Status:

Drawing No.: B-082

Rev.:

Deep Pile Dolphin (Ship Collision Protection)

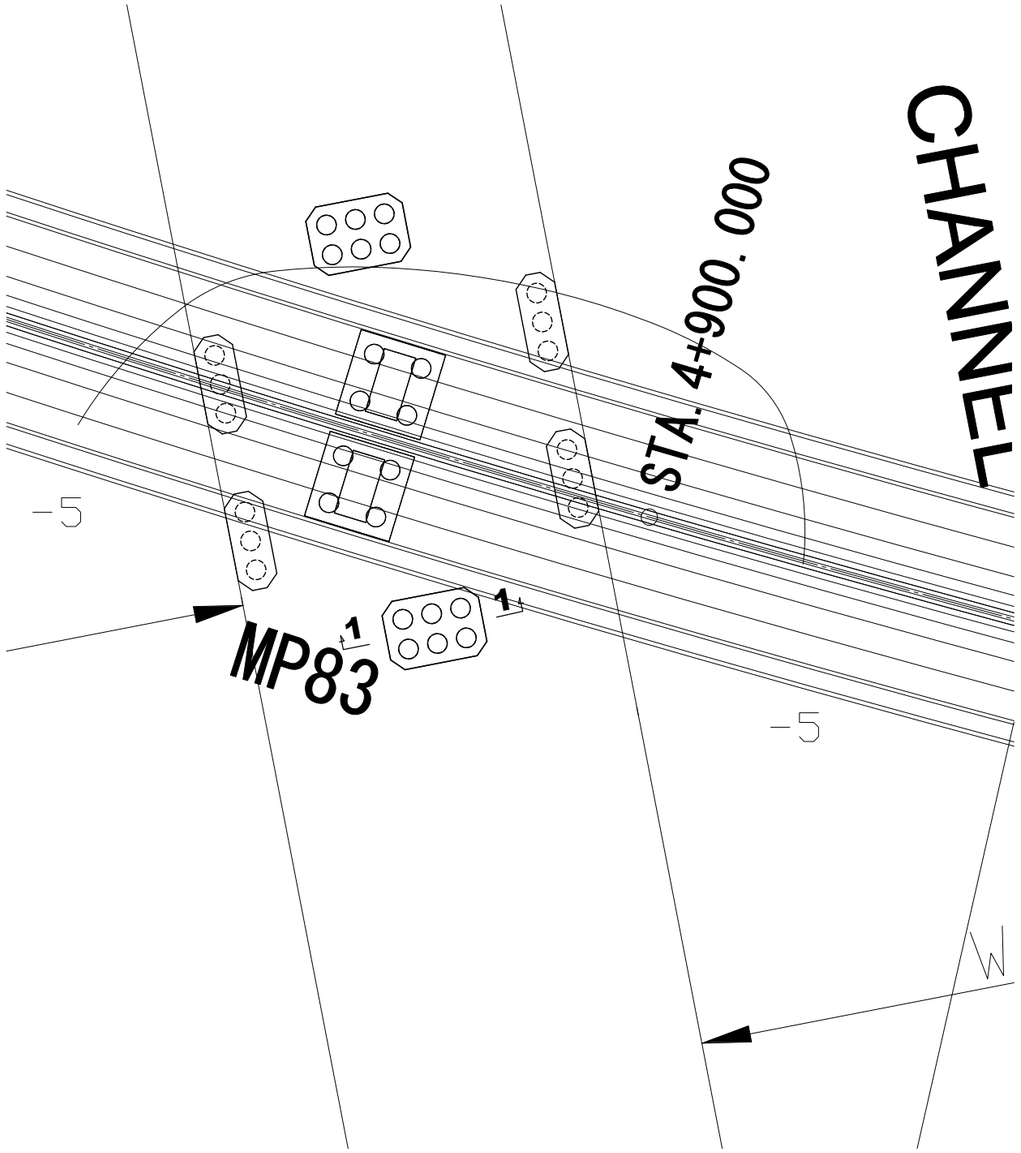

1 - 1

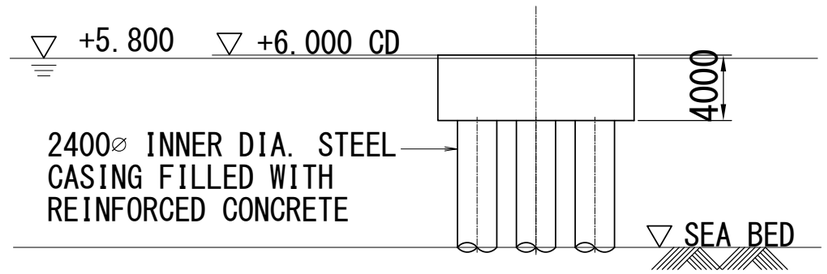

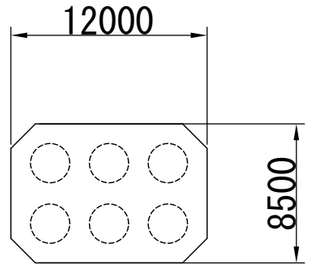

Mark	Date	By	Rev.

MMRDA
MUMBAI METROPOLITAN REGION DEVELOPMENT AUTHORITY

The Preparatory Survey on the Project for Construction of Mumbai Trans Harbour Link

JICA
JAPAN INTERNATIONAL COOPERATION AGENCY

Oriental Consultants Global Co., Ltd.
East Nippon Expressway Co., Ltd.
Nippon Koei Co., Ltd.
Nippon Engineering Consultants Co., Ltd.

Drawing Title: Deep Pile Dolphin (Ship Collision Protection)

Drawing Status:

Drawing No.: B-083

Rev.: