タ イ 国

東北タイ農業開発研究計画フェーズII

パイロットインフラ整備事業

施工監理業務

報 告 書

JICA LIBRARY
1223587[5]

平成4年3月

国 際 協 力 事 業 団

タ イ 国

東北タイ農業開発研究計画フェーズII

パイロットインフラ整備事業

施工監理業務

報 告 書

平成４年３月

国 際 協 力 事 業 団


1223587 [5]

はじめに

「東北タイ農業開発研究プロジェクト・フェーズⅡ」は1988年12月より５カ年の計画で実施されているが、この協力課題である営農体系の実証・展示を行ない広く成果の普及を計るための拠点として、展示圃場造成・整備が必要となった。

この要請にもとづき1989年11月より1990年 1月にかけて、４名の専門家からなる「実施設計調査団」が編成され現地に派遣された。同調査団は45日間の現地調査を実施し、帰国後その調査結果をもとに実施設計を行ない、その成果は「東北タイ農業開発研究計画フェーズⅡ、パイロットインフラ整備事業実施設計調査報告書、平成 2年 3月」にとりまとめられている。

その後、展示圃場造成・整備を実施するための諸手続きが、わが国とタイ国との間で進められ、このたび施行開始の運びとなった。それによって平成 3年 7月20日より平成 4年 3月15日までの間、工事の発注・施工監理を行なう専門家が派遣されることとなった。

本報告書は、工事の発注から契約、着工、中間検査、竣功検査にいたる工事施行の全工程についての施工監理業務の状況をとりまとめたものである。

平成４年３月

目　次

頁

第１章　概要 …… 1
　１－１　業務実施場所 …… 1
　１－２　派遣専門家名及び派遣期間 …… 1
　１－３　準拠した設計書，図面 …… 1
　１－４　工事規模の概要 …… 1
　１－５　工事契約及び実施状況の概要 …… 2

第２章　当パイロットインフラ整備事業の …… 3
　　工事実施にいたるまでの関係文書

第３章　工事請負契約にいたるまでの経過 …… 4
　３－１　「実施設計報告書（平成２年３月）」 …… 4
　　に対して変更修正された部分
　３－２　土木及び建築工事の発注について …… 4
　３－３　インスペクション・コミティーについて …… 6
　３－４　その他の契約等 …… 6

第４章　施工監理 …… １１
　４－１　Inspection Committee …… １１
　４－２　施工監理 …… １１
　４－３　工事出来高 …… １４
　４－４　事業費 …… １５
　４－５　施設使用における注意事項 …… １８

添付資料

第1章　概　要

第１章　概　　要

本報告書は国際協力事業団（JICA）の委託により、日本技研株式会社が行なう「東北タイ農業開発研究計画フェーズⅡパイロットインフラ整備事業施工監理業務」の全実施状況をとりまとめたものである。

１－１　業務実施場所

１）　工事発注にいたるまでの諸業務は、東北タイ農業開発研究センター内の一室を提供され、そこで行なった。

２）　工事開始後竣功にいたるまでの施工監理業務は、現場カオ・スワン・カンにおいて行ない、内業は上記センター内でおこなった。

１－２　派遣専門家名および派遣期間

石山茂樽　　平成 3年 7月20日～平成 3年 9月17日

後藤義徳　　平成 3年 9月18日～平成 4年 3月15日

ただし後藤は補佐として石山と同行し、その経費は日本技研株式会社が支出した。

上記２名の業務実績は資料1-1参照。

１－３　準拠した設計書、図面

「東北タイ農業開発研究計画フェーズⅡパイロットインフラ整備事業実施設計調査報告書、平成 2年 3月」に掲載された設計書および図面集による。ただし現状をふまえて部分的に修正した。（次項および第３章参照）

１－４　工事規模の概要

実施段階で修正された個所を明確にするために対比表を以てしめす。

	当初の実施設計	工事発注時点での実施設計	摘　要
(1) 溜池造成工			
掘削土量	19,000m³	6,013.4m³	規模縮小
堤体盛土	1,726m³	--	不要となり削除
余水吐	1 式	—	同　上
(2) 排水路工			
総延長	1,500m	1,481m	用地境界変更による
落差工	132ヵ所	119ヵ所	同　上
法面保護	3、000m²	2,562m²	同　上
(3) 道路工			
幹線道路	434m	434m	
支線道路	1、693m	895m	予定路線の一部が地区外になる
(4) 圃場均平工	6ha	6ha	
(5) 畑地潅漑施設			
揚水管路	530m	510m	ポンプ位置変更による
配・給水管路	960m	938m	用地境界変更による
給水管路	—	100m	取水方式の変更による
ポンプ施設	1 式	1 式	ポンプ容量変わらず
(6) 土壌侵蝕計測試験枠	18基	18基	形状変更

(7) 建築工事			
建物	3棟	3棟	
乾燥場	1式	1式	
敷地整備	—	1式	溜池掘削土の流用が出来なくなったため
(8) 圃場内送電線工事	1式(640m)	1式(800m)	送電経路の変更

1－5　工事契約および実施状況の概要

1）　土木および建築工事

請負業者名	Suvalee Co.,Ltd.
契約年月日	平成 3年 9月10日
契約金額	7,400,000ﾊﾞｰﾂ
工　期	平成 4年 2月28日まで

2）　圃場内送電線工事

請負業者名	Khon-Kaen Witsawaphan
契約年月日	平成　3年11月8日
契約金額	280,056ﾊﾞｰﾂ

3）　土壌侵食測定試験枠工事

請負業者名	Suvalee Co. Ltd.
契約年月日	平成　3年12月26日
契約金額	800,000ﾊﾞｰﾂ
工　期	平成　4年　2月28日まで

4）　雑　工　事

請負業者名	Suvalee Co. Ltd.
契約年月日	平成　4年　2月28日
契約金額	600,000ﾊﾞｰﾂ
工　期	平成　4年　3月5日まで

5）　そ　の　他（資材供与）

付帯資材	ｶｵｿﾝｸﾜﾝ用ﾄﾗｸﾀｰｱﾀｯﾁﾒﾝﾄ，苗畑用資材等
金　額	480,000ﾊﾞｰﾂ

6）　工　事　諸　費

示達額275,000ﾊﾞｰﾂにたいし274,550ﾊﾞｰﾂで精算

7）　合　計　額

9,834,606　ﾊﾞｰﾂ

50,304,010　円

（換算レート　1ﾊﾞｰﾂ＝5.115円）

第２章　　当パイロットインフラ整備事業の工事実施にいたるまでの関係文書

第２章　当パイロットインフラ整備事業の工事実施にいたるまでの関係文書

① 1990年（平成2年）8月17日付けにて、タイ国技術協力局より当プロジェクトの実施に伴う工事施工監理短期専門家２名の派遣について A-1 フォームを添えて要請があった（資料 2-1）。

② 1991年（平成 3年）1月10日付け補足R/Dにより、展示圃場の建設について、JICAを通じて必要予算措置をとることが確認された。（資料 2-2）

③ 1991年（平成 3年）2月 4日付けにて、プロジェクトリーダーよりタイ事務所長を通じて建設予算示達の申請がなされた。（資料 2-3）

④ 1991年（平成 3年）2月21～25日、タイ国技術経済協力局と日本大使館とのあいだで口上書の交換がなされた。（資料 2-4）

⑤ 1991年（平成 3年）6月12日付けにてJICA本部よりタイ事務所あて予算51,936千円の示達がなされた。（資料 2-5）

第３章　　工事請負契約にいたるまでの経過

第３章　工事請負契約にいたるまでの経過

３－１　「実施設計報告書（平成 2年 3月）」に対して変更修正された部分

１）　用地境界の変更

タイ側の関係省庁間の話し合いにより用地境界が変更された。この状況は施工出来高平面図と当初計画平面図との対比により示される。これによる影響は建物敷地の移動とそれに伴なう高圧電力引き込み地点の変更、地区内送電線路の延長などにあらわれている。（添付図面 1,1-1）

２）　溜池造成工の大幅変更

計画堰堤位置より約 170m 下流にタイ国王立潅漑局（R.I.D.）により小規模堰堤が築造されたため、当プロジェクトの堰堤築造が不要となった。それにより池敷の掘削土量が減りその流用計画に大幅な変更が生じた。また築造された堰堤の満水面が、一部圃場および、畑地潅漑面積の減少をもたらし、配管路長、取水口などの数量に変更が生じた。

３）　土壌侵蝕計測試験枠について

造成基数に変更はないが、新たな専門家の意見およびタイ側の要望も容れて、当初の設計にたいし大幅に構造が変更になった。

４）　工事費について

上記の変更にともなう工事費の増減および、積算時点より一年半以上を経過しており、その間湾岸戦争などがあり、その影響による石油価格の高騰にともなう工事用諸資材の値上がりがあるため、単価表より内訳明細表にいたるまで、全面的に工事費の見直しをした。なおバーツ対円の交換レートは１Ｂ＝5.5 円とした。

３－２　土木および建築工事の発注について

１）　業者の選定

はじめに日本タイ合弁建設会社数社にたいし、当該工事に対する関心度を調査したが、それらは当面手持ち工事量で手一杯との理由で、全く関心を示さなかった。そこでタイ国内業者を対象とすることとし、当プロジェクトのタイ側代表機関である農業開発研究センターを通じて建設業者の推薦を依頼したところ、数社がリストアップされたので、その各社に対し事前資格審査表（書式は資料 3-3参照）を渡し提出をもとめ、また聞き取りを行なった。その結果関心を示した下記４社について指名通知書および入札案内を手交した。（資料 3-1）

Suvalee Co.,Ltd.
Khon-Kaen Witsawaphon
Khon-Kaen P.Panich
Khon-Kaen Kitcharoen Kosarng

２）　予定価格について

土壌侵蝕測定試験枠の設計がこの時点までにまとまらなかったので、これを除いた部分について発注を進めることとし、その内訳明細書を作成した。（資料 3-2）　その結果タイ事務所長により 7,584,000 ﾊﾞｰﾂの予定価格が定められた。[P.5] 参照。

3） 現場説明について

現場説明は平成 3年 8月22日午後１時より前出の開発研究センターでおこない、出席者にたいして関係図書（プロポーザル書式、契約書案、仕様書、図面、数量明細書、工程表）を手交し、内容説明を行なった。現場説明出席者は[P.6]の通りであり、これら各社より提出された事前資格審査表（資料 3-3,3-4参照）および聞き取りをもとにとりまとめた各社の内容は[P.7]の如くである。

4） プロポーザルの開封および契約について。

平成 3年 9月 5日午前10時までにプロポーザルを提出した業者は２社であり（資料 3-5,3-6参照）、その評価一覧表を[P.8]にしめす。これらの資料をもとにして、JICAタイ事務所において検討した結果、下記の業者と契約を進めることにした。

契約社名　Suvalee Co.,Ltd.
代表者名　Mr. Sutin Prasertchaiwanit
契約金額　7,400,000 バーツ
契約月日　1991年 9月10日
工　期　1992年 2月28日まで

契約書、仕様書は（資料 3-7）の如くであり、本契約に対し請負者が差し入れた銀行保証書および工事用資機材に対する担保同意書は（資料 3-8,3-9）の如くである。

契約書について、「実施設計報告書、平成２年３月」に掲載の契約書案を一部更改した。更改点およびその理由は次の通りである。

「報告書」の契約案による工事金の支払い方法は３回で

a．	前払い	工事開始の準備が出来、その事実を施工監理委員会が認めた時点で	契約額の ３０％
b．	中間払い	施工監理委員会がそれ相応の出来高を認めたうえで	契約額の ４０％
c．	竣功払い	竣功検査に合格したのちに	契約額の ３０％

これを次の如く改めた。

a．	前払い	工事開始の準備ができ、その事実を施工監理委員会が認めた時点で	契約額の １０％
b．	中間払い(1)	施工監理委員会が４０％の出来高があることを確認した時点で	契約額の ３０％
c．	中間払い(2)	施工監理委員会が７０％の出来高があることを確認した時点で	契約額の ３０％
d．	竣功払い	竣功検査に合格したのちに	契約額の ３０％

更改の理由

① 工事請負者に対する信用の度合いを考慮する。
② 前払い金受領に必要な銀行保証取得のために必要な、請負業者の負担する手数料の軽減をはかる。
③ 中間払い２回とすることで前払いの不足を補う。
④ 確実な出来高に対応した支払いということを明確にする。

なお土壌侵蝕計測試験枠の工事は別契約として、同業者に追加契約が行なわれた。（後述）

またプロポーザル評価の結果、契約に至らなかった Khon-Kaen Vitsawaphan 社に対しては、JICA タイ事務所長名を以てその旨通知した。（資料3-10）

3－3　インスペクション・コミティー（施工監理委員会）について

工事開始とともに下記の人々をコミティーのメンバーとすることとしJICAタイ事務所長名にてそれぞれに任命書が送られた。（資料3-11）

日本側	後藤虎男　氏	プロジェクト・リーダー
	大谷和彦　氏	プロジェクト調整員
	後藤義徳　氏	施工監理短期専門家
タイ側	Mr. Wisuthi Amaritsut	A.D.R.C.所　長
	Mr. Kasem Chompoonutprapa	A.D.R.C.副所長

3－4　その他の契約等

1）　土壌侵蝕計測試験枠工事について

土壌侵蝕計測試験枠工は主工事（前述）の契約後に設計積算がなされた（資料 3-12）。これにより 800,000ﾊﾞｰﾂ の契約を締結した（資料 3-13）。

2）　構内送電線工事について

圃場内に必要な電力の供給のための工事については、高圧本線より引き込み降圧するまではタイ側が経費を負担し、それ以後必要ヵ所に送電するための工事費は当該工事予算より支出することになっている。

これについてタイ側を通して依頼したタイ電力公社の見積り額は総額520,684ﾊﾞｰﾂである。（資料 3-14） このうち圃場内送電工事分は送電距離を640mとして 282,000ﾊﾞｰﾂ と推定される。低圧部分の工事については民間業者でも施工が出来ることになっており、且つ割安であるとの情報を得たので、民間業者より見積りを徴した。（資料 3-15） この見積りでは用地境界の変更に伴う建物敷地の位置変更などのため、送電距離が800mとなっているが、公社見積りに比べ割安なので、これに発注することとした。（資料 3-18）

施工社名	Khon-Kaen Witsawaphan
代表者名	Mr.Chaivat Wattanakul
契約額	280,056 ﾊﾞｰﾂ
工　期	1992年 1月31日まで

3）　雑　工　事

金額600,000ﾊﾞｰﾂの雑工事が発注された（資料3-17）。

4）　そ　の　他（タイ側の要望に基づく供与資材等）

付帯資材としてカオソンクワン用トラクターアタッチメント、苗畑用資材等（金額４８０，０００バーツ）が供与された（資料３－１６）。

予定価格調書

金　7,584,000 バーツ

件　　名

東北タイ農業開発研究計画 フェーズII
パイロットインフラ整備事業

上記のとおり決定する。

平成3年9月3日

国際協力事業団
タイ事務所
契約担当役
所長 阿部信司

LIST OF THE BIDDERS ATTENDED THE PRE-BIDDING CONFERENCE

AUGUST 22nd, 1991

Please write in Roman letters.

NAME OF COMPANY	NAME OF PRESIDENT	NAME OF ATTENDANT	SIGNATURE	REMARK
Suvalee. Co, Ltd.	Mr. Sutin Prasertchai-wanit	Mr. Tarom krieng tawee-kit.		
Khon-Kaen Wilaiwaphan	Mr. chaivat wattanakull	Mr. chaivat wattanakull.		
Khon-Kaen P. Panich	Mrs. Suwannee Auemsasithorn	Mrs. Suwannee Auemsasithorn		
หจก. ขอนแก่นกิจเจริญกรรม จำกัด Khon-Kaen Kitcharoen-kosarng Co., Ltd.	นายอดิศักดิ์ เรืองวรรณศักดิ์ Mr. Adisak Reungwanrasak	นายอดิศักดิ์ เรืองวรรณศักดิ์ Mr. Adisak Reungwanrasak		

現説参加業者の会社内容（提出された P.Q.および聞き取りによる）

会　社　名	所在地	資　本　金	常雇技術者数	建設機械保有状況	施　工　実　績
Suvalee Co.,Ltd.	Chonburi	฿ 70,000,000	土木 5、機械 1 技能者 25	ブルドーザ 8、バックホー 4 グレーダー 5、タイヤローラ 5 ダンプトラック(10ton)12	最近5年間の平均施工高 95,000千฿/年
Khon-Kaen Witsawaphon	Khon Kaen	฿ 3,000,000	土木 2	バックホー 2、グレーダー 1	最近5年間での1件あたり 最高契約額 3,500千฿ その他1,000千฿以下が 多い.
Khon-Kaen P.Panich	Khon Kaen				A.D.R.C.構内水槽 工事 2,300千฿の施工 実績あり.
Khon-Kaen Kitcharoen Kosarng	Khon Kaen	社長資産 10,000千฿	土木 1,建築 1	保有なし.レンタルで対応	土木工事1件当たり契約高 600千฿程度 建築工事2,300千฿ (1990年)の実績あり.

［註］ Khon-Kaen P.Panich 社は、P.Q.の提出がないので会社内容は不明.

プロポーザル評価一覧表

平成 3年 9月 5日

会社名	入札金額	予定価格	予定価格との差額	総合評価	判定	摘要
Suvalee Co.,Ltd.	B 7,400,000	B 7,584,000	B 184,000	見積りの額が、合計額および個々の項目についても妥当とおもわれる	契約可	現説後積極的に現場案内を要求し、多くの質問をしている。英語の通じる技術者がいる。コンケン近傍での仕事の経験がある。
Khon-Kaen Witsawaphan	B 6,489,812	B 7,584,000	B 1,094,188	見積りの額が安すぎる。予定価格より100万バーツ以上も下回っている。入札心得のIB-10,IB-11の条項を適用して排除すべきである。	契約不可	現場案内の申し出がなく、質問もほとんどない。英語はきわめて通じにくい。1件あたり700万バーツをこえる仕事をした経験がない。

［註］　現説に参加した他の2社からは、プロポーザルの提出なし。

第４章　　施工監理業務

第４章　施工監理業務

４－１　Inspection Committee

工事請負契約書に基づき、下記の者がInspection Committeeのメンバーとして
ＪＩＣＡタイ事務所長より任を受けた。

１．	Dr. Torao Goto	Project Leader Agricultural Development Research Project
２．	Mr. Wisuthi Amaritsut	Director Agricultural Development Research Center in Northeast Thailand
３．	Mr. Kazuhiko Otani	Project Coordinator Agricultural Development Research Project
４．	Mr. Kasem Chompoonutprapa	Deputy Director Agricultural Development Research Center in Northeast Thailand
５．	Mr. Yoshinori Goto	Supervisor JICA Expert

４－２　施工監理

（１）　工程管理

工程管理は、本モデルインフラ整備事業実施設計書（平成２年３月）を基本とし、契約書類に基づき、施工業者から提出された工事実施工程表にそって行われた。

工事は１月までは順調であったが、土壌侵蝕計測枠の工事に入ると少し工事が遅れ気味になり、遅れを取り戻すため土工，大工等の作業員を増やし、無事工期内に工事を完了することができた。工事が遅れ気味であった理由として、

（イ）　施工業者の工程管理に関する認識が日系業者に比し低かったので、基本的なことから直接指導しながら工事を促進することになった。

（ロ）　材料等の現場搬入が工程に対して遅れがちであった。その理由として、バンコクでしか調達できない材料があり、調達が遅れた。

（ハ）　古い建設機械を使用したため、出力が低く、なおかつ故障が多く修理に時間を費やし工程が遅れた。

（２）　品質管理

品質管理は一度打合せを行い、施工業者が設計内容並びに設計図面を十分理解

させ、材料等の見本、カタログを提出させ、承諾をもって工事を進めた。

（3） 出来形管理

工事施工中に随時検査を行い、ミスが起きないよう徹底させた。

（4） 建物敷地造成工

① 土工事は切土，盛土に区分され、建物が建つ位置には良質土を運搬し、まき出し厚に注意して入念に盛土の締め固めを行った。

② 施工手順

表土はぎ取り→表土運搬→掘削→積込み→運搬→敷均し→締め固め

③ 主な使用機械

・ブルドーザ	(11ｔ)	1台	掘削
・バックホウ	(0.7 m^3)	1台	掘削，積込み
・ダンプトラック	(8ｔ)	2台	運搬
・タイヤローラー	(15ｔ)	1台	締め固め
・ファームテクター	(6ｔ)	1台	表土はぎ取り
・モーターグレーダ	(12ｔ)	1台	まき出し，整地

（5） 道路工

① 道路の構成は路床（60～70cm）の上に表層（ラテライト10cm）を敷均した簡易な農道である。

② 施工手順

盛土は表土をはぎ取り、道路の法尻より10ｍ位離して両側に仮置し、バックホウで両側の土砂を掘削，盛土し、その後仮置した表土を埋め戻すという方法をとった。

表土はぎ取り→表土仮置→掘削，盛土→敷均し→締め固め

③ 品質管理

簡易な農道であるため、締め固め試験はプルーフローリング（タイヤローラー15ｔ）で行った。時期が乾期であるため特に問題はなかった。

④ 主な使用機械

・ブルドーザ	(11ｔ)	1台	敷均し
・バックホウ	(0.7 m^3)	1台	掘削
・タイヤローラー	(15ｔ)	1台	締め固め
・ファームテクター	(6ｔ)	1台	表土はぎ取り
・モーターグレーダ	(12ｔ)	1台	まき出し

（6） 排水路工

① 排水路は素堀りとし、フトン篭による落差工を設け雨水の流速を減じ、法面にはエロージョンに強い“バヒア”を植え付けた。フトン篭の割栗石には良質な花

岡岩を用いた。

② 施工手順

表土はぎ取り→掘削→フトン篭設置→底面，法面締め固め→法面保護工

③ 主な使用機械

・バックホウ	(0.7 m³)	1台	掘削，締め固め
・ファームテクター	(6t)	1台	表土はぎ取り
・ランマー	(80kg)	1台	締め固め

(7) 畑地潅漑施設工

① ダムの水を高低差10mある水槽までポンプで汲上げ自然流下による潅漑方式であり、吸水部，揚水部，配水部とに分けられる。

② 圃場内のパイプラインであるため、農業機械によるパイプライン（特にPVC）の破損事故を考慮して、表土より約1.0 m位の位置に設置し、土砂埋め戻し後設置ラインがわかるよう、コンクリートの柱を建てた。

③ 品質管理

通水試験を行い、水漏れがあるかないかを確認した後、埋め戻しを行った。

④ 主な使用機械

・バックホウ	(11t)	1台	掘削，埋め戻し
・ランマー	(80t)	1台	締め固め

(8) 圃場均平工

施工前において、圃場内の草は1m位の高さにあり、測量に支障をきたすため、圃場内全体をファームテクターにより草と表土を刈り起こした。圃場内の凹凸をファームテクターにより均平した。

(9) 溜池造成工

畑地潅漑施設工の吸水部の吸水口の周辺を掘削し、揚水ポンプが土砂を吸い込み破損を起こすのを防止した。

(10) 土壌侵蝕計測枠工

土壌侵蝕圃場内には重機を入れずにファームテクターのみで表土を 5%のスロープに均平し、掘削面のみバックホウで掘削した。

(11) 建築工事

① 下部構造物

盛土地盤であるため、基礎定盤の締め固めを入念に行い、布基礎と土間コンクリートを一体化（ラーメン構造）して、不等沈下が発生しないよう対処した。

② 上部構造物

時期が乾期であるため、コンクリートのひび割れが発生しやすいので、コンク

リートの打設後の養生，配筋の定着，継手長等の確認を徹底させ、施工した。

(12) 安全管理

本工事の施工場所は農村であるため、車輌関係等の事故もなく、無事故で工事を完了することができた。

4－3 工事出来高

4－3－1 本体工事

(1) 中間出来高（1回）

Inspection Committeeによる中間検査は1991年11月18日に行われた。中間検査時点での各工事の出来高は以下に示す通りであり、全体出来高は43.6%であった。
（出来高調書は資料4－1参照）

		BILL OF QUANTITIES (Direct Cost)				
Appellation	Quantity plan	Quantity actual	Unit	Price plan	Price actual(Bt)	Remarks
1) Reservoir	1.00	0.00	set	45,000	0	
2) Drainage Canals	1.00	1.00	set	802,000	61,445	
3) Farm Roads	1.00	1.00	set	734,000	378,651	
4) Finishing of Field	1.00	1.00	set	138,000	138,000	
5) Irrigation Facilities	1.00	0.00	set	1,327,000	0	
6) Arrangement of Building Site	1.00	1.00	set	910,800	778,009	
7) Buildings	1.00	0.00	set	2,045,000	0	
8) Carry of Materials	1.00	1.00	set		1,262,735	
Grand-total				6,001,800	2,618,840	43.60%

(2) 中間出来高（2回）

Inspection Committeeによる中間検査は1991年12月18日に行われた。中間検査時点での各工事の出来高は以下に示す通りであり、全体出来高は72.3%であった。
（出来高調書は資料4－1参照）

	BILL OF QUANTITIES (Direct Cost)					
Appellation	Quantity plan	Quantity actual	Unit	Price plan	Price actual(Bt)	Remarks
1) Reservoir	1.00	0.00	set	45,000.00	0	
2) Drainage Canals	1.00	1.00	set	802,000.00	416,781	
3) Farm Roads	1.00	1.00	set	734,000.00	487,288	
4) Finishing of Field	1.00	1.00	set	138,000.00	138,000	
5) Irrigation Facilities	1.00	0.00	set	1,327,000.00	218,000	
6) Arrangement of Building Site	1.00	1.00	set	910,800.00	778,009	
7) Building	1.00	0.00	set	2,045,000.00	1,473,730	
8) Carry of Materials	1.00	1.00	set		829,385	
Grand-total				6,001,800.00	4,341,193	72.30%

（3）　完成出来高

Inspection Committeeによる完成検査は1992年 3月 2日に行われた。完成検査時点での出来高は100 %であり、検査調書は資料４－１に示す。

4－3－2　土壌侵蝕計測枠工

（1）　完成出来高

Inspection Committeeによる完成検査は1992年 3月 2日に行われた。完成検査時点での出来高は100 %であり、検査調書は資料４－１に示す。

4－3－3　雑工事

（1）　完成出来高

Inspection Committeeによる完成検査は1992年 3月 2日に行われた。完成検査時点での出来高は100 %であり、検査調書は資料４－１に示す。

4－4　事業費

4－4－1　契約金額

（1）　本工事

本工事の契約金額並びに内訳は以下の通りである。

	バーツ
1．土木工事	
1－1．溜池造成工	45,000
－2．排水路工	802,000
－3．道路工	734,000
－4．圃場均平工	138,000
－5．畑地潅漑施設工	1,327,000
－6．建物敷地造成工	910,800
直接工事費　計	3,956,800
諸経費	989,200（25%）
合　　計	4,946,000
2．建築工事	
2－1．試験室	1,004,000
－2．計測室並びに貯蔵庫	842,000
－3．車庫	139,000
－4．乾燥場	60,000
直接工事費　計	2,045,000
諸経費	409,000（20%）
合　　計	2,454,000
総　合　計	7,400,000

（2） 土壌侵蝕計測枠工事

土壌侵蝕計測枠工事の契約金額並びに内訳は以下の通りである。

	バーツ
Ⅰ．直接工事費	
1．試験枠	597,336
2．土工事	134,540
直接工事費　計	731,876
Ⅱ．諸経費	73,188 (10%)
合　　計	805,064
≒	800,000

（3） 圃場内送電線工事

圃場内送電線工事の契約金額は以下の通りである。

	バーツ
工事費	280,056

（4） 雑工事

雑工事の契約金額並びに内訳は以下の通りである。

	バーツ
Ⅰ．直接工事費	
1．サインボード	50,000
2．国旗掲揚台	33,870
3．ネームボード	11,500
4．交通遮断機	10,000
5．暗渠工	60,382
6．縁石工	63,000
7．圃場内整備工	150,000
8．スプリンクラー整備工	100,000
9．水槽設置工	21,600
直接工事費　計	500,352
Ⅱ．諸経費	100,071 (20%)
合　　計	600,423
≒	600,000

（5） 付帯資材

付帯資材の契約金額並びに内訳は以下の通りである。

	バーツ
1．カオソンクワン用トラクターアタッチメント	
2．苗畑資材等	480,000

4－4－2　支払い実績

契約書に従い、工事の進捗状況に応じ次に示す段階で支払いを行った。

1.　本体工事

(1)　前払い

工事に必要な機材，資材の搬入が行われ、工事現場に適切に配備され、Inspection Committeeの承認が得られた時点。

①検査日　；　1991年 9月27日
②支払い金額　；　740,000 バーツ（契約金額の10%）
③支払い日　；　1991年10月 5日

（資料４－１参照）

(2)　中間払い（１回）

工事の進捗状況が40%に達し、Inspection Committeeによる中間検査に合格した時点。

①検査日　；　1991年11月18日
②支払い金額　；　2,220,000 バーツ（契約金額の30%）
③支払い日　；　1991年11月28日

（資料４－１参照）

(3)　中間払い（２回）

工事の進捗状況が70%に達し、Inspection Committeeによる中間検査に合格した時点。

①検査日　；　1991年12月18日
②支払い金額　；　2,220,000 バーツ（契約金額の30%）
③支払い日　；　1991年12月26日

（資料４－１参照）

(4)　最終払い

工事が完成し、Inspection Committeeによる完成検査に合格した時点。

①検査日　；　1992年 3月 2日
②支払い金額　；　2,220,000 バーツ（契約金額の30%）
③支払い日　；　1992年 3月12日

（資料４－１参照）

2.　土壌侵蝕計測枠工

工事が完成し、Inspection Committeeによる完成検査に合格した時点。

①検査日　；　1992年 3月 2日
②支払い金額　；　800,000 バーツ
③支払い日　；　1992年 3月12日

（資料４－１参照）

3. 雑工事

工事が完成し、Inspection Committeeによる完成検査に合格した時点。

①検査日	;	1992年 3月 2日
②支払い金額	;	600,000 バーツ
③支払い日	;	1992年 3月12日

（資料４－１参照）

４－４－３ 工事諸費

工事諸費275,000 バーツの会計報告は以下の通りである。

		バーツ
①調査研究謝費	;	0
②資機材購入費	;	2,000
③消耗品費	;	2,000
④交通費	;	0
⑤域内旅費	;	6,000
⑥通信運搬費	;	5,000
⑦印刷・製本費	;	7,000
⑧借料損料	;	165,000
⑨庸人費	;	60,000
⑩会議費	;	0
⑪雑役務費	;	27,550
合　　計	;	274,550
残　　高	;	450（JICAタイ事務所に返納）

（なお、領収書はJICAタイ事務所に保管）

４－５ 施設使用における注意事項

本圃場及び付属施設使用における注意事項は以下の通りである。

（１） 排水路施設

排水路はすべて素掘の土水路なので、特に雨期に雨水による土砂堆積，法面の崩落が予想される。これらの点については、土砂の浚渫，バヒアグラスの植え付け等の維持管理が適期に必要であると考えられる。

（２） 農道施設

農道は、表層の厚さが10cmのラテライトなので上記の(1) 排水路施設と同じく雨期に雨水による法面の崩落が予想される。この点においては、バヒアグラスの植え付け等の維持管理が適期に必要であると考えられる。

（3）　畑地潅漑施設

吸込管の吸込みできるダムの最低水位をEL.191.200までとすること（吸込管より30cm上部の水位まで）が必要である。これ以下にするとパイプに空気が入り、ノッキングを起こしポンプに支障をきたす恐れがあり、ポンプ小屋の近くに標尺を建て水位を管理すること、パイプラインの特に配水部（PVC）のラインに注意して管の破損が起こらないよう農業機械を使用するよう心掛けることが必要である。

（4）　土壌侵蝕計測枠施設

計測枠内の集水部にたまる排水は、排水栓にホースを小排水路まで取付け排水するようにする。そのままでは法面を崩落させる要因になるので注意する。

添付書類

資　料　目　次

頁

資料１－１　業務実績表 …… 1

資料２－１　Ａ１フォーム …… 10
資料２－２　補足Ｒ／Ｄ …… 14
資料２－３　予算示達申請 …… 15
資料２－４　口上書の交換 …… 18
資料２－５　予算示達書 …… 21

資料３－１　入札案内，入札心得 …… 23
資料３－２　土壌侵蝕測定試験枠を除く工事費内訳明細書 …… 29
資料３－３　事前資格審査表（１） …… 48
資料３－４　事前資格審査表（２） …… 54
資料３－５　プロポーザル（１） …… 58
資料３－６　プロポーザル（２） …… 76
資料３－７　契約書，仕様書 …… 94
資料３－８　銀行保証書 …… 146
資料３－９　工事用資機材に対する担保同意書 …… 147
資料３－10　非落札業者に対する通知書 …… 148
資料３－11　インスペクション・コミティー委嘱通知書 …… 149
資料３－12　土壌侵蝕測定試験枠の工事費内訳明細書 …… 151
資料３－13　土壌侵蝕測定試験枠工事契約書 …… 155
資料３－14　電力公社による高圧線引込み及び圃場内送電工事見積書… 160
資料３－15　民間業者による圃場内送電工事見積書 …… 162
資料３－16　資材供与に関する見積書等 …… 164
資料３－17　電力工事契約書 …… 165
資料３－18　雑工事契約書 …… 169
資料３－19　単価表 …… 176

資料４　施工監理関係資料 …… 243
資料４－１　インスペクション・コミティー …… 244
資料４－２　完成出来高調書 …… 282
資料４－３　業者よりの工程表 …… 303
資料４－４　工事実施状況報告書 …… 304
資料４－５　業務打合せ簿 …… 316

図面集 …… D-1
写真集 …… P-1

資料１－１

業　務　実　績　表

自　平成　3年　7月20日
至　平成　3年　8月18日
氏名　石山茂積

月日	曜日	滞在日数	業務内容	滞在地	備考
7月20日	土	1	移動　成田→バンコック	バンコック	
21日	日	2	休日	〃	
22日	月	3	JICAタイ事務所にて打合わせ	〃	
23日	火	4	工事用資材の価格調査	〃	
24日	水	5	特に畑地灌漑用資機材について価格調査	〃	
25日	木	6	移動　バンコック→コンケン	コンケン	
26日	金	7	現場踏査　事務所設営	〃	
27日	土	8	現場とくにRIDによるダム工事について調査	〃	
28日	日	9	溜池数の掘削土量計算	〃	
29日	月	10	工事用資材の価格調査	〃	
30日	火	11	土壌侵蝕計測試験枠についてタイ担当者と打合わせ	〃	
31日	水	12	溜池の水替え方法について検討	〃	
8月 1日	木	13	RIDのダム工事による土取り跡の処理について打合わせ	〃	
2日	金	14	引きつづき工事用資材の価格調査	〃	
3日	土	15	同　上	〃	
4日	日	16	休日	〃	
5日	月	17	RIDのダム位置およびその満水位等について流量開始	〃	
6日	火	18	施工業者の能力調査	〃	
7日	水	19	単価表の積算開始	〃	
8日	木	20	タイ側と工事全般について説明会	〃	
9日	金	21	単価表の積算継続	〃	
10日	土	22	内訳明細書積算開始	〃	
11日	日	23	休日	〃	
12日	月	24	現場説明準備　契約図書整理	〃	
13日	火	25	同　上	〃	
14日	水	26	同　上	〃	
15日	木	27	業者提出の資格審査表検討	〃	
16日	金	28	高圧線よりの電気引込みについてタイ側と打合わせ	〃	
17日	土	29	RIDのポンプによる水替えの状況調査	〃	大雨　洪水
18日	日	30	休日	〃	連続降雨

業　務　実　績　表

自 平成 3年 8月19日
至 平成 3年 9月17日
氏名 石山茂積

月 日	曜 日	滞在日数	業　務　内　容	滞在地	備　考
8月19日	月	31	降雨中の現場の状況調査	コンケン	連続降雨
20日	火	32	測量成果により図面修正	〃	雨やむ
21日	水	33	工事費積算ほぼ完了	〃	
22日	木	34	現場説明実施	〃	
23日	金	35	土壌侵蝕計測試験枠について短期専門家と打合わせ	〃	
24日	土	36	土壌侵蝕計測試験枠の概算工事費の検討	〃	
25日	日	37	休日	〃	
26日	月	38	事務整理	〃	
27日	火	39	報告書作成の準備開始	〃	
28日	水	40	現説参加業者よりの質問に答える	〃	
29日	木	41	RIDのダム工事による土取り跡の整理について現場で検討	〃	
30日	金	42	事務整理	〃	
31日	土	43	現場で強雨による土壌侵蝕状況調査	〃	強雨
9月 1日	日	44	休日	〃	
2日	月	45	5日のプロポーサル開封についてJICAタイ事務所と打合わせ	〃	
3日	火	46	土壌侵蝕計測試験枠の構造案の提示を受け検討を開始する	〃	
4日	水	47	終盤にむけての後取りを組む	〃	
5日	木	48	プロポーザル開封整理	〃	
6日	金	49	契約書作成準備	〃	
7日	土	50	JICAタイ事務所での打合わせ資料作成	〃	
8日	日	51	移動　コンケン→バンコック	バンコック	
9日	月	52	JICAタイ事務所で打合わせ　請負業者決定	〃	
10日	火	53	請負者 Suvalee Co.,Ltd.と契約打合わせ　コンケンへ移動	コンケン	
11日	水	54	タイ側と全般事項について討論会　土壌侵蝕計測試験枠の構造確定	〃	
12日	木	55	工事費全般について過不足の検討	〃	
13日	金	56	同　上	〃	
14日	土	57	事務所整理	〃	
15日	日	58	移動　コンケン→バンコック	バンコック	
16日	月	59	JICAタイ事務所で請負者代理人も交えて打合わせ	〃	
17日	火	60	帰国　バンコック→成田		

業　務　実　績　表

平成3年 9月

自 平成3年9月17日
至 平成4年3月15日

氏名 後藤義徳

月日	曜日	滞在日数	業務工程	滞在地	備考
9月17日	火	1	移動 BANGKOK → KHON KAEN	KHON KAEN	
18日	水	2	工事工程打合せ	〃	
19日	木	3	現場事務所設置	〃	
20日	金	4	測量手順打合せ	〃	
21日	土	5	施工監理	〃	
22日	日	6	休み	〃	
23日	月	7	施工監理	〃	
24日	火	8	〃	〃	
25日	水	9	〃	〃	
26日	木	10	起工式	〃	
27日	金	11	施工監理，前払い検査（10%）	〃	
28日	土	12	〃	〃	
29日	日	13	休み	〃	
30日	月	14	施工監理	〃	

業　務　実　績　表

平成3年10月

月日	曜日	滞在日数	業務工程	滞在地	備考
10月1日	火	15	施工監理	KHON KAEN	
2日	水	16	〃	〃	
3日	木	17	〃	〃	
4日	金	18	〃	〃	
5日	土	19	〃	〃	
6日	日	20	休み	〃	
7日	月	21	施工監理	〃	
8日	火	22	〃	〃	
9日	水	23	〃	〃	
10日	木	24	〃	〃	
11日	金	25	〃	〃	
12日	土	26	〃	〃	
13日	日	27	休み	〃	
14日	月	28	施工監理	〃	
15日	火	29	〃	〃	
16日	水	30	〃	〃	
17日	木	31	〃	〃	
18日	金	32	〃	〃	
19日	土	33	〃	〃	
20日	日	34	休み	〃	
21日	月	35	施工監理	〃	
22日	火	36	〃	〃	
23日	水	37	〃	〃	
24日	木	38	〃	〃	
25日	金	39	〃	〃	
26日	土	40	〃	〃	
27日	日	41	休み	〃	
28日	月	42	施工監理	〃	
29日	火	43	〃	〃	
30日	水	44	〃	〃	
31日	木	45	〃	〃	

業務実績表

平成3年11月

月日	曜日	滞在日数	業務工程	滞在地	備考
11月1日	金	46	施工監理	KHON KAEN	
2日	土	47	〃	〃	
3日	日	48	休み	〃	
4日	月	49	施工監理	〃	
5日	火	50	〃	〃	
6日	水	51	〃	〃	
7日	木	52	〃	〃	
8日	金	53	〃	〃	
9日	土	54	〃	〃	
10日	日	55	休み	〃	
11日	月	56	施工監理	〃	
12日	火	57	〃	〃	
13日	水	58	〃	〃	
14日	木	59	〃	〃	
15日	金	60	〃	〃	
16日	土	61	〃	〃	
17日	日	62	休み	〃	
18日	月	63	施工監理，中間検査（70%）	〃	
19日	火	64	〃	〃	
20日	水	65	〃	〃	
21日	木	66	〃	〃	
22日	金	67	〃	〃	
23日	土	68	〃	〃	
24日	日	69	休み	〃	
25日	月	70	施工監理	〃	
26日	火	71	〃	〃	
27日	水	72	〃	〃	
28日	木	73	〃	〃	
29日	金	74	〃	〃	
30日	土	75	〃	〃	

業 務 実 績 表

平成3年12月

月日	曜日	滞在日数	業務工程	滞在地	備考
12月1日	日	76	休み	KHON KAEN	
2日	月	77	施工監理	〃	
3日	火	78	〃	〃	
4日	水	79	〃	〃	
5日	木	80	〃	〃	
6日	金	81	〃	〃	
7日	土	82	〃	〃	
8日	日	83	休み	〃	
9日	月	84	施工監理	〃	
10日	火	85	〃	〃	
11日	水	86	〃	〃	
12日	木	87	〃	〃	
13日	金	88	〃	〃	
14日	土	89	〃	〃	
15日	日	90	休み	〃	
16日	月	91	施工監理	〃	
17日	火	92	〃	〃	
18日	水	93	〃 , 中間検査(70%)	〃	
19日	木	94	〃	〃	
20日	金	95	〃	〃	
21日	土	96	〃	〃	
22日	日	97	休み	〃	
23日	月	98	施工監理	〃	
24日	火	99	〃	〃	
25日	水	100	〃	〃	
26日	木	101	〃	〃	
27日	金	102	〃	〃	
28日	土	103	〃	〃	
29日	日	104	休み	〃	
30日	月	105	休み	〃	
31日	火	106	休み	〃	

業　務　実　績　表

平成4年 1月

月日	曜日	滞在日数	業　務　工　程	滞在地	備　考
1月1日	水	107	休み	KHON KAEN	
2日	木	108	施工監理	〃	
3日	金	109	〃	〃	
4日	土	110	〃	〃	
5日	日	111	休み	〃	
6日	月	112	施工監理	〃	
7日	火	113	〃	〃	
8日	水	114	〃	〃	
9日	木	115	〃	〃	
10日	金	116	〃	〃	
11日	土	117	〃	〃	
12日	日	118	休み	〃	
13日	月	119	施工監理	〃	
14日	火	120	〃	〃	
15日	水	121	〃	〃	
16日	木	122	〃	〃	
17日	金	123	〃	〃	
18日	土	124	〃	〃	
19日	日	125	休み	〃	
20日	月	126	施工監理	〃	
21日	火	127	〃	〃	
22日	水	128	〃	〃	
23日	木	129	〃	〃	
24日	金	130	〃	〃	
25日	土	131	〃	〃	
26日	日	132	休み	〃	
27日	月	133	施工監理	〃	
28日	火	134	〃	〃	
29日	水	135	〃	〃	
30日	木	136	〃	〃	
31日	金	137	〃	〃	

業務実績表

平成4年2月

月日	曜日	滞在日数	業務工程	滞在地	備考
2月1日	土	138	施工監理	KHON KAEN	
2日	日	139	休み	〃	
3日	月	140	施工監理	〃	
4日	火	141	〃	〃	
5日	水	142	〃	〃	
6日	木	143	〃	〃	
7日	金	144	〃	〃	
8日	土	145	〃	〃	
9日	日	146	休み	〃	
10日	月	147	施工監理	〃	
11日	火	148	〃	〃	
12日	水	149	〃	〃	
13日	木	150	〃	〃	
14日	金	151	〃	〃	
15日	土	152	〃	〃	
16日	日	153	休み	〃	
17日	月	154	施工監理	〃	
18日	火	155	〃	〃	
19日	水	156	〃	〃	
20日	木	157	〃	〃	
21日	金	158	〃	〃	
22日	土	159	〃	〃	
23日	日	160	休み	〃	
24日	月	161	施工監理	〃	
25日	火	162	〃	〃	
26日	水	163	〃	〃	
27日	木	164	〃	〃	
28日	金	165	〃	〃	
29日	土	166	報告書作成	〃	

業務実績表

平成7年3月

月日	曜日	滞在日数	業務工程	滞在地	備考
3月1日	日	167	休み	KHON KAEN	
2日	月	168	完成検査（本体，SO，雑工事）	〃	
3日	火	169	報告書作成	〃	
4日	水	170	〃	〃	
5日	木	171	完成式	〃	
6日	金	172	報告書作成	〃	
7日	土	173	〃	〃	
8日	日	174	休み	〃	
9日	月	175	会計整理，写真整理	〃	
10日	火	176	〃	〃	
11日	水	177	〃	〃	
12日	木	178	KHON KAEN → BANGKOK	BANGKOK	
13日	金	179	JICA OFFICE 挨拶	〃	
14日	土	180	帰国準備	〃	
15日	日	181	移動 BANGKOK → 成田	東京	

資料２－１

所長	次長			担当
			検査	

秘区分

受付 2.9.5 農業開発協力部

業務公信

部長	総括課長	総括課長代理	課長	課長代理	担当者

第TI-1380号

平成２年８月29日

農業開発協力部長 殿

受付番号 2年9-5 国際協力事業団

タイ事務所長

件名	東北タイ農業開発研究計画短期専門家
引用公・電信日付・番号	

標記に関し、

JICAより別紙書(NO.1709/24222)をもって派遣方要請があったところ、別添送付いたしますのでよろしくお取り計らい願います。

以上

付属添付 あり☑ なし□	写配布・希望先：

国際協力事業団

受付印 413号
22 AUG 1990
国際協力事業団

大 使	主 経 済
福 田 公 使	
今 川 公 使	
経 協 参 事 官	JICA
	写記付先：
	写記先：

所長	次長	次印		担当

DEPARTMENT OF TECHNICAL AND ECONOMIC COOPERATION
Krung Kasem Road, Bangkok, Thailand
Cable : DEPTECO
TEL. 2800980 - 4

No. 1709/ 24222

The Department of Technical and Economic Cooperation presents its compliments to the Embassy of Japan and, with reference to the Record of Discussions dated December 16, 1988, has the honour to request, on behalf of the Ministry of Agriculture and Cooperatives, services of two (2) short-term experts on Construction Supervising for the Agricultural Development Research Center Project in Northeast Thailand, under the Technical Cooperation Scheme of the Colombo Plan.

Enclosed herewith are 8 copies of form A1 for the Embassy's consideration.

The Department of Technical and Economic Cooperation avails itself of this opportunity to renew to the Embassy the assurances of its highest consideration.

在外日本国大使館 接受 AUG 21 1990

กรมวิเทศสหการ
DEPARTMENT OF TECHNICAL AND ECONOMIC COOPERATION
August 17 B.E. 2533 (1990)

Enclosures : As stated

The Embassy of Japan,
Bangkok.

DEC-III/Japan Sub-Division
Tel. 281-2747
FAX : (662) 280-1248

Form A 1.
(1962 *Revision*)

THE COLOMBO PLAN
COUNCIL FOR TECHNICAL CO-OPERATION IN ASIA AND THE PACIFIC

APPLICATION FOR EXPERT

By the Government of Thailand to the Government of Japan

for an expert in Supervising

Notes.—(*a*) This form has been devised for the general guidance of co-operating countries in order to facilitate the supply of relevant information and data necessary to afford an adequate appreciation of the nature of the technical assistance required. Full and accurate completion of this application form will avoid much reference back and lead to speedier action.

(*b*) The requisite number of copies of the Form A 1, including a copy for the Colombo Plan Bureau, duly endorsed by the appropriate Foreign Aid Department of the requesting government should be forwarded to the donor government concerned through the appropriate channels.

1. Background Information This section should show as precisely as possible the general nature of the project for which the expert is required, stating whether it comes within the Government's development programme. It is important to indicate whether the project is a new enterprise or whether it was started previously. In the latter case, any assistance received under other technical co-operation programmes (*e.g.* under United Nations auspices) should be stated. With regard to industrial enterprises, some impression of the size is important and the output and number of workers to be employed are useful indications. The type of process, make and age of industrial or scientific equipment with which the expert will be concerned should be specified. In the case of academic establishments, it is an advantage to know the number of annual intake of students, their level of attainment, numbers and status of existing staff and details of any research facilities and the level of research being undertaken. (Copies of brochures, annual reports, financial statements, calendars, syllabus of instruction, etc. should be attached where applicable).	The Government of Japan and the Government of the Kindom of Thailand have been cooperating with each other in implementing the Agricultural Development Research Project in Northeast Thailand for the purpose of strengthening research activities and thus contributing to the agricultural development in Northeast Thailand. The Project aims at strengthening agricultural research activities, especially those directed at; assessment of natural environment and resources to plan proper land use; development of agronomic technology suited to locality; and identification and elimination of the existing production constraints. The technical cooperation for this project has been put into implementation with the term of five years starting from December 1983. The project is now in the Second Phase which has started from December 1988.
2. Specification for the post :* (*a*) post title	Short-term expert on supervising
(*b*) duties for which the expert will be responsible. These should preferably be listed, and it is important to give as much detail as possible	Guidance and advice on construction of demonstration farm for proper land use
(*c*) authority to whom expert will be responsible	Ministry of Agriculture and Cooperatives
(*d*) qualification and experience required and approximate age limits	Sufficient experience in supervising
(*e*) number of personnel required	Two
3. In the case of continuous projects, give name and particulars of understudy or counterpart who is to work with the expert	Thai counterpart is provided
4. Terms and conditions of appointment : (*a*) duration	Six months (October 1990 - March 1991)
(*b*) actual place of employment, nearest town and post office	Ministry of Agriculture and Cooperatives
(*c*) if living accommodation to be provided, state whether furnished or unfurnished, and whether suitable for married man with family :	
(i) daily allowance for food if accommodation only provided	In Accordance with the Provisions of Agreement on Technical Cooperation between the Government of Japan and the Government of Thailand
(ii) daily rate for accommodation and food if neither are provided in kind	

* It is essential that full particulars should be given. If the space provided is inadequate, particulars should be given on a separate sheet.

4. Terms and conditions of appointment—(*contd*).	
(*d*) daily and nightly rates of subsistence payable when away from base on duty	
(*e*) are costs of internal travel paid or car provided ?	
(*f*) what leave arrangements are suggested ?	
(*g*) extent to which free hospital and medical treatment is to be provided for the expert and his accompanying dependants, if any	
(*h*) is expert free from income tax ?	
(*i*) will personal effects imported on first arrival be cleared free of custom duty ?	
(*j*) does host government undertake to indemnify expert in respect of damages awarded against him for actions performed in the course of his official duties ?	
(*k*) approximate date on which the expert is required to arrive in receiving country	
(*l*) any other information	
5. Proposals for apportionment of costs of salary and allowance and passages	
6. Previous steps, if any, to fill the post : If any previous attempt has been made to fill the post under the Colombo Plan (including ICA) or from any external source (UN, Specialised Agency or other) please indicate :	
(*a*) to whom application was addressed, with date	
(*b*) result or present stage of negotiations	
(*c*) are other experts working in this area in associated projects or have there been experts working in this field previously ? If so, are any reports by these experts available ?	
7. Correspondence : Name, postal and telegraphic address of official to whom correspondence regarding this application should be forwarded	Director-General Department of Technical and Economic Cooperation 962 Krung Kasem Road Bangkok, Thailand

In Accordance with the Provisions of Agreement on Technical Cooperation between the Government of Japan and the Government of Thailand

Signed ..... for Counterpart Agency

Date: .....

Ministry of Agriculture and Cooperatives

August , 1990

Signed ..... on behalf of the Government of .....

(Mr. Pracha Chaowasilp)

~~Deputy Director-General~~

for Director General

15 AUG 1990

For use only by Donor Government

Application accepted/rejected/withdrawn

on behalf of the Department of .....

Date: .....

THARA-DEEWALA

SUPPLEMENTARY NOTE TO THE RECORD OF DISCUSSIONS ON THE JAPANESE TECHNICAL COOPERATION FOR THE AGRICULTURAL DEVELOPMENT RESEARCH PROJECT PHASE II IN NORTHEAST THAILAND

Mr. Nobuji ABE, Resident Representative of the Japan International Cooperation Agency (hereinafter referred to as "JICA") in the Kingdom of Thailand had a series of discussions with the authorities concerned of the Government of the Kingdom of Thailand on the provision of Special Measures by the Government of Japan concerning the Technical Cooperation for the Agricultural Development Research Project Phase II in Northeast Thailand (hereinafter referred to as "the Project").

As a result of the discussions, both sides agreed to recommend the following to their respective Governments.

In order to enhance the smooth implementation of the Project, the Government of Japan will, in accordance with the laws and regulations in force in Japan, take necessary measures through JICA to supplement a portion of the local cost expenditure for the construction of demonstration farm for proper land use in Khao Swan Kwang, Khon Kaen.

Bangkok, January 10, 1991

Nobuji ABE
Resident Representative
JICA Thailand Office

Yookti Sarikaphuti
Permanent Secretary
Ministry of Agriculture
and Cooperatives

資料２－３

秘区分

受付 3.2.18 農業開発協力部

業務公信

第IL-2624号

平成 3 年 2 月 8 日

農業開発協力部長 殿

受付 3.2.18 国際協力事業団

タイ事務所長

件名	東北タイ農業開発研究計画ローカルコスト負担
引用公・電信 日付・番号	

標記事業に係る口上書交換に関し、現在、JTEC内で決裁中のため、あと一週間程度はかかるものと思われます。交換が終了次第御連絡しますが、本件に係る予算の手当につきよろしくお願いします。

以上

付属添付 あり☑ なし☐	写配布・希望先・

国際協力事業団

〔報告様式－７〕

事業団本部			プロジェクト		
部長	課長	担当	リーダー	調整員	担当
					鎌田和彦

事務連絡

番号（ 157 ）～
平成 3 年 2 月 4 日

国際協力事業団

農業開発協力部長 殿

東北タイ農業開発研究計画

後藤虎男

件名 平成２年度プロジェクト基盤整備費による
土地利用計画展示圃場建設について

標記の件に関し、別添”実施設計調査団報告書”通り、その建設を申請します。

S 61. 12. 100×100 (農開)

概算事業費

総計　　８，９２７，０００バーツ

内訳

直接工事費	６，５６６，０００バーツ
間接工事費	１，３１３，０００バーツ
予備費	７８８，０００バーツ
工事諸費	２６０，０００バーツ

工事内容

溜池造成工

排水路工

道路工

圃場均平工

畑地灌漑施設

土壌侵食計測試験枠

建物及び乾燥場建設

圃場内送電線工事

資料２－４

JICA 農技協課 小路様 '91.4.3

00184

部長	総括課長	総括課長代理	課長	課長代理	担当者
	中島				ヨト

農業開発協力部

第 613 号

昭和 平成3年4月1日

受付 号
3.4.-8
国際協力事業団

受付
3.4.9
農業開発協力部

外務大臣殿

在タイ
岡崎大使

件名
プロジェクト方式技術協力(農林水産業協力・ローカルコスト負担)

引用公・電信 日付・番号	主管課（文書記号）
官年費電経協技合第21407号	経協技

本件に関し、タイ・造林研究訓練II及びタイ・東北タイ農業開発研究に関し2、ローカルコスト負担に係る口上書を交換したところ、先方口上書の本書及び当館口上書の写を別添送付申し上げる。

(3)

経協局 3.4.5 技協課

本信送付先：	付属添付 ✓
本信写送付先：	付属空便（行） □
省内写配布希望先：	付属空便（DP） □

（昭和六三・四・一改正）

GA－12－1

在外公館

大　　使	主　管 経 済
池田公使	
今川公使	
担当参事官	
	写送付先：
	写配布先：

DEPARTMENT OF TECHNICAL AND ECONOMIC COOPERATION

Krung Kasem Road, Bangkok, Thailand
Cable : DEPTECO
TEL. 2800980 - 4

No. 1709/4670

The Department of Technical and Economic Cooperation presents its compliments to the Embassy of Japan and, with reference to the Supplementary Note to the Record of Discussions on the Japanese Technical Cooperation for the Agricultural Development Research Project Phase II in the Northeast Thailand dated January 10, 1991, has the honour to request, on behalf of the Ministry of Agriculture and Cooperatives, a portion of the local cost expenditure for the construction of demonstration farm for proper land use in Khao Suan Kwang, Khon Kaen, to enhance the smooth implementation of the above-mentioned project.

The Department of Technical and Economic Cooperation avails itself of this opportunity to renew to the Embassy the assurances of its highest consideration.

DEPARTMENT OF TECHNICAL AND ECONOMIC COOPERATION

February [illegible] B.E. 2533 (1991)

在日本国大使館 接受 FEB. 22. 1991 RECEIVED Embassy of Japan, Thailand

The Embassy of Japan,
Bangkok.

DEC-III/Japan Sub-Division
Tel. 281-2747
FAX: (662) 280-1248

EMBASSY OF JAPAN
BANGKOK

No. 26/91

The Embassy of Japan presents its compliments to the Department of Technical and Economic Cooperation and, with reference to the latter's Note No. 1709/4670 dated February 21, B.E. 2534 (1991), has the honour to inform that the local cost expenditure for the Agricultural Development Research Center Project (Phase II) in Northeast Thailand on the construction of demonstration farm for proper land use in Khao Suan Kwang, Khon Kaen, proposed in the above Note is accepted by the Government of Japan.

It would be appreciated if the Department would be good enough to communicate the above information to the authorities concerned.

The Embassy of Japan avails itself of this opportunity to renew to the Department of Technical and Economic Cooperation the assurances of its highest consideration.

EMBASSY OF JAPAN 日本国大使館 THAILAND

February 25, 1991

12-JUN-1991 15:58 JICA THAILAND. 66 2 2553725 P.0
9TH 0812D 12:00 JICA NOW NOT

発信紙 AD 406 号 1/2
3年 6月12日
URGENT・CONFIDENTIAL

受付第542号
12 JUN 1991
国際協力事業団

タイ事務所長殿 TO: Mr. OTANI

農業開発協力部長

東北タイ農業開発研究計画II パイロットインフラ整備事業

関連文書： TI-2624号

標記に関し、申請を承認します。

また 必要経費は下記のとおり追って示達されます。

なお、本件は繰越し予算を充当しているので年度内執行については十分留意願います。

念のため。

記

1. 示達額

51,936千円

内訳 直接工事費 38,199

間接工事費 7,640

予備費 4,584

AD 406 分 2/2

工事諸費 1,513

2. 予算科目（平成2年度繰越予算）

(項) 農林水産業協力事業費

(目) プロジェクト基盤整備費

以上

JAPAN INTERNATIONAL COOPERATION AGENCY

THAILAND OFFICE

Date _____

Invitation for Bids No. _____

The Japan International Cooperation Agency, Thailand Office, hereby invites sealed written bids for the Construction Work of The Demonstration Farm on the Agricultural Development Research Project Phase II in North-East Thailand (hereinafter referred to as "the Project") which is situated in Khao Suan Kwang about 40 km off to the north of Khon Kaen and along the National Road. The project has a total area of about 25.0 ha.

This Contract will include, among others, the following ;

1. Terms and Conditions of this Contract
2. Pledge Agreement
3. Technical Specifications
4. Bill of Quantities
5. Drawings

Bid shall be addressed to Mr. Nobuji ABE, Resident Representative, Japan International Cooperation Agency, Thailand Office, And it shall be submitted via the Provisional Office of the JICA Thailand Office in the Agricultural Development Research Center (A.D.R.C.), Khon Kaen, and marked "Sealed Proposal, A. D. R. P. Phase II ".

The date for the opening of bids will be held at 10.00 o'clock ~~p. m.~~ / a. m., Thailand Standard Time on September 5th , 1991, at the Provisional Office of the JICA, Khon Kaen.

A pre-bidding conference will be scheduled on August 22nd , 1991, at 1.00 o'clock p. m. / ~~a. m.~~ at the above mentioned Office. Attendance for bidders is desirable.

Mr. Nobuji ABE
Resident Representative of JICA
Thailand Office

代 石山英樹

I- 1

INSTRUCTION TO BIDDERS

IB-01 PREPARATION OF BIDS

All bids shall be submitted in an original and two(2) copies on or before the hour and date fixed for receipt of bids, in accordance with the Invitation for Bids, and shall conform to the following requirements ;

a) One copy of proposal shall be marked "original". The original and copies of bids shall be submitted in its entirety with all blanks in the proposal properly filled in.

b) Bids prices shall be written in words as well as in figures. In case of discrepancy between the words and figures, the price in words shall prevail.

c) The proposal must be signed by the Bidder with his usual signature and shall show his full business address.

IB-02 BASIS ON WHICH BIDS ARE REQUESTED

The form of the Contract to be awarded is on fixed unit Price, basis of payment to the Contractor, as specifically set forth in these Contract Documents. Bids are requested on the above basis and a proposal which is on any other basis will not be considered.

Quotation of prices shall be made in Thai Baht and the Contractor shall be paid in Local Currency.

IB-03 BID SECURITY

The original, but not the copies of each bid, shall be accompanied by a proposal bond in an amount equivalent to five(5) % of the total bid price in the form of cash or certified check, as a guarantee that the successful bidder will, within ten(10) days from receipt of the notice of award, enter into contract with the Japan International Cooperation Agency, Thailand Office, and complete faithful performance of the work specified in these Contract Documents. In case the successful bidder fails for any reason to execute such

contract within the stipulated time, the bid security shall be forfeited to the Japan International Cooperation Agency, Thailand Office, as liquidated damages.

The bid securities will be returned without interest after the successful bidder has signed the Contract.

IB-04 DELIVERY OF BIDS

Bids shall be directly delivered to the Japan International Cooperation Agency, Thailand Office, via the Provisional Office of the JICA in A.D.R.C., Khon Kaen on or before the hour and date set for the opening of bids.

IB-05 WITHDRAWAL OF BIDS

A bidder will be allowed to withdraw his bid prior to the time set for the opening of bids if he communicates his purpose in writing to the Japan International Cooperation Agency, Thailand Office, and his bid shall be returned to him unopened. No bid can be withdrawn for any reason whatsoever after the opening of bids has been made.

IB-06 BIDDER'S RESPONSIBILITY

The bidders shall be responsible for having taken steps to carefully examine all of the Contract Documents and also to have fully informed themselves as to all conditions, locality and otherwise, affecting the carrying out of the Contract Works. Failure to do so will be at the Bidder's risk.

IB-07 DATA TO BE SUBMITTED WITH PROPOSAL

All proposal shall contain the following documents:

a) A construction schedule showing the detailed proposal plan of operation and construction of each main item in the Bill of Quantities from start to

completion of the Contract work. The schedule shall be in a bar chart form with weeks shown as the least unit of time and each main item on a separate horizontal line. The schedule shall also show expected monthly accomplishment and financial requirements based on the Bill of Quantities.

b) A list of equipment proposed to be used for the performance of the Contract Work. This list shall specifically enumerate the number, type and capacity.

IB-08 INTERPRETATION OF CONTRACT DOCUMENTS

If the prospective Bidder is in doubt as to the true meaning of any part of the Contract Documents, the Bidder may submit to the Japan International Cooperation Agency, Thailand Office, a written request for interpretation allowing sufficient time for a reply to reach him before submission of his bid. Any interpretation of the proposed documents will be made only by a Supplemental Notice duly issued.

IB-09 PRE-BIDDING CONFERENCE

A pre-bidding conference will be scheduled on August 22nd 1991, at 1.00 o'clock p.m./~~a.m.~~ at the Provisional Office of the JICA in A.D.R.C., Khon Kaen. Attendance for Bidders is desirable.

IB-10 COMPARISON OF BIDS

In making its selection, the Japan International Cooperation Agency, Thailand Office will not be bound to award a contract to the bidder submitting the Bid with the lowest indicated cost, but will take into consideration the bid prices, unbalanced bid, guaranteed completion time and other relevant consideration.

IB-11 AWARD OF CONTRACT

Bids will be opened in the presence of the Bidders who may desire to attend such opening by the Japan International Cooperation Agency, Thailand Office, in the Provisional Office of the JICA, Khon Kaen, at 10.00 o'clock p.m./a.m. Thailand Standard Time on September 5th, 1991.

Promptly after the opening of the bids the Japan International Cooperation Agency, Thailand Office will undertake a detailed study and appraisal of the proposal submitted. The Contract will be awarded to the Bidder whose proposal is considered to be the most advantageous to the Japan International Cooperation Agency, Thailand Office. The Japan International Cooperation Agency, Thailand Office reserves the right to reject any and all bids received.

IB-12 BID DOCUMENTS

Bid documents shall include the following;

a) Invitation for Bids
b) Instruction to Bidders
c) Proposal
d) Terms and conditions of this Contract
e) Pledge Agreement
f) Contract
g) Technical Specifications
h) Bill of Quantities
i) Drawings

CONSTRUCTION SCHEDULE

From Sept. 10, 1991
To Feb. 28, 1992

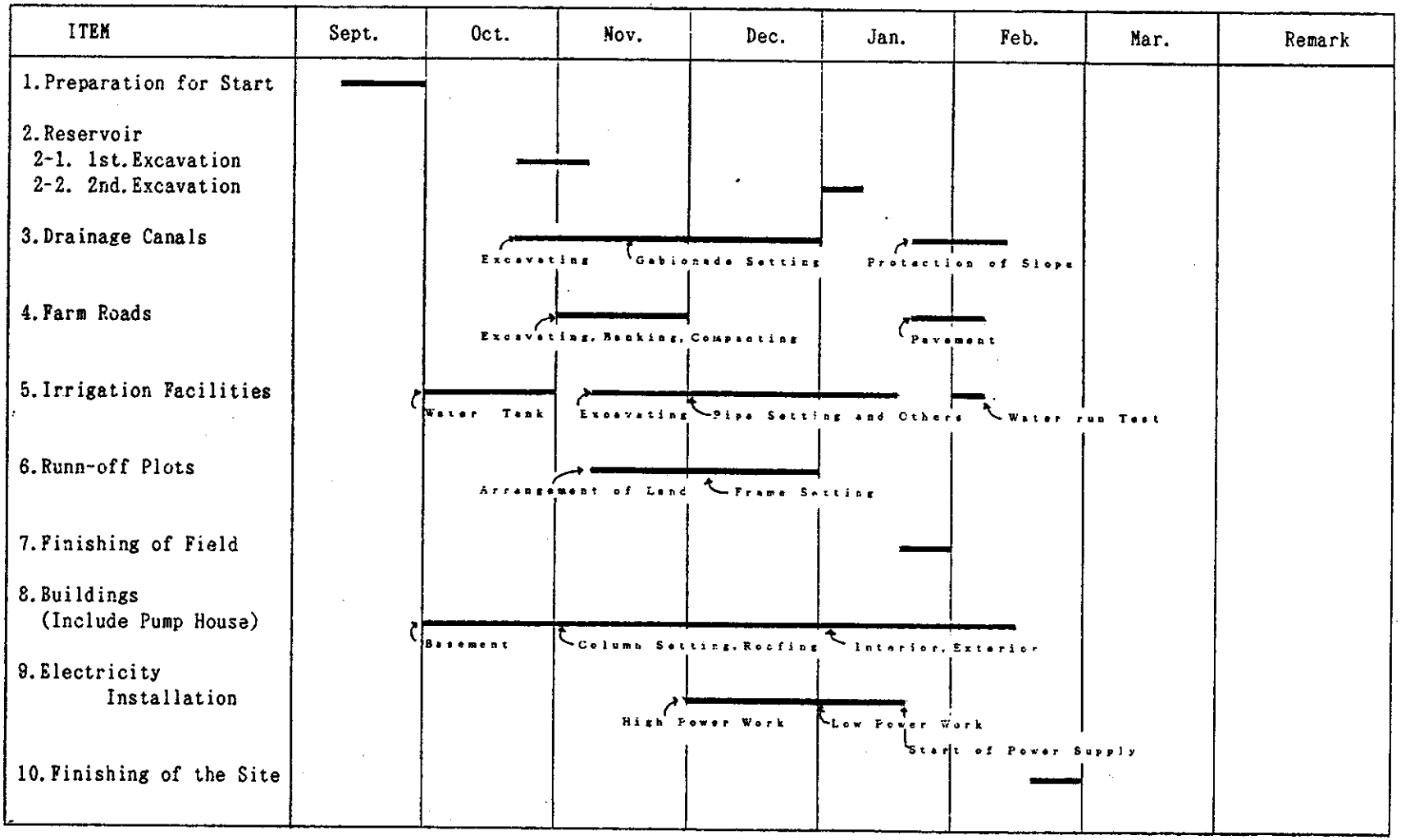

工事費内訳総括表

平成３年９月２日

［Ⅰ］今回発注の対象となるもの

Ⅰ－１　土木工事	
１）溜池造成工	２３４，０００㌦
２）排水路工	８８９，０００㌦
３）道路工	７３４，０００㌦
４）圃場均平工	１３８，０００㌦
５）畑地潅漑施設工	１，３１１，０００㌦
６）土壌侵蝕計測試験枠	－
７）建物敷地整備	２６３，０００㌦
土木工事直接費計	３，５６９，０００㌦
諸経費	８９２，０００㌦
計十	４，４６１，０００㌦
Ⅰ－２　建築工事（含乾燥場）	３，１２３，０００㌦
合　計	７，５８４，０００㌦

［Ⅱ］以後に発注するもの

Ⅱ－１　圃場内送電工事（金額ほぼ確定）	２０７，０００㌦
Ⅱ－２　土壌侵蝕計測枠（未確定）	

［Ⅲ］既に支出額が確定しているもの

工事諸費	２７５，０００㌦

甲

第１号　　溜池造成工事費内訳明細書

金　234,000円

内　訳

項　目	員　数	単位	単価円	金額円	摘　要
1．第１次掘削運搬	2,710.4				
1-1. 土砂留堤築堤土量	1,950.0	㎥	—	—	道路工に計上，支線道路(H)
1-2. 積込，運搬	760.4	〃	48.8	37,108.0	T.S.,D.T.,D=550
1-3. 捨土整理	760.4	〃	10.9	8,288.0	
小　計				45,396.0	
2．第２次掘削運搬					
2-1. 掘削運搬	3,303.0	㎥	46.2	152,599.0	B.H.,D.T.,D=550
2-2. 捨土整理	3,303.0	〃	10.9	36,003.0	
小　計				188,602.0	
計				233,998.0	

甲

第２号　　排水路工工事費内訳明細書

金　889,000円

内　訳

項　　目	員　数	単位	単価円	金額円	摘　　要
1．中央排水路（Bライン）					
1-1.（B）-1　ライン　ℓ70m					
機械掘削	110.6	㎥	22.7	2,511.0	
人力掘削	12.8	〃	75.2	963.0	
法面整形	221.2	㎡	4.2	929.0	
法面保護	140.0	〃	50.9	7,126.0	
ふとん篭　Ⅰ型	25.0	枚	2,234.7	55,868.0	単　No.15
小　　計				67,397.0	
1-2.（B）-2　ライン　ℓ 170m					
機械掘削	1,145.8	㎥	22.7	26,010.0	
人力掘削	25.8	〃	75.2	1,940.0	
法面整形	751.4	㎡	4.2	3,156.0	
法面保護	340.0	〃	50.9	17,306.0	
ふとん篭　Ⅱ型	45.0	枚	2,492.7	112,172.0	単　No.16
小　　計				160,584.0	
1-3.（B）-3　ライン　ℓ 150m					
機械掘削	718.5	㎥	22.7	16,310.0	
人力掘削	17.8	〃	75.2	1,339.0	
法面整形	711.0	㎡	4.2	2,986.0	

乙

項　　目	員　数	単位	単価 B	金額 B	摘　要
法面保護	300.0	㎡	50.9	15,270.0	
ふとん篭　Ⅰ型	24.0	枚	2,234.7	53,633.0	
ふとん篭　Ⅱ型	24.0	〃	2,492.7	59,825.0	
小　　計				149,363.0	
中　　計				377,344.0	
2．支線排水路（D）ライン					
2-1.（D）-1　緩流部　ℓ75m					
機械掘削	51.0	㎥	22.7	1,158.0	
人力掘削	－		－	－	
法面整形	189.0	㎡	4.2	794.0	
法面保護	150.0	〃	50.9	7,635.0	
ふとん篭	－	－	－	－	
小　　計				9,587.0	
（D）-1　急流部　ℓ26m					
機械掘削	14.8	㎥	22.7	336.0	
人力掘削	4.9	〃	75.2	368.0	
法面整形	49.1	㎡	4.2	206.0	
法面保護	52.0	〃	50.9	2,647.0	
ふとん篭　Ⅰ型	8.0	枚	2,234.7	17,878.0	
小　　計				21,435.0	

乙

項　　目	員　数	単位	単価B	金額B	摘　要
2-2. (D) -2　ℓ85m					
機械掘削	54.5	㎥	22.7	1,237.0	
人力掘削	3.1	〃	75.2	233.0	
法面整形（緩流部）	138.6	㎡	4.2	582.0	
法面整形（急流部）	31.9	〃	4.2	134.0	
法面保護	170.0	〃	50.9	8,653.0	
ふとん篭　I型	5.0	枚	2,234.7	11,174.0	
小　　計				22,013.0	
3．支線排水路（A）ライン					
3-1. (A) -1　ℓ 101　m					
機械掘削	104.0	㎥	22.7	2,361.0	
人力掘削	8.5	〃	75.2	639.0	
法面整形	271.7	㎡	4.2	1,141.0	
法面保護	202.0	〃	50.9	10,282.0	
ふとん篭　I型	16.0	枚	2,234.7	35,755.0	
小　　計				50,178.0	
3-2. (A) -2　ℓ64m					
機械掘削	92.2	㎥	22.7	2,093.0	
人力掘削	6.9	〃	75.2	519.0	
法面整形	212.5	㎡	4.2	893.0	
法面保護	128.0	〃	50.9	6,515.0	
ふとん篭　I型	13.0	枚	2,234.7	29,051.0	

乙

項　　目	員　数	単位	単価 B	金額 B	摘　　要
小　　計				39,071.0	
4．支線排水路（E）ライン					
4-1.（E）-1　ℓ95m					
機械掘削	64.6	㎥	22.7	1,466.0	
人力掘削	—		—	—	
法面整形	239.4	㎡	4.2	1,005.0	
法面保護	190.0	〃	50.9	9,671.0	
ふとん篭	—		—	—	
小　　計				12,142.0	
4-2.（E）-2　ℓ90m					
機械掘削	57.9	㎥	22.7	1,314.0	
人力掘削	3.1	〃	75.2	233.0	
法面整形（緩流部）	151.2	㎡	4.2	635.0	
法面整形（急流部）	56.7	〃	4.2	238.0	
法面保護	180.0	〃	50.9	9,162.0	
ふとん篭　I型	5.0	枚	2,234.7	11,174.0	
小　　計				22,756.0	
5．支線排水路（So）-2 ﾗｲﾝ　ℓ155m					
機械掘削	111.6	㎥	22.7	2,533.0	
人力掘削	—		—	—	
法面整形	390.6	㎡	4.2	1,641.0	
法面保護	310.0	〃	50.9	15,779.0	

乙

項　　目	員　数	単位	単価区	金額区	摘　　要
ふとん篭	－		－	－	
小　　計				19,953.0	
中　計（支線排水路計）				197,135.0	
6．西側排水路（C）ライン					
6-1.（C）　ℓ 185m					
機械掘削	190.6	㎥	22.7	4,327.0	
人力掘削	12.2	〃	75.2	917.0	
法面整形	497.7	㎡	4.2	2,090.0	
法面保護	370.0	〃	50.9	18,833.0	
ふとん篭　Ⅰ型	23.0	枚	2,234.7	51,398.0	
小　　計				77,565.0	
6-2.（C）-2　ℓ 115m					
機械掘削	165.6	㎥	22.7	3,759.0	
人力掘削	9.5	〃	75.2	714.0	
法面整形	381.8	㎡	4.2	1,604.0	
法面保護	230.0	〃	50.9	11,707.0	
ふとん篭　Ⅰ型	18.0	枚	2,234.7	40,225.0	
小　　計				58,009.0	
6-3.（C）-3　ℓ 100m					
機械掘削	166.0	㎥	22.7	3,768.0	
人力掘削	10.7	〃	75.2	805.0	
法面整形	363.0	㎡	4.2	1,525.0	

乙

項　　目	員　数	単位	単価 B	金額 B	摘　　要
法面保護	200.0	㎡	50.9	10,180.0	
ふとん篭　Ⅰ型	17	枚	2,234.7	37,990.0	
ふとん篭　Ⅰ型(ダム出尻の補強)	56	〃	2,234.7	125,143.0	22.5÷0.405≒56
小　　計				179,411.0	
中　計（西側排水路計）				314,985.0	
計				889,464.0	

甲

第３号　　道路工工事費内訳明細書

金　734,000円

内訳

項目	員数	単位	単価円	金額円	摘要
1．幹線道路(A) ﾗｲﾝ ℓ434m, W5m					
床堀・表土ハギ	3,320.1	㎡	16.4	54,450.0	厚さ 0.3
心土盛土	2,083.2	〃	19.7	41,039.0	厚さ 0.6
埋戻し	3,320.1	〃	16.4	54,450.0	
路型整形	3,472.0	㎡	2.9	10,069.0	
ラテライト	173.6	㎥	100.0	17,360.0	
盛土転圧	2,083.2	〃	12.3	25,623.0	
法面保護	868	㎡	50.9	44,181.0	
小　計				247,172.0	
2．支線道路(D) ﾗｲﾝ ℓ195m, W4m					
床堀・表土ハギ	1,316.3	㎡	16.4	21,587.0	
心土盛土	819.0	〃	19.7	16,134.0	
埋戻し	1,316.3	〃	16.4	21,587.0	
路型整形	1,365.0	㎡	2.9	3,959.0	
ラテライト	58.5	㎥	100.0	5,850.0	
盛土転圧	819.0	〃	12.3	10,074.0	
法面保護	390.0	㎡	50.9	19,851.0	
小　計				99,042.0	

項　　目	員　数	単位	単価 区	金額 区	摘　　要
3．支線道路(E) ﾗｲﾝ ℓ190m, W4m					
床堀・表土ハギ	1,282.5	㎡	16.4	21,033.0	
心土盛土	798.0	〃	19.7	15,721.0	
埋戻し	1,282.5	〃	16.4	21,033.0	
路型整形	1,330.0	㎡	2.9	3,857.0	
ラテライト	57.0	㎥	100.0	5,700.0	
盛土転圧	798.0	〃	12.3	9,815.0	
法面保護	380.0	㎡	50.9	19,342.0	
小　　計				96,501.0	
4．支線道路(F) ﾗｲﾝ 135m, W4m					
床堀・表土ハギ	911.3	㎡	16.4	14,945.0	
心土盛土	567.0	〃	19.7	11,170.0	
埋戻し	911.3	〃	16.4	14,945.0	
路型整形	945.0	㎡	2.9	2,741.0	
ラテライト	40.5	㎥	100.0	4,050.0	
盛土転圧	567.0	〃	12.3	6,974.0	
法面保護	270.0	㎡	50.9	13,743.0	
小　　計				68,568.0	
5．支線道路(G) ﾗｲﾝ ℓ115m, W4m					
床堀・表土ハギ	776.3	㎡	16.4	12,731.0	
心土盛土	483.0	〃	19.7	9,515.0	
埋戻し	776.3	〃	16.4	12,731.0	

乙

項　　目	員　数	単位	単価 B	金額 B	摘　　要
路型整形	805.0	㎡	2.9	2,335.0	
ラテライト	34.5	㎥	100.0	3,450.0	
盛土転圧	483.0	〃	12.3	5,941.0	
法面保護	230.0	㎡	50.9	11,707.0	
小　　計				58,410.0	
6．支線道路(H) ﾗｲﾝ ℓ260m，W4m					
機械盛土	1,950.0	㎥	16.4	31,980.0	
路型整形	1,118.0	㎡	2.9	3,242.0	
ラテライト	78.0	㎥	100.0	7,800.0	
盛土転圧	1,950.0	㎥	12.3	23,985.0	
法面保護	520.0	〃	50.9	26,468.0	
小　　計				93,475.0	
7．排水路横断工　5ヶ所					
コンクリート（捨コン）	17.2	㎥	1,161.6	19,980.0	
基礎栗石	69.1	〃	586.3	40,513.0	
ふとん篭　Ⅱ型	4.0	枚	2,492.7	9,971.0	
小　　計				70,464.0	
計				733,632.0	

甲

第４号　　圃場均平工工事費内訳明細書

金　　138，000㌦

内　　訳

項　　目	員　数	単位	単価㌦	金額㌦	摘　　要
1．圃場均平	60,000.0	㎡	2.3	138,000.0	
計				138,000.0	

甲

第５号　　畑地潅漑施設工工事費明細書

金 1，311，000B

内　訳

項　　目	員　数	単位	単価B	金額B	摘　要
1．配管工事					
1-1.揚水部					
揚水管　φ80 Steel Pipe	535.5	〃	1,161/6	103,619.0	510 m×1.05
ドレッサー　φ80	3.0	ヶ	360.0	1,080.0	
伏設手間			51.8	155.0	
カップリング　φ80	100.0	〃	300.0	30,000.0	
伏設手間			51.8	5,180.0	
ベンド　φ80	3.0	〃	300.0	900.0	b-1, b-1-1, b-1-2
伏設手間			51.8	155.0	
小　　計				141,089.0	
1-2.配水部　PVC Pipe					
1）配水管　φ125	157.5	m	275.0	43,313.0	150 m×1.05
同　　φ125	126.0	〃	275.0	34,650.0	120 m×1.05
同　　φ 75	94.5	〃	112.5	10,631.0	90 m×1.05
分岐管　125 →50	1	ヶ	1,000.0	1,000.0	t-1
伏設手間			82.3	82.0	
同　125 →75	1	〃	1,000.0	1,000.0	t-2
伏設手間			82.3	82.0	
ベンド　φ125	1	〃	500.0	500.0	b-2
伏設手間			82.3	82.0	
〃　φ 75	1	〃	120.0	120.0	b-3
伏設手間			49.5	50.0	
〃　φ 50	1	〃	80.0	80.0	b-6
伏設手間			41.3	41.0	
小　　計				91,631.0	

項　　目	員　数	単位	単価区	金額区	摘　　要
2）給水部　D～E					
給水管　φ100	121.0	m	160.0	19,360.0	110 m×1.1
レデューサー　φ125 →100 伏設手間	1	ヶ	260.0 82.3	260.0 82.0	γ-1
ベンド　φ100 伏設手間	1	〃	250.0 65.9	250.0 66.0	
給水栓　φ80	5	ヶ所	7,571.6	37,858.0	単　No.22-4
小　　計				57,876.0	
3）給水部E～F					
給水管　φ75	77.0	m	112.5	8,663.0	70m×1.1
レデューサー　φ100 →75 伏設手間	1	ヶ	200.0 65.9	200.0 66.0	γ-2
給水栓　φ65	3	ヶ所	5,548.6	16,646.0	単　No.22-3
排泥管　φ75	31.5	m	90.0	2,835.0	30m×1.05
排泥栓	1	ヶ所	5,345.9	5,346.0	単　No.23-3
小　　計				33,756.0	
4）給水部　A～B					
給水管　φ75	170.5	m	112.5	19,181.0	155 m×1.1
ベンド　φ75 伏設手間	1	ヶ	120.0 49.5	120.0 50.0	b-5
給水栓　φ65	7	ヶ所	5,345.9	37,421.0	単　No.22-3
小　　計				56,772.0	
5）給水部　B～C					
給水管　φ65	93.5	m	90.0	8,415.0	8.5 m× 1.1
レデューサー　φ75→65 伏設手間	1	ヶ	180.0 49.5	180.0 50.0	γ-3

項　　目	員　数	単位	単価区	金額区	摘　　要
給水栓　φ50	4	ヶ所	3,618.6	14,474.0	単　No.22-2
排泥管　φ65	31.5	m	90.0	2,835.0	30×1.05
排泥栓　φ65	1	ヶ所	4,333.9	4,334.0	単　No.23-2
小　　計				30,288.0	
6）給水部　K～L					
給水管　φ50	176.0	m	60.0	10,560.0	160　×1.1
給水栓　φ25	9	ヶ所	1,577.6	14,198.0	単　No.22-1
排泥管　φ50	31.5	m	60.0	1,890.0	30×1.05
排泥栓　φ50	1	ヶ所	3,666.9	3,667.0	単　No.23-1
小　　計				30,315.0	
中　計（配管工事計）				441,727.0	
2．管伏設工 1,538m（Steel 部 510m, PVC部 938m, 90m）					
機械掘削	984.3	㎡	22.7	22,344.0	0.64㎡×1,538
埋戻し（機械）	787.4	〃	12.8	10,079.0	984.3 ㎡×0.8
〃　（人力）	196.9	〃	50.3	9,904.0	1984.3㎡×0.2
管伏設（Steel）	510.0	m	29.3	14,943.0	
〃　（PVC）	1,028.0	〃	11.0	11,308.0	
小　　計				68,578.0	
3．吸水管伏設					
吸水管（Steel）φ80	100	m	1,161/6	19,350.0	
ふとん篭　Ⅰ型	111	枚	2,234.7	247,974.0	100m÷0.9=111
結束線	555	kg	25.0	13,875.0	5kg／枚

項　　目	員　数	単位	単価 ß	金額 ß	摘　　要
管伏設	100	m	29.3	2,930.0	
小　　計				284,129.0	
4．付帯施設					
4-1. 水槽					
掘削	56.8	㎥	75.2	4,271.0	
コンクリート	28.6	〃	1,471.5	42,085.0	単　No. 9
コンクリート	4.1	〃	1,161.6	4,763.0	単　No.11
基礎栗石	8.2	〃	586.3	4,808.0	
鉄筋	2,458.0	kg	20.7	50,881.0	
型枠	128.8	㎡	278.6	35,884.0	
揚水管　立上がり部　φ80	4.0	m	1,161/6	774.0	
〃　エルボー　φ80	3	ヶ	140.0	420.0	
〃　サポート	4	〃	200.0	800.0	
ステップ	15	段	100.0	1,500.0	
配水管ｽﾙｰｽ・ﾊﾞﾙﾌﾞ　φ125 伏設手間	1	ヶ	8,000.0 213.4	8,000.0 213.0	
排泥管ｽﾄｯﾌﾟ・ﾊﾞﾙﾌﾞ　φ100 伏設手間	1	〃	8,000.0 200.4	8,000.0 200.0	
排泥直管　(PVC)　φ100	1	m	160.0	160.0	
小　　計				162,759.0	
4-2. ポンプ小屋	1	式		156,000.0	
4-3. 揚水ポンプ					
1）ポンプ 0.27㎥/min×36m×3,000min^{-1}×3.7kw	1	台		77,000.0	

乙

項　　目	員　数	単位	単価 ₿	金額 ₿	摘　　要
2）チェックバルブ　φ50	1	ヶ	2,000.0	2,000.0	
スルースバルブ　φ50	1	〃	3,500.0	3,500.0	
レデューサー　50→80	2	〃	250.0	500.0	
ストレーナー	1	〃	5,800.0	5,800.0	5口mm
フートバルブ	1	〃	500.0	500.0	
3）制御盤（含電極）	1	式	8,800.0	8,800.0	
4）電源・電極制御用配線材 1.5mm² 3×550 m cable	1	〃		52,000.0	
同上保護パイプ steel φ25	550.0	〃	60.0	33,000.0	galvanized
5）据付労務費・試運転費				15,000.0	
小　　計				198,100.0	
計（付帯施設計）				516,859.0	
合　　計				1,311,293.0	

甲

第７号　　建　築　工　事　費　内　訳　明　細　書

（含敷地造成工）

金　3，452，000区

内　　訳

項　　目	員　数	単位	単価区	金額区	摘　　要
1．建築工事					
試験室	1	式		1，085，000．0	
計測室ならびに貯蔵庫	1	〃		1，300，000．0	
車庫	1	〃		158，000．0	
小　　計				2，543，000．0	
諸　経　費	20	％		509，000．0	
計				3，052，000．0	
2．乾燥場　18m×12m					
鉄筋φ6㎜/m，12 m×90本	251．7	kg	20．7	5，210．0	2．22kg/10m×1．05
〃　18 m×60本	251．7	〃	20．7	5，210．0	
コンクリート	21．6	㎥	1，471．5	31，784．0	
型枠	6．0	㎡	278．6	1，672．0	
基礎栗石	21．6	㎥	586．3	12，664．0	
小　　計				56，540．0	
諸　経　費	25	％		14，135．0	
計				70，675．0	
			≒	71，000．0	

項　　目	員　数	単位	単価区	金額区	摘　　要
3．建物敷地整備工					
1）敷地周辺掘削，敷均し	2,775.0	㎡	31.2	86,580.0	掘削18.4 敷均12.8 } 31.2
2）道路敷床堀，敷均し	819.0	〃	29.2	23,915.0	掘削16.4 敷均12.8 } 29.2
3）運搬盛土					
掘削積込み	1,269.0	㎥	39.4	49,999.0	
運搬	1,813.0	〃	25.7	46,594.0	1,269÷0.7=1,813 D=200 m
敷均し	1,813.0	〃	12.8	23,206.0	
転圧	1,813.0	〃	12.3	22,300.0	
4）横断暗渠					
コンクリートパイプ	20	本	250.0	5,000.0	2列 φ500，ℓ1.0
同　伏設	1	式		4,400.0	1日ｸﾚｰﾝ損料　¥3,000 配管工2人×250=500 人夫10人×90　=900
床コンクリート	0.6	㎥	1,345.9	808.0	
基礎栗石	0.7	〃	586.3	410.0	
小　計				263,212.0	
諸経費	25	%		65,803.0	
計				329,015.0	
			≒	329,000.0	
合　計				3,452,000.0	

(Form-1)

Application letter

(Date)

To : Mr. Nobuji ABE
Resident Representative
Japan International Cooperation Agency
Thailand Office

Re : Construction Work of the Demonstration Farm on the Agricultural Development research Project Phase II in North-East Thailand

Dear Sirs :

We have the pleasure of applying for participation in the prequalification of the captioned project under the Japan's Technical Cooperation to Thailand and of submitting for your review and acceptance one original and its photo copy of the required documents which are attached hereto.

We declare that the particulars attached herein are true and correct in every detail.

If you have any question, please feel free to contact us and we will be glad to reply to you our clarification of the matter.

Yours faithfully,
Suvalee Co, Ltd.
(Contractor's name)

(Signature) _____
(Name in Print) Tanom Kriengtaweekit
(Capacity) Executive Director
(Section)

cc. Nippon Giken Inc.

(Form-2)

Company description

Company Name : SUVALEE CO,LTD.

1. Company (Name, President, Address, Phone, Telex, Fax)
   Suvalee Co,Ltd, Mr. Sutin Prasertchaiwanit 11/3 Moo 1 Sukhomvit Rd, Muang, Chonburi 20000 Tel (038) 275334-8, Fax (038) 274337
2. Authorized capital and paid-in capital
   Authurized Capital Baht 70,000,000.-
3. Financial Statement (last 3 years)

year	Owned Capital (A) Baht	Profit after taxes (B) Baht	(B)/(A) percent
19 89	83,099,005	3,214,937	3.87 %
19 88	79,884,068	2,455,217	3.07 %
19 87	77,428,850	1,682,572	2.17 %

4. Number of Staff (regular staff only) on hand

	Total	No. of staff who has a good command of English	No. of staff who will be engaged for the Project	
			at Site	at H/Q
Engineers :				
Civil	5	5	1	1
Architect	-	-	-	-
Mechanical	1	1	-	1
Electrical	-	-	-	-
Others	-	-	-	-
Administrative :	15	3	1	1
Others : Foreman	25	10	2	-
Total :	46	19	4	3

(Sub contractor's Staff at site should not be included)

5. Number of the Construction Equipment retained (Bulldozer, Back-hoe, etc.)

Kind of Equipment	Type	Capacity	Remark
1. Bulldozer	CaterpillarD5	168 H.P.	1 Set
2. Back Hoe	Komutsu PC200	0.8 -1.0 M^3	1 Set
3. Grader	Caterpillar 140G	135 H.P.	1 Set
4. Steel Roller	Sakai SV 90	10 Tons	1 Set

(Form-3)

Annual amount of completed construction work(s) in Thailand and abroad for five (5) years.

Company Name : SUVALEE CO,LTD

Year	Thailand		Abroad		Total	
	Number of project	Amount Baht	Number of project	Amount Converted into Baht	Number of project	Amount Baht
1989	13	120,771,775	-	-	13	120,771,775
1988	15	116,106,879	-	-	15	116,106,879
1987	8	76,869,045	-	-	8	76,869,045
1986	10	70,565,000	-	-	10	70,565,000
1985	6	91,786,614	-	-	6	91,786,614
Average	10.4	95,219,862	-	-	10.4	95,219,862

(Form-4)

Experience of similar construction work(s) in Thailand and abroad completed and/or on-going for the last five (5) years.

Company Name : SUVALEE,CO,LTD

Year	Thailand		Abroad		Remarks	
	Number of project	Amount Baht	Number of project	Amount Converted into Baht	Kind of Project	
1989	13	120,771,775	-	-		
1988	15	116,106,879	-	-		
1987	8	76,869,045	-	-		
1986	10	70,565,000	-	-		
1985	6	91,786,614	-	-		
Average	10.4	95,219,862	-	-		

(Form-5)

Experience in civil work(s) completed and/or on-going in Thailand and the other countries for the last five (5) years

Company Name : SUVALEE CO, LTD.

Country	Project Name	Client	Location	Completed in month, year	Contract Amount (Baht)	Description of work
THAILAND	HIGHWAY ROUTE 3245.	DEPT. OF HIGHWAYS	CHONBURI PROVINCE	JUNE, 1991	70,033,867	ROAD WORK DRAINAGE WORK
THAILAND	IRRIGATION CANAL SYSTEM	DEPT.OF IRRIGATION	NAN PROVINCE	JULY,1991	47,976,550	IRRIGATION CANAL
THAILAND	ROJANA INDUSTRIAL PARK	HAZAMA THAILAND	AYUDHYA PROVINCE	DECEMBER.1990	28.000.000	ROAD WORK.DAM PRAINAGE WORK.PIPELINE

* In case of the experience of the J/V contract, the percentage of portion should be indicated following the contract amount.

(Form-6)

Experience in building work(s) completed and/or on-going in Thailand and the other countries for the last five (5) years

Company Name : SUVALEE CO. LTD

Country	Project Name	Client	Location	Completed in month, year	Contract Amount (Baht)	Description of work
THAILAND	TRAINING CENTER OF HIGHWAY DEPARTMENT	DEPT. HIGHWAY	SRIRACHA, CHONBURI	UNDER CONSTRUCTION 40% COMPLETED	62,932,027	-
THAILAND	16- UNIT CONDOMINIUM	DEPT. OF HIGHWAY	SRIRACHA, CHONBURI	UNDER CONSTRUCTION 90% COMPLETED	7,260,948	-

* In case of the experience of the J/V contract, the percentage of portion should be indicated following the contract amount.

(Form-1)

Application letter

(Date)

To : Mr. Tsutomu Saito
Resident Representative
Japan International Cooperation Agency
Thailand Office

Re : Construction Work of the Demonstration Farm on the Agricultural Development research Project Phase II in North-East Thailand

Dear Sirs :

We have the pleasure of applying for participation in the prequalification of the captioned project under the Japan's Technical Cooperation to Thailand and of submitting for your review and acceptance one original and its photo copy of the required documents which are attached hereto.

We declare that the particulars attached herein are true and correct in every detail.

If you have any question, please feel free to contact us and we will be glad to reply to you our clarification of the matter.

Yours faithfully,

(Contractor's name)

(Signature) Chaivat Wathanakul

(Name in Print) Mr.Chauvat Wathanakul

(Capacity) Manager

(Section) Section 3

cc. Nippon Giken Inc.

Company description

1. Company Name : Khon Kaen Vissavaphan

   President : Mr. Chaiwat Wathanakul

   Address : 425-427 Thaparug Road

   Amphur Muang

   Khon Kaen

   Telephone : (043) 236104 , 238775

2. Authorized capital and paid-in capital 授权 3.000.000 บาท

   Mr. Chaiwat Wathanakul

3. Financial Statement

   1989 Cash account the Siam Commercial Bank , LTD 187 , 274 baht

   1990 Current A/C inkiung Thai Bank Credit 5,000,000 baht *

   1991 Cash account in Bankok Bank Mahasarakam 500,000 baht

4. Number of Staff

Engineers : Civil	: 1.	Mr. Chawalit	Wathanakul
	2.	Mr. Reanchai	Wathanakul
Administrative	: 3.	Mr. Chaiwat	Wathanakul
Others	: 4.	Mr. Sittipon	Gingsangval
	5.	Mr. Piti	Piyasil
Worker	: 60		
Total	: 65		

5. Number of the Construction Equipment retained

Kind of Equipment	Type	Capacity	Remark
Back - hoe	Komassu PC 200	-	2 Back-hoe
Grader	Komassu D 7 S	-	1

* Usually we use my owned cash

(Form - 3)

Company Name : Khon Kaen Vissavanhan Thailand

	Year	Number of project	Amount(Baht)
1.	1990	Bridge Construction Amphur Puphaman Khon Kaen	788,000
2.	1990	Bridge Construction Amphur Chumpae Khon Kaen	769,000
3.	1990	Governer housing Construction Amphur Muang Khon Kaen	490,000
4,	1988	Deeper Water reservoir Amphur Phagun Khan Kaen	1,492,711
5,	1988	Water drainage beside runway Khon Kaen Airport	923,000
6,	1987	Governer housing construction	262,000
7.	1987	Governer housing construction Loei	2,040,000
8.	1987	Hospital construction Loei	3,500,000
9.	1983	School Construction Amphur Wang-sa-phung	1,980,000
10,	1991	Bridge Construction Amphur Banphaeng Khon Kaen.	458,140

Remark *

This form we added construction works and civil works

We have another construction doesn't record in this

ใบอนุญาตเป็นผู้ประกอบวิชาชีพวิศวกรรมควบคุม



ลายมือชื่อผู้ได้รับอนุญาต

คณะกรรมการสอบคุมการประกอบวิชาชีพวิศวกรรม
ตามพระราชบัญญัติวิชาชีพวิศวกรรม พ.ศ. ๒๕๐๕
อนุญาตให้
นายชวลิต วัฒนกูล
ประกอบวิชาชีพวิศวกรรมควบคุม ประเภท ภาคี วิศวกร
สาขาวิศวกรรม โยธา
ตั้งแต่วันที่ ๑๘ มิถุนายน ๒๕๓๐
ถึงวันที่ ๑๗ มิถุนายน ๒๕๓๕

เลขทะเบียน ภย.๔๑๔๗
จ.ศ.๔

นายทะเบียน ก.ว.

PROPOSAL

To : Mr. Nobuji ABE
The Resident Representative
Japan International Cooperation Agency, Thailand Office
1674/1, New Petchburi Road, Bangkok 10310

P-01 BILL OF QUANTITIES AND BID PRICES

The undersigned Bidder having carefully examined in their entirety the Contract Documents for the Construction Work of The Demonstration Farm on the Agricultural Development Research Project Phase II, hereby offers and proposes to perform all of the construction and services, to furnish all equipments, materials, supplies, labor and other items described in the Contract Documents, all for the unit or lump sum prices stated in words and figures in the following Quantities :

7,400,000

SEVEN MILLION FOUR HUNDRED THOUSAND BAHT ONLY

Total Price of Estimated Cost
(in words and figures)

- Bill of Quantities to be attached herein -

P-02 GUARANTEE OF COMPLETION

The undersigned Bidder guarantees to effect the commencement, prosecution and completion of the Contract Works.

P-03 BID SECURITY

The undersigned Bidder hereby certifies that all statements herein are made on behalf of (Firm's Name) SUVALEE CO, LTD. ;

Dated this 5 day of SEPTEMBER , 19 .

Name TANOM KRIENGTAWEEKIT

Title EXECUTIVE DIRECTOR

Firm's Name SUVALEE CO, LTD.

Firm's Address 11/3 MOO 1 SUKHOMVIT RD.

MUANG CHONBURI 20000

Witness

SUMMED UP TABLE OF ESTIMATED COST
FOR EACH CONSTRUCTION ITEMS

	Estimated Cost (฿)
I. Direct Cost	
[1] Reservoir	403072
[2] Drainage Canals	954176
[3] Farm Roads	1388184
[4] Finishing of Field	180000
[5] Irrigation Facilities	1491221
[6] Run-off Plots. Does not include this time, but to be added later.	××××××××××××
[7] Buildings	
1. Field Laboratory	932500
2. Survey and Storage House	1043500
3. Machinary Store House	135038
4. Dry Yard	83325
5. Arrangement of Building Site	28435
Sub-total	6896551
II. Indirect Cost Tax 7.3	503449
Grand Total	7400000

BILL OF QUANTITIES

Description	Unit	Quantity	Unit Price(฿)	Cost(฿)	Remark
[1] Reservoir					
1. Excavating and Transportation					
1-1 Excavating ~~and Pushing~~ for dike (1st)	cum	1950.0 ~~5270.0~~	40 calculated in farm road	78000	Around the reservoir
1-2 Excavating and Transporting (1st)	cum	760.4 ~~7000.0~~	60	45,624	To the field D=550m
1-3 Excavation and Transporting (2nd)	cum	3,303.0 ~~8988.0~~	60	198180	To the yard D=550m
1-4 Spreading in Spoil-bank	cum	4,063.4 ~~21258.0~~	20	81268	
Sub-total				403072 ฿	
2. Dam Work					
2-1 Banking and Compacting	cum	1726.0			
2-2 Protecting Face of Slpoe	sqm	1038.0			
Sub-total					
3. Spillway					
3-1 Concrete	cum	146.0			210kg/m
3-2 Wooden Form	sqm	274.0			
3-3 Iron Bar	kg	5097.4			Deformed
3-4 Gate Board etc.	set	1			
3-5 Wire Box for Gabionade I	pc	29			Type I
3-6 Pump Drainage	day				

Cancelled

(continued)

Description	Unit	Quantity	Unit Price(฿)	Cost(฿)	Remark
~~Sub-total~~				×××××××	
Total					
[2] Drainage Canal					
1. Main Canal L 390m					B-line
1-1 Excavating	cum	2031.3	40	81252	
1-2 Smoothing Face of Slope	sqm	1683.6	10	16836	
1-3 Protecting Face of Slope	sqm	780.0	80	62400	
1-4 Wire Box for Gabionade I	pc	49	2200	107800	Type I
1-5 Wire Box for Gabionade II	pc	69	2500	172500	Type II
Sub-total				440788	
2. Branch Drainage Canal L 186m					D-line
2-1 Excavating	cum	128.3	40	5132	
2-2 Smoothing Face of Slope	sqm	401.4	10	4014	
2-3 Protecting Face of Slope	sqm	372.0	80	29760	
2-4 Wire Box for Gabionade I	pc	13	2200	28600	Type I
Sub-total				67506	
3. Branch Drainage Canal L 165m					A-line
3-1 Excavating	cum	211.6	40	8464	
3-2 Smoothing Face of Slope	sqm	484.2	10	4842	

(continued)

Description	Unit	Quantity	Unit Price(฿)	Cost(฿)	Remark
3-3 Protecting Face of Slope	sqm	330.0	80	26400	
3-4 Wire Box for Gabionade I	pc	29	2200	63800	Type I
Sub-total				103506	
4. Branch Drainage Canal L 185m					E-line
4-1 Excavating	cum	125.6	40	5024	
4-2 Smoothing Face of Slope	sqm	447.3	10	4473	
4-3 Protecting Face of Slope	sqm	370.0	80	29600	
4-4 Wire Box for Gabionade I	pc	5	2200	11000	Type I
Sub-total				50097	
5. Branch Drainage Canal L 155m					So-2-line
5-1 Excavating	cum	111.6	40	4464	
5-2 Smoothing Face of Slope	sqm	390.6	10	3906	
5-3 Protecting Face of Slope	sqm	310.0	80	24800	
Sub-total				33170	
6. West-side Drainage Canal L ~~419m~~ 400					C-line
6-1 Excavating	cum	~~588.1~~ 554.6	40	22184	
6-2 Smoothing Face of Slope	sqm	~~1311.5~~ 1242.5	10	12420	
6-3 Protecting Face of Slope	sqm	~~838.0~~ 800.0	80	64000	
6-4 Wire Box for Gabionade I	pc	~~24~~ 23	2200	160600	Type I { for drainage 17 / for foot-protection of dam 56
Sub-total				259209	

(continued)

Description	Unit	Quantity	Unit Price(β)	Cost(β)	Remark
Total					
[3] Farm Road					
1. Main Road L434m, W5m					A-Line
1-1 Excavating and removing of Top-soil	cum	3320.1	40	132804	depth 0.30m, D=20m
1-2 Embankment of Sub-soil	cum	2083.2	80	166656	thickness 0.60m, D=20m
1-3 Turning back of Top-soil	cum	3320.1	20	66402	D=20m
1-4 Compacting by Tire Roller	cum	2083.2	30	62496	D=20m
1-5 Arrangement of Road Face	sq m	3472.0	5	17360	
1-6 Pavement by Laterite	cum	173.6	120	20832	
1-7. Protecting of Slop	sq m	868.0	15	13020	sod facing
Sub-total				479570	
2. Branch Road L895m, W4m					D, E, F, G. -Line
2-1 Excavating and removing of Top-soil	cum	4286.4	40	171456	depth 0.30m, D=20m
2-2 Embankment of Sub-soil	cum	1950 2667	80 80	156000 165360	thickness 0.60m, D=20m
2-3 Turning back of Top-soil	cum	4286.4	20	85728	D=20m
2-4 Compacting by Tire Roller	cum	4617.0	30	138210	D=20m
2-5 Arrangement of Road Face	sq m	5563.0	5	27815	
2-6 Pavement by Laterite	cum	442.1	120	53040	
2-7 Protecting of Slop	sq m	1790	15	26850	sod facing
Sub-total				824459	

(continued)

Description		Unit	Quantity	Unit Price(₱)	Cost(₱)	Remark
3. Cancelled	~~Sub-total~~				xxxxxxx	
4. Crossover of Canal, ~~5~~ 4 places						
4-1 Concrete (lean mixed)		cum	17.2	1700	29240	135kg/m
4-2 Cobble Stones for Bed		cum	69.1	650	44915	
4-3 Wire Box for Gabionade I		pc	4	2500	10,000	Type I
	Sub-total				84155	
	Total				1388184	
[4] Finishing of Field		sqm	60000.0	3	180000	
	Total				180000	
[5] Irrigation Facilities						
1. Pipe Arrangement						
1-1 Pumping up Line						
~~Draft Hose~~	~~ϕ80 flexible~~	~~m~~	~~26.3~~	xxx	xxxxxxxx	~~25x1.05~~
Pumping up Pipe	ϕ80 steel	m	~~525.5~~ ~~550.5~~ 510 ~~530~~	260	139230	~~530~~x1.05
Dresser	ϕ80	pc	3	400	1200	
Coupling	ϕ80	pc	100	300	30000	
Bend	ϕ80	pc	3	300	900	
	Sub-total				171330 ₱	

(continued)

Description		Unit	Quantity	Unit Price(₱)	Cost(₱)	Remark
1-2 Distributing Line, PVC pipe						
1) Distributing Pipe	ϕ125	m	157.5	380	59850	150X1.05
-ditto-	ϕ125	m	126.0	380	47880	120X1.05
-ditto-	ϕ 75	m	94.5	150	14175	90X1.05
Tee	125→50	pc	1	1000	1000	t-1
-ditto-	125→75	pc	1	1000	1000	t-2
Bend	ϕ125	pc	1	800	800	b-2
-ditto-	ϕ 75	pc	1	200	200	b-3
-ditto-	ϕ 50	pc	1	100	100	b-6
	Sub-total				125005 ₱	
2) Water-supply Distric, D-E						
Water-supply Pipe	ϕ100	m	121.0	250	30250	110X1.1
Reducer	125→100	pc	1	1000	1000	r-1
Bend	ϕ100	pc	1	400	400	
Water-supply Valve		pt	5	11500	57500	AngleValve ϕ80
	Sub-total				89150 ₱	
3) Water-supply District, E→F						
Water-supply Pipe	ϕ 75	m	99.0	150	14850	90X1.1
Reducer	100→75	pc	1	500	500	r-2
Water-supply Valve		pt	3	8000	24000	AngleValve ϕ65

(continued)

Description	Unit	Quantity	Unit Price(₱)	Cost(₱)	Remark
Sand-flash Pipe ϕ 75	m	31.5	150	4725	30X1.05
Sand-flash Valve	pt	1	7000	7000	StopValve ϕ75
Sub-total				51075 ₱	
4) Water-supply District, A-B					
Water-supply Pipe ϕ 75	m	170.5	150	25575	155X1.1
Bend ϕ 75	pc	1	200	200	b-5
Water-supply Valve	pt	7	7500	52500	AngleValve ϕ65
Sub-total				78275 ₱	
5) Water-supply District, B-C					
Water-supply Pipe ϕ 65	m	93.5	110	10285	85X1.1
Reducer 75→65	pc	1	300	300	r-3
Water-supply Valve	pt	4	7000	28000	AngleValve ϕ50
Sand-flash Pipe ϕ 65	m	31.5	1000	31500	30X1.05
Sand-flash Valve	pt	1	7000	7000	StopValve ϕ65
Sub-total				77085 ₱	

(continued)

Description	Unit	Quantity	Unit Price(₱)	Cost(₱)	Remark
6) Water-supply District, K-L					
Water-supply Pipe ϕ 50	m	176.0	70	12320	160X1.1
Water-supply Valve	pt	9	5000	45000	AngleValve ϕ25
Sand-flash Pipe ϕ 50	m	31.5	70	2205	30X1.05
Sand-flash Valve	pt	1	5000	5000	StopValve ϕ50
Sub-total				64525	
Middle-total 1-1,2					
2. Pipe Setting, L 1580m					
2-1 Excavating	cum	1011.2	30	30336	
2-2 Back-hilling	cum	1011.2	30	30336	
2-3 Setting (steel)	m	~~530.0~~ 510.0	30	15300	
-ditto- (PVC)	m	1050.0	15	15750	
Sub-total				91722	
~~3~~. Other Facilities					
~~3~~-1 Water Tank					
Excavating	cum	56.8	30	1704	
Concrete	cum	28.5	2000	57000	210kg/m³
Concrete	cum	4.1	1700	6970	135kg/m³
Iron Bar	kg	2458.0	25	61450	Normal

insert next page 9-7 ⟶

(continued)

Description	Unit	Quantity	Unit Price(₱)	Cost(₱)	Remark
3. Setting of Suction Pipe					
suction Pipe	m	100.0	260	26000	Steel, ϕ80
Wire Box for Gabionade I	pc	111	2200	244200	
Binding Wire	kg	555	30	16650	5 kg/pc
Pipe Setting	m	100	30	3000	
Sub-total				289850	

(continued)

Description	Unit	Quantity	Unit Price(β)	Cost(β)	Remark
Wooden Form	sqm	128.8	350	45080	
Pipe, Step, Valve, etc.	set	1	2000	2000	
Sub-total				174204	
43-2 Pump House	house	1		70000	
Sub-total				70000	
43-3 Water Pump					
① Pump 0.27m/min×36m×3000min^{-1}×3.7kw	set	1		150000	
② Check Valve, Sluice Valve, Reducer, Strainer, Foot Valve, etc.	set	1		20000	
③ Control Panel, Controller, Electrodes with Holder, etc.	set	1		20000	
④ Wire for Remote Control (with cover pipe) steel pipe	m	~~600.0~~ 550.0		10000	1.5 4m²
⑤ Setting and Testing labours' cost	~~man~~ md			10000	galvanized
Sub-total				210000	
Middle-total 3-1, 2, 3				1492221	
Total					

(continued)

Description	Unit	Quantity	Unit Price(฿)	Cost(฿)	Remark
[6] Run-off Plot Does not include this time but to be added later.					
~~1. Foundation Work, Land Grading~~	~~sqm~~	~~6400.0~~			
~~2. Run-off Plot~~	~~set~~	~~18~~			
Total					
[7] Building					
1. Field Laboratory					
1-1 Temporary Work	round	1			
1-2 Earth Work	"	1			
1-3 Reinforced Concrete Work	"	1			
1-4 Steel Skelton Work	"	1			
1-5 Masonry Work	"	1			
1-6 Metal Work	"	1			
1-7 Plaster Work	"	1			
1-8 Roofing Work	"	1			
1-9 Joiner's Work	"	1			
1-10 Painting Work	"	1			
1-11 Interior Finishing Work	"	1			
1-12 Electric Work	"	1			
1-13 Plumbing and Sanitary Work	"	1			
Sub-total				932500 / 1	

(continued)

Description	Unit	Quantity	Unit Price(฿)	Cost(฿)	Remark
2. Survey and Storage House					
1-1 Temporary Work	round	1		----------	
1-2 Earth Work	"	1		----------	
1-3 Reinforced Concrete Work	"	1		----------	
1-4 Steel Skelton Work	"	1		----------	
1-5 Masonry Work	"	1		----------	
1-6 Metal Work	"	1		----------	
1-7 Plaster Work	"	1		----------	
1-8 Roofing Work	"	1		----------	
1-9 Joiner's Work	"	1		----------	
1-10 Painting Work	"	1		----------	
1-11 Electric Work	"	1		----------	
1-12 Plumbing and Sanitary Work	"	1		----------	
Sub-total				1043500	
3. Machinary Store Hause					
3-1 Temporary Work	round	1		----------	
3-2 Earth Work	"	1		----------	
3-3 Reinforced Concrete Work	"	1		----------	
3-4 Steel Skelton Work	"	1		----------	
3-5 Plaster Work	"	1		----------	
3-6 Roofing Work	"	1		----------	

(continued)

Description	Unit	Quantity	Unit Price(฿)	Cost(฿)	Remark
3-7 Electric Work	round	1			
	Sub-total			135038	
4. Dry Yard					
4-1 Concrete	cum	21.6	2500	54000	210kg/m
4-2 Iron Bar	kg	503.4	25	12585	
4-3 Wooden Form	sqm	6.0	450	2700	
4-4 Cobble Stones for Bed	cum	21.6	650	14040	
insert next page 13-1 ⟶	Sub-total			83325	
	Total				
	GRAND TOTAL				

(continued)

Description	Unit	Quantity	Unit Price(฿)	Cost(฿)	Remark
5. Arrangement of Building Site					
5-1 Excavating of Border	cu.m	2775	20	55500	ℓ = 370 m
5-2 Excavating of Road-bed	cu.m	819	40	32760	
Spreading	cu.m	819	20	16380	
5-3 Embankment by Transported Soil					
Excavating and Loading	cu.m	1267	40	50760	
Transporting	cu.m	1813	20	36260	1267 ÷ 0.7 = 1813
Spreading	cu.m	1813	20	36260	
Compacting by Tire Roller	cu.m	1813	20	36260	
5.4 Culvert across Road					
Concrete Pipe Ø500, ℓ1.0	pc	20	700	14000	
Setting	set	1	4000	4000	
Concrete	cu.m	0.6	3000	1800	
Cobble Stones for Bed	cu.m	0.7	650	455	
Sub-total				284435	

CONSTRUCTION SCHEDULE

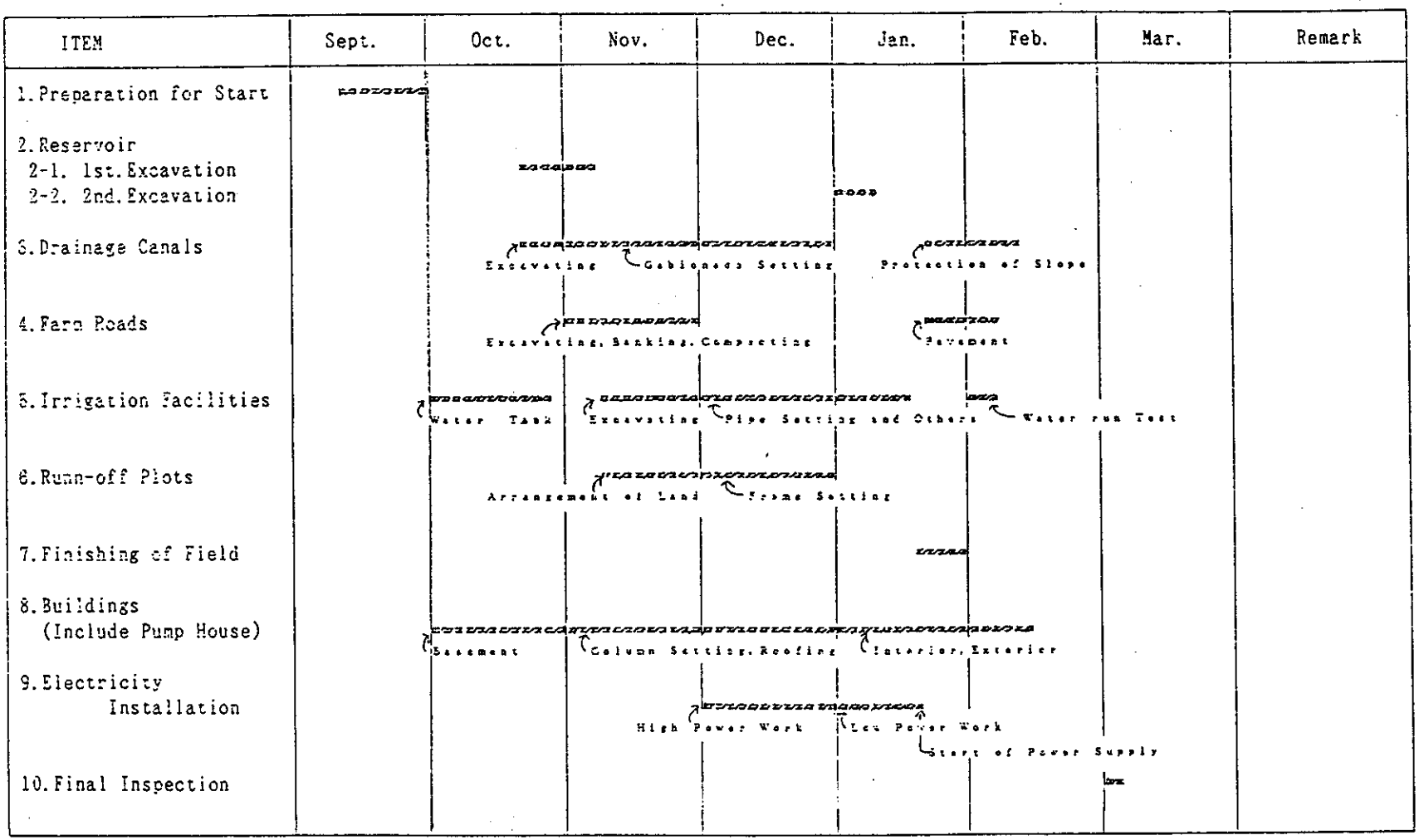

PROPOSAL

To : Mr. Nobuji ABE
The Resident Representative
Japan International Cooperation Agency, Thailand Office
1674/1, New Petchburi Road, Bangkok 10310

P-01 BILL OF QUANTITIES AND BID PRICES

The undersigned Bidder having carefully examined in their entirety the Contract Documents for the Construction Work of The Demonstration Farm on the Agricultural Development Research Project Phase II, hereby offers and proposes to perform all of the construction and services, to furnish all equipments, materials, supplies, labor and other items described in the Contract Documents, all for the unit or lump sum prices stated in words and figures in the following Quantities :

6,489,812 Bath

Six million four hundred eighty nine thousand and eight hundred twelve

Total Price of Estimated Cost
(in words and figures)

Chairat Wattanakall

- Bill of Quantities to be attached herein -

P-02 GUARANTEE OF COMPLETION

The undersigned Bidder guarantees to effect the commencement, prosecution and completion of the Contract Works.

P-03 BID SECURITY

The undersigned Bidder hereby certifies that all statements herein are made on behalf of (Firm's Name) Khon Kaen Visavaphan Lim. Partnership ;
Dated this 5th day of September, 1991.

Chairat Wattanakull

Name Chairat Wattanakull
Title Owner
Firm's Name Khon Kaen Visavaphan
Firm's Address 425-427 Taeparak Rd.
Amphur Mauang
Khon Kaen.

Witness

Sudarat Wattanakul

SUMMED UP TABLE OF ESTIMATED COST FOR EACH CONSTRUCTION ITEMS

	Estimated Cost (฿)	
I. Direct Cost		
[1] Reservoir	345,389	3625,500
[2] Drainage Canals	824,962	
[3] Farm Roads	1,343,949	
[4] Finishing of Field	180,000	
[5] Irrigation Facilities	931,200	
~~[6] Run-off Plots~~ Does not include this time, but to be added later	××××××××××××	
[7] Buildings		1760,236
1. Field Laboratory	569,000	
2. Survey and Storage House	619,717	
3. Machinary Store House	104,000	
4. Dry Yard	51,219	
5. Arrangement of Building Site	236,300	
Sub-total	5385,736	
II. Indirect Cost 1 Operating cost = 5% 2 Tax = 5% 3 Profit = 10.5% } =20.5%	1,104,076	
Grand Total	6,489,812 ฿	

chairat wattanakul

Description	Unit	Quantity	Unit Price(฿)	Cost(฿)	Remark
[1] Reservoir					
1. Excavating and Transportation					
1-1 Excavating ~~and Pushing~~ for dike (1st)	cum	~~5270.0~~ 1950.0	×××	calculated in farm road ×××××××	Around the reservoir
1-2 Excavating and Transporting (1st)	cum	~~7000.0~~ 760.*	35	26,614	To the field D=550m
1-3 Excavation and Transporting (2nd)	cum	~~8988.0~~ 33030	35	115,605	To the yard D=550m
1-4 Spreading in Spoil-bank	cum	~~21258.0~~ 4063.*	50	203,170	
Sub-total				[345,389]	
2. Dam Work					
2-1 Banking and Compacting	cum	1726.0	____	____	
2-2 Protecting Face of Slpoe	sqm	1038.0	____	____	
Sub-total				____	
3. Spillway					
3-1 Concrete	cum	146.0	____	____	210kg/㎠
3-2 Wooden Form	sqm	274.0	____	____	
3-3 Iron Bar	kg	5097.4	____	____	Deformed
3-4 Gate Board etc.	set	1	____	____	
3-5 Wire Box for Gabionade 1	pc	29	____	____	Type I
3-6 Pump Drainage	day		____	____	

Cancelled

(continued)

Description	Unit	Quantity	Unit Price(฿)	Cost(฿)	Remark
~~Sub-total~~				×××××××	
Total				[345,389]	
[2] Drainage Canal					
1. Main Canal L 390m					B-line
1-1 Excavating	cum	2031.3	30	60,939	
1-2 Smoothing Face of Slope	sqm	1683.6	20	33,672	
1-3 Protecting Face of Slope	sqm	780.0	50	39,000	
1-4 Wire Box for Gabionade I	pc	49	1500	73,500	Type I
1-5 Wire Box for Gabionade II	pc	69	1,500	103,500	Type II
Sub-total				[310,611]	
2. Branch Drainage Canal L 186m					D-line
2-1 Excavating	cum	128.3	30	3489	
2-2 Smoothing Face of Slope	sqm	401.4	20	8,028	
2-3 Protecting Face of Slope	sqm	372.0	50	18,600	
2-4 Wire Box for Gabionade I	pc	13	1,500	19,500	Type I
Sub-total				[49,617]	
3. Branch Drainage Canal L 165m					A-line
3-1 Excavating	cum	211.6	30	6348	
3-2 Smoothing Face of Slope	sqm	484.2	20	9684	

(continued)

Description	Unit	Quantity	Unit Price(฿)	Cost(฿)	Remark
3-3 Protecting Face of Slope	sqm	330.0	200	66,000	
✱ 3-4 Wire Box for Gabionade I	pc	29	1,500	43,500	Type I
Sub-total				[125,532]	
4. Branch Drainage Canal L 185m					E-line
4-1 Excavating	cum	125.6	30	3768	
4-2 Smoothing Face of Slope	sqm	447.3	20	8946	
4-3 Protecting Face of Slope	sqm	370.0	50	18,500	
4-4 Wire Box for Gabionade I	pc	5	1,500	7,500	Type I
Sub-total				[38,714]	
5. Branch Drainage Canal L 155m					So-2-line
5-1 Excavating	cum	111.6	30	3348	
5-2 Smoothing Face of Slope	sqm	390.6	20	7,812	
5-3 Protecting Face of Slope	sqm	310.0	50	15,500	
Sub-total				[26660]	
6. West-side Drainage Canal L ~~419m~~ 400					C-line
6-1 Excavating	cum	~~588.1~~ 554.6	30	16638	
6-2 Smoothing Face of Slope	sqm	~~1311.6~~ 1242.5	20	24,850	
6-3 Protecting Face of Slope	sqm	~~838.0~~ 800.0	50	40,000	
6-4 Wire Box for Gabionade I	pc	~~24~~ 23	3,000	29,000	Type I { for drainage 17 / for foot-protection of dam 56
Sub-total				[309,488]	

(continued)

Description	Unit	Quantity	Unit Price(₱)	Cost(₱)	Remark
Total					
[3] Farm Road					
1. Main Road L 434m, W5m					A-Line
1-1 Excavating and removing of Top-soil	cum	3320.1	50	166,005	depth 0.30 m, D=20m
1-2 Embankment of Sub-soil	cum	2083.2	50	104,160	thickness 0.60m, D=20m
1-3 Turning back of Top-soil	cum	3320.1	20	66,402	D=20m
1-4 Compacting by Tire Roller	cum	2083.2	20	41,664	D=20m
1-5 Arrangement of Road Face	sq m	3472.0	10	34,720	
1-6 Pavement by Laterite	cum	1736	100	173,60	
1-7 Protecting of Slop	sq m	868.0	50	43,400	sod facing
Sub-total				[473,711]	
2. Branch Road L 895m, W 4m					D, E, F, G. -Line
2-1 Excavating and removing of Top-soil	cum	4286.4	50	214,320	depth 0.30m, D=20m
2-2 Embankment of Sub-soil	cum	1950 2667	50	236,850	Thickness 0.60m, D=20m
2-3 Turning back of Top-soil	cum	4286.4	20	85728	D=20m
2-4 Compacting by Tire Roller	cum	4617.0	20	92,340	D=20m
2-5 Arrangement of Road Face	sq m	5.563.0	10	55,630	
2-6 Pavement by Laterite	cum	442.1	100	44,200	
2-7 Protecting of Slop	sq m	1790	50	89,500	sod facing
Sub-total				[818,568]	

(continued)

Description		Unit	Quantity	Unit Price(฿)	Cost(฿)	Remark
3. Cancelled	~~Sub-total~~				xxxxxxx	
4. Crossover of Canal, 4 places						
4-1 Concrete (lean mixed)		cum	17.2	1,600	27,520	135kg/m
4-2 Cobble Stones for Bed		cum	69.1	350	24,150	
4-3 Wire Box for Gabionade II		pc	4	1,500	6,000	Type II
	Sub-total				[57,670]	
	Total				[1,343,949]	
[4] Finishing of Field		sqm	60,000.0	฿	[180,000]	
	Total				[180,000]	
[5] Irrigation Facilities						
1. Pipe Arrangement						
1-1 Pumping up Line						
~~Draft Hose~~	~~ϕ80 flexible~~	~~m~~	~~26.3~~	xxx	xxxxxxx	~~25x1.05~~
Pumping up Pipe	ϕ80 steel	m	~~5.5.5.5=100pc~~ ~~550.5~~	1150	10,500	510 ~~530~~x1.05
Dresser	ϕ80 "	pc	3	200	600	
Coupling	ϕ80 "	pc	100	100	10,000	
Bend	ϕ80 "	pc	3	150	450	
	Sub-total				[11,550]	

(continued)

Description		Unit	Quantity	Unit Price(฿)	Cost(฿)	Remark
1-2 Distributing Line, PVC pipe						
1) Distributing Pipe	ϕ125	m	157.5	1500	60,000	150X1.05
-ditto-	ϕ125	m	126.0	1500	48,000	120X1.05
-ditto-	ϕ 75	m	94.5	700	16,800	90X1.05
Tee	125→50	pc	1	225	225	t-1
-ditto-	125→75	pc	1	225	225	t-2
Bend	ϕ125	pc	1	1500	1,500	b-2
-ditto-	ϕ 75	pc	1	150	150	b-3
-ditto-	ϕ 50	pc	1	150	150	b-6
	Sub-total				[127,050]	
2) Water-supply Distric, D-E						
Water-supply Pipe	ϕ100	m	121.0	965	18,950	110X1.1
Reducer	125→100	pc	1	100	100	r-1
Bend	ϕ100	pc	1	100	100	
Water-supply Valve		pt	5	1,200	6,000	AngleValve ϕ80
	Sub-total				[35,150]	
3) Water-supply District, E→F						
Water-supply Pipe	ϕ 75	m	99.0	600	15,000	90X1.1
Reducer	100→75	pc	1	60	60	r-2
Water-supply Valve		pt	3	1,200	3,600	AngleValve ϕ65

(continued)

Description	Unit	Quantity	Unit Price(₿)	Cost(₿)	Remark
Sand-flash Pipe ϕ 75	m	31.5	900	6,300	30X1.05
Sand-flash Valve	pt	1	1,000	1,000	StopValve ϕ75
Sub-total				[26,160]	
4) Water-supply District, A-B					
Water-supply Pipe ϕ 75	m	170.5	600	10,800	155X1.1
Bend ϕ 75	pc	1	60	60	b-5
Water-supply Valve	pt	7	1200	8,400	AngleValve ϕ65
Sub-total				[19,260]	
5) Water-supply District, B-C					
Water-supply Pipe ϕ 65	m	93.5	420	10,320	85X1.1
Reducer 75→65	pc	1	150	150	r-3
Water-supply Valve	pt	4	1200	4,800	AngleValve ϕ50
Sand-flash Pipe ϕ 65	m	31.5	750	5,250	30X1.05
Sand-flash Valve	pt	1	1,000	1,000	StopValve ϕ65
Sub-total				[21,520]	

(continued)

Description	Unit	Quantity	Unit Price(฿)	Cost(฿)	Remark
6) Water-supply District, K-L					
Water-supply Pipe ϕ 50	m	176.0	400	17,600	160X1.1
Water-supply Valve	pt	9	1,000	9,000	AngleValve ϕ25
Sand-flash Pipe ϕ 50	m	31.5	600	4,700	30X1.05
Sand-flash Valve	pt	1	1,000	1,000	StopValve ϕ50
Sub-total				[31,800]	
Middle-total 1-1,2				[375,490]	
2. Pipe Setting, L 1580m					
2-1 Excavating	cum	1011.2	30	30,336	
2-2 Back-hilling	cum	1011.2	30	30,336	
2-3 Setting (steel)	m	~~530.0~~ 510.0	100	60,000	
-ditto- (PVC)	m	1050.0			
Sub-total				[120,676]	

insert next page 9-1 ⟶

3. Other Facilities

3-1 Water Tank

Excavating	cum	56.8	30	1,704	
Concrete	cum	28.5	1,600	45,600	210kg/m
Concrete	cum	4.1	1,600	6,560	135kg/m
Iron Bar	kg	2458.0	15	36,870	Normal

(continued)

Description	Unit	Quantity	Unit Price(₱)	Cost(₱)	Remark
3. Setting of Suction Pipe					
Suction Pipe	m	100.0	100	10,000	Steel, ϕ80
Wire Box for Gabionade I	pc	111	300	33,300	
Binding Wire	kg	555	28	15540	5 kg/pc
pipe Setting	m	100	100	10,000	
Sub-total				[68,540]	

(continued)

Description	Unit	Quantity	Unit Price(฿)	Cost(฿)	Remark
Wooden Form	sqm	128.8	200	25,760	
Pipe, Step, Valve, etc.	set	1		50,000	
Sub-total				[75,760]	
4 3-2 Pump House	house	1		45,000	
Sub-total				[45,000]	
4 3-3 Water Pump					
① Pump 0.27㎥/minX36mX3000min^{-1}X3.7kw	set	1		40,000	
② Check Valve, Sluice Valve, Reducer, Strainer, Foot Valve, etc.	set	1		30,000	
③ Control Panel, Controller, Electrodes with Holder, etc.	set	1		45,000	
④ Wire for Remote Control (with cover pipe) steel pipe	m	~~600.0~~ 550.0		10,000	1.5 4㎡
⑤ Setting and Testing labours' cost	~~man~~ md			30,000	galvanized
Sub-total				[155,000]	
Middle-total 3-1, 2, 3				[435,034]	
Total				[931,200]	

(continued)

Description	Unit	Quantity	Unit Price(₱)	Cost(₱)	Remark
[6] Run-off Plot Does not include this time but to be added later.					
~~1. Foundation Work, Land Grading~~	~~sqm~~	~~6400.0~~			
~~2. Run-off Plot~~	~~set~~	~~18~~			
Total					
[7] Building					
1. Field Laboratory					
1-1 Temporary Work	round	1		4582	
1-2 Earth Work	"	1		9,360	
1-3 Reinforced Concrete Work	"	1		112,000	
1-4 Steel Skelton Work	"	1		45,000	
1-5 Masonry Work	"	1		33,040	
1-6 Metal Work	"	1		77,970	
1-7 Plaster Work	"	1		17,200	
1-8 Roofing Work	"	1		47,030	
1-9 Joiner's Work	"	1		49,000	
1-10 Painting Work	"	1		38,400	
1-11 Interior Finishing Work	"	1		76,000	
1-12 Electric Work	"	1		33,010	
1-13 Plumbing and Sanitary Work	"	1		86,130	
Sub-total				569,000	

(continued)

Description	Unit	Quantity	Unit Price(฿)	Cost(฿)	Remark
2. Survey and Storage House					
1-1 Temporary Work	round	1		5,980	
1-2 Earth Work	"	1		11,515	
1-3 Reinforced Concrete Work	"	1		137,485	
1-4 Steel Skelton Work	"	1		55,360	
1-5 Masonry Work	"	1		40,647	
1-6 Metal Work	"	1		95,920	
1-7 Plaster Work	"	1		21,160	
1-8 Roofing Work	"	1		57,858	
1-9 Joiner's Work	"	1		60,280	
1-10 Painting Work	"	1		47,240	
1-11 Electric Work	"	1		104,095	
1-12 Plumbing and Sanitary Work	"	1		62,150	
Sub-total				699,717	
3. Machinary Store Hause					
3-1 Temporary Work	round	1		8,000	
3-2 Earth Work	"	1		1,600	
3-3 Reinforced Concrete Work	"	1		13,000	
3-4 Steel Skelton Work	"	1		6,200	
3-5 Plaster Work	"	1		1,000	
3-6 Roofing Work	"	1		12,000	

(continued)

Description		Unit	Quantity	Unit Price(฿)	Cost(฿)	Remark
3-7 Electric Work		round	1		8,000	
	Sub-total				104,000	
4. Dry Yard						
4-1 Concrete		cum	21.6	1,600	34,560	210kg/㎥
4-2 Iron Bar		kg	503.4	15	7,551	
4-3 Wooden Form		sqm	6.0	150	900	
4-4 Cobble Stones for Bed		cum	21.6	380	8,208	
	Sub-total				[51,219]	
	Total				[1,423,936]	

insert next page 13-1 ⟶

GRAND TOTAL [5,359,977]

(continued)

Description	Unit	Quantity	Unit Price(฿)	Cost(฿)	Remark
5. Arrangement of Building Site					
5-1 Excavating of Border	cum	2.775	30	83,250	ℓ=370m
5-2 Excavating of Road-bed	cum	819	30	24,570	
Spreading	cum	819	30	24,570	
5-3 Embankment by Transported Soil					
Excavating and Loading	cum	1,269	55	69,795	
Transporting	cum	1,813	20	36,260	1,269 ÷ 0.7 = 1,813
Spreading	cum	1,813	30	54,390	
Compacting by Tire Roller	cum	1,813	20	36,260	
5-4 Culvert across Road					
Concrete pipe ϕ500, ℓ1.0	pc	20	200	4,000	
Setting	set	1		2,000	
Concrete	cum	0.6	1600	960	
Cobble Stones for Bed	cum	0.7	350	245	
Sub-total				[336,300]	

CONSTRUCTION SCHEDULE

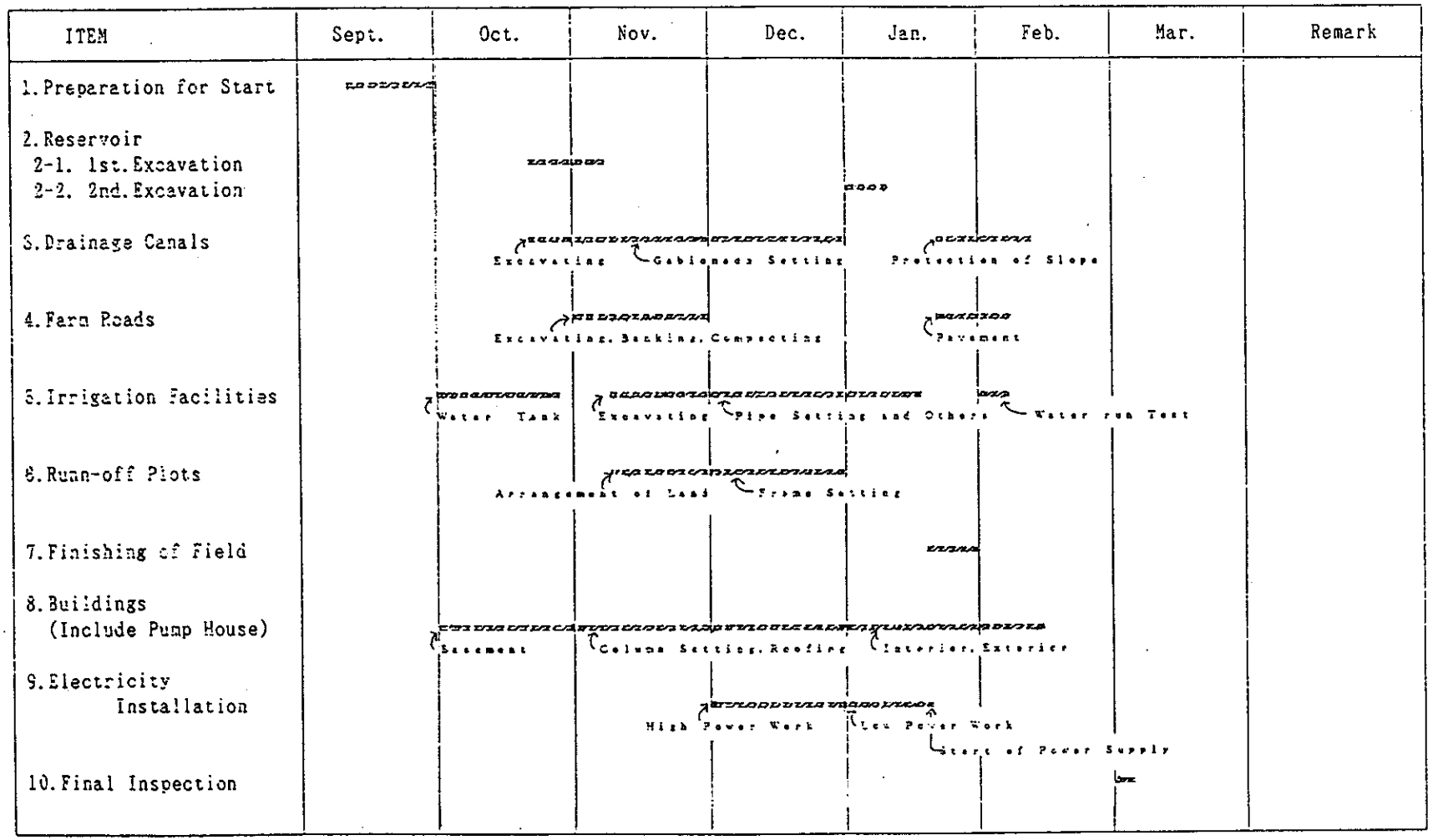

CONTRACT

FOR

CONSTRUCTION WORK OF THE DEMONSTRATION FARM

ON

THE AGRICULTURAL DEVELOPMENT RESEARCH PROJECT

PHASE II

IN

NORTH-EAST THAILAND

JAPAN INTERNATIONAL COOPERATION AGENCY

THAILAND OFFICE

C - 1

CONTRACT

CONSTRUCTION WORK OF THE DEMONSTRATION FARM ON THE AGRICULTURAL DEVELOPMENT PROJECT PHASE II IN NORTH-EAST THAILAND

This Contract is executed on the 10 day of September, 1991 at the Japan International Cooperation Agency, Thailand Office between

Mr. Nobuji ABE, Resident Representative, as its authorized representative of the Japan International Cooperation Agency, Thailand Office, hereinafter referred to as "the JICA" of the one part, and

(Company's Name) Suvalee Co., Ltd. whose office is situated at 11/3 Moo 1 Sukhomvit Rd, Muan, Chonburi, 20000

Tel. (038)275334-8, represented by Mr. Sutin Prasertchaiwanit, Nationality Thai, Title President, hereinafter referred to as "the Contractor", of the other part.

Both parties mutually agree under the terms of this Contract as follows :-

Article 1 Purpose of Agreement and Contract Price

The JICA agrees to employ the Contractor and the Contractor agrees to perform the Works for the Construction of the Demonstration Farm on the Agricultural Development Research Project Phase II in North-East Thailand for the total amount of Seven Million Four Hundred Thousand Baht (=7,400,000. Baht), hereinafter referred to as "Contract Price".

The following documents shall form integral part of this Contract :-

Terms and conditions of this contract
Pledge agreement
Technical specifications
Bill of Quantities
Drawings

Article 2 Performance Bond

As a security for the faithful performance of the Works under this Contract, the Contractor has on the execution of this Contract deposited a performance bond with the JICA, effective from the commencement date to the further period of one (1) year after the completion time of this Contract, in lieu thereof a Bank Guarantee issued by the The Bank of Bangkok bearing the number 164657 and dated on September 13,1999 in the amount of Seven Hundred Forty Thousand Baht (740,000 Baht) which represents ten (10) percent of the Contract Price, on condition that the name of the issuing bank and the form of the bank guarantee are to be approved by the JICA.

The JICA will return the Performance Bond in cash or the Bank Guarantee to the Contractor as the case may be at the end of the twelve (12) months after final acceptance of the Works by the JICA as stipulated in Article 15 of this Contract, provided that the completed Works shall not show any defect or damage caused through the fault of the Contractor, or through the fault of any new Contractor in the case of termination of Contract by the JICA under Article 4.

Should the Contractor be in default, the JICA shall have the right to demand payment from all or any part of the Performance Bond. In addition, the Contractor shall remain liable for the full loss sustained by the JICA.

Article 3 Payment

The JICA agrees to effect payments for the Works to the Contractor in the following manner :-

a. Advance Payment, to be effected upon the bringing of some part of equipment and materials required for the Works and having stored at the job site by the Contractor, and upon the verification of those facts by the Inspection Committee.

Seven Hundred Forty Thousand Baht (740,000. Baht) which corresponds to ten (10) percent of the Contract Price, shall be paid upon verification of the Inspection Committee.

b. First Interim Payment, to be effected according to the progress of the Works satisfactorily executed by the Contractor and accepted by the Inspection Committee.

Tow Million Tow Hundred Twenty Thousand Baht (2,220,000. Baht) which corresponds to thirty (30) percent of the Contract Price, shall be paid upon forty (40) percent completion of the Works.

c. Second Interim Payment, to be effected according to the progress of the Works satisfactorily executed by the Contractor and accepted by the Inspection Committee.

Tow Million Tow Hundred Twenty Thousand Baht (2,220,000. Baht) which corresponds to thirty (30) percent of the Contract Price, shall be paid upon seventy (70) percent completion of the Works.

d. Final Payment, to be effected upon the satisfactory completion of the Works by the Contractor and accepted by the Inspection Committee.

The remainder of Tow Million Tow Hundred Twenty Thousand Baht (2,220,000. Baht) which corresponds to Thirty (30) percent of the Contract Price, shall be paid after the Final Certificate by the JICA for payment to the Contractor.

Payment under (b), (c) and (d) shall be effected within fifteen (15) days after the JICA received the Bill issued by the Contractor based on the respective acceptances of the Works by the Inspection Committee.

Taxes payable by the Contractor, if any, shall be deducted at source by the JICA on each payment.

It shall be expressly understood that these payments by the JICA do not mean being released from responsibilities under this Contract.

Article 4 Completion Time

The Contractor agrees to commence the Works at the site within ten (10) days from the date of signing of this Contract (commencement date) and the Contractor agrees to satisfactorily complete the Works within 166 days (completion time) from the date hereof which will become due on February 28, 1992 (completion date).

If the Contractor fails to commence the Works by the above commencement date, or should in the course of the construction any event occur which may reasonably cause the JICA to believe that the Contractor will not be able to complete the Works on the completion date, or should the Contractor fail to complete the Works by the completion date, or should the Contractor fail to meet any of the Contract requirement, the JICA shall have the right to terminate this Contract by giving written notice to the Contractor.

However, in case that the Contractor fails to complete the Works by the completion date, or to meet any of the Contract requirement, if the Inspection Committee thinks that the Contractor has the ability for completion of the Works within reasonably extended period, the Contractor may be permitted by the JICA to continue the Works beyond the completion date but within the extended time.

Article 5 Penalty

In case that the Contractor is in default as mentioned in Article 4, the Contractor agrees to be responsible to the JICA as follows :-

5.1 In case of the termination by the default of commencement for the Works, the Contractor shall pay a penalty of Ten Thousand Baht (10,000 Baht) per day counting from the commencement date until the new Contract is completely executed with

a new Contractor for this Works, the period of which is included the time spent for finding the new Contractor and executing the new Contract etc.

5.2 In case the JICA thinks that the Contractor will not be able to complete the Works within the completion time and thereby terminates this Contract, the Contractor shall pay a penalty of Ten Thousand Baht (10,000 Baht) per day counting the number of days in the same manner as prescribed in 5.1 above. However, the JICA may reduce such number of days according to the ratio between the completed Works and the total Works as may be decided by the Inspection committee.

5.3 In case the Contractor fails to complete the Works by the completion date or to meet any Contract requirement, the Contractor shall pay a penalty of Ten Thousand Baht (10,000 Baht) per day counting from the date following the completion date until the Works satisfactorily completed and accepted by the Inspection Committee. However, the JICA may reduce such number of days as prescribed in 5.2 above.

Article 6 Compensation

If the JICA sustains any losses as direct or indirect damages caused by the Contractor's failure, the Contractor shall compensate the JICA for such losses. The parties agree that time is essential for the completion of the Works.

Article 7 The JICA's right for default

The JICA has the sole and absolute right to decide whether to terminate the Contract, to impose only the penalty on the Contractor or to claim the compensation for the damage as stated in Article 5 or Article 6. The money due to the JICA exercising its right under this article shall be retained and deducted from any money due to the Contractor but yet unpaid, including from the performance bond. If the total amount of the loss is larger than the money above-mentioned, the Contractor agrees that the JICA has the right to retain the construction equipment, materials and supplies, etc. and demand payment of the balance from such equipment etc. or proceeds of sale thereof.

Article 8 Contractor's responsibility on termination of this Contract

After the Contract has been terminated in accordance with the foregoing Article 4, the JICA shall have the right to employ another Contractor (hereinafter referred to as "New Contractor") to carry on the remaining parts of the Works, and the payment for the Contractor that fail to complete the work shall be made out of the necessary Contract price for the remaining Works. Should the remaining amount after payment of the advance and interim payment from the Contract price, be insufficient to effect payment to the new Contractor, the difference between such remaining amount and actual cost estimated by the JICA for the satisfactory completion Works carried out by the new Contractor, shall be deemed as direct loss sustained by the JICA, and the Contractor shall pay such difference to the JICA within ten (10) days from the date of request by the JICA, failing which interest at the rate of eighteen (18) percent per annum shall be charged thereon.

Article 9 Inspection Committee

The Inspection Committee, authorized to act on behalf of the JICA will be appointed by the JICA and the Inspection Committee is entitled to do all things that the JICA may do so. The Inspection Committee shall control and supervise the Works all the times whether it is in the preparation or implementation of the Works and the Contractor shall promptly furnish all necessary facilities for proper inspections of the Works in accordance with the Inspection Committee's request. At any moment the Inspection Committee can request the Contractor to stop the Works, if necessary and the Contractor shall have no claim on the JICA for extension of the completion time due to such suspension of the Works under this Article.

The inspection will not be deemed as the acceptance of the Works, and the Contractor shall not be relieved from his responsibility to meet the Contract requirements by the fact that the Inspection Committee exercise their duties. Should it be found that the Works have not been satisfactorily performed in the faithful manner, the Contractor shall correct any part of the Works indicated by the Inspection Committee within the period specified by the Inspection Committee.

Article 10 Prohibition of removal for the equipment etc.

Should the Contractor fail to complete the Works during the completion time or the Inspection Committee thinks that the Contractor will not be able to satisfactorily complete the Works, any equipment and materials brought to the site for use on the Works shall not be removed without the prior approval of the Inspection Committee in writing.

Article 11 Rectification of the defective construction

For a further period of One (1) year after satisfactory completion and final acceptance of the Works by the JICA, whether completed by the Contractor or by the new Contractor in case of termination of Contract under Article 4, any damage to the Works which is caused by the Contractor's fault, either because of defective workmanship or the use of inferior materials or any other cause, shall be made good as necessary by the Contractor to the satisfaction of the JICA at no extra cost.

In case of the termination of the Contract, the JICA may decide which part of the Works should come under the Contractor's responsibility, and requests the Contractor to make good of the damaged Works. Should the Contractor fail to do so within period specified after receipt of written request to do so from the JICA, the JICA shall have the right to employ another Contractor to carry out such work and the Contractor agrees to bear all expenses incurred.

Article 12 Discrepancies among the Contract Documents

If, prior to or during the course of the Works, any discrepancies are found in the drawings and/or the Technical Specifications etc. attached to this Contract, the Contractor shall follow the ruling given by the Inspection Committee at no additional cost to the JICA.

Article 13 Construction Method and Temporary Works

The construction method including implementation schedule and plan of the temporary works such as installation of temporary facilities, offices, ware houses,

construction road, electric wiring, etc. shall be submitted by the Contractor and approved by the Inspection Committee at least ten (10) days in advance of the commencement of the Works.

Should the cost of the above temporary works be estimated in the unit cost of each work items of Bill of Quantities in this Contract, the Contractor is not entitled to claim any amount of charges for the temporary works.

Article 14 Modification of Plant

If the Inspection Committee finds it necessary to make modification of construction design and/or materials and so forth during the course of construction, the JICA has the right to order the modification of the Works to the Contractor, and such order shall be made in writing from the Inspection Committee to the Contractor.

The JICA agrees to adjust upwards or downwards the necessary expense for such modification to the Contractor, which will be estimated by unit price in the Bill of Quantities of this Contract in case of modification of quantities of construction works. In the case of additional works which are not quoted by unit price in the Bill of Quantities of this Contract, the Inspection Committee will make estimation thereof and the JICA will pay to the Contractor for such additional works accordingly. But if the Contractor does not agree to such estimation, the Contractor is then entitled to negotiate with the JICA. Also the extension of the completion time due to the modification shall be given by the JICA who shall have the sole right to decide the number of days of such extension.

Article 15 Acceptance of the Works

When the entire Works have been completed, the Contractor shall submit the invoice in written form indicating the Work actually completed to the Inspection Committee. If there are compliance with drawings or Technical Specifications, the JICA shall accept the Works as the final acceptance of satisfactory completion Works within ten (10) days after the receipt of the written form and it shall be deemed that the final acceptance has been made on such date of the receipt of the written form.

On the other hand, should non-compliance with drawings or Technical Specifications or defects be found in the Works executed by the Contractor, the Inspection Committee will have the right not to accept the Works and to order the rectification of the Works. If the required period for the rectification of the Works is beyond the completion date, the Contractor shall not be relieved from its responsibility to pay the penalty as stipulated under Clause 5.3, and after the completion of rectification of the Works, then the final acceptance will be made in the same manner as described in the first paragraph of this Article.

During the course of construction, whether in the completion time or of extended time specified in the last paragraph of Article 4, the JICA has the right to accept a part of the Works already completed in the written form which shall be considered as a part of final acceptance. However, both parties shall negotiate with each other for the maintenance and usage of the accepted part of the Works, and the Contractor is not entitled to request the extension of the completion time due to any interruption caused by the use of such accepted Works by the JICA, or any delay in repairing such accepted Works.

Article 16 Construction Engineer

The Contractor shall appoint a construction engineer at his own expense for the supervision of the Works performance, who shall be authorized to act on behalf of the Contractor, and the instructions given to him shall be deemed as given to the Contractor. Such construction engineer shall be a well English-speaking person and accepted by the JICA, who shall stay at the job site all the time and shall not leave without obtaining the prior approval of the Inspection Committee. If the Contractor replaces the construction engineer, the Contractor shall obtain the prior approval from the Inspection Committee in writing.

Article 17 Replacement of Labour, Foreman and Engineer

The Inspection Committee may request the Contractor to remove any of the Contractor's labours, foremen or engineers if it appears to the Inspection Committee that such labour, foreman or engineer is incompetent for his job or is not suitable or is not capable of handling his workmen or staff, and the Contractor shall promptly replace any such labour, foreman or engineer. No extra cost or claim for extension of time will be allowed because of such replacement.

Article 18 Sub-Contractor

The Contractor shall not sub-contract or assign any portion of the Works under this Contract without obtaining the prior approval of the JICA who has the sole right to decide which portion of the Works may be sub-contracted or assigned to the Sub-Contractor. However, the Contractor shall be fully responsible for the Works done by the Sub-Contractor.

Article 19 Notice

All notices required by this Contract shall be effective only at the time of receipt thereof, and only when received by the parties concerned at following address :-

The JICA Thailand Office
1674/1, New Petchburi Road, Bangkok 10310, Thailand
(via the Provisional Office of the JICA in A.D.R.C., Khon Kaen)

The Contractor Suvalee Co., Ltd.
11/3 Moo 1 Sukhomvit Rd, Muan, Chonburi, 20000

All Notices required by the terms of this Contract shall be made in writing in English Language, and delivered by registered mail or hand delivery.

Article 20 Dispute

In the event of any dispute arising from the interpretation and performance of the terms of this Contract, both parties agree to make the best attempt with sincerity and in good faith to negotiate and amicably settle such dispute, failing which the parties agree to refer such dispute to arbitration under Thai Commercial Arbitration Rules and Regulation, Bangkok, by 2 arbitrators, each of which is to be appointed by each party. If either party fails to appoint its arbitrator within seven (7) days or should the arbitrators fail, within fifteen (15) days after their appointment, to agree upon the decision of the dispute or no decision be

reached on the appointment of an umpire, then the dispute shall be brought before the Court of Thailand for decision under the laws and procedures of the Kingdom of Thailand.

This Contract is executed in duplicate of the same tenor, one of the original copy to be kept by JICA and the other original copy to be kept by the Contractor. Both the JICA and the Contractor have set their signatures and affixed the seals thereto in the presence of the witnesses.

JICA

Mr. Nobuji ABE,

Resident Representative,
Japan International Cooperation Agency, Thailand Office.



Contractor

Mr. Sutin Prasertchaiwanit
President
Suvalee Co., Ltd.

Mr. Tanom Kriengtaweekit
Exective Director
Suvalee Co., Ltd.

Witness

Dr. Torao Goto
Project Leader
The Agricultural Development Research Project Phase II

Witness

TERMS AND CONDITIONS OF THIS CONTRACT

Section 1 General Information

1.1 Objective

According to the Record of Discussion signed December 16, 1988, technical cooperation concerning Agricultural Development Research Project Phase II in North-East Thailand (hereinafter referred to as " the Project") will be carried out.

The objective of the Works are to construct the Demonstration Farm which will prove the fruits of the developed cropping technology based on technical cooperation.

1.2 Location of the site

The job site is located at Khao Suan Kwang, Khon Kaen, 40280.

1.3 Collaboration

According to the objective of the technical cooperation, the counterpart agency of the JICA is executing several experiments around the job site. Prior to or during the course of the Works, the Contractor shall make the good relation with the related Organizations *) for the satisfactory implementation of the Works as to secure full collaboration. Should it happen that the relation between these Organizations and the Contractor is disturbed, the Contractor shall inform the Inspection Committee who will conciliate the both parties.

*)	A.D.R.C	:	Agricultural Development Research Center
	DLD	:	Department of Land Development
	DOA	:	Department of Agriculture
	KKU	:	Khon Kaen University

Section 2 Submission of Notices

2.1 Work schedule

The Contractor shall submit the Work Schedule in following items before the commencement of the Works at the job site. If the Contractor intends to change the Work

Schedule, the approval from the Inspection Committee shall be obtained prior to the modification of the schedule.

1. Preparation of facilities and transportation of equipment, etc. to the job site
2. Reservoir
3. Drainage Canal
4. Farm Road
5. Irrigation Facilities
6. Run-off Plots
7. Finishing of Field
8. Building
9. Clearing of Site

Also the Contractor shall submit the machineries scheme including the numbers, kind of machineries and using period of them.

2.2 Notices

The JICA and the Contractor shall submit the notices to each other, as necessary, in accordance with Article 19 in this Contract within reasonable time except that special articles are provided in this Contract and Terms and Conditions of this Contract.

Section 3 Field Test and Inspection

The field tests in accordance with the Technical Specification and the demands from the Inspection Committee shall be the responsibility for the Contractor. The charges for such field test shall be included in the total amount of the construction cost, and the Contractor is not entitled to claim any amount of the field test charges.

Section 4 Modification of Plan

In case the JICA estimate the cost for the modification in accordance with Article 14, and if there are two portions, one for the increase and the other for the decrease of the construction cost resulting from such modification, the JICA shall have the right to offset

them in the payment and pay or claim the difference between the increase and decrease of the construction cost as the case may be.

Section 5 Release from the Works

After the final acceptance of the Works by the JICA, the Contractor shall remove its own temporary facilities, warehouses, construction roads, electric wiring, surplus material, debris and so forth which were provided by the Contractor within ten (10) days. Upon approval of the Inspection Committee for the removal of the abovementioned facilities, etc., the Contractor will be released from its responsibility of the Works but remains responsible under one (1) year guarantee of the Works as specified in Article 11 in this Contract.

Section 6 General Obligations of the Contractor

6.1 Temporary office and residence

In case the Contractor intends to build the temporary office, residence and so forth, the Contractor shall submit the plan to the Inspection Committee for approval at least ten (10) days in advance of the commencement of the Works.

The Contractor is always required to keep the buildings and facilities in good condition and to make proper drainage and sanitary system. Should the Contractor build them outside of the job site, the Contractor shall arrange with the owner of the such land at its own expense.

6.2 Fuel storage

In area of temporary office and residence, the fuel tank capacity shall not exceed 1,000 liters and shall be far away from the housing area.

Fuel storage and transportation shall be done with care and shall have a good system of fire prevention. If storage licence is required, the Contractor shall arrange for obtaining it.

6.3 Other facilities

All necessary facilities for the Works and the Contractor's convenience shall be provided and maintained in good condition by the Contractor.

Section 7 General Text

The Contractor shall implement the Works in accordance with the Contract Documents in broad sense such as the Contract in narrow sense, Terms and Conditions of this Contract, Technical Specifications, etc. Should the events occur that the both parties can not reach agreement on the interpretation of the above-mentioned Contract Documents in broad sense, both parties shall negotiate with sincerity and good faith for settlement of any disagreement, failing which the decision of the JICA shall prevail.

TECHNICAL SPECIFICATIONS

ON

CONSTRUCTION WORK OF THE DEMONSTRATION FARM

FOR

THE AGRICULTURAL DEVELOPMENT RESEARCH PROJECT

PHASE II

IN

NORTHEAST THAILAND

JAPAN INTERNATIONAL COOPERATION AGENCY

THAILAND OFFICE

THECHNICAL SPECIFICATIONS

PART 1 SPECIAL PROVISION

1-01 The contractor shall exercise utmost care so that his construction operations will not damage any existing structure except such structures as specified to be dismantled, or will not cause the disturbances on the personal cultivation land of the other project. Any damages on the such existing structure or facilities shall be made good by the Contractor at his expense.

1-02 If it is necessary in the prosecution of the work to interrupt or obstruct the drainage of the surface, the flow of artificial drains and the flow of irrigation canal, the contractor shall provide for the same during the progress of the work in such a way that no damage shall result to either public or private interest. For any neglect to provide for either natural or artificial irrigation or drainage which he may interrupted, he shall be held liable for all damages which may result therefrom during the progress of the work.

1-03 The Contractor is expected to visit the location of the work and make his own estimate of the facilities needed for the work. In the successful execution of the contract, the Contractor is expected to familiarize himself with local conditions, availability of labor, transportation facilities, uncertainties of weather, and other contingencies. From investigation, made at site, it is believed that topographical conditions are approximately shown on the drawings, but the nature of the materials and the depth of satisfactory foundations, are not guaranteed. It is expressly understood that JICA will no be responsible for any deduction, interpretation, or conclusions made by the Contractor.

JICA does not guarantee that other materials will not be encountered or that the proportions of the several materials will not vary from those indicated by the drawings.

1-04 Elevation referred to the datum plane are to be determined from bench marks established by JICA or the Inspection Committee at the site of the work.

1-05 The Inspection Committee will establish the necessary survey monuments and bench marks at convenient points in the area covered by this contract for use of the Contractor in laying the lines and grades required for the proper conduct and execution of the work. All stakes, bench marks, etc., placed by the Inspection Committee in laying out the work, shall be carefully guarded and preserved by the Contractor, and in

such case stakes or marks are misplaced or rendered useless through the carelessness or negligence of the Contractor or his agents, employees or workmen, they will be replaced by the Inspection Committee at the expense of the Contractor.

1-06 The Contractor shall execute the work to the lines and grades given by the drawings and/or the Inspection Committee. The Contractor shall, at his own expense, furnish all stakes, templates, patterns, platforms and labor that may be required in setting or laying cut any part of the work.

PART 2 GENERAL CONSTRUCTION FACILITIES

2-01 SCOPE

This part covers the construction and/or maintenance of access roads, setting up of Contractor's camp facilities, providing camp security and the disposition of the Contractor's various facilities at the end of the contract.

2-02 ROADS

(a) The Contractor shall improve, repair and widen, if necessary, existing roads to satisfactorily meet his haulage requirements. He shall also construct all other roads within the construction area which he deems necessary in the prosecution of his work. The improving, widening and maintaining of existing roads and constructing and maintaining new roads shall be made without cost to JICA, and same shall be made on the responsibility of the Contractor during and up to the completion of all construction work under the contract.

2-03 CONTRACTOR'S CAMP FACILITIES

(a) If the Contractor deems necessary, he shall grade his camp site; construct his office, employee's housing, warehouses, machine and repair shops, fuel storage tanks ; and provide such other facilities that the Contractor deems necessary for maintaining health, peace and order in the camp and work area.

(b) The location, construction, operation and maintenance of such camps and facilities within the areas of the site shall be subject to the approval of the Inspection Committee. At least ten (10) calender days prior to the date on which the Contractor desires to begin to work in feature of camp construction, the Contractor shall submit for the approval of the Inspection Committee drawings and specifications, in sufficient detail to permit determination of

suitability of the construction in compliance with these specification, and no camp construction of any kind shall be undertaken until such drawings and specification have been approved by the Inspection Committee.

2-04 CAMP SECURITY

The Contractor shall provide his own security force to the extent that he deems necessary for maintaining peace and order in the camps and work areas and to safeguard materials and equipment.

2-05 DISPOSITION OF CAMP AND CONSTRUCTION FACILITIES

After the completion of the work covered by the Contract, the entire camp of the Contractor, including its water supply system, quarters, warehouses, shops and other facilities therein ; and all other temporary installations at work areas shall be removed by the Contractor and the site shall be cleaned.

2-06 PAYMANT

There will be no separate payment for complying with the requirements of this part. The expenses incurred by the Contractor shall be included in the item of Common Temporary Works as indicated in the Unit Cost which the Priced Bill of Quantity is based on.

PART 3 CARE OF WATER DURING CONSTRUCTION

3-01 SCOPE

In accordance with specifications contained in this part, the Contractor shall care the water during construction so that construction work can be performed in areas free from water. Care of water during construction shall include provision for drainage and pumping system for dewatering the foundation areas and the construction of temporary bulkheads necessary for the protection of construction operations form encroachment by water.

3-02 DRAINAGE AND PUMPING

The Contractor shall be responsible for dewatering the foundation areas so that work may be carried on in a suitable dry condition, draining and/or pumping all water during the process of construction until its completion. The Contractor shall construct

drainage ditches, holes, or culverts ; furnish, operate, and maintain at his own expense all necessary pumps, to keep all work areas in amply dry condition, and prior to final acceptance of the work by the Contracting Officer, the Contractor shall remove, fill or plug all temporary drainage structures and pumping equipments at his expense.

3-03 PAYMENT

No separate payment shall be made for the care of water during construction. But the cost of furnishing, constructing, operating, maintaining, and removal of temporary drainage structures, canals, and pumping system necessary to keep construction operations free from water shall be included in item of Common Temporary Works as indicated in the Unit Cost which the Priced Bill of Quantity is based on.

PART 4 OPEN EXCAVATION AND FOUNDATION PREPARATION

4-01 SCOPE

In accordance with the Specifications, contained in this part, and as shown on the drawings, or otherwise directed by the Inspection Committee, the Contractor shall perform all required open excavation and foundation preparation pertinent to the construction of reservoir, farm, road, irrigation pipe-line, drainage canal, and other construction work where open excavations are to be made.

4-02 OPEN EXCAVATION

(a) General

Open excavation under these Specifications consists of the removal, hauling, dumping, and satisfactory disposal of all materials from required excavations for reservoir, farm road, drainage canals and miscellaneous excavations for other structures included under this contract. Open excavation shall be performed to the lines and grades shown on the drawings or established by the Inspection Committee. The Inspection Committee may modify slopes of excavation to fit conditions encountered during construction. Such changes or modifications shall not be considered by the Contractor as a basis for additional compensation over and above the unit prices bid. All necessary precautions shall be taken to preserve the ground outside the specified lines and grades in the soundest possible condition.

(b) Foundation in Loose Material

When the surfaces of excavation upon or against which concrete or embankment fill is to be placed consist of loose material, the said loose materials shall be removed or replaced with suitable materials and compacted in a manner satisfactory to the Inspection Committee. The cost of removing the loose materials shall be paid for under the pertinent bid items for open excavation. The cost for the replacement with suitable materials and the compaction of the same shall be paid for under the pertinent bid items for fill.

4-03 DISPOSITION OF EXCAVATED MATERIALS

(a) Spoil Areas

The Contractor shall submit for the approval of the Inspection Committee locations, areas, drawings and other necessary specifications of spoil area which the Contractor proposes to use for the work under this Contract, and any kind of disposition shall not be undertaken before obtaining the said approval. Excavated material not suitable for fill or otherwise not needed shall be wasted in approved spoil area. Spoil piles shall be constructed to the stable slopes of the material being wasted.

Any spoil pile exceeding two (2) meters in height shall not be performed. Spoil material shall be spread and graded so that surface drainage will not be concentrated and will not create and/or accelerate undesirable erosion in spoil areas.

4-04 DEMOLITION, REMOVAL, AND DISMANTLING

When specified in the drawing or the Inspection Committee, existing concrete structures, such as concrete masses, stones, etc., shall be demolished and disposed of accordingly.

4-05 FOUNDATION PREPARATION

(a) Fill on Earth

All horizontal and sloped earth surfaces, upon which embankment material is to be placed or other foundation surfaces whose locations are specifically indicated by the Inspection Committee, shall consist of undisturbed or compacted material and shall be clean, damp, free from standing or running

water and free from organic matter ; and shall be suitable as a foundation for the material to be placed upon them.

(b) Concrete

All horizontal and sloped earth surfaces upon which concrete is to be placed shall be undisturbed or of approved compaction, clean and damp, free from standing or running water, and shall be otherwise suitable as a foundation for the concrete to be placed upon them.

4-06 MEASUREMENT FOR PAYMENT

(a) Open Excavation

A survey of the areas to be excavated shall be made by the contractor prior to the commencement of the work under this contract, and all measurements of excavation shall be based on this survey without regard to any change that may occur during the prosecution of the work. All such surveys shall be the subject to check and approval by the Inspection Committee. Volumes will be computed and shall be the amount between the original ground determined by the survey and the slopes, lines and grades shown on the drawings or established by the Inspection Committee.

(b) Foundation Preparation

No separate payment will be made for all foundation preparation specified under Paragraph 4-05 (a). The entire cost of foundation preparation for 4-05 (a), shall be included in the unit price for the pertinent item of embankment or fill in the Bill of Quantity. The cost of foundation preparation specified under Paragraph 4-05 (b), shall be paid for under the pertinent item shown in the Bill of Quantity, and the measurement shall be made by the acceptable method to the Inspection Committee.

(c) Demolition, Removal and Dismantling

Demolition, removal and dismantling work will be measured by the acceptable method to the Inspection Committee and paid for under the items shown in the Bill of Quantity.

PART 5 FILL AND BACKFILL

5-01 SCOPE

In accordance with the specifications contained in this part and as shown in the drawings or otherwise directed by the Inspection Committee the Contractor shall furnish and place the earth fill for dam, farm road embankment and for ground embankment ; backfill for related structures. Any work of fill and backfill shall not be commenced without prior approval of the Inspection Committee. The slope of the embankment shall be finished to the designed gradient by providing fixed rules.

5-02 BACKFILL

Backfill, as used herein, is defined as refill for structures. The materials used for backfill for structures shall be free from roots, stones of more than five (5) centimeters in diameter, and other objectionable materials and subject the approval of the Inspection Committee. Backfill materials shall be placed in layers, each layer being not more than twenty (20) centimeters thick before compaction, thoroughly compacted by means of power tampers or other means of approved by the Inspection Committee.

5-03 FILL

(a) Lines and Grades

The fills shall be constructed to the lines, grades and cross sections indicated on the drawings, unless otherwise directed by the Inspection committee. The Inspection committee may increase or decrease the slopes of the fill or make such other change in the design as may be deemed necessary to produce a stable structure. Change in quantities of materials, resulting from prescribed changes in section, shall not make cause for claims for increased unit prices. Generally, a tolerance of plus or minus 0.05 meter from the slope lines and grades shown on the drawings will be allowed in the finished surfaces of the embankments except that the tolerances shall not be continuous over an area greater than twenty (20) square meters.

(b) Conduct of the Work

1) The contractor shall maintain and protect the fills in a satisfactory condition at all times until final completion and acceptance of all work under the Contract. Any approved fill material which is rendered unsuitable after being placed in the fills shall be replaced by the Contractor

and no additional payment will be made there. The Contractor shall excavate and remove from the fills any material which the Inspection Committee considers objectionable and shall also dispose of such material and refill the excavated as directed, all at no additional cost to JICA. The Contractor may be required to remove at his own expense any fill material placed outside of prescribed slope lines.

2) When the excavation of suitable fill material from required excavation and approved borrow sources progresses at a faster rate than placement in the fills, such excavated materials may be stockpiled at approved locations until use is authorized.

No separate payment will be made for stockpiling or reloading and hauling of this material to its place in the fills and all costs in connection therewith shall be included in the applicable contract unit price for the fill materials.

5-04 MATERIALS

(a) Sources

The Contractor shall submit for the approval of the Inspection Committee locations, areas, drawings and other necessary specifications of borrow area which the Contractor proposes to use for obtaining fill material. Materials for fills shall be secured from required excavations and from the borrow areas as approved. There is no guarantee that all the materials in any borrow area will be suitable for use in the fills and the Contractor shall move or modify his operations to avoid unsuitable material. The Contractor shall maintain and operate sufficient excavating and hauling equipment so that an adequate amount of fill material from all sources is available as required. Operations in borrow areas shall not be on danger roads, building, or structures. Borrow areas shall be graded to provide drainage from all parts of the excavated areas. When operations in a borrow area have terminated, the area shall be dressed to a neat and orderly appearance, as approved by the Inspection Committee. Any additional material needed shall be obtained from sources approved by the Inspection committee.

(b) Suitability

Materials containing brush, roots, sod or other perishable material will not be considered suitable for fills. The suitability of the materials shall be subject to the approval of the Inspection Committee.

5-05 PLACEMENT

(a) General

No fill material shall be placed on any part of the fill foundations until such areas have been inspected and approved by the Inspection Committee and until after completion of foundation preparation as specified in PART 4. The gradation and distribution of materials shall be such that the fills will be free from lenses, pockets, and streaks.

(b) Earth Fill

The fill material shall be dumped spread in horizontal layers having an uncompacted thickness of not over 20 cm. When material is spread, chunks larger than 10 cm in size shall be broken down by approved means or removed.

5-06 COMPACTION

(a) General

After a layer of fill material has been dumped and spread, it shall be compacted by hand operated mechanical tampers or by other compaction machine approved by the Inspection Committee, to a density more than 85 percent of the maximum dry density of the material or to a density specified by the Inspection Committee.

(b) Fill on or against Culverts and Concrete Structure

No fill shall be placed on or against concrete surface before a period of fourteen (14) days has elapsed after placing the concrete. Before passage of hauling equipment over the top of culverts or other structures will be permitted, the depth of fill over the concrete shall be sufficient to permit such passage without harmful stresses or vibrations in the structure. Fill placed around and over culverts or other structures shall be compacted by hand operated

mechanical tampers or by man power to a density equal to that specified for the other earth fill.

5-07 ADDITIONAL COMPACTION

If in the opinion of the Inspection Committee, the desired compaction of portion of the embankment is not secured, additional compacting operation shall be made over the surface area of such designated portion until the desired compaction has been obtained, without additional cost to JICA.

5-08 QUALITY CONTROL

If it is required, tests for moisture content and density, and other all necessary tests will be made by the Inspection Committee, and from these tests, corrections, adjustments, and modifications of methods, materials, and moisture contents may be made in order to secure satisfactory density of the fill materials. The Contractor shall provide necessary unskilled labor in obtaining and preserving samples.

5-09 MEASUREMENT FOR PAYMENT

(1) Fill

(a) Measurement

Measurement for payment of fill will be calculated on the number of cubic meters of material placed between the foundation lines as determined on the basis on drawings or a survey made after completion of the excavation and foundation preparation and the lines, grades and slopes shown on the drawings. No allowance will be made for foundation or embankment settlement.

(b) Payment

Payment shall constitute full compensation for all work in connection with the excavation from borrow areas including clearing, grubbing and stripping of borrow areas, hauling, stock-piling, rehandling, foundation preparation, placing, spreading, sprinkling, drying, breaking up, compacting, removal of objectionable material, and all other work required for the construction, protection and maintenance of the fills. No adjustment in payment will be made for substitution of materials and for additional compaction.

(2) Backfill

Measurement for payment of backfill shall be calculated on the number of cubic meters of materials placed among the original ground line, or designated line of backfill and the structure and the neat pay lines of excavation shown in the drawing. Payment will be made on the unit price bid per cubic meter of backfill.

PART 6 CONCRETE WORKS

6-01 SCOPE

In accordance with the Specifications contained herein and as shown on the detail drawings or otherwise directed, the Contractor shall -

(a) Furnish all materials, and manufacture, transport, place, finish, protect and cure concrete ;

(b) Furnish, construct, erect and dismantle forms ;

(c) construct expansion and construction joints and furnish and place waterstops, joint fillers, and sealing compound, if required : and

(d) Prepare, clean, cut, bend and place steel reinforcement.

6-02 CEMENT

(a) General

Cement for mortar and concrete work shall be Portland Cement which conforms to the requirements of the Standard Specifications for Portland Cement (A.S.T.M. Designation C150-69).

(b) Storage

Cement shall be stored in a dry, weather tight and properly ventilated warehouse with adequate provisions for the prevention of absorption of moisture. All storage facilities shall be subject to approval and shall be such as to permit easy access for inspection and identification. Cement which has been stored for more than one month or which is suspected to be damp shall not be used unless otherwise approved by the Inspection Committee.

6-03 FINE AGGREGATE

(a) Composition

Fine aggregate shall be natural sand not including organic matter and other foreign substances.

(b) Quality and Grading

1) Quality -- Fine aggregate shall consist of hard, tough, durable, uncoated particles. The shape of the particles shall be generally rounded or cubical and reasonably free from flat or elongated pieces. The fine aggregate shall conform to the following specific requirements :

2) Grading -- Fine aggregate shall be well graded from fine to coarse and the gradation shall conform to the following requirements as delivered to the mixers :

Sieve Designation U.S.Std. Square Mesh	Cumulative Percentage by Weight Passing
No. 4	95 - 100
No. 16	60 - 75
No. 100	2 - 10

In addition to the grading limits shown above, the fineness modules shall be in the range form 2.30 to 3.00.

(c) Storage

Fine aggregate shall be stored in such a manner as to avoid the inclusion of any foreign material in the concrete. Sufficient live storage shall be maintained at all times to permit continuous placement of concrete at the rate specified.

6-04 COARSE AGGREGATE

(a) Composition

Coarse aggregate shall consist of gravel, crushed gravel or rock, or a combination of gravel and crushed gravel or rock.

(b) Quality and Grading

1) Quality -- Coarse aggregate shall consist of hard, tough, durable, clean and uncoated particles. All foreign materials and dust shall be removed by adequate processing. The particle shape of the smallest size of crushed coarse aggregate shall be generally rounded or cubical, and the coarse aggregate shall be reasonably free from flat and elongated particles in all sizes.

2) Grading -- The coarse aggregate shall be well graded from fine to coarse. The grading of the aggregate as delivered to the mixer shall be as follows:

Sieve Designation U.S.Std. Square Mesh	Per Cent by Wt. Passing Individual Sieves 3/4" Max.
1 "	100
3/4 "	90 - 100
3/8 "	20 - 50

3) Size -- Unless otherwise directed, the maximum sizes of coarse aggregate to be used in the various parts of the work shall be 3/4 inch.

4) Storage -- Storage of coarse aggregates shall be as that specified in Paragraph 6-03 (c) for fine aggregates.

6-05 AGGREGATE SAMPLES

Samples of the aggregate shall be furnished at a point designated by the Inspection Committee for his approval at least ten (10) days in advance of the time when the placing of concrete is expected to begin.

6-06 WATER

Water used in mixing concrete shall be fresh, clean and free from injurious amount of oil, acid, alkali, salts, or organic matter.

6-07 PROPORTIONING OF CONCRETE

(a) The Contractor shall design the mix proportion for every class of concrete placing for the approval of the Inspection Committee. The Contractor shall carry out the mix test in case of being requested by the Inspection Committee. The test is to be made at the expense of the Contractor.

(b) The compressive strength of the age of 28 days shall be as follows and desirable mix proportion is also indicated.

Class	Minimum 28 days Compressive strength	Mixing proportion by volume cement : fine aggregates : coarse aggregates
A (Reinforced concrete)	210 kg/cm^2	1 : 2 : 3
B (Plain concrete)	160 kg/cm^2	1 : 2 : 4
C (Concrete layer)	135 kg/cm^2	1 : 3 : 4

Other proportions for mixed design may be indicated by the Inspection Committee at the site of work, if it is necessary.

6-08 MIXING

(a) Equipment

Concrete shall be mixed by portable concrete mixer unless otherwise approved by the Inspection Committee.

(b) Measurement

The measurement of every ingredient of concrete shall be made in weight. Nevertheless, the measurement in volume is admitted subject to the approval of the Inspection Committee.

(c) Mixing Time and Method

The mixing time of concrete shall be more than two (2) minutes and less than five minutes. Over mixing, requiring the introduction of additional water to preserve the required consistency, will not be permitted. The mixer shall be completely emptied before receiving the materials for the succeeding batch and shall be kept clean and washed out after stopping work at the end of each shift.

On commencing work, the first batch shall contain sufficient excess of cement, sand and water to coat the inside of the drum to avoid the reduction of the required mortar content of the mix.

6-09 CONVEYING

(a) General

Concrete shall be conveying from mixer for forms, as rapidly as practicable, by methods which will prevent segregation or loss of ingredients. There shall be no vertical drop greater than 1.5 meters except where suitable equipment is provided to prevent segregation and where specifically authorized. Belt conveyors, chutes or other similar equipment in which the concrete is delivered to the structure in a thin, continuously exposed flow, will not be permitted except for very limited or isolated sections of the work. Such equipment shall be arranged to prevent objectionable segregation.

6-10 PLACING

(a) Approval

Approval of the Inspection Committee shall be obtained before starting any concrete pour.

(b) General

Concrete shall be worked into the corners and angles of the forms and around all reinforcement and embedded items without permitting the material to segregate. Not more than three (3) cubic meters shall be deposited in one pile for compaction. Free water shall be collected in depressions away from the forms and removed by bailing prior to placement of additional concrete. All concrete placing equipment and methods shall be subject to approval.

(c) Cooling of Aggregates

The aggregate shall be cooled by wetting if it is drier than the condition known as saturated surface-dry.

(d) Concrete on Earth Foundation

All concrete shall be placed upon clean, damp surface free from standing or running water. Prior to placing concrete, the earth foundation shall be satisfactorily compacted in accordance with approved methods.

(e) Concrete on Other Concrete

Surface upon or against which concrete is to be placed shall be clean, free from oil, standing or running water, mud, dummy rock, objectionable coatings, debris, and loose, semidetached or unsound fragments. To insure a firm and tight bond between fresh concrete and other concrete, concrete surfaces, wherever necessary, shall be chipped or roughened as directed by the Inspection Committee. All surfaces shall be wetted thoroughly to keep them in a completely moist condition before placing concrete. All approximately horizontal surfaces shall be covered with a layer of mortar of the same cement-sand ration as used in the concrete mix before the concrete is placed.

6-11 FORMS

(a) General

Forms shall be used, wherever necessary, to confine the concrete and shape it to the required lines, or insure against contamination of the concrete. Forms shall have sufficient strength to withstand the pressure resulting from placement and vibration of the concrete, and shall be maintained rigidly in correct position. Forms shall be sufficiently tight to prevent loss of mortar from the concrete. Forms for exposed surfaces against which backfill is not to be placed shall be lined with a form grade plywood or sheet steel. Steel panel forms may also be used.

(b) Cleaning and Oiling of Forms

At the time concrete is placed in the forms, the surfaces of the forms shall be free from incrustations of mortar, grout, or other foreign material that would contaminate the concrete or interfere with the fulfillment of the Specifications' requirements relative to the finish of formed surfaces. Before concrete is placed, the surfaces of the forms shall be oiled with a commercial form oil that will effectively prevent sticking and will not stain the concrete surfaces.

(c) Removal of Forms

Forms shall be removed as soon as practicable in order to avoid delay in curing and to make possible earliest practicable repair of surface imperfections, but in no case shall they be removed before approval. Any needed repair or treatment shall be performed at once, and shall be followed immediately by the specified curing. Forms shall be removed with care so as to avoid injury to the concrete, and any concrete so damaged shall be repaired.

6-12 CURING AND PROTECTION

(a) General

All concrete shall be moist cured for a period of not less than seven (7) consecutive days by an approved method or combination of methods applicable to local conditions, except that the curing period may be reduced to three days for concrete made with high-early-strength cement. The Contractor shall have all equipment needed for adequate curing and protection of the concrete on hand and ready to install before actual concrete placement begins.

(b) Water Curing

Concrete shall be kept wet by covering with an approved, watersaturated material or by a system of perforated pipes or mechanical sprinklers or by any other approved method which will keep all surfaces continuously (not periodically) wet. Water for curing shall be generally clean and free from any element which might cause objectionable staining or discoloration of the concrete.

6-13 REPAIR OF CONCRETE

Repair of imperfections in formed concrete shall be completed within twenty four (24) hours after removal of forms at no additional cost to JICA. Fins shall be neatly removed from exposed surfaces. Concrete that is damaged or honeycombed must be removed to sound concrete and replaced with drypack mortar, or concrete as hereinafter specified. Where large bulges and abrupt irregularities protrude, the protrusions shall be reduced by bush-hammering and grinding. Drypack filling shall be used for holes left by the removal of fasteners from the ends of form tie rods.

6-14 DRYPACK MORTAR

Drypack shall consist of a mixture (by dry volume or weight) of one (1) part cement to 2-1/2 parts of sand conforming to Paragraph 6-03. Fine Aggregate, except that, in gradation, 100 % shall pass a No. 16 sieve. Only enough water shall be used to produce a mortar which, when used, shall stick together on being molded into a ball by a slight pressure of the hands, and shall not extrude water but will leave the hands damp.

6-15 STEEL REINFORCEMENT

(a) General

The Contractor will furnish all steel reinforcement in accordance with the drawings and these specifications. The Contractor shall prepare, clean, cut, bend and place all reinforcements, as shown on the detail drawings or as otherwise directed. The Contractor shall furnish all chains, supports and ties. All reinforcement shall be reasonable free from loose, flaky rust and scale, and free from oil, grease and other coating which might destroy or reduce its bond with concrete.

(b) Relationship of Reinforcement to Concrete Surfaces

The distance from the edge of the main reinforcement to the concrete surface shall be 5 cm except such portions as shown in the drawings. The concrete covering the stirrups, spacer bars, and similar secondary reinforcement may be reduced by the diameter of such bars, unless otherwise indicated.

(c) Lapping

Lapping length at joints of the reinforcing bar shall be at least thirty times of the diameter of bar and shall be bound by steel wire.

(d) Supports

All reinforcements shall be secured in place by use of metal or concrete supports, spacers or ties. Such supports shall be of sufficient strength to maintain the reinforcement in place throughout the concreting operation. The supports shall be used in such a manner that they will not be exposed or contribute in any way to the discoloration or deterioration of the concrete.

6-16 MEASUREMENT FOR PAYMENT

(a) Concrete

1) Measurement for payment for plain or reinforced concrete, will be based on the volume of concrete in place within the lines and grades shown on the drawings.

2) No deduction will be made for rounded or bevelled edges, or space occupied by metal work, or embedded items such as supports, spacers or ties. The cost of construction joint treatment with the attendant loss of material shall be included in the unit price bid per cubic meter of concrete.

3) Payment at the unit prices bid shall constitute full payment for all costs for concrete work. The costs of any dewatering required to maintain dry conditions during the pouring of concrete, furnishing materials, and installing and removing formwork, shall be included in the unit cost.

(b) Steel Reinforcement

Measurement for payment for furnishing, preparing bar cleaning, cutting, bending, and placing steel reinforcement by the Contractor will be based on the number of kilograms placed in accordance with the detail drawings or as otherwise directed. Payment will be made for steel in laps as shown on the drawings ; where bars are welded, payment will be made as if they were lapped. Payment will not be made for steel in laps or used which are solely for the convenience of the Contractor. Payment will be made at the unit price bid for steel reinforcement. No separate payment will be made for steel reinforcement supports, and the cost thereof shall be included in the unit price bid.

PART 7 RESERVOIR WORKS

7-01 GENERAL

In accordance with the Specifications contained in this Part and as shown in the drawings or otherwise directed by the Inspection Committee, the Contractor shall perform all required excavation, compaction, embankment and slope protection.

Specifications of open excavation and removal of surplus soil shall be indicated in Part 4-02 and Part 4-03 respectively.

7-02 EARTH MATERIALS FOR EMBANKMENT

Some part of the excavated earth materials shall be used for the embankment material for the dam, and if those excavated soil are deemed unsuitable for the purpose, the embankment materials shall be borrowed from pits with soils in suitable texture.

7-03 COMPACTION

The dam section shall be compacted with roller carefully. Thickness for one compaction shall be spread about 20 cm in spread. Also compaction water shall be sprinkled for keeping optimum moisture content of the materials.

7-04 SLOPE PROTECTION

Finishing work of embankment slopes shall be made by compacted with hand rammer for protection of slopes from erosion. Where shown on the drawings or as directed by the Inspection Committee, the Contractor shall construct slope protection by the sod at the part of the down slope. Also under constructing the sod shall be sprinkled until rooted by the Contractor.

PART 8 DRAINAGE CANAL

8-01 GENARAL

Drainage canal shall be constructed at the locations shown on the drawings or as directed by the Inspection Committee. Protecting the soil erosion, gradient of slop shall be gentle as shown on the drawings. Also in order to slow down the velocity of flow drops shall be constructed in several points of the canal. The Contractor shall execute these to the location and elevation as shown on the drawing and/or indication by the Inspection Committee.

8-02 GABIONADE

Gabionade shall consist of wire-net boxes packed with gobble stones. Wire-net box shall be made by galvanized wire-mesh (#11, 2"). Gabionade shall be fixed by the pile of iron bar (ϕ25 mm) inserted to the hole drilled by hand auger (ϕ10 cm) and

filled by mortar. Upper part of the pile on the ground shall be cased with PVC pipe and filled by mortar.

8-03 SLOPE PROTECTION

Protecting the slope sod facing shall be executed at the top of slope in width of 1 m. The time of sod facing shall be indicated by the Inspection Committee.

PART 9 FARM ROAD

(a) The farm road shall be constructed by the earth materials which shall be the subsoil under the topsoil near the site. So firstly the topsoil shall be removed and secondly returned after embanckment is over. Each embankment shall be complete by compaction with tire roller every 20cm layers. Surface of the farm road shall be paved by laterite.

(b) The surface of farm road shall be finalized by constructing middle portion of the road higher in height than each side of the road, of which the cross sectional gradient is shown in the drawings.

(c) During the period of construction for farm road, the Contractor will always pay attention on drainage of rain water to prevent the surface of road from becoming muddy.

PART 10 IRRIGATION FACILITIES

10-01 PUMP FACILITIES

(a) Volute pump designated in the drawings will be prepared by the Contractor. The Contractor shall furnish all labour, materials, equipment and incidentals required for installation of the pumps, fittings and appurtenances as shown on the drawings and/or directed by the Inspection Committee. The fittings are shown as a convenience for the Contractor. It may be necessary to supply and install additional fittings other than those shown on the drawings or to install fittings in different locations. Work to be done shall include hauling, installing, jointing and all other works necessary to produce completed facilities.

(b) The Contractor shall furnish and install pump house, electric wiring, control panel, pipes, couplings, fittings, gaskets, flanges, bolts, nuts and all other materials necessary to properly install the works shown on the drawings and as specified.

(c) These facilities shall be strictly in accordance with the manufacture's technical data and printed instruction and permitted by the Inspection Committee. For all kinds of earth works required for the works, the specification for earth and foundation works shall be applied.

10-02 PIPE WORK

10-02-1 General

The Contractor shall install all piping and fittings as specified herein and shown on the Drawings or as directed by the Inspection Committee

The intention of the Specifications is to cover all types of pipe. Any pipe of a material not specifically mentioned in this Chapter shall be installed in the same manner as the closest listed pipe.

10-02-2 Installation of Pipe Underground

(1) General

Proper instruments, tools, and facilities satisfactory to the Inspection Committee shall be provided and used by the Contractor for the safe and convenient performance of the work. All pipe, fittings, and valves shall be carefully put into the trench piece by piece by suitable tools or equipment, in such manner as to prevent pipe and protective coatings from damage. Under no circumstances shall pipe and other materials be dropped or dumped into the trench.

(2) Inspection before Installation

All pipe and fittings shall be carefully examined for cracks and other defects while suspended above the trench immediately before installation in final position.

(3) Cleaning of Pipe and Fittings

All lumps, blisters, and excess coating shall be removed from the end of each pipe. The outside of the joint end and the inside of the joint shall be wiped clean, dry and free from oil and grease before the pipe is laid.

(4) Laying of Pipe

Every precaution shall be taken to prevent foreign material from entering the pipe while it is being placed in the line. During laying operations, no debris, tools, clothing, or other materials shall be placed in the pipe.

The pipe shall be secured in place with approved backfill material tamped under it except at the joint. Precautions shall be taken to prevent dirt from entering the joint space.

At times when pipe laying is not in progress, the open ends of pipe shall be closed.

(5) Cutting of Pipe

The cutting of pipe for inserting tees or valves shall be done in a neat and workmanlike manner without damage to the pipe.

(6) Installation and Connection

a) Installation of pipe shall be carefully conducted so as not to be concussed pipe.

b) As for means of connection between steel pipes, screwed type socket or welding connection shall be basically adopted for the pipe with less than 150 mm diameter, and more than 200 mm diameter, respectively. However, welding connection may be adopted even for the pipe less than 150 mm diameter with the Inspection Committee's approval.

c) Welded surface of pipe shall be kept clean avoiding adhesion of refuse, soil, etc. and shall be painted by zinc coating approved by the Inspection Committee.

10-02-3 Filling Water-Test

After completion of installation of pipe and backfilling, filling water test shall be taken in each certain interval, in order to ensure the leakage of water within allowable range.

Testing pressure shall be taken by normal design water pressure at the site, and 25 lit/day per 1 km length and 1 cm diameter of pipe shall be set up as a standard.

10-02-4 Installation of Valves and Accessories

The valves, taps, accessories, stoppers and caps shall be placed and assembled to the pipeline in the above specified way for pipeline cleaning and laying, and as shown on the drawings. The tap placement shall be approved by the Inspection Committee.

10-03 WATER TANK

The water tank shall be constructed by reinforced concrete, especially free from water leakage, on the place as shown in the drawings and the elevation of its bottom will be specified in the drawings. Water level in the tank will be automatically controled by the electrodes. Specification of concrete work shall be indicated in Part 6.

PART 11 RUN-OFF PLOTS

Run-off Plots shall be constructed at the locations shown on the drawings or as directed by the Inspection Committee.

Gradient of the part of run-off passage in the flame will have two kinds: one is 3 degree and another is 5 degree. It depends on the direction of the Inspection Committee which gradient shall the Contractor choose in process of construction.

PART 12 FINISHING OF FIELD

The Contractor shall execute finishing of the field after all earth moving works have been over. Finishing of the field involves levelling the small uneven part of the field face and spreading the spoiled soil on the field. It does not mean to modify the natural gradient of the field by cutting and banking the soil.

PART 13 BUILDING WORK

13-01 GENERAL

(1) This Part shall cover the construction work of the Demonstration Farm Facilities proposed at Khao Suan Kwang.

(2) Prior to commencement of any building work of the farm facilities and pump house, the Contractor shall provide and furnish shop drawings for the Inspection Committee's approval. The shop drawings shall include temporary works and dimension of structures in accordance with the Drawings and Specifications provided hereinafter.

(3) The Contractor shall provide all labor, plant, materials, tools and equipment and other facilities necessary to complete all operations under this division including excavation, backfilling, filling, and grading in accordance with the Drawings and as specified herein or as directed by the Inspection Committee.

(4) Stakes and Batter Boards

1) Stake out the building accurately and establish grade lines as shown on the Drawings or as directed by the Inspection Committee.

2) Erect batter boards and basic references as directed by the Inspection Committee at such places where they will not be disturbed during construction.

3) Storage of materials and work shall be conducted in such a manner as to preserve all reference marks set by the Contractor. The Contractor shall re-establish all lines and grade that get dislocated at his expense.

4) The Contractor shall construct two (2) permanent bench marks of previously known elevation near or within the site of construction for the purpose of determining any settlements that may occur during the progress of construction.

13-02 EARTH WORK

13-02-1 Excavation

(1) The Contractor shall make all necessary excavations for foundations to grades indicated on the approved drawings. Excavations shall include levelling the bottom of the footing, compacting and tamping of same.

(2) Excavate rock, earth and other materials of every nature, or description encountered in obtaining indicated lines and grades, which, in the Inspection Committee's opinion can be loosened, removed by hand with hand tools or power shovels.

(3) The Contractor shall excavate all trenches to a neat size, levelled to a line at the bottom ready to receive foundations. Remove all loose rock, dirt and debris prior to pouring concrete.

(4) No footing shall rest on fill. Where excavations reveal that footing will rest on fill, the Contractor shall carry excavations deeper until desired stratum is reached for safe bearing power of soil.

(5) Make all excavations with proper allowance for floor slabs, forms and centers. Bottom of foundations shall be approximately level and clear of loose materials and lower sections true to size.

(6) If the required bearing power is not obtained at the excavation, the excavation shall be continued until such safe bearing power is obtained, with piers and walls being lengthened accordingly to suit the conditions for which the Contractor shall be paid at the unit price bid for excavation.

(7) When the nature of soil is such that foot bearing (safe bearing) is found to exist at higher grades than indicated sub-grades, the Inspection Committee may decide to stop excavation work at these levels, but request should be done by writing.

(8) Where walls or footings are to be poured without forms, trench sides shall be sharp and true.

13-02-2 Backfilling

(1) Use all suitable materials removed from excavation, including materials from suppliers, insofar as practicable, in the formation of backfills.

(2) Deposit no excavated material at any time in any manner that may endanger a partly finished structure by direct pressure, by overloading bands contiguous to the operations, or in any other way detrimental to the completed work.

(3) After forms have been removed from footings, piers, foundation walls, etc., and when concrete work is hard enough to resist pressure resulting from fill, the materials from excavations shall be used for backfilling around them in horizontal layers not exceeding 15 cm with each layer being thoroughly compacted and rammed by wetting.

13-02-3 Filling

(1) Use filling material suitable for structural earthfilling work as mentioned in the proceeding Part 5.

(2) Provide granular fill beneath all concrete building slabs on grade. Granular fill shall be clean crushed stone or gravel placed to a depth of 10 - 20 cm.

13-02-4 Disposal of Waste Materials

All excess waste and other unused excavated materials shall be used for site grading or levelling if required by the Inspection Committee, and shall not be removed from the Site without approval of the Inspection Committee. Surplus materials except used for above mentioned shall be disposed to the spoil bank as directed by the Inspection Committee.

13-03 REINFORCED CONCRETE WORK

13-03-1 General

All reinforced concrete work shall be completed as shown on the Drawings and as specified herein.

13-03-2 Concrete

(1) Concrete shall consist of Portland Cement, fine aggregates, coarse aggregate, water, and where specified admixtures; proportioned, mixed, placed, cured and finished as specified in the preceding Part 6 " Concrete Work ".

(2) Miscellaneous:

1) Shop drawings or form work, where required by the Inspection committee, shall be submitted for approval before fabrication and erection of such formwork.

2) Provide temporary openings where necessary to facilitate cleaning and inspection immediately before depositing concrete.

3) Side forms of footing may be omitted and concrete placed against the neat excavation only when approved by the Inspection Committee and when an appropriate credit is allowed.

4) All exposed corners shall be square. Exercise due care while stripping forms and protect corners subsequently against chipping or other damage by approved means.

5) Always provide continuous vertical supports for formwork directly below any pour line.

6) On completion of the work under this divisions, the Contractor shall clean down all exposed concrete work and remove from the premises form-lumber, cement sacks, and other debris caused by this work.

13-04 SCOPE OF WORK

13-04-1 General

(1) All work described herein shall be governed by Thailand codes besides standards mentioned in other Part.

(2) Submit to the Inspection Committee for approval, all shop drawings prior to fabrication. Any material fabricated before final approval of the shop drawings will be done at the risk of the Contractor.

(3) The Contractor shall be responsible for the correct fitting of all structural members and for the elevation and alignment of the finished structure.

(4) Substitutions of sections or modifications of details shall be made only when approved by the Inspection Committee, and at no additional cost to the JICA.

13-04-2 Materials

(1) Structural Steel, welding electrodes, bolt and nut, etc. shall be governed by Thailand codes.

(2) Paint: Prime coat shall be iron oxide or red lead paint

(3) Grout: Portland Cement and sand mixed in the proportion of 1:2 by volume

13-04-3 Fabrication

(1) Material shall be properly match-marked where field assembly is required

(2) Connections and details not shown but necessary to develop member or joint are subject to the Inspection Committee's approval.

(3) Welding shall be done by the shielded arc method in accordance with the applicable standard and code.

Sequence of welding in assembling built-up sections shall be such that warping of the finished product is prevented or jigs shall be used to achieve the same purpose. Welded connections of equal value may be substituted for riveted or bolted connections if not shown on the Drawings, subject to the Inspection Committee's approval.

(4) Unfinished bolts shall be used for field connections. Lock washers shall be used under all nuts.

(5) All structural steel members shall be thoroughly cleaned, with all rust and mill scale removed and shall received one prime coat of paint before delivery. Unpainted areas left to preserve shop marks will not be permitted. After erection, all abrasions, rivets and bolt heads, and surfaces left unpainted for welding shall be painted with one prime coat of paint.

13-04-4 Inspection

(1) Provide access to places where materials are being fabricated or produced for the purpose of inspection.

(2) The Inspection Committee reserves the right to reject any materials at anytime before final acceptance which does not conform to all of the requirement of the approved drawings and specifications.

(3) The Contractor shall engage the services of an approved testing laboratory at his expense to perform any required tests and shall submit 3 copies of all reports to the Inspection Committee. Correct measures, including additional and more complete testing which may result from these test shall be the responsibility of the Contractor.

(4) All welds shall be visually inspected prior to painting. Unless otherwise noted, individual members of the structure shall be levelled and plumbed to an accuracy of 1 to 500. Drift pins shall not be used to enlarge unfair holes in main material. Holes that must be enlarged to admit bolts shall be reamed.

(5) Burning and drifting may be used to align unfair holes in secondary bracing members only upon approval of the Inspection Committee.

(6) Upon completion of erection and before final acceptance, the Contractor shall remove all falsework, rubbish and waste material.

13-04-5 Erection

(1) The Contractor shall completely outline a proposed method and sequence of erection to the Inspection Committee for approval before delivery of any material to the jobsite. The outline shall be prepared to avoid delay of and damage to the work of other trades.

(2) Temporary bracing and guy lines shall be provided to adequately protect all persons and property to insure proper alignment.

(3) The Contractor shall be responsible for the accurate setting and levelling of all bearing plates or setting plates. Bearing plates or setting plates shall be levelled on steel wedges or shims or as otherwise detailed and then grouted in place before erection of structural members.

13-05 CEMENT AND MASONRY WORKS (Architectural Works)

13-05-1 General

(1) The works include concrete masonry unit work, completed with cement plaster finish.

(2) The following are specifically included under this section:

1) All concrete hollow block curtain walls including mortar filling.

2) Setting and incorporating into masonry bolts, anchors, metal attachments, pipe sleeves, inserts, frames for openings in masonry, and other divisions, and the location of which are shown in the Drawings and included in said other divisions.

3) Chiselling, grouting, joint fillers.

4) All cement plaster finishes for floors, walls, and ceiling indicated on the approved Drawings.

5) Protective measures for the prevention of damage of completed masonry and other work.

6) Removal of dirt, stain, etc., from finished masonry surfaces.

13-05-2 Materials

(1) All materials necessary for the work such as Portland Cement, sand, gravel and water, shall conform to the specifications under Part 6.

13-05-3 Mortar

(1) All cement mortar shall be one (1) part Portland cement and two (2) parts sand by volume, but not more than 1:3 by volume.

(2) Positive measuring methods shall be agreed upon for all cementing materials and aggregates. The aggregates shall be introduced and mixed uniformly throughout the mass after which are granulated and mixed further until a mortar of the plasticity necessary for the intended purpose is obtained. Mortar shall be used so that it will be in place before the initial setting of the cement has taken place.

(3) No mortar containing Portland cement shall be re-mixed or retempered after one (1) hour, except as specified for repainting.

(4) The material and compound for waterproofing and damproofing plaster and the location where to be applied shall be approved by the Inspection Committee.

13-05-4 Concrete Hollow Blocks and Brick

(1) The load bearing concrete hollow blocks (CHB) shall have a minimum compressive strength of 70 kg/sq.cm for the individual unit respectively; all based on gross area. All bricks shall be the first class unless otherwise directed by the Inspection Committee.

(2) All units shall be sound and free from cracks or other defects that would interfere with the proper placing of the unit or impair the strength or performance of the construction.

(3) Sampling:

1) Specimens shall be representative of the whole lot of units from which they are selected. If test specimens are selected at the site of work, units for moisture content tests shall be taken within 48 hours after delivery.

2) In sampling the blocks for the strength, absorption and moisture determination, ten (10) individual units shall be selected. Provided, however, that in the case of the non-load bearing type of CHB or brick, three (3) samples for tests shall be required.

(4) Testing:

The units shall be selected in accordance with Thailand or other applicable standard. No blocks shall be used unless results of tests are known and duly approved by the Inspection Committee.

(5) Rejection:

In case the shipment of units fails to conform to the requirements, the manufacturer may sort it and new specimens shall be selected again at random from the retained lot and tested at the expense of the Contractor . In case the second set of specimens fails to conform to the test requirements, the entire lot shall be rejected.

13-05-5 Laying of Blocks and Brick

(1) Wet CHB thoroughly before using. The first row of blocks must be thoroughly anchored to the concrete walls, columns or slabs. Courses shall be laid straight and uniform with regular running bond and with vertical faces truly vertical, plumb, true to line with level, and accurately spaced.

(2) All horizontal and vertical reinforcing bars shall be anchored 20 diameters into the concrete walls, column and slabs. Dowel bars properly spaced shall be placed into the walls, columns or slabs during pouring and hooked to the vertical bars, leaving another 20 diameter exposed to splice with the reinforcing bars of the CHB walls during construction.

(3) Unless otherwise specified or detailed on the plans, horizontal and vertical joints shall be 3/8" (0.94 cm) thick. Joints shall be solidly filled from the face of the blocks to the depth of the face pointing where necessary to completely and compactly fill the joints. Reinforcement will consist of 3/8" (0.94 cm) ø at 0.60 m vertical bars (or at every other block) and 3/8" (0.94 cm) ø horizontal bars every third course for both, 4" (10 cm) and 6" (15 cm) walls. Block cells with reinforcement shall be solidly filled with cement mortar grout.

(4) The Contractor shall leave the work clean and in perfect condition removing all incidental rubbish. Keep floor dry as possible during laying of CHB and mortar plastering operations and protection from plaster dropping.

(5) The brick work shall be carried out in the same manner and workmanship specified hereabove or as directed by the Inspection Committee.

13-06 CARPENTRY AND JOINERY

13-06-1 Scope of Work

The work includes carpentry and joinery work.

13-06-2 General Requirements

(1) Quality of Lumber:

Lumber shall be of the best grade available, well-seasoned, thoroughly dry and free from loose or unsound knots, cup shakes or other imperfections that will impair strength, durability or appearance. Exposed surfaces shall be smooth unless otherwise indicated or specified.

(2) Protection and Storage

Protect lumber from dampness during and after delivery at the site. Lumber shall be delivered to the site at least 30 days before use, immediately piled in stack in such a manner as to provide air circulation around surfaces of each piece to ensure thorough air seasoning. Stacks shall be covered with well ventilated sheds and enough protection from driving rain.

13-06-3 Rough Carpentry

(1) Work shall be well fitted, accurately set, and rigidly secured in place. Anchors and bolts (with nuts and washers), straps and tie rods shall be provided as required.

(2) Framing and structural lumber shall be well-seasoned, straight, square-edge stacks and free from defects that will impair its strength.

(3) Plates for walls and partitions shall be of the same width as the studs.

(4) Lumber surfaces in contact with concrete or masonry shall be given two (2) brush coats of bituminous paint.

13-06-4 Joinery Work

(1) Lumber used for joinery work shall be of the kinds specified and shall be of contours, patterns, and profile as indicated.

(2) Joints shall be made as per approved drawing, installed tight and securely fastened. Exterior joints shall be mitered and interior angles coped. Panels shall be fitted to allow for shrinkages, avoid swelling and insure that the work shall remain in place without warping, splitting and opening of joints.

(3) Interior trims shall be of approved standard stuck-moulding except where special patterns or profiles are indicated in the approved drawings.

(4) Joints for cabinet work shall be glued aside from nails or other fastening devise required. Nailing shall be concealed where practicable.

(5) Exposed surfaces shall be machined or hand sanded to an even smooth surface, ready for finish. No hammer marks or other unsightly marks shall be allowed on wood panel or veneer.

13-06-5 Materials

Locally available lumber, plywood, glue, etc. can be acceptable after getting approval of the Inspection Committee.

13-07 OTHERS

13-07-1 Plumbing and Sewerage Works

The Work includes all necessary plumbing and sewerage works including septic tank in accordance with the working drawings submitted to and approved by the Inspection Committee.

13-07-2 Duct and Other Works

The Work includes duct for electric cable and drain, additional floor concrete to bury thereof and all other relevant works on the floor of the pump house, etc. in accordance with the working drawings submitted to and approved by the Inspection Committee.

อากรแสตมป์ ๕ บาท อากรแสตมป์ ๕ บาท

13 ก.ย. 2534

ORIGINAL

ธนาคารกรุงเทพ จำกัด

No 164659

ที่ บป.ค.43/2534

หนังสือสัญญาค้ำประกัน ของ ธนาคารกรุงเทพ จำกัด สาขา บ้านบึง

วันที่ 13 กันยายน 2534

ข้าพเจ้า ธนาคารกรุงเทพ จำกัด สาขา บ้านบึง
สำนักงานเลขที่ 340/26-29 หมู่ที่ 1 ตำบลบ้านบึง อำเภอบ้านบึง จังหวัดชลบุรี
ทำหนังสือสัญญาค้ำประกันฉบับนี้ให้ไว้แก่ องค์การ JAPAN INTERNATIONAL COOPERATION AGENCY
มีข้อความดังกล่าวต่อไปนี้

ข้อ 1. ตามที่ บริษัท สุวลี จำกัด ได้ทำสัญญารับจ้างก่อสร้างศูนย์สาธิตการเกษตร ฉ. โครงการพัฒนาการเกษตร ภาคตะวันออกเฉียงเหนือ----------

ซึ่งในการนี้จำเป็นต้องมีหนังสือรับรองของธนาคารค้ำประกัน บริษัท สุวลี จำกัด

ข้อ 2. โดยหนังสือสัญญาค้ำประกันฉบับนี้ ธนาคารกรุงเทพ จำกัด สาขา บ้านบึง ขอรับรองว่า ในกรณีที่ องค์การ JAPAN INTERNATIONAL COOPERATION AGENCY มีสิทธิที่จะได้รับเงินดังกล่าวในข้อ 1. ได้แล้ว หาก บริษัท สุวลี จำกัด ไม่สามารถชำระเงินให้ธนาคารกรุงเทพ จำกัด สาขา บ้านบึง ตกลงจะชำระเงินแทนให้จำนวนไม่เกิน -7๗0,000.00-บาท (-เจ็ดแสนสี่หมื่นบาทถ้วน-)
แก่ องค์การ JAPAN INTERNATIONAL COOPERATION AGENCY

หนังสือสัญญาค้ำประกันฉบับนี้ มีผลใช้บังคับได้ตั้งแต่วันที่ 13 กันยายน 2534 เป็นต้นไป และสิ้นสุดลงในวันที่ 13 มีนาคม 2535

หากพ้นกำหนดเวลาดังกล่าว ธนาคารกรุงเทพ จำกัด สาขา บ้านบึง ไม่รับผิดชอบใด ๆ ทั้งสิ้น

เพื่อเป็นหลักฐาน จึงได้ลงนามและประทับตราสำคัญของธนาคารไว้ต่อหน้าพยาน

ลงชื่อ (นายวีรวัฒน์ ศรีนพรัตนกุล) (นายกัชรพล พุทธารี) ผู้ค้ำประกัน

การติดต่อกับธนาคารเกี่ยวกับหนังสือสัญญาค้ำประกันรายนี้ โปรดอ้างเลขที่ข้างบนนี้ด้วยทุกครา

(นางโรจนา ปรีชาเดช) พยาน

(นายศิริพงษ์ จันทิมางกูร) พยาน

แบบ ข.

SFKL 011 (75,000ฉ5/985) ; K. 18 (1)

PLEDGE AGREEMENT

To the Japan International Cooperation Agency, Thailand Office
Date September 10th, 1991

We Suvalee Co.,Ltd., the Contractor hereby agree that all equipment, materials and supplies brought to the job site under this Contract made with the JICA dated on September 10th, 1991, shall be pledged by us with the JICA as security for our execution of Works, and shall not be removed at any time without prior approval of the JICA in writting.

We further agree that should there be any loss or damage to pledged equipment, materials and supplies kept at the job site, the JICA shall bear no responsibility whatsoever for such loss or damage.



Name
Title
Firm's Name Suvalee Co.,Ltd.
Firm's Address 11 3 Moo 1 Sukhomvit Rd, Muan, Chonburi, 20000

No. 1493/3H

September 11th, 1991

Mr. Chaiwat Walhanakul
President
Khon Kaen Vissavaphan
425-427 Thaparug Road
Amphur Muang, Khon Kaen

Dear sir:

It is to inform you that your proposal which was submitted on September 5th, 1991, was not regretably adopted for the Construction Work of the Demonstration Farm on the Agricultural Research Project Phase II.

Thank you for your attention to this matter.

Sincerely yours,

Nobuji ABE
Resident Representative
Japan International Cooperation Agency
Thailand Office

JAPAN INTERNATIONAL COOPERATION AGENCY (JICA)
THAILAND OFFICE
1674/1 NEW PETCHBURI ROAD BANGKOK 10310 THAILAND
TEL.: 251-4462-3, 251-1655, 251-2450 FAX : (02) 255-3725

No. 1508/3H September 10, 1991

Mr. Wisuthi Amaritsut
Director
Agricultural Development Research Center
in Northeast Thailand
Khon Kaen 40000

Dear Sir:

It is honour to inform you that the Contract for the construction of the Pilot Infrastructure Improvement Works on the Agricultural Development Research Project Phase II in Northeast Thailand is agreed between the JICA Thailand Office and the Contractor, Suvalee Co.,Ltd., and it is carried on schedule from September 16th, 1991, to February 28th, 1992..

In accordance with the Contract, the Inspection Committee will be established with the function and composition as referred to the attached paper. For the effective and successful implementation of the construction works, the Inspection Committee will bear responsibility for supervising and controlling of the construction works.

Your kind cooperation will be highly appreciated.

Sincerely yours,

Nobuji ABE
Resident Representative
Japan International Cooperation Agency
Thailand Office

CC : Dr. Torao GOTO
Mr. Kazuhiko OTANI
Mr. Kasem Chompoonutprapa
Mr. Yoshinori GOTO

MEMBERS LIST
OF
INSPECTION COMMITTEE

NAME	PRESENT POSITION
1. Dr. Torao GOTO	Project Leader Agricultural Development Research Project
2. Mr. Wisuthi Amaritsut	Director Agricultural Development Research Center in Northeast Thailand
3. Mr. Kazuhiko OTANI	Project Coordinator Agricultural Development Research Project
4. Mr. Kasem Chompoonutprapa	Deputy Director Agricultural Development Research Center in Northeast Thailand
5. Mr. Yoshinori GOTO	Supervisor JICA Expert

No. 1

第　号　土壌侵蝕測定試験枠　工事費明細書

金　800,000　B

内　訳

項　目	員　数	単位	単価B	金額B	摘　要
I. 直接工事費					
1. 試験枠					
1-1. 試験枠(Res)	12	基	30740	368.880	ℓ=40m
-2. 試験枠(Demo)	6	基	38.076	228.456	ℓ=60m
小計				597.336	
2. 土工事					
掘削	2.800	m^3	22.7	63.560	
締固め	2.800	m^3	12.9	34.440	
テラテラ仆敷均し	60	m^3	100	6,000	
法面保護工	600	m^2	50.9	30,540	
小計				134.540	
計				731.876	
II. 諸経費					
				73.188	(10%)
合計				805.064	
				≒	800.000

コピー15D (52×36)

第　号 試験枠(ReS) 1基当り 工事費明細書

金　30,740 B

内訳

項目	員数	単位	単価B	金額B	摘要
1, コンクリートブロック積工					
コンクリートブロック	10.9	m^2	220	2,398	390×190×90
鉄筋 φ10	72.6	kg	21	885	
コンクリート	0.4	m^3	1,460	584	
基礎栗石	0.4	m^3	586	234	
捨型枠	7.1	m^2	200	1,420	
小計				5,531	
2, 集水部					
コンクリート	0.7	m^3	1,460	1,022	
基礎栗石	0.7	m^3	586	410	
捨型枠	0.6	m^2	200	120	
防水モルタル	12.4	m^2	75	930	内壁,底盤
土分流せき	1	式	414	414	プレート t=3mm
整流板	1	式	177	177	アクリルボード
屋根	1	式	1,800	1,800	亜鉛鉄板 t=0.3mm
柱,梁	1	式	620	620	L-70×40×5
排水孔	1	個所	100	100	P.V.C. φ50
小計				5593	

ヨコピー150 (52×36)

項目	員数	単位	単価B	金額B	摘要
3. 計量部					
排水管	4.5	m	171	770	PVC. φ100
排水管L型	1	個	345	316	PVC. φ100
コンクリート管	3	本	1,258	3,775	φ1.2m ℓ=1.0m
コンクリート	1.2	m³	1,460	1,752	
基礎栗石	1.2	m³	586	703	
捨型枠	3.9	m²	200	780	
蓋	3	個	400	1,200	亜鉛鉄板 t=0.3mm
分流管	2	個	1,050	2,100	亜鉛鉄板 t=0.3mm
排水栓	3	個	100	300	PVC φ50
小計				11,696	
4. 圃場部					
亜鉛鉄板 t=0.3mm	36	枚	94	3384	2.4m×0.65m
サビ止め塗料	56	m²	15	840	
ポール	35	個	105.6	3,696	
小計				7,920	
合計				30,740	

第　号 試験杭(Demo)堪当 工事費明細書

金 38,076 B

内訳

項目	員数	単位	単価B	金額B	摘要
1. コンクリートブロック積工					
コンクリートブロック	12.2	m²	220	2,684	390×190×90
鉄筋 φ10	47.1	KB	21	989	
コンクリート	0.4	m³	1,460	584	
基礎栗石	0.4	m³	586	234	
捨型枠	8.1	m²	200	1,620	
小計				6,111	
2. 集水部					
コンクリート	1.2	m³	1,460	1,752	
基礎栗石	1.2	m³	586	703	
捨型枠	0.7	m²	200	140	
防水モルタル	18.7	m²	75	1,403	内壁,底盤
〃分流せき	1	式	444	444	プレート t=3mm
整流板	1	式	552	552	アクリルボード
屋根	1	式	2,400	2,400	亜鉛鉄板 t=0.3mm
柱,梁	1	式	729	729	L-40×40×5
排水孔	1	個所	100	100	
小計				8,223	

ヲ コピー15D (52×36)

資料 3-13

CONTRACT

CONSTUCTION WORK OF THE SOIL EROSION PLOT

IN THE DEMONSTRATION FARM

ON THE AGRICULTURAL DEVELOPMENT PROJECT

PHASE II

IN

NORTH-EAST THAILAND

This Contract is executed on the 26th day of December 1991 at the Japan International Cooperation Agency, Thailand Office between

Mr. Nobuji ABE, Resident Representative, as its authorized representative of the Japan International Cooperation Agency, Thailand Office, hereinafter referred to as " the JICA " of the one part, and

(Company's Name) Suvalee Co., Ltd. whose office is situated at 11/3 Moo 1 Sukhomvit Rd. Muan, Chonburi, 20000 Tel. (038) 275 334-8, represented by Mr. Sutin Prasertchaiwanit, Nationality Thai , Title President ,hereinafter referred to as " the Contractor ", of the other part.

Both parties mutually agree under the terms of this Contract as follows :-

Article 1 Purpose of Agreement and Contract Price

The JICA agrees to employ the Contractor and the Contractor agrees to perform the Works for the Construction work of the Soil Erosion Plot in the Demonstration Farm on the Agricultural Development Research Project Phase II in the North-East Thailand for the total amount of Eight Hundred Thousand Baht (= 800,000 Baht), hereinafter referred to as " Contract Price ".

Article 2 Payment

As the consideration for the Construction to be executed under this contract, JICA shall pay the Contractor an amount of Eight Hundred Thousand Baht (800,000 Baht) within thirty (30) days after the JICA received the Bill issued by the Contractor based on the respective acceptances of the Works by the Inspection Committee. It shall be expressly understood that the payment by the JICA do not mean being released from responsibilities under this Contract.

Article 3 Completion Time

The Contractor agrees to commence the Works at the site

within ten (10) days from the date of signing of this Contract (commencement date) and the Contractor agrees to satisfactorily complete the Works within 60 days (completion time) from the date hereof which will become due on February 28, 1992 (completion date).

If the Contractor fails to commence the Works by the above commencement date, or should in the course of the construction any event occur which may reasonably cause the JICA to believe that the Contractor will not be able to complete the Works on the completion date, or should the Contractor fail to complete the Works by the completion date, or should the Contractor fail to meet any of the Contract requirement, the JICA shall have the right to terminate this Contract by giving written notice to the Contractor.

However, in case that the Contractor fails to complete the Works by the completion date, or to meet any of the Contract requirement, if the Inspection Committee thinks that the Contractor has the ability for completion of the Works within reasonably extended period, the Contractor may be permitted by the JICA to continue the Works beyond the completion date but within the extended time.

Article 4 Penalty

In case that the Contractor is in default as mentioned in Article 3, the Contractor agrees to be responsible to the JICA as follows :-

4.1 In case of the termination by the default of commencement for the Works, the Contractor shall pay a penalty of Eight Hundred Baht (800 Baht) per day counting from the commencement date until the new Contract is completely executed with a new Contractor for this Works, the period of which is included the time spent for finding the new Contractor and executing the new Contract etc.

4.2 In case the JICA thinks that the Contractor will not be able to complete the Works within the completion time and thereby terminates this Contract, the Contractor shall pay a penalty of Eight Hundred Baht (800 Baht) per day counting the number of days in the same manner as prescribed in 4.1 above. However, the JICA may reduce such number of days according to the ratio between the completed Works and the total Works as may be decided by the Inspection committee.

4.3 In case the Contractor fails to complete the Works by the completion date or to meet any Contract requirement, the Contractor shall pay a penalty of Eight Hundred Baht (800 Baht) per day counting from the date following the completion date until the Works satisfactorily completed and accepted by the inspection Committee. However, the JICA may reduce such number of days as prescribed in 4.2 above.

Article 5 Compensation

If the JICA sustains any losses as direct or indirect damages caused by the Contractor's failure, the Contractor shall compensated the JICA for such losses. The parties agree that time is essential for the completion of the Works.

Article 6 Modification

If the Inspection Committee finds it necessary to make modification of construction design and/or materials and so forth during the course of construction, the JICA has the right to order the modification of the Works to the Contractor, and such order shall be made in writing from the Inspection Committee to the Contractor.

For JICA

Japan International Cooperation Agency

Mr. Nobuji ABE

Resident Representative, Thailand Office

Witness

Dr. Torao GOTO
Team Leader
Agricultural Development Research Center in the Northeast Thailand

For Contractor

Suvalee Co., Ltd.

Mr. Sutin Prasertchaiwanit

President

Witness

Mr. Hideo OSAWA
Assistant Resident Representative
Thailand Office
Japan International Cooperation Agency

11/3 หมู่ 1 ซอยศุภมิตร ถ.สุขุมวิท ต.ห้วยกะปิ อ.เมือง
ชลบุรี 20000 โทร.038-275334-8 แฟกซ์ 274337
กรุงเทพฯ 2411122-2410581

SUVALEE CO.,LTD.
11/3 Soi Suphamitr, Sukumvith Rd., Huaykapi, Muang
Chonburi. 20000 Tel. 038-275334-8 Fax. 27433
Bangkok Tel. 2411122-2410581

RUN - OFF PLOT

I. Direct Cost

1. Run - off plot					
1.1 Run - off plot (Rec)	12	pu	30.740	368,880	e = 4.0 m.
2 Rin - off plot (Demo)	6	pc	38.076	228,456	e = 60 m.
Sub - total				597,336	
2. Earth Work					
Excavating (by Machine)	2,800	m^3	22.7	63,560	
Compacting (by tire Roller)	2,800	m^3	12.3	34,440	
Pavement by latcrite	60	m^3	100	6,000	
Protecting Face of Slope	600	m^2	50.9	30,540	
Sub - total				134,540	
Total				731,876	

II Indirect Cost

				73,188	(10%)
Grand - total				805,064	
			=	800,000 ฿	

11/3 หมู่ 1 ซอยศุภมิตร ถ.สุขุมวิท ต.ห้วยกะปิ อ.เมือง
จลบุรี 20000 โทร.038 - 275334 - 8 แฟกซ์ 274337
กรุงเทพฯ 2411122 - 2410581

11/3 Soi Suphamitr, Sukumvith Rd., Huaykapi, Muang
Chonburi. 20000 Tel. 038 - 275334 - 8 Fax. 274337
Bangkok Tel. 2411122 - 2410581

December 10, 1991

Attention : HIDEO OSAWA JICA THAILAND OFFICE

Refer : Construction work of the soil Erosion Plot in the demonstration farm on the Agricultural Development Project phase II

Dear Sirs :

We are pleased to submit you here with the quotation for the construction work of the soil Erosion Plot in the demonstration farm on the Agricultural Development Profect phase II is totally amount Baht 800,000.00 (Eight Hundred Thousand Baht only)

Yours Faithfully

(Mr Tanom Kriengtaweekit)

Enecutive Director

Regional Electricity Generating Authority of Thailand
200 Ngarm-wongwarn Road, Bang Khen (Bangkok 10900)
Telex : 72224 PEABKK TH tel 5890199

No. MT 5335/5671

Regional Electrical Office, Khon Kaen
Kasikorn Thung-sarng, Muang District
Khon Kaen

July 8, 1991

Subject : Informing about expenditure
To : ADRC Director
Re. : A letter No. KS. 0210(ADRC)/446, Date April 25, 1991 about expansion of electricity installation request
Attached: one information in detail and conditions of
document electricity installation

According to the Re. letter, ADRC requested to expand electricity installation at Moo 17th, Kham Sombat Village, Khao Suan Kwang Sub-district, Khao Suan Kwang District, Khon Kaen Province, Regional Electrical office, Khon Kaen already surveyed in detail and made expenditure estimation :

1. Working procedures :

1.1 High power division at out-side area
Pitch one high pressed concrete column sizes 12 m. samline,

1.2 High power division inside area
Pitch 4 high pressed concrete columns size 12 m.,install 3 lines of aluminium with stell axis size(5 sq. mm., lenght is 85m.

1.3 Transformer Division
Pitch a high pressed concrete column sizes 12 m. to make a concrete beam for a 100 KVA transformer installation with 3 phases system 22,000-400/230 V. with a protection set.

1.4 Capacitor Division
Install 2 capacitors size 10,20 DVA.R. 3 phases, 400 V.

1.5 Low power Division
Pitch 20 concrete columns size 9 m. and 1 concrete column sizes 8 m.,install low power aluminium both without electric insulator and with electric insulator, size 50, 70 sq.mm., 3 phases system, total length is 640 m.

1.6 Electricity along the road division
Install an aluminium line with electric insulator sizes 25 sq. mm. total lenght is 64cm., install 11 sets of fluorescense electric lamps along the road, size 2x40 w. with a set of solar-electric control switch sizes 1,000 w.

1.7 Meter Division

Install a demand meter (collecting type) 3 phases system, 4 lines, sizes 4 Am. with CT 500 V. razo 150/5 Am.

2. Expenditure

2.1 Area expansion cost

High power division outside area	13,570.-	baht
High power division inside area	70,643.-	"
Transformer division	121,208.-	"
Capacitor division	10,119.-	baht
Low power division	[220,437.-	"]
Electricity along the road division	[55,207.-	"]
Total	491,184.-	"

2.2 Electric supply fee

fee for electric wiring	7,500	baht
fee for checking	3,000	"
expenditure for proceeding	1,000	"
Total	11,500	"
Grand total	520,684	"

This expenditure amount is validity within 12 months from the date we inform this information. After installation is finished, columns, electric lines and other equipments which are outside ADRC area belong to the Regional Electrical Office. As for columns, electric lines, transformer and other equipments which are in ADRC area belong to ADRC except the main meter and comprised equipments, they belong to Regional Electrical Office as the information and conditions attached herewith.

Your acknowledge is very much appreciated. After your consideration, please inform us about its result for the next proceeding.

Yours sincerely,

sign

(Mr. Sereeroj Phromprakai)
Deputy Manager
Acting for Manager of Regional Electrical Office,
Khon Kaen

Users Service Division
Tel. 236246

構内送電部分 220,437 + 55,207 = 275,644

2.1 に対する 2.2 の比率は

11,500 ÷ 491,184 ≒ 0.0234

∴ 275,644 × 0.0234 = 6,450

∴ 275,644 + 6,450 ≒ 282,000.-

The installation of low electric system at Khao Suan Kwang Demonstration Farm

1. Low electric system

Item	Size	Quantity	Unit Price	Amount (Baht)
-Electric pole	8m.	26	~~2,000~~ 2,500	~~52,000-~~ 65,000
-Elcctric pole	9m	1	~~2,500~~ 2,800	~~2,500-~~ 2,800
-Aluminum line	50m^2	800m.	1m./25Baht	20,000-
-Aluminum line	70m^2	400m.	1m./35Baht	84,000-
-Lag/Ring for holding electric line (Four line system)		~~26~~ sets 27	1set/50Baht	~~1,300-~~ 1,350
				173,150

2. Street light

Item	Size	Quantity	Unit Price	Amount (Baht)
-Electric line	25m^2	800m.	1m./15Baht	12,000-
-Fluorescent lamp	2/40	14sets	1set/750Baht	10,500-
-Installation of switch for electricity control	1,500Watt	1set		3,100-
-Labour for electric pole and electric line installation		~~26~~ 27	1pole/300Baht	~~7,800-~~ 8,100
				33,700

Total amount ~~193,200-~~ 206,850.-

Estimated by Mr. Chaiyawat Wattanakul

การติดตั้งระบบไฟฟ้าแรงต่ำ แปลงทดสอบการอนุรักษ์ดินและน้ำ อำเภอเชาสวนกวาง ศูนย์ต้นน้ำและพัฒนาเกษตรกรรมภาคตะวันออกเฉียงเหนือ

1. ไฟแรงต่ำ

- เสาไฟฟ้าขนาด 8 เมตร จำนวน 26 ต้น ราคาต้นละ 2,500 บาท เป็นเงิน 65,000 บาท
- เสาไฟฟ้าขนาด 9 เมตร จำนวน 1 ต้น ราคาต้นละ 2,000 บาท เป็นเงิน 2,000 บาท
- สายอลูมิเนียมขนาด 50 ตารางเมตร เมตรละ 25 บาท จำนวน 800 เมตร เป็นเงิน 20,000 บาท
- สายอลูมิเนียมขนาด 70 ตารางเมตร เมตรละ 35 บาท จำนวน 2400 เมตร เป็นเงิน 84,000 บาท
- แล็ค # ตุ้มร้อยสาย แบบ 4 สาย จำนวน 28 ชุด ชุดละ 50 บาท เป็นเงิน 1,050 บาท

2. ไฟถนน

- สายไฟขนาด 25 ตารางเมตร ยาว 800 เมตร จำนวน 1 สาย เมตรละ 15 บาท เป็นเงิน 12,000-
- โคมไฟถนนฟลูออเรสเซนต์ขนาด 2 # 40 ราคาชุดละ 750 บาท จำนวน 14 ชุด เป็นเงิน 10,500 -
- ติดตั้งสวิทย์ ควบคุมไฟฟ้าหลังแสง 1500 วัตต์ 1 ชุด เป็นเงิน 3,100 -
- ค่าแรงชุดเสาพาดสาย ต้นละ 300 บาท จำนวน 21 ต้น เป็นเงิน 6,300 -

รวมเป็นเงินทั้งสิ้น 203,950 บาท

(สองแสนสามพันเก้าร้อยห้าสิบบาทถ้วน)

ลงชื่อ ..... ผู้ประเมินราคา

(นายไชยวัฒน์ วัฒนกูล)

資料3-16

AGRICULTURAL DEVELOPMENT RESEARCH
CENTER IN NORTHEAST THAILAND

JICA

Friendship Road
Moe Din Daeng
Amphor Muang
Khon Kaen, 40000
Thailand

Tel. (043) 236224-5
Fax (043) 239851

March 20 '92

後藤義徳 様.

日本技研株式会社.
海外事業本部.

パイロットインフラ整備事業.

カオソンクワン用携帯電話等は、付帯資材として、報告書に入れて下さい。

付帯資材　　カオソンクワン用トラクターアタッチメント、畑地資材等

金額.　　480,000— バーツ

資料 3-17

CONTRACT

CONSTRUCTION WORK OF ELECTRIC WORKS

IN THE DEMONSTRATION FARM

ON THE AGRICULTURAL DEVELOPMENT PROJECT

PHASE II

IN

NORTH-EAST THAILAND

This Contract is executed on 8 November 1991 at the Japan International Cooperation Agency, Thailand Office between

Mr. Nobuji ABE, Resident Representative, as its authorized representative of the Japan International Cooperation Agency, Thailand Office, hereinafter referred to as " the JICA " of the one part, and

(Company's Name) Khon Kaen Visavaphant Ltd., Part. whose office is situated at 317 Ban Thum, Maliwan Road, Amphoe Muang, Khon Kaen 40000 Tel. (043) 236104, 238775, represented by Mr. Chaiwat Watthanakoon, Nationality Thai, Title Manager, hereinafter referred to as " the Contractor ", of the other part.

Both parties mutually agree under the terms of this Contract as follows :-

Article 1 Purpose of Agreement and Contract Price

The JICA agrees to employ the Contractor and the Contractor agrees to perform the Works for the Construction work of the Electric Works in the Demonstration Farm on the Agricultural Development Research Project Phase II in the North-East Thailand for the total amount of Two Hundred Eighty Thousand and Fifty Six Baht(= 280,056 Baht), hereinafter referred to as "Contract Price".

4.1 In case of the termination by the default of commencement for the Works, the Contractor shall pay a penalty of Two Hundred Eighty Baht (280 Baht) per day counting from the commencement date until the new Contract is completely executed with a new Contractor for this Works, the period of which is included the time spent for finding the new Contractor and executing the new Contract etc.

4.2 In case the JICA thinks that the Contractor will not be able to complete the Works within the completion time and thereby terminates this Contract, the Contractor shall pay a penalty of Two Hundred Eighty Baht (280 Baht) per day counting the number of days in the same manner as prescribed in 4.1 above. However, the JICA may reduce such number of days according to the ratio between the completed Works and the total Works as may be decided by the Inspection committee.

4.3 In case the Contractor fails to complete the Works by the completion date or to meet any Contract requirement, the Contractor shall pay a penalty of Two Hundred Eighty Baht (280 Baht) per day counting from the date following the completion date until the Works satisfactorily completed and accepted by the inspection Committee. However, the JICA may reduce such number of days as prescribed in 4.2 above.

Article 5 Compensation

If the JICA sustains any losses as direct or indirect damages caused by the Contractor's failure, the Contractor shall compensated the JICA for such losses. The parties agree that time is essential for the completion of the Works.

Article 6 Modification

If the Inspection Committee finds it necessary to make modification of construction design and/or materials and so forth during the course of construction, the JICA has the right to order the modification of the Works to the Contractor, and such order shall be made in writing from the Inspection Committee to the Contractor.

For JICA
Japan International
Cooperation Agency

Mr. Nobuji ABE

Resident Representative,
Thailand Office

For Contractor
Khon Kaen Visavaphant Ltd., Part.

Mr. Chaiwat Watthanakoon

Manager

Witness

Dr. Torao GOTO
Team Leader
Agricultural Development
Research Center in the
Northeast Thailand

Witness

Mr. Hideo OSAWA
Assistant Resident Representative
Thailand Office
Japan International Cooperation
Agency

KHON KAEN VISAVAPHANT LTD., PART. (236104, 238775)

The installation of low electric system at Khao Suan Kwang demonstration Farm (ADRC). The total length is 850 metres.

1. Low electricity system

Item	Size	Quantity	Unit Price	Amount (Baht)
-Electric pole	$8m_2$	40	2,500-	100,000-
-Aluminum line	$50m_2$	990m.	25-	24,750-
-Aluminum line	$70m^2$	2,970m.	35-	103,950-
-Ring for holding electric line (Four line system)		41sets	50-	2,050-
-Bolt	8"	160	12-	1,920-
-PG Camp		96	12-	1,152-
-Camp for linking a single line		40	35-	1,400-
-Lightning arrester		4sets	500-	2,000-
-Groundtroad/ Heart-Camp/U-Camp	6f.	4sets	190-	760-
-Stay for holding a pole		6sets	900-	5,400-
-Tube for linking a line		30	90-	2,700-
-Insulating tape		2dozen	48-	96-
-Round wire		38m.	6-	528-
-Fluorescent lamp		15sets	750-	11,250-
-Solar-electric control switch 1,300 Watt		1set		3,100-
-Labour work of pitching 40 poles, installing electric lines and stringing stay				19,000-
			Total	280,056-

Estimated by Mr. Somsay Watthanakoun

CONTRACT

CONSTRUCTION WORK OF MISCELLANEOUS WORKS

IN THE DEMONSTRATION FARM

ON THE AGRICULTURAL DEVELOPMENT PROJECT

PHASE II

IN

NORTH-EAST THAILAND

This Contract is executed on the 28 day of February, 1992 at the Japan International Cooperation Agency, Thailand Office between

Mr. Nobuji ABE, Resident Representative, as its authorized representative of the Japan International Cooperation Agency, Thailand Office, hereinafter referred to as " the JICA " of the one part, and

(Company's Name) Suvalee Co., Ltd. whose office is situated at 11/3 Moo 1 Sukhomvit Rd., Muan, Chonburi, 20000 Tel. (038) 275 334-8, represented by Mr. Sutin Prasertchaiwanit, Nationality Thai , Title President ,hereinafter referred to as " the Contractor ", of the other part.

Both parties mutually agree under the terms of this Contract as follows :-

Article 1 Purpose of Agreement and Contract Price

The JICA agrees to employ the Contractor and the Contractor agrees to perform the Works for the Construction work of the Miscellaneous Works in the Demonstration Farm on the Agricultural Development Research Project Phase II in the North-East Thailand for the total amount of Six Hundred Thousand Baht (= 600,000 Baht), hereinafter referred to as " Contract Price ".

Article 2 Payment

As the consideration for the Construction to be executed under this contract, JICA shall pay the Contractor an amount of Six Hundred Thousand Baht (600,000 Baht) within thirty (30) days after the JICA received the Bill issued by the Contractor based on the respective acceptances of the Works by the Inspection Committee. It shall be expressly understood that the payment by the JICA do not mean being released from responsibilities under this Contract.

Article 3 Completion Time

The Contractor agrees to commence the Works at the site within five (5) days from the date of signing of this Contract (commencement date) and the Contractor agrees to satisfactorily complete the Works by March 5, 1992 (completion date).

If the Contractor fails to commence the Works by the above commencement date, or should in the course of the construction any event occur which may reasonably cause the JICA to believe that the Contractor will not be able to complete the Works on the completion date, or should the Contractor fail to complete the Works by the completion date, or should the Contractor fail to meet any of the Contract requirement, the JICA shall have the right to terminate this Contract by giving written notice to the Contractor.

However, in case that the Contractor fails to complete the Works by the completion date, or to meet any of the Contract requirement, if the Inspection Committee thinks that the Contractor has the ability for completion of the Works within reasonably extended period, the Contractor may be permitted by the JICA to continue the Works beyond the completion date but within the extended time.

Article 4 Penalty

In case that the Contractor is in default as mentioned in Article 3, the Contractor agrees to be responsible to the JICA as follows :-

4.1 In case of the termination by the default of commencement for the Works, the Contractor shall pay a penalty of Six Hundred Baht (600 Baht) per day counting from the commencement date until the new Contract is completely executed with a new Contractor for this Works, the period of which is included the time spent for finding the new Contractor and executing the new Contract etc.

4.2 In case the JICA thinks that the Contractor will not be able to complete the Works within the completion time and thereby terminates this Contract, the Contractor shall pay a penalty of Six Hundred Baht (600 Baht) per day counting the number of days in the same manner as prescribed in 4.1 above. However, the JICA may reduce such number of days according to the ratio between the completed Works and the total Works as may be decided by the Inspection committee.

4.3 In case the Contractor fails to complete the Works by the completion date or to meet any Contract requirement, the Contractor shall pay a penalty of Six Hundred Baht (600 Baht) per day counting from the date following the completion date until the Works satisfactorily completed and accepted by the inspection Committee. However, the JICA may reduce such number of days as prescribed in 4.2 above.

Article 5 Compensation

If the JICA sustains any losses as direct or indirect damages caused by the Contractor's failure, the Contractor shall compensated the JICA for such losses. The parties agree that time is essential for the completion of the Works.

Article 6 Modification

If the Inspection Committee finds it necessary to make modification of construction design and/or materials and so forth during the course of construction, the JICA has the right to order the modification of the Works to the Contractor, and such order shall be made in writing from the Inspection Committee to the Contractor.

For JICA

Japan International
Cooperation Agency

For Contractor

Suvalee Co., Ltd.

Mr. Nobuji ABE

Resident Representative,
Thailand Office

Mr. Sutin Prasertchaiwanit

President

Witness

Dr. Torao GOTO
Team Leader
Agricultural Development
Research Center in the
Northeast Thailand

Witness

Mr. Hideo OSAWA
Assistant Resident Representative
Thailand Office
Japan International Cooperation
Agency

採用

บริษัท สุวลี จำกัด

11/3 หมู่ 1 ซอยศุภมิตร ถ.สุขุมวิท ต.ห้วยกะปิ อ.เมือง
จ.ชลบุรี 20000 โทร.038-275334-8 แฟกซ์ 274337
กรุงเทพฯ 2411122-2410581

SUVALEE CO.,LTD.

11/3 Soi Suphamitr, Sukumvith Rd., Huaykapi, Mu
Chonburi. 20000 Tel. 038-275334-8 Fax. 274
Bangkok Tel. 2411122-2410581

February 17, 1992

To : Mr. Hideo Osawa

Refer : Construction work of miscellaneous works in the demonstration farm on the agricultural development project phase 2

Dear Sirs:

We are pleased to submit you here with the quotation for the construction work of miscellaneous works in the demonstration farm on the agricultural development project phase 2. It is totally amount Baht 600,000.00 (Six Hundred Thousand Baht only)

Sincerely yours,

(Mr.Tanom Kriengtaweekit)

Executive Director

Suvalee Co.,Ltd.

Construction work of miscellaneous work in the demonstration farm on the agricultural development project phase 2.

I Direct Cost.

1. Sign board				
Concrete	7.3	m^3	1,650	12,045
Normal form	5.6	m^2	279	1,563
Lean form	2.8	m^2	200	560
Deformed bar	192	kg	21	4,032
Stone	4	m^3	450	1,800
Setting stone	1	Set	10,000	10,000
Steel name	1	Set	20,000	20,000
Sub - total				50,000
2. Base of national flag				
Concrete	7.8	m^3	1,650	12,870
Form	1	Set	300	300
Stone	6	m^3	450	2,700
Setting Stone	1	Set	15,000	15,000
Steel pipe pole	1	Set	3,000	3,000
Sub - total				33,870
3. Name board				
Stainless steel board	1	Set	11,500	11,500
Sub - total				11,500
4. Suspection of traffic				
Suspection of traffic	2	Set	5,000	10,000
Sub - total				10,000
5. Underdrain				
Excavating	120	m^3	76	9,120
Broken stone	120	m^3	300	36,000
brushing stone	26	m^3	587	15,262
Sub - total				60,382
6. Curb				
Concrete curb	300	piece	210	63,000
Sub - total				63,000

7. Finishing of field				
Finishing of field	1	Set	150,000	150,000
Sub - total				150,000
8. Sprinkle pipe				
Sprinkle pipe	1	Set	100,0000	100,000
Sub - total				100,000
9. Water tank				
Water tank	4	Set	5,400	21,600
Sub - total				21,600
Total				500,352
II. Indirect Cost				100,071 (20%)
Grand total				600,423
			=	600,000

UNIT COST of LABOUR

August, 1991

No.	Item	Unit	Perdiem
			Baht
1.	Labour	md	90
2.	Foreman	md	300
3.	Operator (Heavy Equipment)	md	280
4.	Assistant of Operator	md	200
5.	Steel Worker	md	250
6.	Mechanician	md	250
7.	Carpenter	md	250
8.	Masonry	md	250
9.	Driver	md	220

UNIT COST of MATERIALS

August, 1991

No.	Item	Unit	Cost	Remark
			(Baht)	
1.	Aggregate			
	Sand	m^3	280	
	Gravel	m^3	350	
2.	Cobble-stone	m^3	330	
3.	Cement	bag	120	1 bag = 50 kg
4.	Iron Bar	kg	15	
5.	Wire for Binding	kg	25	
6.	Nail	kg	22	
7.	Laterite	m^3	100	
8.	Fuel			
	Gasoline	liter	10.00	
	Diesel	liter	8.00	
9.	Block			
	(90 x 190 x 390)	PC	6.00	
	(70 x 190 x 390)	PC	4.00	
10.	Brick	PC	0.50	
11.	Lumber	m^3	9,200.-	for frame
12.	Timber	m^3	12,400.-	
13.	Plywood	m^2	310.-	thickness 6 mm
14.	Log	m^3	7,500.-	
15.	Wire Mesh	m^2	120.-	space 2", #11
16.	Concrete pipe (ϕ300)	PC	100.-	lit. = 1.0 m
17.	Concrete pipe (ϕ500)	PC	420.-	lit. = 1.0 m
18.	Steel pipe (ϕ800)	m	1,161/6	
19.	PVC pipe (ϕ125)	m	275	
20.	PVC pipe (ϕ100)	m	160	
21.	PVC pipe (ϕ75)	m	112.5	
22.	PVC pipe (ϕ65)	m	90	
23.	PVC pipe (ϕ50)	m	60	

No. 1	UNIT COST OF Excavation by Manpower (Sand with Gravel)			75.2 B/m^3 Calculated by 1 m^3		Explanation
Item	Quantity	Unit	Unit Cost	Cost	Remarks	
1. Workers						
Labour	0.56	md	90	50.4		
Foreman	0.06	md	300	18		
Sub-total				68.4		
2. Temporary Works and Others	10	%		6.8		
Total				75.2		

No. 2

UNIT COST OF

Banking by Manpower

33.8 B/m^3

Calculated by 10 m^3

Explanation

Item	Quantity	Unit	Unit Cost	Cost	Remarks
1. Workers					
Labour	2.55	md	90	229.5	Not include compacting
Foreman	0.26	md	300	78	
Sub-total				307.5	
2. Temporary Works and Others	10	%		30.8	
Total				338.3	
			1 m^3 =	33.8	

No. 3	UNIT COST OF Smoothing Face of Slope (For Banking Slope)			12.7 ₿/m² Calculated by 10 m²		Explanation
Item	Quantity	Unit	Unit Cost	Cost	Remarks	
1. Workers						
Labour	0.95	md	90	85.5	Include tamping	
Foreman	0.1	md	300	30		
Sub-total				115.5		
2. Temporary Works and Others	10	%		11.6		
Total			1m²=12.7	127.1		

No. 3-1

UNIT COST
OF

Smoothing Face of Slope
(For Cutting Slope)

4.2 B/m²

Calculated by 10 m²

Explanation

Item	Quantity	Unit	Unit Cost	Cost	Remarks
1. Workers					
Labour	0.325	md	90	29.3	
Foreman	0.03	md	300	9	
Sub-total				38.3	
2. Temporary Works and Others	10	%		3.8	
Total				42.1	
			1 m² =	4.2	

No. 4	UNIT COST OF Arrangement of Road Face			2.9 ₿/m² Calculated by 100 m²		Explanation
Item	Quantity	Unit	Unit Cost	Cost	Remarks	
1. Workers						
Labour	2.25	md	90	202.5		
Foreman	0.2	md	300	60		
Sub-total				262.5		
2. Temporary Works and Others	10	%		26.3		
Total				288.8		
			1 m² =	2.9		

No. 4-1	UNIT COST OF Spreading by Manpower (for Ballasting)			4.0 ₿/m² Calculated by 100 m²		Explanation
Item	Quantity	Unit	Unit Cost	Cost	Remarks	
1. Workers						
Labour	3.0	md	90	270		
Foreman	0.3	md	300	90		
Sub-total				360		
2. Temporary Works and Others	10	%		36		
Total				396		
			1 m² =	4		

No. 5	UNIT COST OF Back Hilling by Manpower			50.3 ₿/m³ Calculated by 10 m³	Explanation
Item	Quantity	Unit	Unit Cost	Cost	Remarks
1. Workers					
Labour	3.75	md	90	337.5	
Foreman	0.4	md	300	120.-	
Sub-total				457.5	
2. Temporary Works and Others	10	%		45.8	
Total				503.3	
			1 m³ =	50.3	

No. 6	UNIT COST OF Sod Facing			50.9 ฿/m^2 Calculated by 10 m^2		Explanation
Item	Quantity	Unit	Unit Cost	Cost	Remarks	
1. Workers						
Labour	1.7	md	90	153		
Foreman	0.2	md	300	60		
Sub-total				213		
2. Materials						
Sod	10	m^2	25	250		
3. Temporary Works and Others	10	%		46.3		
Total				509.3		
			1 m^2 =	50.9		

No. 7	UNIT COST OF Compacting by Manpower (Compactor 90 kg)			22.5 ฿/m³ Calculated by 10 m³		Explanation
Item	Quantity	Unit	Unit Cost	Cost	Remarks	
1. Workers						
Labour	1.1	md	90	99		
Foreman	0.1	md	300	30		
Sub-total				129		
2. Operation Cost						
Operator	0.15	md	250	37.5		
Fuel	0.75	liter	8.8	6.6		5 lit/day x 0.15
Others	0.15	%		1		
Sub-total				45.1		
3. Depreciation	0.15	d	200	30		200 ฿/day
4. Temporary Works and Others	10	%		20.4		
Total				224.5		
			1 m³ =	22.5		

No. 8	UNIT COST OF Hauling by Manpower				l = 60 m	Explanation
Item	Quantity	Unit	Unit Cost	Cost	Remarks	
1. Sand	0.44	md	90	39.6	per m^3	
2. Gravel	0.54	md	90	48.6	per m^3	
3. Cobble Stone	0.54	md	90	48.6	per m^3	
4. Wood	0.21	md	90	18.9	per m^3	
5. Cement and Others	0.26	md	90	23.4	per ton	

No. 9	UNIT COST OF Reinforced Concrete (Mixed by Portable Mixer)			1,471.5 ₿/m³ Calculated by 10 m³		Explanation
Item	Quantity	Unit	Unit Cost	Cost	Remarks	
1. Materials						
Cement (325 kg/m³)	65	bag	120	7,800		
Hauling cost	3.25	t	23.4	76.1		
Sand	3	m³	280	840		
Hauling cost	3	m³	39.6	118.8		
Aggregate	6.1	m³	350	2,135		
Hauling cost	6.1	m³	48.6	296.5		
Sub-total				11,266.4		
2. Workers						
Labour	3.9	md	90	351		
Foreman	0.4	md	300	120		
Mechanician	2.4	md	250	600		
Sub-total				1,071		
3. Operation Cost						
Fuel (Mixer)	3.3	liter	9.5	31.4		
Others	20	%		6.3		
Fuel (Vibrator)	0.3	liter	9.5	2.9		
Others	20	%		0.6		
Sub-total				41.2		

No. 9 (continued)

UNIT COST OF

Reinforced Concrete
(Mixed by Portable Mixer)

1,471.5 ฿/m^3

Calculated by 10 m^3

Explanation

Item	Quantity	Unit	Unit Cost	Cost	Remarks
4. Depreciation Cost					
Mixer	0.66	d	540	356.4	
Vibrator	0.89	d	68	60.5	
Sub-total				416.9	
5. Temporary Works and Others				1,919.3	(1+2+3+4) x 0.15
Total				14,714.8	
			1 m^3 =	1,471.5	

No. 10	UNIT COST OF Plain Concrete (Mixed by Portable Mixer)			1,345.9 ₿/m^3 Calculated by 10 m^3	Explanation

Item	Quantity	Unit	Unit Cost	Cost	Remarks
1. Materials					
Cement (275 kg/m^3)	55	bag	120	6,600	
Hauling cost	2.75	t	23.4	64.4	
Sand	3	m^3	280	840	
Hauling cost	3	m^3	39.6	118.8	
Aggregate	6.4	m^3	350	2,240	
Hauling cost	6.4	m^3	48.6	311	
Sub-total				10,174.2	
2. Workers				1,071	Refer to No. 9.
3. Operation Cost				41.2	"
4. Depreciation Cost				416.9	"
5. Temporary Works and Others	15	%		1,755.5	(1+2+3+4) x 0.15
Total				13,458.8	
			1 m^3 =	1,345.9	

No. 11	UNIT COST OF Lean-mix Concrete (Mixed by Portable Mixer)			1,161.6 ฿/m^3 Calculated by 10 m^3		Explanation
Item	Quantity	Unit	Unit Cost	Cost	Remarks	
1. Materials						
Cement (200 kg/m^3)	40	bag	120	4,800		
Hauling cost	2.0	t	23.4	46.8		
Sand	3.3	m^3	280	924		
Hauling cost	3.3	m^3	39.6	130.7		
Aggregate	6.7	m^3	350	2,345		
Hauling cost	6.7	m^3	48.6	325.6		
Sub-total				8,572.1		
2. Workers				1,071	Refer to No. 9.	
3. Operation Cost				41.2	"	
4. Depreciation Cost				416.9	"	
5. Temporary Works and Others	15	%		1,515.2	(1+2+3+4) x 0.15	
Total				11,616.4		
			1 m^3 =	1,161.6		

No. 12	UNIT COST OF Mortar (1:3) (Mixed by Manpower)			2,001.0 ฿/m^3 Calculated by 1 m^3		Explanation
Item	Quantity	Unit	Unit Cost	Cost	Remarks	
1. Materials						
Cement	0.53	ton	2,400	1,272		
Hauling cost	0.53	ton	23.4	12.4		
Sand	1.05	m^3	280	294		
Hauling cost	1.05	m^3	39.6	41.6		
Sub-total				1,620		
2. Workers						
Labour	1.0	md	90	90		
Foreman	0.1	md	300	30		
Sub-total				120		
3. Temporary Works and Others	15	%		261		
Total				2,001		

No. 13	UNIT COST OF Processing and Assembling of Reinforced Iron Bar			20.7 ₿/kg Calculated by 1 ton		Explanation
Item	Quantity	Unit	Unit Cost	Cost	Remarks	
1. Materials						
Reinforced I.B.	1.03	ton	15,000	15,450		
Wire for binding	7	kg	25	175		
Sub-total				15,625		
2. Processing and Assembling						
Steel worker	5.9	md	250	1,475		
Labour	5.9	md	90	531		
Foreman	1.2	md	300	360		
Sub-total				2,366		
3. Temporary Works and Others	15	%		2,698.7		
Total				20,689.7		
			1 kg =	20.7		

No. 14	UNIT COST OF Wooden Form			278.6 ฿/m^2 Calculated by 10 m^2	Explanation
Item	**Quantity**	**Unit**	**Unit Cost**	**Cost**	**Remarks**
1. Sheeting					
Wooden plate	0.196	m^3	7,500	396.9	1,470 x 27%
Wooden frame	0.113	m^3	7,500	228.8	847.5 x 27%
Iron nail	3	kg	22	66	
Sub-total				691.7	
2. Support					
Square timber	0.339	m^3	9,200	499	3,118.8 x 16%
Log	0.154	m^3	7,500	184.8	1,155 x 16%
Nail	1.1	kg	22	24.2	
Wire	0.8	kg	25	20	
Oil	1.5	liter	55	82.5	
Sub-total				810.5	
3. Other Materials	3	%		45.1	(1+2) x 0.03
4. Workers					
Carpenter	2.24	md	250	560	
Labour	2.07	md	90	186.3	
Foreman	0.43	md	300	129	
Sub-total				875.3	
5. Temporary Works and Others	15	%		363.4	(1+2+3+4) x 0.15
Total				2,786.0	
			1 m^2 =	278.6	

No. 15	UNIT COST OF Wire Box for Gabionade (Type I)			2,234.7 Bset / Calculated by 1 set	
Item	Quantity	Unit	Unit Cost	Cost	Remarks
1. Workers					
Labour	2.61	md	90	234.9	
Foreman	0.3	md	300	90	
Sub-total				324.9	
2. Materials					
2-1 Wire mesh	6.21	m^2	120	745.2	Space 2" ø3.05 (#11)
Selvedge and binding wire	10	%		74.5	
Sub-sub-total				819.7	
2-2 Cobble stone	0.73	m^3	330	240.9	
Hauling cost	0.73	m^3	48.6	35.5	
Sub-sub-total				276.4	
2-3 Iron bar	3	piece	71.4	214.2	ø25, L = 1.2, loss 3%
PVC pipe	3	piece	84.0	252	ø100, L = 0.5, loss 5%
Mortar	0.028	m^3	2,001.0	56	0.1x 0.1 xπ÷4 x 1.2x3
Sub-sub-total				522.2	
Sub-total				1,618.3	
3. Temporary Works and Others	15	%		291.5	(1+2) x 0.15
Total				2,234.7	

Explanation

Area of wire mesh
0.45 x 0.9 x 2 = 0.81
0.9 x 2.0 x 2 = 3.60
0.45 x 2.0 x 2 = 1.80
Total 6.21 m^2

Capacity of wire box
0.45 x 0.9 x 2.0
= 0.81 m^3

Volume of cobble stone
0.81 x 0.9 = 0.73 m^3

Constructing
of wire box 0.3 md
Setting 1.03 md
Packing stones 1.28 md
Total 2.61 md

No. 16	UNIT COST OF Wire Box for Gabionade (Type II)			2,492.7 ฿/set Calculated by 1 set		Explanation
Item	Quantity	Unit	Unit Cost	Cost	Remarks	
1. Workers						Area of wire mesh
Labour	2.93	md	90	263.7		0.45 x 0.9 x 2 = 0.81
Foreman	0.3	md	300	90		0.9 x 2.4 x 2 = 4.32
Sub-total				353.7		0.45 x 2.4 x 2 = 2.16
						Total 7.29 m^2
2. Materials						Capacity of wire box
2-1 Wire mesh	7.29	m^2	120	874.8	Space 2", ø3.05 (# 11)	0.45 x 0.9 x 2.4
Selvedge and binding wire	10	%		87.5		= 0.972
Sub-sub-total				962.3		
2-2 Cobble stone	0.87	m^3	330	287.1		Volume of cobble stone
Hauling cost	0.87	m^3	48.6	42.3		0.972 x 0.9 = 0.87 m^3
Sub-sub-total				329.4		
2-3 Iron bar	3	piece	71.4	214.2	ø25, L = 1.2, loss 3%	Constructing of
PVC pipe	3	piece	84.0	252	ø100, L = 0.5, loss 5%	wire box 0.3 md
Mortar	0.028	m^3	2,001.0	56	0.1x 0.1 xπ÷4 x 1.2x3	Setting 1.05 md
Sub-sub-total				522.2		Packing stones 1.58 md
Sub-total				1,813.9		Total 2.93 md
3. Temporary Works and Others	15	%		325.1	(1+2) x 0.15	
Total				2,492.7		

No. 17	UNIT COST OF Cobblestones for Bed			586.3 B/m^3 Calculated by 1 m^3	Explanation

Item	Quantity	Unit	Unit Cost	Cost	Remarks
1. Workers					
Labour	0.63	md	90	56.7	
Foreman	0.06	md	300	18	
Sub-total				74.7	
2. Materials					
Cobblestone	1	m^3	330	330	
Gravel	0.2	m^3	350	70	
Hauling cost	1.2	m^3	48.6	58.3	
Sub-total				458.3	
3. Temporary Works and Others	10	%		53.3	
Total				586.3	

No. 18	UNIT COST OF Setting PVC Pipe			12.8 B/m Calculated by 10 pieces (40 m)		Explanation
Item	Quantity	Unit	Unit Cost	Cost	Remarks	
1. Workers						
Piping man	0.4	md	250	100		
Labour	1.75	md	90	157.5		
Foreman	0.2	md	300	60		
Sub-total				317.5		
2. Materials270						
Adhesives	0.55	kg	270	148.5		
3. Temporary Works and Others	10	%		46.6		
Total				512.6		
			1 m =	12.8		

No. 19	UNIT COST OF Setting Steel Pipe			29.3 B/m Calculated by 10 pieces (40 m)		Explanation
Item	Quantity	Unit	Unit Cost	Cost	Remarks	
1. Workers						
Piping man	1.03	md	250	257.5		
Labour	6.48	md	90	583.2		
Foreman	0.75	md	300	225		
Sub-total				1,065.7		
2. Temporary Works and Others	10	%		106.6		
Total				1,172.3		
			1 m =	29.3		

No. 20	UNIT COST OF Masonry			72.6 ₿/m² Calculated by 10 m²		Explanation
Item	Quantity	Unit	Unit Cost	Cost	Remarks	
1. Workers						
Mason	0.6	md	250	150		
Labour	4	md	90	360		
Foreman	0.5	md	300	150		
Sub-total				660		
2. Temporary Works and Others	10	%		66		
Total				726		
			1 m² =	72.6		

No. 21-1	UNIT COST OF Waterproofing Mortar (Thickness 20 mm)			91.0 B/m² Calculated by 10m²		Explanation
Item	Quantity	Unit	Unit Cost	Cost	Remarks	
1. Materials						
Cement	0.12	ton	2,400	288		
Hauling Cost	0.12	"	23.4	2.8		
Sand	0.24	m^3	280	67.2		
Hauling Cost	0.24	"	39.6	9.5		
Waterproof material	3.6	kg	75.0	270		
Sub-total				637.5		
2. Workers						
Plasterer	0.33	md	250	82.5		
Labour	0.51	"	90	45.9		
Forman	0.084	"	300	25.2		
Sub-total				153.6		
3. Temporary Works and Others	15	%		118.7	(1+2) x0.15	
Total				909.8		
			per m^2	91.0		

No. 21-2	UNIT COST OF Pipe Setting Conrete Pipe ϕ1,200			358.4 B/1pc Calculated by 10pc		Explanation
Item	Quantity	Unit	Unit Cost	Cost	Remarks	
1. Workers						
Scaffolding man	3.6	md	250	900		
Labour	16.2	"	90	1,458		
Foreman	3.0	"	300	900		
Sub-total				3,258		
2. Temporary Works and Others	10	%		325.8		
Total				3,583.8		
			per 1pc	358.4		

No. 21-3	UNIT COST OF Pole			105.6 B/1pc Calculated by 1pc		Explanation
Item	Quantity	Unit	Unit Cost	Cost	Remarks	
1. Materials						
Concrete	0.0045	m^3	1,345.9	6.1		
Wooden Form	0.105	m^2	278.6/5	5.9		
Iron Sheet	2.4	kg	30	72	include wages of process	
Sub-total				84		
2. Workers						
Labour	0.1	md	90	9		
Foreman	0.01		300	3		
Sub-total				12		
3. Temporary Works and Others	10	%		9.6		
Total				105.6		

No. 22-1	UNIT COST OF Water Supply Valve (ϕ 25)			1,577.6 ฿/pt	Explanation
Item	Quantity	Unit	Unit Cost	Cost	Remarks
1. Materials					
Concrete Pipe ϕ 300	1	pc	100	100	1 = 0.5m
Concrete	0.06	cum	1,161.6	69.7	
Vertical Pipe ϕ 25	0.8	m	101/4	20	
Tee	1	pc	50	50	50 x 25
Angle Valve	1	pc	750	750	
Adhesive	0.082	kg	270	22.1	
Sub-total				1,011.8	
2. Workers					
Labour	3	md	90	270	
Foreman	0.3	md	300	90	
Sub-total				360	
3. Temporary Works and Others	15	%		205.8	
Total				1,577.6	

No. 22-2	UNIT COST OF Water Supply Valve (ϕ 50)			3,618.6 B/pt		Explanation
Item	Quantity	Unit	Unit Cost	Cost	Remarks	
1. Materials						
Concrete Pipe ϕ 300	1	pc	100	100	l = 0.5m	
Concrete	0.06	cum	1,161.1	69.7		
Vertical Pipe ϕ 50	0.8	m	60	48		
Tee	1	pc	240	240	65 x 50	
Angle Valve	1	pc	2,300	2,300		
Adhesive	0.107	kg	270	28.9		
Sub-total				2,786.6		
2. Workers						
Labour	3	md	90	270		
Foreman	0.3	md	300	90		
Sub-total				360		
3. Temporary works and Others	15	%		472		
Total				3,618.6		

No. 22-3	UNIT COST OF Water Supply Valve (ϕ 65)			5,548.6 ₿/pt		Explanation
Item	Quantity	Unit	Unit Cost	Cost	Remarks	
1. Materials						
Concrete Pipe ϕ 300	1	pc	100	100		
Concrete	0.06	cum	1,161.1	69.7		
Vertical Pipe ϕ 65	0.8	m	90	72		
Tee	1	pc	290	290	75 x 65	
Angle Valve	1	pc	3,900	3,900		
Adhesive	0.123	kg	270	33.2		
Sub-total				4,464.9		
2. Workers						
Labour	3	md	90	270		
Foreman	0.3	md	300	90		
Sub-total				360		
3. Temporary Works and Others	15	%		723.7		
Total				5,548.6		

No. 22-4	UNIT COST OF Water Supply Valve (ϕ 80)			7,571.6 B/pt		Explanation
Item	Quantity	Unit	Unit Cost	Cost	Remarks	
1. Materials						
Concrete Pipe ϕ 300	1	pc	100	100		
Concrete	0.06	cum	1,161.6	69.7		
Vertical Pipe ϕ 80	0.8	m	112.5	90		
Tee	1	pc	420	420	100 x 80	
Angle Valve	1	pc	5,500	5,500		
Adhesive	0.164	kg	270	44.3		
Sub-total				6,224		
2. Workers						
Labour	3	md	90	270		
Foreman	0.3	md	300	90		
Sub-total				360		
3. Temporary Works and Others	15	%		987.6		
Total				7,571.6		

No. 23-1	UNIT COST OF Sand-flash Valve (ϕ 50)			3,666.9 ₿/pt		Explanation
Item	Quantity	Unit	Unit Cost	Cost	Remarks	
1. Materials						
Concrete Pipe ϕ 500	1	m	420	420		
Concrete	0.04	cum	1,161.6	46.5		
Stop Valve ϕ 50	1	pc	2,340	2,340		
Adhesive	0.082	kg	270	22.1		
Sub-total				2,828.6		
2. Workers						
Labour	3	md	90	270		
Foremen	0.3	md	300	90		
Sub-total				360		
3. Temporary Works and Others	15	%		478.3		
Total				3,666.9		

No. 23-2	UNIT COST OF Sand-flash Valve (ϕ 65)			4,333.9 B/pt		Explanation
Item	Quantity	Unit	Unit Cost	Cost	Remarks	
1. Materials						
Concrete Pipe ϕ 500	1	m	420	420		
Concrete	0.04	cum	1,161.6	46.5		
Stop Valve ϕ 65	1	pc	2,920	2,920		
Adhesive	0.082	kg	270	22.1		
Sub-total				3,408.6		
2. Workers						
Labour	3	md	90	270		
Foreman	0.3	md	300	90		
Sub-total				360		
3. Temporary Works and Others	15	%		565.3		
Total				4,333.9		

No. 23-3	UNIT COST OF Sand-flash Valve (ϕ 75)			5,345.9 B/pt	Explanation

Item	Quantity	Unit	Unit Cost	Cost	Remarks
1. Materials					
Concrete Pipe ϕ 500	1	m	420	420	
Concrete	0.04	cum	1,161.6	46.5	
Stop Valve ϕ 75	1	pc	3,800	3,800	
Adhesive	0.082	kg	270	22.1	
Sub-total				4,288.6	
2. Workers					
Labour	3	md	90	270	
Forman	0.3	md	300	90	
Sub-total				360	
3. Temporary Works and Others	15	%		697.3	
Total				5,345.9	

No. 24	UNIT COST OF Drainage by Pump			296.3 ฿/day calculated by 1 day		Explanation
Item	Quantity	Unit	Unit Cost	Cost	Remarks	
1. Gasoline	7.6	lit	10	76		
Others	15	%		11.4		
Sub-total				87.4		
2. Workers						
Labour	0.3	md	90	27		
Mechanician	0.3	md	250	75		
Sub-total				102		
3. Depreciation	1	day		80		
4. Temporary Works and Otheres	10	%		26.9		
Total				296.3		

No. 25-1,2

UNIT COST
OF

Setting Small Valves and Others
(contained transfer cost in the field)

per 10pc

Explanation

Item	Quantity	Unit	Unit Cost	Cost	Remarks
1. φ25m					
1) Piping Man	0.5	md	250	125	
Labour	0.75	md	90	67.5	
Foreman	0.13	md	300	39	
Sub-total				231.5	
2) Temporary Works and Others	10	%		23.2	
Total				254.7	per 1pc=25.5
2. φ50m					
1) Piping Man	0.8	md	250	200	
Labour	1.25	md	90	112.5	
Foreman	0.21	md	300	63	
Sub-total				375.5	
2) Temporary Works and Others	10	%		37.6	
Total				413.1	per 1pc=41.3

No. 26-1,2

UNIT COST
OF

Setting Sluice Valves
(contained transfer cost in the field)

Explanation

Item	Quantity	Unit	Unit Cost	Cost	Remarks
1. φ50mm					
1) Piping Man	0.21	md	250	52.5	
Labour	0.78	md	90	70.2	
Foreman	0.1	md	300	30	
Sub-total				152.7	
2) Temporary Works and Others	10	%		15.3	
Total				168	
2. φ65mm					
1) Piping Man	0.22	md	250	55	
Labour	0.81	md	90	72.9	
Foreman	0.1	md	300	30	
Sub-total				157.9	
2) Temporary Works and Others	10	%		15.8	
Total				173.7	

No.26-3,4 (continued)

Explanation

Item	Quantity	Unit	Unit Cost	Cost	Remarks
3. φ75mm					
1) Piping Man	0.23	md	250	57.5	
Labour	0.85	md	90	76.5	
Foreman	0.11	md	300	33	
Sub-total				167	
2) Temporary Works and Others	10	%		16.7	
Total				183.7	
4. φ80mm					
1) Piping Man	0.24	md	250	60	
Labour	0.89	md	90	80.1	
Foreman	0.11	md	300	33	
Sub-total				173.1	
2) Temporary Works and Others	10	%		17.3	
Total				190.4	

No.26-5,6 (continued)

Explanation

Item	Quantity	Unit	Unit Cost	Cost	Remarks
5. φ100mm					
1) Piping Man	0.25	md	250	62.5	
Labour	0.93	md	90	83.7	
Foreman	0.12	md	300	36.0	
Sub-total				182.2	
2) Temporary Works and Others	10	%		18.2	
Total				200.4	
6. φ125mm					
1) Piping Man	0.26	md	250	65.0	
Labour	1.0	md	90	90.0	
Foreman	0.13	md	300	39.0	
Sub-total				194.0	
2) Temporary Works and Others	10	%		19.4	
Total				213.4	

No. 27-1,2

UNIT COST
OF

Setting Joint of T-type, Y-type, Reducer, etc.
(contained transfer cost in the field)

Per 10pc

Explanation

Item	Quantity	Unit	Unit Cost	Cost	Remarks
1. φ65mm					
1) Piping Man	0.83	md	250	207.5	
Labour	1.3	md	90	117	
Foreman	0.21	md	300	63	
Sub-total				387.5	
2) Temporary Works and Others	10	%		38.8	
Total				426.3	per 1pc =42.6
2. φ75mm					
1) Piping Man	0.96	md	250	240	
Labour	1.5	md	90	135	
Foreman	0.25	md	300	75	
Sub-total				450	
2) Temporaary Works and Others	10	%		45	
Total				495	per 1pc=49.5
3. φ80mm					
1) Piping Man	1.02	md	250	255.0	
Labour	1.6	md	90	144.0	

No.27-3,4,5 (continued)

Item	Quantity	Unit	Unit Cost	Cost	Remarks
Foreman	0.24	md	300	72	
Sub-total				471	
2) Temporary Works and Others	10	%		47.1	
Total				518.1	per 1pc=51.8
4. φ100mm					
1) Piping Man	1.28	md	250	320	
Labour	2.0	md	90	180	
Foreman	0.33	md	300	99	
Sub-total				599	
2) Temporary Works and Others	10	%		59.9	
Total				658.9	per 1pc=65.9
5. φ125mm					
1) Piping Man	1.6	md	250	400	
Labour	2.5	md	90	225	
Foreman	0.41	md	300	123	
Sub-total				748	
2) temporary Works and Others	10	%		74.8	
Total				822.8	per 1pc=82.3

Explanation

Eq No. 1-1

UNIT COST
OF

Excavation by Bulldozer
(11 ton)

D = 20 m

Item	Quantity	Unit	Unit Cost	Cost	Remarks
1. Operation Cost	1	day		5,897.7	
2. Temporary Works and Others	10	%		589.8	
Total				6,487.5	
					Production per day
Sandy soil	1	m^3		17.8	52.0 x 7 = 364 m^3
Clay	1	m^3		21.4	43.4 x 7 = 303.8 m^3

Explanation

$$Q = \frac{60q \times f \times E}{Cm}$$

60q = 80.64
f = 1
E = 0.60 (Sandy soil)
Cm = 0.034 x 20 + 0.25
= 0.93

$$Q = \frac{80.64 \times 1 \times 0.6}{0.93}$$
= 52.0 m^3/hr

E = 0.5 (Clay)

$$Q = \frac{80.64 \times 1 \times 0.5}{0.93}$$
= 43.4 m^3/hr

Eq No. 1-2

UNIT COST
OF

Excavation by Bulldozer
(11 ton)

D = 60 m

Item	Quantity	Unit	Unit Cost	Cost	Remarks
1. Operation Cost	1	day		5,897.7	
2. Temporary Works and Others	10	%		589.8	
Total				6,487.5	
					Production per day
Sandy soil	1	m^3		43.9	21.1 x 7 = 147.7 m^3
Clay	1	m^3		52.7	17.6 x 7 = 123.2 m^3

Explanation

$$Q = \frac{60q \times f \times E}{Cm}$$

60q = 80.64
f = 1
E = 0.60 (Sandy soil)
Cm = 0.034 x 60 + 0.25
= 2.29

$$Q = \frac{80.64 \times 1 \times 0.6}{2.29}$$
= 21.1 m^3/hr

E = 0.5 (Clay)

$$Q = \frac{80.64 \times 1 \times 0.5}{2.29}$$
= 17.6 m^3/hr

Eq No. 1-3	UNIT COST OF Excavation by Bulldozer (15 ton)			D = 20 m		Explanation
Item	Quantity	Unit	Unit Cost	Cost	Remarks	
1. Operation Cost	1	day		7,284.6		$Q = \frac{60q \times f \times E}{Cm}$ 60q = 107.88
2. Temporary Works and Others	10	%		728.5		Cm = 0.034 x 20 + 0.25 = 0.93
Total				8,013.1		
					Production per day	Rock f = 0.7, E = 0.35 $Q = \frac{107.88 \times 0.7 \times 0.35}{0.93}$
Sandy soil	1	m^3		16.4	69.6 x 7 = 487.2 m^3	= 28.4 m^3/hr
Clay	1	m^3		19.7	58.0 x 7 = 406 m^3	Sandy f = 1.0, E = 0.60
Rock	1	m^3		40.3	28.4 x 7 = 198.8 m^3	$Q = \frac{107.88 \times 1 \times 0.6}{0.93}$ = 69.6 m^3/hr
						Clay f = 1.0, E = 0.5 $Q = \frac{107.88 \times 1 \times 0.5}{0.93}$ = 58 m^3/hr

Eq No. 1-4

UNIT COST
OF

Excavation by Bulldozer

D = 60 m

Item	Quantity	Unit	Unit Cost	Cost	Remarks
1. Operation Cost	1	day		7,284.6	
2. Temporary Works and Others	10	%		728.5	
Total				8,013.1	
					Production per day
Sandy soil	1	m^3		40.4	28.3 x 7 = 198.1 m^3
Clay	1	m^3		48.5	23.6 x 7 = 165.2 m^3

Explanation

$Q = \frac{60q \times f \times E}{Cm}$

60q = 107.88
f = 1.0
Cm = 0.034 x 60 + 0.25
= 2.29

Sandy
E = 0.60

$Q = \frac{107.88 \times 1 \times 0.6}{2.29}$
= 28.3 m^3/hr

Clay
E = 0.5

$Q = \frac{107.88 \times 1 \times 0.5}{2.29}$
= 23.6 m^3/hr

Eq No. 2-1

UNIT COST
OF

Excavation by Back Hoe
(0.35 m^3)

Item	Quantity	Unit	Unit Cost	Cost	Remarks
1. Operation Cost	1	day		4,388.1	
2. Temporary Works and Others	10	%		438.8	
Total				4,826.9	
					Production per day
Sandy Soil	1	m^3		22.7	30.4 x 7 = 212.8 m^3

Explanation

$$Q = \frac{3600 \times q \times f \times E}{Cm}$$

q = qo x K
= 0.35 x 0.9 = 0.315

f = 1, E = 0.75
Cm (ø90°) = 28 sec

$$Q = \frac{3600 \times 0.315 \times 1 \times 0.75}{28}$$

= 30.4 m^3/hr

Eq No. 2-2

UNIT COST
OF

Excavation by Back Hoe (0.75 $m^{3)}$

Item	Quantity	Unit	Unit Cost	Cost	Remarks
1. Operation Cost	1	day		7,630.2	
2. Temporary Works and Others	10	%		763	
Total				8,393.2	
					Production per day
Sandy soil	1	m^3		18.4	65.1 x 7 = 455.7
Clay	1	m^3		21.3	56.4 x 7 = 394.8
Rock	1	m^3		39.4	30.4 x 7 = 212.8

Explanation

$Q = \frac{3600 \times q \times f \times E}{Cm}$

q = qo x K
= 0.75 x 0.9 = 0.675

Cm = 0.054ø + 23
ø90° → Cm 28 sec

Rock
f = 0.7, E = 0.5

$Q = \frac{3600 \times 0.675 \times 0.7 \times 0.5}{28}$

= 30.4 m^3/hr

Sandy
f = 1, E = 0.75

$Q = \frac{3600 \times 0.675 \times 1 \times 0.75}{28}$

= 65.1 m^3/hr

Clay
f = 1, E = 0.65

$Q = \frac{3600 \times 0.675 \times 1 \times 0.65}{28}$

= 56.4 m^3/hr

Eq No. 3-1

UNIT COST
OF

Spreading by Bulldozer
(11 ton)

Item	Quantity	Unit	Unit Cost	Cost	Remarks
1. Operation Cost	1	day		5,897.7	
2. Temporary Works and Others	10	%		589.8	
Total				6,487.5	
					Production per day
Cost per m^3 (D = 0.15)	1	m^3		12.8	72.4 x 7 = 506.8
Cost per m^3 (D = 0.30)	1	m^3		10.9	84.8 x 7 = 593.6

Explanation

Q = 10E (11D + 8)

E = 0.75
D = 0.15

Q = 10 x 0.75(11x0.15+8)
= 72.375
≒ 72.4

D = 0.30

Q = 10x0.75 (11x0.3+8)
= 84.8

Eq No. 3-2	UNIT COST OF Spreading by Bulldozer (15 ton)					Explanation
Item	Quantity	Unit	Unit Cost	Cost	Remarks	
1. Operation Cost	1	day		7,284.6		Q = 10E (12D + 9) E = 0.75 D = 0.15
2. Temporary Works and Others	10	%		728.5		
Total				8,013.1		Q = 10 x 0.75(12x0.15+9) = 81 m^3/hr
					Production per day	----------
Cost per m^3 (D = 0.15)	1	m^3		14.1	81 x 7 = 567	D = 0.30
Cost per m^3 (D = 0.30)	1	m^3		12.1	94.5 x 7 = 661.5	Q = 10x0.75 (12x0.3+9) = 94.5

Eq No. 4-1

UNIT COST
OF

Compacting by Bulldozer
(11 ton)

Item	Quantity	Unit	Unit Cost	Cost	Remarks
1. Operation Cost	1	day		5,897.7	
2. Temporary Works and Others	10	%		589.8	
Total				6,487.5	
					Production per day
I. Cost per m^3	1	m^3		9.7	95.6 x 7 = 669.2
II. Cost per m^2	1	m^2		2.9	318.5 x 7 = 2,229.5

Explanation

I. $Q = \frac{VxWxDxE}{N} (m^3/h)$

V = 3,500 m/h
W = 0.7 m
D = 0.3 m
E = 0.65
N = 5

$Q = \frac{3500x0.7x0.3x0.65}{5}$

$= 95.6\ m^3/h$

II. $A = \frac{V \times W \times E}{N}$

$= \frac{3500x0.7x0.65}{5}$

$= 318.5\ m^2/hr$

. Eq No. 4-2

UNIT COST
OF

Compacting by Bulldozer
(15 ton)

Item	Quantity	Unit	Unit Cost	Cost	Remarks
1. Operation Cost	1	day		7,284.6	
2. Temporary Works and Others	10	%		728.5	
Total				8,013.1	
					Production per day
I. Cost per m^3	1	m^3		10.5	109.2 x 7 = 764.4
II. Cost per m^2	1	m^2		3.1	364 x 7 = 2,548

Explanation

I. $Q = \frac{VxWxDxE}{N} (m^3/h)$

V = 3,500 m/h
W = 0.8 m
D = 0.3 m
E = 0.65
N = 5

$Q = \frac{3500x0.8x0.3x0.65}{5}$
$= 109.2\ m^3/h$

II. $A = \frac{V \times W \times E}{N}$
$= \frac{3500x0.8x0.65}{5}$
$= 364\ m^2/hr$

Eq No. 5-1	UNIT COST OF Field Arrangement by Bulldozer (11 ton)			2.3 ₿/m²	
Item	Quantity	Unit	Unit Cost	Cost	Remarks
1. Operation Cost	1	day		5,897.7	
2. Temporary Works and Others	10	%		589.8	
Total				6,487.5	
					Production per day
Cost per m^2	1	m^2		2.3	403.2x7 = 2,822.4 m^2

Explanation

S = So x E (m^2/hr)

So = 520.2 x W

W = B - 0.30
= 3.40 - 0.30 = 3.10

E = 0.25

S = 520.2 x 3.10 x 0.25
= 403.2

Eq No. 5-2	UNIT COST OF Field Arrangement by Bulldozer (15 ton)			2.7 B/m^2	
Item	Quantity	Unit	Unit Cost	Cost	Remarks
1. Operation Cost	1	day		7,284.6	
2. Temporary Works and Others	10	%		728.5	
Total				8,013.1	
					Production per day
Cost per m^2	1	m^2		2.7	429.2x7 = 3,004.4 m^2

Explanation

S = So x E (m^2/hr)

So = 520.2 x W

W = B - 0.30
= 3.6 - 0.3 = 3.3

E = 0.25

S = 520.2 x 3.3 x 0.25
= 429.2

Eq No. 6	UNIT COST OF Loading by Tractor Shovel (1.2 m^3)			23.9 B/m^3		Explanation
Item	Quantity	Unit	Unit Cost	Cost	Remarks	
1. Operation Cost	1	day		5,854.5		$Q = \frac{3600 \times q \times f \times E}{Cm}$
2. Temporary Works and Others	10	%		585.5		q = qo x K = 1.2 x 0.73 = 0.876
Total				6,440		f = 1 E = 0.55 Cm = 45
					Production per day	
Cost per m^3	1	m^3		23.9	38.5 x 7 = 269.5 m^3	$Q = \frac{3600x0.876x0.55}{45}$ = 38.5 m^3/hr

Eq No. 7	UNIT COST OF Hauling by Dump Truck			Calculated by 150 m, 550 m	
Item	Quantity	Unit	Unit Cost	Cost	Remarks
1. Operation Cost	1	day		3,584.5	
2. Temporary Works and Others	10	%		358.5	
Total				3,943	
					Production per day
Cost per m^3 (L = 150)	1	m^3		21.1	26.7 x 7 = 186.9
Cost per m^3 (L = 550)	1	m^3		24.9	22.6 x 7 = 158.2

Explanation

$Q = \frac{60 \times q \times f \times E}{Cm}$

$q = \frac{T}{W} = \frac{8}{1.6} = 5.0$

f = 1

E = 1

Cm = 0.005L + 10.5

L = 150

Cm = 11.25

$Q = \frac{60 \times 5 \times 1 \times 1}{11.25}$

= 26.7 m^3/hr

L = 550

Cm = 0.005 x 550 + 10.5

= 13.25

$Q = \frac{60 \times 5 \times 1 \times 1}{13.25}$

= 22.6 m^3/hr

Eq No. 7-1	UNIT COST OF Hauling by Dump Truck				Calculated by	Explanation
Item	Quantity	Unit	Unit Cost	Cost	Remarks	
1. Operation Cost	1	day		3,584.5		$q = \frac{T}{W} = \frac{8}{1.9} = 4.2$ L = 200m Cm = 0.005 x 200 + 10.5 = 11.5
2. Temporary Works and Others	10	%		358.5		
Total				3,943		$Q = \frac{60 \times 4.2 \times 1 \times 1}{11.5}$ = 21.9 m^3/hr (gravel)
					Production per day	
Cost per m^3 (L = 200)	(gravel)			25.7	21.9 x 7 = 153.3	
Cost per m^3 (L = 200)	(Sandy Soil)			21.6	26.1 x 7 = 182.7	$q = \frac{T}{W} = \frac{8}{1.6} = 5$ L = 200m Cm = 0.005 x 200 + 10.5 = 11.5 $Q = \frac{60 \times 5 \times 1 \times 1}{11.5}$ = 26.1 m^3/hr (Sandy Soil)

Eq No. 8	UNIT COST OF Compacting by Tire Roller (8 - 20t)					Explanation
Item	Quantity	Unit	Unit Cost	Cost	Remarks	
1. Operation Cost	1	day		3,799.3		I. $A = \frac{W \times V \times E}{N}$
2. Temporary Works and Others	10	%		380		W = 1.80, V = 4,200 E = $E_1 \times E_2$
Total				4,179.3		= 1.00X0.55 = 0.55 N = 5
						$A = \frac{1.8 \times 4200 \times 0.55}{5}$
I. For Area					Production per day	= 831.76 m^2/hr
Cost per m^2	1	m^2		0.7	831.6 x 7 = 5,821.2	II.Q = $\frac{W \times V \times D \times E}{N}$
Cost per m^3	1	m^3		12.3	48.6 x 7 = 340.2	W = 1.80, V = 3,000 D = 0.2 E = $E_1 \times E_2$
						1.0 x 0.45 = 0.45 N = 10
						Q = $\frac{1.8 \times 3000 \times 0.2 \times 0.45}{10}$
						= 48.6 m^3/hr

Op No. 1	OPERATION COST OF 11 ton Bulldozer			5,897.7 ฿/day per day	Explanation
Item	Quantity	Unit	Unit Cost	Cost	Remarks
1. Workers					
Operator	1.0	md	280	280	
Assistant	0.5	md	100	50	
Sub-total				330	
2. Fuel and Others					
Fuel	79.4	liter	8	635.2	0.105 x 108 x 7
Others	20	%		127	
Sub-total				762.2	
3. Depreciation Cost	7	hr	686.5	4,805.5	4,720 ÷ 5.5 x 0.8
Total				5,897.7	

Op No. 2	OPERATION COST OF 15 ton Bulldozer			7,284.6 B/day per day		Explanation
Item	Quantity	Unit	Unit Cost	Cost	Remarks	
1. Workers						
Operator	1.0	md	280	280		
Assistant	0.5	md	100	50		
Sub-total				330		
2. Fuel and Others						
Fuel	102.9	liter	8	823.2	0.105 x 140 x 7	
Others	20	%		164.6		
Sub-total				987.8		
3. Depreciation Cost	7	hr	852.4	5,966.8	5,860 ÷ 5.5 x 0.8	
Total				7,284.6		

Op No. 3	OPERATION COST OF Back-hoe (0.35 m^3)			4,388.1 ฿/day per day		Explanation
Item	Quantity	Unit	Unit Cost	Cost	Remarks	
1. Workers						
Operator	1.0	md	280	280		
Assistant	0.5	md	100	50		
Sub-total				330		
2. Fuel and Others						
Fuel	63.6	liter	8	508.8	0.115 x 79 x 7	
Others	20	%		101.8		
Sub-total				610.6		
3. Depreciation Cost	7	hr	492.5	3,447.5	3,010 ÷ 5.5 x 0.9	
Total				4,388.1		

Op No. 4	OPERATION COST OF Back Hoe (0.75 m^3)			7,630.2 B/day per day		Explanation
Item	Quantity	Unit	Unit Cost	Cost	Remarks	
1. Workers						
Operator	1.0	md	280	280		
Assistant	0.5	md	100	50		
Sub-total				330		
2. Fuel and Others						
Fuel	95.8	liter	8	766.4	0.115 x 119 x 7	
Others	20	%		153.3		
Sub-total				919.7		
3. Depreciation Cost	7	hr	911.5	6,380.5	5,710 ÷ 5.5 x 0.9	
Total				7,630.2		

Op No. 5	OPERATION COST OF Tractor Shovel (1.2 m^3)			5,854.5 B/day	Explanation
Item	Quantity	Unit	Unit Cost	Cost	Remarks
1. Workers					
Operator	1.0	md	280	280	
Assistant	0.5	md	100	50	
Sub-total				330	
2. Fuel and Others					
Fuel	74.9	liter	8	599.2	0.115 x 93 x 7
Others	20	%		119.8	
Sub-total				719	
3. Depreciation Cost	7	hr	686.5	4,805.5	4,720 ÷ 5.5 x 0.8
Total				5,854.5	

Op No. 6	OPERATION COST OF Tier Roller (8 - 20 t)			3,799.3 ฿/day		Explanation
Item	Quantity	Unit	Unit Cost	Cost	Remarks	
1. Workers						
Operator	1.0	md	280	280		
Assistant	-	-	-	-		
2. Fuel and Others						
Fuel	34.9	liter	8	279.2	0.056 x 89 x 7	
Others	20	%		55.8		
Sub-total				335		
3. Depreciation Cost	7	hr	454.9	3,184.3	2,780 ÷ 5.5 x 0.9	
Total				3,799.3		

Op No. 7	OPERATION COST OF Dump Truck (8 ton)			3,584.5 ฿/day per day		Explanation
Item	Quantity	Unit	Unit Cost	Cost	Remarks	
1. Workers						
Driver	1.0	md	220	220		
Assistant	-	-	-	-		
2. Fuel and Others						
Fuel	58.8	liter	8	470.4	0.035 x 240 x 7	
Others	20	%		94.1		
Sub-total				564.5		
3. Depreciation Cost	7	hr	400	2,800	2,000 ÷ 5.5 x 1.1	
Total				3,584.5		

DEMONSTRATION FARM
FOR PROPER LAND USE

図面 1.

BM EL=209.330

NATIONAL ROAD

TO KHON KAEN

EXISTING ROAD

EXISTING EMBANKMENT

NO.1

NO.2

NO.3

NO.4

NO.5

(B) - LINE FARM ROAD

(So) - LINE FARM ROAD

(So) - LINE FARM ROAD AND DRAINAGE CANAL

(B) - LINE DRAINAGE CANAL

(F) - LINE FARM ROAD

(D) - LINE FARM ROAD AND DRAINAGE CANAL

(G) - LINE FARM ROAD

(E) - LINE FARM ROAD AND DRAINAGE CANAL

(H) - LINE FARM ROAD AND DRAINAGE CANAL

(C) - LINE FARM ROAD AND DRAINAGE CANAL

SPILLWAY

RESERVOIR

DAM

EXISTING RESERVOIR

N

LEGEND

- (Ir) Irrigation field
- (La) Land use demonstration field
- (So) Soil erosion survey field
- Runoff plots
- Irrigation water supply system
- Drainage canal
- Farm road
- W.T Water tank
- P Pump station
- Water supply pipeline
- (1) Field laboratory
- (2) Survey and storage house
- (3) Machinery store-house
- (4) Dry yard
- Green yard
- Wasteland etc
- Cross-over of canal

0 50 100

SCALE 1 : 1,000

JAPAN INTERNATIONAL COOPERATION AGENCY	
DETAILED DESIGN SURVEY FOR THE AGRICULTURAL DEVELOPMENT RESEARCH PROJECT PHASE I IN NORTHEAST THAILAND	
GENERAL PLAN	
PREPARED BY	DRAWING NO.
CHECKED BY	1

図面 1-1

DEMONSTRATION FARM
FOR PROPER LAND USE

N

LEGEND

- (Ir) Irrigation field
- (La) Land use demonstration field
- (So) Soil erosion survey field
- Rundl plots
- Irrigation water supply system
- Drainage canal
- Farm road
- Water tank
- Pump station
- Water supply pipeline
- ① Field laboratory
- ② Survey and storage house
- ③ Machinery store-house
- ④ Dry yard
- Green yard
- Wasteland etc.
- Cross-over of canal

SCALE 1:1,000

EXISTING ROAD
TO KHON KAEN
EXISTING ROAD
NATIONAL ROAD
BM EL-209.320
EXISTING DAM
EXISTING RESERVOIR
EXISTING EMBANKMENT
EXISTING ROAD

Ⓒ-LINE DRAINAGE CANAL L=400
Ⓓ-LINE FARM ROAD L=195 DRAINAGE CANAL L=186
Ⓔ-LINE FARM ROAD L=190 DRAINAGE CANAL L=185
Ⓕ-LINE FARM ROAD L=260
Ⓐ-LINE Farm road L=434 Drainage canal L=65
Ⓖ-LINE FARM ROAD L=135
Ⓗ-LINE FARM ROAD L=115
Ⓑ-LINE DRAINAGE CANAL L=320

NO.1 NO.2 NO.3 NO.4 NO.5

JAPAN INTERNATIONAL COOPERATION AGENCY

DETAILED DESIGN SURVEY FOR
THE AGRICULTURAL DEVELOPMENT RESEARCH PROJECT
PHASE II IN NORTHEAST THAILAND

GENERAL PLAN

PREPARED BY	DRAWING NO.
CHECKED BY	1

資料４

施工監理関係資料

施工監理関係資料を次頁より示す。

資料 4-1. Inspection Committee

บริษัท สุวลี จำกัด

SUVALEE CO.,LTD.

11/3 Soi Suphamitr, Sukumvith Rd., Huaykapi, M
Chonburi. 20000 Tel. 038-275334-8 Fax. 27
Bangkok Tel. 2411122-2410581

25 SEPTEMBER 1991

MR. YOSHINORI GOTO

CONSTRUCTION SUPERVISOR

RE: ADVANCE PAYMENT CONSTRUCTION WORK OF THE DEMONSTRATION FARM THE AGRICULTURAL DEVELOPMENT RESEARCH PROJECT PHASE II

DEAR SIRS,

WITH REFERENCE TO ARTICLE 3. PAYMENT OF CONTRACT, WE ARE PLEASED TO INFORM YOU THAT FOLLOWING EQUIPMENT AND MATERIALS REQUIRED FOR WORK HAVE BEEN BROUGHT AND STORED AT THE JOB SITE

1.	BACK-HOE KOMUTSU PC 200	1 NO.
2.	DUMP TRUCK HINO 725	1 NO.
3.	FARM TRACTOR FORD 6610	1 NO.
4.	LABOUR CAMP	1 NO.

WILL YOU THEREFORE BE KIND ENOUGH TO APPROVE THE ADVANCE PAYMENT AT AN EARLY DATE

VERY TRULY YOURS,

SUVALEE CO,LTD

(MR. TANOM KRIENGTAWEEKIT)

EXECUTIVE DIRECTOR

บริษัท สุวลี จำกัด
111/1 ซอยสุขุมวิท ถ.สุขุมวิท ต.ห้วยกะปิ อ.เมือง
จ.ชลบุรี 20000 โทร.038 - 275334 - 8 แฟกซ์ 274337
กรุงเทพฯ 2411122 - 2410581

SUVALEE CO.,LTD.
111/3 Soi Suphamit, Sukumvith Rd., Huaykapi, M.
Chonburi. 20000 Tel. 038 - 275334 - 8 Fax. 27
Bangkok Tel. 2411122 - 2410581

DATE. 25 SEPTEMBER 1991

TO. JAPAN INTERNATIONAL COOPERATION AGENCY,

THAILAND OFFICE

INVOICE

DEAR SIRS,

IT IS RESPECTFULLY REQUEDTED THAT THE FOLLOWING PAYMENT BE MADE AT YOUR EARLIEST CONVENIENCE

NAME OF PROJECT : CONSTRUCTION WORK OF THE DEMONSTRATION FARM ON THE AGRICULTURAL DEVELOPMENT RESEARCH PROJECT PHASE II

THE PAYMENT : ADVANCE PAYMENT

740,000 BAHT (SEVEN HUNDRED FORTY THOUSAND BAHT.)

THANKING YOU IN ADVANCE FOR YOU KIND ATTENTION TO THE ABOVE WE ARE

VERY TRULY YOURS,

SUVALEE CO, LTD.

(MR. TANOM KRIENGTAWEEKIT)

EXECUTIVE DIRECTOR

Inspection Record I 27th September 1991

Mr. Nobuji ABE
Resident Representative
Thailand Office
Japan International Cooperation Agency

Re : Construction Work of the Demonstration Farm on the Agricultural Development Research Project Phase II

As the result of Advance Payment Inspection, it is informed that equipment and materials required for the Works have been brought and properly stored at the job site.

Since Mr. Wisuthi Amaritsut is in Japan for the JICA counterpart training program, the inspection was carried out by the rest of members.

Inspector ((Members of Inspection Committee)

1. Dr. Torao Goto_____
(Team Leader of Agricultural Development Research Project)

2. Mr. Wisuthi Amaritsut_____
(Director of Agricultural Development Research Center)

3. Mr. Kazuhiko Otani_____
(Project Coordinator of Agricultural Development Research Project)

4. Mr. Kasem Chompoonutprapa_____
(Deputy Director of Agricultural Development Research Center)

5. Mr. Yoshinori Goto_____
(Supervisor)

บริษัท สุวลี จำกัด
11/3 หมู่ 1 ซอยศุภมิตร ถ.สุขุมวิท ต.ห้วยกะปิ อ.เมือง
ชลบุรี 20000 โทร.038-275334-8 แฟกซ์ 274337
กรุงเทพฯ 2411122-2410581

SUVALEE CO.,LTD.
11/3 Soi Suphamitr, Sukumvith Rd., Huaykapi, Muang
Chonburi. 20000 Tel. 038-275334-8 Fax. 274337
Bangkok Tel. 2411122-2410581

NOVEMBER 18th 1991

MR. YOSHINORI COTO

CONSTRUCTION SUPERVISOR

RE: FIRST INTERIM PAYMENT CONSTRUCTION WORK OF THE DEMONSTRATION FARM THE AGRICULTURAL DEVELOPMENT RESEARCH PROFECT PHASE II

DEAR SIRS:

WITH REFERENCE TO ARTICLE 3. OF THE CONTRACT. WE ARE PLEASED TO INFORM YOU THAT OUR WORK IS READY FORTY (40) PERCENT.

IT IS RESPECT FULLY REQUESTED THAT INTERIM INSPECTION BE CONDUCTED AT YOUR EARLIEST CONVENIENCE.

YOUR KIND ATTENTION TO THE ABOVE WILL BE HIGHLY APPRECIATED.

VERY TRULY YOURS.

SUVALEE CO., LTD.

(MR TANOM KRIENGTAWEEKIT.

EXECUTIVE DIRECTOR.

บริษัท สุวลี จำกัด
11/3 หมู่ 1 ซอยศุภมิตร ถ.สุขุมวิท ต.ห้วยกะปิ อ.เมือง
จ.ชลบุรี 20000 โทร.038-275334-8 แฟกซ์ 274337
กรุงเทพฯ 2411122-2410581

SUVALEE CO.,LTD.
11/3 Soi Suphamitr, Sukumvith Rd., Huaykapi, Muang,
Chonburi. 20000 Tel. 038-275334-8 Fax. 274337
Bangkok Tel. 2411122-2410581

NOVEMBER 18th 1991.

TO. JAPAN INTERNATIONAL COOPERATION AGENCY.

THAILAND OFFICE

INVOICE

DEAR SIRS.

IT IS RESPECIFULLY REQUESTED THAT THE FOLLOWING PAYMENT BE MADE AT YOUR EARLIEST CONVENIENCE

NAME OF PROJECT : CONSTRUCTION WORK OF THE DEMONSTRATION FARM ON THE AGRICULTURAL DEVELOPMENT RESEARCH PROJECT PHASE II

THE PAYMENT : FIRST INTERIM. PAYMENT

2,220,000 BATH. (TWO MILLION TWO HUNDRED TWENTY THOUSAND BATH)

THANKING YOU IN ADVANCE FOR YOU KIND ATTENTION TO THE ABOVE WE ARE

VERY TRULY YOURS.

SUVALEE CO, LTD.

(MR. TANOM KRIENGTAWEEKIT)

EXECUTIVE DIRECTOR

Inspection Record II

18th November 1991

Mr. Nobuji ABE
Resident Representative
Thailand Office
Japan International Cooperation Agency

Re : Construction of Work of the Demonstration Farm on the Agricultural Development Research Project Phase II

As the result of Interim Inspection, it is informed that the construction work has been achieved in conformity with drawings and specifications.

The completed amount of construction is as follows.

1) Reservoir	0 %
2) Drainage Canals	8 %
3) Farm Roads	52 %
4) Finishing of Field	100 %
5) Irrigation Facilities	0 %
6) Arrangement of Building Site	85 %
7) Buildings	0 %
8) Carry of Materials	100 %
Total Evaluation	43.6 %

Inspector (Members of Inspection Committee)

Dr. Torao Goto _____
(Team Leader of Agricultural Development Research Project)

Mr. Wisuthi Amaritsut _____
(Director of Agricultural Development Research Center)

Mr. Kazuhiko Otani _____
(Project Coordinator of Agricultural Development Research Project)

Mr. Kasem Chompoonutprapa _____
(Deputy Director of Agricultural Development Research Center)

Mr. Yoshinori Goto _____
(Supervisor)

		BILL OF QUANTITIES (Direct Cost)					
Appellation	Quantity plan	Quantity actual	Unit	Price plan	Price actual(Bt)	Remarks	
1) Reservoir	1.00	0.00	set	45,000	0		
2) Drainage Canals	1.00	1.00	set	802,000	61,445		
3) Farm Roads	1.00	1.00	set	734,000	378,651		
4) Finishing of Field	1.00	1.00	set	138,000	138,000		
5) Irrigation Facilities	1.00	0.00	set	1,327,000	0		
6) Arrangement of Building Site	1.00	1.00	set	910,800	778,009		
7) Buildings	1.00	0.00	set	2,045,000	0		
8) Carry of Materials	1.00	1.00	set		1,262,735		
Grand-total				6,001,800	2,618,840	43.60%	

		BILL OF QUANTITIES (Direct Cost)					
Appellation	Quantity plan	Quantity actual	Unit	Unit Price	Price	Remarks	
(1) Reservoir							
1. Excavating and Transportation							
1-1 Excavating for dike	1,950.00		m3			included in Branch Road (H)	
1-2 Excavating and Transportation	760.00	0.00	m3	48.80	0		
1-3 Spreading and Spoil-bank	760.00	0.00	m3	10.90	0		
Sub-total					0		
Grand-total					0		
(2) Drainage Canal							
1. Main Canal (B Line)							
1-1 (B)-1, Line L=170m							
Excavating (by Machine)	1,150.00	1,150.00	m3	22.70	26,105		
Excavating (by Manpower)	26.00	0.00	m3	75.20	0		
Smoothing Face of Slope	751.00	0.00	m2	4.20	0		
Protecting Face of Slope	340.00	0.00	m2	50.90	0		
Wire Box for Gabionade (TypeII)	45.00	0.00	pc	2,492.70	0		
Sub-total					26,105		
1-2 (B)-2,Line L=150m							
Excavating (by Machine)	719.00	719.00	m3	22.70	16,321		
Excavating (by Manpower)	-18.00	0.00	m3	75.20	0		
Smoothing Face of Slope	711.00	0.00	m2	4.20	0		
Protecting Face of Slope	300.00	0.00	m2	50.90	0		
Wire Box for Gabionade (Type I)	24.00	0.00	pc	2,234.70	0		
Wire Box for Gabionade (Type II)	24.00	0.00	pc	2,492.70	0		
Sub-total					16,321		
Middle-total					42,426		

		BILL OF QUANTITIES (Direct Cost)					
Appellation	Quantity plan	Quantity actual	Unit	Unit Price	Price	Remarks	
2 Branch Drainage Canal (D Line)							
2-1-1. (D)-1. Gentle Slope L=75m							
Excavating (by Machine)	51.00	51.00	m3	22.70	1,158		
Smoothing Face of Slope	189.00	0.00	m2	4.20	0		
Protecting Face of Slope	150.00	0.00	m2	50.90	0		
Sub-total					1,158		
2-1-2,(D)-1.Chute, L=26m							
Excavating (by Machine)	15.00	15.00	m3	22.70	341		
Excavating (by Manpower)	5.00	0.00	m3	75.20	0		
Smoothing Face of Slope	49.00	0.00	m2	4.20	0		
Protecting Face of Slope	52.00	0.00	m2	50.90	0		
Wire Box for Gabionade (Type I)	8.00	0.00	pc	2,234.70	0		
Sub-total					341		
Middle-total					1,449		
2-2,(D)-2m L=85m							
Excavating (by Machine)	55.00	55.00	m3	22.70	1,249		
Excavating (by Manpower)	3.00	0.00	m3	75.20	0		
Smoothing Face of Slope (Gentle Slope)	139.00	0.00	m2	4.20	0		
Smoothing Face of Slope (Chute)	132.00	0.00	m2	4.20	0		
Protecting Face of Slope	170.00	0.00	m2	50.90	0		
Wire Box for Gabionade (Type I)	5.00	0.00	pc	2,234.70	0		
Sub-total					1,249		
Total					2,698		
3 Branch Drainage Canal (A Line)							
3-1, (A)-1, L=101m							
Excavating (by Machine)	104.00	104.00	m3	22.70	2,361		
Excavating (by Manpower)	9.00	0.00	m3	75.20	0		

	BILL OF QUANTITIES (Direct Cost)						
Appellation	Quantity plan	Quantity actual	Unit	Unit Price	Price	Remarks	
Smoothing Face of Slope	272.00	0.00	m2	4.20	0		
Protecting Face of Slope	202.00	0.00	m2	50.90	0		
Wire Box for Gabionade (Type I)	16.00	0.00	pc	2,234.70	0		
Sub-total					2,361		
3-1, (A)-2, L=64 m							
Excavating (by Machine)	92.00	92.00	m3	22.70	2,088		
Excavating (by Manpower)	7.00	0.00	m3	75.20	0		
Smoothing Face of Slope	213.00	0.00	m2	4.20	0		
Protecting Face of Slope	128.00	0.00	m2	50.90	0		
Wire Box for Gabionade (type I)	13.00	0.00	pc	2,234.70	0		
Sub-total					2,088		
Total					4,449		
4 Branch Drainage Canal, (E Line)							
4-1, (E)-1, L=95m							
Excavating (by Machine)	65.00	0.00	m3	22.70	0		
Smoothing Face of Slope	240.00	0.00	m2	4.20	0		
Protecting Face of Slope	190.00	0.00	m2	50.90	0		
Sub-total					0		
4-2. (E)-2, L=90m							
Excavating (by Machine)	58.00	0.00	m3	22.70	0		
Excavating (by Manpower)	3.00	0.00	m3	75.20	0		
Smoothing Face of Slope (Gentle Slope)	151.00	0.00	m2	4.20	0		
Smoothing Face of Slope (Chute)	57.00	0.00	m2	4.20	0		
Protecting Face of Slope	180.00	0.00	m2	50.90	0		
Wire Box for Gabionade (Type I)	5.00	0.00	pc	2,234.70	0		
Sub-total					0		
Total					0		

Appellation	BILL OF QUANTITIES (Direct Cost)						
	Quantity plan	Quantity actual	Unit	Unit Price	Price	Remarks	
5 West Side Drainage Canal (C Line)							
5-1. (C)-1, L= 185m							
Excavating (by Machine)	191.00	191.00	m3	22.70	4,336		
Excavating (by Manpower)	12.00	0.00	m3	75.20	0		
Smoothing Face of Slope	498.00	0.00	m2	4.20	0		
Protecting Face of Slope	370.00	0.00	m2	50.90	0		
Wire Box for Gabionade (Type I)	23.00	0.00	pc	2,234.70	0		
Sub-total					4,336		
5-2, (C)-2, L=115m							
Excavating (by Machine)	166.00	166.00	m3	22.70	3,768		
Excavating (by Manpower)	10.00	0.00	m3	75.20	0		
Smoothing Face of Slope	382.00	0.00	m2	4.20	0		
Protecting Face of slope	230.00	0.00	m2	50.90	0		
Wire Box for Gabionade (Type I)	18.00	0.00	pc	2,234.70	0		
Sub-total					3,768		
5-3 (C)-3, L=100m							
Excavating (by Machine)	166.00	166.00	m3	22.70	3,768		
Excavating (by Manpower)	11.00	0.00	m3	75.20	0		
Smoothing Face of Slope	363.00	0.00	m2	4.20	0		
Protecting Face of Slope	200.00	0.00	m2	50.90	0		
Wire Box Gabionade (Type I)	17.00	0.00	pc	2,234.70	0		
Wire Box for Gabionade (Type II)	56.00	0.00	pc	2,492.70	0		
Sub-total					3,768		
Total					11,872		
Grand-total					61,445		

Appellation	BILL OF QUANTITIES (Direct Cost)						
	Quantity plan	Quantity actual	Unit	Unit Price	Price	Remarks	
(3) Farm Road							
1. Main Road (A)-Line L=434m W=5m							
Excavating and Removing of Top-soil	3,320.00	3,320.00	m3	16.40	54,448		
Embankment of Sub-soil	2,084.00	2,084.00	m3	17.70	36,887		
Turning back of Top-soil	3,320.00	3,320.00	m3	16.40	54,448		
Arrangement of Road Face	3,470.00	3,470.00	m2	2.90	10,063		
Pavement by Laterite	174.00	0.00	m3	100.00	0		
Compacting by Tire Roller	2,083.00	2,083.00	m3	12.30	25,621		
Protecting of slope	868.00	0.00	m2	50.90	0		
Sub-total					181,467		
2 Branch Road, (D) Line L=195m W=4m							
Excavating and Removing of Top-soil	1,316.00	1,316.00	m3	16.40	21,582		
Embankment of Sub-soil	819.00	819.00	m3	19.70	16,134		
Turning back of Top-soil	1,316.00	1,316.00	m3	16.40	21,582		
Arrangement of Road Face	1,365.00	1,365.00	m2	2.90	3,959		
Pavement by Laterite	59.00	0.00	m3	100.00	0		
Compacting by Tire Roller	819.00	819.00	m3	12.30	10,074		
Protecting of Slope	390.00	0.00	m2	50.90	0		
Sub-total					73,331		
3 Branch Road (E) Line L=190m W=4m							
Excavating and Removing of Top-soil	1,283.00	334.00	m3	16.40	5,478		
Embankment of Sub-soil	798.00	207.00	m3	19.70	4,078		
Turning back of Top-soil	1,283.00	334.00	m3	16.40	5,478		
Arrangement of Road Face	1,330.00	346.00	m2	2.90	1,003		
Pavement by Laterite	57.00	0.00	m3	100.00	0		
Compacting by Tire Roller	798.00	207.00	m3	12.30	2,546		
Protecting of Slope	380.00	0.00	m2	50.90	0		
Sub-total					18,583		

	BILL OF QUANTITIES (Direct Cost)						
Appellation	Quantity plan	Quantity actual	Unit	Unit Price	Price	Remarks	
4 Branch Road (F)-Line L=135m W=4m							
Excavating and Removing of Top-soil	911.00	911.00	m3	16.40	14,940		
Embankment of Sub-soil	567.00	567.00	m3	19.70	11,170		
Turning back of Top-soil	911.00	911.00	m3	16.40	14,940		
Arrangement of Road Face	945.00	945.00	m2	2.90	2,741		
Pavement by Laterite	41.00	0.00	m3	100.00	0		
Compacting by Tire Roller	567.00	567.00	m3	12.30	6,974		
Protecting of Slope	270.00	0.00	m2	50.90	0		
Sub-total					50,765		
5 Branch Road (G)-Line L=115m W=4m							
Excavation and Removing of Top-soil	776.00	776.00	m3	16.40	12,726		
Embankment of Sub-soil	483.00	483.00	m3	19.70	9,515		
Turning back of Top-soil	776.00	776.00	m3	16.40	12,726		
Arrangement of Road Face	805.00	805.00	m2	2.90	2,335		
Pavement by Laterite	35.00	0.00	m3	100.00	0		
Compacting by Tire Roller	483.00	483.00	m3	12.30	5,941		
Protecting of Slope	230.00	0.00	m2	50.90	0		
Sub-total					43,243		
6 Branch Road (H)-Line L=260m W=4m	--						
Banking by Machine	1,950.00	371.00	m3	16.40	6,084		
Arrangement of Road Face	1,118.00	219.00	m2	2.90	615		
Pavement by Laterite	78.00	0.00	m3	100.00	0		
Compacting by Tire Roller	1,950.00	371.00	m3	12.30	4,563		
Protecing of Slope	520.00	0.00	m2	50.90	0		
Sub-total					11,262		

	BILL OF QUANTITIES (Direct Cost)						
Appellation	Quantity plan	Quantity actual	Unit	Unit Price	Price	Remarks	
7.Crossover of Canal 5 places							
Concrete (Lean mixed)	17.20	0.00	m3	1,460.00	0		
Cobblestones for Bed	69.00	0.00	m3	586.00	0		
Wire Box for Gabionade (Type II)	4.00	0.00	pc	2,492.70	0		
Sub-total					0		
Grand -total					378,651		
(4).Finishing of Field							
1.Finishing of Field	60,000.00	60,000.00	m2	2.30	138,000		
Grand-total					138,000		
(5).Irrigation Facilities							
Irrigation Facilities	1.00	0.00	set	1,327,000.00	0		
Grand-total					0		
(6).Arrangement of Building Site							
1-1, Excavating of Border	4,130.00	3,900.00	m3	31.20	121,680		
Sub-total					121,680		
1-2. Embankment by Transported Soil							
Excavating and Loading	7,600.00	6,500.00	m3	39.40	256,100		
Transporting	7,600.00	6,500.00	m3	25.70	167,050		
Spreading	10,860.00	9,290.00	m3	12.80	118,912		
Compacting by Tire Roller	10,860.00	9,290.00	m2	12.30	114,267		
Sub-total					656,329		
1-3, Culrent across Road							
Concrete pipe D 800	20.00	0.00	pc	450.00	0		
Concrete Pipe Setting	1.00	0.00	set	4,400.00	0		

Appellation	BILL OF QUANTITIES (Direct Cost)						
	Quantity plan	Quantity actual	Unit	Unit Price	Price	Remarks	
Concrete	0.60	0.00	m3	1,460.00	0		
Sub-total					0		
Grand-total					778,009		
(7).Buildings							
1-1.Buildings							
Field Laboratory	1.00	0.00	set	1,004,000.00	0		
Survey and Storage House	1.00	0.00	set	842,000.00	0		
Machinery Store House	1.00	0.00	set	139,000.00	0		
Sub-total					0		
1-2. Dry Yard							
Concrete	21.60	0.00	m3	1,680.00	0		
Iron Bar	504.00	0.00	kg	21.00	0		
Lean form	6.00	0.00	m2	200.00	0		
Cobble Stones for Bed	21.60	0.00	m3	586.00	0		
Sub-total					0		
Grand-total					0		

	BILL OF QUANTITIES (Direct Cost)						
Appellation	Quantity Plan	Quantity Actual	Unit	Unit Price	Price Actual	Remarks	
(8) Carry of Materials							
1.Wire Mesh	2,526.00	2,526.00	m2	200	505,200	space 2",#11	
2.Cobble-stone	480.00	480.00	m3	400	192,000		
3.Steel pipe D 80	635.00	635.00	m	210	133,350		
4.PVC Pipe D 125	283.00	283.00	m	285	80,655		
5.PVC Pipe D 100	121.00	121.00	m	170	20,570		
6.PVC Pipe D 75	344.00	344.00	m	120	41,280		
7.PVC Pipe D 65	124.00	124.00	m	100	12,400		
8.PVC Pipe D 50	179.00	179.00	m	70	12,530		
9.Iron Bar	6,880.00	6,880.00	kg	18	123,840		
10.Steel	4,270.00	4,270.00	kg	33	140,910	L.G.S	
Grand-total					1,262,735		

บริษัท สุวลี จำกัด
11/3 หมู่ 1 ซอยศุภมิตร ถ.สุขุมวิท ต.ห้วยกะปิ อ.เมือง
จ.ชลบุรี 20000 โทร.038 - 275334 - 8 แฟกซ์ 274337
กรุงเทพฯ 2411122 - 2410581

SUVALEE CO.,LTD.
11/3 Soi Suphamitr, Sukumvith Rd., Huaykapi, Muar
Chonburi. 20000 Tel. 038 - 275334 - 8 Fax. 2743
Bangkok Tel. 2411122 - 2410581

DECEMBER 18, 1991

MR. YOSHINORI GOTO

CONSTRUCTION SUPERVISOR

RE : SECOND INTERIM PAYMENT CONSTRUCTION WORK OF THE DEMONSTRATION FARM THE AGRICULTURAL DEVELOPMENT RESEARCH PROFECT PHASE II

DEAR SIRS :

WITH REFERENCE TO ARTICLE 3. OF THE CONTRACT. WE ARE PLEASED TO INFORM YOU THAT OUR WORK IS READY SEVENTY (70) PERCENT.

IT IS RESPECT FULLY REQUESTED THAT INTERIM INSPECTION BE CODUCTED AT YOUR EARLIEST CONVENIENCE.

YOUR KIND ATTENTION TO THE ABOVE WILL BE HIGHLY APPRECIATED.

VERY TRULY YOURS.

SUVALEE CO.,LTD.

(MR TANOM KRIENGTAWEEKIT.)

EXECUTIVE DIRECTOR.

บริษัท สุวลี จำกัด
11/3 หมู่ 1 ซอยศุภมิตร ถ.สุขุมวิท ต.ห้วยกะปิ อ.เมือง
ชลบุรี 20000 โทร.038-275334-8 แฟกซ์ 274337
กรุงเทพฯ 2411122-2410581

SUVALEE CO.,LTD.
11/3 Soi Suphamitr, Sukumvith Rd., Huaykapi, Muang
Chonburi. 20000 Tel. 038-275334-8 Fax. 27433
Bangkok Tel. 2411122-2410581

DECEMBER 18, 1991.

TO. JAPAN INTERNATIONAL COOPERATION AGENCY.

THAILAND OFFICE

INVOICE

DEAR SIRS.

IT IS RESPECIFULLY REQUESTED THAT THE FOLLOWING PAYMENT BE MADE AT YOUR EARLIEST CONVENIENCE

NAME OF PROJECT : CONSTRUCTION WORK OF THE DEMONSTRATION FARM ON THE AGRICULTURAL DEVELOPMENT RESEARCH PROJECT PHASE II

THE PAYMENT : SECOND INTERIM. PAYMENT

2,220,000 BATH. (TWO MILLLION TWO HUNDRED TWENTY THOUSAND BATH)

THANKING YOU IN ADVANCE FOR YOU KIND ATTENTION TO THE ABOVE WE ARE

VERY TRULY YOURS.

SUVALEE CO, LTD.

(MR. TANOM KRIENGTAWEEKIT)

EXECUTIVE DIRECTOR

Inspection Record III 18th December 1991

Mr. Nobuji ABE
Resident Representative
Thailand Office
Japan International Cooperation Agency

Re : Construction ~~of~~ Work of the Demonstration Farm on the Agricultural Development Research Project Phase II

As the result of Interim Inspection, it is informed that the construction work has been achieved in conformity with drawings and specifications.

The completed amount of construction is as follows.

1) Reservoir	0 %
2) Drainage Canals	52 %
3) Farm Roads	68 %
4) Finishing of Field	100 %
5) Irrigation Facilities	16 %
6) Arrangement of Building Site	85 %
7) Buildings	72 %
8) Carry of Materials	100 %
Total Evaluation	72.3 %

Inspector (Members of Inspection Committee)

Dr. Torao Goto _____
(Team Leader of Agricultural Development Research Project)

Mr. Wisuthi Amaritsut _____
(Director of Agricultural Development Research Center)

Mr. Kazuhiko Otani _____
(Project Coordinator of Agricultural Development Research Project)

Mr. Kasem Chompoonutprapa _____
(Deputy Director of Agricultural Development Research Center

Mr. Yoshinori Goto _____
(Supervisor)

BILL OF QUANTITIES (Direct Cost)							
Appellation	Quantity plan	Quantity actual	Unit	Price plan	Price actual(Bt)	Remarks	
1) Reservoir	1.00	0.00	set	45,000.00	0		
2) Drainage Canals	1.00	1.00	set	802,000.00	416,781		
3) Farm Roads	1.00	1.00	set	734,000.00	487,288		
4) Finishing of Field	1.00	1.00	set	138,000.00	138,000		
5) Irrigation Facilities	1.00	0.00	set	1,327,000.00	218,000		
6) Arrangement of Building Site	1.00	1.00	set	910,800.00	778,009		
7) Building	1.00	0.00	set	2,045,000.00	1,473,730		
8) Carry of Materials	1.00	1.00	set		829,385		
Grand-total				6,001,800.00	4,341,193	72.30%	

BILL OF QUANTITIES (Direct Cost)

Appellation	Quantity plan	Quantity actual	Unit	Unit Price	Price	Remarks
(1)Reservoir						
1.Excavating and Transportation						
1-1 Excavating for dike	1,950.00		m3			included in Branch Road (H)
1-2 Excavating and Transportation	760.00	0.00	m3	48.80	0	
1-3 Spreading and Spoil-bank	760.00	0.00	m3	10.90	0	
Sub-total					0	
Grand-total					0	
(2)Drainage Canal						
1.Main Canal (B Line)						
1-1 (B)-1, Line L=170 m						
Excavating (by Machine)	1,150.00	1,150.00	m3	22.70	26,105	
Excavating (by Manpower)	26.00	0.00	m3	75.20	0	
Smoothing Face of Slope	751.00	0.00	m2	4.20	0	
Protecting Face of Slope	340.00	0.00	m2	50.90	0	
Wire Box for Gabionade (TypeII)	45.00	0.00	pc	2,492.70	0	
Sub-total					26,105	
1-2 (B)-2, Line L=150m						
Excavating (by Machine)	719.00	719.00	m3	22.70	16,321	
Excavating (by Manpower)	18.00	18.00	m3	75.20	1,354	
Smoothing Face of Slope	711.00	0.00	m2	4.20	0	
Protecting Face of Slope	300.00	0.00	m2	50.90	0	
Wire Box for Gabionade (TypeI)	24.00	24.00	pc	2,234.70	53,633	
Wire Box for Gabionade (TypeII)	24.00	24.00	pc	2,492.70	59,825	
Sub-total					131,133	
Middle-total					157,238	

BILL OF QUANTITIES (Direct Cost)							
Appellation	Quantity plan	Quantity actual	Unit	Unit Price	Price	Remarks	
2 Branch Drainage Canal (D Line)							
2-1-1. (D)-1. Gentle Slope L=75m							
Excavating (by Machine)	51.00	51.00	m3	22.70	1,158		
Smoothing Face of Slope	189.00	0.00	m2	4.20	0		
Protecting Face of Slope	150.00	0.00	m2	50.90	0		
Sub-total					1,158		
2-1-2, (D)-1 Chute, L=26m							
Excavating (by Machine)	15.00	15.00	m3	22.70	341		
Excavating (by Manpower)	5.00	5.00	m3	75.20	376		
Smoothing Face of Slope	49.00	0.00	m2	4.20	0		
Wire Box for Gabionade (Type1)	8.00	8.00	pc	2,234.70	17,878		
Sub-total					18,595		
Middle-total					19,753		
2-2,(D)-2 L=85m							
Excavating (by Machine)	55.00	55.00	m3	22.70	1,249		
Excavating (by Manpower)	3.00	3.00	m3	75.20	226		
Smoothing Face of Slope (Gentle Slope)	139.00	0.00	m2	4.20	0		
Smoothing Face of Slpe (Chute)	132.00	0.00	m2	4.20	0		
Protecting Face of Slope	170.00	0.00	m2	50.90	0		
Wire Box for Gabionade (Type1)	5.00	5.00	pc	2,234.70	11,174		
Sub-total					12,649		
Total					32,402		
3.Branch Drainage Canal (A Line)							
3-1, (A)-1, L=101m							
Excavating (by Machine)	104.00	104.00	m3	22.70	2,361		
Excavating (by Manpower)	9.00	9.00	m3	75.20	677		

BILL OF QUANTITIES (Direct Cost)							
Appellation	Quantity plan	Quantity actual	Unit	Unit Price	Price	Remarks	
Smoothing Face of Slope	272.00	0.00	m2	4.20	0		
Protecting Face of Slope	202.00	0.00	m2	50.90	0		
Wire Box for Gabionade (Type I)	16.00	16.00	pc	2,234.70	35,755		
Sub-total					38,793		
3-1,(A)-2, L=64 m							
Excavating (by Machine)	92.00	92.00	m3	22.70	2,088		
Excavating (by Manpower)	7.00	7.00	m3	75.20	526		
Smoothing Face of Slope	213.00	0.00	m2	4.20	0		
Protecting Face of Slope	128.00	0.00	m2	50.90	0		
Wire Box for Gabionade (Typel)	13.00	13.00	pc	2,234.70	29,051		
Sub-total					31,665		
Total					70,458		
4 Branch Drainage Canal, (E Line)							
4-1, (E)-1, L=95m							
Excavating (by Machine)	65.00	0.00	m3	22.70	0		
Smoothing Face of Slope	240.00	0.00	m2	4.20	0		
Protecting Face of Slope	190.00	0.00	m2	50.90	0		
Sub-total					0		
4-2. (E)-2, L=90m							
Excavating (by Machine)	58.00	58.00	m3	22.70	1,317		
Excavating (by Manpower)	3.00	3.00	m3	75.20	226		
Smoothing Face of Slope (Gentle Slope)	151.00	0.00	m2	4.20	0		
Smoothing Face of Slope (Chute)	57.00	0.00	m2	4.20	0		
Portecting Face of Slope	180.00	0.00	m2	50.90	0		
Wire Box for Gabionade (Typel)	5.00	5.00	pc	2,234.70	11,174		
Sub-total					12,717		
Total					12,717		

BILL OF QUANTITIES (Direct Cost)

Appellation	Quantity plan	Quantity actual	Unit	Unit Price	Price	Remarks
5 West Side Drainage Canal (C Line)						
5-1. (C)-1, L=185m						
Excavating (by Machine)	191.00	191.00	m3	22.70	4,336	
Excavating (by Manpower)	12.00	12.00	m3	75.20	902	
Smoothing Face of Slope	498.00	0.00	m2	4.20	0	
Protecting Face of Slope	370.00	0.00	m2	50.90	0	
Wire Box for Gabionade (TypeI)	23.00	23.00	pc	2,234.70	51,398	
Sub-total					56,636	
5-2,(C)-2, L=115m						
Excavating (by Machine)	166.00	166.00	m3	22.70	3,768	
Excavating (by Manpower)	10.00	10.00	m3	75.20	752	
Smoothing Face of Slope	382.00	0.00	m2	420.00	0	
Protecting Face of Slope	230.00	0.00	m2	50.90	0	
Wire Box for Gabionade (TypeI)	18.00	18.00	pc	2,234.70	40,225	
Sub-total					44,745	
5-3 (C)-3, L=100m						
Excavating (by Machine)	166.00	166.00	m3	22.70	3,768	
Excavating (by Manpower)	11.00	11.00	m3	75.20	827	
Smoothing Face of Slope	363.00	0.00	m2	4.20	0	
Protecting Face of Slope	200.00	0.00	m2	50.90	0	
Wire Box Gabionade(TypeI)	17.00	17.00	pc	2,234.70	37,990	
Wire Box Gabionade (TypeII)	56.00	0.00	pc	2,492.70	0	
Sub-total					42,585	
Total					143,966	
Grand-total					416,781	

BILL OF QUANTITIES (Direct Cost)							
Appellation	Quantity plan	Quantity actual	Unit	Unit Price	Price	Remarks	
(3)Farm Road							
1. Main Road (A)-Line L=434m W=5m							
Excavating and Removing of Top-soil	3,320.00	3,320.00	m3	16.40	54,448		
Embankment of Sub-soil	2,084.00	2,084.00	m3	17.70	36,887		
Turning back of Top-soil	3,320.00	3,320.00	m3	16.40	54,448		
Arrangement of Road Face	3,470.00	3,470.00	m2	2.90	10,063		
Pavement by Laterite	174.00	0.00	m3	100.00	0		
Compacting by Tire Roller	2,083.00	2,083.00	m3	12.30	25,621		
Protecting of Slope	868.00	0.00	m2	50.90	0		
Sub-total					181,467		
2.Branch Road, (D) Line L=195m W=4m							
Excavating and Removing of Top-soil	1,316.00	1,316.00	m3	16.40	21,582		
Embankment of Sub-soil	819.00	819.00	m3	19.70	16,134		
Turning back of Top-soil	1,316.00	1,316.00	m3	16.40	21,582		
Arrangement of Road Face	1,365.00	1,365.00	m2	2.90	3,959		
Pavement by Laterite	59.00	0.00	m3	100.00	0		
Compacting by Tire Roller	819.00	819.00	m3	12.30	10,074		
Protecting of Slope	390.00	0.00	m2	50.90	0		
Sub-total					73,331		
3 Branch Road (E)Line L=190m W=4m							
Excavating and Removing of Top-soil	1,283.00	1,283.00	m3	16.40	21,041		
Embankment of Sub-soil	798.00	798.00	m3	19.70	15,721		
Turning back of Top-soil	1,283.00	1,283.00	m3	16.40	21,041		
Arrangement of Road Face	1,330.00	1,330.00	m2	2.90	3,857		
Pavement by Laterite	57.00	0.00	m3	100.00	0		
Compacting by Tire Roller	798.00	798.00	m3	12.30	9,815		
Protecting of Slope	380.00	0.00	m2	50.90	0		
Sub-total					71,475		

BILL OF QUANTITIES (Direct Cost)							
Appellation	Quantity plan	Quantity actual	Unit	Unit Price	Price	Remarks	
4.Branch Road (F)-Line L=135m W=4m							
Excavating and Removng of Top-soil	911.00	911.00	m3	16.40	14,940		
Embankment of Sub-soil	567.00	567.00	m3	19.70	11,170		
Turning back of Top-soil	911.00	911.00	m3	16.40	14,940		
Arrangement of Road Face	945.00	945.00	m2	2.90	2,741		
Pavement by Laterite	41.00	0.00	m3	100.00	0		
Compacting by Tire Roller	567.00	567.00	m3	12.30	6,974		
Protecting of Slope	270.00	0.00	m2	50.90	0		
Sub-total					50,765		
5.Branch Road (G)-Line L=115 W=4m							
Excavation and Removing of Top-soil	776.00	776.00	m3	16.40	12,726		
Embankment of Sub-soil	483.00	483.00	m3	19.70	9,515		
Turning back of Top-soil	776.00	776.00	m3	16.40	12,726		
Arrangement of Road Face	805.00	805.00	m2	2.90	2,335		
Pavement by Laterite	35.00	0.00	m3	100.00	0		
Compacting by Tire Roller	483.00	483.00	m3	12.30	5,941		
Protecting of Slope	230.00	0.00	m2	50.90	0		
Sub-total					43,243		
6.Branch Road (H)-Line L=260m W=4m							
Banking by Machine	1,950.00	1,950.00	m3	16.40	31,980		
Arrangement of Road Face	1,118.00	1,118.00	m2	2.90	3,242		
Pavement by Laterite	78.00	78.00	m3	100.00	7,800		
Compacting by Tire Roller	1,950.00	1,950.00	m3	12.30	23,985		
Protecing of Slope	520.00	0.00	m2	50.90	0		
Sub-total					67,007		

BILL OF QUANTITIES (Direct Cost)

Appellation	Quantity plan	Quantity actual	Unit	Unit Price	Price	Remarks
7,Crossover of Canal 5 places						
Concrete (Lean mixed)	17.20	0.00	m3	1,460.00	0	
Cobblestones for Bed	69.00	0.00	m3	586.00	0	
Wire Box for Gabopmade (Type II)	4.00	0.00	pc	2,492.70	0	
Sub-total					0	
Grand-total					487,288	
(4)Finishing of Field						
1.Finishing of Field	60,000.00	60,000.00	m2	2.30	138,000	
Grand-total					138,000	
(5).Irrigation Facilities						
Irrigation Facilities	1.00	1.00	set	1,327,000.00	218,000	
Grand-total					218,000	
(6)Arrangement of Building Site						
1-1,Excavating of Border	4,130.00	3,900.00	m3	31.20	121,680	
Sub-total					121,680	
1-2.Embankment by Transported Soil						
Excavating and Loading	7,600.00	6,500.00	m3	39.40	256,100	
Transporting	7,600.00	6,500.00	m3	25.70	167,050	
Spreading	10,860.00	9,290.00	m3	12.80	118,912	
Compacting by Tire Roller	10,860.00	9,290.00	m2	12.30	114,267	
Sub-total					656,329	
1-3,Culrent across Road						
Concrete pipe D 800	20.00	0.00	pc	450.00	0	
Concrete Pipe Setting	1.00	0.00	set	4,400.00	0	

BILL OF QUANTITIES (Direct Cost)							
Appellation	Quantity plan	Quantity actual	Unit	Unit Price	Price	Remarks	
Concrete	0.60	0.00	m3	1,460.00	0		
Sub-total					0		
Grand-total					778,009		
(7).Buildings							
1-1.Buildings							
Field Laboratory	1.00	1.00	set	100,400.00	673,000		
Survey and Storage House	1.00	1.00	set	842,000.00	618,000		
Machinery Store House	1.00	1.00	set	139,000.00	122,000		
Sub-total					1,413,000		
1-2.Dry Yard							
Concrete	21.60	21.60	m3	1,680.00	36,288		
Iron Bar	504.00	504.00	kg	21.00	10,584		
Lean form	6.00	6.00	m2	200.00	1,200		
Cobble Stones for Bed	21.60	21.60	m3	586.00	12,658		
Sub-total					60,730		
Grand-total					1,473,730		

BILL OF QUANTITIES (Direct Cost)							
Appellation	Quantity plan	Quantity actual	Unit	Unit Price	Price	Remarks	
(8).Carry of Materials							
1.Wire Mesh	2,526.00	1,263,000.00	m2	200.00	252,600	space 2",#11	
2.Cobble-stone	480.00	240,000.00	m3	400.00	96,000		
3.Steel pipe D 80	635.00	635.00	m	210.00	133,350		
4.PVC Pipe D 125	283.00	283.00	m	285.00	80,655		
5.PVC Pipe D 100	121.00	121.00	m	170.00	20,570		
6.PVC Pipe D 75	344.00	344.00	m	120.00	41,280		
7.PVC Pipe D 65	124.00	124.00	m	100.00	12,400		
8.PVC Pipe D 50	179.00	179.00	m	70.00	12,530		
9.Water Pump	1.00	1.00	set		180,000		
					829,385		
Grand-total							

บริษัท สุวลี จำกัด
3 หมู่ 1 ซอยศุภมิตร ถ.สุขุมวิท ต.ห้วยกะปิ อ.เมือง
บุรี 20000 โทร.038-275334-8 แฟกซ์ 274337
กรุงเทพฯ 2411122-2410581

SUVALEE CO.,LTD.
11/3 Soi Suphamitr, Sukumvith Rd., Huaykapi, Muang,
Chonburi. 20000 Tel. 038-275334-8 Fax. 274337
Bangkok Tel. 2411122-2410581

February , 1992

TO: Mr. Yoshinori Goto
Construction Supervisor

Dear Sirs:

With reference to Article 3 of the contract for construction work of the demonstration farm, we are pleased to inform you that our work has been completed.

It is respectfully requested that the interim inspection will be conducted at your earliest convenience.

Your kind attention will be highly appreciated.

Sincerely yours,

(Mr. Tanom Kriengtaweekit)
Executive Director
Suvalee Co., Ltd.

บริษัท สุวลี จำกัด
11/3 หมู่ 1 ซอยศุภมิตร ถ.สุขุมวิท ต.ห้วยกะปิ อ.เมือง
จ.ชลบุรี 20000 โทร.038 - 275334 - 8 แฟกซ์ 274337
กรุงเทพฯ 2411122 - 2410581

SUVALEE CO.,LTD.
11/3 Soi Suphamitr, Sukumvith Rd., Huaykapi, Muang
Chonburi. 20000 Tel. 038 - 275334 - 8 Fax. 27433
Bangkok Tel. 2411122 - 2410581

February , 1992

TO: Japan International Cooperation Agency
Thailand Office

INVOICE

Dear Sirs:

It is respectfully requested that the following payment be made at your earliest convenience.

Name of Project: Construction work of the demonstration farm on the agricultural development research project phase 2

The Payment: Final payment
2,220,000.-Baht (Two million two hundred twenty thousand Baht only)

Your kind attention will be highly appreciated in advance.

Sincerely yours,

(Mr. Tanom Kriengtaweekit)
Executive Director

Inspection Record IV (Final) Date 2th March 1992

Mr. Nobuji ABE
Resident Representative
Thailand Office
Japan International Cooperation Agency

Re : Construction Work of the Demonstration Farm on the Agricultural Development Research Project Phase II

As the result of Inspection, it is informed that the construction work has been achieved in conformity with drawings and specifications.

The completed amount of construction is as follows.

1) Reservoir	100%
2) Drainage Canals	100%
3) Farm Roads	100%
4) Finishing of Field	100%
5) Irrigation Facilities	100%
6) Arrangement of Building Site	100%
7) Buildings	100%
Total Evaluation	100%

Inspector (Members of Inspection Committee)

Dr. Torao Goto _____
(Team Leader of Agricultural Development Research Project)

Mr. Wisuthi Amaritsut _____
(Director of Agricultural Development Research Center)

Mr. Kazuhiko Otani _____
(Project Coordinator of Agricultural Development Research Project)

Mr. Kasem Chompoonutprapa _____
(Deputy Director of Agricultural Development Research Center)

Mr. Yoshinori Goto _____
(Supervisor)

บริษัท สุวลี จำกัด
11/3 หมู่ 1 ซอยศุภมิตร ถ.สุขุมวิท ต.ห้วยกะปิ อ.เมือง
จ.ชลบุรี 20000 โทร.038 - 275334 - 8 แฟกซ์ 274337
กรุงเทพฯ 2411122 - 2410581

SUVALEE CO.,LTD.
11/3 Soi Suphamitr, Sukumvith Rd., Huaykapi, Muang,
Chonburi. 20000 Tel. 038 - 275334 - 8 Fax. 274337
Bangkok Tel. 2411122 - 2410581

February , 1992

TO: Mr. Yoshinori Goto
Construction Supervisor

Dear Sirs:

With reference to Article 2 of the contract for construction work of the soil erosion plot; we are pleased to inform you that our work has been completed.

It is respectfully requested that the interim inspection will be conducted at your earliest convenience.

Your kind attention will be highly appreciated.

Sincerely yours,

(Mr. Tanom Kriengtaweekit)
Executive Director
Suvalee Co., Ltd.

บริษัท สุวลี จำกัด
11/3 หมู่ 1 ซอยศุภมิตร ถ.สุขุมวิท ต.ห้วยกะปิ อ.เมือง
ชลบุรี 20000 โทร.038-275334-8 แฟกซ์ 274337
กรุงเทพฯ 2411122-2410581

SUVALEE CO.,LTD.
11/3 Soi Suphamitr, Sukumvith Rd., Huaykapi, Muang,
Chonburi. 20000 Tel. 038-275334-8 Fax. 274337
Bangkok Tel. 2411122-2410581

February , 1992

TO: Japan International Cooperation Agency
Thailand Office

INVOICE

Dear Sirs:

It is respectfully requested that the following payment be made at your earliest convenience.

Name of Project: Construction work of the soil erosion plot in the demonstration farm on the agricultural development project phase 2

The Payment: 800,000.-Baht (Eight hundred thousand Baht only)

Your kind attention will be highly appreciated in advance.

Sincerely yours,

(Mr. Tanom Kriengtaweekit)
Executive Director
Suvalee Co., Ltd.

Inspection Record
Mr. Nobuji ABE
Resident Representative
Thailand Office
Japan International Cooperation Agency

Date 2th March 1992

Re : Construction Work of the Soil Erosion Plot in the Demonstration Farm on the Agricultural Development Research Project Phase II

As the result of Inspection, it is informed that the construction work has been achieved in conformity with drawings and specifications.

The completed amount of construction is as follows.

1) Run-off Plot	100%
2) Earth Work	100%
Total Evaluation	100%

Inspector (Members of Inspection Committee)

Dr. Torao Goto _____
(Team Leader of Agricultural Development Research Project)

Mr. Wisuthi Amaritsut _____
(Director of Agricultural Development Research Center)

Mr. Kazuhiko Otani _____
(Project Coordinator of Agricultural Development Research Project)

Mr. Kasem Chompoonutprapa _____
(Deputy Director of Agricultural Development Research Center)

Mr. Yoshinori Goto _____
(Supervisor)

บริษัท สุวลี จำกัด
/3 หมู่ 1 ซอยศุภมิตร ถ.สุขุมวิท ต.ห้วยกะปิ อ.เมือง
งบุรี 20000 โทร.038 - 275334 - 8 แฟกซ์ 274337
กรุงเทพฯ 2411122 - 2410581

SUVALEE CO.,LTD.
11/3 Soi Suphamitr, Sukumvith Rd., Huaykapi, Muang,
Chonburi. 20000 Tel. 038 - 275334 - 8 Fax. 274337
Bangkok Tel. 2411122 - 2410581

February , 1992.

TO: Mr. Yoshinori Goto

Construction Supervisor.

Dear Sirs:

With reference to Article 2 of the contract for construction work of miscellaneous works, we are pleased to inform you that our work has been completed.

It is respectfully requested that the interim inspection will be conducted at your earliest convenience.

Your Kind attention will be highly appreciated

Sincerely yours..

(Mr. Tanom Kriengtaweekit)

Executive Director

Suvalee Co., Ltd.

บริษัท สุวลี จำกัด
/3 หมู่ 1 ซอยศุภมิตร ถ.สุขุมวิท ต.ห้วยกะปิ อ.เมือง
เบุรี 20000 โทร.038 - 275334 - 8 แฟกซ์ 274337
กรุงเทพฯ 2411122 - 2410581

SUVALEE CO.,LTD.
11/3 Soi Suphamitr, Sukumvith Rd., Huaykapi, Muang,
Chonburi. 20000 Tel. 038 - 275334 - 8 Fax. 274337
Bangkok Tel. 2411122 - 2410581

February , 1992

TO : Japan International Cooperation Agency
Thailand Office

INVOICE

Dear Sirs:

It is respectfully requested that the following payment be made at your earliest convenience.

Name of Project : Construction work of Miscellanecus works in the demonstration farm on the agricultural development project phase 2

The Payment: 600,000.- Baht (Six Hundred Thousand Baht only)

Your kind attention will be highly appreciated in advance.

Sincerely yours,

(Mr. Tanom Kriengtaweekit)
Executive Director
Suvalee Co., Ltd.

Inspection Record
Mr. Nobuji ABE
Resident Representative
Thailand Office
Japan International Cooperation Agency

Date 2th March 1992

Re : Construction Work of Miscellaneous Works in the Demonstration Farm on the Agricultural Development Research Project Phase II

As the result of Inspection, it is informed that the construction work has been achieved in conformity with drawings and specifications.

The completed amount of construction is as follows.

1) Sign Board	100%
2) Base of National Flag	100%
3) Name Board	100%
4) Crossing Gate	100%
5) Underdrain Work	100%
6) Curb Work	100%
7) Finishing of Field	100%
8) Sprinkler Work	100%
9) Water Tank Work	100%
Total Evaluation	100%

Inspector (Members of Inspection Committee)

Dr. Torao Goto _____
(Team Leader of Agricultural Development Research Project)

Mr. Wisuthi Amaritsut _____
(Director of Agricultural Development Research Center)

Mr. Kazuhiko Otani _____
(Project Coordinator of Agricultural Development Research Project)

Mr. Kasem Chompoonutprapa _____
(Deputy Director of Agricultural Development Research Center)

Mr. Yoshinori Goto _____
(Supervisor)

資料千-2, 完成出来高調書

1 排水路工

1-1. 中央排水路 (Bライン)

測 点	設計値	出来高値
1-1-1, (B)-1ライン		
W (幅)		
NO.0	7.400	7.500
NO.1	7.400	7.450
NO.2	7.400	7.380
NO.3	7.400	7.480
NO.4	7.400	7.600
NO.5	7.400	7.530
NO.6	7.400	7.610
NO.6+23.0	7.400	7.740
L (延長)		
	170.000	173.000
コドン管, II型		
枚	45	45
1-1-2, (B)-2ライン		
W (幅)	9.200	9.280
NO.0	9.200	9.310
NO.1	9.200	9.400
NO.2	9.200	9.330

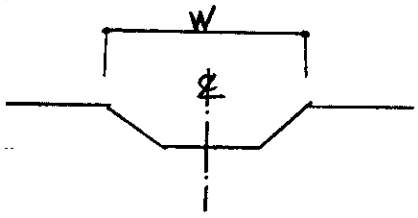

測　点	設計値	出高値
NO.3	9.200	9.380
NO.4	9.200	9.210
NO.5	9.200	9.450
NO.6	9.200	9.260
NO.6+8.0	9.200	9.210
∠(延長)		
	150.000	158.000
フトン篭I型		
枚	24	24
フトン篭II型		
枚	24	24

1-2, 支線排水路（Dライン）

測　点	設計値	出来高値
1-2-1, (D)-1ライン		
W(幅)	2.900	3.100
NO. 0	2.900	2,930
NO. 1	2.900	2.990
NO. 2	2.900	3.020
NO. 3	2.900	3.140
NO. 4	2.900	2.940
NO. 4+6.0	2.900	2.910
∠(延長)		
	101.000	106.000
フトン篭 I型		
枚	8	8
1-2-2, (D)-2ライン		
W(幅)	2.900	2.900
NO. 0	2.900	2.950
NO. 1	2.900	2.910
NO. 2	2.900	3.030
NO. 3	2.900	3.110
NO. 3+12.0	2.900	2.990

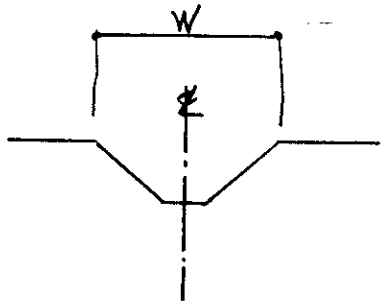

測　点	設計値	出高値
L(延長)		
	85.000	87.000
フトン篭工型		
枚	5	5

1-3, 支線排水路 (Aライン)

測　点	設計値	出来高値
1-3-1, (A)-1ライン		
W(幅)	3.800	3,930
NO.0	3.800	3,890
NO.1	3.800	3.810
NO.2	3.800	3,970
NO.3	3.800	3,850
NO.4	3.800	3,980
NO.4+5.0	3.800	3.830
L (延長)		
	101.000	105.000
コンクリート工型		
枚	16	16
1-3-2, (A)-2ライン		
NO.0	4.400	4.510
NO.1	4.400	4.430
NO.2	4.400	4.490
NO.2+17.0	4.400	4.510
L (延長)		
	64.000	67.000

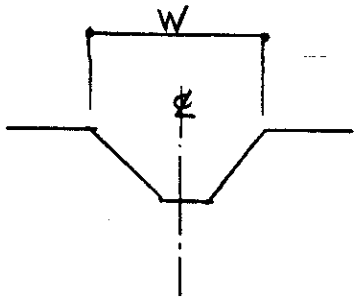

測　点	設計値	出高値
フトン篭I型		
枚	八3	八3

1-4, 支線排水路（Eライン）

測　点	設計値	出来高値
1-4-1, (E)-1ライン		
W（幅）		
NO. 0	±.700	±.520
NO. 1	±.700	±.790
NO. 2	±.700	±.710
NO. 3	±.700	±.560
NO. 3+21.0	±.700	±.760
∠（延長）		
	95.000	96.000
1-4-2, (E)-2ライン		
W（幅）		
NO. 0	±.700	±.730
NO. 1	±.700	±.780
NO. 2	±.700	±.510
NO. 3	±.700	±.550
NO. 3+18.0	±.700	±.530
∠（延長）		
	90.000	93.000

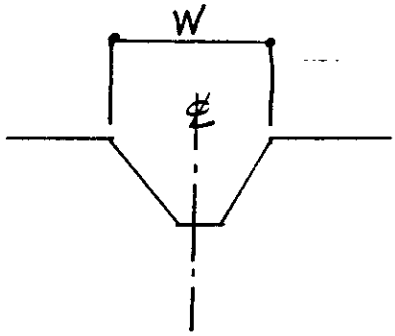

測点	設計値	出高値
トンカツ工程		
枚	5	5

1-5, 西側排水路（Cライン）

測　点	設計値	出来高値
1-5-1, (C)-1ライン		
W(幅)		
NO.0	3.800	3.910
NO.1	3.800	3.850
NO.2	3.800	3.890
NO.3	3.800	3.930
NO.4	3.800	3.840
NO.5	3.800	3.870
NO.6	3.800	3.920
NO.7	3.800	3.840
NO.7+10.5	3.800	3.820
L (延長)		
	85.000	85.500
ブロック工型		
	23	23
1-5-2, (C)-2ライン		
W(幅)	4.400	4.530
NO.0	4.400	4.490
NO.1	4.400	4.410

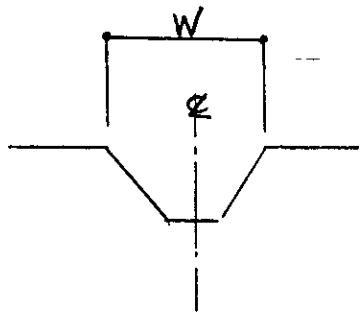

測　点	設計値	出高値
NO.2	4.400	4.590
NO.3	4.400	4.490
NO.4	4.400	4.480
NO.4+18.0	4.400	4,530
∠(延長)		
	115.000	118.000
ブトン管理		
枚	18	18
1-5-3,(C)-3ライン		
W(幅)		
NO.0	4.700	4.730
NO.1	4.700	4.790
NO.2	4.700	4,720
NO.3	4.700	4,830
NO.4	4.700	4,800
NO.4+2.0	4.700	4.890
∠(延長)		
	100.000	102.000
ブトン管理		
枚	73	73

2. 道路工

測　点	設計値	出来高値
2-1, 幹線道路 (A)ライン		
W(幅)		
NO.0	5.000	5.030
NO.1	5.000	5.110
NO.2	5.000	5.080
NO.3	5.000	5.130
NO.4	5.000	5.050
NO.5	5.000	5.090
NO.6	5.000	5.120
NO.7	5.000	5.070
NO.8	5.000	5.160
NO.8+37.0	5.000	5.210
L (延長)		
	↗37.000	↗37.000
2-2, 支線道路 (D)ライン		
W(幅)		
NO.0	4.000	4.090
NO.1	4.000	4.130
NO.2	4.000	4.210
NO.3	4.000	4.150

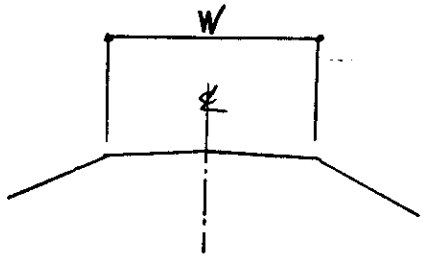

測　点	設計値	出高値
NO.3+10.0	×.000	×.080
∠(延長)		
	195.000	200.000
2-3, 支線道路(E)ライン		
W(幅)		
NO.0	×.000	×.130
NO.1	×.000	×.150
NO.2	×.000	×.030
NO.3	×.000	×.090
NO.3+41.0	×.000	×.110
∠(延長)		
	190.000	191.000
2-4, 支線道路(F)ライン		
W(幅)		
NO.0	×.000	×.040
NO.1	×.000	×.000
NO.2	×.000	×.120
NO.2+37.0	×.000	×.090
∠(延長)		

測　点	設計値	出高値
	135.000	137.000
2-5, 支線道路(G)ライン		
W(幅)		
NO.0	±.000	±.130
NO.1	±.000	±.020
NO.2	±.000	±.110
NO.2+18.0	±.000	±.080
∠(延長)	115.000	118.000
2-6, 支線道路(H)ライン		
NO.0	±.000	±.050
NO.1	±.000	±.130
NO.2	±.000	±.090
NO.3	±.000	±.180
NO.4	±.000	±.090
NO.5	±.000	±.180
NO.5+13.0	±.000	±.050
∠(延長)	260.000	263.000

3, 畑地灌漑施設工

測点	設計値	出来高値
3-1, 揚水部管伏設工(スチール部)		
L (延長)		
	510.000	513.000
3-2, 配水部管伏設工(PVC部)		
L (延長)		
	1.028.000	1.033.000
3-3, 吸水部管伏設工		
L (延長)		
	100.000	98.000
3-4, 水槽		
W1 (幅)	7.000	7.010
W2 (〃)	5.500	5.530
H (高さ)	2.850	2.890
a (厚さ)	250	260
b (厚さ)	230	240

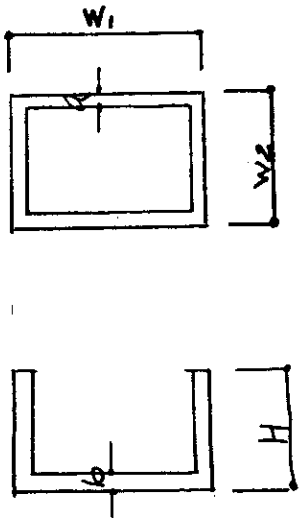

測　点	設計値	出高値
3-5, ポンプ小屋		
布基礎		
W1 (幅)	500	520
W2 (〃)	90	95
H1 (高さ)	150	158
H2 (〃)	550	552
梁		
W (幅)	90	93
H (高さ)	500	503

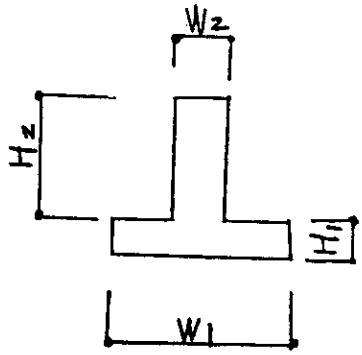

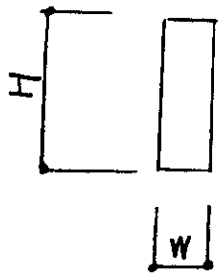

ヌ，建築工事

測　点	設計値	出来高値
ヌ-1，試験室		
布基礎	(※測点は任意)	
W1(幅)	500	508
W2(〃)	120	123
H1(高さ)	200	211
H2(〃)	1,150	1153
W1(幅)	500	503
W2(〃)	120	122
H1(高さ)	200	200
H2(〃)	1,150	1151
W1(幅)	500	501
W2(〃)	120	120
H1(高さ)	200	209
H2(〃)	1,150	1150
W1(幅)	500	503
W2(〃)	120	120
H1(高さ)	200	201
H2(〃)	1,150	1152

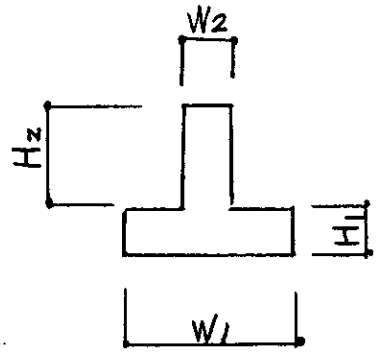

測　点	設計値	出高値
梁（※測点は任意）		
W（幅）	120	122
H（高さ）	900	905
W（幅）	120	121
H（高さ）	900	903
W（幅）	120	120
H（高さ）	900	901
W（幅）	120	124
H（高さ）	900	900

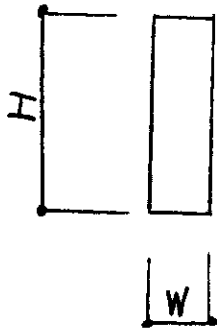

測　点	設計値	出来高値
ケ-2,計測室並びに貯蔵庫		
布基礎(※測点は任意)		
W1(幅)	500	508
W2(〃)	120	123
H1(高さ)	200	206
H2(〃)	1,150	1150
W1(幅)	500	502
W2(〃)	120	123
H1(高さ)	200	204
H2(〃)	1,150	1152
W1(幅)	500	503
W2(〃)	120	124
H1(高さ)	200	200
H2(〃)	1,150	1,150
W1(幅)	500	503
W2(〃)	120	124
H1(高さ)	200	201
H2(〃)	1,150	1,151

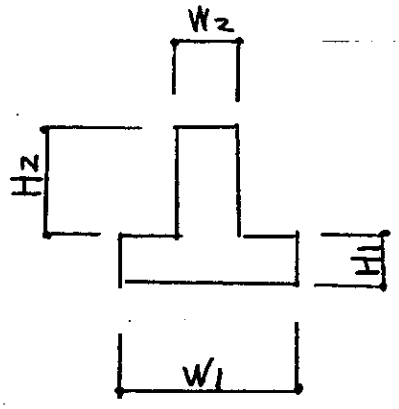

測　点	設計値	出高値
梁(※測点は任意)		
W(幅)	120	123
H(高さ)	900	902
W(幅)	120	120
H(高さ)	900	900
W(幅)	120	123
H(高さ)	900	905
W(幅)	120	123
H(高さ)	900	903

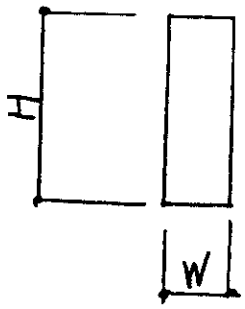

測点	設計値	出来高値
4-3, 倉庫		
独立基礎(※測点は任意)		
W1 (幅)	1,500	1510
W2 (〃)	1,500	1520
W3 (〃)	350	355
W4 (〃)	350	353
H1 (高さ)	300	302
H2 (〃)	400	400
W1 (幅)	1,500	1,500
W2 (〃)	1,500	1530
W3 (〃)	350	351
W4 (〃)	350	350
H1 (高さ)	300	301
H2 (〃)	400	402

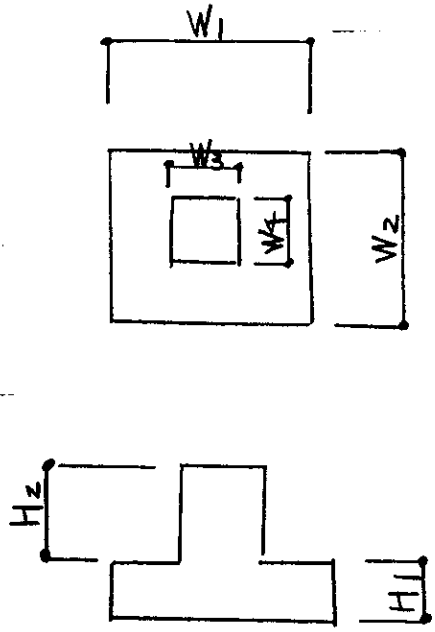

測　点	設計値	出来高値
ケース乾燥場		
W1（幅）	18.000	18.010
W2（〃）	12.000	12.030
a1（厚さ）	100	103
a2（〃）	100	110
a3（〃）	100	113
a4（〃）	100	120

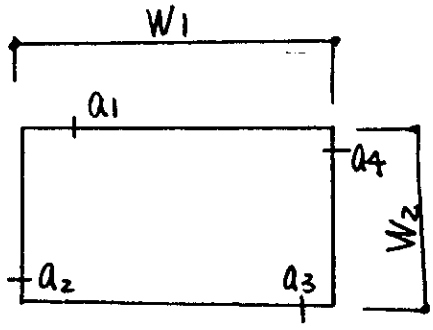

Construction Schedule

18th September 1991 No. ____

Item	Sept	Oct.	Nov.	Dec.	Jan.	Feb.	Mar.	Remark
1. Preparation for Start								
2. Reservoir								
2-1. 1st Excavation								
2-2 2nd "								
3. Drainage Canal		Excavating	Gabionade Setting			Protection of Slope		
4. Farm Road			Excavating, Banking, Compacting			Pavement		
5. Irrigation Facilities		Water Tank	Excavating	Setting of Pipes and Others	Pump Setting	Water run Test		
6. Run-off Plots			Arrangement of Land	Frames				
7. Finishing of Field								
8. Building (include Pump House)		Basement	from Column setting to Roofing		Interior, Exterior	Water supply Electricity		
9. Final Inspection								
10. Electricity Installation				High Power Work of Outside	Low power Work of Inside	Start of Power supply		

コクヨ シヨ-15 (35×32)

別紙 4-3. 業者よりの工程表

資料4-4; 工事実施状況報告書

工事実施状況報告書（その1）

（平成3年9月17日～9月21日）

月日(曜日)	(日)	(月)	9/17(火)	18(水)	19(木)	20(金)	21(土)
天候			晴	晴	晴	晴	晴

作業記事及び監督事項		備考
仮設工事	・準備（現地監察） ・現場事務所の設置位置決定 ・工事図面の説明 ・測量手順の打合せ（BMの位置確認, etc） ・現場事務所設置	

工事実施状況報告書（その2）

（平成3年9月22日～9月28日）

月日(曜日)	22(日)	23(月)	24(火)	25(水)	26(木)	27(金)	28(土)
天候	曇	晴	晴	晴	晴	晴	晴 一時雨

作業記事及び監督事項		備考
仮設工事 本体工事	・土工機械（BH, BD, DT, FT）到着（9/23午後） ・現場事務所の設置完了 1. Arrangement of Building Site ・測量開始〈国道及び隣地の境界線に留意して測量するように指示〉 ・建築敷地内の表土はぎとり開始〈敷地内の木をキズつけたり倒さないように指示〉	

工事実施状況報告書（その3）

（平成3年9月29日~10月5日）

月日(曜日)	29(日)	30(月)	10/1(火)	2(水)	3(木)	4(金)	5(土)
天候	晴	晴	晴	晴	晴	晴のち曇	晴

作業記事及び監督事項		備考
本体工事	1. Arrangement of Building Site ・建築敷地内の表土はぎとり表土仮置完了 ・やり方出し完了	

工事実施状況報告書（その4）

（平成3年10月6日~10月12日）

月日(曜日)	6(日)	7(月)	8(火)	9(水)	10(木)	11(金)	12(土)
天候	晴	晴	晴時々曇	晴	晴	晴	晴

作業記事及び監督事項		備考
本体工事	1. Arrangement of Building Site ・建築敷地内周辺より土砂を運搬し切土，盛土開始（建物位置の盛土は良質土を運搬し荷出し屋に留意して，転圧を十分にするよう指示）	

工事実施状況報告書（その5）

（平成3年10月13日~10月19日）

月日(曜日)	13(日)	14(月)	15(火)	16(水)	17(木)	18(金)	19(土)
天候	晴	晴	晴 時々小雨	晴	曇	晴	晴

作業記事及び監督事項		備考
本体工事	1. Arrangement of Building Site ・建築敷地内切土，盛土，周辺掘削 〈周辺掘削(空掘)の法面はBHのバケットで十分に押えて転圧するよう指示〉	

工事実施状況報告書（その6）

（平成3年10月20日~10月26日）

月日(曜日)	20(日)	21(月)	22(火)	23(水)	24(木)	25(金)	26(土)
天候	晴	晴 のち曇	晴	晴	晴	晴	晴

作業記事及び監督事項		備考
本体工事	1. Arrangement of Building Site ・建築敷地内切土，盛土，周辺掘削	

工事実施状況報告書（その7）

（平成3年10月27日～11月2日）

月日(曜日)	27(日)	28(月)	29(火)	30(水)	31(木)	11/1(金)	2(土)
天候	晴	晴	晴	晴	晴	晴	晴

	作業記事及び監督事項	備考
本体工事	1. Arrangement of Building Site ・建築敷地内切土，盛土，周辺掘削完了 2. Farm Roads ・測量開始〈盛土厚が平均60cm～70cmになるよう留意して計画高を決めるよう指示〉	

工事実施状況報告書（その8）

（平成3年11月3日～11月9日）

月日(曜日)	3(日)	4(月)	5(火)	6(水)	7(木)	8(金)	9(土)
天候	晴	晴時々曇	晴のち曇	晴	晴	晴	晴時々曇

	作業記事及び監督事項	備考
本体工事	1. Farm Roads ・A，D，F，Gライン やり方出し ・A．D．F．Gライン 表土はぎとり〈道路の法尻より5mはなして表土を仮置するよう指示〉 2. Buildings ・試験室－基礎工事〈基礎部分が盛土のため不等沈下が発生しやすいので，根切完了後ランマーによる転圧と割栗石をていねいに敷ならべるように指示〉	

工事実施状況報告書（その9）

（平成3年11月10日～11月16日）

月日(曜日)	10(日)	11(月)	12(火)	13(水)	14(木)	15(金)	16(土)
天候	晴	晴のち雨	晴	晴	晴	晴時々曇	晴

作業記事及び監督事項		備考
本体工事	1. Farm Roads ・A.D.F.Gライン盛土開始(表土がまじらないよう注意し、盛土における巻出し厚に留意して転圧するよう指示) 2. Buildings ・試験室ー基礎工事完了(鉄筋の組立、定着のチェックと、コンクリート打設後の養生(散水)を十分に行うよう指示) ・車庫ー基礎工事(アンカーボルト設置は仮史を作り位置を決めるよう指示) ・水槽ー基礎工事、配筋、コンクリート工事 ・ポンプ小屋ー基礎工事コンクリートブロック積	

工事実施状況報告書（その10）

（平成3年11月17日～11月23日）

月日(曜日)	17(日)	18(月)	19(火)	20(水)	21(木)	22(金)	23(土)
天候	晴	晴のち雨	晴のち雨	晴	晴	晴	晴

作業記事及び監督事項		備考
本体工事	1. Farm Roads ・A.D.F.Gライン盛土 2. Buildings ・計測室並びに貯蔵庫ー基礎工事 ・車庫ー基礎工事完了 ・水槽ーコンクリート工事完了 ・ポンプ小屋ーコンクリートブロック積完了	

工事実施状況報告書（その11）

（平成3年11月24日~11月30日）

月日(曜日)	24(日)	25(月)	26(火)	27(水)	28(木)	29(金)	30(土)
天候	雨	晴	晴	晴	晴のち曇	晴	晴

作業記事及び監督事項		備考
本体工事	1. Farm Road ・A, Dライン盛土完了 2. Buildings ・計測室並びに貯蔵庫 — 基礎工事完了 ・乾燥場 — 基礎栗石, 配筋, コンクリート打設完了〈コンクリート打設後養生(散水)を十分に行うよう指示〉 ・ポンプ小屋 — 屋根組完了	

工事実施状況報告書（その12）

（平成3年12月1日~12月7日）

月日(曜日)	12/1(日)	2(月)	3(火)	4(水)	5(木)	6(金)	7(土)
天候	晴	晴	曇	晴	晴	晴時々曇	晴

作業記事及び監督事項		備考
本体工事	1. Farm Road ・F, Gライン盛土完了 ・A, Dライン ラテライト敷均し 2. Buildings ・試験室 — コンクリート, コンクリートブロック工事〈コンクリートブロック工事のブロック割, 開口部の位置etcを十分にチェックするよう指示〉 3. Drainage Canals ・Cライン掘削〈法面をBHのバケットで十分に押えて転圧するよう指示〉	

工事実施状況報告書（その13）

（平成3年12月8日~12月14日）

月日(曜日)	8(日)	9(月)	10(火)	11(水)	12(木)	13(金)	14(土)
天候	曇	晴	晴	晴のち曇	晴	晴	晴

作業記事及び監督事項		備考
本体工事	1. Farm Road ・A.Dラインラテライト敷均し完了 ・F.Gラインラテライト敷均し 2. Buildings ・試験室―コンクリート，コンクリートブロック工事完了 ・計測室並びに貯蔵庫―コンクリート，コンクリートブロック工事 3. Drainage Canals ・Cライン掘削完了，ストンカゴ工〈割栗石をすき間があかないよう積むよう指示〉 ・Dライン掘削完了	

工事実施状況報告書（その14）

（平成3年12月15日~12月21日）

月日(曜日)	15(日)	16(月)	17(火)	18(水)	19(木)	20(金)	21(土)
天候	晴	晴	晴	晴	晴	曇	晴

作業記事及び監督事項		備考
本体工事	1. Farm Road ・F.Gラインラテライト敷均し完了 ・E.Hライン盛土〈Hラインはダムに接するため良質土による盛土を行うよう指示〉 2. Buildings ・試験室―鉄骨工事〈サビ止め塗料を十分に行うよう指示〉 ・計測室並びに貯蔵庫―コンクリート，コンクリートブロック工事完了 3. Drainage Canals ・Cラインストンカゴ工完了 ・Dラインストンカゴ工完了	

工事実施状況報告書（その15）

（平成3年12月22日～12月28日）

月日(曜日)	22(日)	23(月)	24(火)	25(水)	26(木)	27(金)	28(土)
天候	晴	曇	晴	晴	晴のち雨	晴	雨のち雨

作業記事及び監督事項		備考
本体工事	1. Farm Road ・E.Hライン盛土，ラテライト敷均し完了 2. Buildings ・試験室－屋根工事（スレートの取付金物を十分にしめつけ．完了後一度チェックするよう指示） ・計測室並びに貯蔵庫－鉄骨工事 ・車庫－鉄骨工事，屋根工事完了 3. Drainage Canals ・A.Bライン掘削	

工事実施状況報告書（その16）

（平成3年12月29日～ 月 日）
平成4年

月日(曜日)	29(日)	30(月)	31(火)	1/1(水)	2(木)	3(金)	4(土)
天候	晴	晴	晴	晴	晴	晴	晴

作業記事及び監督事項		備考
本体工事	1. Buildings ・試験室－建具工事 ・計測室並びに貯蔵庫－屋根工事完了 ・ポンプ小屋－屋根工事完了 2. Drainage Canals ・A.Bライン掘削完了．ブロンカゴ工	

工事実施状況報告書（その17）

（平成7年1月5日～1月11日）

月日(曜日)	5(日)	6(月)	7(火)	8(水)	9(木)	10(金)	11(土)
天候	晴	晴	晴	曇	晴	晴	晴のち曇

作業記事及び監督事項		備考
SO工事	・掘削〈SOの敷地内には重機を入れないよう指示〉	
本体工事	1. Buildings ・試験室―建具工事完了，外壁モルタル塗 ・計測室並びに貯蔵庫―建具工事 2. Drainage Canals ・A，Bラインフトンカゴ工完了	

工事実施状況報告書（その18）

（平成7年1月12日～1月18日）

月日(曜日)	12(日)	13(月)	14(火)	15(水)	16(木)	17(金)	18(土)
天候	雨	曇	晴	晴	晴	晴	晴

作業記事及び監督事項		備考
SO工事	・掘削，コンクリートブロック積完了	
本体工事	1. Buildings ・試験室―外壁モルタル塗完了，配管，水道工事 ・計測室並びに貯蔵庫―建具工事完了，外壁モルタル塗 ・ポンプ小屋―ポンプすえつけ完了	

工事実施状況報告書（その19）

（平成7年1月19日～1月25日）

月日(曜日)	19(日)	20(月)	21(火)	22(水)	23(木)	24(金)	25(土)
天候	晴	晴	晴	曇	晴	晴	晴

作業記事及び監督事項		備考
SO工事	・コンクリートブロック積 ・底，側面モルタル塗	
本体工事	1. Buildings ・試験室 ― 外壁モルタル塗完了，内装工事，電気，水道工事 ・計測室並びに貯蔵庫 ― 外壁モルタル塗完了 2. Irrigation Facilites ・揚水部 ― 掘削（掘削する時に凹凸がないよう掘削面を均し，ランマーで転圧するよう指示） ・配水部 ― 掘削	

工事実施状況報告書（その20）

（平成7年1月26日～2月1日）

月日(曜日)	26(日)	27(月)	28(火)	29(水)	30(木)	31(金)	2/1(土)
天候	晴	晴	晴のち曇	晴	晴	晴	晴

作業記事及び監督事項		備考
SO工事	・コンクリートブロック積完了 ・底，側面モルタル塗完了	
本体工事	1. Buildings ・試験室 ― 電気，水道工事 ・計測室並びに貯蔵庫 ― 電気，水道工事 2. Farm Roads ・A，D，ライン法面保護工完了 3. Irrigation Facilites ・揚水部 ― 配管完了 ・配水部 ― 配管完了 ・吸水部 ― 配管完了	

工事実施状況報告書（その21）

（平成7年2月2日～2月8日）

月日(曜日)	2(日)	3(月)	4(火)	5(水)	6(木)	7(金)	8(土)
天候	晴	晴	晴	曇	晴	晴	晴 のち小雨

作業記事及び監督事項		備考
SO工事	・コンクリート管設置，屋根工事完了	
雑工事	・サインボード基礎工事，石積完了	
	・国旗掲揚台一基礎工事，石積完了	
	・縁石工一縁石コンクリート設置完了	
本体工事	1. Buildings	
	・試験室一塗装工事，電気，水道工事完了	
	・計測室並びに貯蔵庫一塗装工事電気水道工事	
	・車庫一塗装工事完了，電気，水道工事完了	
	・ポンプ小屋一塗装工事完了，電気水道工事完了	
	2. Farm Roads	
	・E，Fライン法面保護工完了	
	3. Drainage Canals	
	・A，B，ライン法面保護工完了	

工事実施状況報告書（その22）

（平成7年2月9日～2月15日）

月日(曜日)	9(日)	10(月)	11(火)	12(水)	13(木)	14(金)	15(土)
天候	晴	晴	晴	晴	晴	晴	晴

作業記事及び監督事項		備考
SO工事	・配管，金物取付完了，法面保護工完了	
本体工事	1. Buildings	
	・試験室一塗装工事	
	・計測室並びに貯蔵庫一塗装工事	
	2. Farm Roads	
	・G，Hライン法面保護工	
	3. Drainage Canals	
	・C，D，E法面保護工	

工事実施状況報告書（その23）

（平成4年2月16日～2月22日）

月日(曜日)	16(日)	17(月)	18(火)	19(水)	20(木)	21(金)	22(土)
天候	曇	晴	晴	晴	晴	晴	晴

作業記事及び監督事項		備考
本体工事	1. Buildings ○試験室一塗装工事完了 ○計測室並びに貯蔵庫一塗装工事完了 2. Farm Roads ○G.Hライン法面保護工完了 3. Drainage Canals ○C.D.E法面保護工完了	

工事実施状況報告書（その24）

（平成4年2月23日～2月28日）

月日(曜日)	23(日)	24(月)	25(火)	26(水)	27(木)	28(金)	(土)
天候	晴	晴	曇	晴	晴	晴	

作業記事及び監督事項		備考
	○仮設小屋撤去，あとかたずけ，清掃	

資料4-5, 業務打合せ簿

P 1

年 月 日

業 務 打 合 せ 簿

（平成 3年 9月 18日～ 日）

業務名	東北タイ農業開発研究計画 フェーズII パイロットインフラ整備事業施工監理業務	業務番号		
		－		
打合せ場所	ADRC	会議 ・ 電話		
打合せ者	後藤			
	TOH（スワリー社）			

［特記事項］

［打合せ・協議事項］

1. 全体工事について

○仮事務所はビルディングサイトの北側に設営すること。

○圃場内に仮B.Mを10ヶ所作ること。

○圃場内の盛土部は全て表土をはぎとり，直径10cm以上の木は，掘削の時キズつけたり倒さないようにすること。

○Arrangement of Building Siteの盛土の土砂は，東，西側の圃場より運搬すること。

年　月　日

業　務　打　合　せ　簿

（平成 3 年 9 月 27 日～　日）

業務名	東北タイ農業開発研究計画フェーズII パイロットインフラ整備事業施工監理業務	業務番号		
		－		
打合せ場所	ADRC	会議・電話		
打合せ者	後藤			
	TOH（スワリー社）			

［特記事項］

［打合せ・協議事項］

1. Arrangement of Building Site について、

・表土の仮置の場所は 圃場内東西側で工事の支障のない所に仮置し、あとで圃場に還元すること。

・建物位置の盛土は、良質土を運搬して、巻出し厚に留意し転圧を十分すること。

年　月　日

業　務　打　合　せ　簿

（平成 3年 10月 24日～　日）

業務名	東北タイ農業開発研究計画 フェーズII パイロットインフラ整備事業 施工監理業務	業務番号		
		－		
打合せ場所	ADRC	会議 ・ 電話		
打合せ者	後藤			
	TOH（スワトー社）			

［特記事項］

［打合せ・協議事項］

1. 水道，国道よりの取付道路の許可申請について

・ADRCのチーフであるセリー氏にたのんで許可申請の手続をすること

2. Farm Roadsについて

・表土は，道路法尻より 5m はなれた位置に仮置し，盛土のさい草木がまじらないようにすること。

・表土のはぎとりは，一度ファームテクターで掘削し，あとでBHにより道路の両側に仮置すること。

・道路の盛土厚は平均 60～70cm として，計画高を決定すること。

年 月 日

業 務 打 合 せ 簿

（平成3年11月2日～ 日）

業務名	東北タイ農業開発研究計画 フェーズII パイロットインフラ整備事業 施工監理業務	業務番号		
		－		
打合せ場所	カンソンクワン	会議・電話		
打合せ者	後藤			
	TOH（スワリー社）			

［特記事項］

［打合せ・協議事項］

1. Buildingsについて

・試験室と計測室並びに貯蔵庫は、盛土部分になるため、布基礎の底盤部分の鉄筋をφ16として、根切り完了後ランマーによる転圧と、割栗石をていねいに敷ならべて、砕石敷均し後もう一度ランマーによる転圧をすること。

・コンクリート打設後の養生は、むしろと散水によること。

・鉄筋工事の定着と継手長さはSDとすること。

・コンクリートはレディーミストコンクリートとポータブルコンクリートミキサーと併用すね。

年　月　日

業　務　打　合　せ　簿

（平成 3年 11月 11日～　日）

業務名	東北タイ農業開発研究計画フェーズII パイロットインフラ整備事業施工監理業務	業務番号	
		－	
打合せ場所	カンソンクワン	会議 ・ 電話	
打合せ者	後藤		
	TOH（スワリー社）		

［特記事項］

［打合せ・協議事項］

1. Buildingsについて

・車庫のアンカボルト設置は仮枠を作成して位置がくるわないよう施工すること。

・試験室と計測室並びに貯蔵庫のコンクリートブロック工事におけるコンクリートブロック割はスミ出しをして開口部等の関係でまちがいがないように入念にチェックすること。

・建具の製作にはいること。

・鉄骨の製作にはいること。

年　月　日

業　務　打　合　せ　簿

（平成 3 年 11 月 25 日～　日）

業務名	東北タイ農業開発研究計画 フェーズII パイロットインフラ整備事業施工監理業務	業務番号		
		－		
打合せ場所	カンソンクワン	会議 ● 電話		
打合せ者	後藤			
	TOH（スワリー社）			

［特記事項］

［打合せ・協議事項］

1. Buildingsについて

・乾燥場のコンクリート養生は、砂をまいて、日に4回 散水養生を行うこと。

2. Drainage Canalsについて

・法面の転圧は、BHのバケットで十分押えて転圧すること。

3. Farm Roadについて、

・良質なラテライトを使用すること。

年　月　日

業　務　打　合　せ　簿

（平成 3 年 12 月 9 日～　日）

業務名	東北タイ農業開発研究計画 フェーズII パイロットインフラ整備事業 施工監理業務	業務番号		
		－		
打合せ場所	カンソンクワン	会議 ・ 電話		
打合せ者	後藤			
	TOH（スワリー社）			

［特記事項］

［打合せ・協議事項］

1. Farm Road について

・Hラインはダムに接するため良質土による盛土と転圧を十分に行うこと。

2. Buildings について

・鉄骨工事のサビ止め塗装は塗りむらがないように注意すること。

3. Drainage Canals について

・フトンカゴ工の割栗石づめは、すき間があかないようにつめること。

・割栗石の配置は、量を計算して、能率の上るように配置すること。

年　月　日

業　務　打　合　せ　簿

（平成 3 年 12 月 23 日～　日）

業務名	東北タイ農業開発研究計画 フェーズII パイロットインフラ整備事業 施工監理業務	業務番号		
		－		
打合せ場所	ADRC	会議 ・ 電話		
打合せ者	後藤			
	TOH(スワリー社)			

［特記事項］

［打合せ・協議事項］

1. Buildings について

。屋根工事におけるスレートの取付金物を十分にしめつけ、完了後一度チェックすること。

2. Run-off Plot

。圃場内の掘削位置以外は重機を入れないこと。

。コンクリートは、ポータブルコンクリートミキサーとレディーミストコンクリートによること。

年　月　日

業　務　打　合　せ　簿

（平成 4年 1月 6日～　日）

業務名	東北タイ農業開発研究計画 フェーズII パイロットインフラ整備事業施工監理業務	業務番号		
		－		
打合せ場所	ADRC	(会議)・電話		
打合せ者	後藤			
	TOH(スワリー社)			

［特記事項］

［打合せ・協議事項］

1. Buildingsについて.

・タイル，建具金物，電気器具etcの見本を提出すること。

・建物の外壁のペイントの色は白色とし，基礎立ち上りは茶色とすること。

2. Run-off Plotについて

・整流板の見本を提出すること。

3. Farm Road，Drainage Canalについて

・法面保護工のグラスは"バヒア"とし，コンケーン市より100kmはなれたボラブーより運搬すること。

・法面保護工の人員配置は40名位を目安とし，水タンク車を確保すること。

年　月　日

業　務　打　合　せ　簿

（平成 4 年 1 月 20 日～　日）

業務名	東北タイ農業開発研究計画 フェーズII パイロットインフラ整備事業 施工監理業務	業務番号		
		－		
打合せ場所	カンソンクワン	(会議)・電話		
打合せ者	後藤			
	TOH（スワリー社）			

［特記事項］

［打合せ・協議事項］

1. Irrigation Facilites

- 掘削面が凹凸のないよう均し，ランマーで転圧すること。
- Steel配管の継手部はシールを巻き，水もれがおきないようにすること。
- PVC Pipeの継手部は接着材を入念に施し，水もれがおきないようにすること。

年　月　日

業　務　打　合　せ　簿

（平成 4 年 2 月 20 日～　日）

業務名	東北タイ農業開発研究計画フェーズII パイロットインフラ整備事業施工監理業務	業務番号 －
打合せ場所	カンソンクワン	会議 ・ 電話
打合せ者	後藤	
	TOH（スワリー社）	

［特記事項］

［打合せ・協議事項］

1. その他

・仮設施設の撤去は，2月28日までに行うこと。

・完成検査は，3月2日に予定する。

・完成式は，3月5日に予定する。

年　月　日

業　務　打　合　せ　簿

（平成 4 年 2 月 27 日～　　日）

業務名	東北タイ農業開発研究計画 フェーズII パイロットインフラ整備事業 施工監理業務	業務番号		
		－		
打合せ場所	カンソンクワン	(会議)・電話		
打合せ者	後藤			
	TOH（スワリー社）			

［特記事項］

［打合せ・協議事項］

1. その他

・現場内の清掃，あとかたずけは入念に行うこと。

図　面　集

DEMONSTRATION FARM FOR PROPER LAND USE

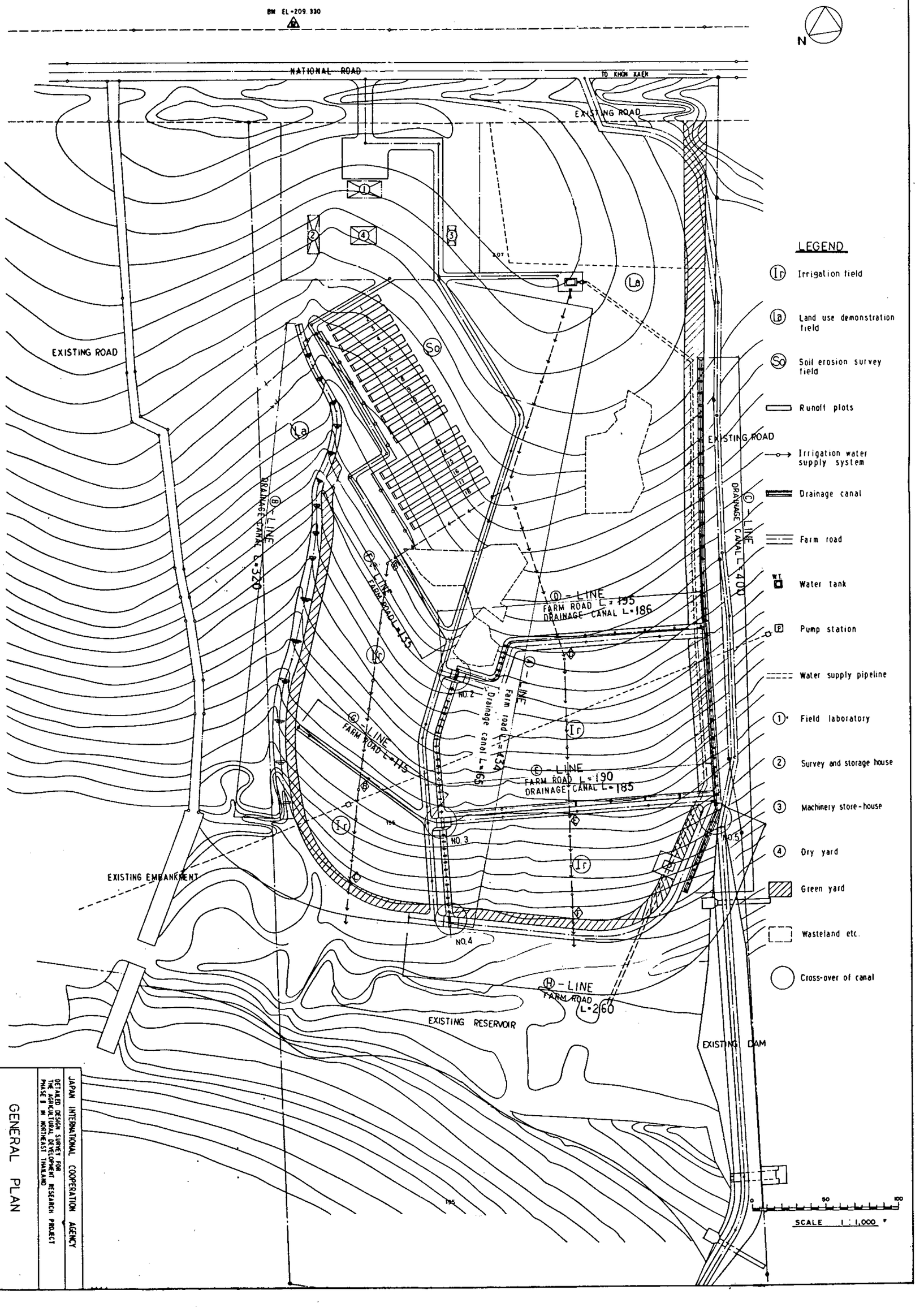

JAPAN INTERNATIONAL COOPERATION AGENCY

DETAILED DESIGN SURVEY FOR THE AGRICULTURAL DEVELOPMENT RESEARCH PROJECT PHASE II IN NORTHEAST THAILAND

GENERAL PLAN

PREPARED BY

CHECKED BY

DRAWING NO. D-1

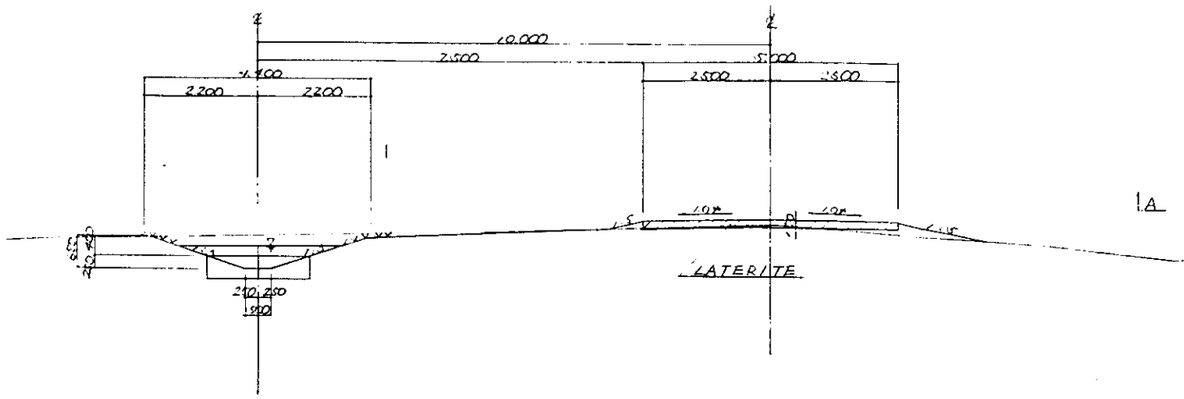

STANDARD SECTION (A)—3 TYPE S=1:50

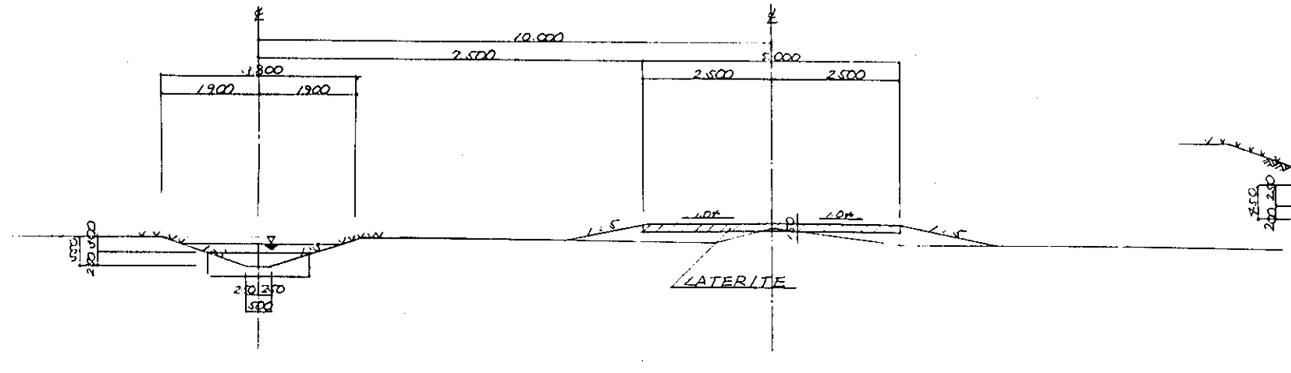

STANDARD SECTION (A)—2 TYPE S=1:50

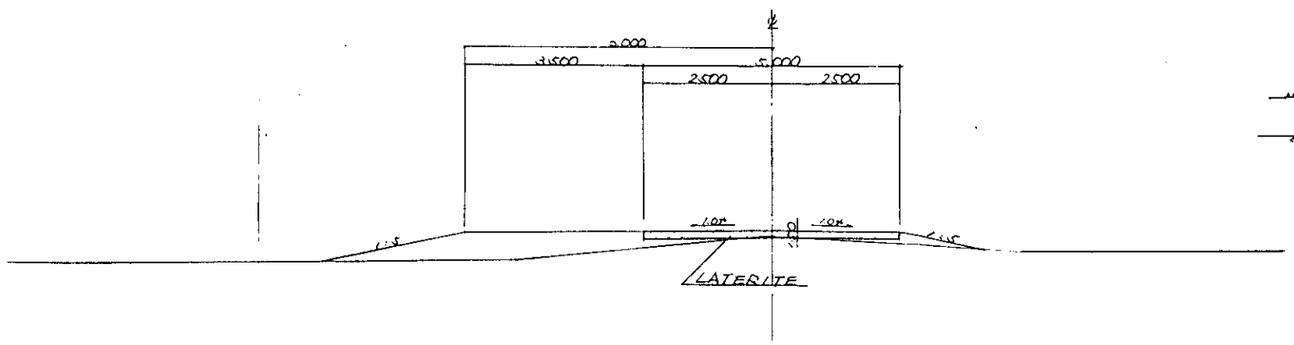

STANDARD SECTION (A)—1 TYPE S=1:50

WIRE BOX FOR GABIONADE S=1:30

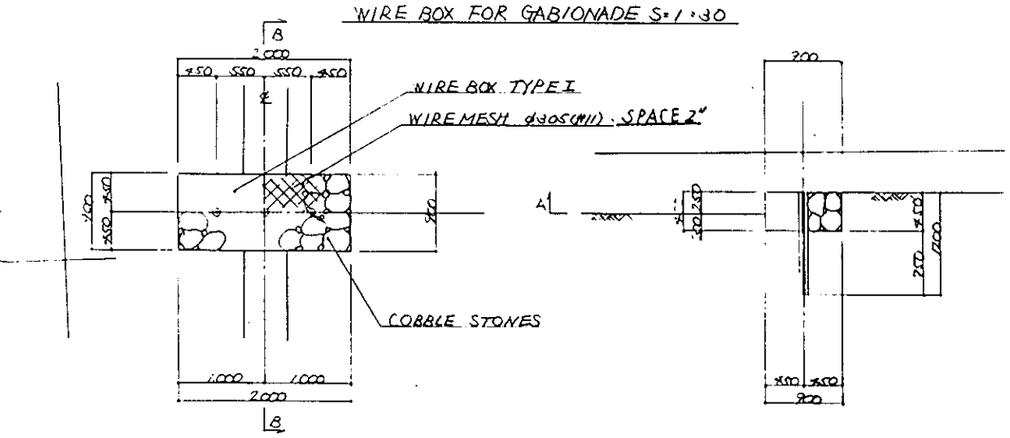

PLAN

B—B SECTION

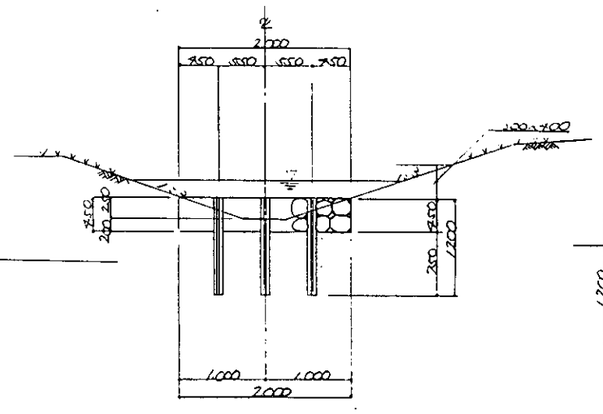

A—A SECTION

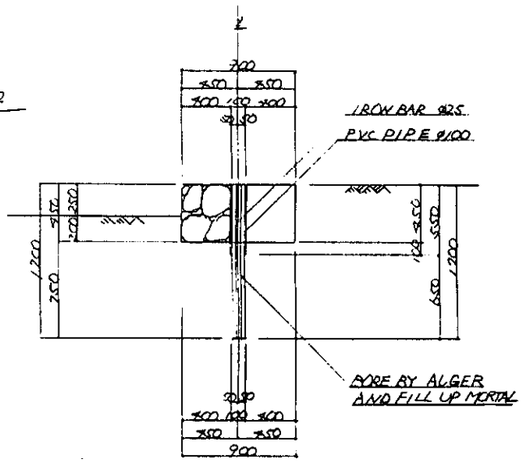

DETAILE S=1:20

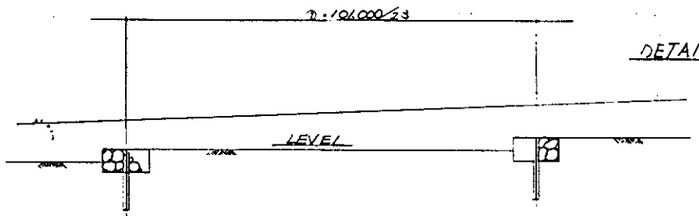

PROFILE S=1:50

SCALE 1:50
0 0.5 1 2 3 4 5 m

SCALE 1:30
0 0.2 0.4 0.6 0.8 1.0 2.0 3.0

SCALE 1:20
0 0.2 0.4 0.6 0.8 1.0 2.0 m

JAPAN INTERNATIONAL COOPERATION AGENCY

DETAILED DESIGN SURVEY FOR
THE AGRICULTURAL DEVELOPMENT RESEARCH PROJECT
PHASE II IN NORTHEAST THAILAND

FARM ROAD (A) LINE
DRAINAGE CANAL (A) LINE
STANDARD SECTION AND WIRE BOX FOR GABIONADE

PREPARED BY	DRAWING NO.
CHECKED BY	D-2

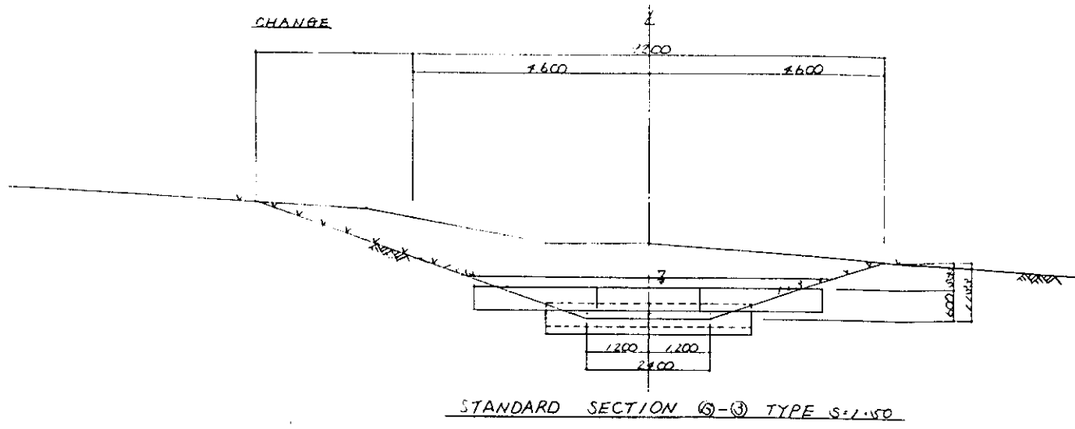

STANDARD SECTION Ⓑ-③ TYPE S:1:50

WIRE BOX FOR GABIONADE TYPE B-1 S:1:30

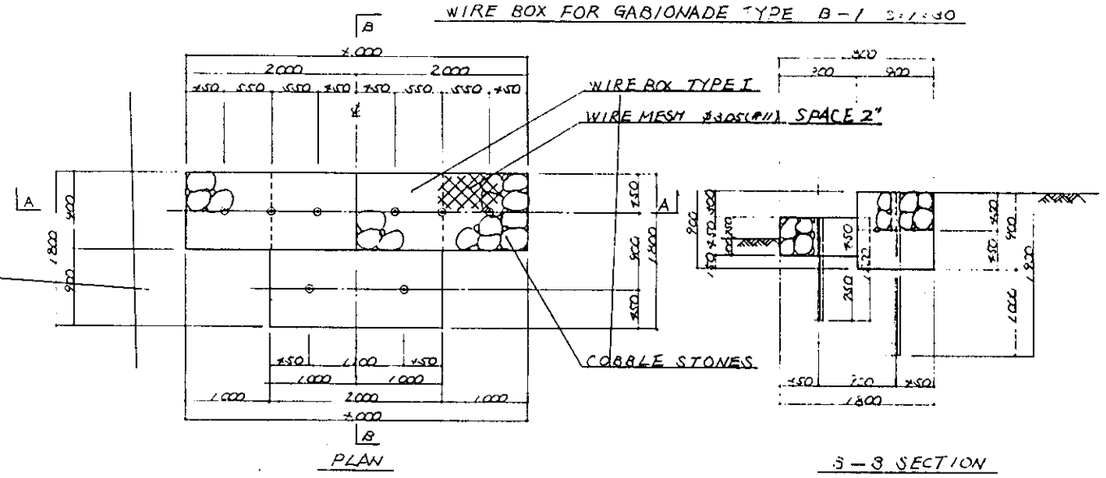

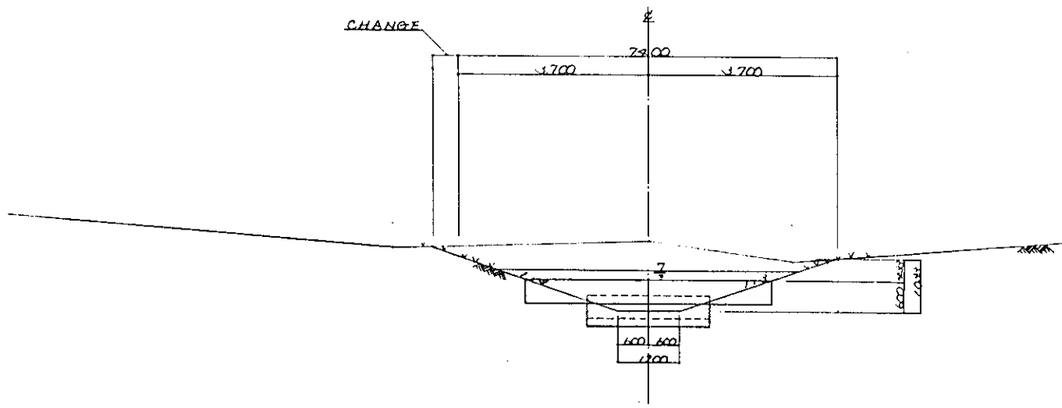

STANDARD SECTION Ⓑ-② TYPE S:1:50

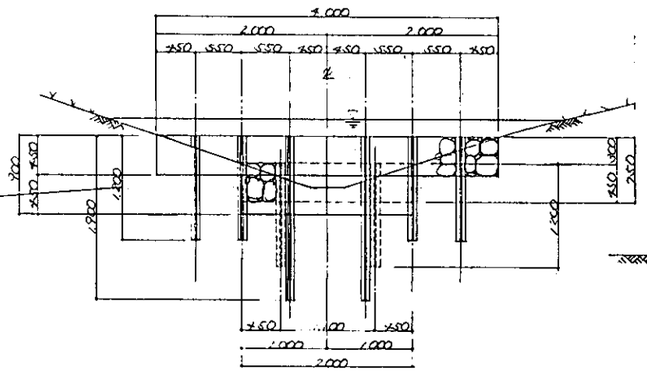

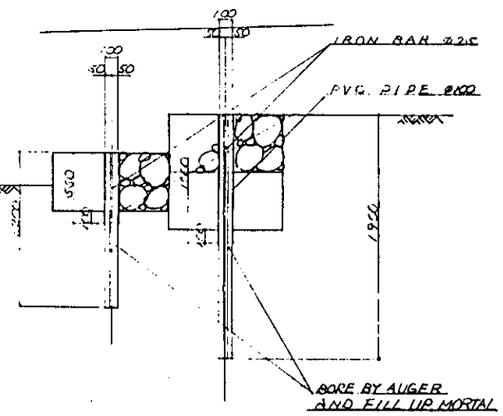

DETAILE S:1:20

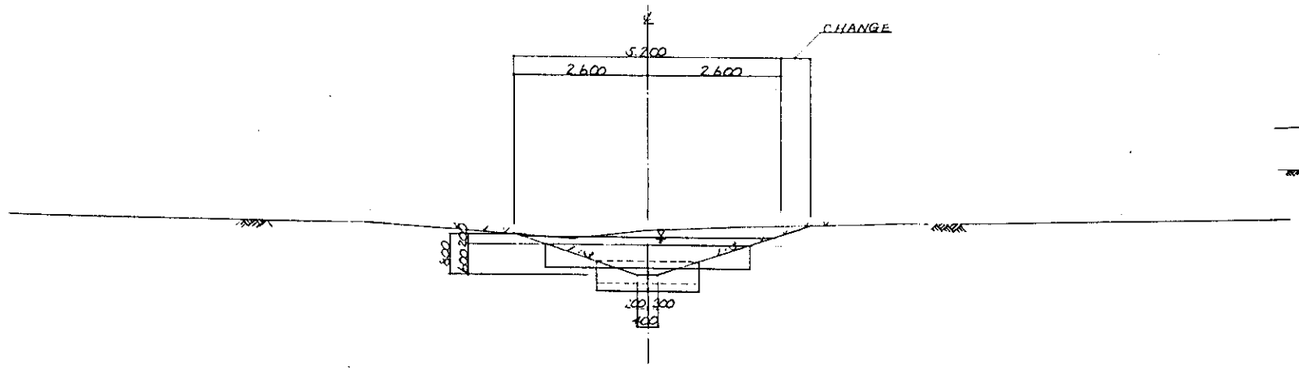

STANDARD SECTION Ⓑ-① TYPE S:1:50

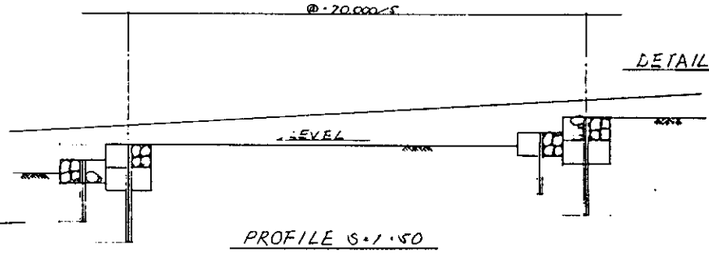

PROFILE S:1:50

SCALE 1:50

SCALE 1:30

SCALE 1:20

JAPAN INTERNATIONAL COOPERATION AGENCY

DETAILED DESIGN SURVEY FOR
THE AGRICULTURAL DEVELOPMENT RESEARCH PROJECT
PHASE II IN NORTHEAST THAILAND

DRAINAGE CANAL Ⓑ LINE STANDARD SECTION AND WIRE BOX FOR GABIONADE TYPE B-1

PREPARED BY	DRAWING NO.
CHECKED BY	D-3

WIRE BOX FOR GABIONADE TYPE B-2 S:1:30

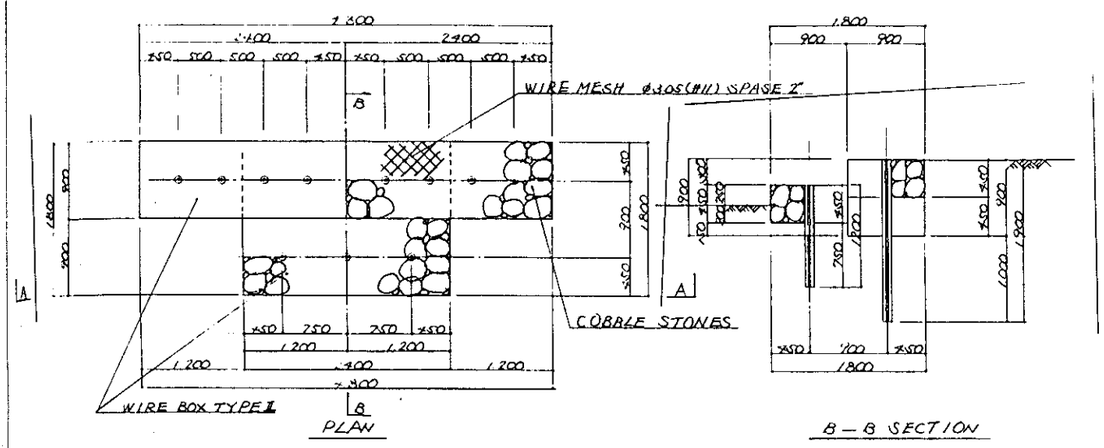

WIRE BOX FOR GABIONADE TYPE B-3 S:1:30

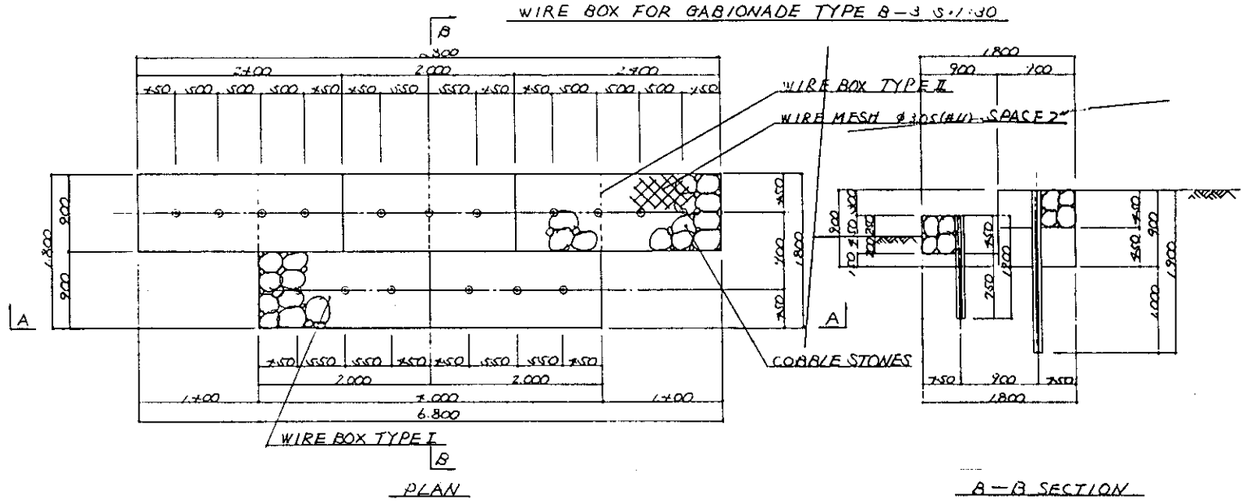

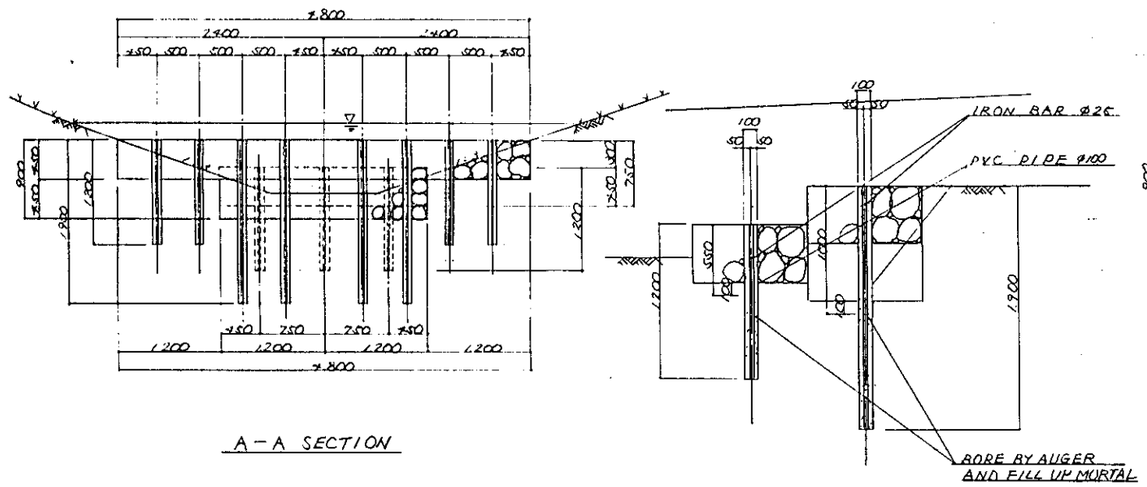

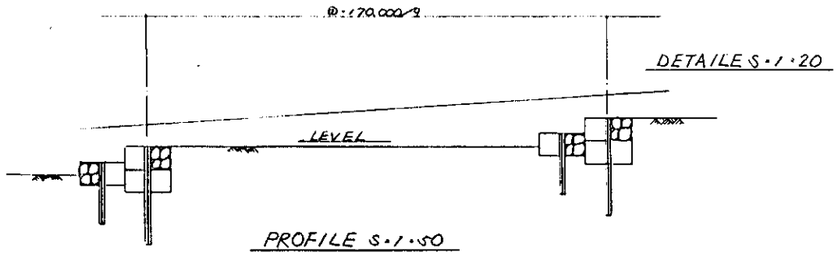

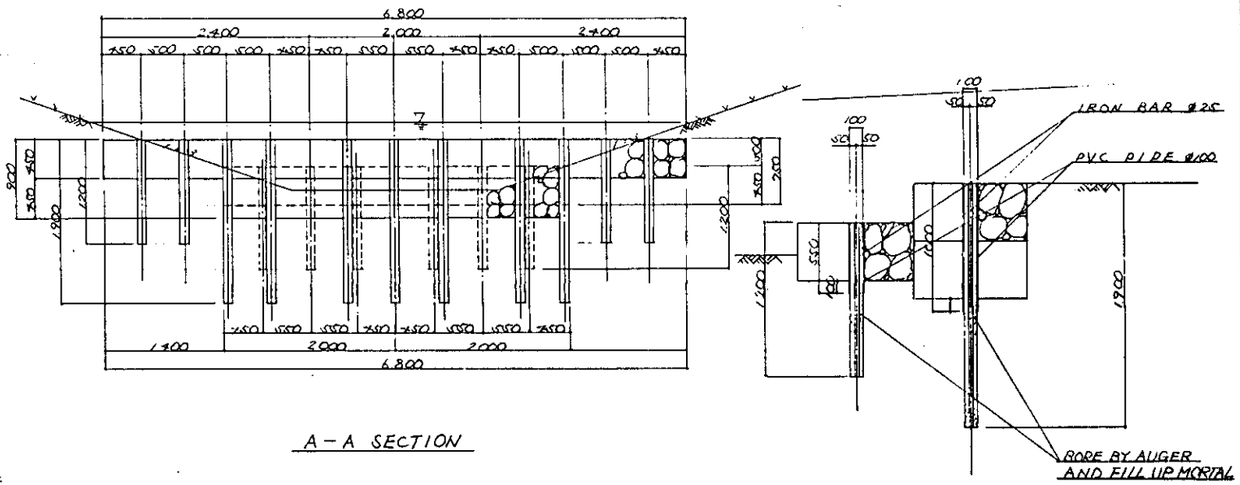

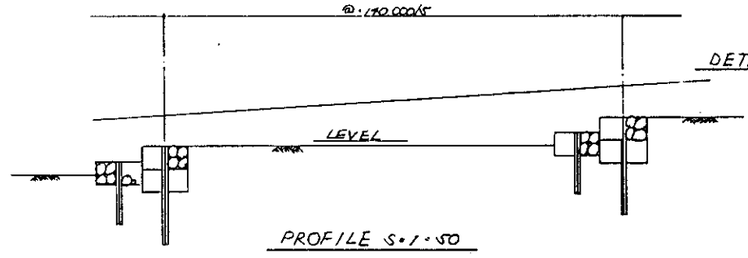

SCALE 1:50

SCALE 1:30

SCALE 1:20

JAPAN INTERNATIONAL COOPERATION AGENCY

DETAILED DESIGN SURVEY FOR
THE AGRICULTURAL DEVELOPMENT RESEARCH PROJECT
PHASE II IN NORTHEAST THAILAND

DRAINAGE CANAL Ⓑ LINE
WIRE BOX FOR GABIONADE
TYPE B-2 AND B-3

PREPARED BY	DRAWING NO.
CHECKED BY	D-4

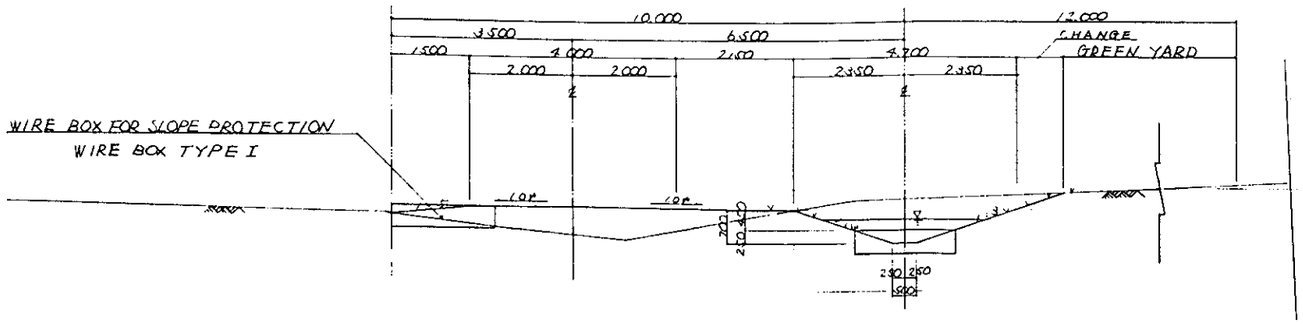

STANDARD SECTION ©-4 TYPE S=1:50

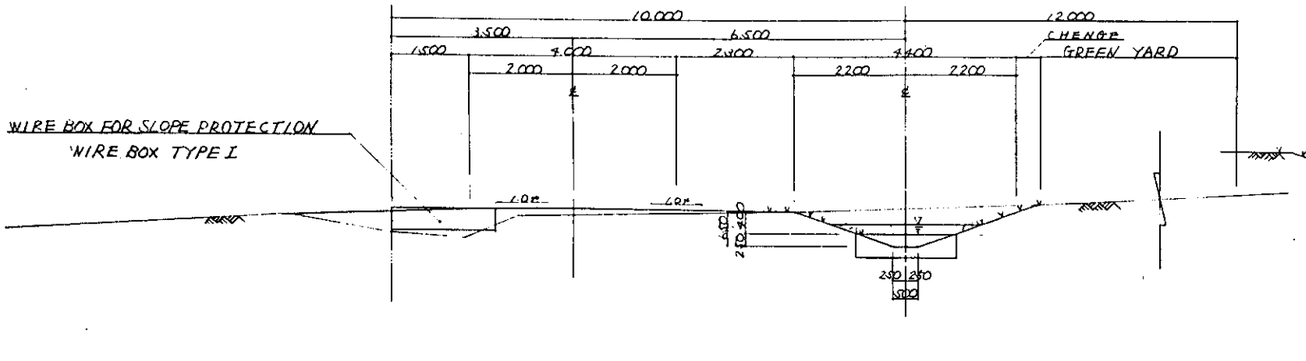

STANDARD SECTION ©-3 TYPE S=1:50

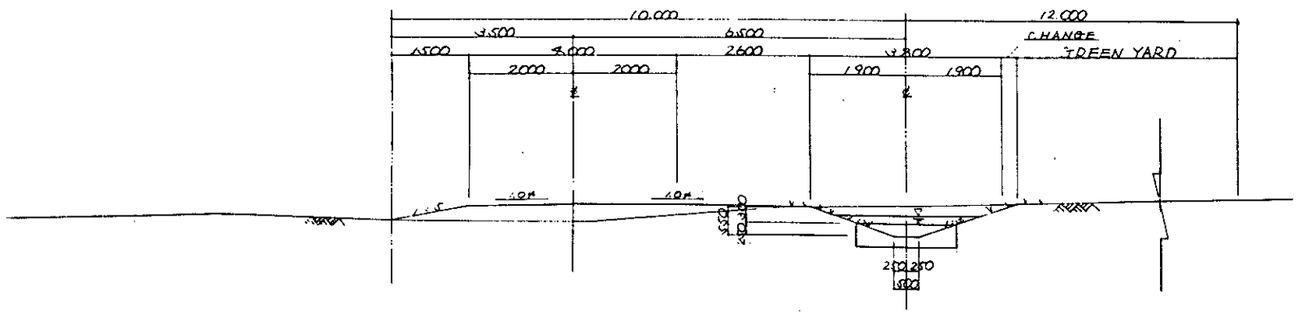

STANDARD SECTION ©-2 TYPE S=1:50

WIRE BOX FOR GABIONADE S=1:30

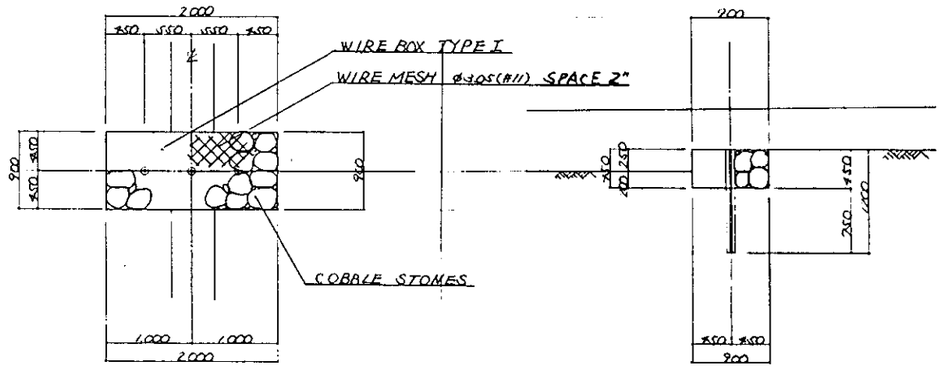

PLAN

B—B SECTION

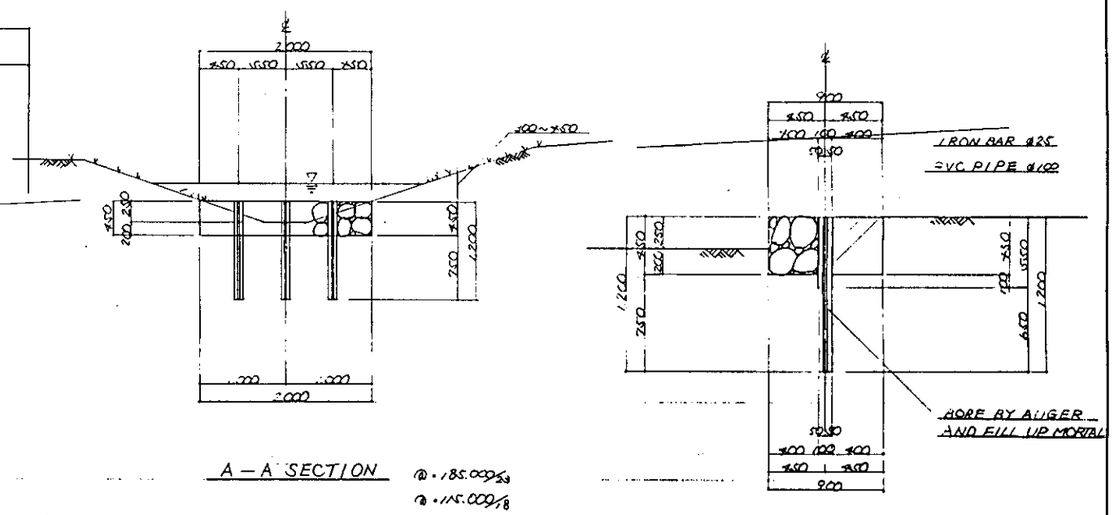

A—A SECTION

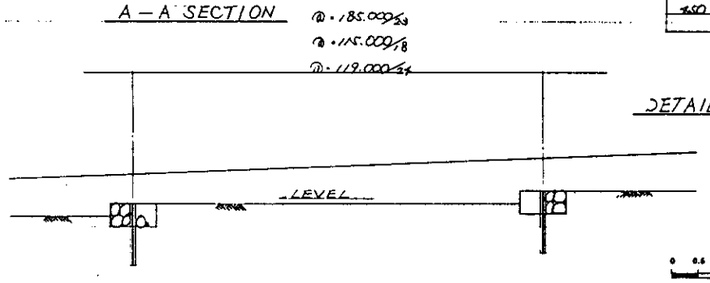

PROFILE S=1:50

DETAILES=1:20

SCALE 1:50

SCALE 1:30

SCALE 1:20

JAPAN INTERNATIONAL COOPERATION AGENCY	
DETAILED DESIGN SURVEY FOR THE AGRICULTURAL DEVELOPMENT RESEARCH PROJECT PHASE II IN NORTHEAST THAILAND	
FARM ROAD © LINE, DRAINAGE CANAL © LINE STANDARD SECTION AND WIRE BOX FOR GABIONADE	
PREPARED BY	DRAWING NO. D-5
CHECKED BY	

Ⓔ LINE

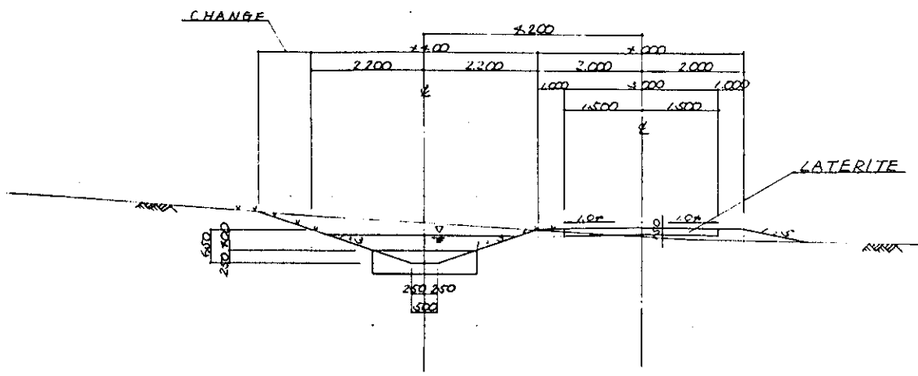

STANDARD SECTION S=1:50

Ⓓ LINE

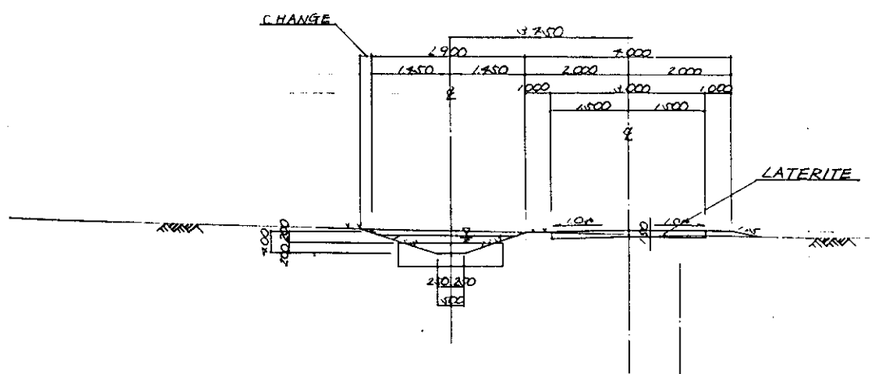

STANDARD SECTION S=1:50

Ⓓ Ⓔ LINE

WIRE BOX FOR GABIONADE S=1:30

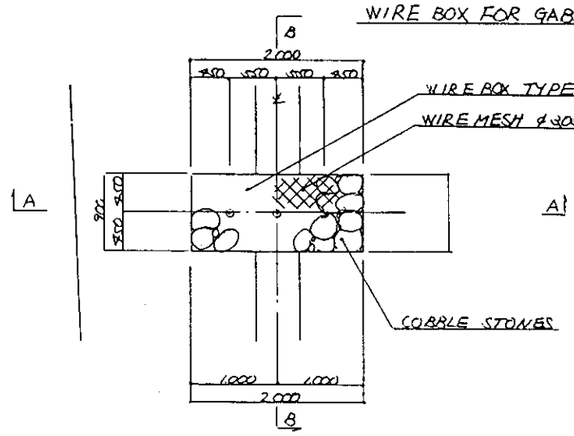

PLAN

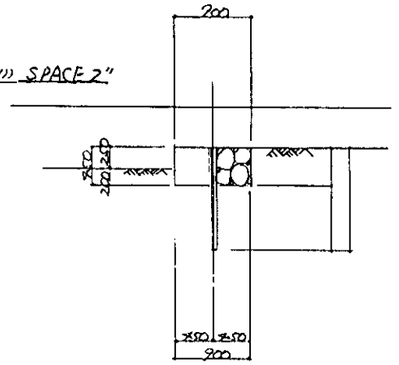

B—B SECTION

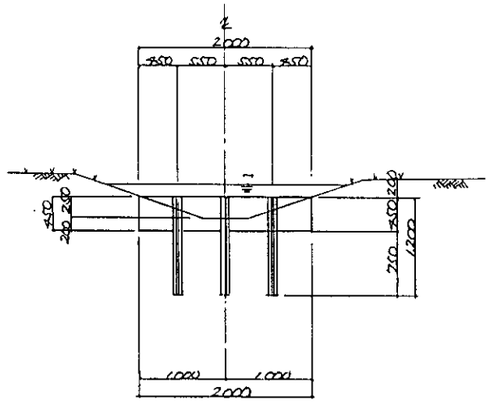

A—A SECTION ⓐ=28.00cm ⓑ=81.00cm ⓒ=96.00cm

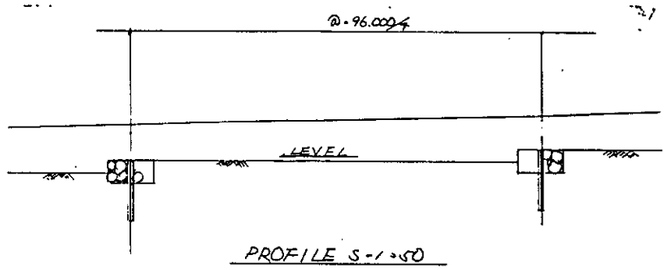

PROFILE S=1:50

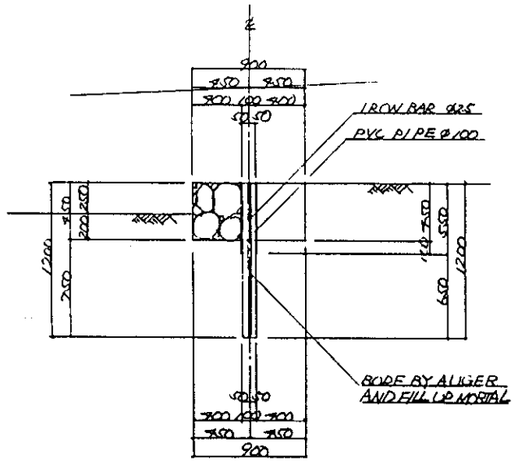

DETAILE S=1:20

SCALE 1:50

SCALE 1:30

SCALE 1:20

JAPAN INTERNATIONAL COOPERATION AGENCY	
DETAILED DESIGN SURVEY FOR THE AGRICULTURAL DEVELOPMENT RESEARCH PROJECT PHASE II IN NORTHEAST THAILAND	
FARM ROAD ⓒⓔ LINE DRAINAGE CANAL ⓓⓔ LINE STANDARD SECTION AND WIRE BOX FOR GABIONADE	
PREPARED BY	DRAWING NO.
CHECKED BY	D-6

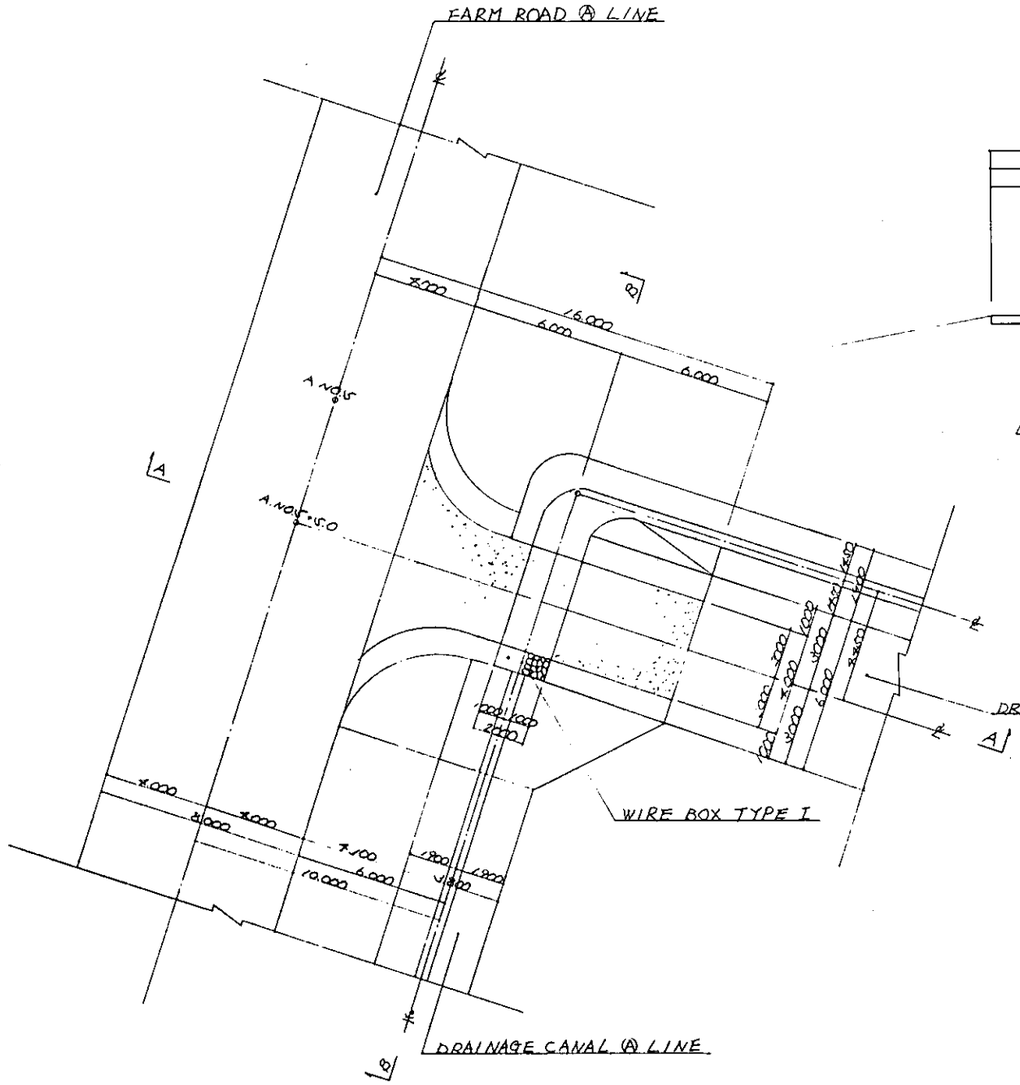

PLAN S=1:100

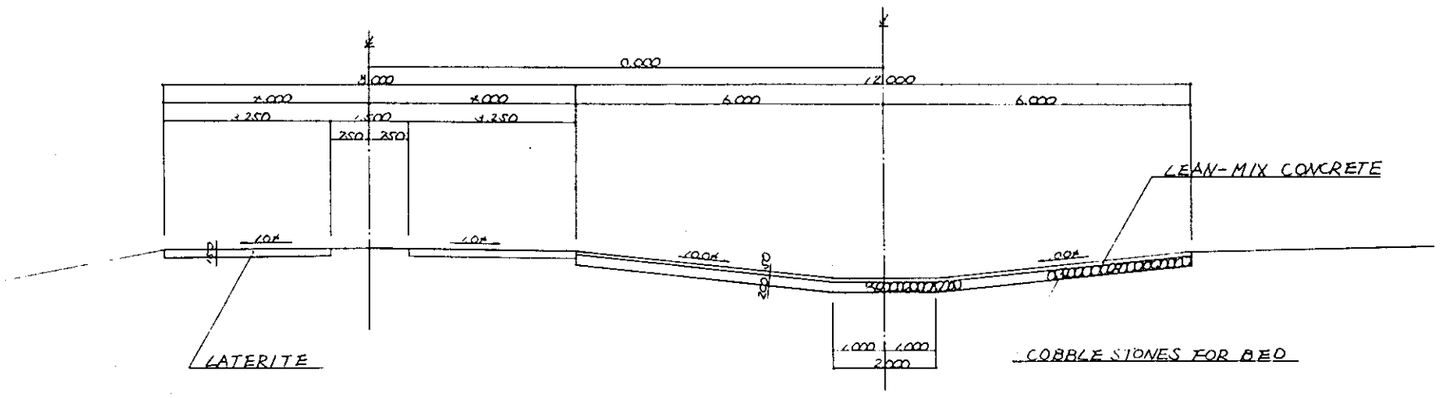

A—A SECTION S=1:50

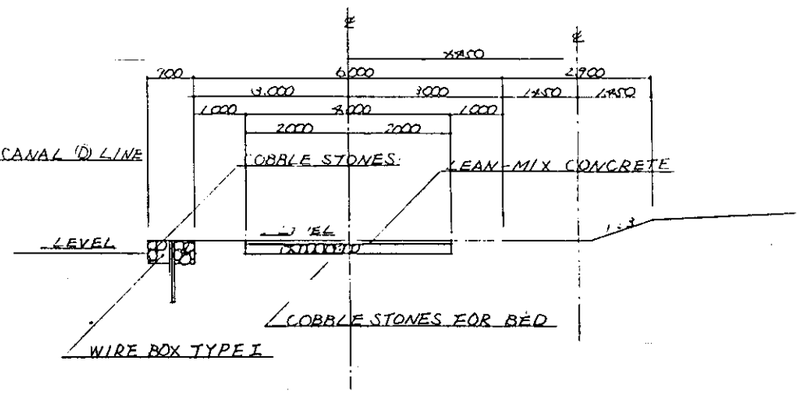

B—B SECTION S=1:50

SCALE 1:100

SCALE 1:50

JAPAN INTERNATIONAL COOPERATION AGENCY	
DETAILED DESIGN SURVEY FOR THE AGRICULTURAL DEVELOPMENT RESEARCH PROJECT PHASE II IN NORTHEAST THAILAND	
CROSSOVER OF CANAL NO.2	
PREPARED BY	DRAWING NO. D-7
CHECKED BY	

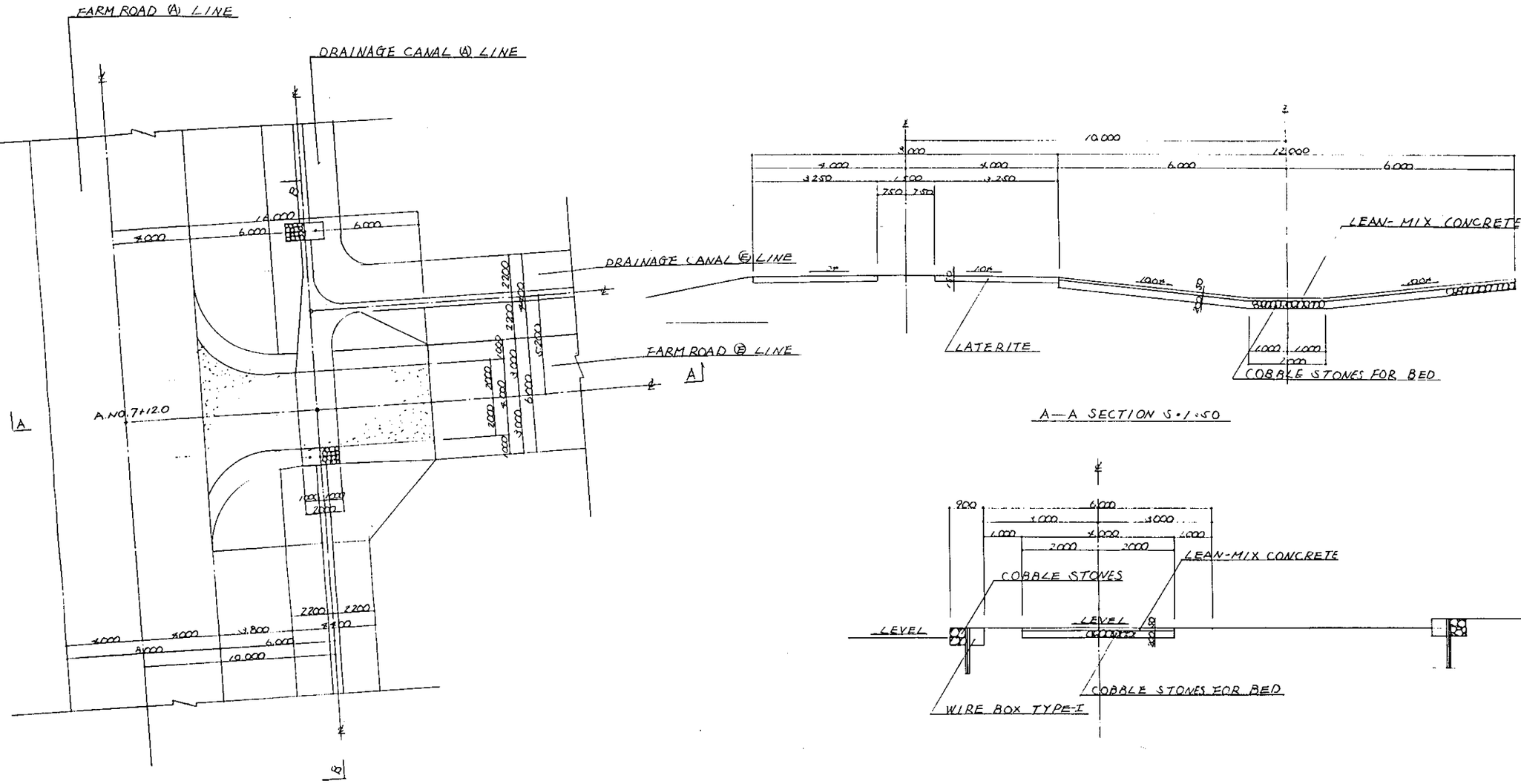

A—A SECTION S=1:50

B—B SECTION S=1:50

SCALE 1:100

SCALE 1:50

JAPAN INTERNATIONAL COOPERATION AGENCY

DETAILED DESIGN SURVEY FOR
THE AGRICULTURAL DEVELOPMENT RESEARCH PROJECT
PHASE II IN NORTHEAST THAILAND

CROSSOVER OF CANAL NO.3

PREPARED BY

CHECKED BY

DRAWING NO. D-8

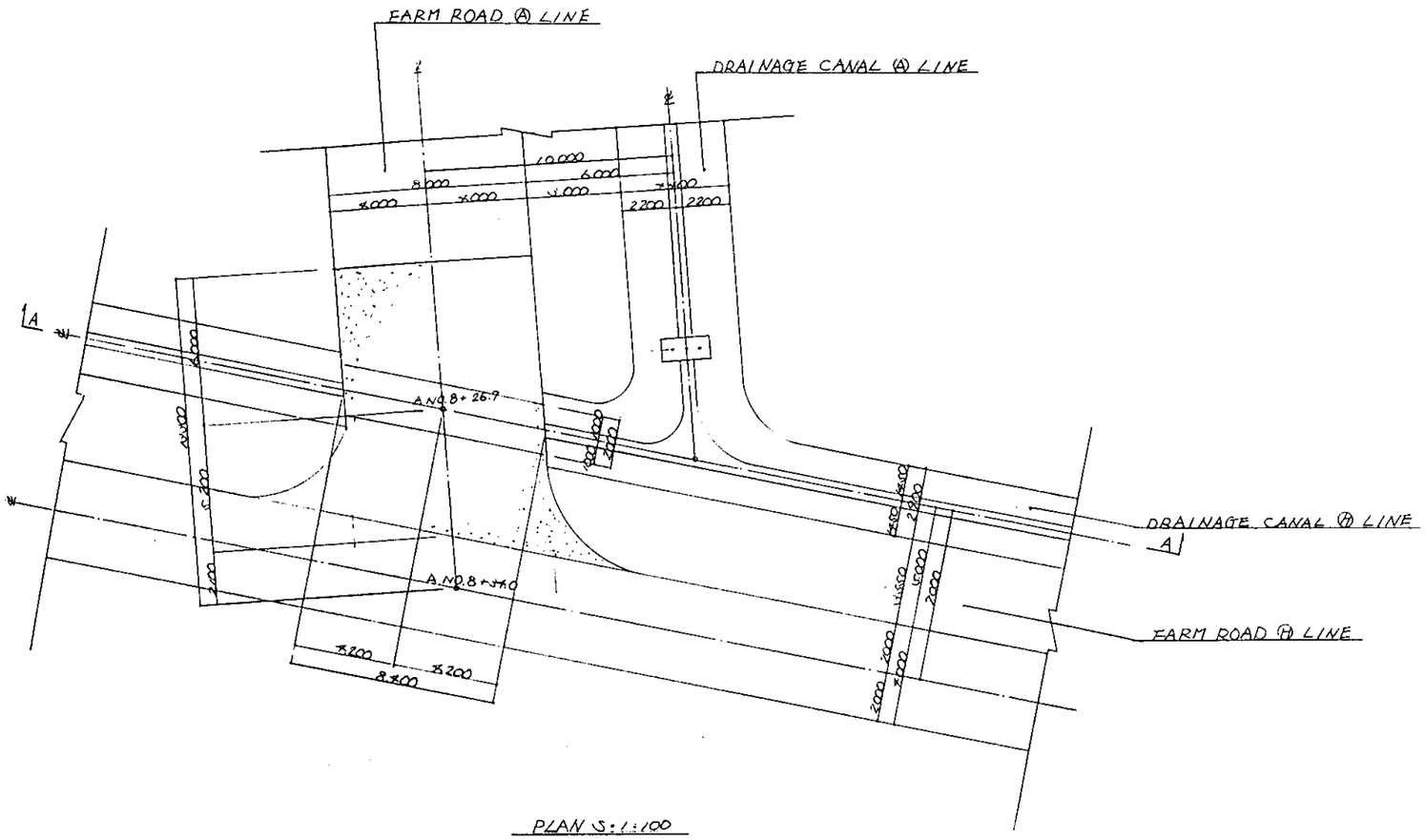
FARM ROAD Ⓐ LINE
DRAINAGE CANAL Ⓐ LINE
10000
6000
8000
4000
4000
4000
2200
2200
A
A
A NO.8+26.9
A NO.8+14.0
8000
4000
4000
2000
2000
2

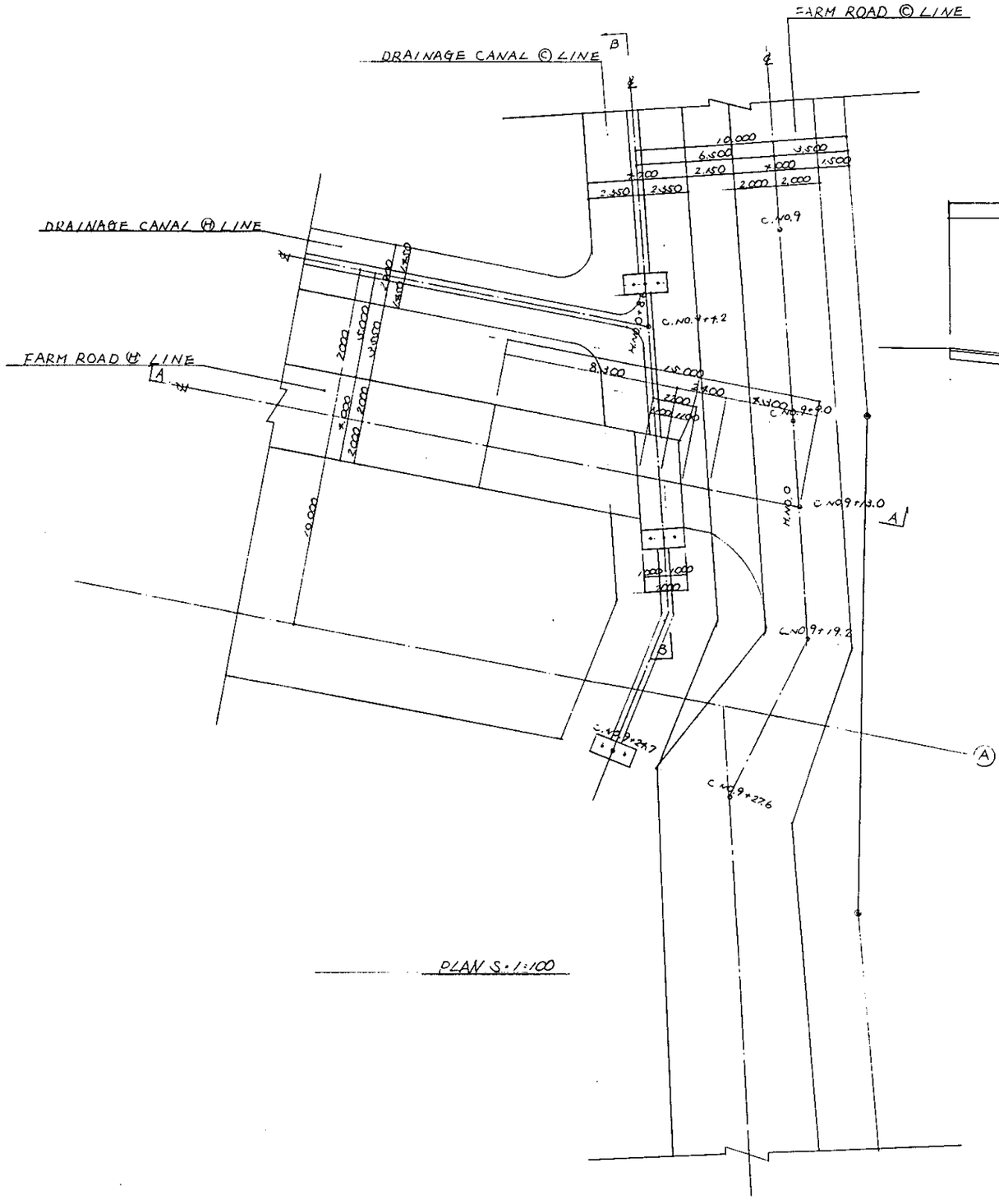
FARM ROAD © LINE
DRAINAGE CANAL © LINE
DRAINAGE CANAL Ⓐ LINE
FARM ROAD Ⓑ LINE
B
A
A
B
Ⓐ
C.No.9
C.No.9+7.2
C.No.9+19.0
C.No.9+19.2
C.No.9+24.7
C.No.9+27.6
10,000
6,500
3,500
1,500
2,000
2,000
2,450
2,450
2,000
2,000
1,000
1,000
2,000
2,000
2

WATER TANK

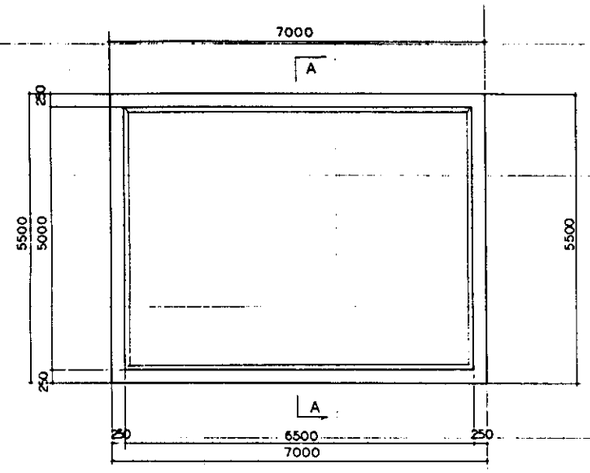

PLANE S=1:50

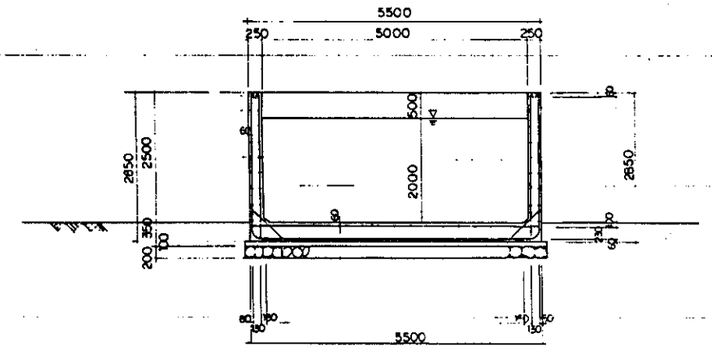

STANDARD SECTION A-A

S = 1:50

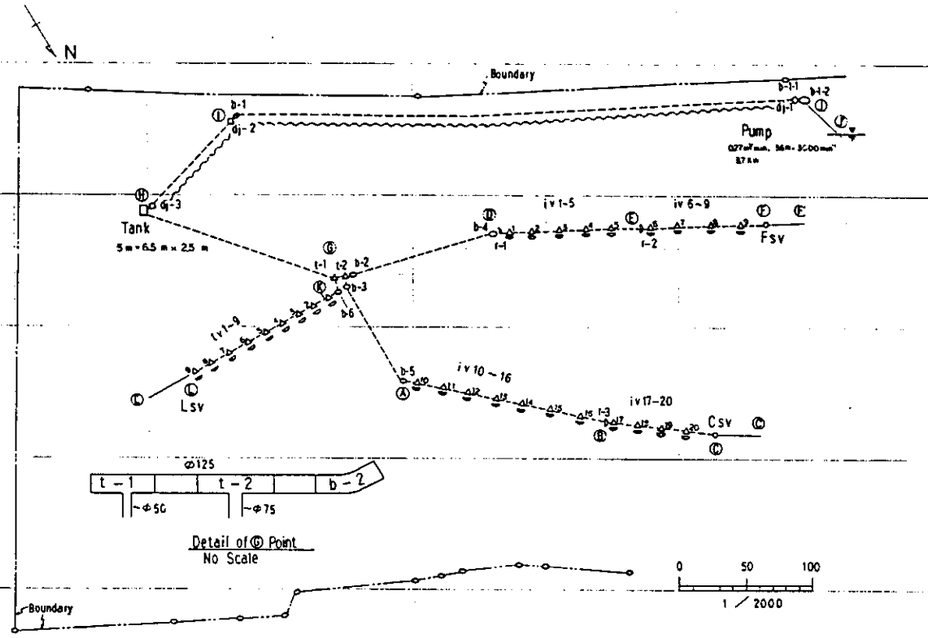

Plan of Pipe Line

Detail of Ⓓ Point
No Scale

Mark	Item	Dimension	Location	Piece Length	Note
---	Steel Pipe	φ80 mm	Ⓖ - Ⓓ	25 m	
			Ⓓ - Ⓐ	430 m	
			Ⓗ - Ⓘ	100 m	
---	PVC Pipe	φ125 mm	Ⓗ - Ⓖ	150 m	
			Ⓖ - Ⓓ	120 m	
		φ100 mm	Ⓓ - Ⓔ	110 m	
			Ⓔ - Ⓕ	90 m	
		φ75 mm	Ⓖ - Ⓐ	90 m	
			Ⓐ - Ⓑ	155 m	
		φ65 mm	Ⓑ - Ⓒ	85 m	
		φ50 mm	Ⓓ - Ⓚ	160 m	
			Ⓚ - Ⓛ		
		φ25 mm	φ50 ~ Valve	10 m	
O	Bend Pipe (steel)	φ80 mm	①②⑦	3 P	t-1 t-2 t-3
	Bend Pipe (PVC)	φ125 mm	Ⓖ	1 P	b-2
		φ100 mm	Ⓓ	1 P	b-4
		φ75 mm	Ⓖ Ⓐ	2 P	b-3,5
		φ50 mm	Ⓚ	1 P	b-6
◇	Dresser joint (steel)	φ80 mm	⑨①Ⓗ	3 P	dj-1,2,3
△	T-type Joint	φ125×50	Ⓖ	1 P	t-1
		φ125×75	Ⓖ	1 P	t-2
		φ50×25	Ⓚ ~ Ⓛ	9 P	iv-1~9
D	Reducer	φ125-100	Ⓓ	1 P	t-1
		φ100-75	Ⓔ	1 P	t-2
		φ75-65	Ⓕ	1 P	t-3
▭	Angle Valve	φ25	Ⓚ ~ Ⓛ	9 P	iv-1~9
		φ80	Ⓓ ~ Ⓔ	5 P	iv-1~5
		φ65	Ⓔ ~ Ⓕ	4 P	iv-6~9
		φ65	Ⓐ ~ Ⓑ	7 P	iv-10~16
		φ50	Ⓑ ~ Ⓒ	4 P	iv-17~20
—	Sand-flush pipe	φ65	Ⓕ - Ⓕ	30 m	
		φ50	Ⓒ ~ Ⓒ	30 m	
		φ50	Ⓛ ~ Ⓟ	30 m	
○	Sand flush valve	φ65	Ⓕ	1 P	Fsv
		φ50	Ⓒ	1 P	Csv
		φ50	Ⓛ	1 P	Lsv
△	T-type Joint	φ100-80	Ⓓ ~ Ⓔ	5 P	iv-1~5
		φ75-65	Ⓕ ~ Ⓕ	4 P	iv-6~9
		φ75-65	Ⓐ ~ Ⓑ	7 P	iv-10~16
		φ65-50	Ⓑ ~ Ⓒ	4 P	iv-17~20

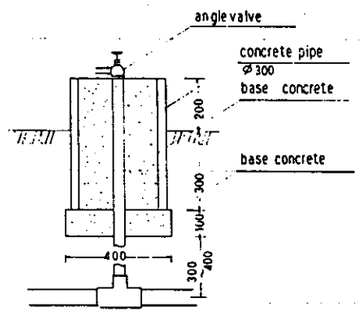

Water Supply Valve S: 1/10

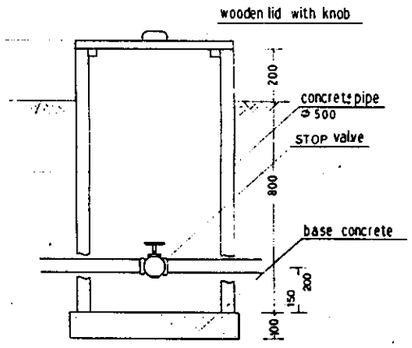

Sand-flash Valve S: 1/10

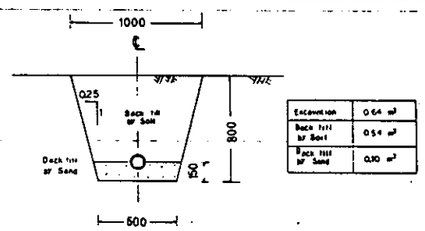

Excavation	0.64 m³
Back fill of Soil	0.54 m³
Back fill of Sand	0.10 m³

Standard Section of Pipe Setting S: 1/20

SCALE 1:2,000

SCALE 1:50

SCALE 1:20

SCALE 1:10

JAPAN INTERNATIONAL COOPERATION AGENCY

DETAILED DESIGN SURVEY FOR THE AGRICULTURAL DEVELOPMENT RESEARCH PROJECT PHASE II IN NORTHEAST THAILAND

WATER TANK, PLAN OF PIPELINE AND STANDARD SECTION OF PIPE SETTING

PREPARED BY

CHECKED BY

DRAWING NO. D-11

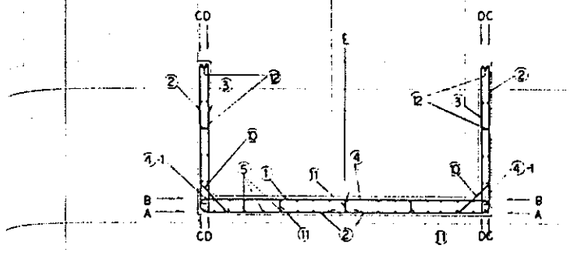

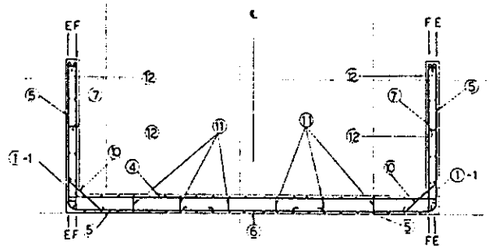

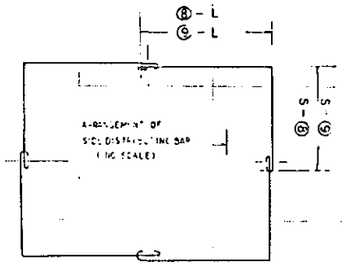

PLAN OF WATER TANK (1)

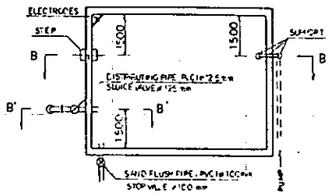

PLAN SCALE 1:20

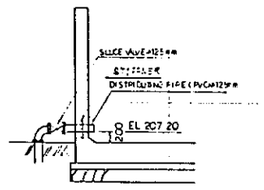

SECTION B-B Scale 1:50

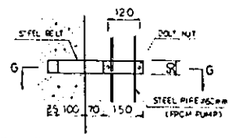

SUPPORT Scale 1:10

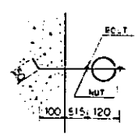

SECTION G-G Scale 1:10

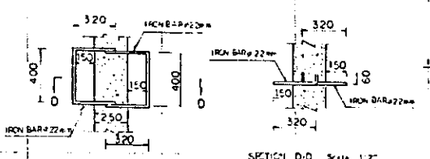

SECTION C-C Scale 1:20

SECTION D-D Scale 1:20

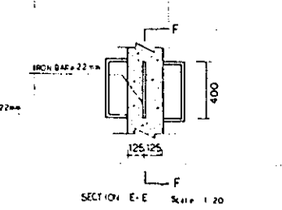

SECTION E-E Scale 1:20

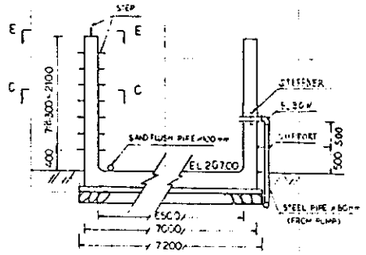

SECTION B-B Scale 1:50

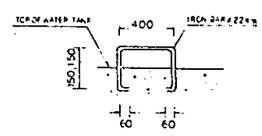

SECTION F-F Scale 1:20

PLAN OF WATER TANK (2)

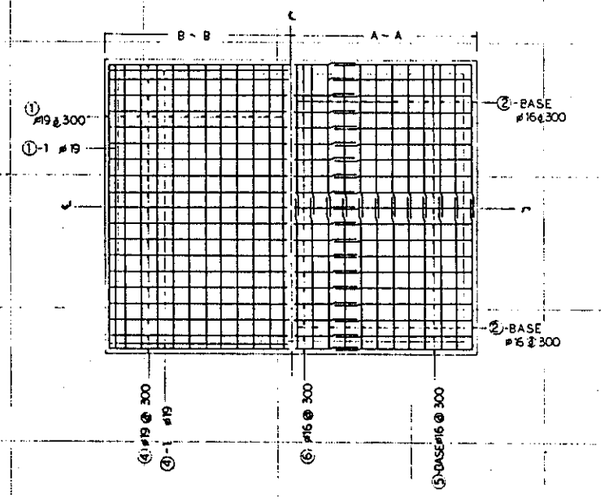

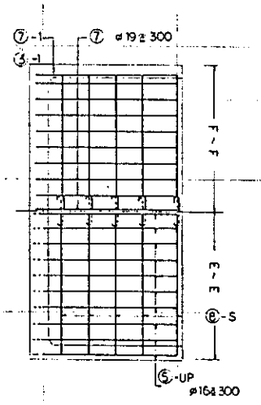

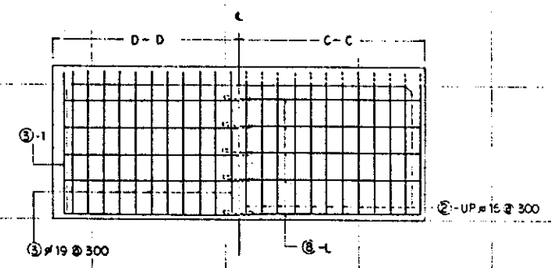

ARRANGEMENT OF IRON BAR

Scale 1:50

LIST OF IRON BAR

No.	ø	Kg/m	ℓ	Kg/pc	PC	Weight (kg)	Remark
1	19	2.23	5,700	12.711	24	305 064	
1-1	"	"	"	"	2	25 422	
2	16	1.58	5,930	9.38	46	426 240	
3	19	2.23	3,850	8.5855	44	299 366	
3-1	"	"	"	"	4	27 206	
4	"	"	7,270	16.2121	19	308 030	
4-1	"	"	"	"	2	32 424	
5	16	1.58	5,340	8.4372	38	320 614	
6	"	"	2,830	4.4714	19	84 957	
7	19	2.23	3,850	8.5855	34	291 251	
8	13	1.04	6,960	7.2384	20	144 768	
9	"	"	6,700	6.968	20	139 360	
10	"	"	1,100	1.144	68	77 792	
11	"	"	700	0.728	18	13 104	
12	"	"	600	0.624	36	22 464	
Total						2,457 962	

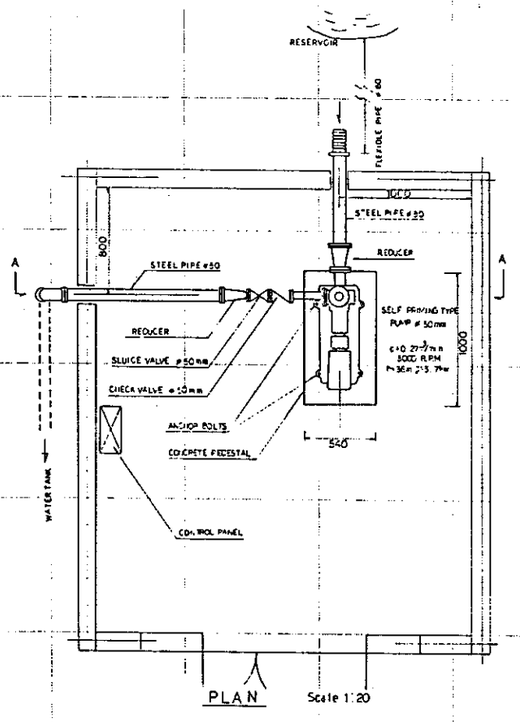

PLAN Scale 1:20

PIPE ARRANGEMENT IN PUMP HOUSE (1)

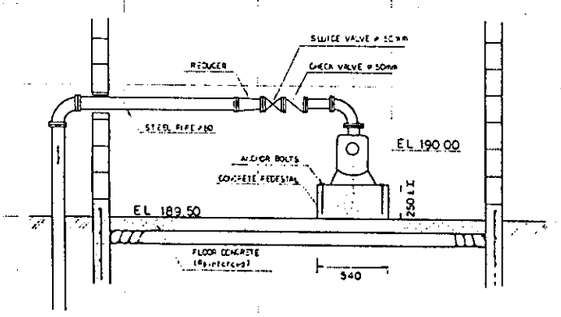

SECTION A-A Scale 1:20

PIPE ARRANGEMENT IN PUMP HOUSE (2)

SCALE 1:2,000

0 20 40 60 80 100 200 (m)

SCALE 1:50

0 0.5 1 2 3 4 5 (m)

SCALE 1:20

0 0.2 0.4 0.6 0.8 1.0 2.0 (m)

SCALE 1:10

0 0.1 0.2 0.3 0.4 0.5 1.0 (m)

JAPAN INTERNATIONAL COOPERATION AGENCY

DETAILED DESIGN SURVEY FOR
THE AGRICULTURAL DEVELOPMENT RESEARCH PROJECT
PHASE II IN NORTHEAST THAILAND

DETAILE OF WATER TANK & PUMP HOUSE ARRANGEMENT OF IRON BAR

PREPARED BY

CHECKED BY

DRAWING NO. D-12

INTERIOR FINISH SCHEDULE

BUILDING NAME	ROOM NAME	FLOOR		BASE BOARD(WAINSCOT)		WALL		CEILING		REMARKS
		SUB FLOOR	FINISH	BASE	FINISH	BASE	FINISH	BASE	FINISH	
FIELD LABORATORY	LABOLATORY (1)		CONCRETE STEEL TROWEL		WOOD	PLYWOOD	CLEAR LACQUER	PLYWOOD	CLEAR LACQUER	
	LABOLATORY (2)		CONCRETE STEEL TROWEL		WOOD	PLYWOOD	CLEAR LACQUER	PLYWOOD	CLEAR LACQUER	
	EQUIPMENT ROOM		CONCRETE STEEL TROWEL		WOOD	PLYWOOD	CLEAR LACQUER	PLYWOOD	CLEAR LACQUER	
	PANTRY		CONCRETE STEEL TROWEL		WOOD	MORTAL STEEL TROWEL	EMULSION PAINT (ACRYLIC)	ASBESTOS CEMENT BOARD	EMULSION PAINT (ACRYLIC)	
	WATER CLOSET		CONCRETE STEEL TROWEL		MORTAL STEEL TROWEL	PLYWOOD	CLEAR LACQUER	PLYWOOD	CLEAR LACQUER	
	STORAGE		CONCRETE STEEL TROWEL				CAVITY CONCRETE BLOCK FINISHING			
SURVEY AND STORAGE HOUSE	PRELIMINARY SURVEY ROOM		CONCRETE STEEL TROWEL		CONCRETE STEEL TROWEL		CAVITY CONCRETE BLOCK FINISHING			
	FERTILIZER AND CHEMICAL STORAGE		CONCRETE STEEL TROWEL		CONCRETE STEEL TROWEL		CAVITY CONCRETE BLOCK FINISHING			
	PRODUCTS STORAGE		CONCRETE STEEL TROWEL		CONCRETE STEEL TROWEL		CAVITY CONCRETE BLOCK FINISHING			
	WATER CLOSET		CONCRETE STEEL TROWEL		CONCRETE STEEL TROWEL		CAVITY CONCRETE BLOCK FINISHING			
PUMP STATION			CONCRETE STEEL TROWEL				CAVITY CONCRETE BLOCK FINISHING			
MACHINERY STORE-HOUSE			CONCRETE STEEL TROWEL							
DRY YARD			CONCRETE STEEL TROWEL							

EXTERIOR FINISH SCHEDULE

FIELD LABORATORY	ROOF	TILED ROOF
SURVEY AND STORAGE HOUSE	EXTERIOR WALL	CONCRETE ACRYLIC LITHING SPRAYING
PUMP STATION	WINDOWS, DOORS	WOODEN.
MACHINERY STORE-HOUSE		

ELECTRICAL INSTALLATION

FIELD LABORATORY	FLUORESCENT LAMP 40W-2×18. RECEPTACLE×7
SURVEY AND STORAGE HOUSE	FLUORESCENT LAMP 40W-2×14. RECEPTACLE×4
PUMP STATION	FLUORESCENT LAMP 40W-2×1. RECEPTACLE×1
MACHINERY STORE-HOUSE	FLUORESCENT LAMP 40W-2×1. RECEPTACLE×1

PLUMBING INSTALLATION

FIELD LABORATORY	WATER CLOSET×2. WASH BASIN×2
SURVEY AND STORAGE HOUSE	WATER CLOSET×2. WASH BASIN×3

JAPAN INTERNATIONAL COOPERATION AGENCY

DETAILED DESIGN SURVEY FOR THE AGRICULTURAL DEVELOPMENT RESEARCH PROJECT PHASE II IN NORTHEAST THAILAND

INTERIOR, EXTERIOR FINISH SCHEDULE ELECTRICAL, PLUMBING INSTALLATION

PREPARED BY

CHECKED BY

DRAWING NO. D-13

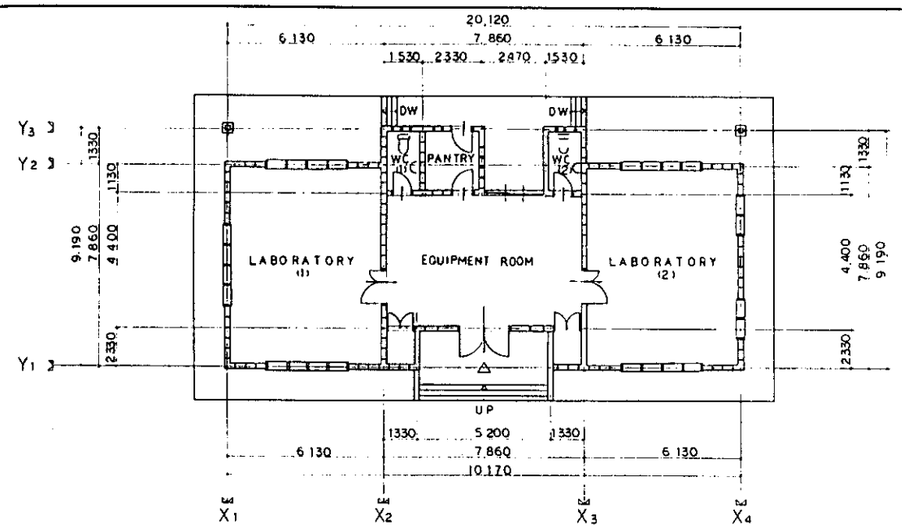

PLAN S・1:100

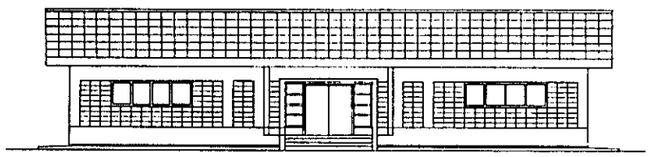

SOUTH ELEVATION S・1:100

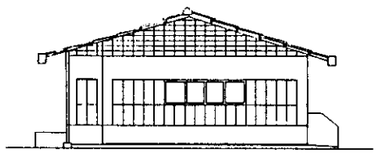

WEST ELEVATION S・1:100

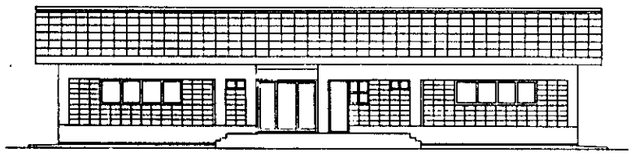

NORTH ELEVATION S・1:100

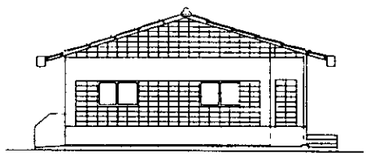

EAST ELEVATION S・1:100

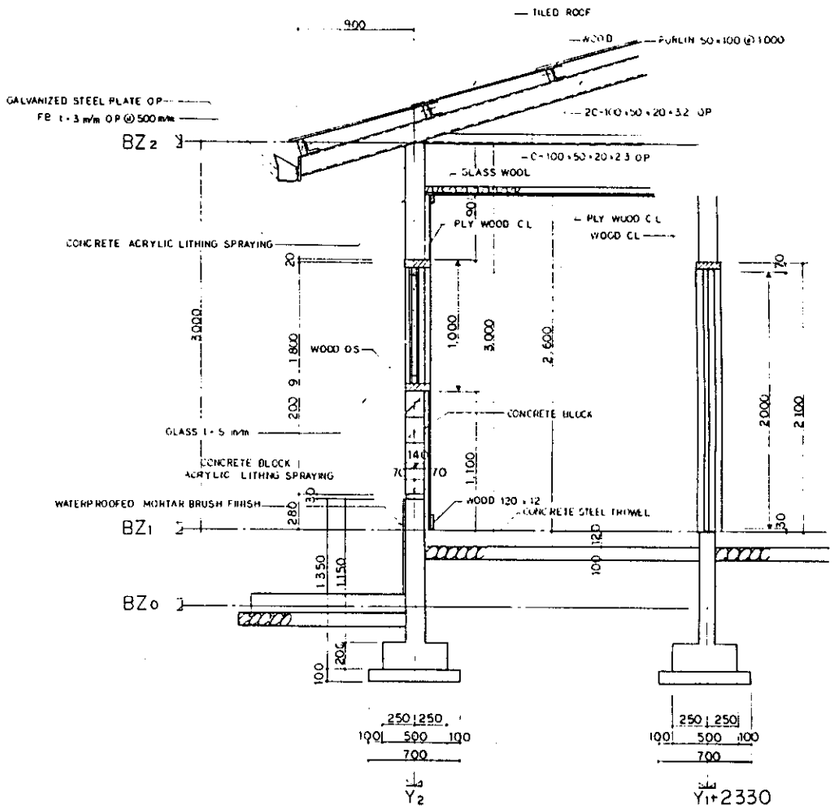

SECTION DETAIL S・1:20

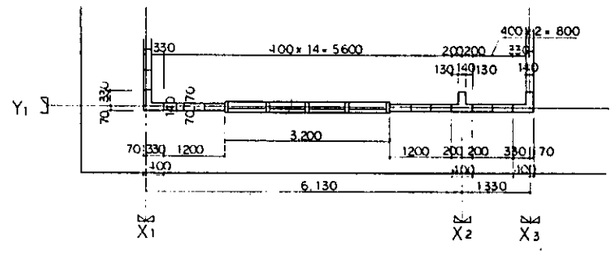

DETAIL PLAN S・1:50

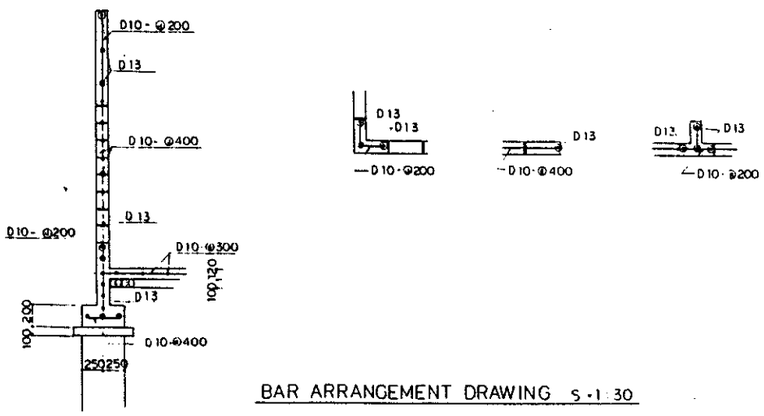

BAR ARRANGEMENT DRAWING S・1:30

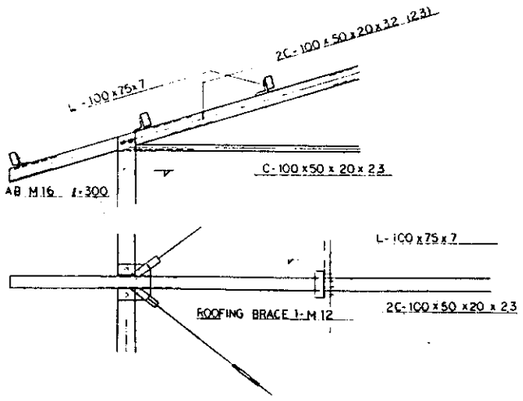

ROOF CONSTRUCTION DETAIL S・1:20

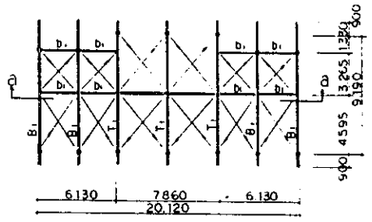

ROOF CONSTRUCTION PLAN S・1:200

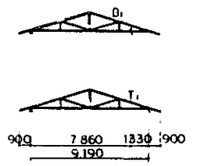

ROOF TRUSS S・1:200

NOTE)

T1	TOP CHOP	2LGC - 100×50×20×3.2 (23)	
	BOTTOM CHORD	LGC - 100×50×20×2.3	EW
	ANGLE WEB	LGC - 100×50×20×2.3	EW

D1 LGC - 100×50×20×2.3 2-M16 (BOLT) R・4.5
B1 LGC - 100×50×20×2.3
T LGC - 100×50×20×2.3 1-M16 (BOLT) R・4.5
ROOFING BRACE 1-M12 (TURN BUCKLE) 2-M6 (BOLT) R・4.5

JAPAN INTERNATIONAL COOPERATION AGENCY

DETAILED DESIGN SURVEY FOR
THE AGRICULTURAL DEVELOPMENT RESEARCH PROJECT
PHASE II IN NORTHEAST THAILAND

FIELD LABORATORY

PREPARED BY	DRAWING NO.
CHECKED BY	D-14

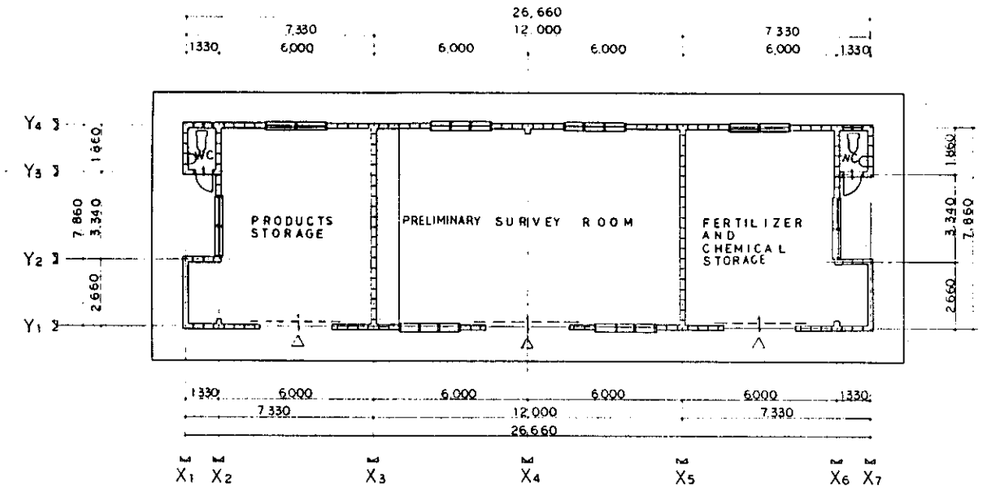

PLAN S=1:100

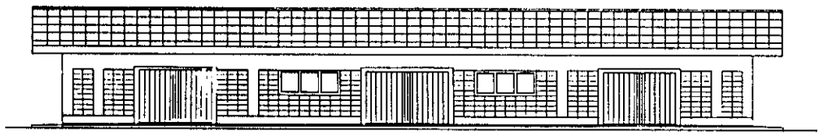

SOUTH ELEVATION S=1:100



EAST ELEVATION S=1:100

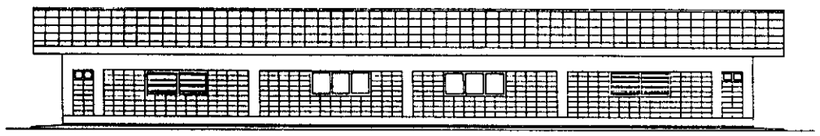

NORTH ELEVATION S=1:100

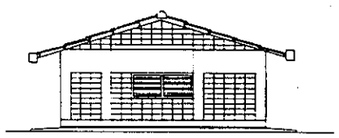

WEST ELEVATION S=1:100

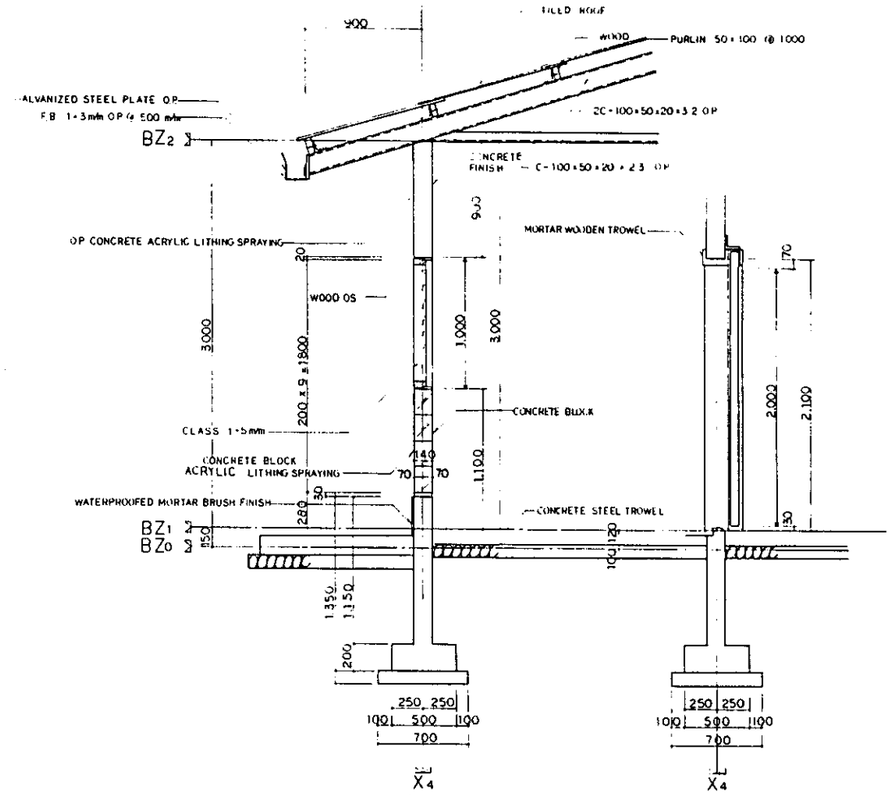

SECTION DETAIL S=1:20

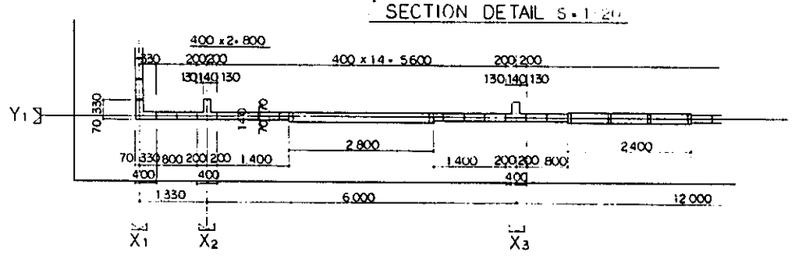

DETAIL PLAN S=1:50

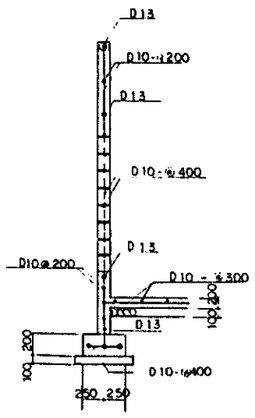

BAR ARRANGEMENT DRAWING S=1:30

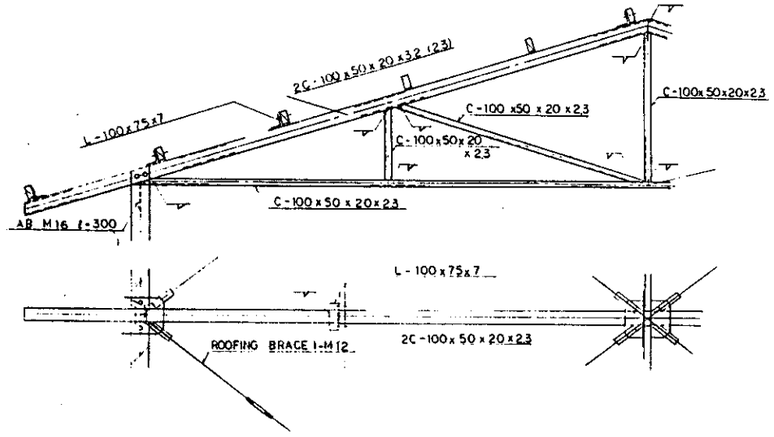

ROOF CONSTRUCTION DETAIL S=1:20

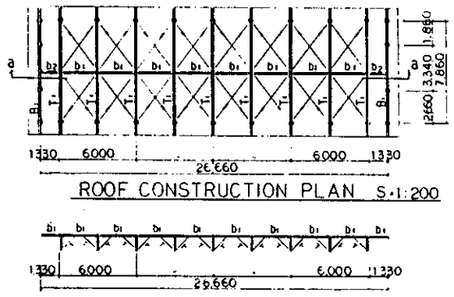

ROOF CONSTRUCTION PLAN S=1:200

8-8 SECTION S=1:200

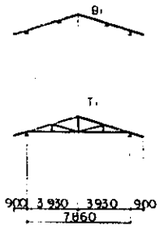

ROOF TRUSS S=1:200

(NOTE)

T1 { TOP CHOD 2LGC-100×50×20×3.2
BOTTOM CHORD LGC-100×50×20×2.3 EW
ANGLE WEB LGC-100×50×20×2.3 EW

D1 D2 LGC 100×50×20×2.3 2-M16 (BOLT) R=45
B1 2LGC 100×50×20×2.3
T LGC 100×50×20×2.3 1-M16 (BOLT R=45
ROOFING BRACE 1-M12 (TURN BUCKLE) 1-M16 (BOLT) R=45

JAPAN INTERNATIONAL COOPERATION AGENCY

DETAILED DESIGN SURVEY FOR THE AGRICULTURAL DEVELOPMENT RESEARCH PROJECT PHASE II IN NORTHEAST THAILAND

SURVEY AND STORAGE HOUSE

PREPARED BY	DRAWING NO.
CHECKED BY	D-15

PUMP STATION

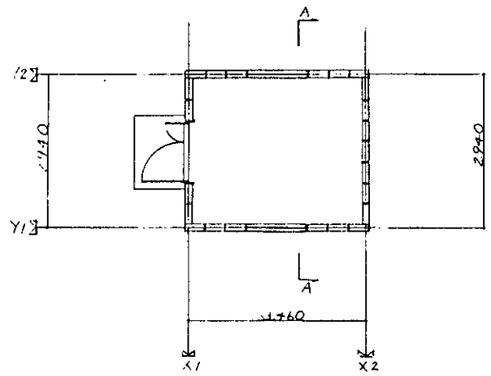

PLAN S=1:50

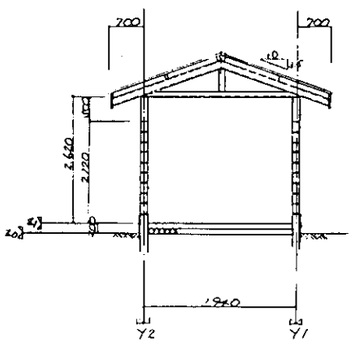

A-A SECTION S=1:50



SOUTH

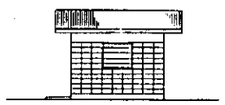

EAST

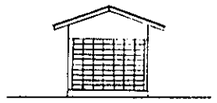

NORTH

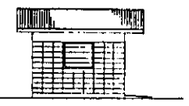

WEST

ELEVATION S=1:100

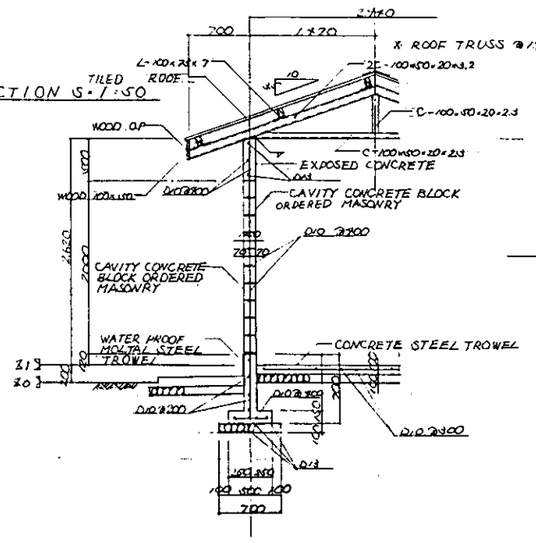

DETAIL S=1:10

MACHINERY STORE-HOUSE

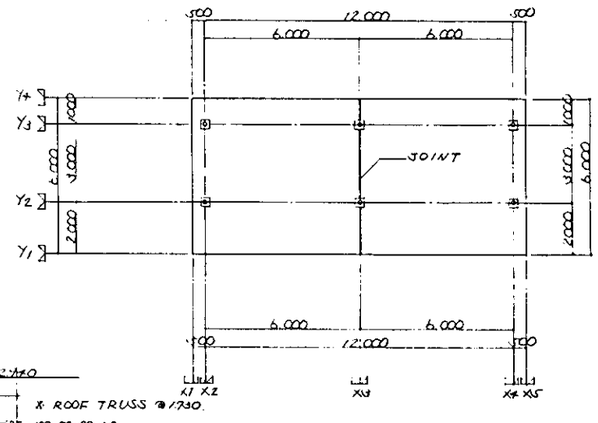

PLAN S=1:100

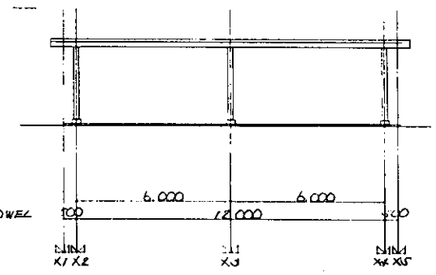

NORTH ELEVATION S=1:100

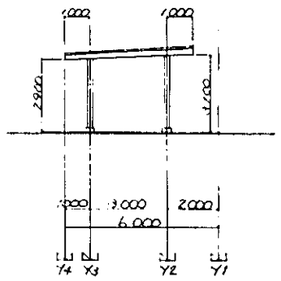

EAST ELEVATION S=1:100

DRY YARD

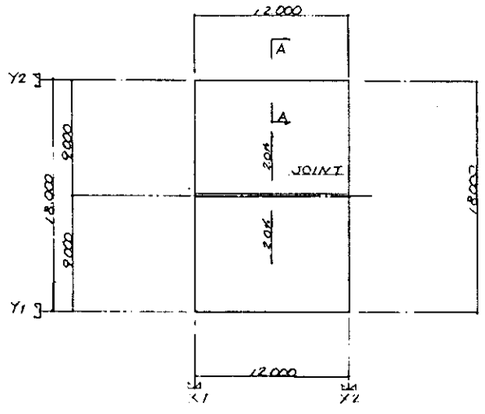

PLAN S=1:100

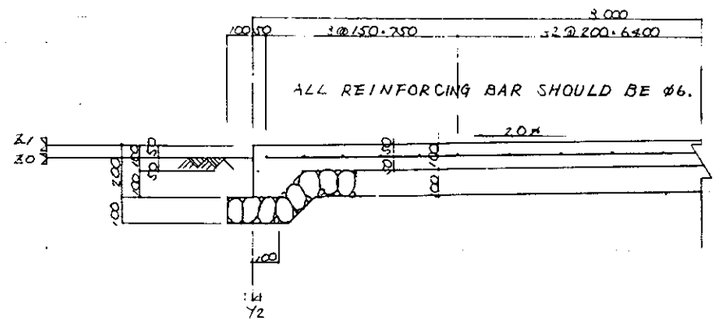

A-A SECTION S=1:10

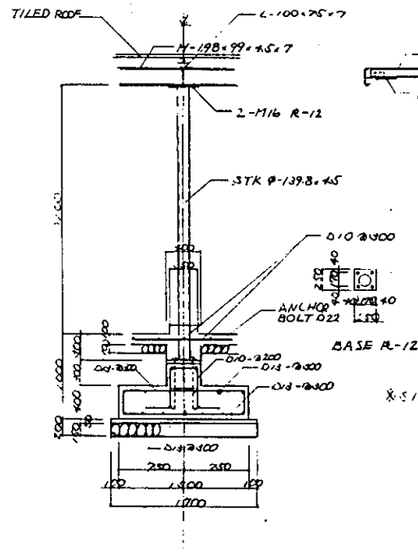

DETAIL S=1:30

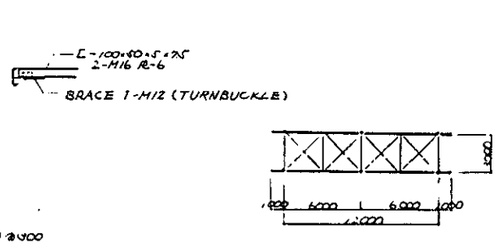

ROOF CONSTRUCTION PLAN
S=1:200

※SIMPLE COLUMN FOOTING
COLUMN (400x400)
FOOTING (1500x1500)

JAPAN INTERNATIONAL COOPERATION AGENCY

DETAILED DESIGN SURVEY FOR
THE AGRICULTURAL DEVELOPMENT RESEARCH PROJECT
PHASE II IN NORTHEAST THAILAND

MACHINERY STORE-HOUSE,
PUMP STATION
AND DRY YARD

PREPARED BY	DRAWING NO.
CHECKED BY	D-16

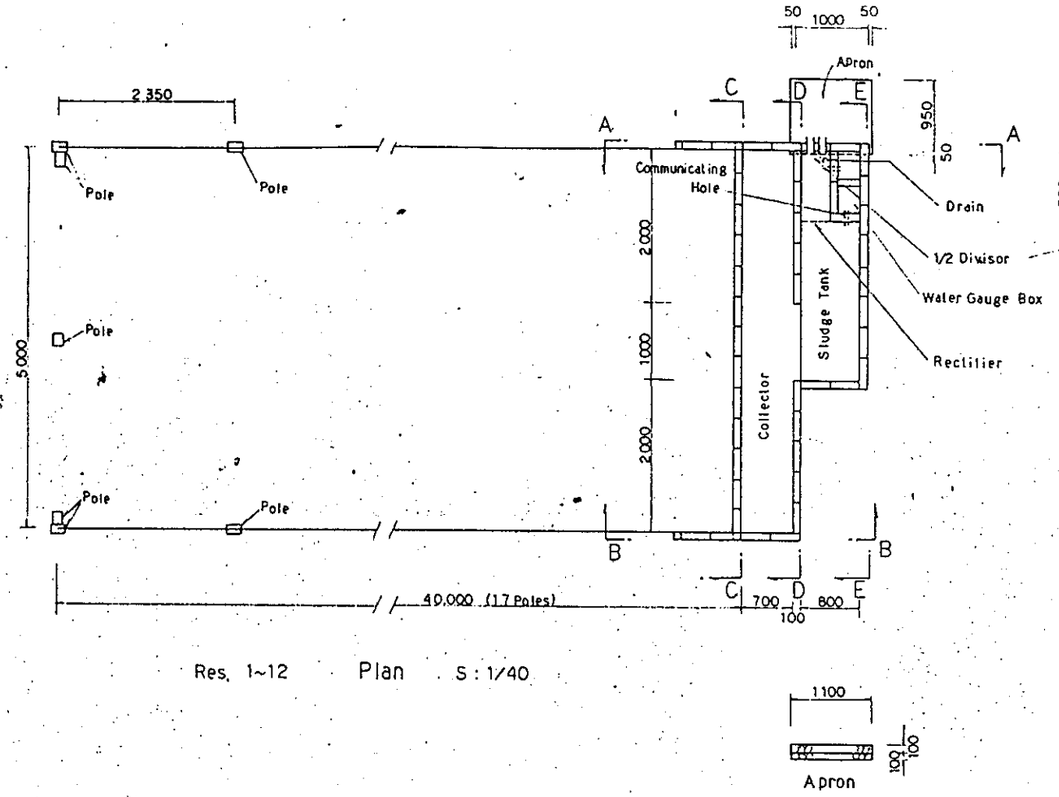

Res. 1~12 Plan S : 1/40

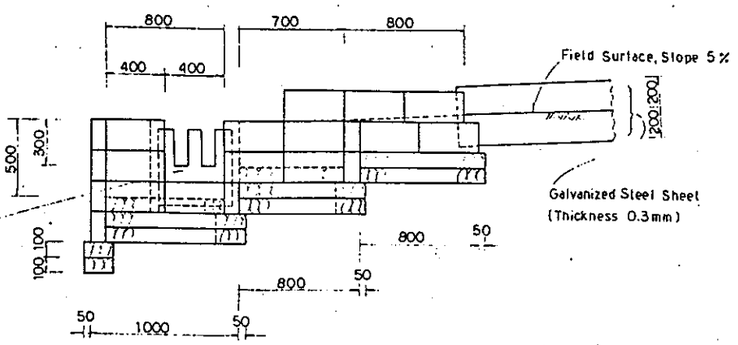

Res. 1~12 A~A Section S : 1/20

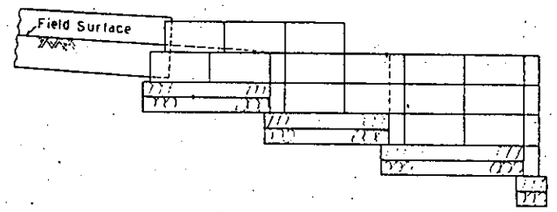

Res. 1~12 B~B Section S : 1/20

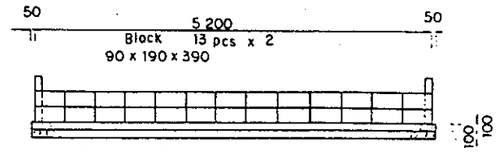

Res. 1~12
Demo. 13~18 C~C Section S : 1/40

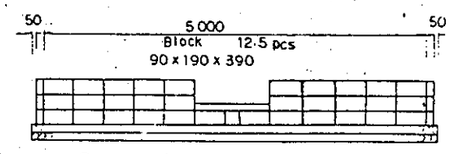

Res. 1~12
Demo. 13~18 D~D Section S : 1/40

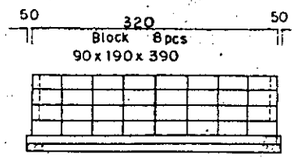

Res 1~12
Demo 13~18 E~E Section S:1/40

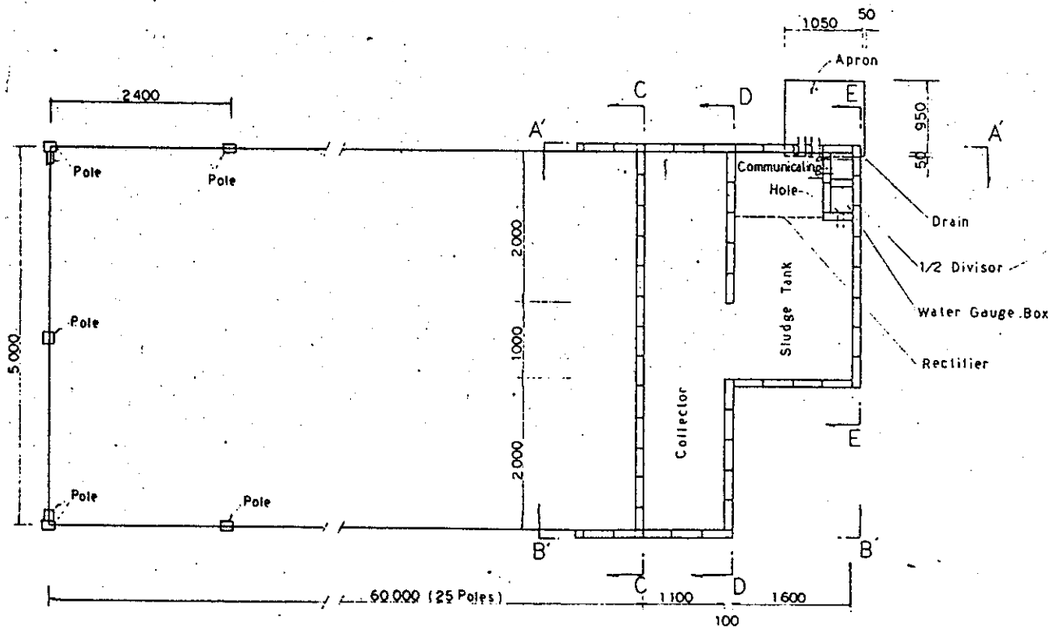

Demo. 13~18 Plan S : 1/40

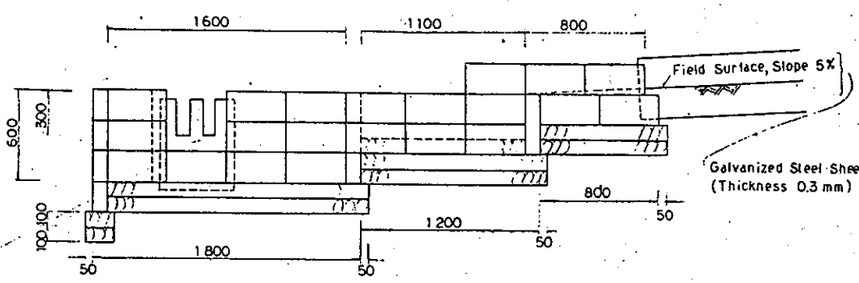

Demo. 13~18 A'~A' Section S : 1/20

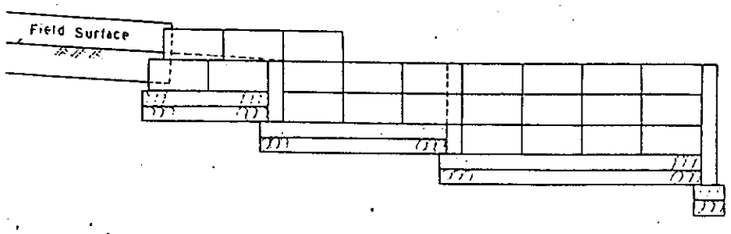

Demo. 13~18 B'~B' Section S : 1/20

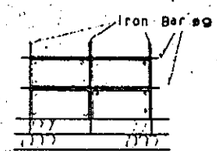

S : 1/20

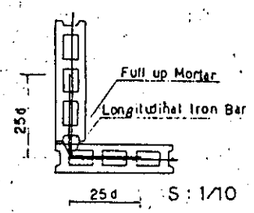

S : 1/10

Placing of Iron Bar

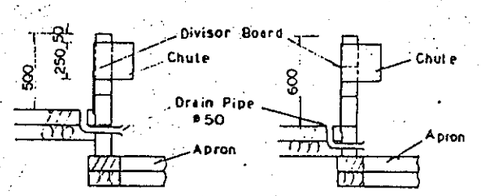

Res. 1~12 Demo. 13~18

Drain at Sludge Tank S : 1/20

JAPAN INTERNATIONAL COOPERATION AGENCY

DETAILED DESIGN SURVEY FOR
THE AGRICULTURAL DEVELOPMENT RESEARCH PROJECT
PHASE II IN NORTHEAST THAILAND

RUN-OFF PLOT (1)
PLAN, SECTION, MASONRY

PREPARED BY	DRAWING No.
CHECKED BY	D-17

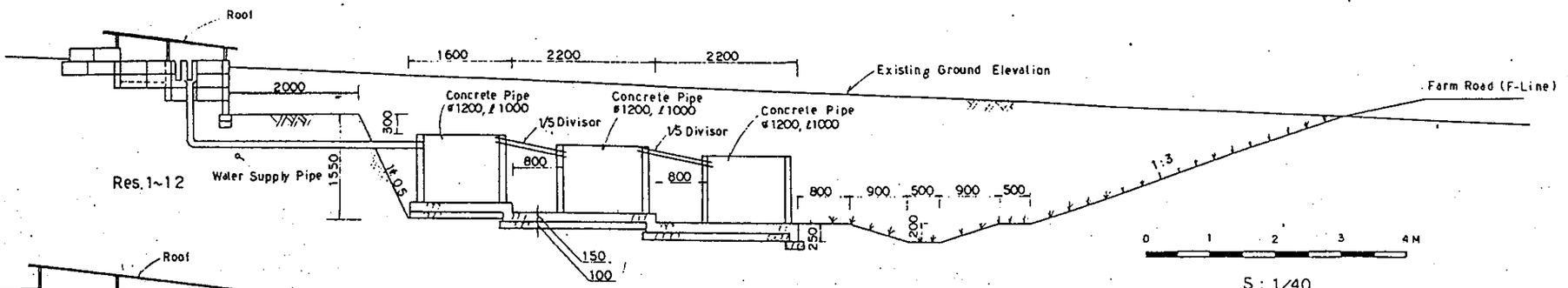

Standard Profile of Aliquot Tank and Drainage Canal S : 1/40

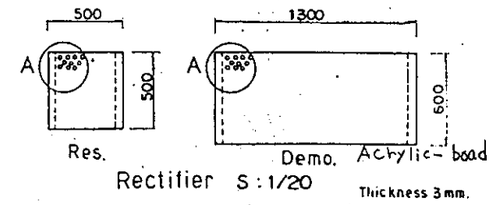

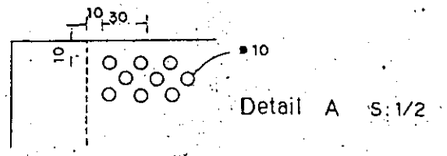

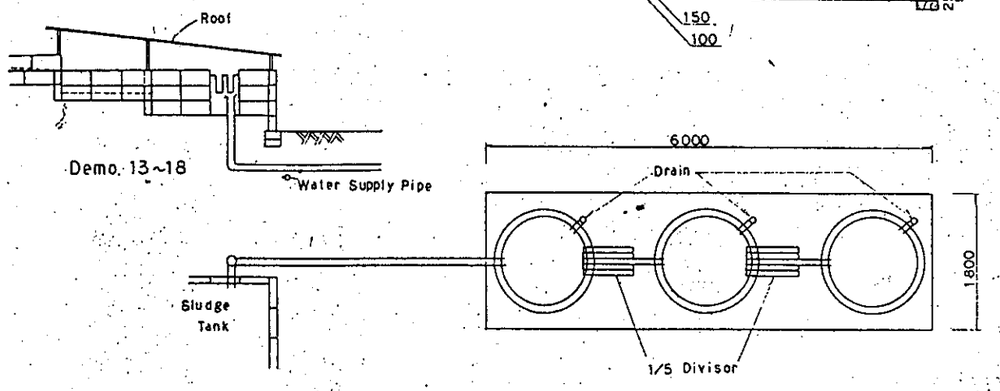

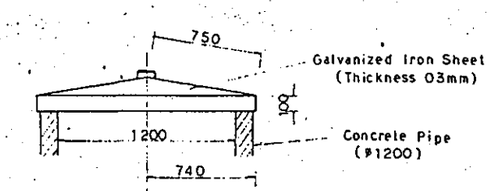

Cover of Aliquot Tank S: 1/20

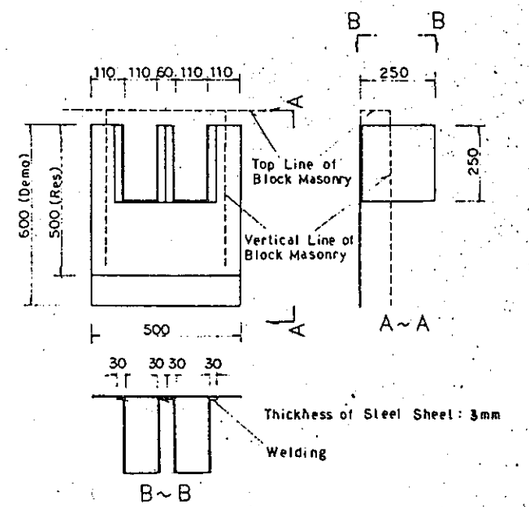

1/2 Divisor, Chute S: 1/10

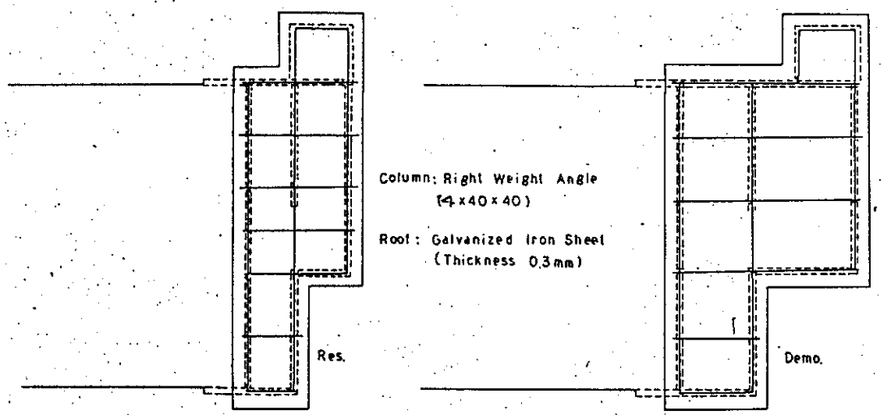

Rooting for Collector and Sludge Tank S:1/50

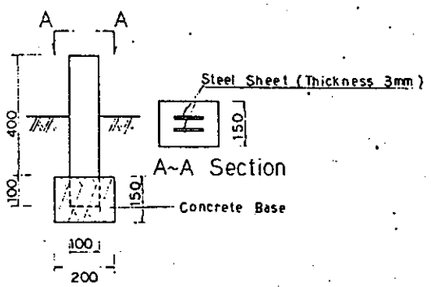

Pole for Frame S:1/10

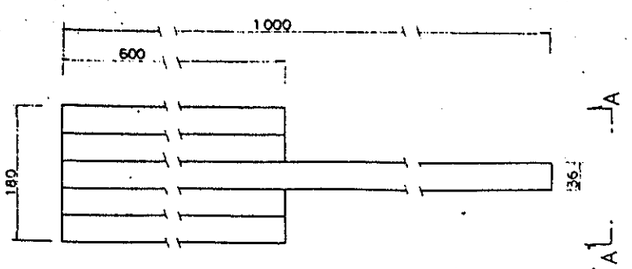

1/5 Divisor (Galvanized Iron Sheet, Thickness 0.3mm)

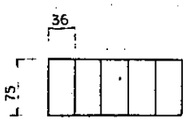

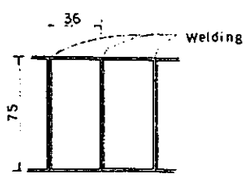

Detail S:1/20

JAPAN INTERNATIONAL COOPERATION AGENCY	
DETAILED DESIGN SURVEY FOR THE AGRICULTDRAL DEVELOPMENT RESEARCH PROJECT PHASE II IN NORTHEAST THAILAND	
RUN-OFF PLOT (2) PROFILE, ROOFING, COVER, POLE, DIVISOR, RECTIFIER	
PREPARED BY	DRAWING NO. D-18
CHECKED BY	