PRESTRESSED CONCRETE BRIDGE COMPUTATION
CHANNEL MEDAN FLOOD WAY
Br – Mf 1
Station : Fw 06 + 90

span
31.00

III FOUNDATION

Pile for Abutment

- III.1 Charateristic of pile
  - III.1.1 Normal condition
  - III.1.2 Earthquake condition
- III.2 Axial bearing load allowance for a pile
- III.3 Spring constant of a pile
  - III.3.1 Normal condition
  - III.3.2 Earthquake condition
- III.4 Displacement of a head pile
  - III.4.1 Normal condition
  - III.4.2 Earthquake condition
- III.5 Coeficient displacement of footing
  - III.5.1 Case – I,Normal condition (HWL)
  - III.5.2 Case – II,Normal condition (LWL)
  - III.5.3 Case – III,Earthquake condition (HWL)
  - III.5.4 Case – IV,Earthquake condition (LWL)
- III.6 Forces at the i–th pile head
  - III.6.1 Case – I,Normal condition (HWL)
  - III.6.2 Case – II,Normal condition (LWL)
  - III.6.3 Case – III,Earthquake condition (HWL)
  - III.6.4 Case – IV,Earthquake condition (LWL)
- III.7 Control stresses on a head pile
  - III.7.1 Normal condition
  - III.7.2 Earthquake condition
- III.8 Combined load at Abutment section
  - III.8.1 Case – I,Normal condition (HWL)
  - III.8.2 Case – II,Normal condition (LWL)
  - III.8.3 Case – III,Earthquake condition (HWL)
  - III.8.4 Case – IV,Earthquake condition (LWL)
- III.9 Resume Load on Abutment Section
- III.10 Reinforcing steel bar

Project : Medan Flood Control	Japan International	Calculation sheet	
Channel : Medan Flood Way	Cooperation Agency	Date	
Structure: Br – F1	(JICA)	Nos of sheet	
Station : FW 06 + 90		Prepared by	

III FOUNDATION

III.1 Charateristic of steel pipe pile

III.1.1 Normal condition

t' = thick of steel pipe corrotion.
do = outer diameter of steel pipe
t = thick of steel pipe after corrosion
di = Inner diameter of steel pipe
Beta = characteristic value of pile
d = outside diameter of pile before corrotion
de = outside diameter of pile after corrotion
delta = the standard amount of displacement (cm)
k = coefficuent of horizontal subgrade reaction (kg/cm2)
Eo = modulus of deformation of the ground obtained from table 3.5

Inersia

Ic = Inersia concrete
Is = Inersia steel

Modulus elasticvty

Es = pile/steel
Ec = concrete

thick of corosion = t' = 0.100 x 1.0310 = 0.1031 cm
normal thick = te = 1.031 – 0.1031 = 0.9279 cm
de effective = do – 2 x te
de = 40.00 – 2.00 x 0.9279
= 40.00 – 1.86
= 38.14 cm
di = (de – (2 x t) cm
= 38.14 – 2.00 x 0.93
= 38.14 – 1.86
= 36.29 cm
de^4 = 2,116,967 cm4
di^4 = 1,734,089 cm4
de^4 – di^4 = 2,116,967 – 1,734,089
= 382,878 cm4

$$Beta = \left(\frac{kh.de}{4.E.I}\right)^{0.25}$$

kho = 1/30 x alpa x Eo
Alpha = 0.20 from table 3.5
Eo = 28 x N
= 28.00 x 10.00
= 280 kg/cm3

Permanent load

Ec (K=225) = 257,495 kg/cm2
Es = 1,897,200 kg/cm2

$$1/n = \frac{257{,}495}{1{,}897{,}200}$$

= 0.1357
Ixc = @pi/64 x de^4 x 1/n
= 0.05 x 2,116,967 x 0.13572
= 14,104 cm^4
Ixs = @pi/64 x (de^4 – di^4)
= 0.05 x 382,878
= 18,794 cm4

Ix tot. = Ixc + Ixs
= 14,104 + 18,794
= 32,898 cm2

chars=n

E.I = 1,897,200 x 32,898
= 62,414,849,390 kg.cm2

4.E.I = 4 x 62,414,849,390
= 249,659,397,562 kg.cm2

kho = 1/30 x Alpa x Eo
= 0.03 x 1 x 280
= 9.33 kg/cm3

kh = kho x ((Bh)/30)^–0.75 (1)------ equition

Bh = @sqrt (de / Beta)

$$\frac{de}{Beta} = \frac{38.1442}{0.005031} = 7{,}582.47$$

------>>>> Beta find by trial

Bh = 87.08
87.08

$$Bh/30 = \frac{87.08}{30.00} = 2.90$$

(Bh/30)^–0.75 = 0.45

kh = 9.33 x 0.45
= 4.1971

$$Beta = \left(\frac{kh \times de}{4.EI}\right)^{0.25}$$ (2)----- equition

$$kh = \frac{Beta^4 \times 4.EI}{de}$$

$$kh = \frac{6.404308E-10}{38.1442} \times 249{,}659{,}397{,}562$$

------ (1) = ------ (2)

4.1971 = 4.1917 kg/cm3

By trial method, kh left side equal to kh right side

kh = 4,191.71 ton / m3
Beta = 0.005031 cm–1
Beta = 0.503058 m–1

kh.D = 4.19 x 38.14
= 159.89 kg/cm2

Allowance Horizontal Force

$$Han = \frac{kh.D}{Beta} \times delta$$

$$Han = \frac{159.89}{0.01} \times 1.00$$

= 31,784 kg
= 31.784 ton

chars=n

Project : Medan Flood Control Channel : Medan Flood Way Structure: Br – F1 Station : FW 06 + 90	Japan International Cooperation Agency (JICA)	Calculation sheet Date Nos of sheet Prepared by

III.2.1 Earthquake condition

t' = thick of steel pipe corrotion.
do = outer diameter of steel pipe
t = thick of steel pipe after corrosion
di = Inner diameter of steel pipe
Beta = characteristic value of pile
d = outside diameter of pile before corrotion
de = outside diameter of pile after corrotion
delta = the standard amount of displacement (cm)
k = coefficuent of horizontal subgrade reaction (kg/cm2)
Eo = modulus of deformation of the ground obtained from table 3.5

Inersia

Ic = Inersia concrete
Is = Inersia steel

Modulus elasticyty

Es = pile/steel
Ec = concrete

thick of corosion = t' = 0.100 x 1.0310 = 0.1031 cm
normal thick = tc = 1.031 – 0.1031 = 0.9279 cm
de effective = do – 2 x tc
de = 40.00 – 2.00 x 0.9279
= 40.00 – 1.86
= 38.14 cm
di = (de – (2 x t) cm
= 38.14 – 2.00 x 0.93
= 38.14 – 1.86
= 36.29 cm
de^4 = 2,116,967 cm4
di^4 = 1,734,089 cm4
de^4 – di^4 = 2,116,967 – 1,734,089
= 382,878 cm4

$$Beta = \left(\frac{kh.de}{4.E.I}\right)^{0.25}$$

kho = 1/30 x alpa x Eo
Alpha = 0.20 from table 3.5
Eo = 28 x N
= 28.00 x 10.00
= 280 kg/cm3

Temporary load
Ec (K-225) = 386,242 kg/cm2
Es = 1,897,200 kg/cm2

$$1/n = \frac{386{,}242}{1{,}897{,}200}$$

= 0.2036
Ixc = @pi/64 x de^4 x 1/n
= 0.05 x 2,116,967 x 0.20359
= 21,156 cm^4
Ixs = @pi/64 x (de^4 – di^4)
= 0.05 x 382,878
= 18,794 cm4
Ix tot. = Ixc + Ixs
= 21,156 + 18,794
= 39,950 cm2
E.I = 1,897,200 x 39,950
= 75,793,769,494 kg.cm2

chars=q

4 - 312

4.E.I = 4.00 x 75,793,769,494
= 303,175,077,976 kg.cm2

kho = 1/30 x Alpa x Eo
= 0.03 x 1 x 280
= 9.33 kg/cm3

kh = kho x {(Bh) / 30 }^ –0.75 (1)------ equition

Bh = @sqrt (de / Beta)

$$\frac{de}{Beta} = \frac{38.1442}{0.004771} = 7{,}995.58$$

------>>>> Beta find by trial

Bh = 89.42

$$Bh/30 = \frac{89.42}{30.00} = 2.98$$

(Bh/30)^ –0.75 = 0.44

kh = 9.33 x 0.44
= 4.1144

$$Beta = \left(\frac{kh \times de}{4.E.I}\right)^{0.25}$$ (2)----- equition

$$kh = \frac{Beta^4 \times 4.E.I}{de}$$

$$kh = \frac{5.18E-10}{38.1442} \times 303{,}175{,}077{,}976$$

------ (1) = ------ (2)

4.1144 = 4.1170 kg/cm3

By trial method, kh left side equal to kh right side

kh = 4,116.97 ton / m3
Beta = 0.004771 cm–1
Beta = 0.477066 m–1

kh.D = 4.12 x 38.14
= 157.04 kg/cm2

Allowance Horizontal Force

$$Han = \frac{kh.D}{Beta} \times delta$$

$$Han = \frac{157.04}{0.00} \times 1.00$$

= 32,918 kg
= 32.918 ton

chars=q

Project	: Medan Flood Control	Japan International Cooperation Agency (JICA)	Calculation sheet	
Channel	: Medan Flood Way		Date	
Structure	: Br – F1		Nos of sheet	
Station	: FW 06 + 90		Prepared by	

III.2 Axial load of pile

do	=	outer diameter of a pile (cm)					
di	=	inner diameter of a pile (cm)					
t	=	normal thick					
te	=	effective thick					
t'	=	corrosion thick					
de	=	dia. effective					
Ap1	=	area of a pile (cm2)					
Lp	=	Length of pile					
d	=	40.64	cm				
t	=	1.031	cm				
t'	=	0.10 x t					
	=	0.10	x	1.0310			
	=	0.1031	cm				
te	=	t – t'					
	=	1.0310	–	0.1031			
	=	0.9279	cm				
de	=	do – 2 x te					
	=	40.64	–	1.86			
	=	38.78	cm				
re	=	0.1939	m				
di	=	(de – (2 x te)	cm				
	=	38.78	–	1.856			
	=	36.93	cm				
de^2	=	1504.21	cm2				
di^2	=	1,363.7067	cm2				
de^2–di^2	=	1,504.2142	–	1363.71			
	=	140.5074	cm2				
	=	0.0141	m2				
	=	0.25	x	3.14	x(	de^2	– di^2)
	=	0.25	x	3.14	x	140.5074	
	=	110.35	cm2				
	=	0.0110	m2				

Modulus Elasticity

Steel							
Ep	=	1,897,200	kg/cm2				
	=	18,972,000	t/m2				
Concrete K.225							
Ec	=	242,201	kg/cm2				
		2,422,010	t/m2				
1/n	=	Ec / Ep					
		242,201 / 1,897,200	=	0.1277			
di–transforme	=	d t					
dt	=	di x 1/n					
	=	36.93	x	0.1277			
	=	4.7144	cm				
dt^2	=	22.2252	cm2				

axl–alw

de^2 – dt^2	=	1504.21	–	22.23				
	=	1481.99						
Ap2	=	@pi/64 x (de^2–(dt)^2)						
	=	0.25	x	3.14	x	1,481.99		
	=	1,163.95	cm2					
	=	0.1164	m2					
Ap	=	Ap1	+	Ap2				
	=	0.0110	+	0.1164				
	=	0.1274	m2					
Lp	=	16.00	m					
N1	=	50.00						
N	=	40.00						

N – value of embedded

N–value top	N–value bot.	Elv. top	Elv. bot.	avrg depth	tot depth	avrg N–value	tot. N–value	Kind of soils	soil fricti (t/m2)	lixfi
8.00	36.00	28.500	27.631	0.87	0.87	22.00	19.12	medium sa	3.30	2.87
36.00	37.00	27.631	26.631	1.00	1.87	36.50	36.50	do	3.30	3.30
37.00	39.00	26.631	25.631	1.00	2.87	38.00	38.00	do	3.30	3.30
39.00	37.00	25.631	24.631	1.00	3.87	38.00	38.00	do	3.30	3.30
37.00	22.00	24.631	23.631	1.00	4.87	29.50	29.50	fine sand	6.80	6.80
22.00	24.00	23.631	22.631	1.00	5.87	23.00	23.00	do	6.80	6.80
24.00	40.00	22.631	21.631	1.00	6.87	32.00	32.00	do	6.80	6.80
40.00	45.00	21.631	20.631	1.00	7.87	42.50	42.50	do	6.80	6.80
45.00	36.00	20.631	19.631	1.00	8.87	40.50	40.50	do	6.80	6.80
36.00	36.00	19.631	18.631	1.00	9.87	36.00	36.00	do	6.80	6.80
36.00	18.00	18.631	17.631	1.00	10.87	27.00	27.00	do	6.80	6.80
18.00	22.00	17.631	16.631	1.00	11.87	20.00	20.00	do	6.80	6.80
22.00	19.00	16.631	15.631	1.00	12.87	20.50	20.50	do	6.80	6.80
19.00	28.00	15.631	14.631	1.00	13.87	23.50	23.50	do	6.80	6.80
28.00	49.00	14.631	13.631	1.00	14.87	38.50	38.50	do	6.80	6.80
49.00	50.00	13.631	12.631	1.00	15.87	49.50	49.50	do	6.80	6.80
50.00	50.00	12.631	11.631	1.00	16.87	50.00	50.00	do	6.80	6.80
			sum	16.87			564.12		101.60	101.17
N – value average			=	564.12	:	16.87	=	33.44		

Material is fine sand

$$N = \frac{N1 + N2'}{2}$$

N2' = mean N–value in the range from the tip of the pile to 4 x D above.

N2' = 50.00 + 50.00 = 50.00

N2' = 50.00

$$N = \frac{50.00 + 50.00}{2}$$

= 50.00 > 40

= 40

Ru = Ultimate bearing capacity of the pile

li = statum thickness with the skin friction power taken into account (m)

fi = maximum unit area skin friction power of statum with the skin friction power taken into account (t/m2)

4.D	=	4.00	x	0.3878	=	1.55	m
l = 1/2 x 4 D	=	0.50	x	1.55	=	0.78	m
l/D	=	0.78	:	0.39	=	2.00	
qd/N	=	8.00					

axl–alw

qd	=	8.00	x	N							
	=	8.00	x	40.00							
	=	320.00	ton/m2								
qd.Ap	=	320	x	0.1274							
	=	40.78	ton								
U	=	2 x @pi x re									
	=	2.00	x	3.14	x	0.1939					
	=	1.22	m								
Ru	=	qd.A + U.(total li.fi)									
	=	40.78	+	1.22	x	101.17					
	=	164.045	ton								
Lc	=	Length of pile filled by concrete									
	=	5.33	m								
Y soil	=	2.00	t/m3								
Ws	=	Effective weight of soil which replace by pile									
	=	0.25	x	@pi	x	de^2	x	Lp		Ysoil	
	=	0.25	x	3.14	x	0.15	x	16.00	x	2.00	
	=	3.78	ton								
W	=	Effective weight of concrete which filled in the pile									
	=	0.25		@pi		di^2		Lc		Y concrete	
	=	0.25	x	3.14	x	0.1364	x	5.33	x	2.50	
	=	1.43	ton								

Force bearing capacity of a pile in Pier

Permanent load safety factor Sn = 3.00

Temporary load safety factor Sq = 2.00

Case – I, Normal Condition

Ran	=	1/Sn	x(	Ru	–	Ws)	+	Ws	–	W	
	=	1.00/3.00	x(	164.04	–	3.78	)+	3.78	–	1.43	
Ran	=	0.33	x(	160.26	)+	2.35					
	=	53.42	+	2.35							
	=	55.77	ton/nos								

by material of pile 4/4

Rp	=	Ap 1 x fs	=	110.35	x	1.400	=	154,496	kg
Rp	=	154.50	ton						
R minimum	=	55.77	ton						

Case – II, Earthquake Condition

Raq	=	1.00/2.00	x(	164.04	–	3.78	)+	3.78	–	1.43
	=	0.50	x(	160.26	) +	2.35				
	=	80.13	+	2.35						
	=	82.48	ton/nos							

Case		V	H	M	Allowance bearing pile		Nos of pile	
		ton	ton	ton.m	Vertical	Horizontal	Vertical	Horizontal
		Normal condition						
case – I	Hwl	1222.40	82.74	–239.07	55.77	31.66	21.92	2.61
case – II	Lwl	1167.78	190.31	9.74	55.77	31.66	20.94	6.01
case – III	Hwl	1222.40	248.37	–746.15	82.48	32.69	14.82	7.60
case – IV	Lwl	1167.78	347.62	–509.26	82.48	32.69	14.16	10.63

Project : Medan Flood Control	Japan International Cooperation Agency (JICA)	Calculation sheet
Channel : Medan Flood Way		Date
Structure: Br – F1		Nos of sheet
Station : FW 06 + 90		Prepared by

III.3 Spring Constante of steel pipe pile

III.3.1 Normal condition

h	=	axial length of pile above the design groung surface
Beta	=	charateristic value of pile
k	=	coeficient of horozontal sub grade reaction (kg/cm^2)
IE	=	flexural rigidity of pile
K1,K2,K3&	=	spring constante
Kv	=	Axial force (axial spring constante)
t	=	thick of steel pipe before corrotion (cm)
t'	=	thick of steel pipe corrosion (cm)
te	=	thick of steel pipe after corrosion (cm)

		40.64	cm		
		1.031	cm		
		0.103	cm		
te	=	1.0310	–	0.1031	
	=	0.9279	cm		
de	=	d	–	2 x te	
	=	40.64	–	1.8558	
	=	38.78	cm		
de^2	=	1,504.21	cm2		
di	=	(de – (2 x te)	cm		
	=	38.78	–	1.8558	
	=	36.93	cm		
di^2	=	1,363.71	cm2		
de^2 – di	=	1,504.21	–	1,363.71	
	=	140.51	cm2		
de^4	=	2,262,660	cm4		
di^4	=	1,859,696	cm4		
de^4 – di'	=	2,262,660	–	1,859,696	
	=	402,964	cm4		

Modulus Elasticity

Permanent load

Ec (K-225	=	257,495	kg/cm2	
Es	=	1,897,200	kg/cm2	
1/n	=	257,495/1,897,200	=	0.1357
dt	=	di x 1/n		
	=	36.9284	x	0.1357
	=	5.0121	cm	
dt^2	=	25.1207	cm2	
Ixc	=	@pi/64 x (dt^4)		
	=	0.0491	x	631
	=	30.98	cm^4	
Ixc	=	@pi/64 x (de^4 – di^4)		
	=	0.04909	x	402,964
	=	19,780	cm4	
I tot.	=	Ixc	+	Ixc
	=	30.9767	+	19,780.46
	=	19,811.44	cm4	
	=	0.000198114	m4	

ks-n

As1	=	1/4 x 3.14 x dt^2					
	=	0.25	x	3.14	x	25.12	
	=	19.73	cm2				
As2	=	1/4 3.14 (de^2 − di^2)					
	=	0.25	x	3.14	x	140.51	
	=	110.35	cm2				
A tot.	=	As1	+	As2			
	=	19.73	+	110.35			
	=	130.08	cm2				
	=	0.013008406	m2				
Lp	=	16.00	m				

$$Kv = a \times \frac{A\,tot.}{Lp} \times Ep$$

$$a = 0.027 \times \frac{Lp}{de} + 0.2$$

$$= 0.027 \times \frac{1,600.00}{38.7842} + 0.2$$

$$= 1.11386 + 0.2000$$

$$= 1.3139$$

Spring constante on axial force = Kv

$$Kv = a \times \frac{A\,tot. \times Epile}{Le}$$

$$= 1.31 \times \frac{130.08 \times 1,897,200}{1,600}$$

	=	1.31	x	154,247
	=	202,658.53	kg/cm	
	=	20,266	ton/m	
EI	=	1,897,200	x	19,811
	=	3.76E+10	kg.cm2	
	=	3,759	t.m2	
2.EI	=	2.00	x	3.76E+03
	=	7,517	t.m2	
4.EI	=	4	x	3,759
	=	15,035	t.m2	
Beta	=	0.00503058	cm−1	
Beta	=	0.503058	m−1	

Spring constante K1,K2 and K3

K1	=	4.EI.Beta^3		
	=	1.50E+04	x	0.127307
	=	1,914	t/m	
K2=K3	=	2.EI.Beta^2		
	=	7,517	x	0.253067
	=	1,902	t/rad	
K4	=	2.EI.Beta		
	=	7,517.25	x	0.503058
	=	3,782	t.m/rad	

ks−n

Project : Medan Flood Control	Japan International Cooperation Agency (JICA)	Calculation sheet	
Channel : Percut River		Date	
Structure : Br. F − 1		Nos of sheet	
Station : FW 06 + 90 m		Prepared by	

III.3.2 Earthquake condition

h	=	axial length of pile above the design groung surface
Beta	=	charateristic value of pile
k	=	coeficient of horozontal sub grade reaction (kg/cm^2)
IE	=	flexural rigidity of pile
K1,K2,K3	=	spring constante
Kv	=	Axial force (axial spring constante)
t	=	thick of steel pipe before corrotion (cm)
t'	=	thick of steel pipe corrosion (cm)
te	=	thick of steel pipe after corrosion (cm)

d	=	40.64	cm	
t	=	1.031	cm	
t'	=	0.103	cm	
te	=	1.0310	−	0.1031
	=	0.9279	cm	
de	=	d	− 2 x te	
	=	40.64	−	1.8558
	=	38.78	cm	
de^2	=	1,504.21	cm2	
di	=	(de − (2 x te)	cm	
	=	38.78	−	1.8558
	=	36.93	cm	
di^2	=	1,363.71	cm2	
de^2 − di	=	1,504.21	−	1,363.71
	=	140.51	cm2	
de^4	=	2,262,660	cm4	
di^4	=	1,859,696	cm4	
de^4 − di^	=	2,262,660	−	1,859,696
	=	402,964	cm4	

Modulus Elasticity

Temporary load

Ec (K−225	=	386,242	kg/cm2	
Ea	=	1,897,200	kg/cm2	
1/n	=	386,242 / 1,897,200	=	0.2036
dt	=	di x 1/n		
	=	36.9284	x	0.2036
	=	7.5181	cm	
dt^2	=	56.5215	cm2	
I1	=	@pi/64 x (dt^4)		
	=	0.0491	x	3,195
	=	156.82	cm^4	
I2	=	@pi/64 x (de^4 − di^4)		
	=	0.04909	x	402,964
	=	19,780	cm4	
I tot.	=	I1	+	I2
	=	157	+	19,780.46
	=	19,937.28	cm4	
	=	0.00019	m4	

ks−q

As1	=	1/4 x 3.14 x dt^2				
	=	0.25	x	3.14	x	56.52
	=	44.39 cm2				
As2	=	1/4.3.14.(de^2−di^2)				
	=	0.25	x	3.14	x	140.51
	=	110.35 cm2				
A tot.	=	As1	+	As2		
	=	44.39	+	110.35		
	=	154.75 cm2				
	=	0.01547 m2				
Lp	=	16.00 m				

$$Kv = s \times \frac{A\,tot.}{Lp} \times Ep$$

$$s = 0.027 \times \frac{Lp}{de} + 0.2$$

$$= 0.027 \times \frac{1,600.00}{38.78} + 0.2$$

$$= 1.11386 + 0.2000$$

$$= 1.3139$$

Spring constante on axial force = Kv

$$Kv = s \times \frac{A\,tot. \times Epile}{Lp}$$

$$= 1.31 \times \frac{154.75 \times 1,897,200}{1,600}$$

$$= 1.31 \times 183,490$$

$$= 241,079.74\ kg/cm$$

$$= 24,108\ ton/m$$

EI	=	1,897,200	x	19,937		
	=	3.78E+10 kg.cm2				
	=	3,783 t.m2				
2.EI	=	2	x	3.78E+03		
	=	7,565 t.m2				
4.EI	=	4	x	3,783		
	=	15,130 t.m2				
Beta	=	0.00477 cm−1				
Beta	=	0.47706 m−1				

Spring constante K1,K2 and K3

K1	=	4.EI.Beta^3				
	=	1.51E+04	x	0.108576		
	=	1,643 t/m				
K2=K3	=	2.EI.Beta^2				
	=	7,565	x	0.227591		
	=	1,722 t/rad				
K4	=	2.EI.Beta				
	=	7,565.00	x	0.477066		
	=	3,609 t.m/rad				

ks−q

Project : Medan Flood Control	Japan International Cooperation Agency (JICA)	Calculation sheet	
Channel : Medan Flood Way		Date	
Structure : Br − F1		Nos of sheet	
Station : FW 06 + 90		Prepared by	

III.4 Displacement of head pile
III.4.1 Normal condition

Axx = tot.(K1 x cos^2 ø + Kv x sin ^2 ø)
Axy = tot.(Kv − K1) x sin ø x cos ø)
Ayx = tot.(Kv − K1) x sin ø x cos ø)
Axa = tot.(KV − K1) x Xi x (sin ø x cos ø) − (K2 x cos ø))
Aax = tot.(KV − K1) x Xi x (sin ø x cos ø) − (K2 x cos ø))
Ayy = tot.(KV x cos ^2 ø + (K1 x sin ^2 ø))
Aya = tot.(KV x cos ^2 ø + K1 x sin ^2 ø) x Xi + K2 x sin ø)
Aay = tot.(KV x cos ^2 ø + K1 x sin ^2 ø) x Xi + K2 x sin ø)
Aaa = tot.(KV x cos ^2 ø + K1 x sin ^2 ø) x Xi ^2 ^ + (K2 + K3).Xi sin ø + K4)

		Rows (1) L/s (−) > 0	(2) L/s (−) 0	(3) R/s (+) < 0	(4) R/s (+) < 0	Total
Nos. of row						
side						
sign						
angle						
Xi	=	(1.875)	(0.625)	0.625	1.875	
n	=	7.00	7.00	7.00	7.00	
angle degree	=	0.0000	0.0000	0.0000	5.71	
sin ø	=	0.0000	0.00	0.00	0.10	
cos ø	=	1.0000	1.0000	1.0000	0.9950	
sin ø x cosø	=	0.0000	0.00	0.00	0.10	
sin ^2 ø	=	0.0000	0.00	0.00	0.01	
cos ^2 ø	=	1.0000	1.0000	1.0000	0.9901	
Xi ^2	=	3.5156	0.3906	0.3906	3.5156	
K1	=	1,914.00	1,914.00	1,914.00	1,914.00	
K2	=	1,902.00	1,902.00	1,902.00	1,902.00	
K3	=	1,902.00	1,902.00	1,902.00	1,902.00	
K4	=	3,782.00	3,782.00	3,782.00	3,782.00	
Kv	=	20,266.00	20,266.00	20,266.00	20,266.00	
n.K1	=	13,398	13,398	13,398	13,398	
n.K2	=	13,314	13,314	13,314	13,314	
n.K3	=	13,314	13,314	13,314	13,314	
n.K4	=	26,474	26,474	26,474	26,474	
n.Kv	=	141,862	141,862	141,862	141,862	
n.(K2 + K3)	=	26,628	26,628	26,628	26,628	
Xi.(n.(K2 + K3))	=	(49,928)	(16,643)	16,643	49,928	
Xi.(n.(K2 + K3)).sin ø	=	0	0	0	4,967	
n.(Kv−K1)	=	128,464	128,464	128,464	128,464	
n.(Kv−K1).sin ø.cosø	=	0	0	0	12,718	
n.K1.cos ^2 ø	=	13,398	13,398	13,398	13,265	
n.Kv.sin ^2 ø	=	0	0	0	1,404	
n.Kv.cos ^2 ø	=	141,862	141,862	141,862	140,458	
n.K1.sin ^2 ø	=	0	0	0	133	
n.K1.sin ø.cosø	=	0	0	0	1,326	
n.Kv.sin ø.cosø	=	0	0	0	14,044	
Xi.(n.K1.sin ø.cos ø)	=	0	0	0	2,487	
Xi.(n.Kv.sin ø.cos ø)	=	0	0	0	26,333	

coe−disn

n.K2.cos ø	=	13,314	13,314	13,314	13,248
n.K2.sin ø	=	0	0	0	1,325
n.K3.sin ø	=	0	0	0	1,325
Xi.(n.Kv.cos ^2 ø)	=	(265,991)	(88,664)	88,664	263,358
Xi.(n.K1.sin ^2 ø)	=	0	0	0	249
Xi^2.(n.Kv.cos ^2 ø)	=	498,734	55,415	55,415	493,797
Xi^2.(n.K1.sin ^2 ø)	=	0	0	0	466
Xi.(n.K2.sin ø)	=	0	0	0	2,484
Xi.(n.K3.sin ø)	=	0	0	0	

Axx = tot.(K1 x cos ^2 ø + Kv x sin ^2 ø)

n.K1.cos ^2 ø	=	13,398	13,398	13,398	13,265
n.Kv.sin ^2 ø	=	0	0	0	1,404
total		13,398	13,398	13,398	14,670	54,864

Axy = tot.(Kv − K1) x sin ø x cos ø)

n.(Kv−K1).sin ø.cosø	=	0	0	0	12,718	
A xy	=	0	0	0	12,718	12,718
A yx	=	0	0	0	12,718	12,718

Axa = tot.(KV − K1) x Xi x (sin ø x cos ø) − (K2 x cos ø))

Xi.(n.(Kv − K1).sin ø.cc	=	0	0	0	23,846	
− n.K2.cos ø	=	(13,314)	(13,314)	(13,314)	(13,248)	
Axa		(13,314)	(13,314)	(13,314)	10,598	(29,344)
Aax	=	(13,314)	(13,314)	(13,314)	10,598	(29,344)

Ayy = tot.(KV x cos ^2 ø + (K1 x sin ^2 ø))

n.Kv.cos ^2 ø	=	141,862	141,862	141,862	140,458	
n.K1.sin ^2 ø	=	0	0	0	133	
Ayy		141,862	141,862	141,862	140,590	566,176

Aya = tot.(KV x cos ^2 ø + K1 x sin ^2 ø) x Xi + K2 x sin ø)

Xi.(n.Kv.cos ^2 ø)	=	(265,991)	(88,664)	88,664	263,358	
Xi.(n.K1.sin ^2 ø)	=	0	0	0	249	
n.K2.sin ø	=	0	0	0	1,325	
Aya	=	(265,991)	(88,664)	88,664	264,932	(1,060)
Aay	=	(265,991)	(88,664)	88,664	264,932	(1,060)

Aaa = tot.(KV x cos ^2 ø + K1 x sin ^2 ø) x Xi ^2 ^ + (K2+K3) Xi sin ø + K4)

Xi^2.(n.Kv.cos ^2 ø)	=	498,734	55,415	55,415	493,797	
Xi^2.(n.K1.sin ^2 ø)	=	0	0	0	466	
n.(K2+K3).Xi.sin ø	=	0	0	0	4,967	
n.K4	=	26,474	26,474	26,474	26,474	
Aaa		525,208	81,889	81,889	525,704	1,214,690

Project : Medan Flood Control	Japan International Cooperation Agency (JICA)	Calculation sheet	
Channel : Medan Flood Way		Date	
Structure : Br − F1		Nos of sheet	
Station : FW 06 + 90		Prepared by	

III.4.2 Earthquake condition

Axx = tot.(K1 x cos ^2 ø + Kv x sin ^2 ø)
Axy = tot.(Kv − K1) x sin ø x cos ø)
Ayx = tot.(Kv − K1) x sin ø x cos ø)
Axa = tot.(KV − K1) x Xi x (sin ø x cos ø) − (K2 x cos ø))
Aax = tot.(KV − K1) x Xi x (sin ø x cos ø) − (K2 x cos ø))
Ayy = tot.(KV x cos ^2 ø + (K1 x sin ^2 ø))
Aya = tot.(KV x cos ^2 ø + K1 x sin ^2 ø) x Xi + K2 x sin ø)
Aay = tot.(KV x cos ^2 ø + K1 x sin ^2 ø) x Xi + K2 x sin ø)
Aaa = tot.(KV x cos ^2 ø + K1 x sin ^2 ø) x Xi ^2 ^ + (K2 + K3).Xi sin ø + K4)

		Rows				Total
Nos. of row		(1)	(2)	(3)	(4)	
side		L/s	L/s	R/s	R/s	
sign		(−)	(−)	(+)	(+)	
angle		< 0	< 0	> 0	> 0	
Xi	=	(1.875)	(0.625)	0.625	1.875	
n	=	7.00	7.00	7.00	7.00	
angle degree	=	0.0000	0.0000	0.0000	5.71	
sin ø	=	0.0000	0.00	0.00	0.10	
cos ø	=	1.0000	1.0000	1.0000	0.9950	
sin ø x cosø	=	0.0000	0.00	0.00	0.10	
sin ^2 ø	=	0.0000	0.00	0.00	0.01	
cos ^2 ø	=	1.0000	1.0000	1.0000	0.9901	
Xi ^2	=	3.5156	0.3906	0.3906	3.5156	
K1	=	1,643.00	1,643.00	1,643.00	1,643.00	
K2	=	1,722.00	1,722.00	1,722.00	1,722.00	
K3	=	1,722.00	1,722.00	1,722.00	1,722.00	
K4	=	3,609.00	3,609.00	3,609.00	3,609.00	
Kv	=	24,108.00	24,108.00	24,108.00	24,108.00	
n.K1	=	11,501	11,501	11,501	11,501	
n.K2	=	12,054	12,054	12,054	12,054	
n.K3	=	12,054	12,054	12,054	12,054	
n.K4	=	25,263	25,263	25,263	25,263	
n.Kv	=	168,756	168,756	168,756	168,756	
n.(K2 + K3)	=	24,108	24,108	24,108	24,108	
Xi.(n.(K2 + K3))	=	(45,203)	(15,068)	15,068	45,203	
Xi.(n.(K2 + K3)).sin ø	=	0	0	0	4,497	
n.(Kv−K1)	=	157,255	157,255	157,255	157,255	
n.(Kv−K1).sin ø.cosø	=	0	0	0	15,568	
n.K1.cos ^2 ø	=	11,501	11,501	11,501	11,387	
n.Kv.sin ^2 ø	=	0	0	0	1,671	
n.Kv.cos ^2 ø	=	168,756	168,756	168,756	167,085	
n.K1.sin ^2 ø	=	0	0	0	114	
n.K1.sin ø.cosø	=	0	0	0	1,139	
n.Kv.sin ø.cosø	=	0	0	0	16,707	
Xi.(n.K1.sin ø.cos ø)	=	0	0	0	2,135	
Xi.(n.Kv.sin ø.cos ø)	=	0	0	0	31,325	

n.K2.cos ø	=	12,054	12,054	12,054	11,994	
n.K2.sin ø	=	0	0	0	1,199	
n.K3.sin ø	=	0	0	0	1,199	
Xi.(n.Kv.cos ^2 ø)	=	(316,418)	(105,473)	105,473	313,285	
Xi.(n.K1.sin ^2 ø)	=	0	0	0	213	
Xi ^2.(n.Kv.cos ^2 ø)	=	593,283	65,920	65,920	587,410	
Xi ^2.(n.K1.sin ^2 ø)	=	0	0	0	400	
Xi.(n.K2.sin ø)	=	0	0	0	2,249	
Xi.(n.K3.sin ø)	=	0	0	0		1/2

						total
Axx = tot.(K1 x cos ^2 ø + Kv x sin ^2 ø)						
n.K1.cos ^2 ø	=	11,501	11,501	11,501	11,387	
n.Kv.sin ^2 ø	=	0	0	0	1,671	
total		11,501	11,501	11,501	13,058	47,561
Axy = tot.(Kv − K1) x sin ø x cos ø)						
n.(Kv−K1).sin ø.cosø	=	0	0	0	15,568	
A xy	=	0	0	0	15,568	15,568
A yx	=	0	0	0	15,568	15,568
Axa = tot.(KV − K1) x Xi x (sin ø x cos ø) − (K2 x cos ø))						
Xi.(n.(Kv − K1).sin ø.cc	=	0	0	0	29,190	
− n.K2.cos ø	=	(12,054)	(12,054)	(12,054)	(11,994)	
Axa		(12,054)	(12,054)	(12,054)	17,196	(18,966)
Aax	=	(12,054)	(12,054)	(12,054)	17,196	(18,966)
Ayy = tot.(KV x cos ^2 ø + (K1 x sin ^2 ø))						
n.Kv.cos ^2 ø	=	168,756	168,756	168,756	167,085	
n.K1.sin ^2 ø	=	0	0	0	114	
Ayy		168,756	168,756	168,756	167,199	673,467
Aya = tot.(KV x cos ^2 ø + K1 x sin ^2 ø) x Xi + K2 x sin ø)						
Xi.(n.Kv.cos ^2 ø)	=	(316,418)	(105,473)	105,473	313,285	
Xi.(n.K1.sin ^2 ø)	=	0	0	0	213	
n.K2.sin ø	=	0	0	0	1,199	
Aya	=	(316,418)	(105,473)	105,473	314,698	(1,719)
Aay	=	(316,418)	(105,473)	105,473	314,698	(1,719)
Aaa = tot.(KV x cos ^2 ø + K1 x sin ^2 ø) x Xi ^2 + (K2+K3) Xi sin ø + K4)						
Xi ^2.(n.Kv.cos ^2 ø)	=	593,283	65,920	65,920	587,410	
Xi ^2.(n.K1.sin ^2 ø)	=	0	0	0	400	
n.(K2+K3).Xi.sin ø	=	0	0	0	4,497	
n.K4	=	25,263	25,263	25,263	25,263	
Aaa		618,546	91,183	91,183	617,571	1,418,483

coe−disq

Project : Medan Flood Control Channel : Medan Flood Way Structure : Br − F1 Station : FW 06 + 90	Japan International Cooperation Agency (JICA)	Calculation sheet Date Nos of sheet Prepared by

III.5 Coefficient displacement of head pile
III.5.1 Normal condition
Case − I ,High Water Level

Axx	dx	+	Axy	dy	+	Axa	dz	= H
Ayx	dx	+	Ayy	dy	+	Aay	dz	= V
Aax	dx	+	Aay	dy	+	Aaa	dz	= M

54,864	dx	+	12,718	dy	+	(29,344)	dz = 82.74 H
12,718	dx	+	566,176	dy	+	(1,060)	dz = 1,222.40 V
(29,344)	dx	+	(1,060)	dy	+	1,214,690	dz = (239.07) M

det A

5.466E+04	566176	−1060 =
	−1060	1214690
12718	12718	−1060 =
	−29344	1214690
−29344	12718	566176 =
	−29344	−1060

+	54864	x(	566176	x	1214690	−	−1060	x	−1060)	
	54864	x(	687726325440	−	−1123600	)				= 3.77E+16
−	12718	x(	12718	x	1214690	−	−29344	x	−1060)	
	12718	x(	15448427420	−	−31104640	)				= −1.98E+14
+	−29344	x(	12718	x	−1060	−	−29344	x	566176)	
	−29344	x(	−13481080	−	1.661E+10	)				= −4.87E+14
										3.70E+16

$$\frac{1}{\det} = \frac{1}{3.70E+16}$$

Kolector

a11	5.66E+05		−1.06E+03	+(	5.66E+05	x	1.21E+06	)−(−1.06E+03	x	−1.06E+03	)=	C11
	−1.06E+03		1.21E+06	+(	6.86E+11			)−(1.12E+06			=	6.86E+11
a12	1.27E+04		−1.06E+03	−(	1.27E+04	x	1.21E+06	)−(−2.93E+04	x	−1.06E+03	)=	C12
	−2.93E+04		1.21E+06	−(	1.54E+10			)−(3.11E+07			=	−1.54E+10
a13	1.27E+04		5.66E+05	+(	1.27E+04	x	−1.06E+03	)−(−2.93E+04	x	5.66E+05	)=	C13
	−2.93E+04		−1.06E+03	+(	−1.35E+07			)−(−1.66E+10			=	1.66E+10
a21	1.27E+04		−2.93E+04	−(	1.27E+04	x	1.21E+06	)−(−1.06E+03	x	−2.93E+04	)=	C21
	−1.06E+03		1.21E+06	−(	1.54E+10			)−(3.11E+07			=	−1.54E+10
a22	5.46E+04		−2.93E+04	+(	5.46E+04	x	1.21E+06	− −2.93E+04	x	−2.93E+04	)=	C22
	−2.93E+04		1.21E+06	+(	6.66E+10			− 8.81E+06			=	6.58E+10
a23	5.46E+04		1.27E+04	+(	5.46E+04	x	−1.06E+03	− −2.93E+04	x	1.27E+04	)=	C23
	−2.93E+04		−1.06E+03	+(	−5.82E+07			− −3.73E+06			=	−3.15E+06
a31	1.27E+04		−2.93E+04	+(	1.27E+04	x	−1.06E+03	− 5.66E+05	x	−2.93E+04	)=	C31
	5.66E+05		−1.06E+03	+(	−1.35E+07			− −1.66E+10			=	1.66E+10
a32	5.46E+04		−2.93E+04	−(	5.46E+04	x	−1.06E+03	− 1.27E+04	x	−2.93E+04	)=	C32
	1.27E+04		−1.06E+03	−(	−5.82E+07			− −3.73E+06			=	−3.15E+06
a33	5.46E+04		1.27E+04	+(	5.46E+04	x	5.66E+05	− 1.27E+04	x	1.27E+04	)=	C33
	1.27E+04		5.66E+05	+(	3.11E+10			− 1.62E+06			=	3.09E+10

C =

6.86E+11	−1.54E+10	1.66E+10
−1.54E+10	6.58E+10	−3.15E+06
1.66E+10	−3.15E+06	3.09E+10

Adj C = C t =

6.86E+11	−1.54E+10	1.66E+10
−1.54E+10	6.58E+10	−3.15E+06
1.66E+10	−3.15E+06	3.09E+10

$$A^{-1} = \frac{\text{adj A}}{\det A} = \frac{1}{\det A} \times \begin{vmatrix} 6.86E+11 & -1.54E+10 & 1.66E+10 \\ -1.54E+10 & 6.58E+10 & -3.15E+06 \\ 1.66E+10 & -3.15E+06 & 3.09E+10 \end{vmatrix} = \begin{vmatrix} 8.27E+01 & -1.54E+10 & 1.66E+10 \\ 8.27E+01 & 6.58E+10 & -3.15E+06 \\ 8.27E+01 & -3.15E+06 & 3.09E+10 \end{vmatrix} \begin{vmatrix} 1.22E+03 & 1.66E+10 & -2.39E+02 \\ 1.22E+03 & -3.15E+06 & -2.39E+02 \\ 1.22E+03 & 3.09E+10 & -2.39E+02 \end{vmatrix}$$

$$X = A^{-1}.b = \frac{1.00E+00}{3.70E+16} \begin{vmatrix} 5.69E+13 + & -1.86E+13 + & -3.97E+12 \\ -1.26E+12 + & 8.04E+13 + & 7.53E+10 \\ 1.37E+12 + & -3.85E+11 + & -7.39E+12 \end{vmatrix} =$$

$$X = \frac{1.00E+00}{3.70E+16} \times \begin{vmatrix} 3.41E+13 \\ 7.92E+13 \\ -6.40E+12 \end{vmatrix} = \begin{vmatrix} 9.20E-04 \\ 2.14E-03 \\ -1.73E-04 \end{vmatrix}$$

$$X = \begin{vmatrix} dx \\ dy \\ dz \end{vmatrix} = \begin{vmatrix} 0.00092009 \\ 0.00213805 \\ (0.00017272) \end{vmatrix}$$

Control

12,718.00	dx	+	566,176.00	dy	+	(1,060.00)	dz = 1,222.40
12718	x		0.0009200905	=		11.7017113	
566176	x		0.0021380546	=		1210.51520	
−1060	x		−0.0001727227	=		0.18306805	
						1222.4	= 1222.4

def−ht

III.5.2 Normal condition
Case – II , Low Water Level

Axx	dx	+	Axy	dy	+	Axz	dz	=	H
Ayx	dx	+	Ayy	dy	+	Ayz	dz	=	V
Azx	dx	+	Azy	dy	+	Azz	dz	=	M

54,864	dx	+	12,718	dy	+	(29,344)	dz	=	190.31 H
12,718	dx	+	566,176	dy	+	(1,060)	dz	=	1,167.78 V
(29,344)	dx	+	(1,060)	dy	+	1,214,690	dz	=	9.74 M

det A

5.486E+04	566176	−1060	=
	−1060	1214690	
12718	12718	−1060	=
	−29344	1214690	
−29344	12718	566176	=
	−29344	−1060	

+	54864	x(	566176	x	1214690	−	−1060	x	−1060)	
	54864	x(	687728325440	−	−1123600	)				= 3.77E+16
−	12718	x(	12718	x	1214690	−	−29344	x	−1060)	
	12718	x(	15448427420	−	−31104640	)				= −1.96E+14
+	−29344	x(	12718	x	−1060	−	−29344	x	566176)	
	−29344	x(	−13481080	−	1.661E+10	)				= −4.87E+14
										3.70E+16

$$\frac{1}{\det} = \frac{1}{3.70E+16}$$

Kolector

a11	5.66E+05	−1.06E+03	+(	5.66E+05	x	1.21E+06	)−(−1.06E+03	x	−1.06E+03	)=	C11	
	−1.06E+03	1.21E+06	+(	6.86E+11			)−(1.12E+06	)		=	6.86E+11	
a12	1.27E+04	−1.06E+03	−(	1.27E+04	x	1.21E+06	)−(−2.93E+04	x	−1.06E+03	)=	C12	
	−2.93E+04	1.21E+06	−(	1.54E+10			)−(3.11E+07	)		=	−1.54E+10	
a13	1.27E+04	5.66E+05	+(	1.27E+04	x	−1.06E+03	)−(−2.93E+04	x	5.66E+05	)=	C13	
	−2.93E+04	−1.06E+03	+(	−1.35E+07			)−(−1.66E+10	)		=	1.66E+10	
a21	1.27E+04	−2.93E+04	−(	1.27E+04	x	1.21E+06	)−(−1.06E+03	x	−2.93E+04	)=	C21	
	−1.06E+03	1.21E+06	−(	1.54E+10			)−(3.11E+07	)		=	−1.54E+10	
a22	5.49E+04	−2.93E+04	+(	5.49E+04	x	1.21E+06	− −2.93E+04	x	−2.93E+04	)=	C22	
	−2.93E+04	1.21E+06	+(	6.86E+10			− 8.61E+06	)		=	6.56E+10	
a23	5.49E+04	1.27E+04	+(	5.49E+04	x	−1.06E+03	− −2.93E+04	x	1.27E+04	)=	C23	
	−2.93E+04	−1.06E+03	+(	−5.82E+07			− −3.73E+06	)		=	−3.15E+06	
a31	1.27E+04	−2.93E+04	+(	1.27E+04	x	−1.06E+03	− 5.66E+05	x	−2.93E+04	)=	C31	
	5.66E+05	−1.06E+03	+(	−1.35E+07			− −1.66E+10	)		=	1.66E+10	
a32	5.49E+04	−2.93E+04	−(	5.49E+04	x	−1.06E+03	− 1.27E+04	x	−2.93E+04	)=	C32	
	1.27E+04	−1.06E+03	−(	−5.82E+07			− −3.73E+06	)		=	−3.15E+06	
a33	5.49E+04	1.27E+04	+(	5.49E+04	x	5.66E+05	− 1.27E+04	x	1.27E+04	)=	C33	
	1.27E+04	5.66E+05	+(	3.11E+10			− 1.62E+06	)		=	3.09E+10	

C =

6.86E+11	−1.54E+10	1.66E+10
−1.54E+10	6.56E+10	−3.15E+06
1.66E+10	−3.15E+06	3.09E+10

Adj C = Ct =

6.86E+11	−1.54E+10	1.66E+10
−1.54E+10	6.56E+10	−3.15E+06
1.66E+10	−3.15E+06	3.09E+10

$$A^{-1} = \frac{adj\,A}{det\,A} = \frac{1}{det\,A} \times \begin{vmatrix} 6.86E+11 & -1.54E+10 & 1.66E+10 \\ -1.54E+10 & 6.56E+10 & -3.15E+06 \\ 1.66E+10 & -3.15E+06 & 3.09E+10 \end{vmatrix} = \begin{vmatrix} 1.90E+02 & 1.17E+03 & 9.74E+00 \\ 1.90E+02 & 1.17E+03 & 9.74E+00 \\ 1.90E+02 & 1.17E+03 & 9.74E+00 \end{vmatrix}$$

$$X = A^{-1}.b = \frac{1.00E+00}{3.70E+16} \times \begin{vmatrix} 1.31E+14 & -1.80E+13 & 1.82E+11 \\ -2.93E+12 & 7.66E+13 & -3.07E+09 \\ 3.16E+12 & -3.66E+11 & 3.01E+11 \end{vmatrix} = \frac{1.00E+00}{3.70E+16} \times \begin{vmatrix} 1.13E+14 \\ 7.39E+13 \\ 3.09E+12 \end{vmatrix} = \begin{vmatrix} 3.05E-03 \\ 1.99E-03 \\ 8.35E-05 \end{vmatrix}$$

$$X = \begin{vmatrix} dx \\ dy \\ dz \end{vmatrix} = \begin{vmatrix} 0.00305113 \\ 0.00199419 \\ 0.00008347 \end{vmatrix}$$

Control

12,718.00	dx	+	566,176.00	dy	+	(1,060.00)dz	= 1,167.78
12718	x		0.0030511262	=	38.8042489		
566176	x		0.001994193	=	1129.06422		
−1060	x		0.0000834667	=	−0.0884746		
					1167.78	=	1167.78

III.5.3 Earthquake condition
Case – III High Water Level

Axx	dx	+	Axy	dy	+	Axz	dz	=	H
Ayx	dx	+	Ayy	dy	+	Ayz	dz	=	V
Azx	dx	+	Azy	dy	+	Azz	dz	=	M

47,561	dx	+	15,568	dy	+	(18,966)	dz	=	248.37 H
15,568	dx	+	673,467	dy	+	(1,719)	dz	=	1,222.40 V
(18,966)	dx	+	(1,719)	dy	+	1,418,463	dz	=	(746.15) M

det A

4.756E+04	673467	−1719	=
	−1719	1418463	
15568	15568	−1719	=
	−18966	1418463	
−18966	15568	673467	=
	−18966	−1719	

+	47561	x(	673467	x	1418463	−	−1719	x	−1719)	
	47561	x(	955301490561	−	−2954961	)				= 4.54E+16
−	15568	x(	15568	x	1418463	−	−18966	x	−1719)	
	15568	x(	22082943344	−	−32602554	)				= −3.43E+14
+	−18966	x(	15568	x	−1719	−	−18966	x	673467)	
	−18966	x(	−26761392	−	1.277E+10	)				= −2.42E+14
										4.48E+16

$$\frac{1}{\det} = \frac{1}{4.48E+16}$$

Kolector

a11	6.73E+05	−1.72E+03	+(	6.73E+05	x	1.42E+06	)−(−1.72E+03	x	−1.72E+03	)=	C11	
	−1.72E+03	1.42E+06	+(	9.55E+11			)−(2.95E+06	)		=	9.55E+11	
a12	1.56E+04	−1.72E+03	−(	1.56E+04	x	1.42E+06	)−(−1.90E+04	x	−1.72E+03	)=	C12	
	−1.90E+04	1.42E+06	−(	2.21E+10			)−(3.26E+07	)		=	−2.21E+10	
a13	1.56E+04	6.73E+05	+(	1.56E+04	x	−1.72E+03	)−(−1.90E+04	x	6.73E+05	)=	C13	
	−1.90E+04	−1.72E+03	+(	−2.88E+07			)−(−1.28E+10	)		=	1.27E+10	
a21	1.56E+04	−1.90E+04	−(	1.56E+04	x	1.42E+06	)−(−1.72E+03	x	−1.90E+04	)=	C21	
	−1.72E+03	1.42E+06	−(	2.21E+10			)−(3.26E+07	)		=	−2.21E+10	
a22	4.76E+04	−1.90E+04	+(	4.76E+04	x	1.42E+06	− −1.90E+04	x	−1.90E+04	)=	C22	
	−1.90E+04	1.42E+06	+(	6.75E+10			− 3.60E+06	)		=	6.71E+10	
a23	4.76E+04	1.56E+04	+(	4.76E+04	x	−1.72E+03	− −1.90E+04	x	1.56E+04	)=	C23	
	−1.90E+04	−1.72E+03	+(	−8.18E+07			− −2.95E+06	)		=	−2.14E+06	
a31	1.56E+04	−1.90E+04	+(	1.56E+04	x	−1.72E+03	− 6.73E+05	x	−1.90E+04	)=	C31	
	6.73E+05	−1.72E+03	+(	−2.88E+07			− −1.28E+10	)		=	1.27E+10	
a32	4.76E+04	−1.90E+04	−(	4.76E+04	x	−1.72E+03	− 1.56E+04	x	−1.90E+04	)=	C32	
	1.56E+04	−1.72E+03	−(	−8.18E+07			− −2.95E+06	)		=	−2.14E+06	
a33	4.76E+04	1.56E+04	+(	4.76E+04	x	6.73E+05	− 1.56E+04	x	1.56E+04	)=	C33	
	1.56E+04	6.73E+05	+(	3.20E+10			− 2.42E+06	)		=	3.18E+10	

C =

9.55E+11	−2.21E+10	1.27E+10
−2.21E+10	6.71E+10	−2.14E+06
1.27E+10	−2.14E+06	3.18E+10

Adj C = Ct =

9.55E+11	−2.21E+10	1.27E+10
−2.21E+10	6.71E+10	−2.14E+06
1.27E+10	−2.14E+06	3.18E+10

$$A^{-1} = \frac{adj\,A}{det\,A} = \frac{1}{det\,A} \times \begin{vmatrix} 9.55E+11 & -2.21E+10 & 1.27E+10 \\ -2.21E+10 & 6.71E+10 & -2.14E+06 \\ 1.27E+10 & -2.14E+06 & 3.18E+10 \end{vmatrix} = \begin{vmatrix} 2.48E+02 & 1.22E+03 \\ 2.48E+02 & 1.22E+03 \\ 2.48E+02 & 1.22E+03 \end{vmatrix} \times \begin{vmatrix} -2.21E+10 & 1.27E+10 & 2.48E+02 \\ 6.71E+10 & -2.14E+06 & 1.22E+03 \\ -2.14E+06 & 3.18E+10 & -7.46E+02 \end{vmatrix}$$

$$\begin{vmatrix} 9.55E+11 & 2.48E+02 & -2.21E+10 & 1.22E+03 & 1.27E+10 & -7.46E+02 \\ -2.21E+10 & 2.48E+02 & 6.71E+10 & 1.22E+03 & -2.14E+06 & -7.46E+02 \\ 1.27E+10 & 2.48E+02 & -2.14E+06 & 1.22E+03 & 3.18E+10 & -7.46E+02 \end{vmatrix}$$

$$X = A^{-1}.b = \frac{1.00E+00}{4.48E+16} \times \begin{vmatrix} 2.37E+14 & -2.70E+13 & -9.51E+12 \\ -5.48E+12 & 8.20E+13 & 1.59E+11 \\ 3.17E+12 & -2.61E+11 & -2.37E+13 \end{vmatrix} =$$

$$X = \frac{1.00E+00}{4.48E+16} \times \begin{vmatrix} 2.01E+14 \\ 7.87E+13 \\ -2.06E+13 \end{vmatrix} = \begin{vmatrix} 4.48E-03 \\ 1.71E-03 \\ -4.64E-04 \end{vmatrix}$$

$$X = \begin{vmatrix} dx \\ dy \\ dz \end{vmatrix} = \begin{vmatrix} 0.00447721 \\ 0.00171040 \\ (0.00046408) \end{vmatrix}$$

Control

15,568.00	dx	+	673,467.00	dy	+	(1,719.00)dz	= 1,222.40
15568	x		0.0044772105	=	69.7012127		
673467	x		0.0017104046	=	1151.90102		
−1719	x		−0.000464063	=	0.79776012		
					1222.4	=	1222.4

Project	: Medan Flood Control	Japan International Cooperation Agency (JICA)	Calculation sheet
Channel	: Medan Flood Way		Date
Structure	: Br – F1		Nos of sheet
Station	: FW 08 + 90		Prepared by

III.5.4 Earthquake condition
Case – IV Low Water Level

Axx	dx	+	Axy	dy	+	Axt	dz	=	H
Ayx	dx	+	Ayy	dy	+	Ayt	dz	=	V
Axt	dx	+	Ayt	dy	+	Att	dz	=	M

47,561	dx	+	15,568	dy	+	(18,966)dz	=	347.82	H
15,568	dx	+	673,467	dy	+	(1,719)dz	=	1,167.78	V
(18,966)dx		+	(1,719)dy		+	1,418,483 dz	=	(508.26)	M

det A

4.758E+04	673467	−1719	=
	−1719	1418483	
15568	15568	−1719	=
	−18966	1418483	
−18966	15568	673467	=
	−18966	−1719	

+	47561	x(	673467	x	1418483	−	−1719	x	−1719)	
	47561	x(	955301490561	−	−2954961	)				= 4.54E+16
−	15568	x(	15568	x	1418483	−	−18966	x	−1719)	
	15568	x(	22082943344	−	−32602554	)				= −3.43E+14
+	−18966	x(	15568	x	−1719	−	−18966	x	673467)	
	−18966	x(	−28761392	−	1.277E+10	)				= −2.42E+14
										4.48E+16

$$\frac{1}{\det} = \frac{1}{4.48E+16}$$

Kofactor

a11	6.73E+05	−1.72E+03	+	6.73E+05	x	1.42E+06	)−(	−1.72E+03	x	−1.72E+03	)=	C11
	−1.72E+03	1.42E+06	+	8.55E+11			)−(	2.95E+06	)		=	8.55E+11
a12	1.56E+04	−1.72E+03	−	1.56E+04	x	1.42E+06	)−(	−1.90E+04	x	−1.72E+03	)=	C12
	−1.90E+04	1.42E+06	−	2.21E+10			)−(	3.26E+07	)		=	−2.21E+10
a13	1.56E+04	6.73E+05	+	1.56E+04	x	−1.72E+03	)−(	−1.90E+04	x	6.73E+05	)=	C13
	−1.90E+04	−1.72E+03	+	−2.68E+07			)−(	−1.28E+10	)		=	1.27E+10
a21	1.56E+04	−1.90E+04	−	1.56E+04	x	1.42E+06	)−(	−1.72E+03	x	−1.90E+04	)=	C21
	−1.72E+03	1.42E+06	−	2.21E+10			)−(	3.26E+07	)		=	−2.21E+10
a22	4.76E+04	−1.90E+04	+	4.76E+04	x	1.42E+06	−	−1.90E+04	x	−1.90E+04	)=	C22
	−1.90E+04	1.42E+06	+	8.75E+10			−	3.60E+08	)		=	6.71E+10
a23	4.76E+04	1.56E+04	+	4.76E+04	x	−1.72E+03	−	−1.90E+04	x	1.56E+04	)=	C23
	−1.90E+04	−1.72E+03	+	−8.18E+07			−	−2.95E+06	)		=	−2.14E+08
a31	1.56E+04	−1.90E+04	+	1.56E+04	x	−1.72E+03	−	6.73E+05	x	−1.90E+04	)=	C31
	6.73E+05	−1.72E+03	+	−2.68E+07			−	−1.28E+10	)		=	1.27E+10
a32	4.76E+04	−1.90E+04	−	4.76E+04	x	−1.72E+03	−	1.56E+04	x	−1.90E+04	)=	C32
	1.56E+04	−1.72E+03	−	8.18E+07			−	−2.95E+06	)		=	−2.14E+08
a33	4.76E+04	1.56E+04	+	4.76E+04	x	6.73E+05	−	1.56E+04	x	1.56E+04	)=	C33
	1.56E+04	6.73E+05	+	3.20E+10			−	2.42E+06	)		=	3.18E+10

C =

8.55E+11	−2.21E+10	1.27E+10
−2.21E+10	6.71E+10	−2.14E+08
1.27E+10	−2.14E+08	3.18E+10

Adj C = C t =

8.55E+11	−2.21E+10	1.27E+10
−2.21E+10	6.71E+10	−2.14E+08
1.27E+10	−2.14E+08	3.18E+10

$$A^{-1} = \frac{\text{adj A}}{\det A} = \frac{1}{\det A} \times \begin{vmatrix} 8.55E+11 & -2.21E+10 & 1.27E+10 \\ -2.21E+10 & 6.71E+10 & -2.14E+08 \\ 1.27E+10 & -2.14E+08 & 3.18E+10 \end{vmatrix} = \begin{vmatrix} 3.48E+02 & -5.09E+02 \\ -5.09E+02 & 1.17E+03 \\ -5.09E+02 & -5.09E+02 \end{vmatrix}$$

$$\begin{vmatrix} 8.55E+11 & -2.21E+10 & 1.27E+10 \\ -2.21E+10 & 6.71E+10 & -2.14E+08 \\ 1.27E+10 & -2.14E+08 & 3.18E+10 \end{vmatrix} \times \begin{vmatrix} 3.48E+02 & -5.09E+02 \\ -5.09E+02 & 1.17E+03 \\ -5.09E+02 & -5.09E+02 \end{vmatrix}$$

$$X = A^{-1}.b = \frac{1}{4.48E+16} \times \begin{vmatrix} 1.00E+00 & 3.32E+14 & -2.57E+13 & -6.49E+12 \\ -7.67E+12 & 7.84E+13 & 1.09E+11 \\ 4.48E+16 & 4.43E+12 & -2.49E+11 & -1.82E+13 \end{vmatrix} = \begin{vmatrix} 1.00E+00 & 3.00E+14 \\ 7.08E+13 & -1.20E+13 \\ 4.48E+16 & \end{vmatrix} = \begin{vmatrix} 6.69E-03 \\ 1.58E-03 \\ -2.68E-04 \end{vmatrix}$$

$$X = \begin{vmatrix} dx \\ dy \\ dz \end{vmatrix} = \begin{vmatrix} 0.00668540 \\ 0.00157876 \\ (0.00026772) \end{vmatrix}$$

Control

15,568.00	dx	+	673,467.00	dy	+	(1,719.00)dz	=	1,167.78
15568	x	0.0066854017	=	104.078333				
673467	x	0.0015787581	=	1063.24148				
−1719	x	−0.0002677181	=	0.46020403				
				1167.78	=	1167.78		

det-h4

Project	: Medan Flood Control	Japan International Cooperation Agency (JICA)	Calculation sheet
Channel	: Medan Flood Way		Date
Structure	: Br – F1		Nos of sheet
Station	: FW 06 + 90		Prepared by

III.6 Force at each pile head
III.6.1 Normal condition
Case – I, High Water Level

dxi = (dx.cos e) – (dy + alpa.Xi).sin e)
dyi = (dx.sin e) + (dy + alpa.Xi)cos e)

		Row of pile (1)	(2)	(3)	(4)	total per row
	Side	L/s	L/s	R/s	R/s	
	sign	(−)	(−)	(+)	(+)	
	degree	< 0			> 0	
Xi	m	(1.875)	(0.625)	0.625	1.875	
n=nos pile/rows		7.00	7.00	7.00	7.00	
e	degree	0.00	0.00	0.00	5.71	
cos e	degree	1.000	1.000	1.000	0.995	
sin e	degree	0.000	0.000	0.000	0.099	
K1	t.m	1,914	1,914	1,914	1,914	
K2	t.m/rad	1,902	1,902	1,902	1,902	
K3	t.m/rad	1,902	1,902	1,902	1,902	
K4	t.m	3,782	3,782	3,782	3,782	
Kv	t.m	20,266	20,266	20,266	20,266	
dx	m	0.00092009	0.00092009	0.00092009	0.00092009	
dy	m	0.00213805	0.00213805	0.00213805	0.00213805	
alpa	rad	(0.00017272)	(0.00017272)	(0.00017272)	(0.00017272)	
dxi = dx cos e – (dy + alpa.Xi).sin e						
dx.cos e	=	0.00092	0.00092	0.00092	0.00092	
dy	=	0.00214	0.00214	0.00214	0.00214	
alpa	=	(0.00017)	(0.00017)	(0.00017)	(0.00017)	
Alpa x Xi	=	0.00032	0.00011	(0.00011)	(0.00032)	
dy + Alpa x Xi	=	0.00246	0.00225	0.00203	0.00181	
(dy + alpa.Xi).sin e	=	0.00000	0.00000	0.00000	0.00018	
dxi	=	0.00092	0.00092	0.00092	0.00074	
dyi = dx sin e + (dy + alpa.Xi).cos e						
dx.sin e	=	0.0000000	0.0000000	0.0000000	0.0000915	
dy	=	0.0021381	0.0021381	0.0021381	0.0021381	
alpa	=	(0.0001727)	(0.0001727)	(0.0001727)	(0.0001727)	
Alpa x Xi	=	0.0003239	0.0001080	(0.0001080)	(0.0003239)	
dy + Alpa x Xi	=	0.0024619	0.0022460	0.0020301	0.0018142	
(dy + alpa.Xi).cos e	=	0.0024619	0.0022460	0.0020301	0.0018052	
dyi	=	0.0024619	0.0022460	0.0020301	0.0018967	
P ni=Kv.dyi		49.89	45.52	41.14	38.44	
K1.dxi	=	1.76	1.76	1.76	1.41	
K2.alpa	=	(0.33)	(0.33)	(0.33)	(0.33)	
P hi=K1.dxi−K2.alpa	=	2.09	2.09	2.09	1.74	
K3.dxi	=	1.75	1.75	1.75	1.40	
K4.alpa	=	(0.65)	(0.65)	(0.65)	(0.65)	
M ti=−K3.dxi+K4.alpa	=	(2.40)	(2.40)	(2.40)	(2.05)	(9.26)
Mti x n	=	(16.82)	(16.82)	(16.82)	(14.36)	(64.83)
Vi = Pni.cos e – Phi.sin e						
Pni.cos	=	49.89	45.52	41.14	38.25	
Phi.sin e	=	0.00	0.00	0.00	0.17	
Vi	=	49.89	45.52	41.14	38.08	
Vi.n	=	349.25	318.62	287.99	266.53	1,222.40
Hi= Pni.sin e + Phi.cos e						
Pni.sin e	=	0.0	0.0	0.0	3.8	
Phi.cos e	=	2.1	2.1	2.1	1.7	
Hi	=	2.09	2.09	2.09	5.55	
Hi.n	=	14.63	14.63	14.63	38.86	82.74
Vi.n.X	=	(654.84)	(199.14)	180.00	499.75	
Mti.n	=	(16.82)	(16.82)	(16.82)	(14.36)	
Mt=Mti.n + Vi.n.X	=	(671.67)	(215.96)	163.17	485.39	(239.07)

Total forces at footing of Abutment

Ho	=	82.74	ton
Vo	=	1,222.40	ton
Mo	=	(239.07)	t.m

Total forces at pile head

Hi.n = Ho	82.74	ton
Vi.n = Vo	1,222.40	ton
Mt = Mo	(239.07)	t.m

mvh−1

Project : Medan Flood Control Channel : Medan Flood Way Structure : Br – F1 Station : FW 06 + 90	Japan International Cooperation Agency (JICA)	Calculation sheet Date Nos of sheet Prepared by

III.6.2 Normal condition
Case – II, Low Water Level

dxi = (dxi.cos e) – (dy + alpa.Xi).sin e)
dyi = (dxi.sin e) + (dy + alpa.Xi)cos e)

			Row of pile (1)	(2)	(3)	(4)	total
		Side	L/s	L/s	R/s	R/s	per
		sign	(–)	(–)	(+)	(+)	row
		degree	< 0			> 0	
Xi	m		(1.875)	(0.625)	0.625	1.875	
n=nos pile/rows			7.00	7.00	7.00	7.00	
e	degree		0.00	0.00	0.00	5.71	
cos e	degree		1.000	1.000	1.000	0.995	
sin e	degree		0.000	0.000	0.000	0.099	
Ki	t.m		1,914	1,914	1,914	1,914	
K2	t.m/rad		1,902	1,902	1,902	1,902	
K3	t.m/rad		1,902	1,902	1,902	1,902	
K4	t.m		3,782	3,782	3,782	3,782	
Kv	t.m		20,266	20,266	20,266	20,266	
dx	m		0.00305113	0.00305113	0.00305113	0.00305113	
dy	m		0.00199419	0.00199419	0.00199419	0.00199419	
alpa	rad		0.00008347	0.00008347	0.00008347	0.00008347	
dxi = dx cos e – (dy + alpa.Xi).sin e							
dx.cos e	=		0.00305	0.00305	0.00305	0.00304	
dy	=		0.00199	0.00199	0.00199	0.00199	
alpa	=		0.00008	0.00008	0.00008	0.00008	
Alpa x Xi	=		(0.00016)	(0.00005)	0.00005	0.00016	
dy + Alpa x Xi	=		0.00184	0.00194	0.00205	0.00215	
(dy + alpa.Xi).sin e	=		0.00000	0.00000	0.00000	0.00021	
dxi	=		0.00305	0.00305	0.00305	0.00282	
dyi = dx sin e + (dy + alpa.Xi).cos e							
dx.sin e	=		0.0000000	0.0000000	0.0000000	0.0003036	
dy	=		0.0019942	0.0019942	0.0019942	0.0019942	
alpa	=		0.0000835	0.0000835	0.0000835	0.0000835	
Alpa x Xi	=		(0.0001565)	(0.0000522)	0.0000522	0.0001565	
dy + Alpa x Xi	=		0.0018377	0.0019420	0.0020464	0.0021507	
(dy + alpa.Xi).cos e	=		0.0018377	0.0019420	0.0020464	0.0021400	
dyi	=		0.0018377	0.0019420	0.0020464	0.0024436	
P ni=Kv.dyi			37.24	39.36	41.47	49.52	
K1.dxi	=		5.84	5.84	5.84	5.40	
K2.alpa	=		0.16	0.16	0.16	0.16	
P hi=K1.dxi–K2.alpa	=		5.68	5.68	5.68	5.24	
K3.dxi	=		5.80	5.80	5.80	5.37	
K4.alpa	=		0.32	0.32	0.32	0.32	
M ti=–K3.dxi+K4.alpa	=		(5.49)	(5.49)	(5.49)	(5.05)	(21.51)
Mti x n	=		(38.41)	(38.41)	(38.41)	(35.36)	(150.60)
Vi = Pni.cos e – Phi.sin e							
Pni.cos	=		37.24	39.36	41.47	49.28	
Phi.sin e	=		0.00	0.00	0.00	0.52	
Vi	=		37.24	39.36	41.47	48.75	
Vi.n	=		260.70	275.50	290.30	341.28	1,167.78
Hi= Pni.sin e + Phi.cos e							
Pni.sin e	=		0.0	0.0	0.0	4.9	
Phi.cos e	=		5.7	5.7	5.7	5.2	
Hi	=		5.68	5.68	5.68	10.14	
Hi.n	=		39.77	39.77	39.77	71.01	190.31
Vi.n.X	=		(488.81)	(172.19)	181.44	639.90	
Mti.n	=		(38.41)	(38.41)	(38.41)	(35.36)	
Mt=Mti.n + Vi.n.X	=		(527.22)	(210.60)	143.02	604.54	9.74

Total forces at footing of Abutment			
Ho	=	190.31	ton
Vo	=	1,167.78	ton
Mo	=	9.74	t.m

Total forces at pile head		
Hi.n = Ho	190.31	ton
Vi.n = Vo	1,167.78	ton
Mt = Mo	9.74	t.m

mvh-2

Project : Medan Flood Control Channel : Medan Flood Way Structure : Br – F1 Station : FW 06 + 90	Japan International Cooperation Agency (JICA)	Calculation sheet Date Nos of sheet Prepared by

III.6.3 Earthquake condition
Case – III, High Water Level

dxi = (dxi.cos e) – (dy + alpa.Xi).sin e)
dyi = (dxi.sin e) + (dy + alpa.Xi)cos e)

			Row of pile (1)	(2)	(3)	(4)	total
		Side	L/s	L/s	R/s	R/s	per
		sign	(–)	(–)	(+)	(+)	row
		degree	< 0			> 0	
Xi	m		(1.875)	(0.625)	0.625	1.875	
n=nos pile/rows			7.00	7.00	7.00	7.00	
e	degree		0.00	0.00	0.00	5.71	
cos e	degree		1.000	1.000	1.000	0.995	
sin e	degree		0.000	0.000	0.000	0.099	
Ki	t.m		1,643	1,643	1,643	1,643	
K2	t.m/rad		1,722	1,722	1,722	1,722	
K3	t.m/rad		1,722	1,722	1,722	1,722	
K4	t.m		3,609	3,609	3,609	3,609	
Kv	t.m		24,108	24,108	24,108	24,108	
dx	m		0.00447721	0.00447721	0.00447721	0.00447721	
dy	m		0.00171040	0.00171040	0.00171040	0.00171040	
alpa	rad		(0.00046408)	(0.00046408)	(0.00046408)	(0.00046408)	
dxi = dx cos e – (dy + alpa.Xi).sin e							
dx.cos e	=		0.00448	0.00448	0.00448	0.00445	
dy	=		0.00171	0.00171	0.00171	0.00171	
alpa	=		(0.00046)	(0.00046)	(0.00046)	(0.00046)	
Alpa x Xi	=		0.00087	0.00029	(0.00029)	(0.00087)	
dy + Alpa x Xi	=		0.00258	0.00200	0.00142	0.00084	
(dy + alpa.Xi).sin e	=		0.00000	0.00000	0.00000	0.00008	
dxi	=		0.00448	0.00448	0.00448	0.00437	
dyi = dx sin e + (dy + alpa.Xi).cos e							
dx.sin e	=		0.0000000	0.0000000	0.0000000	0.0004455	
dy	=		0.0017104	0.0017104	0.0017104	0.0017104	
alpa	=		(0.0004641)	(0.0004641)	(0.0004641)	(0.0004641)	
Alpa x Xi	=		0.0008702	0.0002901	(0.0002901)	(0.0008702)	
dy + Alpa x Xi	=		0.0025806	0.0020005	0.0014204	0.0008403	
(dy + alpa.Xi).cos e	=		0.0025806	0.0020005	0.0014204	0.0008361	
dyi	=		0.0025806	0.0020005	0.0014204	0.0012815	
P ni=Kv.dyi			62.21	48.23	34.24	30.90	
K1.dxi	=		7.36	7.36	7.36	7.18	
K2.alpa	=		(0.80)	(0.80)	(0.80)	(0.80)	
P hi=K1.dxi–K2.alpa	=		8.16	8.16	8.16	7.98	
K3.dxi	=		7.71	7.71	7.71	7.53	
K4.alpa	=		(1.67)	(1.67)	(1.67)	(1.67)	
M ti=–K3.dxi+K4.alpa	=		(9.38)	(9.38)	(9.38)	(9.20)	(37.36)
Mti x n	=		(65.69)	(65.69)	(65.69)	(64.42)	(261.49)
Vi = Pni.cos e – Phi.sin e							
Pni.cos	=		62.21	48.23	34.24	30.74	
Phi.sin e	=		0.00	0.00	0.00	0.79	
Vi	=		62.21	48.23	34.24	29.95	
Vi.n	=		435.48	337.59	239.69	209.63	1,222.40
Hi= Pni.sin e + Phi.cos e							
Pni.sin e	=		0.0	0.0	0.0	3.1	
Phi.cos e	=		8.2	8.2	8.2	7.9	
Hi	=		8.16	8.16	8.16	11.02	
Hi.n	=		57.09	57.09	57.09	77.11	248.37
Vi.n.X	=		(816.53)	(210.99)	149.81	393.07	
Mti.n	=		(65.69)	(65.69)	(65.69)	(64.42)	
Mt=Mti.n + Vi.n.X	=		(882.22)	(276.68)	84.12	328.65	(746.14)

Total forces at footing of Abutment			
Ho	=	248.37	ton
Vo	=	1,222.40	ton
Mo	=	(746.14)	t.m

Total forces at pile head		
Hi.n = Ho	248.37	ton
Vi.n = Vo	1,222.40	ton
Mt = Mo	(746.14)	t.m

mvh-3

Project : Medan Flood Control	Japan International Cooperation Agency (JICA)	Calculation sheet	
Channel : Medan Flood Way		Date	
Structure : Br – F1		Nos of sheet	
Station : FW 06 + 90		Prepared by	

III.6.4 Earthquake condition
Case – IV , Low Water Level

dxi = (dxi.cos ø) – (dy + alpa.Xi).sin ø)
dyi = (dxi.sin ø) + (dy + alpa.Xi)cos ø)

			Row of pile (1)	(2)	(3)	(4)	total per row
		Side	L/s	L/s	R/s	R/s	
		sign	(–)	(–)	(+)	(+)	
		degree	< 0			> 0	
Xi	m		(1.875)	(0.625)	0.625	1.875	
n=nos pile/rows			7.00	7.00	7.00	7.00	
ø	degree		0.00	0.00	0.00	5.71	
cos ø	degree		1.000	1.000	1.000	0.995	
sin ø	degree		0.000	0.000	0.000	0.099	
K1	t.m		1,643	1,643	1,643	1,643	
K2	t.m/rad		1,722	1,722	1,722	1,722	
K3	t.m/rad		1,722	1,722	1,722	1,722	
K4	t.m		3,609	3,609	3,609	3,609	
Kv	t.m		24,108	24,108	24,108	24,108	
dx	m		0.00668540	0.00668540	0.00668540	0.00668540	
dy	m		0.00157876	0.00157876	0.00157876	0.00157876	
alpa	rad		(0.00026772)	(0.00026772)	(0.00026772)	(0.00026772)	
dxi = dx cos ø – (dy + alpa.Xi).sin ø							
dx.cos ø	=		0.00669	0.00669	0.00669	0.00665	
dy	=		0.00158	0.00158	0.00158	0.00158	
alpa	=		(0.00027)	(0.00027)	(0.00027)	(0.00027)	
Alpa x Xi	=		0.00050	0.00017	(0.00017)	(0.00050)	
dy + Alpa x Xi	=		0.00208	0.00175	0.00141	0.00108	
(dy + alpa.Xi).sin ø	=		0.00000	0.00000	0.00000	0.00011	
dxi	=		0.00669	0.00669	0.00669	0.00655	
dyi = dx sin ø + (dy + alpa.Xi).cos ø							
dx.sin ø	=		0.0000000	0.0000000	0.0000000	0.0006652	
dy	=		0.0015788	0.0015788	0.0015788	0.0015788	
alpa	=		(0.0002677)	(0.0002677)	(0.0002677)	(0.0002677)	
Alpa x Xi	=		0.0005020	0.0001673	(0.0001673)	(0.0005020)	
dy + Alpa x Xi	=		0.0020807	0.0017461	0.0014114	0.0010768	
(dy + alpa.Xi).cos ø	=		0.0020807	0.0017461	0.0014114	0.0010714	
dyi	=		0.0020807	0.0017461	0.0014114	0.0017366	
P ni=Kv.dyi			50.16	42.09	34.03	41.87	
K1.dxi	=		10.98	10.98	10.98	10.75	
K2.alpa	=		(0.46)	(0.46)	(0.46)	(0.46)	
P hi=K1.dxi–K2.alpa	=		11.45	11.45	11.45	11.21	
K3.dxi	=		11.51	11.51	11.51	11.27	
K4.alpa	=		(0.97)	(0.97)	(0.97)	(0.97)	
M ti=–K3.dxi+K4.alpa	=		(12.48)	(12.48)	(12.48)	(12.24)	(49.67)
Mti x n	=		(87.35)	(87.35)	(87.35)	(85.66)	(347.71)
Vi = Pni.cos ø – Phi.sin ø							
Pni.cos	=		50.16	42.09	34.03	41.66	
Phi.sin ø	=		0.00	0.00	0.00	1.12	
Vi	=		50.16	42.09	34.03	40.54	
Vi.n	=		351.14	294.66	238.19	283.80	1,167.78
Hi= Pni.sin ø + Phi.cos ø							
Pni.sin ø	=		0.0	0.0	0.0	4.2	
Phi.cos ø	=		11.4	11.4	11.4	11.2	
Hi	=		11.45	11.45	11.45	15.32	
Hi.n	=		80.12	80.12	80.12	107.27	347.62
Vi.n.X	=		(658.38)	(184.16)	148.87	532.12	
Mti.n	=		(87.35)	(87.35)	(87.35)	(85.66)	
Mt=Mti.n + Vi.n.X	=		(745.73)	(271.51)	61.52	446.46	(509.26)

Total forces at footing of Abutment			
Ho	=	347.62	ton
Vo	=	1,167.78	ton
Mo	=	(509.26)	t.m

Total forces at pile head		
Hi.n = Ho	347.62	ton
Vi.n = Vo	1,167.78	ton
Mt = Mo	(509.26)	t.m

mvh–4

Project : Medan Flood Control	Japan International Cooperation Agency (JICA)	Calculation sheet	
Channel : Medan Floodway		Date	
Structure : Br. Mf1		Nos of sheet	
Station : Fw 06 + 90		Prepared by	

III.7 Control stresses on pile
III.7.1 Normal Condition
Case – I High Water Level

Depth embedded of pile = 16.00 m

Axial load Vi = 49.890 ton
= 49,890 kg

Moment Mi = 2.400 t.m
= 240,000 kg.cm

diameter do = 40.00 cm
outer radius ro = 20.00 cm

M' = Mx + Vi x ro
= 240,000 + 49,890 x 20.00
= 240,000 + 997,800
= 1,237,800 kg.cm

excentrisitas $e = \frac{Mx}{Vi}$

$= \frac{240,000 \text{ kg.cm}}{49,890 \text{ kg}}$

= 4.81 cm

concrete covering a' = 2.50 cm

t = 1.03 cm

Inner diameter di = 40.00 – 2.06
= 37.94

inner radius ri = 18.97 cm

ro^2 = 400.00
ri^2 = 359.86
ro^2–ri^2 = 400.00 – 359.86
ro^2–ri^2 = 40.14 cm2

area of steel bar
As = 8 ø 16 – – Ø 16
8.00 x 2.0106 = 16.08 cm2

As = 16.08 cm2

$Ys = \frac{\text{Area of bar.Y bar}}{\text{Area of bar}}$

$= \frac{16.08 \times 18.97}{16.08}$

$= \frac{305.13}{16.08} = 18.97$ cm

$n = \frac{1,897,200}{257,495}$

= 7.37

teg–n

$$p = \frac{\text{tot.Area of steel bar}}{@pi.ro\hat{}2}$$

$$= \frac{16.08}{3.14 \times 400.00}$$

$$= \frac{16.08}{1,256.64}$$

p = 0.01280

n.p = 7.37 x 0.01280

= 1.54810

$$alpa = \frac{ri}{ro} = \frac{18.97}{20.00} = 0.95$$

e = 4.81 cm

$$\frac{e}{ro} = \frac{4.81}{20.00} = 0.2405$$

$$\frac{e}{ro} = \frac{pi/4 - (5/12 - 1/6.\cos\hat{}2\,pi)\sin pi.\cos pi + (n.@pi.p)/2.(ri/ro)\hat{}2}{\sin pi/3.(2 + \cos\hat{}2\,pi) - pi.\cos pi - n.@pi.p\cos pi}$$

trial value of pi ---->>>>

pi	=	178.1261 degree
pi	=	3.1089 rad.

e = pi/4 − (5/12 − 1/6.cos^2 pi)sin pi.cos pi + (n.@pi.p)/2.(alpa)^2

pi/4 = A	=	3.1089	:	4.00	=	0.78	
n	=	7.37					
alpa	=	0.95 cm					
alpa^2	=	0.90 cm^2					
cos pi	=	(0.999465)					
Sin pi	=	0.032700					
Cos^2 pi	=	0.998931					
1/6.cos^2 pi	=	0.166667	x	0.998931	=	0.16649	
(5/12 − 1/6.cos^2 pi)	=	0.416667	−	0.166488	=	0.250178	
Sin pi cos pi	=	0.032700	x	(0.999465)	=	(0.03)	
(5/12 − 1/6.cos^2 pi) x sin pi.cos pi = B	=	0.25018	x	(0.99947)			= (0.25004)
(n.@pi.p)	=	1.55	x	3.14	=	4.86	
(n.@pi.p)/2	=	4.86	:	2.00	=	2.43	
(n.@pi.p)/2 x (alpa)^2 = C	=	2.43	x	0.90			= 2.19
sum A − B + C	=	0.78	−	(0.25)	+	2.19	= 3.21

ro = sin pi/3.(2 + cos^2 pi) − pi.cos pi − n.@pi.p cos pi

(Sin pi)/3	=	0.011					
(2 + cos^2 pi)	=	2.000	+	0.999	=	2.999	
sin ø /3 x (2 + cos^2 pi)	=	0.011	x	2.999			= 0.033
pi.cos pi	=	3.109	x	(0.999)			= (3.107)
n.@pi.p	=	1.548	x	3.142	=	4.864	
n.@pi.p cos pi	=	4.864	x	(0.999)			= (4.861)
							= 8.001

$$\frac{e}{ro} = \frac{3.21}{8.00}$$

pi = 178.13 rad

$$\frac{e}{ro} = 0.4018 \qquad \frac{e}{ro} = 0.2405$$

teg−n

4 - 323

$$C = \frac{1 - \cos pi}{2\sin\hat{}3\,pi/3 - pi\cos pi + \sin pi\cos\hat{}2\,pi + pi/4 - \sin pi.\cos pi/4 - \sin\hat{}3\,pi.\cos pi/6\ @pi.np.(alpa\hat{}2/2 - \cos pi)}$$

Cos pi	=	(0.999)					
sin pi	=	0.033					
sin^3 pi	=	0.000					
sin pi.cos pi	=	0.033	x	(0.999)	=	(0.033)	
Cos ^ 2pi	=	0.999					
1 − cos pi	=	1.000	−	(0.999)	=	1.999	
2.sin^3 pi	=	2.000	x	0.000	=	0.000	
2.sin^3 pi/3 = A	=	0.000	:	3.000		=	0.000
pi.cos pi = B	=	3.109	x	(0.999)		=	(3.107)
sin pi.cos^2 pi = C	=	0.033	x	0.999		=	0.033
pi/4 = D	=	0.777				=	0.777
Cos pi/4	=	(0.999)	:	4.000	=	(0.250)	
sin pi.cos pi/4 = E	=	0.033	x	(0.250)		=	(0.008)
(sin^3 pi.cos pi)	=	0.000	x	(0.999)	=	(0.000)	
(sin^3 pi.cos pi)/6 = F	=	(0.000)	:	6.000		=	(0.000)
n.p	=	1.548					
@pi.np	=	3.142	x	1.548	=	4.864	
alpa	=	0.948					
alpa^2	=	0.900					

0.00

alpa^2/2	=	0.900	:	2.000	=	0.450	
alpa^2/2 − cos pi	=	0.450	−	(0.999)	=	1.449	
@pi.np x alpa^2/2	=	4.864	x	0.450	=	2.188	
@pi.np x alpa^2/2 − cos ø = G	=	2.188	−	(0.999)		=	3.187
sum = A − B + C + D − E − F + G						=	7.113

$$C = \frac{1 - \cos pi}{2\sin\hat{}3\,pi/3 - pi\cos pi + \sin pi\cos\hat{}2\,pi + pi/4 - \sin pi.\cos pi/4 - \sin\hat{}3\,pi.\cos pi/6\ @pi.np.(alpa\hat{}2/2 - \cos pi)}$$

$$C = \frac{1.999465}{7.113} = 0.28112$$

$$S = C \times \frac{alpa + \cos pi}{1 - \cos pi}$$

$$= 0.281 \times \frac{0.948 + (0.999)}{1.999}$$

$$= 0.281 \times (0.025)$$

$$= (0.007)$$

M' = 1,237,800 kg.cm

ro = 20.000 cm

stres on concrete = fc

$$fc = \frac{M'}{ro\hat{}3} \times C$$

$$= \frac{1,237,800}{8,000} \times 0.281$$

$$= 154.725 \times 0.281$$

$$= \frac{43.50}{(8)} \text{ kg/cm2} > 170 \text{ kg/cm2}$$

stres on steel = fs

$$fs = \frac{M'}{ro\hat{}3} \times S \times n$$

$$= \frac{1,237,800}{8,000} \times (0.007) \times 7 \text{ kg/cm2}$$

$$= 154.725 \times (0.007) \times 7 \text{ kg/cm2}$$

$$= (8) \text{kg/cm2}$$

teg−n

Project	: Medan Flood Control	Japan International Cooperation Agency (JICA)	Calculation sheet	
Channel	: Medan Floodway		Date	
Structure	: Br. Mf1		Nos of sheet	
Station	: Fw 06 + 90		Prepared by	

III.7 Control stresses on pile
III.7.2 Earthquake Condition
Case – III High Water Level

Depth embedded of pile = 16.00 m

Axial load Vi = 62.210 ton = 62,210 kg

Moment Mi = 9.380 t.m = 938,000 kg.cm

diameter do = 40.00 cm
outer radius ro = 20.00 cm

M' = Mx + Vi x ro
= 938,000 + 62,210 x 20.00
= 938,000 + 1,244,200
= 2,182,200 kg.cm

excentrisitas $e = \frac{Mx}{Vi}$

$= \frac{938,000 \text{ kg.cm}}{62,210 \text{ kg}}$

= 15.08 cm

concrete covering s' = 2.50 cm

t = 1.03 cm

Inner diameter di = 40.00 – 2.06
= 37.94
inner radius ri = 18.97 cm

ro^2 = 400.00
ri^2 = 359.86
ro^2–ri^2 = 400.00 – 359.86
ro^2–ri^2 = 40.14 cm2

area of steel bar
As = 8 ø 16 --Ø 16
8.00 x 2.0106 = 16.08 cm2

As = 16.08 cm2

Ys = Area of bar.Y bar / Area of bar

$= \frac{16.08 \times 18.97}{16.08}$

$= \frac{305.13}{16.08} = 18.97$ cm

$n = \frac{1,897,200}{257,495}$

= 7.37

p = tot.A rea of steel bar / @pi.ro^2

$= \frac{16.08}{3.14 \times 400.00}$

$= \frac{16.08}{1,256.64}$

p = 0.01280

n.p = 7.37 x 0.01280

= 1.54810

alpa = ri/ro = 18.97/20.00 = 0.95

e = 15.08 cm

e/ro = 15.08/20.00 = 0.7539

$\frac{e}{ro} = \frac{pi/4 - (5/12 - 1/6.\cos^2 pi)\sin pi.\cos pi + (n.@pi.p)/2.(ri/ro)^2}{\sin pi/3.(2 + \cos^2 pi) - pi.\cos pi - n.@pi.p \cos pi}$

trial value of pi ---->>>> pi = 234.9261 degree
pi = 4.1002 rad.

e = pi/4 – (5/12 – 1/6.cos^2 pi)sin pi.cos pi + (n.@pi.p)/2.(alpa)^2

pi/4 = A	=	4.1002	:	4.00	=	1.03
n	=	7.37				
alpa	=	0.95 cm				
alpa^2	=	0.90 cm^2				
cos pi	=	(0.574632)				
Sin pi	=	(0.818412)				
Cos^2 pi	=	0.330202				
1/6.cos^2 pi	=	0.166667	x	0.330202	=	0.05503
(5/12 – 1/6.cos^2 pi)	=	0.416667	–	0.055034	=	0.361633
Sin pi cos pi	=	(0.818412)	x	(0.574632)	=	0.47
(5/12 – 1/6.cos^2 pi) x sin pi.cos pi = B	=	0.36163	x	(0.57463)	=	(0.20781)
(n.@pi.p)	=	1.55	x	3.14	=	4.86
(n.@pi.p)/2	=	4.86	:	2.00	=	2.43
(n.@pi.p)/2 x (alpa)^2 = C	=	2.43	x	0.90	=	2.19
sum A – B + C	=	1.03	–	(0.21) +	2.19	= 3.42

ro = sin pi/3.(2 + cos^2 pi)–pi.cos pi – n.@pi.p cos pi

(Sin pi)3	=	(0.273)				
(2 + cos^2 pi)	=	2.000	+	0.330	=	2.330
sin ø /3 x (2 + cos^2 pi)	=	(0.273)	x	2.330	=	(0.636)
pi.cos pi	=	4.100	x	(0.575)	=	(2.356)
n.@pi.p	=	1.548	x	3.142	=	4.864
n.@pi.p cos pi	=	4.864	x	(0.575)	=	(2.795)
					=	4.515

e/ro = 3.42/4.52 pi = 234.93 rad

e/ro = 0.7576 e/ro = 0.7539

$$C = \frac{1 - \cos pi}{2\sin^3 pi/3 - pi\cos pi + \sin pi\cos^2 pi + pi/4 - \sin pi.\cos pi/4 - \sin^3 3.pi.\cos pi/6 \;@pi.np.(alpa^2/2 - \cos pi)}$$

Cos pi	=	(0.575)					
sin pi	=	(0.818)					
sin^3 pi	=	(0.548)					
sin pi.cos pi	=	(0.818)	x	(0.575)	=	0.470	
Cos ^ 2pi	=	0.330					
1 − cos pi	=	1.000	−	(0.575)	=	1.575	
2.sin^3 pi	=	2.000	x	(0.548)	=	(1.096)	
2.sin^3 pi/3 = A	=	(1.096)	:	3.000	=		(0.365)
pi.cos pi = B	=	4.100	x	(0.575)	=		(2.356)
sin pi.cos^2 pi = C	=	(0.818)	x	0.330	=		(0.270)
pi/4 = D	=	1.025			=		1.025
Cos pi/4	=	(0.575)	:	4.000	=	(0.144)	
sin pi.cos pi/4 = E	=	(0.818)	x	(0.144)	=		0.118
(sin^3 pi.cos pi)	=	(0.548)	x	(0.575)	=	0.315	
(sin^3 pi.cos pi)/6 = F	=	0.315	:	6.000	=		0.052
n.p	=	1.548					
@pi.np	=	3.142	x	1.548	=	4.864	
alpa	=	0.948					
alpa^2	=	0.900					
0.00							
alpa^2/2	=	0.900	:	2.000	=	0.450	
alpa^2/2−cos pi	=	0.450	−	(0.575)	=	1.024	
@pi.np x alpa^2/2	=	4.864	x	0.450	=	2.188	
@pi.np x alpa^2/2−cos pi = G	=	2.188	−	(0.575)	=		2.762
sum = A − B + C + D − E − F + G						=	5.338

$$C = \frac{1 - \cos pi}{2\sin^3 pi/3 - pi\cos pi + \sin pi\cos^2 pi + pi/4 - \sin pi.\cos pi/4 - \sin^3 3.pi.\cos pi/6 \;@pi.np.(alpa^2/2 - \cos pi)}$$

$$C = \frac{1.574632}{5.338} = 0.29500$$

$$S = C \times \frac{alpa + \cos pi}{1 - \cos pi}$$

$$= 0.295 \times \frac{0.948 + (0.575)}{1.575}$$

$$= 0.295 \times 0.237$$

$$= 0.070$$

M' = 2,182,200 kg.cm

ro = 20.000 cm

stres on concrete = fc

$$fc = \frac{M'}{ro^3} \times C$$

$$= \frac{2,182,200}{8,000} \times 0.295$$

$$= 272.775 \times 0.295$$

$$= 80.47 \text{ kg/cm2} > 170 \text{ kg/cm2}$$

stres on steel = fs

$$fs = \frac{M'}{ro^3} \times S \times n$$

$$= \frac{2,182,200}{8,000} \times 0.070 \times 7 \text{ kg/cm2}$$

$$= 272.775 \times 0.070 \times 7 \text{ kg/cm2}$$

$$= 141 \text{ kg/cm2}$$

teg−q

Project : Medan Flood Control	Japan International Cooperation Agency (JICA)	Calculation sheet
Channel : Medan Flood Way		Date
Structure: Br − F1		Nos of sheet
Station : Fw 06 + 90		Prepared by

III.8 Combined load at Abutment section

III.8.1 Normal Condition

Case − I, High Water Level

Ka	=	0.297		Ywet	=	1.850	t/m3
Ht	=	6.500	m	Ysat	=	2.000	t/m3
Yw	=	1.000	t/m3	q	=	1.000	t/m2
Yc	=	2.400	t/m3				

Description	Total load (ton)					
	Dead load	Line load	Uniform load	Pedestrian load	Total load	Width
Total	485.31	27.27	190.60	18.60	721.78	12.00
per Abt.	242.65	13.635	95.3	9.3	360.89	
per m'	20.221	1.136	7.942	0.775	30.074	

Section 1 − 1 H1 = 1.945 m W1 = 0.300 m

Load		Description							Vo	Ho	Xo	Yo	M = Vo.Yo
		Y	x	Hn	x	Wn	=	Weight					
		m		m		t/m3		ton	ton	ton	m	m	m
C1	=			2.40	x	1.945	x	0.30 = 1.400	1.400				
		q	x	H									
Pq	=			1.00	x	1.945		= 1.945		1.945		0.973	1.892
. Pa1		0.5	x	Y	x	H1^2	x	Ka					
	=	0.5	x	1.85	x	3.78	x	0.297 = 1.039		1.039		0.648	
total									1.400	2.984			1.892

Section 2 − 2

H1	=	1.945 m	W1	=	0.30 m
H4	=	0.500 m	W4	=	0.55 m
H5	=	0.500 m	W5	=	0.55 m

Load		Description							Vo	Ho	Xo	Yo	M = Vo.Yo
		Yc	x	H	x	W	=	Weight					
		m		m		t/m3		ton	ton	ton	m	m	t.m
C1	=			2.40	x	1.945	x	0.30 = 1.400	1.400		0.150		0.210
C2	=			2.40	x	0.500	x	0.55 = 0.660	0.660		0.275		0.182
C3	=	0.5	x	2.40	x	0.500	x	0.55 = 0.330	0.330		0.275		0.091
E1	=			q	x	H	x	W					
	=			1.00	x	1.945	x	0.25 = 0.486	0.486		0.275		0.134
total									2.877				0.616

Section 3 − 3

H1	=	1.945 m	W1	=	0.300 m	H1 + H4	=	2.445 m
H2	=	0.750 m	W2	=	1.000 m	Pe	=	0.000 ton (by earthquake)
H4	=	0.500 m	W4	=	0.550 m	He=H4+H5	=	1.000 m
H5	=	0.500 m	W5	=	0.550 m			
H6	=	0.500 m	W6	=	0.200 m			
H7	=	0.250 m	W7	=	0.200 m			

mqh−1

Load		Description W								Vo	Ho	Xo	Yo	M
		Y	x	H	x	W	=	Weight						
		m		m		t/m3		ton		ton	ton	m	m	t.m
C1	=			2.40	x	1.945	x	0.30	=	1.400	1.400				
C4	=			2.40	x	0.500	x	1.00	=	1.200	1.200				
C5	=	0.5	x	2.40	x	0.500	x	0.55	=	0.330	0.330				
C2	=			2.40	x	0.750	x	0.55	=	0.990	0.990				
C6	=			2.40	x	0.500	x	0.20	=	0.240	0.240				
C7	=	0.5	x	2.40	x	0.250	x	0.20	=	0.060	0.060				
Pe									=	0		0	1.00	0.000
Pq	=			1.00	x	2.445			=	2.445		2.445	1.223	2.989
Pa	=	0.5	x	1.85	x	2.445	x	0.297	=	0.672		0.672	0.815	0.547
Rv	=									30.074	30.074			
		sum									34.295	3.117		3.536

Section 4 – 4

Top deck e	=	35.000	m				
Hwl elv.	=	30.905	m				
H back fill	=	Ht	–	H3			
	=	6.50	–	1.00	=	5.50	m
Top footin	=	35.000	–	5.500	=	29.500	m
H wet soil	=	35	–	30.905	=	4.095	m
H sat soil	=	5.50	–	4.095	=	1.405	m

H1	=	1.945	m	W1	=	0.300	m	
H2	=	3.255	m	W2	=	1.000	m	
H4	=	0.500	m	W4	=	0.550	m	
H5	=	0.500	m	W5	=	0.550	m	
H6	=	0.500	m	W6	=	0.200	m	
H7	=	0.250	m	W7	=	0.200	m	
H wet	=	4.095	:	3	+	1.405	=	2.770 m

mqh–1

Load		Description Y	x	Hn	x	Wn		Weight	Vo	Ho	Xo	Yo	M = Ho.Yo
		m		m		m		ton	ton	ton	m	m	t.m
C1	=			2.40	x	1.95	x	0.30	=	1.400	1.400				
C4	=			2.40	x	0.50	x	1.00	=	1.200	1.200				
C5	=	0.5	x	2.40	x	0.50	x	0.55	=	0.330	0.330				
C2	=			2.40	x	0.50	x	0.55	=	0.660	0.660				
C6	=			2.40	x	0.50	x	0.20	=	0.240	0.240				
C7	=	0.5	x	2.40	x	0.50	x	0.20	=	0.120	0.120				
Pe									=	0.000		0.000	3.255	0.000
Pq1	=			1.00	x	5.50			=	5.500		5.500	2.750	15.125
Pw1	=	0.5	x	1.85	x	16.769	x	0.297	=	4.607		4.607	2.770	12.761
Ps1	=	0.5	x	2.00	x	1.974	x	0.297	=	0.586		0.586	0.468	0.275
Ps2				2.00	x	1.405	x	0.297	=	0.835		0.835	0.703	0.586
Pwl	=	0.5	x	1.00	x	2.907			=	1.454		1.454	0.568	0.826
Pwr	=	0.5	x	1.00	x	1.974			=	0.987		0.987	0.468	0.462
Rv	=									30.074	30.074			
		sum									34.025	13.968		30.035

Section 5 – 5

H1	=	0.300	m	W1	=	1.80	m
H2	=	1.000	m	W2	=	1.80	m
H wet.r	=	4.095	–	1.945	=	2.15	m
H sat.r	=	1.405	m				

mqh–1

Load		Description Y	x	H	x	W	=	Weight	Vo	Ho	Xo	Yo	M = Vo.Xo
		m		m		t/m3		ton	ton	ton	m	m	t.m
C1	=	0.5	x	2.40	x	0.30	x	1.80	=	0.648	0.648		0.600		0.389
C2	=			2.40	x	1.00	x	1.80	=	4.320	4.320		0.900		3.888
El(wet)	=			1.85	x	2.15	x	1.80	=	7.159	7.159		0.900		6.444
El(sat)	=			2.00	x	1.405	x	1.80	=	5.058	5.058		0.900		4.552
Ul(up lift)	=			1.00	x	1.405	x	1.80	=	(2.529)	(2.529)		0.900		(2.276)
Rp 4									=	(38.080)	(38.080)		1.175		(44.744)
Rp 3									=	(41.140)	(41.140)		0.000		0.000
		total							=		(64.564)				(31.748)

Section 6 – 6

H 3.1	=	0.300	m	W1	=	2.30	m
H 3.2	=	1.000	m	W2	=	2.30	m
H wet	=	4.095	m				
H sat	=	1.405	m				

Load		Description Y	x	H	x	W	=	Weight	Vo	Ho	Xo	Yo	M = Vo.Xo
		m		m		t/m3		ton	ton	ton	m	m	t.m
C 3.1	=	0.5	x	2.40	x	0.300	x	2.30	=	0.828	0.828		0.767		0.635
C 3.2	=			2.40	x	1.000	x	2.30	=	5.520	5.520		1.150		6.348
El(wet)	=			1.85	x	4.095	x	2.30	=	17.424	17.424		1.150		20.038
El(sat)	=			2.00	x	1.405	x	2.30	=	6.463	6.463		1.150		7.432
Ul(up lift)	=			1.00	x	1.405	x	2.30	=	(3.232)	(3.232)		1.150		(3.716)
Rp 1									=	(49.890)	(49.890)		1.675		(83.566)
Rp 2									=	(45.520)	(45.520)		0.425		(19.346)
		total							=		(68.406)				(72.175)

mqh–1

Project : Medan Flood Control	Japan International Cooperation Agency (JICA)	Calculation sheet
Channel : Medan Flood Way		Date
Structure : Br – F1		Nos of sheet
Station : Fw 06 + 90		Prepared by

III.8 Combined load at Abutment section
III.8.2 Normal Condition
Case – II, Low Water Level

Ka	=	0.297		Ywet	=	1.850	t/m3
Ht	=	6.500	m	Ysat	=	2.000	t/m3
Yw	=	1.000	t/m3	q	=	1.000	t/m2
Yc	=	2.400	t/m3				

Description	Total load (ton) Dead load	Line load	Uniform load	Pedestrian load	Total load	Width
Total	485.31	27.27	190.60	18.60	721.78	12.00
per Abt.	242.65	13.635	95.3	9.3	360.89	
per m'	20.221	1.136	7.942	0.775	30.074	

Section 1 – 1 H1 = 1.945 m W1 = 0.300 m

Load		Description Y	x	Hn	x	Wn	=	Weight	Vo	Ho	Xo	Yo	M = Vo.Yo
		m		m		t/m3		ton	ton	ton	m	m	m
C1	=	2.40	x	1.945	x	0.30	=	1.400	1.400				
		q	x	H									
Pq	=	1.00	x	1.945			=	1.945		1.945		0.973	1.892
Pa1		0.5 x	Y	x	H1^2	x	Ka						
	=	0.5 x	1.85	x	3.78	x	0.297	= 1.039		1.039		0.648	
		total							1.400	2.984			1.892

Section 2 – 2

H1	=	1.945 m	W1	=	0.30 m
H4	=	0.500 m	W4	=	0.55 m
H5	=	0.500 m	W5	=	0.55 m

Load		Description Yc	x	H	x	W	=	Weight	Vo	Ho	Xo	Yo	M = Vo.Yo
		m		m		t/m3		ton	ton	ton	m	m	t.m
C1	=	2.40	x	1.945	x	0.30	=	1.400	1.400		0.150		0.210
C2	=	2.40	x	0.500	x	0.55	=	0.660	0.660		0.275		0.182
C3	= 0.5 x	2.40	x	0.500	x	0.55	=	0.330	0.330		0.275		0.091
E1	=	q	x	H	x	W							
	=	1.00	x	1.945	x	0.25	=	0.486	0.486		0.275		0.134
		total							2.877				0.616

Section 3 – 3

H1	= 1.945 m	W1	= 0.300 m	H1 + H4	=	2.445	m
H2	= 0.750 m	W2	= 1.000 m	Pe	=	0.000 ton (by earthquake)	
H4	= 0.500 m	W4	= 0.550 m	He=H4+H5	=	1.000	m
H5	= 0.500 m	W5	= 0.550 m				
H6	= 0.500 m	W6	= 0.200 m				
H7	= 0.250 m	W7	= 0.200 m				

mqh–2

Load		W Description Y	x	H	x	W	=	Weight	Vo	Ho	Xo	Yo	M
		m		m		t/m3		ton	ton	ton	m	m	t.m
C1	=	2.40	x	1.945	x	0.30	=	1.400	1.400				
C4	=	2.40	x	0.500	x	1.00	=	1.200	1.200				
C5	= 0.5 x	2.40	x	0.500	x	0.55	=	0.330	0.330				
C2	=	2.40	x	0.750	x	0.55	=	0.990	0.990				
C6	=	2.40	x	0.500	x	0.20	=	0.240	0.240				
C7	= 0.5 x	2.40	x	0.250	x	0.20	=	0.060	0.060				
Pe							=	0		0		1.00	0.000
Pq	=	1.00	x	2.445			=	2.445		2.445		1.223	2.989
Pa	= 0.5 x	1.85	x	2.445	x	0.297	=	0.672		0.672		0.815	0.547
Rv	=							30.074	30.074				
		sum							34.295	3.117			3.536

Section 4 – 4

Top deck el	=	35.000 m					
Lwl elv.	=	26.310 m					
H back fill	=	Ht	–	H3			
	=	6.50	–	1.00	=	5.50 m	
Top footing	=	35.000	–	5.500	=	29.500 m	
H wet soil	=	35.00	–	29.5	=	5.500 m	
H sat soil	=	5.50	–	5.5	=	0.000 m	

H1	=	1.945 m	W1	=	0.300 m		
H2	=	3.255 m	W2	=	1.000 m		
H4	=	0.500 m	W4	=	0.550 m		
H5	=	0.500 m	W5	=	0.550 m		
H6	=	0.500 m	W6	=	0.200 m		
H7	=	0.250 m	W7	=	0.200 m		
H wet	=	5.5	:	3	+	0 = 1.833	m

mqh–2

Load		Description Y	x	Hn	x	Wn	=	Weight	Vo	Ho	Xo	Yo	M = Ho.Yo
		m		m		m		ton	ton	ton	m	m	t.m
C1	=	2.40	x	1.95	x	0.30	=	1.400	1.400				
C4	=	2.40	x	0.50	x	1.00	=	1.200	1.200				
C5	= 0.5 x	2.40	x	0.50	x	0.55	=	0.330	0.330				
C2	=	2.40	x	0.50	x	0.55	=	0.660	0.660				
C6	=	2.40	x	0.50	x	0.20	=	0.240	0.240				
C7	= 0.5 x	2.40	x	0.50	x	0.20	=	0.120	0.120				
Pe							=	0.000		0.000		3.255	0.000
Pq1	=	1.00	x	5.50			=	5.500		5.500		2.750	15.125
Pw1	= 0.5 x	1.85	x	30.250	x	0.297	=	8.310		8.310		1.833	15.236
Ps1	= 0.5 x	2.00	x	0.000	x	0.297	=	0.000		0.000		0.000	0.000
Ps2		2.00	x	0	x	0.297	=	0.000		0.000		0.000	0.000
Pwl	= 0.5 x	1.00	x	0.090			=	0.045		0.045		0.100	0.005
Pwr	= 0.5 x	1.00	x	0.000			=	0.000		0.000		0.000	0.000
Rv	=							30.074	30.074				
		sum							34.025	13.855			30.365

Section 5 – 5

H1	=	0.300 m	W1	=	1.80 m	
H2	=	1.000 m	W2	=	1.80 m	
H wet.r	=	5.500	–	1.945	=	3.56 m
H sat.r	=	0.000 m				

mqh–2

Load		Description							Vo	Ho	Xo	Yo	M = Vo.Xo
		Y	x	H	x	W	=	Weight					
		m		m		t/m3		ton	ton	ton	m	m	t.m
C1	=	0.5 x	2.40	x	0.30	x	1.80	=	0.648	0.648		0.600		0.389
C2	=		2.40	x	1.00	x	1.80	=	4.320	4.320		0.900		3.888
E1(wet)	=		1.85	x	3.56	x	1.80	=	11.838	11.838		0.900		10.654
E1(sat)	=		2.00	x	0.000	x	1.80	=	0.000	0.000		0.900		0.000
U1(up lift)	=		1.00	x	0.000	x	1.80	=	0.000	0.000		0.900		0.000
Rp 4								=	(48.750)	(48.750)		1.175		(57.281)
Rp 3								=	(41.470)	(41.470)		0.000		0.000
		total						=		(73.414)				(42.350)

Section 6 – 6

H 3.1	=	0.300 m	W1	=	2.30 m
H 3.2	=	1.000 m	W2	=	2.30 m
H wet	=	5.500 m			
H sat	=	0.000 m			

Load		Description							Vo	Ho	Xo	Yo	M = Vo.Xo
		Y	x	H	x	W	=	Weight					
		m		m		t/m3		ton	ton	ton	m	m	t.m
C 3.1	=	0.5 x	2.40	x	0.300	x	2.30	=	0.828	0.828		0.767		0.635
C 3.2	=		2.40	x	1.000	x	2.30	=	5.520	5.520		1.150		6.348
E1(wet)	=		1.85	x	5.500	x	2.30	=	23.403	23.403		1.150		26.913
E1(sat)	=		2.00	x	0.000	x	2.30	=	0.000	0.000		1.150		0.000
U1(up lift)	=		1.00	x	0.000	x	2.30	=	0.000	0.000		1.150		0.000
Rp 1								=	(37.240)	(37.240)		1.675		(62.377)
Rp 2								=	(39.360)	(39.360)		0.425		(16.728)
		total						=		(46.850)				(45.209)

mqh-2

Project	: Medan Flood Control	Japan International Cooperation Agency (JICA)	Calculation sheet
Channel	: Medan Flood Way		Date
Structure	: Br – F1		Nos of sheet
Station	: Fw 06 + 90		Prepared by

III.8 Combined load at Abutment section
III.8.3 Earthquake Condition
Case –III, High Water Level

Ka	=	0.407		Ywet	=	1.850	t/m3
Ht	=	6.500	m	Ysat	=	2.000	t/m3
Yw	=	1.000	t/m3	q	=	0.500	t/m2
Yc	=	2.400	t/m3				

Description	Total load (ton)					
	Dead load	Line load	Uniform load	Pedestrian load	Total load	Width
Total	485.31	27.27	190.60	18.60	721.78	12.00
per Abt.	242.65	13.635	95.3	9.3	360.89	
per m'	20.221	1.136	7.942	0.775	30.074	

Section 1 – 1 H1 = 1.945 m W1 = 0.300 m

Load		Description							Vo	Ho	Xo	Yo	M = Vo.Yo
		Y	x	Hn	x	Wn	=	Weight					
		m		m		t/m3		ton	ton	ton	m	m	m
C1	=		2.40	x	1.945	x	0.30	=	1.400	1.400				
		q	x	H									
Pq	=		0.50	x	1.945			=	0.973		0.973		0.973	0.946
Pa1		0.5 x	Y	x	H1^2	x	Ka							
	=	0.5 x	1.85	x	3.78	x	0.407	=	1.424		1.424		0.648	
		total								1.400	2.397			0.946

Section 2 – 2

H1	=	1.945 m	W1	=	0.30 m
H4	=	0.500 m	W4	=	0.55 m
H5	=	0.500 m	W5	=	0.55 m

Load		Description							Vo	Ho	Xo	Yo	M = Vo.Yo
		Yc	x	H	x	W	=	Weight					
		m		m		t/m3		ton	ton	ton	m	m	t.m
C1	=		2.40	x	1.945	x	0.30	=	1.400	1.400		0.150		0.210
C2	=		2.40	x	0.500	x	0.55	=	0.660	0.660		0.275		0.182
C3	=	0.5 x	2.40	x	0.500	x	0.55	=	0.330	0.330		0.275		0.091
E1	=		q	x	H	x	W							
	=		0.50	x	1.945	x	0.25	=	0.243	0.243		0.275		0.067
		total								2.634				0.549

Section 3 – 3

H1	=	1.945	m	W1	=	0.300	m	H1 + H4	= 2.445 m
H2	=	0.750	m	W2	=	1.000	m	Pe	= 0.000 ton (by earthquake)
H4	=	0.500	m	W4	=	0.550	m	He=H4+H5	= 1.000 m
H5	=	0.500	m	W5	=	0.550	m		
H6	=	0.500	m	W6	=	0.200	m		
H7	=	0.250	m	W7	=	0.200	m		

mqh-3

Load		W Description Y	x	H	x	W	=	Weight	Vo	Ho	Xo	Yo	M
		m		m		t/m3		ton	ton	ton	m	m	t.m
C1	=			2.40	x	1.945	x	0.30	=	1.400	1.400				
C4	=			2.40	x	0.500	x	1.00	=	1.200	1.200				
C5	=	0.5	x	2.40	x	0.500	x	0.55	=	0.330	0.330				
C2	=			2.40	x	0.750	x	0.55	=	0.990	0.990				
C6	=			2.40	x	0.500	x	0.20	=	0.240	0.240				
C7	=	0.5	x	2.40	x	0.250	x	0.20	=	0.060	0.060				
Pe									=	3.64		3.64		1.00	3.640
Pq	=			0.50	x	2.445			=	1.223		1.223		1.223	1.495
Pa	=	0.5	x	1.85	x	2.445	x	0.407	=	0.920		0.920		0.815	0.750
Rv	=									30.074	30.074				
		sum									34.295	5.783			5.885

Section 4 – 4

Top deck el	=	35.000	m				
Hwl elv.	=	30.905	m				
H back fill	=	Ht	–	H3			
	=	6.50	–	1.00	=	5.50	m
Top footing	=	35.000	–	5.500	=	29.500	m
H wet soil	=	35.00	–	30.905	=	4.095	m
H sat soil	=	5.50	–	4.095	=	1.405	m

H1	=	1.945	m	W1	=	0.300	m
H2	=	3.255	m	W2	=	1.000	m
H4	=	0.500	m	W4	=	0.550	m
H5	=	0.500	m	W5	=	0.550	m
H6	=	0.500	m	W6	=	0.200	m
H7	=	0.250	m	W7	=	0.200	m

H wet = 4.095 : 3 + 1.405 = 2.770 m

Load		Description Y	x	Hn	x	Wn	=	Weight	Vo	Ho	Xo	Yo	M = Ho.Yo
		m		m		m		ton	ton	ton	m	m	t.m
C1	=			2.40	x	1.95	x	0.30	=	1.400	1.400				
C4	=			2.40	x	0.50	x	1.00	=	1.200	1.200				
C5	=	0.5	x	2.40	x	0.50	x	0.55	=	0.330	0.330				
C2	=			2.40	x	0.50	x	0.55	=	0.660	0.660				
C6	=			2.40	x	0.50	x	0.20	=	0.240	0.240				
C7	=	0.5	x	2.40	x	0.50	x	0.20	=	0.120	0.120				
Pe									=	3.640		3.640		3.255	11.848
Pq1	=			0.50	x	5.50			=	2.750		2.750		2.750	7.563
Pw1	=	0.5	x	1.85	x	16.769	x	0.407	=	6.313		6.313		2.770	17.487
Ps1	=	0.5	x	2.00	x	1.974	x	0.407	=	0.803		0.803		0.468	0.376
Ps2				2.00	x	1.405	x	0.407	=	1.144		1.144		0.703	0.803
Pwl	=	0.5	x	1.00	x	2.907			=	1.454		1.454		0.568	0.826
Pwr	=	0.5	x	1.00	x	1.974			=	0.987		0.987		0.468	0.462
Rv	=									30.074	30.074				
		sum									34.025	17.091			39.366

Section 5 – 5

H1	=	0.300	m	W1	=	1.80 m
H2	=	1.000	m	W2	=	1.80 m
H wet.r	=	4.095	–	1.945	=	2.15 m
H sat.r	=	1.405	m			

mqh-3

Load		Description Y	x	H	x	W	=	Weight	Vo	Ho	Xo	Yo	M = Vo.Xo
		m		m		t/m3		ton	ton	ton	m	m	t.m
C1	=	0.5	x	2.40	x	0.30	x	1.80	=	0.648	0.648		0.600		0.389
C2	=			2.40	x	1.00	x	1.80	=	4.320	4.320		0.900		3.888
El(wet)	=			1.85	x	2.15	x	1.80	=	7.159	7.159		0.900		6.444
El(sat)	=			2.00	x	1.405	x	1.80	=	5.058	5.058		0.900		4.552
Ul(up lift)	=			1.00	x	1.405	x	1.80	=	(2.529)	(2.529)		0.900		(2.276)
Rp 4									=	(29.950)	(29.950)		1.175		(35.191)
Rp 3									=	(34.240)	(34.240)		0.000		0.000
						total			=		(49.534)				(22.195)

Section 6 – 6

H 3.1	=	0.300	m	W1	=	2.30 m
H 3.2	=	1.000	m	W2	=	2.30 m
H wet	=	4.095	m			
H sat	=	1.405	m			

Load		Description Y	x	H	x	W	=	Weight	Vo	Ho	Xo	Yo	M = Vo.Xo
		m		m		t/m3		ton	ton	ton	m	m	t.m
C 3.1	=	0.5	x	2.40	x	0.300	x	2.30	=	0.828	0.828		0.767		0.635
C 3.2	=			2.40	x	1.000	x	2.30	=	5.520	5.520		1.150		6.348
El(wet)	=			1.85	x	4.095	x	2.30	=	17.424	17.424		1.150		20.038
El(sat)	=			2.00	x	1.405	x	2.30	=	6.463	6.463		1.150		7.432
Ul(up lift)	=			1.00	x	1.405	x	2.30	=	(3.232)	(3.232)		1.150		(3.716)
Rp 1									=	(48.230)	(48.230)		1.675		(80.785)
Rp 2									=	(62.210)	(62.210)		0.425		(26.439)
						total			=		(83.436)				(76.488)

0

Project : Medan Flood Control Channel : Medan Flood Way Structure : Br – F1 Station : Fw 06 + 90	Japan International Cooperation Agency (JICA)	Calculation sheet Date Nos of sheet Prepared by

III.8 Combined load at Abutment section
III.8.4 Earthquake Condition
Case – IV, Low Water Level

Ka	=	0.407		Ywet	=	1.850	t/m3
Ht	=	6.500	m	Ysat	=	2.000	t/m3
Yw	=	1.000	t/m3	q	=	0.500	t/m2
Yc	=	2.400	t/m3				

Description	Total load (ton)					
	Dead load	Line load	Uniform load	Pedestrian load	Total load	Width
Total	485.31	27.27	190.60	18.60	721.78	12.00
per Abt.	242.65	13.635	95.3	9.3	360.89	
per m'	20.221	1.136	7.942	0.775	30.074	

Section 1 – 1 H1 = 1.945 m W1 = 0.300 m

Load		Description												M = Vo.Yo
		Y	x	Hn	x	Wn	=	Weight	Vo	Ho	Xo	Yo	
		m		m		t/m3		ton	ton	ton	m	m		m
C1	=	2.40	x	1.945	x	0.30	=	1.400	1.400					
		q	x	H										
Pq	=	0.50	x	1.945			=	0.973		0.973		0.973		0.946
Pa1		0.5 x	Y	x	H1^2	x	Ka							
	=	0.5 x	1.85	x	3.78	x	0.407	=	1.424		1.424		0.648	
		total							1.400	2.397				0.946

Section 2 – 2

H1	=	1.945 m	W1	=	0.30 m
H4	=	0.500 m	W4	=	0.55 m
H5	=	0.500 m	W5	=	0.55 m

Load		Description												M = Vo.Yo
		Yc	x	H	x	W	=	Weight	Vo	Ho	Xo	Yo	
		m		m		t/m3		ton	ton	ton	m	m		t.m
C1	=	2.40	x	1.945	x	0.30	=	1.400	1.400		0.150			0.210
C2	=	2.40	x	0.500	x	0.55	=	0.660	0.660		0.275			0.182
C3	=	0.5 x	2.40	x	0.500	x	0.55	=	0.330	0.330		0.275		0.091
E1	=	q	x	H	x	W								
	=	0.50	x	1.945	x	0.25	=	0.243	0.243		0.275			0.067
		total							2.634					0.549

Section 3 – 3

H1	=	1.945 m	W1	=	0.300 m	H1 + H4	=	2.445	m
H2	=	0.750 m	W2	=	1.000 m	Pe	=	0.000	ton (by earthquake)
H4	=	0.500 m	W4	=	0.550 m	He=H4+H5	=	1.000	m
H5	=	0.500 m	W5	=	0.550 m				
H6	=	0.500 m	W6	=	0.200 m				
H7	=	0.250 m	W7	=	0.200 m				

mqh–4

Load		W		Description					Vo	Ho	Xo	Yo	M
		Y	x	H	x	W	=	Weight					
		m		m		t/m3		ton	ton	ton	m	m	t.m
C1	=	2.40	x	1.945	x	0.30	=	1.400	1.400				
C4	=	2.40	x	0.500	x	1.00	=	1.200	1.200				
C5	= 0.5 x	2.40	x	0.500	x	0.55	=	0.330	0.330				
C2	=	2.40	x	0.750	x	0.55	=	0.990	0.990				
C6	=	2.40	x	0.500	x	0.20	=	0.240	0.240				
C7	= 0.5 x	2.40	x	0.250	x	0.20	=	0.060	0.060				
Pe							=	3.64		3.64		1.00	3.640
Pq	=	0.50	x	2.445			=	1.223		1.223		1.223	1.495
Pa	= 0.5 x	1.85	x	2.445	x	0.407	=	0.920		0.920		0.815	0.750
Rv	=							30.074	30.074				
		sum							34.295	5.783			5.885

Section 4 – 4

Top deck el	=	35.000	m				
Lwl elv.	=	26.310	m				
H back fill	=	Ht	–	H3			
	=	6.50	–	1.00	=	5.50	m
Top footing	=	35.000	–	5.500	=	29.500	m
H wet soil	=	35.00	–	29.5	=	5.500	m
H sat soil	=	5.50	–	5.5	=	0.000	m

H1	=	1.945 m	W1	=	0.300 m	
H2	=	3.255 m	W2	=	1.000 m	
H4	=	0.500 m	W4	=	0.550 m	
H5	=	0.500 m	W5	=	0.550 m	
H6	=	0.500 m	W6	=	0.200 m	
H7	=	0.250 m	W7	=	0.200 m	
H wet	=	5.5 :	3 +	0	=	1.833 m

mqh–4

Load		Description							Vo	Ho	Xo	Yo	M = Ho.Yo
		Y	x	Hn	x	Wn	=	Weight					
		m		m		m		ton	ton	ton	m	m	t.m
C1	=	2.40	x	1.95	x	0.30	=	1.400	1.400				
C4	=	2.40	x	0.50	x	1.00	=	1.200	1.200				
C5	= 0.5 x	2.40	x	0.50	x	0.55	=	0.330	0.330				
C2	=	2.40	x	0.50	x	0.55	=	0.660	0.660				
C6	=	2.40	x	0.50	x	0.20	=	0.240	0.240				
C7	= 0.5 x	2.40	x	0.50	x	0.20	=	0.120	0.120				
Pe							=	3.640		3.640		3.255	11.848
Pq1	=	0.50	x	5.50			=	2.750		2.750		2.750	7.563
Pw1	= 0.5 x	1.85	x	30.250	x	0.407	=	11.388		11.388		1.833	20.879
Ps1	= 0.5 x	2.00	x	0.000	x	0.407	=	0.000		0.000		0.000	0.000
Ps2		2.00	x	0	x	0.407	=	0.000		0.000		0.000	0.000
Pwl	= 0.5 x	1.00	x	0.090			=	0.045		0.045		0.100	0.005
Pwr	= 0.5 x	1.00	x	0.000			=	0.000		0.000		0.000	0.000
Rv	=							30.074	30.074				
		sum							34.025	17.823			40.294

Section 5 – 5

H1	=	0.300 m	W1	=	1.80 m	
H2	=	1.000 m	W2	=	1.80 m	
H wet.r	=	5.500 –	1.945	=	3.56 m	
H sat.r	=	0.000 m				

mqh–4

Load		Description												M = Vo.Xo
			Y	x	H	x	W	=	Weight	Vo	Ho	Xo	Yo	
			m		m		t/m3		ton	ton	ton	m	m	t.m
C1	=	0.5	x 2.40	x	0.30	x	1.80	=	0.648	0.648		0.600		0.389
C2	=		2.40	x	1.00	x	1.80	=	4.320	4.320		0.900		3.888
E1(wet)	=		1.85	x	3.56	x	1.80	=	11.838	11.838		0.900		10.654
E1(sat)	=		2.00	x	0.000	x	1.80	=	0.000	0.000		0.900		0.000
U1(up lift)	=		1.00	x	0.000	x	1.80	=	0.000	0.000		0.900		0.000
Rp 4								=	(40.540)	(40.540)		1.175		(47.635)
Rp 3								=	(34.030)	(34.030)		0.000		0.000
			total					=		(57.764)				(32.703)

Section 6 – 6

H 3.1	=	0.300 m	W1	=	2.30 m
H 3.2	=	1.000 m	W2	=	2.30 m
H wet	=	5.500 m			
H sat	=	0.000 m			

Load		Description												M = Vo.Xo
			Y	x	H	x	W	=	Weight	Vo	Ho	Xo	Yo	
			m		m		t/m3		ton	ton	ton	m	m	t.m
C 3.1	=	0.5	x 2.40	x	0.300	x	2.30	=	0.828	0.828		0.767		0.635
C 3.2	=		2.40	x	1.000	x	2.30	=	5.520	5.520		1.150		6.348
E1(wet)	=		1.85	x	5.500	x	2.30	=	23.403	23.403		1.150		26.913
E1(sat)	=		2.00	x	0.000	x	2.30	=	0.000	0.000		1.150		0.000
U1(up lift)	=		1.00	x	0.000	x	2.30	=	0.000	0.000		1.150		0.000
Rp 1								=	(50.160)	(50.160)		1.675		(84.018)
Rp 2								=	(42.090)	(42.090)		0.425		(17.888)
			total					=		(62.500)				(68.011)

mqh–4

Project	: Medan Flood Control	Japan International Cooperation Agency (JICA)	Calculation sheet	
Channel	: Medan Floodway		Date	
Structure	: Br – Mf 1		Nos of sheet	
Station	: Fw 06 + 90		Prepared by	

III.9 Resume forces on Abutment Section

Case – I,Normal Condition (HWL)

Case	Forces	Unit	Section 1	2	3	4	5	6
Case – I	Moment	t.m	1.892	0.616	3.536	30.035	31.748	72.175
		kg.cm	189,200	61,600	353,600	3,003,500	3,174,800	7,217,500
	Shear	ton	2.984	2.9	3.117	13.968	64.564	68.406
		kg	2,984	2,877	3,117	13,968	64,564	68,406
	Normal	ton	1.400	0.0	34.295	34.025	0.0	0.0
		kg	1,400	0.0	34,295	34,025	0.0	0.0

Case – II,Normal Condition (LWL)

Case	Forces	Unit	Section 1	2	3	4	5	6
Case – II	Moment	t.m	1.892	0.616	3.536	30.365	42.35	45.209
		kg.cm	189,200	61,600	353,600	3,036,500	4,235,000	4,520,900
	Shear	ton	2.984	2.877	3.117	13.855	73.414	46.85
		kg	2,984	2,877	3,117	13,855	73,414	46,850
	Normal	ton	1.400	0	34.295	34.025	0	0
		kg	1,400	0	34,295	34,025	0	0

Case – III,Earthquake Condition (HWL)

Case	Forces	Unit	Section 1	2	3	4	5	6
Case – III	Moment	t.m	0.946	0.549	5.855	39.366	22.195	76.488
		kg.cm	94,600	54,900	585,500	3,936,600	2,219,500	7,648,800
	Shear	ton	2.397	2.634	5.783	17.09	49.534	83.436
		kg	2,397	2,634	5,783	17,091	49,534	83,436
	Normal	ton	1.400	0	34.295	34.025	0	0
		kg	1,400	0	34,295	34,025	0	0

Case – IV,Earthquake Condition (LWL)

Case	Forces	Unit	Section 1	2	3	4	5	6
Case – IV	Moment	t.m	0.946	0.549	5.885	40.294	32.703	68.011
		kg.cm	94,600	54,900	588,500	4,029,400	3,270,300	6,801,100
	Shear	ton	2.40	2.634	5.783	17.823	57.764	62.5
		kg	2,397	2,634	5,783	17,823	57,764	62,500
	Normal	ton	1.40	0	34.295	34.025	0	0
		kg	1,400	0	34,295	34,025	0	0

mnh

Project	: Medan Flood Control	Japan International Cooperation Agency (JICA)	Calculation sheet	
Channel	: Medan Floodway		Date	
Structure	: Br – Mf 1		Nos of sheet	
Station	: Fw 06 + 90		Prepared by	

III.10 Reinforcing steel bar of Abutment section

Section – 4

Item		Describtion	unit	Normal condition Calcu–lation	Earth quake condition Calcu–lation
		Allowance stresses			
	concrete compressive	fc = K – 225	kg/cm2	*75*	*75*
	steel tensile	fs	kg/cm2	*1400*	*1400*
	concrete shear	tou without r.bar	kg/cm2	*8*	*8*
		tou with r.bar	kg/cm2	*20*	*20*
	transformend	n = Es/Ec		*21*	*21*
	Moment	M	t.m	30.035	39.366
			kg.cm	3,003,500	3,936,600
	Shear	S	ton	13.968	17.09
			kg	13968	17090
	Normal	N	ton	34.025	34.025
			kg	34,025	34,025
	dimension	b	cm	*100*	*100*
		ht	cm	*100*	*100*
		d'	cm	*10*	*10*
		h	cm	*90*	*90*
		b.h	cm2	*9,000*	*9,000*
		eo1=M/N	cm	88.27	115.70
		eo2=1/30.ht,> 2 cm	cm	3.33	3.33
		used eo2	cm	2.00	2.00
		eo=eo1+eo2	cm	90.27	117.70
		eo/ht (see table)		0.90	1.18
		C		6.96	7.19
		lk	cm	325.5	325.5
		100.ht	cm	10,000	10,000
		lk/100.ht	cm	0.0326	0.0326
		(lk/100.ht)^2	cm	*0.0011*	*0.0011*
		e1=C.[lk/(100.ht)]^2.ht	cm	*0.737*	*0.762*
		e2=0.15.ht	cm	*15.00*	*15.00*
		e=eo+e1+e2	cm	*106.01*	*133.46*
		ea=e+1/2.ht–d'	cm	146.01	173.46
		M' = N.ea	kg.cm	4,968,016	5,901,945
		n.M'	kg.cm	104,328,326	123,940,837
		b.fs	kg/cm	140,000	140,000
		n.M'/(b.fs)		745.20	885.29
		@sqrt(n.M'/(b.fs))		27.30	29.75
		Ca=h /@sqrt(n.M'/b.fs) see PBI 1971 N.I–2		*3.297*	*3.025*
		n.fc		1,575	1,575
		eo = fs / (n.fc)		0.8889	0.8889
		delta		0.60	0.60
		from table fined Ca		3.309	3.033
	Calculation for reinfor–cement bar with steel full working	fine e > eo		2.030	1.857
		ø'		2.913	2.600
		ksi(j)		0.330	0.350
		zeta		0.892	0.888
		100 nw		10.23	11.72
		nw		0.1023	0.1172
		w		0.00487	0.00558
		ea/h		2.17	1.88
		from table fined i		4.58	2.310
		i.A = wbh		43.84	50.23
		A cm2		9.57	21.74
		A' =delta. cm2		26.306	30.137

A – used bar dia. 25 mm @ 12.5 cm,
Area @ bar = 4.900
nos of bar = 10
total area = 10 x 4.9
(cm2) = 49.00 cm2 > 42.26

A' – used bar dia. 25 mm @ 12.5 cm,
Area @ bar = 4.900
nos of bar = 10
total area = 10 x 4.900
(cm2) = 49.00 cm2 > 26.31

		steel bar full warking		
		n.ø		42.63
	tension of bar	fs	kg/cm2	1,400.00
	compressive concrete	fc' = fs / (n.ø)	kg/cm2	32.84
	tensile of bar	fs' = fs / ø'	kg/cm2	480.60
		7/8.b.h	cm2	7,875.00
	shear concrete	Tca = S / (7/8.b.h)	kg/cm2	1.77

Section – 5

Item		Describtion	unit	Normal condition Calcu–lation	Earth quake condition Calcu–lation
		Allowance stresses			
	concrete compressive	fc = K – 225	kg/cm2	*75*	*75*
	steel tensile	fs	kg/cm2	*1400*	*1400*
	concrete shear	tou without r.bar	kg/cm2	*8*	*8*
		tou with r.bar	kg/cm2	*20*	*20*
	transformend	n = Es/Ec		*21*	*21*
	Moment	M	t.m	31.748	72.175
			kg.cm	3,174,800	7,217,500
	Shear	S	ton	73.414	46.85
			kg	73414	46850
	dimension	b	cm	*100*	*100*
		ht	cm	*1,300*	*1,300*
		d'	cm	*10*	*10*
		h	cm	*1,290*	*1,290*
		b.h	cm2	*129,000*	*129,000*
		M	kg.cm	3,174,800	7,217,500
		n.M	kg.cm	66,670,800	151,567,500
		b.fs	kg/cm	140,000	140,000
		n.M / (b.fs)		476.22	1,082.63
		@sqrt(n.M /(b.fs))		21.82	32.90
		Ca=h /@sqrt(n.M/b.fs) see PBI 1971 N.I–2		*59.113*	*39.206*
		n.fc		1,575	1,575
		eo = fs / (n.fc)		0.8889	0.8889
		delta		1.00	1.00
		from table fined Ca		12.290	12.290
	Calculation for reinfor–cement bar with steel full working	fine e > eo		8.091	8.091
		ø'		89.000	89.000
		ksi(j)		0.110	0.110
		zeta		0.963	0.963
		100 nw		0.688	0.688
		nw		0.00688	0.00688
		w		0.00033	0.00033
		A	cm2	42.26	42.26
		A' =delta.i.A	cm2	42.26	42.26

A – used bar dia. 25 mm @ 12.5 cm,
Area @ bar = 4.900
nos of bar = 10
total area = 10 x 4.9
(cm2) = 49.00 cm2 > 42.26

A' – used bar dia. 25 mm @ 12.5 cm,
Area @ bar = 4.900
nos of bar = 10
total area = 10 x 4.900
(cm2) = 49 cm2 > 42.26

		steel bar full warking		
		n.ø		169.91
	tension of bar	fs	kg/cm2	1,400.00
	compressive concrete	fc' = fs / (n.ø)	kg/cm2	8.24
	tensile of bar	fs' = fs / ø'	kg/cm2	15.73
		7/8.b.h	cm2	112,875.00
	shear concrete	Tca = S / (7/8.b.h)	kg/cm2	0.65

bar

4.1.10 SUBSTRUCTURE (BRIDGE SPAN 25.0M)

Case-3: Bridge Width = 7.0 m

Project	: Medan Flood Control	Japan International Cooperation Agency (JICA)
Channel	: Percut River	
Structure	: Br – P1	
Station	: 05 + 705	

CONTENT

I. SUPERSTRUCTURE

I.1 Post railing
- I.1.1 Moment,shear and reinforcing bar

I.2 Side walks
- I.2.1 Moment and shear
- I.2.2 Reinforcing bar

I.3 Slab deck
- I.3.1 Moment and shear
- I.3.2 Reinforcing bar

I.4 Beam

Span 25.00 m
- I.4.1 Section properties of beam
- I.4.2 Loading on a beam
- I.4.3 Prestress force and number of tendon avaiable
- I.4.4 Prestress loss
- I.4.5 Centre gravity of tandom
- I.4.6 Layout of tendons
- I.4.7 Stresses control
- I.4.8 Deflection
- I.4.9 Shear force and tensile stress
- I.4.10 Load of superstructure

Span 31.00 m
- I.4.11 Section properties of beam
- I.4.12 Loading on a beam
- I.4.13 Prestress force and number of tendon avaiable
- I.4.14 Prestress loss
- I.4.15 Centre gravity of tandom
- I.4.16 Layout of tendons
- I.4.17 Stresses control
- I.4.18 Deflection
- I.4.19 Shear force and tensile stress
- I.4.20 Load of superstructure

II. SUB STRUCTURE

II.1 Abutment

II.1.1 Neutral axis of Abutment
II.1.2 Axial forces on Abutment
II.1.3 Coulumb coefficient
II.1.4 Earthquake coefficient
II.1.5 Horizontal force
- II.1.5.1 Case–I, Normal condition HWL
- II.1.5.2 Case–II, Normal condition LWL
- II.1.5.3 Case–III, Earth Quake Condition HWL
- II.1.5.4 Case–IV, Earth Quake Condition LWL

II.1.6 Combined Load on abutment
- II.1.6.1 Case–I, Normal condition HWL
- II.1.6.2 Case–II, Normal condition LWL
- II.1.6.3 Case–III, Earth Quake Condition HWL
- II.1.6.4 Case–IV, Earth Quake Condition LWL

III. FOUNDATION

III.1 Pile for Abutment
- III.1.1 Charateristic of pile
  - III.1.1.1 Case – I,Normal condition
  - III.1.1.2 Case – II,Earthquake condition
- III.1.2 Axial bearing load allowance for a pile
- III.1.3 Spring constant of a pile
  - III.1.3.1 Case – I, Normal Condition
  - III.1.3.2 Case – II Earth Quake Condition
- III.1.4 Coeficient displacement of footing
  - III.1.4.1 Case – I, Normal Condition
  - III.1.4.2 Case – II Earth Quake Condition
- III.1.5 Displacement of a head pile
  - III.1.5.1 Case–I, Normal Condition HWL
  - III.1.5.2 Case–II, Normal Condition LWL
  - III.1.5.3 Case–III, Earth Quake Condition HWL
  - III.1.5.4 Case–IV, Earth Quake Condition LWL
- III.1.6 Forces at the i–th pile head
  - III.1.6.1 Case–I, Normal Condition HWL
  - III.1.6.2 Case–II, Normal Condition LWL
  - III.1.6.3 Case–III, Earth Quake Condition HWL
  - III.1.6.4 Case–IV, Earth Quake Condition LWL
- III.1.7 Control stresses on a head pile
  - III.1.7.1 Case–II, Normal condition LWL
  - III.1.7.2 Case–IV,Earth quake condition LWL
- III.1.8 Combined load at Abutment section
  - III.1.8.1 Case–I, Normal condition LWL
  - III.1.8.2 Case–II, Normal condition HWL
  - III.1.8.3 Case–III, Earthquake condition LWL
  - III.1.8.4 Case–IV,Earth quake condition HWL

III.2 Pile for Pier
- III.2.1 Charateristic of pile
  - III.2.1.1 Case – I,Normal condition
  - III.2.1.2 Case – II,Earthquake condition
- III.2.1 Axial bearing load allowance for a pile
- III.2.3 Spring constant of a pile
  - III.2.3.1 Case – I, Normal Condition
  - III.2.3.2 Case – II Earth Quake Condition
- III.2.4 Coeficient displacement of footing
  - III.2.4.1 Case – I, Normal Condition
  - III.2.4.2 Case – II Earth Quake Condition
- III.2.5 Displacement of a head pile
  - III.2.5.1 Case–I, Normal Condition HWL
  - III.2.5.2 Case–II, Normal Condition LWL
  - III.2.5.3 Case–III, Earth Quake Condition HWL
  - III.2.5.4 Case–IV, Earth Quake Condition LWL
- III.2.6 Forces at the i–th pile head
  - III.2.6.1 Case–I, Normal Condition HWL
  - III.2.6.2 Case–II, Normal Condition LWL
  - III.2.6.3 Case–III, Earth Quake Condition HWL
  - III.2.6.4 Case–IV, Earth Quake Condition LWL
- III.2.7 Control stresses on a head pile
  - III.2.7.1 Case–II, Normal condition LWL
  - III.2.7.2 Case–IV,Earth quake condition LWL

Project	: Medan Flood Control	Japan International Cooperation Agency (JICA)
Channel	: Percut River	
Structure	: Br – P1	
Station	: 05 + 705	

Project	: Me anFloo Control	Japan International Cooperation Agency (JICA)	Calculation sheet	
Channel	: Percut River		Date	
Structure	: Br. P−1		Nos of sheet	
Station	: PE 57 +05 m		Prepare by	

II.1 ABUTMENT
II.1.1 Neutral axis of Left Si eAbutment

A8	W8	=	2.300	X8 =	W8/3	+	Wf2	+	Wf3				
					0.767	+	1.000	+	1.800	=	3.567	m	
	H8	=	0.300	Y8=	H8/3	+	H3						
					0.100	+	1.000			=	1.100	m	
A9	W9	=	1.800	X9 =	W9x2/3								
					1.200					=	1.200	m	
	H9	=	0.300	Y9=	H9/3	+	H3						
					0.100	+	1.000			=	1.100	m	

Wing wall

Hgw	=	1.200	m	H back fill	=	5.30	m
Ww1	=	3.00	m	Hw1	=	3.00	m
Ww2	=	2.30	m	Hw2	=	1.00	m
Ww3	=	0.70	m	Hw3	=	1.00	m
Ww4	=	2.30	m	Hw4	=	1.00	m
Ww5	=	2.30	m	Hw5	=	0.30	m

Ww1	Ww1	=	3.000	Xw1=	Ww1/2	+	W2	+	Wf3				
					1.500	+	1.000	+	1.800	=	4.300	m	
	Hw1	=	3.000	Yw1=	Ht	−	Hw1/2						
					6.300	−	1.500			=	4.800	m	
Ww2	Ww2	=	2.300	Xw2=	Ww2/2	+	W2	+	Wf3				
					1.150	+	1.000	+	1.800	=	3.950	m	
	Hw2	=	1.000	Yw2=	Ht	−	Hw1	−	Hw2/2				
					6.300	−	3.000	−	0.500	=	2.800	m	
Ww3	Ww3	=	0.700	Xw3=	W3	−	Ww3/2						
					5.100	−	0.350			=	4.750	m	
	Hw3	=	1.000	Yw3=	Ht	−	Hw1	−	Hw3/2				
					6.300	−	3.000	−	0.333	=	2.967	m	
Ww4	Ww4	=	2.300	Xw4=	Ww4/2	+	W2	+	Wf3				
					1.150	+	1.000	+	1.800	=	3.950	m	
	Hw4	=	1.000	Yw4=	Hw4/2	+	Hw5	+	H3				
					0.500	+	0.300	+	1.000	=	1.800	m	
Ww5	Ww5	=	2.300	Xw5=	W3	−	Ww5x2/3						
					5.100	−	1.533			=	3.567	m	
	Hw5	=	0.300	Yw5=	Hw5/3	+	H3						
					0.100	+	1.000			=	1.100	m	

Approach slab

Apr	Wapr	=	3.000	Xapr=	Wapr/2	+	W2	+	Wf3				
					1.500	+	1.000	+	1.800	=	4.300	m	
	Hapr	=	0.200	Yapr=	Ht	−	H1	+	Hapr/2				
					6.300	−	1.595	+	0.100	=	4.805	m	

Guide wall

Gw	Wgw	=	3.000	Xgw=	Wgw/2	+	W2	+	Wf3				
					1.500	+	1.000	+	1.800	=	4.300	m	
	Hgw	=	1.200	Ygw=	Ht	+	Hgw/2						
					6.300	+	0.600			=	6.900	m	

Project	: Me anFloo Control	Japan International Cooperation Agency (JICA)	Calculation sheet	
Channel	: Percut River		Date	
Structure	: Br. P−1		Nos of sheet	
Station	: PE 57 +05 m		Prepare by	

II.1 ABUTMENT
II.1.1 Neutral axis of Left Si eAbutment

depth of abutment = Ht		=	6.30	m									
depth beam		=	1.25	m									
depth slab		=	0.245	m									
depth of beam to deck		=	1.495	m									
depth of beam and deck		=	1.25	+	0.245	=	1.495	m					
depth bearing pad						=	0.10	m					
depth back wall		=	1.495	+	0.1	=	1.595	m					
depth of footing		=	1.00	m									
depth of steam		=	6.3	−	1.595	−	1.00	=	3.705	m			
	H1	=	1.595	m	W1	=	0.300	m					
	H2	=	3.705	m	Wf1	=	2.300	m					
	H3	=	1.000	m	Wf2	=	1.000	m					
	Ht	=	6.300	m	Wf3	=	1.800	m					
					W3	=	5.100	m					
Depth of back fill		=	6.30	−	1.00	=	5.30	m					
	H4	=	0.500	m	W4	=	0.550	m					
	H5	=	0.250	m	W5	=	0.550	m					
	H6	=	0.500	m	W6	=	0.200	m					
	H7	=	0.250	m	W7	=	0.200	m					
	H8	=	0.300	m	W8	=	0.300	m					
	H9	=	0.300	m	W9	=	1.800	m					

A1	W1	=	0.300	X1 =	W1/2	+	W2	+	Wf3				
					0.150	+	1.000	+	1.800	=	2.950	m	
	H1	=	1.595	Y1=	Ht	−	H1/2						
					6.300	−	0.798			=	5.502	m	
A2	W2	=	1.800	X2 =	W2/2	+	Wf3						
					0.900	+	1.800			=	2.700	m	
	H2	=	3.705	Y2=	H2/2	+	H3						
					1.852	+	1.000			=	2.853	m	
A3	W3	=	5.100	X3 =	W3/2								
					2.550					=2.550		m	
	H3	=	1.000	Y3=	H3/2								
					0.500					=	0.500	m	
A4	W4	=	0.550	X4 =	W4/2	+	W2	+	Wf3				
					0.275	+	1.800	+	1.800	=	3.875	m	
	H4	=	0.500	Y4=	H2	−	H4/2	+	H3				
					3.705	−	0.500	+	1.000	=	4.205	m	
A5	W5	=	0.550	X5 =	W5/3	+	W2	+	Wf3				
					0.183	+	1.800	+	1.800	=	3.783	m	
	H5	=	0.250	Y5=	H2	−	H4/2	−	H5/3 + H3				
					3.705	−	0.250	−	0.083 + 1.000	=	4.372	m	
A6	W6	=	0.200	X6 =	Wf3	−	W6/2						
					1.800	−	0.100			=	1.700	m	
	H6	=	0.500	Y6=	H2	−	H6/2	+	H3				
					3.705	−	0.250	+	0.083	=	3.538	m	
A7	W7	=	0.200	X7 =	Wf3	−	W7/3						
					1.800	−	0.067			=	1.733	m	
	H7	=	0.250	Y7=	H2	−	H6/2	−	H7/3 + H3				
					3.705	−	0.250	−	0.083 + 1.000	=	4.372	m	

Project	: Me anFloo Control	Japan International Cooperation Agency (JICA)	Calculation sheet	
Channel	: Percut River		Date	
Structure	: Br. P-1		Nos of sheet	
Station	: PE 57 +05 m		Prepare by	

II.1 ABUTMENT
II.1.1 Neutral axis of Left Si eAbutment

soil wet con ition

Depth of back fill Rs = Hwc elv − Top foooting elv.
= 4.742 − 3.553
= p921X1.189 m

wet−l/s	Wsw.2	=	2.300	X1 =	Wsw.2/2	+	W2	+	Wf3			
					1.150	+	1.800	+	1.800	=	4.750	m
	Hsw.2	=	5.300	Y1 =	Hsw.2/2	+	H3					
					2.650	+	1.000			=	3.650	m
wet−r/s	Wsw.3	=	1.800	X2 =	Wsw.3/2							
					0.900					=	0.900	m
	Hsw.3	=	1.189	Y2 =	Hsw.3/2	+	H3					
					0.59	+	1.000			=	1.595	m

soil saturate con ition

sat−l/s	W bf3	=	no portion of abutment up of low water level	
	H bf3	=		

al−rv

Project	: Me anFloo Control	Japan International Cooperation Agency (JICA)	Calculation sheet	
Channel	: Percut River		Date	
Structure	: Br. P-1		Nos of sheet	
Station	: PE 57 +05 m		Prepare by	

II.1 ABUTMENT
II.1.1 Neutral axis of Left Si eAbutment

Asphalt

Ha = 0.05 m

Asp	Wasp	=	3.000	Xasp=	W9/2	+	W2	+	Wf3			
					1.500	+	1.000	+	1.800	=	4.300	m
	Hasp	=	0.050	Yasp=	Ht	−	Hasp/2					
					6.300	−	0.025			=	6.275	m

Back fill

a. In case High Water Level

Hwl elvation	=	5.442	m				
Lwl elvation	=	0.200	m				
Free board	=	1.916	m				
Top deck elvation	=	Hwl elv.	+	Free boar	+	depth of beam and deck	
	=	5.442	+	1.916	+	1.495 =	8.853 m
Base foting elv.	=	8.853	−	6.300	=	2.553 m	
Top foting elv.	=	2.553	+	1.00	=	3.553 m	
Top foting elv > or higher than Elv.of LWL							
Depth of wet soil	=	H wet					
H wet.l	=	8.853	−	5.442	=	3.411 m	
Bearing elv	=	8.853	−	1.595	=	7.258 m	
H wet.r	=	7.258	−	5.442	=	1.816 m	
Depth of saturated soli HWL = Hstr							
Hstr	=	5.300	−	3.411	=	1.889 m	

soil wet con ition

wet−l/s	Wsw.1	=	2.300	X1=	W−hwl/2	+	W2	+	Wf3			
					1.150	+	1.000	+	1.800	=	3.950	m
	Hsw.1	=	3.411	Y1=	Ht	−	Hwet/2					
					6.300	−	1.705			=	4.595	m
wet−r/s	Wsw.r	=	1.800	X1=	Wsw.r/2							
					0.900					=	0.900	m
	Hsw.r	=	1.816	Y1=	Hsw.r/2	+	H3					
					0.908	+	1.00			=	1.908	m

soil saturate con ition

sat−l/s	Wss.1	=	2.300	X1=	Wss1./2	+	W2	+	Wf3			
					1.150	+	1.000	+	1.800	=	3.950	m
	Hss.1	=	1.889	Y1=	Hss.1/2	+	H3					
					0.945	+	1.000			=	1.945	m
sat−r/s	Wss.2	=	1.800	X2=	Wss.2/2							
					0.900					=	0.900	m
	Hss.2	=	1.889	Y2=	Hss.2/2	+	H3					
					0.945	+	1.000			=	1.945	m

b. In case Low Water Level

Depth of wet soil = Hwet						
H wet	=	8.853	−	3.553	=	5.300 m
Depth of saturated soil						
Hstr	=	5.300	−	5.300	=	m

al−rv

Project	: Medan Flood Control	Japan International Cooperation Agency (JICA)	Calculation sheet	
Channel	: Percut River		Date	
Structur	: Br. P-1		Nos of sheet	
Station	: PE 57 +05		Prepared by	

II.1.2 Axial load to Abutment

a. Superstucture

Vertical load/m'

Length of abutment	=	10.00	m
Nos of bearing	=	2.00	
Depth of abutment	=	6.30	m
Width of footing	=	5.10	m

Vertical load on Left Side Abutment :

Dead load	R dl	=	336.40	:	20.0 =	16.820 ton/m'
Line load	Rp	=	27.27	:	20.0 =	1.364 ton/m'
Uniform load	Rq	=	155.00	:	20.0 =	7.750 ton/m'
Pedestrian	R pd	=	15.00	:	20.0 =	0.750 ton/m'
Total load		=	533.670		=	26.684 ton/m'

Siesmic coefficient = 0.15

Horizontal load

Heq = 0.150 x Rdl
= 0.150 x 16.820
= 2.523 ton/m'

Acting point of siesmic load

Wf3 = 1.80 m
H3 = 1.00 m

X = 0.300 + WF3
= 0.300 + 1.80
= 2.100 m

Y = H2 + H3
= 3.705 + 1.00
= 4.71 m

b. Abutment section

Self weight

Section	width m	depth m	length m	nos	Yc t/m3	G / m'	Gv/m' m3	X m	Y m	G.X m3	G.Y m3
A1	0.30	1.595	1.00	1.00	2.40	1.148	1.148	2.950	5.502	3.388	3.388
A2	1.00	3.705	1.00	1.00	2.40	8.892	8.892	2.300	2.853	20.452	20.452
A3	5.10	1.00	1.00	1.00	2.40	12.240	12.240	2.550	0.500	31.212	31.212
A4	0.55	0.50	1.00	1.00	2.40	0.660	0.660	3.075	4.455	2.030	2.030
A5	0.55	0.25	1.00	1.00	2.40	0.165	0.165	2.983	4.372	0.492	0.492
A6	0.20	0.50	1.00	1.00	2.40	0.240	0.240	1.700	4.455	0.408	0.408
A7	0.20	0.50	1.00	1.00	2.40	0.120	0.120	1.733	4.372	0.208	0.208
A8	2.30	0.30	1.00	1.00	2.40	0.828	0.828	3.400	1.200	2.815	2.815
A9	1.80	0.30	1.00	1.00	2.40	0.648	0.648	1.200	1.200	0.778	0.778
					sum		24.94			61.78	61.78
					Wing wall and guard wall						
Ww1	3.000	3.000	0.40	2.00	2.400	1.728	0.173	4.300	4.800	0.743	0.743
Ww2	2.300	1.000	0.40	2.00	2.400	0.442	0.044	3.950	2.800	0.174	0.124
Ww3	0.400	1.000	0.40	2.00	2.400	0.077	0.008	4.750	2.967	0.036	0.023
Ww4	2.300	2.000	0.40	2.00	2.400	0.883	0.088	3.950	1.800	0.349	0.159
Ww5	2.300	0.300	0.40	2.00	2.400	0.132	0.013	3.567	1.100	0.047	0.015
Gw	3.00	1.20	0.40	2.00	2.000	0.576	0.058	4.300	6.900	0.248	0.397
					sum		0.326			1.350	1.063
					Miscellaneous load						
					Aproaach Road,Guide wall and Asphalt						
Aps	3.00	0.20	1.00	1.00	2.400	1.44	1.440	4.300	4.805	6.192	6.919
asp	3.00	0.05	1.00	1.00	2.300	0.35	0.345	4.300	6.275	1.483	2.165
					sum		1.785			7.675	9.084
					total		27.05			70.81	71.93

Project	: Medan Flood Control	Japan International Cooperation Agency (JICA)	Calculation sheet	
Channel	: Percut River		Date	
Structur	: Br. P-1		Nos of sheet	
Station	: PE 57 +05		Prepared by	

II.1.2 Axial load to Abutment

Centre of gravity

X = Gv/m'.X / Gv/m' = 70.807 / 27.053 = 2.617 m

Y = Gv/m'.Y / Gv/m' = 71.929 / 27.053 = 2.659 m

H-filling = 0.150 x 27.053 = 4.058 ton

c. Back fill

a. Incase High Water level

Depth of back fill = 5.300 m
H wet.l = 3.411 m
H wet.r = 1.189 m
H saturated = 1.889 m

Section	width m	depth m	length m	nos	Yc t/m3	G / m'	Gv/m' m3	X m	Y m	G.X m3	G.Y m3
Wet.l	2.300	3.411	1.00	1.00	1.850	14.514	14.514	3.950	4.595	57.33	66.69
Wet.r	1.800	1.189	1.00	1.00	1.850	3.959	3.959	0.900	1.980	3.56	7.84
Sat.-1	2.300	1.889	1.00	1.00	2.000	8.689	8.689	3.950	1.945	34.323	16.901
Sat.-2	1.800	1.889	1.00	1.00	2.000	6.800	6.800	0.900	1.945	6.120	13.227
					sum		33.963			101.336	104.658

X = Gv/m'.X / Gv/m' = 101.336 / 33.963 = 2.984 m

Y = Gv/m'.Y / Gv/m' = 104.658 / 33.963 = 3.082 m

H-filling = 0.150 x 33.963 = 5.094 ton

b. Low water level

Depth of H wet = 5.300 m
Depth of H saturated = 0.00 m

a. Wet condition

Section	width m	depth m	length m	nos	Yc t/m3	G / m'	Gv/m' m3	X m	Y m	G.X m3	G.Y m3
wet-1	2.300	5.300	1.00	1.00	1.850	22.551	22.551	3.950	3.650	89.078	82.313
wet-2	1.800	3.705	1.00	1.00	1.850	12.338	12.338	0.750	1.595	9.253	19.679
					sum		34.889			98.33	101.99

Habt 0.150 x 34.889 = 5.233 ton

Centre of gravity

X = Gv/m'.X / Gv/m' = 98.332 / 34.889 = 2.818 m = 2.818 m

Y = Gv/m'.Y / Gv/m' = 101.992 / 34.889 = 2.923 m

axi-lod

Project	: Medan Flood Control	Japan International Cooperation Agency (JICA)	Calculation sheet	
Channel	: Percut River		Date	
Structure	: Br. P-1		Nos of sheet	
Station	: PE 57 +05		Prepared by	

II.1.3 Columb's coefficient

Flight side Abutment

Normal condition

ø	=	30.00	deg.	ø − alpa	=	30.00	−	0.0 =	30.00	deg.
alpa	=	0.0	deg.	ø + delta	=	30.00	+	30.00 =	60.00	deg.
Q	=	0.0	deg.	ø − beta	=	30.00	−	0.0 =	30.00	deg.
delta	=	30.00	deg.	alpa + delta	=	0.0	+	30.00 =	30.00	deg.
beta	=	0.0	deg.	alpa − beta	=	0.0	−	0.000 =	0.00	deg.

$$Ka = \frac{\cos^2(\phi - \text{alpa})}{\cos^2 \text{alpa}.\cos(\text{alpa} + \text{delta}).\{(1 + @\text{sqrt}(\frac{\sin(\phi + \text{delta}).(\sin(\emptyset - \text{beta})}{\cos(\text{alpa} + \text{delta}).\cos(\text{alpa} - \text{beta})}))\}^2}$$

Cos(alpa)	=	1.000	sin(ø + delta)	=	0.866	
Cos^2 (alpa)	=	1.000	sin(ø − beta)	=	0.500	
Cos(ø − alpa)	=	0.866	cos(alpa + delta)	=	0.866	
Cos^2 (ø − alpa)	=	0.750	cos(alpa − beta)	=	1.000	

A = sin(ø+delta).sin(ø−beta)
= 0.866 x 0.500
= 0.433

B = cos (alpa + delta).cos(alpa−beta)
= 0.866 + 1.000
= 0.866

C = cos^2 (alpa).cos(alpa+delta) @sqrt(A/B) = 0.71
= 1.000 x 0.866
= 0.866

D = (1 + @sqrt(A/B)^2
= (1.000 + 0.707)^2
= 2.914

C.D = 0.866 x 2.914
= 2.524

$$Ka = \frac{\cos^2(\phi - \text{alpa})}{C.D} = \frac{0.75}{2.52} = 0.297$$

Earth quake condition

$$Ka = \frac{\cos(\phi - \text{alpa} - Qo)^2}{\cos Qo.\cos^2 \text{alpa}.\cos(\text{alpa} + \text{delta}^{\wedge} + Qo).\{(1 + @\text{sqrt}(\frac{\sin(\phi + \text{delta}).(\sin(\emptyset - \text{beta} - Qo)}{\cos(\text{alpa} + \text{delta} + Qo).\cos(\text{alpa} - \text{beta})}))\}^2}$$

Qo = composite siesmic angle

$$k' = \tan^{-1}.k = \frac{Y}{Y-1} \times k$$

k = siesmic coefficient in air = 0.15

Y = 2.00

Y − 1 = 1.00

$$k' = \frac{Y}{Y-1} \times k = \frac{2.00}{1.00} \times 0.15 = 0.30$$

Qo = @atan^−1.k
Qo = 8.5308

ø	=	30.00	deg.	ø − alpa−Qo	=	30.00	−	0.00 −	8.53 =	21.47
alpa	=	0.00	deg.	ø + delta	=	30.00	+	15.00	=	45.00
Q	=	8.53	deg.	ø − beta−Qo	=	30.00	−	0.00 −	8.53 =	21.47
delta	=	15.00	deg.	ø − beta + Qo	=	30.00	−	0.00 +	8.53 =	38.53
beta	=	0.00	deg.	alpa + delta+Qo	=	0.00	+	15.00 +	8.53 =	23.53
				alpa − beta	=	0.000	−	0.000	=	0.00

colum

Project	: Medan Flood Control	Japan International Cooperation Agency (JICA)	Calculation sheet	
Channel	: Percut River		Date	
Structure	: Br. P-1		Nos of sheet	
Station	: PE 57 +05		Prepared by	

II.1.3 Columb's coefficient

Cos(Qo)	=	0.989			
Cos(alpa)	=	1.000	sin(ø + delta)	=	0.707
Cos^2 (alpa)	=	1.000	sin(ø − beta − Qo)	=	0.366
Cos(ø − alpa − Qo)	=	0.931	cos(alpa + delta + Qo	=	0.917
Cos^2 (ø − alpa−Qo)^2	=	0.866	cos(alpa − beta)	=	1.000

A = sin(ø+delta).sin(ø−beta−Qo)
= 0.707 x 0.366
= 0.259

B = cos (alpa + delta+Qo).cos(alpa−beta)
= 0.917 + 1.000
= 0.917

C = cos Qo.Cos^2(alpa).cos(alpa+delta+Qo)
= 0.989 x 1.000 x 0.92
= 0.907

@sqrt(A/B) = 0.531

D = {1 + @sqrt(A/B)^2
= (1.000 + 0.531)^2
= 2.345

C.D = 0.907 x 2.345
= 2.126

$$Ke = \frac{\cos^2(\phi - \text{alpa})}{C.D} = \frac{0.87}{2.126} = 0.407$$

colum

Project	: Medan Flood Control	Japan International Cooperation Agency (JICA)	Calculation sheet	
Channel	: Percut River		Date	
Structure	: Br. P-1		Nos of sheet	
Station	: PE 57 +05 m		Prepared by	

II.1.4 Lateral earth pressure due to earthquake

Kh = C x I x S

Kh = coefficient of horizontal siesmic loading

C = the base shear coefficient,base on the data :

siesmic zone and soil condition

Siesmic zone = 4

soil condition soft so C = 0.15

S = the structure type facto = 1

I = the importance factor

for bridge carrying more than 2.000 vehicle per day

I = 1.2

C	I	S	kh
0.15	1.2	1	0.18

for all other permanent bridge

I = 1

C	I	S	kh
0.15	1	1	0.15

for temporary bridge

I = 0.8

C	I	S	kh
0.15	0.8	1	0.12

soil condition firm so C = 0.10

for bridge carrying more than 2.000 vehicle per day

C	I	S	kh
0.1	1.2	1	0.12

for all other permanent bridge

C	I	S	kh
0.1	1.00	1	0.10

for temporary bridge

C	I	S	kh
0.1	0.8	1	0.08

source,Bridge Management System

eq

Project	: Medan Flood Control	Japan International Cooperation Agency (JICA)	Calculation sheet	
Channel	: Percut River		Date	
Structure	: Br. P-1		Nos of sheet	
Station	: PE 57 +05		Prepared by	

II.1.5 Horizontal force at Abutment

Normal Condition

II.1.5.1 Case - I, High Water Level

Depth of abutment	=	6.30	m			
Surcharge load	=	1.00	t/m2			
Unit weight wet soil	=	1.85	t/m3			
Unit weight saturated soil	=	2.00	t/m3			
Unit weight of water	=	1.00	t/m3			
Width of footing						
Wf1	=	2.30	m			
Wf2	=	1.00	m			
Wf3	=	1.80	m			
W3	=	5.10	m			
Elevation of LWL	=	0.200	m			
Elevation of HWL	=	5.442	m			
Top slab elevation	=	8.853	m			
Depth of footing	=	1.00	m			
Elv.of base footing	=	8.853	-	6.30	=	2.553 m
Elv.of top footing	=	2.553	+	1.00	=	3.553 m
Depth of back fill	=	8.853	-	3.553	=	5.300 m

Depth of wet soil = H wet

H wet = Top elv. - Hwl elv.

H wet = 8.853 - 5.442 = 3.411 m

Depth of saturated soil = H sat

H sat = 5.30 - 3.411 = 1.889 m

A Active earth pressure

By live load

Surcharge load = (q)

q	=	1.00 t/m2	Sin(alpha)	=	0.00		
delta	=	0.0	L (length)	=	1.0	m	
alpa	=	0.0	H (depth)	=	6.3	m	
Cos(alpha)	=	1.00	B (width of footing)	=	5.1	m	

oefficient of active pressure ,normal condition

Ka = 0.297

Pq = q x H x L x Ka

Pq = 1.00 x 5.30 x 1.00 x 0.297

Pq = 1.57 ton

Pqv = Hq x Sin(alpha)

= 1.57 x 0.00

= 0.00 ton

X = 5.10 m

Pqh = Hq x Cos(alpha)

= 1.57 x 1.00

= 1.57 ton

Y = 5.30 : 2.00

= 2.65 m

B By earth

B-1 Wet soil

Length = 1.00 m

Hwet = 3.411 m

Hsat = 1.889 m

-1

Project	: Medan Flood Control	Japan International Cooperation Agency (JICA)	Calculation sheet	
Channel	: Percut River		Date	
Structure	: Br. P-1		Nos of sheet	
Station	: PE 57 +05		Prepared by	

II.1.5 Horizontal force at Abutment
Normal Condition
II.1.5.1 Case - I, High Water Level

1. Load triangular

Pw	=	0.50	x	Ywet	x	Hwet^2	x	L	x Ka
	=	0.50	x	1.85	x	11.63	x	1.00	x 0.297
	=	3.20 ton							

Pw(v)	=	Pw	x	Sin(alpha)	Pw(h)	=	Pw	x	Cos(alpha)
	=	3.20	x	0.00		=	3.20	x	1.00
	=	0.00 ton				=	3.20	ton	
X	=	5.10 m			Y	=	3.41	:	3.00 + 1.889
						=	3.03	m	

B-2 Saturated

H sat = 1.889 m

2. Load rectangular

Ps1	=	Ysat	x	H sat	x	L	x	Ka
	=	2.00	x	1.889	x	1.00	x	0.297
	=	1.12 ton						

Ps1(v)	=	H sat	x	Sin(alpha)	Ps1(h)	=	H sat	x	Cos(alpha)
	=	1.12		0.00		=	1.12	x	1.00
	=	0.00 ton				=	1.12	ton	
X	=	5.10 m			Y	=	1.889	:	2.00
						=	0.945	m	

3. Load triangular

Ps2	=	0.50	x	Ysat	x	H sat^2	x	L	x Ka
	=	0.50	x	2.00	x	3.57	x	1.00	x 0.297
	=	1.06 ton							

Ps2(v)	=	H sat-2	x	Sin(alpha)	Ps2(h)	=	H sat-2	x	Cos(alpha)
	=	1.06	x	0.00		=	1.06	x	1.00
	=	0.00 ton				=	1.06	ton	
X	=	5.10 m			Y	=	1.89	:	3.00
						=	0.63	m	

4. Water

Hw = 1.889 m

Pw	=	0.50	x	Yw	x	Hw^2	x	L
	=	0.50	x	1.00	x	3.57	x	1.00
	=	1.78 ton						
X	=	5.10 m						
Y	=	1.889	:	3.00				
	=	0.63 m						

5. Uplife HWL

B = 5.10 m

Pu	=	Hw	x	B	x	Yw
	=	1.889	x	5.10	x	1.00
	=	9.63 ton/m'				
X	=	5.10	:	2.00		
	=	2.55 m				

Project	: Medan Flood Control	Japan International Cooperation Agency (JICA)	Calculation sheet	
Channel	: Percut River		Date	
Structure	: Br. P-1		Nos of sheet	
Station	: PE 57 +05		Prepared by	

Normal Condition
II.1.5.2 Case - II, Low Water Level

Depth of abutment	=	6.30 m						
Surcharge load	=	1.00 t/m2						
Unit weight wet soil	=	1.85 t/m3						
Unit weight saturated soil	=	2.00 t/m3						
Unit weight of water	=	1.00 t/m3						
Width of footing								
Wf1	=	2.30 m						
Wf2	=	1.00 m						
Wf3	=	1.80 m						
W3	=	5.10 m						
Elevation of LWL	=	0.200 m						
Elevation of HWL	=	5.442 m						
Top slab elevation	=	8.853 m						
Depth of footing	=	1.000 m						
Elv.of base footing	=	8.853 -	6.30	=	2.553	m		
Elv.of top footing	=	2.553 +	1.00	=	3.553	m		
Depth of back fill	=	8.853 -	3.553	=	5.300	m		

Depth of wet soil = H wet

H wet	= Top elv. -	Lwl elv.				
H wet	= 8.853 -	3.553	=	5.300	m	
Depth of saturated soil	= H sat					
H sat	= 5.30 -	5.300	=	0.000	m	

A Active earth pressure
By live load
Surcharge load = (q)

q	=	1.00 t/m2	Sin(alpha)	=	0.00		
delta	=	0.0	L (length)	=	1.0	m	
alpa	=	0.0	H (depth)	=	6.3	m	
Cos(alpha)	=	1.00	B (width of footing)	=	5.1	m	

oefficient of active pressure ,normal condition

Ka = 0.297

Pq	=	q	x	H	x	L	x	Ka
Pq	=	1.00	x	5.30	x	1.00	x	0.297
Pq	=	1.57 ton						

Pqv	=	Hq	x	Sin(alpha)	
	=	1.57	x	0.00	
	=	0.00 ton			
X	=	5.10 m			
Pqh	=	Hq	x	Cos(alpha)	
	=	1.57	x	1.00	
	=	1.57 ton			
Y	=	5.30	:	2.00	
	=	2.65 m			

B By earth

B-1 Wet soil

Length = 1.00 m
Hwet = 5.300 m
Hsat = 0.000 m

Project	: Medan Flood Control	Japan International Cooperation Agency (JICA)	Calculation sheet	
Channel	: Percut River		Date	
Structure	: Br. P-1		Nos of sheet	
Station	: PE 57 +05		Prepared by	

Normal Condition

II.1.5.2 Case – II, Low Water Level

1. Load triangular

Pw = 0.50 x Ywet x Hwet^2 x L x Ka
= 0.50 x 1.85 x 28.09 x 1.00 x 0.297
= 7.72 ton

Pw(v)	=	Pw	x Sin(alpha)	Pw(h)	=	Pw	x Cos(alpha)	
	=	7.72	x 0.00		=	7.72	x 1.00	
	=	0.00 ton			=	7.72	ton	
X	=	5.10 m		Y	=	5.30	: 3.00 + 0.00	
					=	1.77	m	

B-2 Saturated

H sat = 0.000 m

2. Load rectangular

Ps1 = Ysat x H sat x L x Ka
= 2.00 x 0.000 x 1.00 x 0.297
= 0.00 ton

Ps1(v)	=	H sat	x Sin(alpha)	Ps1(h)	=	H sat	x Cos(alpha)	
	=	0.00	0.00		=	0.00	x 1.00	
	=	0.00 ton			=	0.00	ton	
X	=	5.10 m		Y	=	0.000	: 2.00	
					=	0.000	m	

3. Load triangular

Ps2 = 0.50 x Ysat x H sat^2 x L x Ka
= 0.50 x 2.00 x 0.00 x 1.00 x 0.297
= 0.00 ton

Ps2(v)	=	H sat-2	x Sin(alpha)	Ps2(h)	=	H sat-2	x Cos(alpha)	
	=	0.00	x 0.00		=	0.00	x 1.00	
	=	0.00 ton			=	0.00	ton	
X	=	5.10 m		Y	=	0.00	: 3.00	
					=	0.00	m	

4. Water

Hw = 0.000 m

Pw = 0.50 x Yw x Hw^2 x L
= 0.50 x 1.00 x 0.00 x 1.00
= 0.00 ton

X = 5.10 m
Y = 0.00 : 3.00
= 0.00 m

5. Uplife HWL

B = 5.10 m

Pu = Hw x B x Yw
= 0.000 x 5.10 x 1.00
= 0.00 ton/m'
X = 5.10 : 2.00
= 2.55 m

Project	: Medan Flood Control	Japan International Cooperation Agency (JICA)	Calculation sheet	
Channel	: Percut River		Date	
Structure	: Br. P-1		Nos of sheet	
Station	: PE 57 +05		Prepared by	

Earthquake Condition

II.1.5.3 Case – III, High Water Level

Depth of abutment	=	6.30 m				
Surcharge load	=	0.50 t/m2				
Unit weight wet soil	=	1.85 t/m3				
Unit weight saturated soil	=	2.00 t/m3				
Unit weight of water	=	1.00 t/m3				
Width of footing						
Wf1	=	2.30 m				
Wf2	=	1.00 m				
Wf3	=	1.80 m				
W3	=	5.10 m				
Elevation of LWL	=	0.200 m				
Elevation of HWL	=	5.442 m				
Top slab elevation	=	8.853 m				
Depth of footing	=	1.00 m				
Elv.of base footing	=	8.853 -	6.30	=	2.553	m
Elv.of top footing	=	2.553 +	1.00	=	3.553	m
Depth of back fill	=	8.853 -	3.553	=	5.300	m

Depth of wet soil = H wet

H wet = Top elv. - Hwl elv.
H wet = 8.853 - 5.442 = 3.411 m

Depth of saturated soil = H sat
H sat = 5.30 - 3.411 = 1.889 m

A Active earth pressure
By live load
Surcharge load = (q)

q	=	0.50 t/m2	Sin(alpha)	=	0.00	
delta	=	0.0	L (length)	=	1.0	m
alpa	=	0.0	H (depth)	=	6.3	m
Cos(alpha)	=	1.00	B (width of footing)	=	5.1	m

oefficient of active pressure ,normal condition

Ke = 0.407

Pq = q x H x L x Ke
Pq = 0.50 x 5.30 x 1.00 x 0.407
Pq = 1.08 ton

Pqv = Hq x Sin(alpha)
= 1.08 x 0.00
= 0.00 ton
X = 5.10 m

Pqh = Hq x Cos(alpha)
= 1.08 x 1.00
= 1.08 ton

Y = 5.30 : 2.00
= 2.65 m

B By earth

B-1 Wet soil

Length = 1.00 m
Hwet = 3.411 m
Hsat = 1.889 m

Project	: Medan Flood Control	Japan International Cooperation Agency (JICA)	Calculation sheet	
Channel	: Percut River		Date	
Structure	: Br. P−1		Nos of sheet	
Station	: PE 57 +05		Prepared by	

Earthquake Condition

II.1.5.3 Case – III, High Water Level

1. Load triangular

Pw = 0.50 x Ywet x Hwet^2 x L x Ke
= 0.50 x 1.85 x 11.63 x 1.00 x 0.407
= 4.38 ton

Pw(v)	=	Pw	x Sin(alpha)	Pw(h)	=	Pw	x Cos(alpha)	
	=	4.38	x 0.00		=	4.38	x 1.00	
	=	0.00 ton			=	4.38	ton	
X	=	5.10 m		Y	=	3.41	: 3.00 + 1.889	
					=	3.03	m	

B−2 Saturated

H sat = 1.889 m

2. Load rectangular

Ps1 = Ysat x H sat x L x Ke
= 2.00 x 1.889 x 1.00 x 0.407
= 1.54 ton

Ps1(v)	=	H sat	x Sin(alpha)	Ps1(h)	=	H sat	x Cos(alpha)	
	=	1.54	0.00		=	1.54	x 1.00	
	=	0.00 ton			=	1.54	ton	
X	=	5.10 m		Y	=	1.889	: 2.00	
					=	0.945	m	

3. Load triangular

Ps2 = 0.50 x Ysat x H sat^2 x L x Ke
= 0.50 x 2.00 x 3.57 x 1.00 x 0.407
= 1.45 ton

Ps2(v)	=	H sat−2	x Sin(alpha)	Ps2(h)	=	H sat−2	x Cos(alpha)	
	=	1.45	x 0.00		=	1.45	x 1.00	
	=	0.00 ton			=	1.45	ton	
X	=	5.10 m		Y	=	1.89	: 3.00	
					=	0.63	m	

4. Water

Hw = 1.889 m

Pw = 0.50 x Yw x Hw^2 x L
= 0.50 x 1.00 x 3.57 x 1.00
= 1.78 ton

X = 5.10 m
Y = 1.889 : 3.00
= 0.63 m

5. Uplife HWL

B = 5.10 m

Pu = Hw x B x Yw
= 1.889 x 5.10 x 1.00
= 9.63 ton/m'
X = 5.10 : 2.00
= 2.55 m

Project	: Medan Flood Control	Japan International Cooperation Agency (JICA)	Calculation sheet	
Channel	: Percut River		Date	
Structure	: Br. P−1		Nos of sheet	
Station	: PE 57 +05		Prepared by	

Earthquake Condition

II.1.5.4 Case – IV, Low Water Level

Depth of abutment	=	6.30 m				
Surcharge load	=	0.50 t/m2				
Unit weight wet soil	=	1.85 t/m3				
Unit weight saturated soil	=	2.00 t/m3				
Unit weight of water	=	1.00 t/m3				
Width of footing						
Wf1	=	2.30 m				
Wf2	=	1.00 m				
Wf3	=	1.80 m				
W3	=	5.10 m				
Elevation of LWL	=	0.200 m				
Elevation of HWL	=	5.442 m				
Top slab elevation	=	8.853 m				
Depth of footing	=	1.000 m				
Elv.of base footing	=	8.853 −	6.30	=	2.553	m
Elv.of top footing	=	2.553 +	1.00	=	3.553	m
Depth of back fill	=	8.853 −	3.553	=	5.300	m

Depth of wet soil = H wet

H wet = Top elv. − Lwl elv.
H wet = 8.853 − 3.553 = 5.300 m

Depth of saturated soil = H sat
H sat = 5.30 − 5.300 = 0.000 m

A Active earth pressure
By live load
Surcharge load = (q)

q	=	0.50 t/m2	Sin(alpha)	=	0.00		
delta	=	0.0	L (length)	=	1.0	m	
alpa	=	0.0	H (depth)	=	6.3	m	
Cos(alpha)	=	1.00	B (width of footing)	=	5.1	m	

oefficient of active pressure ,normal condition

Ke = 0.407

Pq = q x H x L x Ke
Pq = 0.50 x 5.30 x 1.00 x 0.407
Pq = 1.08 ton

Pqv = Hq x Sin(alpha)
= 1.08 x 0.00
= 0.00 ton
X = 5.10 m

Pqh = Hq x Cos(alpha)
= 1.08 x 1.00
= 1.08 ton

Y = 5.30 : 2.00
= 2.65 m

B By earth

B−1 Wet soil

Length = 1.00 m
Hwet = 5.300 m
Hsat = 0.000 m

Project	: Medan Flood Control	Japan International Cooperation Agency (JICA)	Calculation sheet	
Channel	: Percut River		Date	
Structure	: Br. P-1		Nos of sheet	
Station	: PE 57 +05		Prepared by	

Earthquake Condition

II.1.5.4 Case – IV, Low Water Level

1. Load triangular

Pw = 0.50 x Ywet x Hwet^2 x L x Ke
= 0.50 x 1.85 x 28.09 x 1.00 x 0.407
= 10.58 ton

Pw(v) = Pw x Sin(alpha) = 10.58 x 0.00 = 0.00 ton
Pw(h) = Pw x Cos(alpha) = 10.58 x 1.00 = 10.58 ton

X = 5.10 m
Y = 5.30 : 3.00 + 0.00 = 1.77 m

B-2 Saturated

H sat = 0.000 m

2. Load rectangular

Ps1 = Ysat x H sat x L x Ke
= 2.00 x 0.000 x 1.00 x 0.407
= 0.00 ton

Ps1(v) = H sat x Sin(alpha) = 0.00 x 0.00 = 0.00 ton
Ps1(h) = H sat x Cos(alpha) = 0.00 x 1.00 = 0.00 ton

X = 5.10 m
Y = 0.000 : 2.00 = 0.000 m

3. Load triangular

Ps2 = 0.50 x Ysat x H sat^2 x L x Ke
= 0.50 x 2.00 x 0.00 x 1.00 x 0.407
= 0.00 ton

Ps2(v) = H sat-2 x Sin(alpha) = 0.00 x 0.00 = 0.00 ton
Ps2(h) = H sat-2 x Cos(alpha) = 0.00 x 1.00 = 0.00 ton

X = 5.10 m
Y = 0.00 : 3.00 = 0.00 m

4. Water

Hw = 0.000 m

Pw = 0.50 x Yw x Hw^2 x L
= 0.50 x 1.00 x 0.00 x 1.00
= 0.00 ton

X = 5.10 m
Y = 0.00 : 3.00
= 0.00 m

5. Uplife HWL

B = 5.10 m

Pu = Hw x B x Yw
= 0.000 x 5.10 x 1.00
= 0.00 ton/m'

X = 5.10 : 2.00
= 2.55 m

fh-4

Project	: Medan Flood Control	Japan International Cooperation Agency (JICA)	Calculation sheet	
Channel	: Percut River		Date	
Structure	: Br. P-1		Nos of sheet	
Station	: PE 57 +05		Prepared by	

II.1.6 Combined load
Normal condition

II.1.6.1 Case – I, High Water Level

Length L = 10.00 m
Width of flo W3 = 5.10 m
Thick of foo H3 = 1.00 m

	Item	V load/m'	H load /m'	Xo	Yo	V.Xo	H.Yo
Super structure	V-sp	26.684		2.100		56.036	
Abutment	V-abt	27.050		2.167		58.617	
Back fill in Hwl	V-bf	33.963		2.984		101.346	
			Active earth pressure				
Surcharge load	Pq		1.570		2.650		4.161
Earth load triangle	Pw		3.200		3.030		9.696
Earth load rectangular	Ps1		1.120		0.945		1.058
Earth load triangle	Ps2		1.060		0.630		0.668
Water	Pw		(1.780)		0.630		(1.121)
Up life	Pu	(9.630)		2.550		(24.557)	
	Total	78.067	5.170			191.443	14.461

X = Vo.Xo / Vo tot = 191.443 / 78.067 = 2.452 m
Y = Ho.Yo / Ho tot = 14.461 / 5.170 = 2.797 m

V = V/m' x L = 78.07 x 10.00 = 780.67 ton
H = H/m' x L = 5.17 x 10.00 = 51.70 ton

M = V.(X-(0.5.W)) - H.(Y-tb)

0.5 x W = 0.50 x 5.10 = 2.55 m
(X - (0.5xW)) = 2.45 - 2.55 = (0.10) m
(Y - tb) = 2.797 - 1.00 = 1.80 m
H x (Y - tb) = 51.70 x 1.80 = 92.91 t.m

M = V x (X-(0.5 x - (H x (Y-tb))
= 780.67 x (0.10) - 92.91
= (78.28) - 92.91
= (169.19) t.m

II.1.6.2 Case – II, Low Water Level

	Item	Vo/m'	Ho/m'	Xo	Yo	Vo.Xo	Ho.Yo
Super structure	V-sp	26.684		2.100		56.036	
Abutment	V-Abt	27.050		2.167		58.617	
Back fill	V-bf	34.889		2.818		98.317	
			Active earth pressure				
Surcharge load	Hq		1.570		2.650		4.161
Earth load triangle	Hwet		7.720		1.770		13.664
Earth load uniform	Hsat-1						
Earth load triangle	Hsat-2						
Water	Pw1						
	Pw2						
Up life	Pu1						
	Pu2						
	Total	88.623	9.290			212.971	17.825

cld-an

Project	: Medan Flood Control	Japan International Cooperation Agency (JICA)	Calculation sheet	
Channel	: Percut River		Date	
Structure	: Br. P-1		Nos of sheet	
Station	: PE 57 +05		Prepared by	

II.1.6 Combined load
Normal condition

X'	=	Vo.Xo / Vo tot			Y'	=	Ho.Yo / Ho tot	
		212.971					17.825	
	=	88.623				=	9.290	
	=	2.403	m			=	1.919	m
V	=	V/m'	x	L				
	=	88.62	x	10.00				
	=	886.23	ton					
H	=	H/m'	x	L				
	=	9.29	x	10.00				
	=	92.90	ton					
M	=	V x (X-(0.5 x	-	(H x (Y-tb))				
		0.5 x W	=	0.500	x	5.10		
			=	2.55	m			
		(X -(0.5xW))	=	2.403	-	2.55		
			=	(0.15)	m			
		(Y - tb)	=	1.919	-	1.00		
			=	0.92	m			
		H x (Y - tb)	=	92.90	x	0.92		
			=	85.35	m			
M	=	V x (X-(0.5 x	-	(H x (Y-tb))				
	=	886.23	x	(0.15)	-	85.35		
	=	(130.18)	-	85.35				
	=	(215.53)	t.m					

cld-an

Project	: Medan Flood Control	Japan International Cooperation Agency (JICA)	Calculation sheet	
Channel	: Percut River		Date	
Structure	: Br. P-1		Nos of sheet	
Station	: PE 57 +05		Prepared by	

Earthquake condition

II.1.6.3 Case – III, High Water Level

Length	L	=	10.00	m
Width of flo	W3	=	5.10	m
Thick of foo	H3	=	1.00	m

	Item	V load/m'	H load /m'	Xo	Yo	V.Xo	H.Yo
Super structure	V-sp	26.684	2.523	2.100	4.710	56.036	11.883
Abutment	V-abt	27.050	4.058	2.167	4.058	58.617	16.467
Back fill in Hwl	V-bf	33.963	5.094	2.984	3.082	101.346	15.700
			Active earth pressure				
Surcharge load	Pq		1.570		2.650		4.161
Earth load triangle	Pw		3.200		3.030		9.696
Earth load rectangular	Ps1		1.120		0.945		1.058
Earth load triangle	Ps2		1.060		0.630		0.668
Water	Pw		(1.780)		0.630		(1.121)
Up life	Pu	(9.630)		2.550		(24.557)	
	Total	78.067	16.845			191.443	58.512

X'	=	Vo.Xo / Vo tot			Y'	=	Ho.Yo / Ho tot	
		191.443					58.512	
	=	78.067				=	16.845	
	=	2.452	m			=	3.474	m
V	=	V/m'	x	L				
	=	78.07	x	10.00				
	=	780.67	ton					
H	=	H/m'	x	L				
	=	16.85	x	10.00				
	=	168.45	ton					
M	=	V.(X-(0.5.W))	-	H.(Y-tb)				
		0.5 x W	=	0.50	x	5.10		
			=	2.55	m			
		(X -(0.5xW))	=	2.45	-	2.55		
			=	(0.10)	m			
		(Y - tb)	=	3.474	-	1.00		
			=	2.47	m			
		H x (Y - tb)	=	168.45	x	2.47		
			=	416.67	t.m			
M	=	V x (X-(0.5 x W))	-	(H x (Y-tb))				
	=	780.67	x	(0.10)	-	416.67		
	=	(76.26)	-	416.67				
	=	(492.95)	t.m					

II.1.6.4 Case – IV, Low Water Level

	Item	Vo/m'	Ho/m'	Xo	Yo	Vo.Xo	Ho.Yo
Super structure	V-sp	26.684	2.523	2.100	4.710	56.036	11.883
Abutment	V-Abt	27.050	4.058	2.167	4.058	58.617	16.467
Back fill	V-bf	34.889	5.233	2.818	2.923	98.317	15.296
			Active earth pressure				
Surcharge load	Hq		1.570		2.650		4.161
Earth load triangle	Hwet		7.720		1.770		13.664
Earth load uniform	Hsat-1						
Earth load triangle	Hsat-2						
Water	Pw						
Up life	Pu						
	Total	88.623	21.104			212.971	61.472

cld-aq

Project	: Medan Flood Control	Japan International Cooperation Agency (JICA)	Calculation sheet
Channel	: Percut River		Date
Structure	: Br. P-1		Nos of sheet
Station	: PE 57 +05		Prepared by

Earthquake condition

X'	=	$\frac{Vo.Xo}{Vo\ tot}$			Y'	=	$\frac{Ho.Yo}{Ho\ tot}$	
		212.971					61.472	
	=	-----				=	-----	
		88.623					21.104	
	=	2.403	m			=	2.913	m
V	=	V/m'	x	L				
	=	88.62	x	10.00				
	=	886.23	ton					
H	=	H/m'	x	L				
	=	21.10	x	10.00				
	=	211.04	ton					
M	=	V x (X-(0.5 x W))	-	(H x (Y-tb))				
		0.5 x W	=	0.500	x	5.10		
			=	2.55	m			
		(X - (0.5xW))	=	2.403	-	2.55		
			=	(0.15)	m			
		(Y - tb)	=	2.913	-	1.00		
			=	1.91	m			
		H x (Y - tb)	=	211.04	x	1.91		
			=	403.68	m			
M	=	V x (X-(0.5 x W))	-	(H x (Y-tb))				
	=	886.23	x	(0.15)	-	403.68		
	=	(130.18)	-	403.68				
	=	(533.85)	t.m					

cld-aq

Project	: Medan Flood Control	Japan International Cooperation Agency (JICA)
Channel	: Percut River	
Structure	: Br - P1	
Station	: PE 57 + 05	

FOUNDATION

Project : Medan Flood Control	Japan International Cooperation Agency (JICA)	Calculation sheet	
Channel : Percut River		Date	
Structure : Br. P-1		Nos of sheet	
Station : PB 57 + 05		Prepared by	

III.1 Pile of Left side Abutment
III.1.1 Charateristic of steel pipe pile
III.1.1 Case – I Normal condition

t'	=	thick of steel pipe corrotion.					
do	=	outer diameter of steel pipe					
t	=	thick of steel pipe after corrosion					
di	=	Inner diameter of steel pipe					
Beta	=	characteristic value of pile					
d	=	outside diameter of pile before corrotion					
de	=	outside diameter of pile after corrotion					
delta	=	the standard amount of displacement (cm)					
k	=	coefficuent of horizontal subgrade reaction (kg/cm2)					
Eo	=	modulus of deformation of the ground obtained from table 3.5					
		Inersia					
Ic	=	Inersia concrete					
Is	=	Inersia steel					
		Modulus elasticyty					
Es	=	pile/steel					
Ec	=	concrete					
thick of corosion = t'	=	0.100	x	1.0310	=	0.1031	cm
normal thick = te	=	1.031	–	0.1031	=	0.9279	cm
de effective	=	do	–	2 x te			
de	=	40.00	–	2.00	x	0.9279	
	=	40.00	–	1.86			
	=	38.14	cm				
di	=	(de – (2 x t) cm					
	=	38.14	–	2.00	x	0.93	
	=	38.14	–	1.86			
	=	36.29	cm				
de^4	=	2,116,967	cm4				
di^4	=	1,734,089	cm4				
de^4 – di^4	=	2,116,967	–	1,734,089			
	=	382,878	cm4				
		(kh.de)					
Beta	=	(----------)^0.25					
		4.E.I					
kho	=	1/30 x alpa x Eo					
Alpha	=	0.20	from table 3.5				
Eo	=	28 x N					
	=	28.00	x	10.00			
	=	280 kg/cm3					
Permanent load							
Ec (K-225)	=	257,495 kg/cm2					
Es	=	1,897,200 kg/cm2					
		257,495					
1/n	=	----------					
		1,897,200					
	=	0.1357					
Ixc	=	@pi/64 x de^4 x 1/n					
	=	0.05	x	2,116,967	x	0.13572	
	=	14,104 cm^4					

chars-n

Project : Medan Flood Control	Japan International Cooperation Agency (JICA)	Calculation sheet	
Channel : Percut River		Date	
Structure : Br. P-1		Nos of sheet	
Station : PB 57 + 05		Prepared by	

III.1 Pile of Left side Abutment
III.1.1 Charateristic of steel pipe pile
III.1.1 Case – I Normal condition

Ixs	=	@pi/64 x (de^4 – di^4)					
	=	0.05	x	382,878			
	=	18,794	cm4				
Ix tot.	=	Ixc	+	Ixs			
	=	14,104	+	18,794			
	=	32,898	cm2				
E.I	=	1,897,200	x	32,898			
	=	62,414,849,390	kg.cm2				
4.E.I	=	4	x	62,414,849,390			
	=	249,659,397,562	kg.cm2				
kho	=	1/30	x	Alpa	x	Eo	
	=	0.03	x	1	x	280	
	=	9.33 kg/cm3					
kh	=	kho x {(Bh) / 30 }^-0.75					(1)------ equition
Bh	=	@sqrt (de / Beta)					
de / Beta	=	38.1442 / 0.005031	=	7,582.47			------>>>>Beta find by trial
Bh	=	87.08					
		87.08					
Bh / 30	=	----------	=	2.90			
		30.00					
(Bh / 30)^-0.75	=	0.45					
kh	=	9.33	x	0.45			
	=	4.1971					
Beta	=	kh x de / 4.EI	)^0.25				(2)------ equition
kh	=	Beta^4 x 4.EI / de					
		6.404308E-10					
kh	=	---------	x	249,659,397,562			
		38.1442					
------ (1)	=	------ (2)					
4.1971	=	4.1917	kg/cm3				

By trial method, kh left side equal to kh right side

kh	=	4,191.71 ton / m3	
Beta	=	0.005031 cm-1	
Beta	=	0.503058 m-1	

chars-n

Project	: Medan Flood Control	Japan International Cooperation Agency (JICA)	Calculation sheet	
Channel	: Percut River		Date	
Structure	: Br. P-1		Nos of sheet	
Station	: PB 57 + 05		Prepared by	

III.1 File of Left side Abutment
III.1.1 Charateristic of steel pipe pile
III.1.1 Case – I Normal condition

kh.D = 4.19 x 38.14
= 159.89 kg/cm2

Allowance Horizontal Force

$$Han = \frac{kh.D}{Beta} \times delta$$

$$Han = \frac{159.89}{0.01} \times 1.00$$

= 31,784 kg

= 31.784 ton

chars-n

Project	: Medan Flood Control	Japan International Cooperation Agency (JICA)	Calculation sheet	
Channel	: Percut River		Date	
Structure	: Br. P-1		Nos of sheet	
Station	: PB 57 + 05		Prepared by	

III.1.1.2 Case – II Earthquake condition

t' = thick of steel pipe corrotion.
do = outer diameter of steel pipe
t = thick of steel pipe after corrosion
di = Inner diameter of steel pipe
Beta = characteristic value of pile
d = outside diameter of pile before corrotion
de = outside diameter of pile after corrotion
delta = the standard amount of displacement (cm)
k = coefficuent of horizontal subgrade reaction (kg/cm2)
Eo = modulus of deformation of the ground obtained from table 3.5

Inersia
Ic = Inersia concrete
Is = Inersia steel

Modulus elasticyty
Es = pile/steel
Ec = concrete

thick of corosion = t' = 0.100 x 1.0310 = 0.1031 cm
normal thick = te = 1.031 – 0.1031 = 0.9279 cm

de effective = do – 2 x te
de = 40.00 – 2.00 x .0.9279
= 40.00 – 1.86
= 38.14 cm

di = (de – (2 x t) cm
= 38.14 – 2.00 x 0.93
= 38.14 – 1.86
= 36.29 cm

de^4 = 2,116,967 cm4
di^4 = 1,734,089 cm4
de^4 – di^4 = 2,116,967 – 1,734,089
= 382,878 cm4

$$Beta = \left(\frac{kh.de}{4.E.I}\right)^{0.25}$$

kho = 1/30 x alpa x Eo
Alpha = 0.20 from table 3.5
Eo = 28 x N
= 28.00 x 10.00
= 280 kg/cm3

Temporary load
Ec (K-225) = 386,242 kg/cm2
Es = 1,897,200 kg/cm2

$$1/n = \frac{386{,}242}{1{,}897{,}200}$$

= 0.2036

Ixc = @pi/64 x de^4 x 1/n
= 0.05 x 2,116,967 x 0.20359
= 21,156 cm^4

chars-q

Project	: Medan Flood Control	Japan International Cooperation Agency (JICA)	Calculation sheet	
Channel	: Percut River		Date	
Structure	: Br. P-1		Nos of sheet	
Station	: PE 57 + 05		Prepared by	

III.1.1.2 Case – II Earthquake condition

Ixs = @pi/64 x (de^4 – di^4)
= 0.05 x 382,878
= 18,794 cm4

Ix tot. = Ixc + Ixs
= 21,156 + 18,794
= 39,950 cm2

E.I = 1,897,200 x 39,950
= 75,793,769,494 kg.cm2

4.E.I = 4.00 x 75,793,769,494
= 303,175,077,976 kg.cm2

kho = 1/30 x Alpa x Eo
= 0.03 x 1 x 280
= 9.33 kg/cm3

kh = kho x ((Bh) / 30) ^ –0.75 (1)------- equition

Bh = @sqrt (de / Beta)

de / Beta = 38.1442 / 0.004771 = 7,995.58 ------>>>> Beta find by trial

Bh = 89.42

Bh / 30 = 89.42 / 30.00 = 2.98

(Bh / 30) ^ –0.75 = 0.44

kh = 9.33 x 0.44
= 4.1144

Beta = (kh x de / 4.EI) ^ 0.25 (2)------ equition

kh = Beta^4 x 4.EI / de

kh = 5.18E–10 / 38.1442 x 303,175,077,976

------ (1) = ------ (2)

4.1144 = 4.1170 kg/cm3

By trial method, kh left side equal to kh right side

kh = 4,116.97 ton / m3
Beta = 0.004771 cm–1
Beta = 0.477066 m–1

chars–q

Project	: Medan Flood Control	Japan International Cooperation Agency (JICA)	Calculation sheet	
Channel	: Percut River		Date	
Structure	: Br. P-1		Nos of sheet	
Station	: PE 57 + 05		Prepared by	

III.1.1.2 Case – II Earthquake condition

kh.D = 4.12 x 38.14
= 157.04 kg/cm2

Allowance Horizontal Force

Han = kh.D / Beta x delta

Han = 157.04 / 0.00 x 1.00

= 32,918 kg

= 32.918 ton

chars–q

Project	: Medan Flood Control	Japan International Cooperation Agency (JICA)	Calculation sheet	
Channel	: Percut River		Date	
Structure	: Br. P-1		Nos of sheet	
Station	: PE 57 + 05		Prepared by	

III.1.2 Axial Bearing Load Allowable for a Pile

do	=	outer diameter of a pile (cm)					
di	=	inner diameter of a pile (cm)					
t	=	normal thick					
te	=	effective thick					
t'	=	corrosion thick					
de	=	dia. effective					
Ap1	=	area of a pile (cm2)					
Lp	=	Length of pile					
d	=	40.64	cm				
t	=	1.031	cm				
t'	=	0.10 x t					
	=	0.10	x	1.0310			
	=	0.1031	cm				
te	=	t - t'					
	=	1.0310	-	0.1031			
	=	0.9279	cm				
de	=	do - 2 x te					
	=	40.64	-	1.86			
	=	38.78	cm				
re	=	0.1939	m				
di	=	(de - (2 x te)	cm				
	=	38.78	-	1.856			
	=	36.93	cm				
de^2	=	1504.21	cm2				
di^2	=	1,363.7067	cm2				
de^2-di^2	=	1,504.2142	-	1363.71			
	=	140.5074	cm2				
	=	0.0141	m2				
	=	0.25	x	3.14	x(	de^2	- di^2)
	=	0.25	x	3.14	x	140.5074	
	=	110.35	cm2				
	=	0.0110	m2				

Modulus Elasticity

Steel							
Ep	=	1,897,200	kg/cm2				
	=	18,972,000	t/m2				
Concrete K.225							
Ec	=	242,201	kg/cm2				
		2,422,010	t/m2				
		Ec					
1/n	=	---------					
		Ep					
	=	---	=	0.1277			
		1,897,200					
di-transforme	=	d t					
dt	=	di x 1/n					
	=	36.93	x	0.1277			
	=	4.7144	cm				
dt^2	=	22.2252	cm2				
de^2 - dt^2	=	1504.21	-	22.23			
	=	1481.99					
Ap2	=	@pi/64 x (de^2-(dt)^2)					
	=	0.25	x	3.14	x	1,481.99	
	=	1,163.95	cm2				
	=	0.1164	m2				

pn-alw

Project	: Medan Flood Control	Japan International Cooperation Agency (JICA)	Calculation sheet	
Channel	: Percut River		Date	
Structure	: Br. P-1		Nos of sheet	
Station	: PE 57 + 05		Prepared by	

III.1.2 Axial Bearing Load Allowable for a Pile

Ap	=	Ap1	+	Ap2				
	=	0.0110	+	0.1164				
	=	0.1274	m2					
Lp	=	18.50	m					
N1	=	50.00						
N	=	40.00						

N - value of embedded

N-value top	N-value bot.	Elv. top	Elv. bot.	avrg depth	tot depth	avrg N-value	tot. N-value	Kind of soils	soil fricti (t/m2)	lix6
6.00	10.00	2.347	1.347	1.00	1.00	8.00	8.00	silty clay	5.40	5.40
10.00	12.00	1.347	0.347	1.00	2.00	11.00	11.00	fine sanc	6.80	6.80
12.00	8.00	0.347	(0.653)	1.00	3.00	10.00	10.00	do	6.80	6.80
8.00	16.00	(0.653)	(1.653)	1.00	4.00	12.00	12.00	do	6.80	6.80
16.00	19.00	(1.653)	(2.653)	1.00	5.00	17.50	17.50	do	6.80	6.80
19.00	16.00	(2.653)	(3.653)	1.00	6.00	17.50	17.50	do	6.80	6.80
16.00	10.00	(3.653)	(4.653)	1.00	7.00	13.00	13.00	do	6.80	6.80
10.00	3.00	(4.653)	(5.653)	1.00	8.00	6.50	6.50	silty clay	5.40	5.40
3.00	5.00	(5.653)	(6.653)	1.00	9.00	4.00	4.00	do	5.40	5.40
5.00	3.00	(6.653)	(7.653)	1.00	10.00	4.00	4.00	do	5.40	5.40
3.00	4.00	(7.653)	(8.653)	1.00	11.00	3.50	3.50	fine sanc	6.80	6.80
4.00	29.00	(8.653)	(9.653)	1.00	12.00	16.50	16.50	do	6.80	6.80
29.00	34.00	(9.653)	(10.653)	1.00	13.00	31.50	31.50	do	6.80	6.80
34.00	36.00	(10.653)	(11.653)	1.00	14.00	35.00	35.00	do	6.80	6.80
36.00	41.00	(11.653)	(12.653)	1.00	15.00	38.50	38.50	do	6.80	6.80
41.00	49.00	(12.653)	(13.653)	1.00	16.00	45.00	45.00	do	6.80	6.80
49.00	50.00	(13.653)	(14.653)	1.00	17.00	49.50	49.50	do	6.80	6.80
50.00	50.00	(14.653)	(15.653)	1.00	18.00	50.00	50.00	do	6.80	6.80
50.00	50.00	(15.653)	(16.653)	1.00	19.00	50.00	50.00	do	6.80	6.80
			sum	19.00			423.00		123.60	123.60
N - value average			=	423.00	:	19.00	=	22.26		

Material is fine sand

$$N = \frac{N1 + N2'}{2}$$

N2' = mean N-value in the range from the tip of the pile to 4 x D above.

N2' = 50.00 + 50.00 = 50.00

N2' = 50.00

$$N = \frac{50.00 + 50.00}{2} = 50.00 > 40 = 40$$

Ru = Ultimate bearing capacity of the pile

li = statum thickness with the skin friction power taken into account (m)

fi = maximum unit area skin friction power of statum with the skin friction power taken into account (t/m2)

4.D	=	4.00	x	0.3878	=	1.55	m
l = 1/2 x 4 D	=	0.50	x	1.55	=	0.78	m
l/D	=	0.78	:	0.39	=	2.00	
qd/N	=	8.00					

pn-alw

Project	: Medan Flood Control	Japan International Cooperation Agency (JICA)	Calculation sheet
Channel	: Percut River		Date
Structure	: Br. P-1		Nos of sheet
Station	: PE 57 + 05		Prepared by

III.1.2 Axial Bearing Load Allowable for a Pile

qd	=	8.00	x	N						
	=	8.00	x	40.00						
	=	320.00	ton/m2							
qd.Ap	=	320	x	0.1274						
	=	40.78	ton							
U	=	2 x @pi x re								
	=	2.00	x	3.14	x	0.1939				
	=	1.22	m							
Ru	=	qd.A + U.(total li.fi)								
	=	40.78	+	1.22	x	123.60				
	=	191.377	ton							
Lc	=	Length of pile filled by concrete								
	=	6.17	m							
Y soil	=	2.00	t/m3							
Ws	=	Effective weight of soil which replace by pile								
	=	0.25	x	@pi	x	de^2	x	Le	x	Ysoil
	=	0.25	x	3.14	x	0.15	x	18.50	x	2.00
	=	4.37	ton							
W	=	Effective weight of concrete which filled in the pile								
	=	0.25		@pi		di^2		Lc		Y concrete
	=	0.25	x	3.14	x	0.1364	x	18.50	x	2.50
	=	4.95	ton							

Force bearing capacity of a pile in Pier

Permanent load safety factor Sn = 4.00

Temporary load safety factor Sq = 3.00

Case - I, Normal Condition

$$Ran = \frac{1}{Sn} \times (Ru - Ws) + Ws - W$$

$$= \frac{1.00}{4.00} \times (191.38 - 4.37) + 4.37 - 4.95$$

Ran	=	0.25	x(	187.01	)+	-0.58				
	=	46.75	+	-0.58						
	=	46.17	ton/nos							

by material of pile

Rp	=	Ap I x fs	=	110.35	x	1,400	=	154,496	kg	
Rp	=	154.50	ton							
	=	46.17	ton							

Case - II, Earthquake Condition

$$Raq = \frac{1.00}{3.00} \times (191.38 - 4.37) + 4.37 - 4.95$$

	=	0.33	x(	187.01	) +	-0.58				
	=	62.34	+	-0.58						
	=	61.75	ton/nos							

pn-alw

Project	: Medan Flood Control	Japan International Cooperation Agency (JICA)	Calculation sheet
Channel	: Percut River		Date
Structure	: Br. P-1		Nos of sheet
Station	: PE 57 + 05		Prepared by

III.1.2 Axial Bearing Load Allowable for a Pile

Case		V	H	M	Allowance bearing pile		Nos of pile	
		ton	ton	ton.m	Vertical	Horizontal	Vertical	Horizonta
		Normal condition						
case - I	Hwl	780.67	51.70	-169.19	46.17	31.66	16.91	1.63
case - II	Lwl	886.23	92.90	-215.53	46.17	31.66	19.20	2.93
		Earthquake condition						
case - III	Hwl	780.67	168.45	-492.95	61.75	32.69	12.64	5.15
case - IV	Lwl	886.23	211.04	-533.85	61.75	32.69	14.35	6.46

pn-alw

Project	: Medan Flood Control	Japan International Cooperation Agency (JICA)	Calculation sheet	
Channel	: Percut River		Date	
Structure	: Br. P-1		Nos of sheet	
Station	: PE 57 + 05		Prepared by	

III.1.3 Spring Constante of a Pile

III.1.3.1 Case – I Normal condition

h	=	axial length of pile above the design groung surface			
Beta	=	charateristic value of pile			
k	=	coeficient of horozontal sub grade reaction (kg/cm^2)			
IE	=	flexural rigidity of pile			
K1,K2,K3&	=	spring constante			
Kv	=	Axial force (axial spring constante)			
t	=	thick of steel pipe before corrotion (cm)			
t'	=	thick of steel pipe corrosion (cm)			
te	=	thick of steel pipe after corrosion (cm)			
d	=	40.64	cm		
t	=	1.031	cm		
t'	=	0.103	cm		
te	=	1.0310	–	0.1031	
	=	0.9279	cm		
de	=	d	–	2 x te	
	=	40.64	–	1.8558	
	=	38.78	cm		
de^2	=	1,504.21	cm2		
di	=	(de – (2 x te)	cm		
	=	38.78	–	1.8558	
	=	36.93	cm		
di^2	=	1,363.71	cm2		
de^2 – di	=	1,504.21	–	1,363.71	
	=	140.51	cm2		
de^4	=	2,262,660	cm4		
di^4	=	1,859,696	cm4		
de^4– di'	=	2,262,660	–	1,859,696	
	=	402,964	cm4		

Modulus Elasticity

Permanent load

Ec (K=225	=	257,495	kg/cm2	
Es	=	1,897,200	kg/cm2	
		257,495		
1/n	=	-------	=	0.1357
		1,897,200		
dt	=	di x 1/n		
	=	36.9284	x	0.1357
	=	5.0121	cm	
dt^2	=	25.1207	cm2	
Ixc	=	@pi/64 x (dt^4)		
	=	0.0491	x	631
	=	30.98	cm^4	
Ixc	=	@pi/64 x (de^4 – di^4)		
	=	0.04909	x	402,964
	=	19,780	cm4	
I tot.	=	Ixc	+	Ixc
	=	30.9767	+	19,780.46
	=	19,811.44	cm4	
	=	0.000198114	m4	
As1	=	1/4 x 3.14 x dt^2		
	=	0.25	x	3.14 x 25.12
	=	19.73	cm2	

ks-n

Project	: Medan Flood Control	Japan International Cooperation Agency (JICA)	Calculation sheet	
Channel	: Percut River		Date	
Structure	: Br. P-1		Nos of sheet	
Station	: PE 57 + 05		Prepared by	

III.1.3 Spring Constante of a Pile

III.1.3.1 Case – I Normal condition

As2	=	1/4.3.14.(de^2–di^2)			
	=	0.25	x	3.14 x 140.51	
	=	110.35	cm2		
A tot.	=	As1	+	As2	
	=	19.73	+	110.35	
	=	130.08	cm2		
	=	0.013008406	m2		
Le	=	18.50	m		

$$Kv = a \times \frac{A\,tot.}{Le} \times Ep$$

$$a = 0.027 \times \frac{Le}{de} + 0.2$$

$$= 0.027 \times \frac{1,850.00}{38.7842} + 0.2$$

$$= 1.28790 + 0.2000$$

$$= 1.4879$$

Spring constante on axial force = Kv

$$Kv = a \times \frac{A\,tot. \times Epile}{Le}$$

$$= 1.49 \times \frac{130.08 \times 1,897,200}{1,850}$$

	=	1.49	x	133,403
	=	198,489.69	kg/cm	
	=	19,849	ton/m	
EI	=	1,897,200	x	19,811
	=	3.76E+10	kg.cm2	
	=	3,759	t.m2	
2.EI	=	2.00	x	3.76E+03
	=	7,517	t.m2	
4.EI	=	4	x	3,759
	=	15,035	t.m2	
Beta	=	0.00503058	cm-1	
Beta	=	0.503058	m-1	

Spring constante K1,K2 and K3

K1	=	4.EI.Beta^3		
	=	1.50E+04	x	0.127307
	=	1,914	t/m	

ks-n

Project	: Medan Flood Control	Japan International Cooperation Agency (JICA)	Calculation sheet	
Channel	: Percut River		Date	
Structure	: Br. P-1		Nos of sheet	
Station	: PE 57 + 05		Prepared by	

III.1.3 Spring Constante of a Pile

III.1.3.1 Case - I Normal condition

K2=K3	=	2.EI.Beta^2	
	=	7,517 x	0.253067
	=	1,902 t/rad	
K4	=	2.EI.Beta	
	=	7,517.25 x	0.503058
	=	3,782 t.m/rad	

ks-n

Project	: Medan Flood Control	Japan International Cooperation Agency (JICA)	Calculation sheet	
Channel	: Percut River		Date	
Structure	: Br. P-1		Nos of sheet	
Station	: PE 57 + 05 m		Prepared by	

III.1.3.2 Case - II Earthquake condition

h	=	axial length of pile above the design groung surface	
Beta	=	charateristic value of pile	
k	=	coeficient of horozontal sub grade reaction (kg/cm^2)	
IE	=	flexural rigidity of pile	
K1,K2,K3&	=	spring constante	
Kv	=	Axial force (axial spring constante)	
t	=	thick of steel pipe before corrotion (cm)	
t'	=	thick of steel pipe corrosion (cm)	
te	=	thick of steel pipe after corrosion (cm)	
d	=	40.64 cm	
t	=	1.031 cm	
t'	=	0.103 cm	
te	=	1.0310 -	0.1031
	=	0.9279 cm	
de	=	d - 2 x te	
	=	40.64 -	1.8558
	=	38.78 cm	
de^2	=	1,504.21 cm2	
di	=	(de - (2 x te) cm	
	=	38.78 -	1.8558
	=	36.93 cm	
di^2	=	1,363.71 cm2	
de^2 - di	=	1,504.21 -	1,363.71
	=	140.51 cm2	
de^4	=	2,262,660 cm4	
di^4	=	1,859,696 cm4	
de^4 - di'	=	2,262,660 -	1,859,696
	=	402,964 cm4	

Modulus Elasticity

Temporary load

Ec (K=225	=	386,242 kg/cm2	
Es	=	1,897,200 kg/cm2	
1/n	=	386,242 / 1,897,200 =	0.2036
dt	=	di x 1/n	
	=	36.9284 x	0.2036
	=	7.5181 cm	
dt^2	=	56.5215 cm2	
I1	=	@pi/64 x (dt^4)	
	=	0.0491 x	3,195
	=	156.82 cm^4	
I2	=	@pi/64 x (dc^4 - di^4)	
	=	0.04909 x	402,964
	=	19,780 cm4	
I tot.	=	I1 +	I2
	=	157 +	19,780.46
	=	19,937.28 cm4	
	=	0.00019 m4	
As1	=	1/4 x 3.14 x dt^2	
	=	0.25 x	3.14 x 56.52
	=	44.39 cm2	

ks-q

Project	: Medan Flood Control	Japan International Cooperation Agency (JICA)	Calculation sheet	
Channel	: Percut River		Date	
Structure	: Br. P-1		Nos of sheet	
Station	: PE 57 + 05 m		Prepared by	

III.1.3.2 Case – II Earthquake condition

As2 = 1/4.3.14.(dc^2–di^2)
= 0.25 x 3.14 x 140.51
= 110.35 cm2

A tot. = As1 + As2
= 44.39 + 110.35
= 154.75 cm2
= 0.01547 m2

Le = 18.50 m

$$Kv = a \times \frac{A\,tot.}{Le} \times Ep$$

$$a = 0.027 \times \frac{Le}{dc} + 0.2$$

$$= 0.027 \times \frac{1,850.00}{38.78} + 0.2$$

= 1.28790 + 0.2000

= 1.4879

Spring constante on axial force = Kv

$$Kv = a \times \frac{A\,tot. \times Epile}{Le}$$

$$= 1.49 \times \frac{154.75 \times 1,897,200}{1,850}$$

= 1.49 x 158,694

= 236,120.54 kg/cm

= 23,612 ton/m

EI = 1,897,200 x 19,937

= 3.78E+10 kg.cm2

= 3,783 t.m2

2.EI = 2 x 3.78E+03

= 7,565 t.m2

4.EI = 4 x 3,783

= 15,130 t.m2

Beta = 0.00477 cm-1

Beta = 0.47706 m-1

Spring constante K1,K2 and K3

K1 = 4.EI.Beta^3

= 1.51E+04 x 0.108576

= 1,643 t/m

ks-q

Project	: Medan Flood Control	Japan International Cooperation Agency (JICA)	Calculation sheet	
Channel	: Percut River		Date	
Structure	: Br. P-1		Nos of sheet	
Station	: PE 57 + 05 m		Prepared by	

III.1.3.2 Case – II Earthquake condition

K2=K3 = 2.EI.Beta^2

= 7,565 x 0.227591

= 1,722 t/rad

K4 = 2.EI.Beta

= 7,565.00 x 0.477066

= 3,609 t.m/rad

ks-q

Project	: Medan Flood Control	Japan International Cooperation Agency (JICA)	Calculation sheet	
Channel	: Percut River		Date	
Structure	: Br. P−1		Nos of sheet	
Station	: PE 57 +05 m		Prepared by	

III.1.4 Coefficient deflection of footing
III.1.4.1 Normal condition

Axx = tot.(K1 x cos ^2 ø + Kv x sin ^2 ø)
Axy = tot.(Kv − K1) x sin ø x cos ø)
Ayx = tot.(Kv − K1) x sin ø x cos ø)
Axa = tot.(KV − K1) x Xi x (sin ø x cos ø) − (K2 x cos ø))
Aax = tot.(KV − K1) x Xi x (sin ø x cos ø) − (K2 x cos ø))
Ayy = tot.(KV x cos ^2 ø + (K1 x sin ^2 ø))
Aya = tot.(KV x cos ^2 ø + K1 x sin ^2 ø) x Xi + K2 x sin ø)
Aay = tot.(KV x cos ^2 ø + K1 x sin ^2 ø) x Xi + K2 x sin ø)
Aaa = tot.(KV x cos ^2 ø + K1 x sin ^2 ø) x Xi ^2 ^ + (K2 + K3).Xi sin ø + K4)

Nos. of row		Rows (1)	(2)	(3)	(4)	Total
side -		L/s	L/s	R/s	R/s	
sign		(−)	(−)	(+)	(+)	
angle		> 0	0	< 0	< 0	
Xi	=	(1.875)	(0.625)	0.625	1.875	
n	=	7.00	7.00	7.00	7.00	
angle degree	=	0.0000	0.0000	0.0000	5.71	
sin ø	=	0.0000	0.00	0.00	0.10	
cos ø	=	1.0000	1.0000	1.0000	0.9950	
sin ø x cosø	=	0.0000	0.00	0.00	0.10	
sin ^2 ø	=	0.0000	0.00	0.00	0.01	
cos ^2 ø	=	1.0000	1.0000	1.0000	0.9901	
Xi ^2	=	3.5156	0.3906	0.3906	3.5156	
K1	=	1,914.00	1,914.00	1,914.00	1,914.00	
K2	=	1,902.00	1,902.00	1,902.00	1,902.00	
K3	=	1,902.00	1,902.00	1,902.00	1,902.00	
K4	=	3,782.00	3,782.00	3,782.00	3,782.00	
Kv	=	19,849.00	19,849.00	19,849.00	19,849.00	
n.K1	=	13,398	13,398	13,398	13,398	
n.K2	=	13,314	13,314	13,314	13,314	
n.K3	=	13,314	13,314	13,314	13,314	
n.K4	=	26,474	26,474	26,474	26,474	
n.Kv	=	138,943	138,943	138,943	138,943	
n.(K2 + K3)	=	26,628	26,628	26,628	26,628	
Xi.(n.(K2 + K3))	=	(49,928)	(16,643)	16,643	49,928	
Xi.(n.(K2 + K3)).sin ø	=	0	0	0	4,967	
n.(Kv−K1)	=	125,545	125,545	125,545	125,545	
n.(Kv−K1).sin ø.cosø	=	0	0	0	12,429	
n.K1.cos ^2 ø	=	13,398	13,398	13,398	13,265	
n.Kv.sin ^2 ø	=	0	0	0	1,375	
n.Kv.cos ^2 ø	=	138,943	138,943	138,943	137,568	
n.K1.sin ^2 ø	=	0	0	0	133	
n.K1.sin ø.cosø	=	0	0	0	1,326	
n.Kv.sin ø.cosø	=	0	0	0	13,755	
Xi.(n.K1.sin ø.cos ø)	=	0	0	0	2,487	
Xi.(n.Kv.sin ø.cos ø)	=	0	0	0	25,791	
n.K2.cos ø	=	13,314	13,314	13,314	13,248	

coe−disn

Project	: Medan Flood Control	Japan International Cooperation Agency (JICA)	Calculation sheet	
Channel	: Percut River		Date	
Structure	: Br. P−1		Nos of sheet	
Station	: PE 57 +05 m		Prepared by	

III.1.4 Coefficient deflection of footing
III.1.4.1 Normal condition

n.K2.sin ø	=	0	0	0	1,325	
n.K3.sin ø	=	0	0	0	1,325	
Xi.(n.Kv.cos ^2 ø)	=	(260,518)	(86,839)	86,839	257,939	
Xi.(n.K1.sin ^2 ø)	=	0	0	0	249	
Xi ^2.(n.Kv.cos ^2 ø)	=	488,471	54,275	54,275	483,636	
Xi ^2.(n.K1.sin ^2 ø)	=	0	0	0	466	
Xi.(n.K2.sin ø)	=	0	0	0	2,484	
Xi.(n.K3.sin ø)	=	0	0	0		
Axx = tot.(K1 x cos ^2 ø + Kv x sin ^2 ø)						
n.K1.cos ^2 ø	=	13,398	13,398	13,398	13,265	
n.Kv.sin ^2 ø	=	0	0	0	1,375	
total		13,398	13,398	13,398	14,641	54,835
Axy = tot.(Kv − K1) x sin ø x cos ø)						
n.(Kv−K1).sin ø.cosø	=	0	0	0	12,429	
A xy	=	0	0	0	12,429	12,429
A yx	=	0	0	0	12,429	12,429
Axa = tot.(KV − K1) x Xi x (sin ø x cos ø) − (K2 x cos ø))						
Xi.(n.(Kv − K1).sin ø.c	=	0	0	0	23,304	
− n.K2.cos ø	=	(13,314)	(13,314)	(13,314)	(13,248)	
Axa		(13,314)	(13,314)	(13,314)	10,056	(29,886)
Aax	=	(13,314)	(13,314)	(13,314)	10,056	(29,886)
Ayy = tot.(KV x cos ^2 ø + (K1 x sin ^2 ø))						
n.Kv.cos ^2 ø	=	138,943	138,943	138,943	137,568	
n.K1.sin ^2 ø	=	0	0	0	133	
Ayy		138,943	138,943	138,943	137,700	554,529
Aya = tot.(KV x cos ^2 ø + K1 x sin ^2 ø) x Xi + K2 x sin ø)						
Xi.(n.Kv.cos ^2 ø)	=	(260,518)	(86,839)	86,839	257,939	
Xi.(n.K1.sin ^2 ø)	=	0	0	0	249	
n.K2.sin ø	=	0	0	0	1,325	
Aya	=	(260,518)	(86,839)	86,839	259,513	(1,006)
Aay	=	(260,518)	(86,839)	86,839	259,513	(1,006)
Aaa = tot.(KV x cos ^2 ø + K1 x sin ^2 ø) x Xi ^2 ^ + (K2+K3) Xi sin ø + K4)						
Xi ^2.(n.Kv.cos ^2 ø)	=	488,471	54,275	54,275	483,636	
Xi ^2.(n.K1.sin ^2 ø)	=	0	0	0	466	
n.(K2+K3).Xi.sin ø	=	0	0	0	4,967	
n.K4	=	26,474	26,474	26,474	26,474	
Aaa		514,945	80,749	80,749	515,544	1,191,987

coe−disn

Project : Medan Flood Control	Japan International Cooperation Agency (JICA)	Calculation sheet	
Channel : Percut River		Date	
Structur : Br. P−1		Nos of sheet	
Station : PE 57 + 05		Prepared by	

III.1.4 Coefficient deflection of footing
III.1.4.2 Earthquake condition

Axx = tot.(K1 x cos ^2 ø + Kv x sin ^2 ø)
Axy = tot.(Kv − K1) x sin ø x cos ø)
Ayx = tot.(Kv − K1) x sin ø x cos ø)
Axa = tot.(KV − K1) x Xi x (sin ø x cos ø) − (K2 x cos ø))
Aax = tot.(KV − K1) x Xi x (sin ø x cos ø) − (K2 x cos ø))
Ayy = tot.(KV x cos ^2 ø + (K1 x sin ^2 ø))
Aya = tot.(KV x cos ^2 ø + K1 x sin ^2 ø) x Xi + K2 x sin ø)
Aay = tot.(KV x cos ^2 ø + K1 x sin ^2 ø) x Xi + K2 x sin ø)
Aaa = tot.(KV x cos ^2 ø + K1 x sin ^2 ø) x Xi ^2 ^ + (K2 + K3).Xi sin ø + K4)

		Rows				Total
Nos. of row		(1)	(2)	(3)	(4)	
side		L/s	L/s	R/s	R/s	
sign		(+)	(+)	(−)	(−)	
angle		> 0	0	< 0	< 0	
Xi	=	(1.875)	(0.625)	0.625	1.875	
n	=	7.00	7.00	7.00	7.00	
angle degree	=	0.0000	0.0000	0.0000	5.71	
sin ø	=	0.0000	0.00	0.00	0.10	
cos ø	=	1.0000	1.0000	1.0000	0.9950	
sin ø x cosø	=	0.0000	0.00	0.00	0.10	
sin ^2 ø	=	0.0000	0.00	0.00	0.01	
cos ^2 ø	=	1.0000	1.0000	1.0000	0.9901	
Xi^2	=	3.5156	0.3906	0.3906	3.5156	
K1	=	1,643.00	1,643.00	1,643.00	1,643.00	
K2	=	1,722.00	1,722.00	1,722.00	1,722.00	
K3	=	1,722.00	1,722.00	1,722.00	1,722.00	
K4	=	3,609.00	3,609.00	3,609.00	3,609.00	
Kv	=	23,612.00	23,612.00	23,612.00	23,612.00	
n.K1	=	11,501	11,501	11,501	11,501	
n.K2	=	12,054	12,054	12,054	12,054	
n.K3	=	12,054	12,054	12,054	12,054	
n.K4	=	25,263	25,263	25,263	25,263	
n.Kv	=	165,284	165,284	165,284	165,284	
n.(K2 + K3)	=	24,108	24,108	24,108	24,108	
Xi.(n.(K2 + K3))	=	(45,203)	(15,068)	15,068	45,203	
Xi.(n.(K2 + K3)).sin ø	=	0	0	0	4,497	
n.(Kv−K1)	=	153,783	153,783	153,783	153,783	
n.(Kv−K1).sin ø.cosø	=	0	0	0	15,224	
n.K1.cos ^2 ø	=	11,501	11,501	11,501	11,387	
n.Kv.sin ^2 ø	=	0	0	0	1,636	
n.Kv.cos ^2 ø	=	165,284	165,284	165,284	163,648	
n.K1.sin ^2 ø	=	0	0	0	114	
n.K1.sin ø.cosø	=	0	0	0	1,139	
n.Kv.sin ø.cosø	=	0	0	0	16,363	
Xi.(n.K1.sin ø.cos ø)	=	0	0	0	2,135	
Xi.(n.Kv.sin ø.cos ø)	=	0	0	0	30,681	
n.K2.cos ø	=	12,054	12,054	12,054	11,994	

coe−disq

Project : Medan Flood Control	Japan International Cooperation Agency (JICA)	Calculation sheet	
Channel : Percut River		Date	
Structur : Br. P−1		Nos of sheet	
Station : PE 57 + 05		Prepared by	

III.1.4 Coefficient deflection of footing
III.1.4.2 Earthquake condition

n.K2.sin ø	=	0	0	0	1,199	
n.K3.sin ø	=	0	0	0	1,199	
Xi.(n.Kv.cos ^2 ø)	=	(309,908)	(103,303)	103,303	306,840	
Xi.(n.K1.sin ^2 ø)	=	0	0	0	213	
Xi^2.(n.Kv.cos ^2 ø)	=	581,077	64,564	64,564	575,325	
Xi^2.(n.K1.sin ^2 ø)	=	0	0	0	400	
Xi.(n.K2.sin ø)	=	0	0	0	2,249	
Xi.(n.K3.sin ø)	=	0	0	0		
						total
Axx = tot.(K1 x cos ^2 ø + Kv x sin ^2 ø)						
n.K1.cos ^2 ø	=	11,501	11,501	11,501	11,387	
n.Kv.sin ^2 ø	=	0	0	0	1,636	
total		11,501	11,501	11,501	13,023	47,526
Axy = tot.(Kv − K1) x sin ø x cos ø)						
n.(Kv−K1).sin ø.cosø	=	0	0	0	15,224	
A xy	=	0	0	0	15,224	15,224
A yx	=	0	0	0	15,224	15,224
Axa = tot.(KV − K1) x Xi x (sin ø x cos ø) − (K2 x cos ø))						
Xi.(n.(Kv − K1).sin ø.cc	=	0	0	0	28,546	
− n.K2.cos ø	=	(12,054)	(12,054)	(12,054)	(11,994)	
Axa		(12,054)	(12,054)	(12,054)	16,552	(19,610)
Aax	=	(12,054)	(12,054)	(12,054)	16,552	(19,610)
Ayy = tot.(KV x cos ^2 ø + (K1 x sin ^2 ø))						
n.Kv.cos ^2 ø	=	165,284	165,284	165,284	163,648	
n.K1.sin ^2 ø	=	0	0	0	114	
Ayy		165,284	165,284	165,284	163,762	659,614
Aya = tot.(KV x cos ^2 ø + K1 x sin ^2 ø) x Xi + K2 x sin ø)						
Xi.(n.Kv.cos ^2 ø)	=	(309,908)	(103,303)	103,303	306,840	
Xi.(n.K1.sin ^2 ø)	=	0	0	0	213	
n.K2.sin ø	=	0	0	0	1,199	
Aya	=	(309,908)	(103,303)	103,303	308,253	(1,655)
Aay	=	(309,908)	(103,303)	103,303	308,253	(1,655)
Aaa = tot.(KV x cos ^2 ø + K1 x sin ^2 ø) x Xi ^2 ^ + (K2+K3) Xi sin ø + K4)						
Xi^2.(n.Kv.cos ^2 ø)	=	581,077	64,564	64,564	575,325	
Xi^2.(n.K1.sin ^2 ø)	=	0	0	0	400	
n.(K2+K3).Xi.sin ø	=	0	0	0	4,497	
n.K4	=	25,263	25,263	25,263	25,263	
Aaa		606,340	89,827	89,827	605,485	1,391,479

coe−disq

Project	: Medan Flood Control	Japan International Cooperation Agency (JICA)	Calculation sheet
Channel	: Percut River		Date
Structure	: Br. P−1		Nos of sheet
Station	: PE 57 + 05		Prepared by

III.1.5 Displacement of head pile
Normal condition
III.1.5.1 Case − I High Water Level

Axx	dx	+	Axy	dy	+	Axz	dz	=	H
Ayx	dx	+	Ayy	dy	+	Ayz	dz	=	V
Azx	dx	+	Azy	dy	+	Azz	dz	=	M

54,835	dx	+	12,429	dy	+	(29,866)	dz	=	51.70 H
12,429	dx	+	554,529	dy	+	(1,006)	dz	=	780.67 V
(29,866)	dx	+	(1,006)	dy	+	1,191,987	dz	=	(169.19) M

det A

5.483E+04	554529	−1006	=
	−1006	1191987	
12429	12429	−1006	=
	−29866	1191987	
−29866	12429	554529	=
	−29866	−1006	

+	54835	x(	554529	x	1191987	−	−1006	x	−1006)			
	54835	x(	660991359123	−	−1012036	)					=	3.62E+16
−	12429	x(	12429	x	1191987	−	−29866	x	−1006)			
	12429	x(	14815206423	−	−30065316	)					=	−1.84E+14
+	−29866	x(	12429	x	−1006	−	−29866	x	554529)			
	−29866	x(	−12503574	−	1.657E+10	)					=	−4.95E+14
												3.56E+16

$$\frac{1}{\det} = \frac{1}{3.56E+16}$$

Kofactor

a11	5.55E+05	−1.01E+03	+(	5.55E+05	x	1.19E+06	)−(−1.01E+03	x	−1.01E+03	)=	C11		
	−1.01E+03	1.19E+06	+(	6.61E+11			)−(1.01E+06	)		=	6.61E+11		
a12	1.24E+04	−1.01E+03	−(	1.24E+04	x	1.19E+06	)−(−2.99E+04	x	−1.01E+03	)=	C12		
	−2.99E+04	1.19E+06	−(	1.48E+10			)−(3.01E+07	)		=	−1.48E+10		
a13	1.24E+04	5.55E+05	+(	1.24E+04	x	−1.01E+03	)−(−2.99E+04	x	5.55E+05	)=	C13		
	−2.99E+04	−1.01E+03	+(	−1.25E+07			)−(−1.66E+10	)		=	1.66E+10		
a21	1.24E+04	−2.99E+04	−(	1.24E+04	x	1.19E+06	)−(−1.01E+03	x	−2.99E+04	)=	C21		
	−1.01E+03	1.19E+06	−(	1.48E+10			)−(3.01E+07	)		=	−1.48E+10		
a22	5.48E+04	−2.99E+04	+(	5.48E+04	x	1.19E+06	− −2.99E+04	x	−2.99E+04	)=	C22		
	−2.99E+04	1.19E+06	+(	6.54E+10			− 6.93E+08	)		=	6.45E+10		
a23	5.48E+04	1.24E+04	+(	5.48E+04	x	−1.01E+03	− −2.99E+04	x	1.24E+04	)=	C23		
	−2.99E+04	−1.01E+03	+(	−5.52E+07			− −3.71E+08	)		=	−3.16E+08		
a31	1.24E+04	−2.99E+04	+(	1.24E+04	x	−1.01E+03	− 5.55E+05	x	−2.99E+04	)=	C31		
	5.55E+05	−1.01E+03	+(	−1.25E+07			− −1.66E+10	)		=	1.66E+10		
a32	5.48E+04	−2.99E+04	−(	5.48E+04	x	−1.01E+03	− 1.24E+04	x	−2.99E+04	)=	C32		
	1.24E+04	−1.01E+03	−(	−5.52E+07			− −3.71E+08	)		=	−3.16E+08		
a33	5.48E+04	1.24E+04	+(	5.48E+04	x	5.55E+05	− 1.24E+04	x	1.24E+04	)=	C33		
	1.24E+04	5.55E+05	+(	3.04E+10			− 1.54E+08	)		=	3.03E+10		

$$C = \begin{vmatrix} 6.61E+11 & -1.48E+10 & 1.66E+10 \\ -1.48E+10 & 6.45E+10 & -3.16E+08 \\ 1.66E+10 & -3.16E+08 & 3.03E+10 \end{vmatrix} \qquad Adj\,C = C1 = \begin{vmatrix} 6.61E+11 & -1.48E+10 & 1.66E+10 \\ -1.48E+10 & 6.45E+10 & -3.16E+08 \\ 1.66E+10 & -3.16E+08 & 3.03E+10 \end{vmatrix}$$

$$A^{-1} = \frac{adj\,A}{\det A} = \frac{1}{\det A} \times \begin{vmatrix} 6.61E+11 & -1.48E+10 & 1.66E+10 \\ -1.48E+10 & 6.45E+10 & -3.16E+08 \\ 1.66E+10 & -3.16E+08 & 3.03E+10 \end{vmatrix} = \begin{vmatrix} 5.17E+01 & -1.48E+10 & 7.81E+02 \\ 5.17E+01 & 6.45E+10 & -1.66E+02 \\ 5.17E+01 & -3.16E+08 & -1.66E+02 \end{vmatrix}$$

$$\begin{vmatrix} 6.61E+11 & 5.17E+01 & -1.48E+10 & 7.81E+02 & 1.66E+10 & -1.66E+02 \\ -1.48E+10 & 5.17E+01 & 6.45E+10 & 7.81E+02 & -3.16E+08 & -1.66E+02 \\ 1.66E+10 & 5.17E+01 & -3.16E+08 & 7.81E+02 & 3.03E+10 & -1.66E+02 \end{vmatrix}$$

$$X = A^{-1}.b = \frac{1.00E+00}{3.56E+16} \times \begin{vmatrix} 3.42E+13 & -1.15E+13 & -2.80E+12 \\ -7.84E+11 & 5.03E+13 & 5.35E+10 \\ 8.56E+11 & -2.47E+11 & -5.12E+12 \end{vmatrix} =$$

$$X = \frac{1.00E+00}{3.56E+16} \times \begin{vmatrix} 1.99E+13 \\ 4.99E+13 \\ -4.51E+12 \end{vmatrix} = \begin{vmatrix} 5.58E-04 \\ 1.40E-03 \\ -1.27E-04 \end{vmatrix}$$

$$X = \begin{vmatrix} dx \\ dy \\ dz \end{vmatrix} = \begin{vmatrix} 0.00055752 \\ 0.00139508 \\ (0.00012678) \end{vmatrix}$$

Control

12,429.00	dx	+	554,529.00	dy	+	(1,006.00)dz	= 780.67
12429	x		0.0005575175	=	6.92936560		
554529	x		0.0013950814	=	773.613089		
−1006	x		−0.0001267837	=	0.12754444		
					780.67	=	780.67

def−h1

Project	: Medan Flood Control	Japan International Cooperation Agency (JICA)	Calculation sheet
Channel	: Percut River		Date
Structure	: Br. P−1		Nos of sheet
Station	: PE 57 + 05		Prepared by

Normal condition
III.1.5.2 Case − II Low Water Level

Axx	dx	+	Axy	dy	+	Axz	dz	=	H
Ayx	dx	+	Ayy	dy	+	Ayz	dz	=	V
Azx	dx	+	Azy	dy	+	Azz	dz	=	M

54,835	dx	+	12,429	dy	+	(29,866)	dz	=	92.90 H
12,429	dx	+	554,529	dy	+	(1,006)	dz	=	866.23 V
(29,866)	dx	+	(1,006)	dy	+	1,191,987	dz	=	(215.53) M

det A

5.483E+04	554529	−1006	=
	−1006	1191987	
12429	12429	−1006	=
	−29866	1191987	
−29866	12429	554529	=
	−29866	−1006	

+	54835	x(	554529	x	1191987	−	−1006	x	−1006)			
	54835	x(	660991359123	−	−1012036	)					=	3.62E+16
−	12429	x(	12429	x	1191987	−	−29866	x	−1006)			
	12429	x(	14815206423	−	−30065316	)					=	−1.84E+14
+	−29866	x(	12429	x	−1006	−	−29866	x	554529)			
	−29866	x(	−12503574	−	1.657E+10	)					=	−4.95E+14
												3.56E+16

$$\frac{1}{\det} = \frac{1}{3.56E+16}$$

Kofactor

a11	5.55E+05	−1.01E+03	+(	5.55E+05	x	1.19E+06	)−(−1.01E+03	x	−1.01E+03	)=	C11		
	−1.01E+03	1.19E+06	+(	6.61E+11			)−(1.01E+06	)		=	6.61E+11		
a12	1.24E+04	−1.01E+03	−(	1.24E+04	x	1.19E+06	)−(−2.99E+04	x	−1.01E+03	)=	C12		
	−2.99E+04	1.19E+06	−(	1.48E+10			)−(3.01E+07	)		=	−1.48E+10		
a13	1.24E+04	5.55E+05	+(	1.24E+04	x	−1.01E+03	)−(−2.99E+04	x	5.55E+05	)=	C13		
	−2.99E+04	−1.01E+03	+(	−1.25E+07			)−(−1.66E+10	)		=	1.66E+10		
a21	1.24E+04	−2.99E+04	−(	1.24E+04	x	1.19E+06	)−(−1.01E+03	x	−2.99E+04	)=	C21		
	−1.01E+03	1.19E+06	−(	1.48E+10			)−(3.01E+07	)		=	−1.48E+10		
a22	5.48E+04	−2.99E+04	+(	5.48E+04	x	1.19E+06	− −2.99E+04	x	−2.99E+04	)=	C22		
	−2.99E+04	1.19E+06	+(	6.54E+10			− 6.93E+08	)		=	6.45E+10		
a23	5.48E+04	1.24E+04	+(	5.48E+04	x	−1.01E+03	− −2.99E+04	x	1.24E+04	)=	C23		
	−2.99E+04	−1.01E+03	+(	−5.52E+07			− −3.71E+08	)		=	−3.16E+08		
a31	1.24E+04	−2.99E+04	+(	1.24E+04	x	−1.01E+03	− 5.55E+05	x	−2.99E+04	)=	C31		
	5.55E+05	−1.01E+03	+(	−1.25E+07			− −1.66E+10	)		=	1.66E+10		
a32	5.48E+04	−2.99E+04	−(	5.48E+04	x	−1.01E+03	− 1.24E+04	x	−2.99E+04	)=	C32		
	1.24E+04	−1.01E+03	−(	−5.52E+07			− −3.71E+08	)		=	−3.16E+08		
a33	5.48E+04	1.24E+04	+(	5.48E+04	x	5.55E+05	− 1.24E+04	x	1.24E+04	)=	C33		
	1.24E+04	5.55E+05	+(	3.04E+10			− 1.54E+08	)		=	3.03E+10		

$$C = \begin{vmatrix} 6.61E+11 & -1.48E+10 & 1.66E+10 \\ -1.48E+10 & 6.45E+10 & -3.16E+08 \\ 1.66E+10 & -3.16E+08 & 3.03E+10 \end{vmatrix} \qquad Adj\,C = C1 = \begin{vmatrix} 6.61E+11 & -1.48E+10 & 1.66E+10 \\ -1.48E+10 & 6.45E+10 & -3.16E+08 \\ 1.66E+10 & -3.16E+08 & 3.03E+10 \end{vmatrix}$$

$$A^{-1} = \frac{adj\,A}{\det A} = \frac{1}{\det A} \times \begin{vmatrix} 6.61E+11 & -1.48E+10 & 1.66E+10 \\ -1.48E+10 & 6.45E+10 & -3.16E+08 \\ 1.66E+10 & -3.16E+08 & 3.03E+10 \end{vmatrix} = \begin{vmatrix} 9.29E+01 & -1.48E+10 & 8.66E+02 \\ 9.29E+01 & 6.45E+10 & -3.16E+08 \\ 9.29E+01 & -3.16E+08 & 3.03E+10 \end{vmatrix}$$

$$\begin{vmatrix} 6.61E+11 & 9.29E+01 & -1.48E+10 & 8.66E+02 & 1.66E+10 & -2.16E+02 \\ -1.48E+10 & 9.29E+01 & 6.45E+10 & 8.66E+02 & -3.16E+08 & -2.16E+02 \\ 1.66E+10 & 9.29E+01 & -3.16E+08 & 8.66E+02 & 3.03E+10 & -2.16E+02 \end{vmatrix}$$

$$X = A^{-1}.b = \frac{1.00E+00}{3.56E+16} \times \begin{vmatrix} 8.14E+13 & -1.31E+13 & -3.57E+12 \\ -1.37E+12 & 5.71E+13 & 6.82E+10 \\ 1.54E+12 & -2.80E+11 & -6.52E+12 \end{vmatrix} =$$

$$X = \frac{1.00E+00}{3.56E+16} \times \begin{vmatrix} 4.47E+13 \\ 5.58E+13 \\ -5.26E+12 \end{vmatrix} = \begin{vmatrix} 1.26E-03 \\ 1.57E-03 \\ -1.48E-04 \end{vmatrix}$$

$$X = \begin{vmatrix} dx \\ dy \\ dz \end{vmatrix} = \begin{vmatrix} 0.00125774 \\ 0.00156971 \\ (0.00014796) \end{vmatrix}$$

Control

12,429.00	dx	+	554,529.00	dy	+	(1,006.00)dz	= 866.23
12429	x		0.0012577419	=	15.6324738		
554529	x		0.0015697081	=	870.448682		
−1006	x		−0.0001479563	=	0.14884404		
					866.23	=	866.23

def−h2

Project	: Medan Flood Control	Japan International Cooperation Agency (JICA)	Calculation sheet
Channel	: Percut River		Date
Structure	: Br. P−1		Nos of sheet
Station	: PE 57 + 05		Prepared by

Earthquake condition

III.1.5.3 Case – III High Water Level

Axx	dx	+	Axy	dy	+	Axz	dz	=	H
Ayx	dx	+	Ayy	dy	+	Ayz	dz	=	V
Azx	dx	+	Azy	dy	+	Azz	dz	=	M

47,526	dx	+	15,224	dy	+	(19,610)dz	=	188.45	H
15,224	dx	+	650,614	dy	+	(1,855)dz	=	780.67	V
(19,610)dx		+	(1,855)dy		+	1,391,479 dz	=	(492.95)	M

det A

4.753E+04	650614	−1855	=
	−1855	1391479	
15224	15224	−1855	=
	−19610	1391479	
−19610	15224	650614	=
	−19610	−1855	

+	47526	x(	650614	x	1391479	−	−1855	x	−1855)		
	47526	x(	917839029106	−	−2739025	)				=	4.36E+16
−	15224	x(	15224	x	1391479	−	−19610	x	−1855)		
	15224	x(	21183676296	−	−32454550	)				=	−3.22E+14
+	−19610	x(	15224	x	−1855	−	−19610	x	650614)		
	−19610	x(	−25195720	−	1.294E+10	)				=	−2.53E+14
											4.30E+16

$$\frac{1}{\det} = \frac{1}{4.30E+16}$$

Kofactor

a11	6.60E+05	−1.66E+03	+(	6.60E+05	x	1.39E+06	)−(	−1.66E+03	x	−1.66E+03	)=	C11
	−1.66E+03	1.39E+06	+(	9.18E+11			)−(	2.74E+06	)		=	9.18E+11
a12	1.52E+04	−1.66E+03	−(	1.52E+04	x	1.39E+06	)−(	−1.96E+04	x	−1.66E+03	)=	C12
	−1.96E+04	1.39E+06	−(	2.12E+10			)−(	3.25E+07	)		=	−2.12E+10
a13	1.52E+04	6.60E+05	+(	1.52E+04	x	−1.66E+03	)−(	−1.96E+04	x	6.60E+05	)=	C13
	−1.96E+04	−1.66E+03	+(	−2.52E+07			)−(	−1.29E+10	)		=	1.29E+10
a21	1.52E+04	−1.96E+04	−(	1.52E+04	x	1.39E+06	)−(	−1.66E+03	x	−1.96E+04	)=	C21
	−1.66E+03	1.39E+06	−(	2.12E+10			)−(	3.25E+07	)		=	−2.12E+10
a22	4.75E+04	−1.96E+04	+(	4.75E+04	x	1.39E+06	−	−1.96E+04	x	−1.96E+04	)=	C22
	−1.96E+04	1.39E+06	+(	6.61E+10			−	3.85E+08	)		=	6.57E+10
a23	4.75E+04	1.52E+04	+(	4.75E+04	x	−1.66E+03	−	−1.96E+04	x	1.52E+04	)=	C23
	−1.96E+04	−1.66E+03	+(	−7.87E+07			−	−2.99E+08	)		=	−2.20E+08
a31	1.52E+04	−1.96E+04	+(	1.52E+04	x	−1.66E+03	−	6.60E+05	x	−1.96E+04	)=	C31
	6.60E+05	−1.66E+03	+(	−2.52E+07			−	−1.29E+10	)		=	1.29E+10
a32	4.75E+04	−1.96E+04	−(	4.75E+04	x	−1.66E+03	−	1.52E+04	x	−1.96E+04	)=	C32
	1.52E+04	−1.66E+03	−(	−7.87E+07			−	−2.99E+08	)		=	−2.20E+08
a33	4.75E+04	1.52E+04	+(	4.75E+04	x	6.60E+05	−	1.52E+04	x	1.52E+04	)=	C33
	1.52E+04	6.60E+05	+(	3.13E+10			−	2.32E+08	)		=	3.11E+10

C =

9.18E+11	−2.12E+10	1.29E+10
−2.12E+10	6.57E+10	−2.20E+08
1.29E+10	−2.20E+08	3.11E+10

Adj C = C t =

9.18E+11	−2.12E+10	1.29E+10
−2.12E+10	6.57E+10	−2.20E+08
1.29E+10	−2.20E+08	3.11E+10

$$A^{-1} = \frac{\text{adj } A}{\det A} = \frac{1}{\det A} \times \begin{vmatrix} 9.18E+11 & -2.12E+10 & 1.29E+10 \\ -2.12E+10 & 6.57E+10 & -2.20E+08 \\ 1.29E+10 & -2.20E+08 & 3.11E+10 \end{vmatrix} = \begin{vmatrix} 1.66E+02 & 7.81E+02 & -4.93E+02 \\ 7.81E+02 & -2.20E+08 & -4.93E+02 \\ -4.93E+02 & -4.93E+02 & -4.93E+02 \end{vmatrix}$$

$$X = A^{-1}.b = \frac{1.00E+00}{4.30E+16} \times \begin{vmatrix} 1.55E+14 & -1.65E+13 & -6.36E+12 \\ -3.56E+12 & 5.13E+13 & 1.06E+11 \\ 2.17E+12 & -1.72E+11 & -1.53E+13 \end{vmatrix} =$$

$$X = \frac{1.00E+00}{4.30E+16} \times \begin{vmatrix} 1.32E+14 \\ 4.79E+13 \\ -1.33E+13 \end{vmatrix} = \begin{vmatrix} 3.06E-03 \\ 1.11E-03 \\ -3.10E-04 \end{vmatrix}$$

$$X = \begin{vmatrix} dx \\ dy \\ dz \end{vmatrix} = \begin{vmatrix} 0.00306030 \\ 0.00111212 \\ (0.00030981) \end{vmatrix}$$

Control

15,224.00	dx	+	650,614.00	dy	+	(1,855.00)dz	= 780.67
15224	x		0.0030602982	=		46.5899794	
650614	x		0.001112116	=		733.567281	
−1855	x		−0.0003098121	=		0.51273698	
						780.67	= 780.67

Project	: Medan Flood Control	Japan International Cooperation Agency (JICA)	Calculation sheet
Channel	: Percut River		Date
Structure	: Br. P−1		Nos of sheet
Station	: PE 57 +05 m		Prepared by

Earthquake condition

III.1.5.4 Case – IV Low Water Level

Axx	dx	+	Axy	dy	+	Axz	dz	=	H
Ayx	dx	+	Ayy	dy	+	Ayz	dz	=	V
Azx	dx	+	Azy	dy	+	Azz	dz	=	M

47,526	dx	+	15,224	dy	+	(19,610)dz	=	211.04	H
15,224	dx	+	650,614	dy	+	(1,855)dz	=	866.23	V
(19,610)dx		+	(1,855)dy		+	1,391,479 dz	=	(533.85)	M

1/1

det A

4.753E+04	650614	−1855	=
	−1855	1391479	
15224	15224	−1855	=
	−19610	1391479	
−19610	15224	650614	=
	−19610	−1855	

+	47526	x(	650614	x	1391479	−	−1855	x	−1855)		
	47526	x(	917839029106	−	−2739025	)				=	4.36E+16
−	15224	x(	15224	x	1391479	−	−19610	x	−1855)		
	15224	x(	21183676296	−	−32454550	)				=	−3.22E+14
+	−19610	x(	15224	x	−1855	−	−19610	x	650614)		
	−19610	x(	−25195720	−	1.294E+10	)				=	−2.53E+14
											4.30E+16

$$\frac{1}{\det} = \frac{1}{4.30E+16}$$

Kofactor

a11	6.60E+05	−1.66E+03	+(	6.60E+05	x	1.39E+06	)−(	−1.66E+03	x	−1.66E+03	)=	C11
	−1.66E+03	1.39E+06	+(	9.18E+11			)−(	2.74E+06	)		=	9.18E+11
a12	1.52E+04	−1.66E+03	−(	1.52E+04	x	1.39E+06	)−(	−1.96E+04	x	−1.66E+03	)=	C12
	−1.96E+04	1.39E+06	−(	2.12E+10			)−(	3.25E+07	)		=	−2.12E+10
a13	1.52E+04	6.60E+05	+(	1.52E+04	x	−1.66E+03	)−(	−1.96E+04	x	6.60E+05	)=	C13
	−1.96E+04	−1.66E+03	+(	−2.52E+07			)−(	−1.29E+10	)		=	1.29E+10
a21	1.52E+04	−1.96E+04	−(	1.52E+04	x	1.39E+06	)−(	−1.66E+03	x	−1.96E+04	)=	C21
	−1.66E+03	1.39E+06	−(	2.12E+10			)−(	3.25E+07	)		=	−2.12E+10
a22	4.75E+04	−1.96E+04	+(	4.75E+04	x	1.39E+06	−	−1.96E+04	x	−1.96E+04	)=	C22
	−1.96E+04	1.39E+06	+(	6.61E+10			−	3.85E+08	)		=	6.57E+10
a23	4.75E+04	1.52E+04	+(	4.75E+04	x	−1.66E+03	−	−1.96E+04	x	1.52E+04	)=	C23
	−1.96E+04	−1.66E+03	+(	−7.87E+07			−	−2.99E+08	)		=	−2.20E+08
a31	1.52E+04	−1.96E+04	+(	1.52E+04	x	−1.66E+03	−	6.60E+05	x	−1.96E+04	)=	C31
	6.60E+05	−1.66E+03	+(	−2.52E+07			−	−1.29E+10	)		=	1.29E+10
a32	4.75E+04	−1.96E+04	−(	4.75E+04	x	−1.66E+03	−	1.52E+04	x	−1.96E+04	)=	C32
	1.52E+04	−1.66E+03	−(	−7.87E+07			−	−2.99E+08	)		=	−2.20E+08
a33	4.75E+04	1.52E+04	+(	4.75E+04	x	6.60E+05	−	1.52E+04	x	1.52E+04	)=	C33
	1.52E+04	6.60E+05	+(	3.13E+10			−	2.32E+08	)		=	3.11E+10

C =

9.18E+11	−2.12E+10	1.29E+10
−2.12E+10	6.57E+10	−2.20E+08
1.29E+10	−2.20E+08	3.11E+10

Adj C = C1 =

9.18E+11	−2.12E+10	1.29E+10
−2.12E+10	6.57E+10	−2.20E+08
1.29E+10	−2.20E+08	3.11E+10

$$A^{-1} = \frac{\text{adj } A}{\det A} = \frac{1}{\det A} \times \begin{vmatrix} 9.18E+11 & -2.12E+10 & 1.29E+10 \\ -2.12E+10 & 6.57E+10 & -2.20E+08 \\ 1.29E+10 & -2.20E+08 & 3.11E+10 \end{vmatrix} = \begin{vmatrix} 2.11E+02 & 8.86E+02 & -5.34E+02 \\ 8.86E+02 & -2.20E+08 & -5.34E+02 \\ -5.34E+02 & -5.34E+02 & -5.34E+02 \end{vmatrix}$$

$$X = A^{-1}.b = \frac{1.00E+00}{4.30E+16} \times \begin{vmatrix} 1.94E+14 & -1.87E+13 & -6.89E+12 \\ -4.46E+12 & 5.83E+13 & 1.17E+11 \\ 2.72E+12 & -1.95E+11 & -1.66E+13 \end{vmatrix} =$$

$$X = \frac{1.00E+00}{4.30E+16} \times \begin{vmatrix} 1.68E+14 \\ 5.39E+13 \\ -1.41E+13 \end{vmatrix} = \begin{vmatrix} 3.90E-03 \\ 1.25E-03 \\ -3.27E-04 \end{vmatrix}$$

$$X = \begin{vmatrix} dx \\ dy \\ dz \end{vmatrix} = \begin{vmatrix} 0.00390428 \\ 0.00125263 \\ (0.00032714) \end{vmatrix}$$

Control

15,224.00	dx	+	650,614.00	dy	+	(1,855.00)dz	= 866.23
15224	x		0.0039042781	=		59.4367305	
650614	x		0.0012526263	=		826.249846	
−1855	x		−0.000327144	=		0.54142332	
						866.23	= 866.23

Project	: Medan Flood Control	Japan International Cooperation Agency (JICA)	Calculation sheet	
Channel	: Percut River		Date	
Structure	: Br. P−1		Nos of sheet	
Station	: PE 57 + 05		Prepared by	

III.1.6 Force at each pile head
Normal condition
III.1.6.1 Case −I, High Water Level

dxi = (dxi.cos ø) − (dy + alpa.Xi).sin ø)
dyi = (dxi.sin ø) + (dy + alpa.Xi)cos ø)

		Side	Row of pile (1)	(2)	(3)	(4)	total
			L/s	L/s	R/s	R/s	per
		sign	(−)	(−)	(+)	(+)	row
		degree	< 0			> 0	
Xi	m		(1.875)	(0.625)	0.625	1.875	
n=nos pile/rows			7.00	7.00	7.00	7.00	
ø	degree		0.00	0.00	0.00	5.71	
cos ø	degree		1.000	1.000	1.000	0.995	
sin ø	degree		0.000	0.000	0.000	0.099	
K1	t.m		1,944	1,944	1,944	1,944	
K2	t.m/rad		1,902	1,902	1,902	1,902	
K3	t.m/rad		1,902	1,902	1,902	1,902	
K4	t.m		3,782	3,782	3,782	3,782	
Kv	t.m		19,849	19,849	19,849	19,849	
dx	m		0.00055752	0.00055752	0.00055752	0.00055752	
dy	m		0.00139508	0.00139508	0.00139508	0.00139508	
alpa	rad		(0.00012678)	(0.00012678)	(0.00012678)	(0.00012678)	
dxi = dx cos ø − (dy + alpa.Xi).sin ø							
dx.cos ø	=		0.00056	0.00056	0.00056	0.00055	
dy	=		0.00140	0.00140	0.00140	0.00140	
alpa	=		(0.00013)	(0.00013)	(0.00013)	(0.00013)	
Alpa x Xi	=		0.00024	0.00008	(0.00008)	(0.00024)	
dy + Alpa x Xi	=		0.00163	0.00147	0.00132	0.00116	
(dy + alpa.Xi).sin ø	=		0.00000	0.00000	0.00000	0.00012	
dxi	=		0.00056	0.00056	0.00056	0.00044	
dyi = dx sin ø + (dy + alpa.Xi).cos ø							
dx.sin ø	=		0.0000000	0.0000000	0.0000000	0.0000555	
dy	=		0.0013951	0.0013951	0.0013951	0.0013951	
alpa	=		(0.0001268)	(0.0001268)	(0.0001268)	(0.0001268)	
Alpa x Xi	=		0.0002377	0.0000792	(0.0000792)	(0.0002377)	
dy + Alpa x Xi	=		0.0016328	0.0014743	0.0013158	0.0011574	
(dy + alpa.Xi).cos ø	=		0.0016328	0.0014743	0.0013158	0.0011516	
dyi	=		0.0016328	0.0014743	0.0013158	0.0012071	
P ni=Kv.dyi			32.41	29.26	26.12	23.96	
K1.dxi	=		1.08	1.08	1.08	0.85	
K2.alpa	=		(0.24)	(0.24)	(0.24)	(0.24)	
P hi=K1.dxi−K2.alpa	=		1.32	1.32	1.32	1.10	
K3.dxi	=		1.06	1.06	1.06	0.84	
K4.alpa	=		(0.48)	(0.48)	(0.48)	(0.48)	
M ti=−K3.dxi+K4.alpa	=		(1.54)	(1.54)	(1.54)	(1.32)	(5.94)
Mti x n	=		(10.78)	(10.78)	(10.78)	(9.21)	(41.55)
Vi = Pni.cos ø − Phi.sin ø							
Pni.cos	=		32.41	29.26	26.12	23.84	
Phi.sin ø	=		0.00	0.00	0.00	0.11	
Vi	=		32.41	29.26	26.12	23.73	
Vi.n	=		226.87	204.85	182.83	166.12	780.66
Hi= Pni.sin ø + Phi.cos ø							
Pni.sin ø	=		0.0	0.0	0.0	2.4	
Phi.cos ø	=		1.3	1.3	1.3	1.1	
Hi	=		1.32	1.32	1.32	3.47	
Hi.n	=		9.27	9.27	9.27	24.32	52.14
Vi.n.X	=		(425.37)	(128.03)	114.27	311.48	
Mti.n	=		(10.78)	(10.78)	(10.78)	(9.21)	
Mt=Mti.n + Vi.n.X	=		(436.15)	(138.81)	103.49	302.27	(169.20)

Total forces at footing of Abutment			
Ho	=	51.70	ton
Vo	=	780.67	ton
Mo	=	(169.19)	t.m

Total forces at pile head		
Hi.n = Ho	52.14	ton
Vi.n = Vo	780.66	ton
Mt = Mo	(169.20)	t.m

mnh−1

Project	: Medan Flood Control	Japan International Cooperation Agency (JICA)	Calculation sheet	
Channel	: Percut River		Date	
Structure	: Br. P−1		Nos of sheet	
Station	: PE 57 + 05		Prepared by	

Normal condition
III.1.6.2 Case −II, Low Water Level

dxi = (dxi.cos ø) − (dy + alpa.Xi).sin ø)
dyi = (dxi.sin ø) + (dy + alpa.Xi)cos ø)

		Side	Row of pile (1)	(2)	(3)	(4)	total
			L/s	L/s	R/s	R/s	per
		sign	(−)	(−)	(+)	(+)	row
		degree	< 0			> 0	
Xi	m		(1.875)	(0.625)	0.625	1.875	
n=nos pile/rows			7.00	7.00	7.00	7.00	
ø	degree		0.00	0.00	0.00	5.71	
cos ø	degree		1.000	1.000	1.000	0.995	
sin ø	degree		0.000	0.000	0.000	0.099	
K1	t.m		1,944	1,944	1,944	1,944	
K2	t.m/rad		1,902	1,902	1,902	1,902	
K3	t.m/rad		1,902	1,902	1,902	1,902	
K4	t.m		3,782	3,782	3,782	3,782	
Kv	t.m		19,849	19,849	19,849	19,849	
dx	m		0.00125774	0.00125774	0.00125774	0.00125774	
dy	m		0.00156971	0.00156971	0.00156971	0.00156971	
alpa	rad		(0.00014796)	(0.00014796)	(0.00014796)	(0.00014796)	
dxi = dx cos ø − (dy + alpa.Xi).sin ø							
dx.cos ø	=		0.00126	0.00126	0.00126	0.00125	
dy	=		0.00157	0.00157	0.00157	0.00157	
alpa	=		(0.00015)	(0.00015)	(0.00015)	(0.00015)	
Alpa x Xi	=		0.00028	0.00009	(0.00009)	(0.00028)	
dy + Alpa x Xi	=		0.00185	0.00166	0.00148	0.00129	
(dy + alpa.Xi).sin ø	=		0.00000	0.00000	0.00000	0.00013	
dxi	=		0.00126	0.00126	0.00126	0.00112	
dyi = dx sin ø + (dy + alpa.Xi).cos ø							
dx.sin ø	=		0.0000000	0.0000000	0.0000000	0.0001251	
dy	=		0.0015697	0.0015697	0.0015697	0.0015697	
alpa	=		(0.0001480)	(0.0001480)	(0.0001480)	(0.0001480)	
Alpa x Xi	=		0.0002774	0.0000925	(0.0000925)	(0.0002774)	
dy + Alpa x Xi	=		0.0018471	0.0016622	0.0014772	0.0012923	
(dy + alpa.Xi).cos ø	=		0.0018471	0.0016622	0.0014772	0.0012859	
dyi	=		0.0018471	0.0016622	0.0014772	0.0014110	
P ni=Kv.dyi			36.66	32.99	29.32	28.01	
K1.dxi	=		2.45	2.45	2.45	2.18	
K2.alpa	=		(0.28)	(0.28)	(0.28)	(0.28)	
P hi=K1.dxi−K2.alpa	=		2.73	2.73	2.73	2.46	
K3.dxi	=		2.39	2.39	2.39	2.14	
K4.alpa	=		(0.56)	(0.56)	(0.56)	(0.56)	
M ti=−K3.dxi+K4.alpa	=		(2.95)	(2.95)	(2.95)	(2.70)	(11.55)
Mti x n	=		(20.66)	(20.66)	(20.66)	(18.87)	(80.86)
Vi = Pni.cos ø − Phi.sin ø							
Pni.cos	=		36.66	32.99	29.32	27.87	
Phi.sin ø	=		0.00	0.00	0.00	0.25	
Vi	=		36.66	32.99	29.32	27.62	
Vi.n	=		256.65	230.95	205.25	193.36	886.21
Hi= Pni.sin ø + Phi.cos ø							
Pni.sin ø	=		0.0	0.0	0.0	2.8	
Phi.cos ø	=		2.7	2.7	2.7	2.5	
Hi	=		2.73	2.73	2.73	5.24	
Hi.n	=		19.09	19.09	19.09	36.67	93.93
Vi.n.X	=		(481.21)	(144.34)	128.28	362.55	
Mti.n	=		(20.66)	(20.66)	(20.66)	(18.87)	
Mt=Mti.n + Vi.n.X	=		(501.87)	(165.01)	107.62	343.68	(215.58)

Total forces at footing of Abutment			
Ho	=	92.30	ton
Vo	=	886.23	ton
Mo	=	(215.52)	t.m

Total forces at pile head		
Hi.n = Ho	93.93	ton
Vi.n = Vo	886.21	ton
Mt = Mo	(215.58)	t.m

mnh−2

Project	: Medan Flood Control	Japan International Cooperation Agency (JICA)	Calculation sheet	
Channel	: Percut River		Date	
Structure	: Br. P-1		Nos of sheet	
Station	: PE 57 +05		Prepared by	

Earthquake condition
III.6.3 Case –III, High Water Level

dxi = (dxi.cos α) – (dy + alpa.Xi).sin α)
dyi = (dxi.sin α) + (dy + alpa.Xi)cos α)

		Side	Row of pile (1)	(2)	(3)	(4)	total
			L/s	L/s	R/s	R/s	per
		sign	(–)	(–)	(+)	(+)	row
		degree	< 0			> 0	
Xi	m		(1.875)	(0.625)	0.625	1.875	
n=nos pile/rows			7.00	7.00	7.00	7.00	
α	degree		0.00	0.00	0.00	5.71	
cos α	degree		1.000	1.000	1.000	0.995	
sin α	degree		0.000	0.000	0.000	0.099	
K1	t.m		1,643	1,643	1,643	1,643	
K2	t.m/rad		1,722	1,722	1,722	1,722	
K3	t.m/rad		1,722	1,722	1,722	1,722	
K4	t.m		3,609	3,609	3,609	3,609	
Kv	t.m		23,612	23,612	23,612	23,612	
dx	m		0.00306030	0.00306030	0.00306030	0.00306030	
dy	m		0.00111212	0.00111212	0.00111212	0.00111212	
alpa	rad		(0.00030981)	(0.00030981)	(0.00030981)	(0.00030981)	
dxi = dx cos α – (dy + alpa.Xi).sin α							
dx.cos α	=		0.00306	0.00306	0.00306	0.00305	
dy	=		0.00111	0.00111	0.00111	0.00111	
alpa	=		(0.00031)	(0.00031)	(0.00031)	(0.00031)	
Alpa x Xi	=		0.00058	0.00019	(0.00019)	(0.00058)	
dy + Alpa x Xi	=		0.00169	0.00131	0.00092	0.00053	
(dy + alpa.Xi).sin α	=		0.00000	0.00000	0.00000	0.00005	
dxi	=		0.00306	0.00306	0.00306	0.00299	
dyi = dx sin α + (dy + alpa.Xi).cos α							
dx.sin α	=		0.0000000	0.0000000	0.0000000	0.0003045	
dy	=		0.0011121	0.0011121	0.0011121	0.0011121	
alpa	=		(0.0003098)	(0.0003098)	(0.0003098)	(0.0003098)	
Alpa x Xi	=		0.0005809	0.0001936	(0.0001936)	(0.0005809)	
dy + Alpa x Xi	=		0.0016930	0.0013058	0.0009185	0.0005312	
(dy + alpa.Xi).cos α	=		0.0016930	0.0013058	0.0009185	0.0005286	
dyi	=		0.0016930	0.0013058	0.0009185	0.0008331	
P ni=Kv.dyi			39.98	30.83	21.69	19.67	
K1.dxi	=		5.03	5.03	5.03	4.92	
K2.alpa	=		(0.53)	(0.53)	(0.53)	(0.53)	
P hi=K1.dxi–K2.alpa	=		5.56	5.56	5.56	5.45	
K3.dxi	=		5.27	5.27	5.27	5.15	
K4.alpa	=		(1.12)	(1.12)	(1.12)	(1.12)	
M ti=–K3.dxi+K4.alpa	=		(6.39)	(6.39)	(6.39)	(6.27)	(25.43)
Mti x n	=		(44.72)	(44.72)	(44.72)	(43.90)	(178.04)
Vi = Pni.cos α – Phi.sin α							
Pni.cos	=		39.98	30.83	21.69	19.57	
Phi.sin α	=		0.00	0.00	0.00	0.54	
Vi	=		39.98	30.83	21.69	19.03	
Vi.n	=		279.83	215.82	151.81	133.21	780.67
Hi= Pni.sin α + Phi.cos α							
Pni.sin α	=		0.0	0.0	0.0	2.0	
Phi.cos α	=		5.6	5.6	5.6	5.4	
Hi	=		5.56	5.56	5.56	7.38	
Hi.n	=		38.93	38.93	38.93	51.66	168.45
Vi.n.X	=		(524.68)	(134.89)	94.88	249.78	
Mti.n	=		(44.72)	(44.72)	(44.72)	(43.90)	
Mt=Mti.n + Vi.n.X	=		(569.39)	(179.60)	50.17	205.88	(492.95)

Total forces at footing of Abutment

Ho	=	168.45	ton
Vo	=	780.67	ton
Mo	=	(492.95)	t.m

Total forces at pile head

Hi.n = Ho	168.45	ton
Vi.n = Vo	780.67	ton
Mt = Mo	(492.95)	t.m

mnh–3

Project	: Medan Flood Control	Japan International Cooperation Agency (JICA)	Calculation sheet	
Channel	: Percut River		Date	
Structure	: Br. P-1		Nos of sheet	
Station	: PE 57 +05		Prepared by	

Earthquake condition
III.1.6.4 Case –IV, Low Water Level

dxi = (dxi.cos α) – (dy + alpa.Xi).sin α)
dyi = (dxi.sin α) + (dy + alpa.Xi)cos α)

		Side	Row of pile (1)	(2)	(3)	(4)	total
			L/s	L/s	R/s	R/s	per
		sign	(–)	(–)	(+)	(+)	row
		degree	< 0			> 0	
Xi	m		(1.875)	(0.625)	0.625	1.875	
n=nos pile/rows			7.00	7.00	7.00	7.00	
α	degree		0.00	0.00	0.00	5.71	
cos α	degree		1.000	1.000	1.000	0.995	
sin α	degree		0.000	0.000	0.000	0.099	
K1	t.m		1,643	1,643	1,643	1,643	
K2	t.m/rad		1,722	1,722	1,722	1,722	
K3	t.m/rad		1,722	1,722	1,722	1,722	
K4	t.m		3,609	3,609	3,609	3,609	
Kv	t.m		23,612	23,612	23,612	23,612	
dx	m		0.00390428	0.00390428	0.00390428	0.00390428	
dy	m		0.00125263	0.00125263	0.00125263	0.00125263	
alpa	rad		(0.00032714)	(0.00032714)	(0.00032714)	(0.00032714)	
dxi = dx cos α – (dy + alpa.Xi).sin α							
dx.cos α	=		0.00390	0.00390	0.00390	0.00388	
dy	=		0.00125	0.00125	0.00125	0.00125	
alpa	=		(0.00033)	(0.00033)	(0.00033)	(0.00033)	
Alpa x Xi	=		0.00061	0.00020	(0.00020)	(0.00061)	
dy + Alpa x Xi	=		0.00187	0.00146	0.00105	0.00064	
(dy + alpa.Xi).sin α	=		0.00000	0.00000	0.00000	0.00006	
dxi	=		0.00390	0.00390	0.00390	0.00382	
dyi = dx sin α + (dy + alpa.Xi).cos α							
dx.sin α	=		0.0000000	0.0000000	0.0000000	0.0003885	
dy	=		0.0012526	0.0012526	0.0012526	0.0012526	
alpa	=		(0.0003271)	(0.0003271)	(0.0003271)	(0.0003271)	
Alpa x Xi	=		0.0006134	0.0002045	(0.0002045)	(0.0006134)	
dy + Alpa x Xi	=		0.0018660	0.0014571	0.0010482	0.0006392	
(dy + alpa.Xi).cos α	=		0.0018660	0.0014571	0.0010482	0.0006361	
dyi	=		0.0018660	0.0014571	0.0010482	0.0010245	
P ni=Kv.dyi			44.06	34.40	24.75	24.19	
K1.dxi	=		6.41	6.41	6.41	6.28	
K2.alpa	=		(0.56)	(0.56)	(0.56)	(0.56)	
P hi=K1.dxi–K2.alpa	=		6.98	6.98	6.98	6.84	
K3.dxi	=		6.72	6.72	6.72	6.58	
K4.alpa	=		(1.18)	(1.18)	(1.18)	(1.18)	
M ti=–K3.dxi+K4.alpa	=		(7.90)	(7.90)	(7.90)	(7.76)	(31.47)
Mti x n	=		(55.33)	(55.33)	(55.33)	(54.33)	(220.31)
Vi = Pni.cos α – Phi.sin α							
Pni.cos	=		44.06	34.40	24.75	24.07	
Phi.sin α	=		0.00	0.00	0.00	0.68	
Vi	=		44.06	34.40	24.75	23.39	
Vi.n	=		308.42	240.83	173.25	163.73	886.23
Hi= Pni.sin α + Phi.cos α							
Pni.sin α	=		0.0	0.0	0.0	2.4	
Phi.cos α	=		7.0	7.0	7.0	6.8	
Hi	=		6.98	6.98	6.98	9.21	
Hi.n	=		48.85	48.85	48.85	64.50	211.04
Vi.n.X	=		(578.29)	(150.52)	108.28	307.00	
Mti.n	=		(55.33)	(55.33)	(55.33)	(54.33)	
Mt=Mti.n + Vi.n.X	=		(633.62)	(205.85)	52.95	252.67	(533.85)

Total forces at footing of Abutment

Ho	=	211.04	ton
Vo	=	886.23	ton
Mo	=	(533.85)	t.m

Total forces at pile head

Hi.n = Ho	211.04	ton
Vi.n = Vo	886.23	ton
Mt = Mo	(533.85)	t.m

mnh–4

Project	: Medan Flood Control	Japan International Cooperation Agency (JICA)	Calculation sheet
Channel	: Percut River		Date
Structure	: Br. P-1		Nos of sheet
Station	: PE 57 + 05		Prepared by

III.1.7 Control stresses on pile
Normal Condition
III.1.7.1 Case - I High Water Level

Steel pipe pile dia.400 mm
Depth embedded of pile = 18.50 m

Axial load Vi = 36.660 ton
= 36,660 kg

Moment Mi = (2.950) t.m
= (295,000) kg.cm

diameter do = 40.00 cm
outer radius ro = 20.00 cm

M' = Mx + Vi x ro
= (295,000) + 36,660 x 20.00
= (295,000) + 733,200
= 438,200 kg.cm

excentrisitas e = Mx / Vi
= (295,000) kg.cm / 36,660 kg
= (8.05) cm

concrete covering a' = 2.50 cm
t = 1.03 cm
Inner diameter d i = 40.00 - 2.06
= 37.94
Inner radius ri = 18.97 cm

ro^2 = 400.00
ri^2 = 359.86
ro^2-ri^2 = 400.00 - 359.86
ro^2-ri^2 = 40.14 cm2

Area of steel bar
As = 8 ø 16 --Ø 16
8.00 x 2.0106 = 16.08 cm2

As = 16.08 cm2

Ys = Area of bar.Y bar / Area of bar
= (16.08 x 18.97) / 16.08
= 305.13 / 16.08
= 18.97 cm

n = 1,897,200 / 257,495
= 7.37

p = tot.Area of steel bar / @pi.ro^2
= 16.08 / (3.14 x 400.00)
= 16.08 / 1,256.64

p = 0.01280

n.p = 7.37 x 0.01280
= 1.54810

alpa = ri / ro = 18.97 / 20.00 = 0.95

e = (8.05) cm

e / ro = (8.05) / 20.00 = (0.4023)

e / ro = (pi/4 - (5/12 - 1/6.cos^2 pi)sin pi.cos pi + (n.@pi.p)/2.(ri/ro)^2) / (sin pi/3.(2 + cos^2 pi) - pi.cos pi - n.@pi.p cos pi)

trial value of pi --->>>> pi = 5.0261 degree
pi = 0.0877 rad.

e = pi/4 - (5/12 - 1/6.cos^2 pi)sin pi.cos pi + (n.@pi.p)/2.(alpa)^2

pi/4 = A	=	0.0877	:	4.00	=	0.02
n	=	7.37				
alpa	=	0.95 cm				
alpa^2	=	0.90 cm^2				
cos pi	=	0.996155				
Sin pi	=	0.087610				
Cos^2 pi	=	0.992325				
1/6.cos^2 pi	=	0.166667 x	0.992325	=	0.16539	
(5/12 - 1/6.cos^2 pi)	=	0.416667 -	0.165387	=	0.251279	
Sin pi cos pi	=	0.087610 x	0.996155	=	0.09	
(5/12 - 1/6.cos^2 pi) x sin pi.cos pi = B	=	0.25128 x	0.99615			= 0.25031
(n.@pi.p)	=	1.55 x	3.14	=	4.86	
(n.@pi.p)/2	=	4.86 :	2.00	=	2.43	
(n.@pi.p)/2 x (alpa)^2 = C	=	2.43 x	0.90			= 2.19
sum A - B + C	=	0.02 -	0.25 +		2.19	= 1.96

ro = sin pi/3.(2 + cos^2 pi) - pi.cos pi - n.@pi.p cos pi

(Sin pi)3	=	0.029				
(2 + cos^2 pi)	=	2.000 +	0.992	=	2.992	
sin ø /3 x (2 + cos^2 pi)	=	0.029 x	2.992			= 0.087
pi.cos pi	=	0.088 x	0.996			= 0.087
n.@pi.p	=	1.548 x	3.142	=	4.864	
n.@pi.p cos pi	=	4.864 x	0.996			= 4.845
						= (4.845)

e / ro = 1.96 / (4.84)

pi = 5.03 rad

e / ro = (0.4044)

e / ro = (0.4023)

teg-n

Project	: Medan Flood Control	Japan International Cooperation Agency (JICA)	Calculation sheet
Channel	: Percut River		Date
Structure	: Br. P-1		Nos of sheet
Station	: PE 57 + 05		Prepared by

III.1.7 Control stresses on pile
Normal Condition
III.1.7.1 Case - I High Water Level

teg-n

Project	: Medan Flood Control
Channel	: Percut River
Structure	: Br. P−1
Station	: PE 57 + 05

Japan International Cooperation Agency (JICA)

Calculation sheet	
Date	
Nos of sheet	
Prepared by	

III.1.7 Control stresses on pile

Normal Condition

III.1.7.1 Case − I High Water Level

$$C = \frac{1 - \cos pi}{2\sin^3 pi/3 - pi\cos pi + \sin pi\cos^2 pi + pi/4 - \sin pi.\cos pi/4 - \sin^3 pi.\cos pi/6 \; @pi.np.(alpa^2/2 - \cos pi)}$$

Cos pi	=	0.996						
sin pi	=	0.088						
sin^3 pi	=	0.001						
sin pi.cos pi	=	0.088	x	0.996	=	0.087		
Cos ^ 2pi	=	0.992						
1 − cos pi	=	1.000	−	0.996	=	0.004		
2.sin^3 pi	=	2.000	x	0.001	=	0.001		
2.sin^3 pi/3 = A	=	0.001	:	3.000			=	0.000
pi.cos pi = B	=	0.088	x	0.996			=	0.087
sin pi.cos^2 pi = C	=	0.088	x	0.992			=	0.087
pi/4 = D	=	0.022					=	0.022
Cos pi/4	=	0.996	:	4.000	=	0.249		
sin pi.cos pi/4 = E	=	0.088	x	0.249			=	0.022
(sin^3 pi.cos pi)	=	0.001	x	0.996	=	0.001		
(sin^3 pi.cos pi)/6 = F	=	0.001	:	6.000			=	0.000
n.p	=	1.548						
@pi.np	=	3.142	x	1.548	=	4.864		
alpa	=	0.948						
alpa^2	=	0.900						
alpa^2/2	=	0.900	:	2.000	=	0.450		
alpa^2/2−cos pi	=	0.450	−	0.996	=	(0.546)		
@pi.np x alpa^2/2	=	4.864	x	0.450	=	2.188		
@pi.np x alpa^2/2−cos pi = G	=	2.188	−	0.996			=	1.192
sum = A − B + C + D − E − F + G							=	1.192

$$C = \frac{1 - \cos pi}{2\sin^3 pi/3 - pi\cos pi + \sin pi\cos^2 pi + pi/4 - \sin pi.\cos pi/4 - \sin^3 pi.\cos pi/6 \; @pi.np.(alpa^2/2 - \cos pi)}$$

$$C = \frac{0.003845}{1.192} = 0.00323$$

$$S = C \times \frac{alpa + \cos pi}{1 - \cos pi}$$

$$= 0.003 \times \frac{0.948 + 0.996}{0.004}$$

$$= 0.003 \times 505.746$$

$$= 1.632$$

M' = 438,200 kg.cm

ro = 20.000 cm

stres on concrete = fc

$$fc = \frac{M'}{ro^3} \times C$$

$$= \frac{438,200}{8,000} \times 0.003$$

$$= 54.775 \times 0.003$$

$$= 0.18 \text{ kg/cm2} > 70 \text{ kg/cm2}$$

stres on steel = fs

$$fs = \frac{M'}{ro^3} \times S \times n$$

$$= \frac{438,200}{8,000} \times 1.632 \times 7 \text{ kg/cm2}$$

$$= 54.775 \times 1.632 \times 7 \text{ kg/cm2}$$

$$= 659 \text{ kg/cm2}$$

Project	: Medan Flood Control	Japan International Cooperation Agency (JICA)	Calculation sheet	
Channel	: Percut River		Date	
Structure	: Br. P−1		Nos of sheet	
Station	: PE 57 +05 m		Prepared by	

Control stresses on pile
Earthquake Condition
III.1.7.2 Case − III Low Water Level

Steel pipe pile dia.400 mm
Depth embedded of pile = 18.50 m

Axial load Vi = 44.060 ton
= 44,060 kg

Moment Mi = (7.900) t.m
= (790,000) kg.cm

diameter do = 40.00 cm
outer radius ro = 20.00 cm

M' = Mx + Vi x ro
= (790,000) + 44,060 x 20.00
= (790,000) + 881,200
= 91,200 kg.cm

excentrisitas e = Mx / Vi
= (790,000) kg.cm / 44,060 kg
= (17.93) cm

concrete covering z' = 2.50 cm
t = 1.03 cm
Inner diameter d i = 40.00 − 2.06
= 37.94
inner radius ri = 18.97 cm
ro^2 = 400.00
ri^2 = 359.86
ro^2−ri^2 = 400.00 − 359.86
ro^2−ri^2 = 40.14 cm2

area of steel bar
As = 8 ø 16 −− Ø 16
8.00 x 2.0106 = 16.08 cm2
As = 16.08 cm2

Ys = Area of bar.Y bar / Area of bar
= (16.08 x 18.97) / 16.08
= 305.13 / 16.08
= 18.97 cm

n = 1,897,200 / 386.242
= 4.91

p = tot.A rea of steel bar / @pi.ro^2
= 16.08 / (3.14 x 400.00)

Project	: Medan Flood Control	Japan International Cooperation Agency (JICA)	Calculation sheet	
Channel	: Percut River		Date	
Structure	: Br. P−1		Nos of sheet	
Station	: PE 57 +05 m		Prepared by	

Control stresses on pile
Earthquake Condition
III.1.7.2 Case − III Low Water Level

= 16.08 / 1,256.64
= 0.01280

n.p = 4.91 x 0.01280
= 1.54810

alpa = ri / ro = 18.97 / 20.00 = 0.95

e = (17.93) cm

e / ro = (17.93) / 20.00 = (0.8965)

e / ro = (pi/4 − (5/12 − 1/6.cos^2 pi) sin pi.cos pi + (n.@pi.p)/2.(ri/ro)^2) / (sin pi/3.(2 + cos^2 pi) − pi.cos pi − n.@pi.p cos pi)

trial value of pi −−−>>>> pi = 57.5261 degree
pi = 1.0040 rad.

e = pi/4 − (5/12 − 1/6.cos^2 pi) sin pi.cos pi + (n.@pi.p)/2.(alpa)^2

pi/4 = A	=	1.0040	:	4.00	=	0.25	
n	=	4.91					
alpa	=	0.95 cm					
alpa^2	=	0.90 cm^2					
cos pi	=	0.536915					
Sin pi	=	0.843636					
Cos^2 pi	=	0.288278					
1/6.cos^2 pi	=	0.166667	x	0.288278	=	0.04805	
(5/12 − 1/6.cos^2 pi)	=	0.416667	−	0.048046	=	0.368620	
Sin pi cos pi	=	0.843636	x	0.536915	=	0.45	
(5/12 − 1/6.cos^2 pi) x sin pi.cos pi = B	=	0.36862	x	0.53692			= 0.19792
(n.@pi.p)	=	1.55	x	3.14	=	4.86	
(n.@pi.p)/2	=	4.86	:	2.00	=	2.43	
(n.@pi.p)/2 x (alpa)^2 = C	=	2.43	x	0.90			= 2.19
sum A − B + C	=	0.25	−	0.20	+	2.19	= 2.24

ro = sin pi/3.(2 + cos^2 pi) − pi.cos pi − n.@pi.p cos pi

(Sin pi)3	=	0.281					
(2 + cos^2 pi)	=	2.000	+	0.288	=	2.288	
sin ø /3 x (2 + cos^2 pi)	=	0.281	x	2.288			= 0.643
pi.cos pi	=	1.004	x	0.537			= 0.539
n.@pi.p	=	1.548	x	3.142	=	4.864	
n.@pi.p cos pi	=	4.864	x	0.537			= 2.611
							= (2.507)

e / ro = 2.24 / (2.51) pi = 57.53 rad

e / ro = (0.8939) e / ro = (0.8965)

tcg−q

Project	: Medan Flood Control	Japan International Cooperation Agency (JICA)	Calculation sheet	
Channel	: Percut River		Date	
Structure	: Br. P-1		Nos of sheet	
Station	: PE 57 +05 m		Prepared by	

Control stresses on pile
Earthquake Condition
III.1.7.2 Case - III Low Water Level

$$C = \frac{1 - \cos pi}{2 \sin^3 pi/3 - pi \cos pi + \sin pi \cos^2 pi + pi/4 - \sin pi.\cos pi/4 - \sin^3 3.pi.\cos pi/6 \ @pi.np.(alpa^2/2 - \cos pi)}$$

Cos pi	=	0.537						
sin pi	=	0.844						
sin^3 pi	=	0.600						
sin pi.cos pi	=	0.844	x	0.537	=	0.453		
Cos ^ 2pi	=	0.288						
1 - cos pi	=	1.000	-	0.537	=	0.463		
2.sin^3 pi	=	2.000	x	0.600	=	1.201		
2.sin^3 pi/3 = A	=	1.201	:	3.000			=	0.400
pi.cos pi = B	=	1.004	x	0.537			=	0.539
sin pi.cos^2 pi = C	=	0.844	x	0.288			=	0.243
pi/4 = D	=	0.251					=	0.251
Cos pi/4	=	0.537	:	4.000	=	0.134		
sin pi.cos pi/4 = E	=	0.844	x	0.134			=	0.113
(sin^3 pi.cos pi)	=	0.600	x	0.537	=	0.322		
(sin^3 pi.cos pi)/6 = F	=	0.322	:	6.000			=	0.054
n.p	=	1.548						
@pi.np	=	3.142	x	1.548	=	4.864		
alpa	=	0.948						
alpa^2	=	0.900						
alpa^2/2	=	0.900	:	2.000	=	0.450		
alpa^2/2-cos pi	=	0.450	-	0.537	=	(0.087)		
@pi.np x alpa^2/2	=	4.864	x	0.450	=	2.188		
@pi.np x alpa^2/2-cos ø = G	=	2.188	-	0.537			=	1.651
sum = A - B + C + D - E - F + G							=	1.839

$$C = \frac{1 - \cos pi}{2 \sin^3 pi/3 - pi \cos pi + \sin pi \cos^2 pi + pi/4 - \sin pi.\cos pi/4 - \sin^3 3.pi.\cos pi/6 \ @pi.np.(alpa^2/2 - \cos pi)}$$

$$C = \frac{0.463085}{1.839} = 0.25178$$

$$S = C \times \frac{alpa + \cos pi}{1 - \cos pi}$$

$$= 0.252 \times \frac{0.948 + 0.537}{0.463}$$

$$= 0.252 \times 3.208$$

$$= 0.808$$

M' = 91,200 kg.cm
ro = 20.000 cm

stres on concrete = fc

$$fc = \frac{M'}{ro^3} \times C$$

$$= \frac{91,200}{8,000} \times 0.252$$

$$= 11.400 \times 0.252$$

Project	: Medan Flood Control	Japan International Cooperation Agency (JICA)	Calculation sheet	
Channel	: Percut River		Date	
Structure	: Br. P-1		Nos of sheet	
Station	: PE 57 +05 m		Prepared by	

Control stresses on pile
Earthquake Condition
III.1.7.2 Case - III Low Water Level

$$= \frac{2.87}{\text{stres on steel = fs}} \text{ kg/cm2} > 70 \text{ kg/cm2}$$

$$fs = \frac{M'}{ro^3} \times S \times n$$

$$= \frac{91,200}{8,000} \times 0.808 \times 5 \text{ kg/cm2}$$

$$= 11.400 \times 0.808 \times 5 \text{ kg/cm2}$$

$$= 45 \text{ kg/cm2}$$

teg-q

Project	: Medan Flood Control	Japan International Cooperation Agency (JICA)	Calculation sheet	
Channel	: Percut River		Date	
Structure	: Br. P−1		Nos of sheet	
Station	: PE 57 + 05		Prepared by	

III.1.8 Combined load at Abutment section

Normal Condition

III.1.8.1 Case − I, High Water Level

Ka	=	0.297		Ywet	=	1.850	t/m3
Ht	=	6.300	m	Ysat	=	2.000	t/m3
Yw	=	1.000	t/m3	q	=	1.000	t/m2
Yc	=	2.400	t/m3				

Description	Total load (ton)						
	Dead load	Line load	Uniform load	Pedestrian load	Total load	Nos of bearing	Width
Left side span	336.40	27.27	155.00	15.00	533.67	2.00	10.00
load per m width	16.820	1.364	7.750	0.750	26.684		

Section 1 − 1 H1 = 1.595 m W1 = 0.300 m

Load		Description							Vo	Ho	Xo	Yo	M = Vo.Yo
		Y	x	Hn	x	Wn	=	Weight					
		m		m		t/m3		ton	ton	ton	m	m	m
C1	=	2.40	x	1.595	x	0.30	=	1.148	1.148				
		q	x	H									
Pq	=	1.00	x	1.595			=	1.595		1.595		0.798	1.272
Pa1	0.5 x	Y	x	H1^2	x	Ka							
	= 0.5 x	1.85	x	2.54	x	0.297	=	0.699		0.699		0.532	
total									1.148	2.294			1.272

Section 2 − 2

H1	=	1.595 m	W1	=	0.30 m
H4	=	0.500 m	W4	=	0.55 m
H5	=	0.500 m	W5	=	0.55 m

Load		Description							Vo	Ho	Xo	Yo	M = Vo.Yo
		Ye	x	H	x	W	=	Weight					
		m		m		t/m3		ton	ton	ton	m	m	t.m
C1	=	2.40	x	1.595	x	0.30	=	1.148	1.148		0.150		0.172
C2	=	2.40	x	0.500	x	0.55	=	0.660	0.660		0.275		0.182
C3	= 0.5 x	2.40	x	0.500	x	0.55	=	0.330	0.330		0.275		0.091
E1	=	q	x	H	x	W							
	=	1.00	x	1.595	x	0.25	=	0.399	0.399		0.275		0.110
total									2.537				0.554

Section 3 − 3

H1	=	1.595 m	W1	=	0.300 m	H1 + H4	=	2.095 m
H2	=	1.000 m	W2	=	1.000 m	Pe	=	4.058 ton (by earthquake)
H4	=	0.500 m	W4	=	0.550 m	He=H4+H5	=	1.000 m
H5	=	0.500 m	W5	=	0.550 m			
H6	=	0.500 m	W6	=	0.200 m			
H7	=	0.500 m	W7	=	0.200 m			

mqh−1

Project	: Medan Flood Control	Japan International Cooperation Agency (JICA)	Calculation sheet	
Channel	: Percut River		Date	
Structure	: Br. P−1		Nos of sheet	
Station	: PE 57 + 05		Prepared by	

III.1.8 Combined load at Abutment section

Normal Condition

III.1.8.1 Case − I, High Water Level

Load		W	Description						Vo	Ho	Xo	Yo	M
		Y	x	H	x	W	=	Weight					
		m		m		t/m3		ton	ton	ton	m	m	t.m
C1	=	2.40	x	1.595	x	0.30	=	1.148	1.148				
C4	=	2.40	x	1.000	x	1.00	=	2.400	2.400				
C5	= 0.5 x	2.40	x	0.500	x	0.55	=	0.330	0.330				
C2	=	2.40	x	0.500	x	0.55	=	0.660	0.660				
C6	=	2.40	x	0.500	x	0.20	=	0.240	0.240				
C7	= 0.5 x	2.40	x	0.500	x	0.20	=	0.120	0.120				
Pe							=	4.058		4.058		1.00	4.058
Pq	=	1.00	x	2.095	x	0.20	=	0.419		0.419		1.048	0.439
Pa	= 0.5 x	1.85	x	2.095	x	0.297	=	0.576		0.576		0.698	0.402
Rv	=							26.684	26.684				
sum									31.582	5.053			4.899

Section 4 − 4

Top deck elv	=	8.853 m					
Hwl elv.	=	5.442 m					
Hwc elv.	=	4.742 m					
H back fill	=	Ht	−	H3			
	=	6.3	−	1.00	=	5.30 m	
Top footing elv.	=	8.853	−	5.300	=	3.553 m	
H wet soil	=	8.853	−	5.442	=	3.411 m	
H sat soil	=	5.3	−	3.411	=	1.889 m	

H1	=	1.595 m	W1	=	0.300 m			
H2	=	3.355 m	W2	=	1.000 m			
H4	=	0.500 m	W4	=	0.550 m			
H5	=	0.500 m	W5	=	0.550 m			
H6	=	0.500 m	W6	=	0.200 m			
H7	=	0.500 m	W7	=	0.200 m			
H wet	=	3.411	:	3	+	1.889	=	3.026 m

Load		Description							Vo	Ho	Xo	Yo	M = Ho.Yo
		Y	x	Hn	x	Wn		Weight					
		m		m		m		ton	ton	ton	m	m	t.m
C1	=	2.40	x	1.60	x	0.30	=	1.148	1.148				
C4	=	2.40	x	1.00	x	1.00	=	2.400	2.400				
C5	= 0.5 x	2.40	x	0.50	x	0.55	=	0.330	0.330				
C2	=	2.40	x	0.50	x	0.55	=	0.660	0.660				
C6	=	2.40	x	1.00	x	0.20	=	0.480	0.480				
C7	= 0.5 x	2.40	x	0.50	x	0.20	=	0.120	0.120				
Pe							=	4.058		4.058		3.355	13.615
Pq1	=	1.00	x	5.30	x	1.00	=	5.300		5.300		2.650	14.045
Pw1	= 0.5 x	1.85	x	11.635	x	0.297	=	3.196		3.196		4.840	15.471
Ps1	= 0.5 x	2.00	x	3.568	x	0.297	=	1.060		1.060		0.630	0.667
Ps2		2.00	x	1.889	x	0.297	=	1.122		1.122		0.945	1.060
Pwl	= 0.5 x	1.00	x	4.792	x	1.00	=	2.396		2.396		0.730	1.748
Pwr	= 0.5 x	1.00	x	3.568	x	1.00	=	(1.784)		(1.784)		0.630	(1.123)
Rv	=							26.684	26.684				
sum									31.822	15.348			45.482

mqh−1

Project	: Medan Flood Control
Channel	: Percut River
Structure	: Br. P-1
Station	: PE 57 + 05

Japan International Cooperation Agency (JICA)

Calculation sheet	
Date	
Nos of sheet	
Prepared by	

III.1.8 Combined load at Abutment section

Normal Condition

III.1.8.1 Case - I, High Water Level

Section 5 - 5

H1	=	0.300 m	W1	=	1.80 m	
H2	=	1.000 m	W2	=	1.80 m	
H wet.r	=	3.411 -	1.595	=	1.82 m	
H sat.r	=	1.889 m				

Load		Description							Vo	Ho	Xo	Yo	M = Vo.Xo
		Y	x	H	x	W	=	Weight					
		m		m		t/m3		ton	ton	ton	m	m	t.m
C1	=	0.5 x	2.40	x	0.30	x	1.80	=	0.648	0.648		0.600		0.389
C2	=		2.40	x	1.00	x	1.80	=	4.320	4.320		0.900		3.888
E1(wet)	=		1.85	x	1.82	x	1.80	=	6.047	6.047		0.900		5.443
E1(sat)	=		2.00	x	1.889	x	1.80	=	6.800	6.800		0.900		6.120
U1(up lift)	=		(1.00)	x	1.89	x	1.80	=	(3.400)	(3.400)		0.900		(3.060)
Rp 4								=	(23.730)	(23.730)		1.175		(27.883)
Rp 3								=	(26.120)	(26.120)		0.625		(16.325)
		total						=		(35.435)				(31.428)

Section 6 - 6

H 3.1	=	0.300 m	W1	=	2.30 m	
H 3.2	=	1.000 m	W2	=	2.30 m	
H wet	=	3.411 m				
H sat	=	1.889 m				

Load		Description							Vo	Ho	Xo	Yo	M = Vo.Xo
		Y	x	H	x	W	=	Weight					
		m		m		t/m3		ton	ton	ton	m	m	t.m
C 3.1	=	0.5 x	2.40	x	0.300	x	2.30	=	0.828	0.828		0.767		0.635
C 3.2	=		2.40	x	1.000	x	2.30	=	5.520	5.520		1.150		6.348
E1(wet)	=		1.85	x	3.411	x	2.30	=	14.514	14.514		1.150		16.691
E1(sat)	=		2.00	x	1.889	x	2.30	=	8.689	8.689		1.150		9.993
U1(up lift)	=		1.00	x	1.889	x	2.30	=	4.345	4.345		1.150		4.996
Rp 1								=	(32.410)	(32.410)		1.675		(54.287)
Rp 2								=	(29.260)	(29.260)		0.625		(18.288)
		total						=		(27.774)				(33.911)

mqh-1

roject	: Medan Flood Control
hannel	: Percut River
tructure	: Br. P-1
ation	: PE 57 + 05

Japan International Cooperation Agency (JICA)

Calculation sheet	
Date	
Nos of sheet	
Prepared by	

Normal Condition

III.1.8.2 Case - II, Low Water Level

Ka	=	0.297	Ywet	=	1.850	t/m3
Ht	=	6.300 m	Ysat	=	2.000	t/m3
Yw	=	1.000 t/m3	q	=	1.000	t/m2
Yc	=	2.400 t/m3				

Description	Total load (ton)						
	Dead load	Line load	Uniform load	Pedestrian load	Total load	Nos of bearing	Width
eft side span	336.40	27.27	155.00	15.00	533.67	2.00	10.00
oad per m width	16.820	1.364	7.750	0.750	26.684		

ection 1 - 1 H1 = 1.595 m W1 = 0.300 m

Load		Description							Vo	Ho	Xo	Yo	M = Vo.Yo
		Y	x	Hn	x	Wn	=	Weight					
		m		m		t/m3		ton	ton	ton	m	m	m
C1	=		2.40	x	1.595	x	0.30	=	1.148	1.148				
		q	x	H									
Pq	=		1.00	x	1.595			=	1.595		1.595		0.798	1.272
Pa1		0.5 x	Y	x	H1^2	x	Ka							
	=	0.5 x	1.85	x	2.54	x	0.297	=	0.699		0.699		0.532	
		total								1.148	2.294			1.272

ection 2 - 2

H1	=	1.595 m	W1	=	0.30 m	
H4	=	0.500 m	W4	=	0.55 m	
H5	=	0.500 m	W5	=	0.55 m	

Load		Description							Vo	Ho	Xo	Yo	M = Vo.Yo
		Yc	x	H	x	W	=	Weight					
		m		m		t/m3		ton	ton	ton	m	m	t.m
C1	=		2.40	x	1.595	x	0.30	=	1.148	1.148		0.150		0.172
C2	=		2.40	x	0.500	x	0.55	=	0.660	0.660		0.275		0.182
C3	=	0.5 x	2.40	x	0.500	x	0.55	=	0.330	0.330		0.275		0.091
E1	=		q	x	H	x	W							
	=		1.00	x	1.595	x	0.25	=	0.399	0.399		0.275		0.110
		total								2.537				0.554

ection 3 - 3

H1	=	1.595 m	W1	=	0.300 m	H1 + H4	=	2.095 m
H2	=	1.000 m	W2	=	1.000 m	Pe	=	4.058 ton (by earthquake)
H4	=	0.500 m	W4	=	0.550 m	He=H4+H5	=	1.000 m
H5	=	0.500 m	W5	=	0.550 m			
H6	=	0.500 m	W6	=	0.200 m			
H7	=	0.500 m	W7	=	0.200 m			

mqh-2

Project	: Medan Flood Control	Japan International Cooperation Agency (JICA)	Calculation sheet
Channel	: Percut River		Date
Structure	: Br. P−1		Nos of sheet
Station	: PE 57 + 05		Prepared by

Normal Condition

III.1.8.2 Case − II, Low Water Level

Load		Description W	Y	x	H	x	W	=	Weight	Vo	Ho	Xo	Yo	M
			m		m		t/m3		ton	ton	ton	m	m	t.m
C1	=		2.40	x	1.595	x	0.30	=	1.148	1.148				
C4	=		2.40	x	1.000	x	1.00	=	2.400	2.400				
C5	=	0.5 x	2.40	x	0.500	x	0.55	=	0.330	0.330				
C2	=		2.40	x	0.500	x	0.55	=	0.660	0.660				
C6	=		2.40	x	0.500	x	0.20	=	0.240	0.240				
C7	=	0.5 x	2.40	x	0.500	x	0.20	=	0.120	0.120				
Pe								=	4.058		4.058		1.00	4.058
Pq	=		1.00	x	2.095	x	0.20	=	0.419		0.419		1.048	0.439
Pa	=	0.5 x	1.85	x	2.095	x	0.297	=	0.576		0.576		0.698	0.402
Rv	=								26.684	26.684				
		sum								31.582	5.053			4.899

Section 4 − 4

Top deck elv	=	8.853	m				
Lwl elv.	=	0.2	m				
Hwe elv.	=	4.742	m				
H back fill	=	Ht	−	H3			
	=	6.3	−	1.00	=	5.30	m
Top footing elv.	=	8.853	−	5.300	=	3.553	m
H wet soil	=	8.853	−	3.553	=	5.300	m
H sat soil	=	5.3	−	5.3	=	0	m

H1	=	1.595	m	W1	=	0.300	m
H2	=	3.355	m	W2	=	1.000	m
H4	=	0.500	m	W4	=	0.550	m
H5	=	0.500	m	W5	=	0.550	m
H6	=	0.500	m	W6	=	0.200	m
H7	=	0.500	m	W7	=	0.200	m

H wet = 5.3 : 3 + 0 = 1.767 m

Load		Description Y	x	Hn	x	Wn	Weight	Vo	Ho	Xo	Yo	M = Ho.Yo
		m		m		m	ton	ton	ton	m	m	t.m
C1	=	2.40	x	1.60	x	0.30 =	1.148	1.148				
C4	=	2.40	x	1.00	x	1.00 =	2.400	2.400				
C5	= 0.5 x	2.40	x	0.50	x	0.55 =	0.330	0.330				
C2	=	2.40	x	0.50	x	0.55 =	0.660	0.660				
C6	=	2.40	x	1.00	x	0.20 =	0.480	0.480				
C7	= 0.5 x	2.40	x	0.50	x	0.20 =	0.120	0.120				
Pe						=	4.058		4.058		3.355	13.615
Pq1	=	1.00	x	5.30	x	1.00 =	5.300		5.300		2.650	14.045
Pw1	= 0.5 x	1.85	x	28.090	x	0.297 =	7.717		7.717		2.951	22.773
Ps1	= 0.5 x	2.00	x	0.000	x	0.297 =	0.000		0.000		0.000	0.000
Ps2		2.00	x	0	x	0.297 =	0.000		0.000		0.000	0.000
Pwl	= 0.5 x	1.00	x	0.090	x	1.00 =	0.045		0.045		0.100	0.005
Pwr	= 0.5 x	1.00	x	0.000	x	1.00 =	0.000		0.000		0.000	0.000
Rv	=						26.684	26.684				
	sum							31.822	17.120			50.437

mqh−2

roject	: Medan Flood Control	Japan International Cooperation Agency (JICA)	Calculation sheet
hannel	: Percut River		Date
tructure	: Br. P−1		Nos of sheet
ation	: PE 57 + 05		Prepared by

Normal Condition

III.1.8.2 Case − II, Low Water Level

ection 5 − 5

H1	=	0.300	m	W1	=	1.80	m
H2	=	1.000	m	W2	=	1.80	m
H wet.r	=	5.300	−	1.595	=	3.71	m
H sat.r	=	0.000	m				

Load		Description Y	x	H	x	W	=	Weight	Vo	Ho	Xo	Yo	M = Vo.Xo
		m		m		t/m3		ton	ton	ton	m	m	t.m
C1	=	0.5 x 2.40	x	0.30	x	1.80	=	0.648	0.648		0.600		0.389
C2	=	2.40	x	1.00	x	1.80	=	4.320	4.320		0.900		3.888
E1(wet)	=	1.85	x	3.71	x	1.80	=	12.338	12.338		0.900		11.104
E1(sat)	=	2.00	x	0.000	x	1.80	=	0.000	0.000		0.900		0.000
U1(up lift)	=	(1.00)	x	0.00	x	1.80	=	0.000	0.000		0.900		0.000
Rp 4							=	(27.620)	(27.620)		1.175		(32.454)
Rp 3							=	(29.320)	(29.320)		0.625		(18.325)
		total					=		(39.634)				(35.398)

ection 6 − 6

H3.1	=	0.300	m	W1	=	2.30	m
H3.2	=	1.000	m	W2	=	2.30	m
H wet	=	5.300	m				
H sat	=	0.000	m				

Load		Description Y	x	H	x	W	=	Weight	Vo	Ho	Xo	Yo	M = Vo.Xo
		m		m		t/m3		ton	ton	ton	m	m	t.m
C3.1	=	0.5 x 2.40	x	0.300	x	2.30	=	0.828	0.828		0.767		0.635
C3.2	=	2.40	x	1.000	x	2.30	=	5.520	5.520		1.150		6.348
E1(wet)	=	1.85	x	5.300	x	2.30	=	22.551	22.551		1.150		25.934
E1(sat)	=	2.00	x	0.000	x	2.30	=	0.000	0.000		1.150		0.000
U1(up lift)	=	1.00	x	0.000	x	2.30	=	0.000	0.000		1.150		0.000
Rp 1							=	(36.660)	(36.660)		1.675		(61.405)
Rp 2							=	(32.990)	(32.990)		0.625		(20.619)
		total					=		(40.751)				(49.107)

yqh−2

Project	: Medan Flood Control	Japan International Cooperation Agency (JICA)	Calculation sheet	
Channel	: Percut River		Date	
Structure	: Br. P-1		Nos of sheet	
Station	: PE 57 + 05		Prepared by	

Earthquake Condition

III.1.8.3 Case – III. High Water Level

Ka	=	0.407		Ywet	=	1.850	t/m3
Ht	=	6.300	m	Ysat	=	2.000	t/m3
Yw	=	1.000	t/m3	q	=	0.500	t/m2
Yc	=	2.400	t/m3				

Description	Total load (ton) Dead load	Line load	Uniform load	Pedestrian load	Total load	Nos of bearing	Width
Left side span	336.40	27.27	155.00	15.00	533.67	2.00	10.00
load per m width	16.820	1.364	7.750	0.750	26.684		

Section 1 – 1 H1 = 1.595 m W1 = 0.300 m

Load		Description Y (m)	x	Hn (m)	x	Wn (t/m3)	=	Weight (ton)	Vo (ton)	Ho (ton)	Xo (m)	Yo (m)	M = Vo.Yo (m)
C1	=	2.40	x	1.595	x	0.30	=	1.148	1.148				
		q	x	H									
Pq	=	0.50	x	1.595			=	0.798		0.798		0.798	0.636
Pa1		0.5 x	Y	x	H1^2	x	Ka						
	=	0.5 x	1.85	x	2.54	x	0.407	= 0.958		0.958		0.532	
		total							1.148	1.755			0.636

Section 2 – 2

H1	=	1.595 m	W1	=	0.30 m
H4	=	0.500 m	W4	=	0.55 m
H5	=	0.500 m	W5	=	0.55 m

Load		Description Yc (m)	x	H (m)	x	W (t/m3)	=	Weight (ton)	Vo (ton)	Ho (ton)	Xo (m)	Yo (m)	M = Vo.Yo (t.m)
C1	=	2.40	x	1.595	x	0.30	=	1.148	1.148		0.150		0.172
C2	=	2.40	x	0.500	x	0.55	=	0.660	0.660		0.275		0.182
C3	=	0.5 x 2.40	x	0.500	x	0.55	=	0.330	0.330		0.275		0.091
E1	=	q	x	H	x	W							
	=	0.50	x	1.595	x	0.25	=	0.199	0.199		0.275		0.055
		total							2.338				0.499

Section 3 – 3

H1	=	1.595 m	W1	=	0.300 m	H1 + H4	=	2.095 m
H2	=	1.000 m	W2	=	1.000 m	Pe	=	4.058 ton (by earthquake)
H4	=	0.500 m	W4	=	0.550 m	He=H4+H5	=	1.000 m
H5	=	0.500 m	W5	=	0.550 m			
H6	=	0.500 m	W6	=	0.200 m			
H7	=	0.500 m	W7	=	0.200 m			

mqh-3

Project	: Medan Flood Control	Japan International Cooperation Agency (JICA)	Calculation sheet	
Channel	: Percut River		Date	
Structure	: Br. P-1		Nos of sheet	
Station	: PE 57 + 05		Prepared by	

Earthquake Condition

III.1.8.3 Case – III. High Water Level

Load		W Description Y (m)	x	H (m)	x	W (t/m3)	=	Weight (ton)	Vo (ton)	Ho (ton)	Xo (m)	Yo (m)	M (t.m)
C1	=	2.40	x	1.595	x	0.30	=	1.148	1.148				
C4	=	2.40	x	1.000	x	1.00	=	2.400	2.400				
C5	=	0.5 x 2.40	x	0.500	x	0.55	=	0.330	0.330				
C2	=	2.40	x	0.500	x	0.55	=	0.660	0.660				
C6	=	2.40	x	0.500	x	0.20	=	0.240	0.240				
C7	=	0.5 x 2.40	x	0.500	x	0.20	=	0.120	0.120				
Pe							=	4.058		4.058		1.00	4.058
Pq	=	0.50	x	2.095	x	0.20	=	0.210		0.210		1.048	0.219
Pa	=	0.5 x 1.85	x	2.095	x	0.407	=	0.789		0.789		0.698	0.551
Rv	=							26.684	26.684				
		sum							31.582	5.056			4.828

Section 4 – 4

Top deck elv	=	8.853 m				
Hwl elv.	=	5.442 m				
Hwe elv.	=	4.742 m				
H back fill	=	Ht	–	H3		
	=	6.3	–	1.00	=	5.30 m
Top footing elv.	=	8.853	–	5.300	=	3.553 m
H wet soil	=	8.853	–	5.442	=	3.411 m
H sat soil	=	5.3	–	3.411	=	1.889 m

H1	=	1.595 m	W1	=	0.300 m
H2	=	3.355 m	W2	=	1.000 m
H4	=	0.500 m	W4	=	0.550 m
H5	=	0.500 m	W5	=	0.550 m
H6	=	0.500 m	W6	=	0.200 m
H7	=	0.500 m	W7	=	0.200 m

H wet = 3.411 : 3 + 1.889 = 3.026 m

Load		Description Y (m)	x	Hn (m)	x	Wn (m)	=	Weight (ton)	Vo (ton)	Ho (ton)	Xo (m)	Yo (m)	M = Ho.Yo (t.m)
C1	=	2.40	x	1.60	x	0.30	=	1.148	1.148				
C4	=	2.40	x	1.00	x	1.00	=	2.400	2.400				
C5	=	0.5 x 2.40	x	0.50	x	0.55	=	0.330	0.330				
C2	=	2.40	x	0.50	x	0.55	=	0.660	0.660				
C6	=	2.40	x	1.00	x	0.20	=	0.480	0.480				
C7	=	0.5 x 2.40	x	0.50	x	0.20	=	0.120	0.120				
Pe							=	4.058		4.058		3.355	13.615
Pq1	=	0.50	x	5.30	x	1.00	=	2.650		2.650		2.650	7.023
Pw1	=	0.5 x 1.85	x	11.635	x	0.407	=	4.380		4.380		4.840	21.200
Ps1	=	0.5 x 2.00	x	3.568	x	0.407	=	1.452		1.452		0.630	0.914
Ps2		2.00	x	1.889	x	0.407	=	1.538		1.538		0.945	1.452
Pwl	=	0.5 x 1.00	x	4.792	x	1.00	=	2.396		2.396		0.730	1.748
Pwr	=	0.5 x 1.00	x	3.568	x	1.00	=	(1.784)		(1.784)		0.630	(1.123)
Rv	=							26.684	26.684				
		sum							31.822	14.690			44.829

Project	: Medan Flood Control	Japan International Cooperation Agency (JICA)	Calculation sheet	
Channel	: Percut River		Date	
Structure	: Br. P-1		Nos of sheet	
Station	: PE 57 + 05		Prepared by	

Earthquake Condition

III.1.8.4 Case – IV, Low Water Level

Ka	=	0.407		Ywet	=	1.850	t/m3
Ht	=	6.300	m	Ysat	=	2.000	t/m3
Yw	=	1.000	t/m3	q	=	0.500	t/m2
Yc	=	2.400	t/m3				

Description	Total load (ton)						
	Dead load	Line load	Uniform load	Pedestrian load	Total load	Nos of bearing	Width
Left side span	336.40	27.27	155.00	15.00	533.67	2.00	10.00
load per m width	16.820	1.364	7.750	0.750	26.684		

Section 1 – 1 H1 = 1.595 m W1 = 0.300 m

Load		Description												M = Vo.Yo
		Y	x	Hn	x	Wn	=	Weight	Vo	Ho	Xo	Yo		
		m		m		t/m3		ton	ton	ton	m	m		m
C1	=			2.40	x	1.595	x	0.30	=	1.148	1.148			
		q	x	H										
Pq	=			0.50	x	1.595			=	0.798		0.798		0.798	0.636
Pa1		0.5	x	Y	x	H1^2	x	Ka						
	=	0.5	x	1.85	x	2.54	x	0.407	=	0.958		0.958		0.532	
total											1.148	1.755			0.636

Section 2 – 2

H1	=	1.595	m	W1	=	0.30 m
H4	=	0.500	m	W4	=	0.55 m
H5	=	0.500	m	W5	=	0.55 m

Load		Description												M = Vo.Yo
		Ye	x	H	x	W	=	Weight	Vo	Ho	Xo	Yo		
		m		m		t/m3		ton	ton	ton	m	m		t.m
C1	=			2.40	x	1.595	x	0.30	=	1.148	1.148		0.150		0.172
C2	=			2.40	x	0.500	x	0.55	=	0.660	0.660		0.275		0.182
C3	=	0.5	x	2.40	x	0.500	x	0.55	=	0.330	0.330		0.275		0.091
E1	=			q	x	H	x	W							
	=			0.50	x	1.595	x	0.25	=	0.199	0.199		0.275		0.055
total											2.338				0.499

Section 3 – 3

H1	=	1.595	m	W1	=	0.300 m	H1 + H4	=	2.095 m
H2	=	1.000	m	W2	=	1.000 m	Pe	=	4.058 ton (by earthquake)
H4	=	0.500	m	W4	=	0.550 m	He=H4+H5	=	1.000 m
H5	=	0.500	m	W5	=	0.550 m			
H6	=	0.500	m	W6	=	0.200 m			
H7	=	0.500	m	W7	=	0.200 m			

mqh-4

Project	: Medan Flood Control	Japan International Cooperation Agency (JICA)	Calculation sheet	
Channel	: Percut River		Date	
Structure	: Br. P-1		Nos of sheet	
Station	: PE 57 + 05		Prepared by	

Earthquake Condition

III.1.8.4 Case – IV, Low Water Level

Load		W		Description						Vo	Ho	Xo	Yo	M
		Y	x	H	x	W	=	Weight						
		m		m		t/m3		ton		ton	ton	m	m	t.m
C1	=			2.40	x	1.595	x	0.30	=	1.148	1.148			
C4	=			2.40	x	1.000	x	1.00	=	2.400	2.400			
C5	=	0.5	x	2.40	x	0.500	x	0.55	=	0.330	0.330			
C2	=			2.40	x	0.500	x	0.55	=	0.660	0.660			
C6	=			2.40	x	0.500	x	0.20	=	0.240	0.240			
C7	=	0.5	x	2.40	x	0.500	x	0.20	=	0.120	0.120			
Pe									=	4.058		4.058		4.058
Pq	=			0.50	x	2.095	x	0.20	=	0.210		0.210	1.00	0.219
Pa	=	0.5	x	1.85	x	2.095	x	0.407	=	0.789		0.789	1.048	0.551
Rv	=									26.684	26.684		0.698	
sum											31.582	5.056		4.828

Section 4 – 4

Top deck elv	=	8.853	m				
Lwl elv.	=	0.2	m				
Hwe elv.	=	4.742	m				
H back fill	=	Ht	–	H3			
	=	6.3	–	1.00	=	5.30	m
Top footing elv.	=	8.853	–	5.300	=	3.553	m
H wet soil	=	8.853	–	3.553	=	5.300	m
H sat soil	=	5.3	–	5.3	=	0	m

H1	=	1.595	m	W1	=	0.300	m		
H2	=	3.355	m	W2	=	1.000	m		
H4	=	0.500	m	W4	=	0.550	m		
H5	=	0.500	m	W5	=	0.550	m		
H6	=	0.500	m	W6	=	0.200	m		
H7	=	0.500	m	W7	=	0.200	m		
H wet	=	5.3	:	3	+	0	=	1.767	m

Load		Description								Vo	Ho	Xo	Yo	M = Ho.Yo
		Y	x	Hn	x	Wn		Weight						
		m		m		m		ton		ton	ton	m	m	t.m
C1	=			2.40	x	1.60	x	0.30	=	1.148	1.148			
C4	=			2.40	x	1.00	x	1.00	=	2.400	2.400			
C5	=	0.5	x	2.40	x	0.50	x	0.55	=	0.330	0.330			
C2	=			2.40	x	0.50	x	0.55	=	0.660	0.660			
C6	=			2.40	x	1.00	x	0.20	=	0.480	0.480			
C7	=	0.5	x	2.40	x	0.50	x	0.20	=	0.120	0.120			
Pe									=	4.058		4.058	3.355	13.615
Pq1	=			0.50	x	5.30	x	1.00	=	2.650		2.650	2.650	7.023
Pw1	=	0.5	x	1.85	x	28.090	x	0.407	=	10.575		10.575	2.951	31.207
Ps1	=	0.5	x	2.00	x	0.000	x	0.407	=	0.000		0.000	0.000	0.000
Ps2				2.00	x	0	x	0.407	=	0.000		0.000	0.000	0.000
Pwl	=	0.5	x	1.00	x	0.090	x	1.00	=	0.045		0.045	0.100	0.005
Pwr	=	0.5	x	1.00	x	0.000	x	1.00	=	0.000		0.000	0.000	0.000
Rv	=									26.684	26.684			
sum										31.822	17.328			51.849

mqh-4

Project : Medan Flood Control	Japan International Cooperation Agency (JICA)	Calculation sheet	
Channel : Percut River		Date	
Structure : Br. P-1		Nos of sheet	
Station : PE 57 + 05		Prepared by	

Earthquake Condition

III.1.8.4 Case – IV, Low Water Level

Section 5 – 5

H1 = 0.300 m W1 = 1.80 m

H2 = 1.000 m W2 = 1.80 m

H wet.r = 5.300 – 1.595 = 3.71 m

H sat.r = 0.000 m

Load		Description												
			Y	x	H	x	W	= Weight	Vo	Ho	Xo	Yo	M = Vo.Xo
			m		m		t/m3	ton	ton	ton	m	m	t.m
C1	=	0.5 x	2.40	x	0.30	x	1.80	= 0.648	0.648		0.600		0.389
C2	=		2.40	x	1.00	x	1.80	= 4.320	4.320		0.900		3.888
E1(wet)	=		1.85	x	3.71	x	1.80	= 12.338	12.338		0.900		11.104
E1(sat)	=		2.00	x	0.000	x	1.80	= 0.000	0.000		0.900		0.000
U1(up lift)	=		(1.00)	x	0.00	x	1.80	= 0.000	0.000		0.900		0.000
Rp 4								= (23.390)	(23.390)		1.175		(27.483)
Rp 3								= (24.750)	(24.750)		0.625		(15.469)
		total						=	(30.834)				(27.571)

Section 6 – 6

H 3.1 = 0.300 m W1 = 2.30 m

H 3.2 = 1.000 m W2 = 2.30 m

H wet = 5.300 m

H sat = 0.000 m

Load		Description												
			Y	x	H	x	W	= Weight	Vo	Ho	Xo	Yo	M = Vo.Xo
			m		m		t/m3	ton	ton	ton	m	m	t.m
C3.1	=	0.5 x	2.40	x	0.300	x	2.30	= 0.828	0.828		0.767		0.635
C3.2	=		2.40	x	1.000	x	2.30	= 5.520	5.520		1.150		6.348
E1(wet)	=		1.85	x	5.300	x	2.30	= 22.551	22.551		1.150		25.934
E1(sat)	=		2.00	x	0.000	x	2.30	= 0.000	0.000		1.150		0.000
U1(up lift)	=		1.00	x	0.000	x	2.30	= 0.000	0.000		1.150		0.000
Rp 1								= (44.060)	(44.060)		1.675		(73.801)
Rp 2								= (34.400)	(34.400)		0.625		(21.500)
		total						=	(49.561)				(62.383)

mqh-4

4.1.11 SUBSTRUCTURE (BRIDGE SPAN 19.0M)

Case-4: Bridge Width = 4.50 m

PRESTRESSED CONCRETE BRIDGE COMPUTATION
CHANNEL MEDAN FLOOD WAY
Br – Mf 7
Station : Fw 38 + 78

span
19.00

Width
4.5 m

II SUB STRUCTURE

Abutment

II.1 Neutral axis of Abutment
II.2 Earthquake coefficient
II.3 Axial forces on Abutment
II.4 Coulumb coefficient
II.5 Horizontal force
- II.5.1 Case – I,Normal condition (HWL)
- II.5.2 Case – II,Normal condition (LWL)
- II.5.3 Case – III,Earthquake condition (HWL)
- II.5.4 Case – IV,Earthquake condition (LWL)

II.6 Combined Load on Abutment
- II.6.1 Case – I,Normal condition (HWL)
- II.6.2 Case – II,Normal condition (LWL)
- II.6.3 Case – III,Earthquake condition (HWL)
- II.6.4 Case – IV,Earthquake condition (LWL)

Project : Medan Flood Control	Japan International Cooperation Agency (JICA)	Calculation sheet
Channel : Medan Flood Way		Date
Structure : Br – F7		Nos of sheet
Station : FW 38 + 78		Prepared by

II ABUTMENT

II.1 Neutral axis of Left Side Abutment

Top deck elvation	=	34.75	m						
Bottom footing elevation	=	28.45	m						
depth of abutment = Ht	=	6.30	m						
depth beam	=	0.90	m						
depth slab	=	0.245	m						
depth of beam to deck	=	1.145	m						
depth of beam and deck	=	0.900	+	0.245	=	1.145	m		
depth bearing pad					=	0.100	m		
depth back wall	=	1.145	+	0.100	=	1.245	m		
depth of footing	=	1.000	m						
depth of steam	=	6.300	–	1.245	–	1.000	=	4.055	m
Depth of back fill	=	1.245	+	4.055	=	5.300	m		

H1	=	1.245	m	W1	=	0.300	m
H2	=	4.055	m	Wf1	=	2.300	m
H3	=	1.000	m	Wf2	=	1.000	m
Ht	=	6.300	m	Wf3	=	1.800	m
				W3	=	5.100	m
H4	=	0.500	m	W4	=	0.550	m
H5	=	0.250	m	W5	=	0.550	m
H6	=	0.500	m	W6	=	0.200	m
H7	=	0.250	m	W7	=	0.200	m
H8	=	0.300	m	W8	=	0.300	m
H9	=	0.300	m	W9	=	1.800	m

A1	W1	=	0.300	X1 =	W1/2	+	W2	+	Wf3				
					0.150	+	1.000	+	1.800		=	2.950	m
	H1	=	1.245	Y1=	Ht	–	H1/2						
					6.300	–	0.623				=	5.678	m
A2	W2	=	1.800	X2 =	W2/2	+	Wf3						
					0.900	+	1.800				=	2.700	m
	H2	=	4.055	Y2=	H2/2	+	H3						
					2.028	+	1.000				=	3.028	m
A3	W3	=	5.100	X3 =	W3/2								
					2.550						=	2.550	m
	H3	=	1.000	Y3=	H3/2								
					0.500						=	0.500	m
A4	W4	=	0.550	X4 =	W4/2	+	W2	+	Wf3				
					0.275	+	1.800	+	1.800		=	3.875	m
	H4	=	0.500	Y4=	H2	–	H4/2	+	H3				
					4.055	–	0.500	+	1.000		=	4.555	m
A5	W5	=	0.550	X5 =	W5/3	+	W2	+	Wf3				
					0.183	+	1.800	+	1.800		=	3.783	m
	H5	=	0.250	Y5=	H2	–	H4/2	–	H5/3	+ H3			
					4.055	–	0.250	–	0.083	+ 1.000 =		4.722	m
A6	W6	=	0.200	X6 =	Wf3	–	W6/2						
					1.800	–	0.100				=	1.700	m
	H6	=	0.500	Y6=	H2	–	H6/2	+	H3				
					4.055	–	0.250	+	0.083		=	3.888	m
A7	W7	=	0.200	X7 =	Wf3	–	W7/3						
					1.800	–	0.067				=	1.733	m
	H7	=	0.250	Y7=	H2	–	H6/2	–	H7/3	+ H3			
					4.055	–	0.250	–	0.083	+ 1.000 =		4.722	m
A8	W8	=	2.300	X8 =	W8/3	+	Wf2	+	Wf3				
					0.767	+	1.000	+	1.800		=	3.567	m
	H8	=	0.300	Y8=	H8/3	+	H3						
					0.100	+	1.000				=	1.100	m

al–xy

A9	W9	=	1.800	X9 =	W9x2/3								
					1.200						=	1.200	m
	H9	=	0.300	Y9=	H9/3	+	H3						
					0.100	+	1.000				=	1.100	m

Wing wall

Hgw	=	1.200	m	H back fill	=	5.30	m
Ww1	=	3.00	m	Hw1	=	3.00	m
Ww2	=	2.30	m	Hw2	=	1.00	m
Ww3	=	0.70	m	Hw3	=	1.00	m
Ww4	=	2.30	m	Hw4	=	1.00	m
Ww5	=	2.30	m	Hw5	=	0.30	m

Ww1	Ww1	=	3.000	Xw1=	Ww1/2	+	W2	+	Wf3				
					1.500	+	1.000	+	1.800		=	4.300	m
	Hw1	=	3.000	Yw1=	Ht	–	Hw1/2						
					6.300	–	1.500				=	4.800	m
Ww2	Ww2	=	2.300	Xw2=	Ww2/2	+	W2	+	Wf3				
					1.150	+	1.000	+	1.800		=	3.950	m
	Hw2	=	1.000	Yw2=	Ht	–	Hw1	–	Hw2/2				
					6.300	–	3.000	–	0.500		=	2.800	m
Ww3	Ww3	=	0.700	Xw3=	W3	–	Ww3/2						
					5.100	–	0.350				=	4.750	m
	Hw3	=	1.000	Yw3=	Ht	–	Hw1	–	Hw3/2				
					6.300	–	3.000	–	0.333		=	2.967	m
Ww4	Ww4	=	2.300	Xw4=	Ww4/2	+	W2	+	Wf3				
					1.150	+	1.000	+	1.800		=	3.950	m
	Hw4	=	1.000	Yw4=	Hw4/2	+	Hw5	+	H3				
					0.500	+	0.300	+	1.000		=	1.800	m
Ww5	Ww5	=	2.300	Xw5=	W3	–	Ww5x2/3						
					5.100	–	1.533				=	3.567	m
	Hw5	=	0.300	Yw5=	Hw5/3	+	H3						
					0.100	+	1.000				=	1.100	m

Approach slab

Apr	Wapr	=	3.000	Xapr=	Wapr/2	+	W2	+	Wf3				
					1.500	+	1.000	+	1.800		=	4.300	m
	Hapr	=	0.200	Yapr=	Ht	–	H1	+	Hapr/2				
					6.300	–	1.245	+	0.100		=	5.155	m

Guide wall

Gw	Wgw	=	3.000	Xgw=	Wgw/2	+	W2	+	Wf3				
					1.500	+	1.000	+	1.800		=	4.300	m
	Hgw	=	1.200	Ygw=	Ht	+	Hgw/2						
					6.300	+	0.600				=	6.900	m

Asphalt

1/2

Ha = 0.05 m

Asp	Wasp	=	3.000	Xasp=	W9/2	+	W2	+	Wf3				
					1.500	+	1.000	+	1.800		=	4.300	m
	Hasp	=	0.050	Yasp=	Ht	–	Hasp/2						
					6.300	–	0.025				=	6.275	m

Back fill

a. In case High Water Level

Hwl elvation	=	32.300	m					
Lwl elvation	=	0.000	m					
Top deck elvation	=	34.750	m					
Base footing elv.	=	34.75	–	6.300	=	28.45	m	
Top footing elv.	=	28.45	+	1.00	=	29.45	m	
Depth of wet soil	=	H wet						
H wet.l	=	Top deck elv.	–	Hwl				
	=	34.750	–	32.300	=	2.450	m	
Bearing elv	=	34.75	–	1.245	=	33.505	m	
H wet.r	=	2.450	–	1.245	=	1.205		

al–xy

Depth of saturated soil

Hstr = 5.300 − 2.450 = 2.850 m

a.1 soil wet condition

wet.l	W wet.l	=	2.300	X1 =	W wet.l/2	+	W2	+	Wf3		
					1.150	+	1.000	+	1.800	=	3.950 m
	H wet.l	=	2.450	Y1 =	Ht	−	H wet.l/2				
					6.300	−	1.225			=	5.075 m
wet.r	W wet.r	=	1.800	X1 =	W wet.r/2						
					0.900					=	0.900 m
	H wet.r	=	1.205	Y1 =	H wet.r/2	+	H3				
					1.145	+	1.00			=	2.145 m

a.2 soil saturated condition

sat.l	W sat.l	=	2.300	X1 =	W sat.l/2	+	W2	+	Wf3		
					1.150	+	1.000	+	1.800	=	3.950 m
	H sat.l	=	2.850	Y1 =	H sat.l/2	+	H3				
					1.425	+	1.000			=	2.425 m
sat.r	W sat.r	=	1.800	X2 =	W sat.r/2						
					0.900					=	0.900 m
	H sat.r	=	2.850	Y2 =	H sat.r/2	+	H3				
					1.425	+	1.000			=	2.425 m

b. In case Low Water Level

Depth of wet soil = Top elv. − Top footing elv.

H wet = 34.750 − 29.450 = 5.300 m

Depth of saturated soil

Hstr = 5.300 − 5.300 = 0.000 m

b.1 soil wet condition

Depth of back fill Rs = Hwc elv − Top foooting elv.

= 0 − 0

= 0 m

wet−l/s	Wsw.2	=	2.300	X1 =	Wsw.2/2	+	W2	+	Wf3		
					1.150	+	1.800	+	1.800	=	4.750 m
	Hsw.2	=	5.300	Y1 =	Hsw.2/2	+	H3				
					2.650	+	1.000			=	3.650 m
wet−r/s	Wsw.3	=	1.800	X2 =	Wsw.3/2						
					0.900					=	0.900 m
	Hsw.3	=	0.000	Y2 =	Hsw.3/2	+	H3				
					0.00	+	1.000			=	1.000 m

b.2 soil saturated condition

sat−l/s	W bf3	=	no portion of abutment up of low water level
	H bf3	=	

al−xy

Project : Medan Flood Control	Japan International	Calculation sheet
Channel : Medan Flood Way	Cooperation Agency	Date
Structure : Br − F7	(JICA)	Nos of sheet
Station : FW 38 + 78 m		Prepared by

II.2 Axial load to Abutment

a. Superstucture

Vertical load/m'

Length of Abutment = 5.50 m

Depth of abutment = 6.30 m

Width of footing = 5.10 m

Vertical load on abutment :

	Dead load ton	Line load ton	Uniform load ton	Pedestri load ton	=	Total load ton
total	147.74	24.00	53.20	11.40	=	236.340
per Abt.	73.87	12.00	26.60	5.70	=	118.170
per m'	13.43	2.18	4.84	1.04	=	21.485

Siesmic coeffici = 0.15

Horizontal load

Heq = 0.150 x Rdl

= 0.150 x 13.431

= 2.015 ton/m'

Acting point of siesmic load

Wf3 = 1.80 m

H3 = 1.00 m

X = 0.300 + WF3

= 0.300 + 1.80

= 2.100 m

Y = H2 + H3

= 4.055 + 1.00

= 5.055 m

b. Abutment section

Self weight

Sec−tion	width m	depth m	length m	nos	Yc t/m3	G / m'	Gv/m' m3	X m	Y m	G.X m3	G.Y m3
A1	0.30	1.945	1.00	1.00	2.40	1.400	1.400	2.950	5.678	4.131	4.131
A2	1.00	4.055	1.00	1.00	2.40	9.732	9.732	2.300	3.028	22.384	22.384
A3	5.10	1.00	1.00	1.00	2.40	12.240	12.240	2.550	0.500	31.212	31.212
A4	0.55	0.50	1.00	1.00	2.40	0.660	0.660	3.075	4.555	2.030	2.030
A5	0.55	0.25	1.00	1.00	2.40	0.165	0.165	2.983	4.722	0.492	0.492
A6	0.20	0.50	1.00	1.00	2.40	0.240	0.240	1.700	3.888	0.408	0.408
A7	0.20	0.50	1.00	1.00	2.40	0.120	0.120	1.733	4.722	0.208	0.208
A8	2.30	0.30	1.00	1.00	2.40	0.828	0.828	4.333	1.100	3.588	3.588
A9	1.80	0.30	1.00	1.00	2.40	0.648	0.648	1.200	1.100	0.778	0.778
					sum		26.03			65.23	65.23

Wing wall and guard wall

Ww1	3.000	3.000	0.40	2.00	2.400	3.142	0.571	4.300	4.800	2.456	2.456
Ww2	2.300	1.000	0.40	2.00	2.400	0.803	0.146	3.950	2.800	0.577	0.409
Ww3	0.400	1.000	0.40	2.00	2.400	0.140	0.025	5.333	2.967	0.135	0.075
Ww4	2.300	1.000	0.40	2.00	2.400	0.803	0.146	3.950	1.800	0.577	0.263
Ww5	2.300	0.300	0.40	2.00	2.400	0.241	0.044	0.533	1.100	0.023	0.048
Gw	3.000	1.20	0.40	2.00	2.000	1.047	0.190	4.300	6.900	0.819	1.314
					sum		0.932			3.768	3.251

Miscellaneous load

Aproaach Road,Guide wall and Asphalt

Aps	3.00	0.20	1.00	1.00	2.400	1.44	1.440	4.300	5.155	6.192	7.423
asp	3.00	0.05	1.00	1.00	2.300	0.35	0.345	4.300	6.275	1.483	2.165
					sum		1.785			7.675	9.588
					total		28.751			76.67	76.07

axl−lod

Centre of gravity

X = Gv/m'.X / Gv/m'			Y = Gv/m'.Y / Gv/m'		
	76.674 / 28.751 =	2.667 m		78.069 / 28.751 =	2.715 m

H-abt = 0.150 x 28.751 = 4.313 ton

c. Back fill

a. Incase High Water level

Depth of back fill = 5.300 m
H wet.l = 5.300 m
H wet.r = 3.355 m
H saturated = 0.000 m

Section	width m	depth m	length m	nos	Yc t/m3	G / m'	Gv/m' m3	X m	Y m	G.X m3	G.Y m3
Wet.l	2.300	5.300	1.00	1.00	1.850	22.551	22.551	3.950	5.075	89.08	114.45
Wet.r	1.800	3.355	1.00	1.00	1.850	11.172	11.172	0.900	2.145	10.05	23.96
Sat.l	2.300	0.000	1.00	1.00	2.000	0.000	0.000	3.950	2.425	0.000	0.000
Sat.r	1.800	0.000	1.00	1.00	2.000	0.000	0.000	0.900	2.425	0.000	0.000
					sum		33.724			99.133	138.413

X = Gv/m'.X / Gv/m'			Y = Gv/m'.Y / Gv/m'		
	99.133 / 33.724 =	2.940 m		138.413 / 33.724 =	4.104 m

H-abt = 0.150 x 33.724 = 5.059 ton

b. Low water level

Depth of Hwet.l = 5.300 m
Depth of Hwet.r = 3.355 m
Depth of H saturated = 0.000 m

a. Wet condition

Section	width m	depth m	length m	nos	Yc t/m3	G / m'	Gv/m' m3	X m	Y m	G.X m3	G.Y m3
Wet.l	2.300	5.300	1.00	1.00	1.850	22.551	22.551	4.750	3.650	107.120	82.313
Wet.r	1.800	3.355	1.00	1.00	1.850	11.172	11.172	0.900	1.000	10.055	11.172
Sat.l	2.300	0.000	1.00	1.00	2.000	0.000	0.000	3.950	0.000	0.000	0.000
Sat.r	1.800	0.000	1.00	1.00	2.000	0.000	0.000	0.900	0.000	0.000	0.000
					sum		33.724			117.175	93.485

Habt 0.150 x ******* = 5.059 ton

Centre of gravity

X = Gv/m'.X / Gv/m'			Y = Gv/m'.Y / Gv/m'		
	117.17 / 33.724 =	3.475 m		93.49 / 33.724 =	2.772 m

axl-lod

4 - 374

Project : Medan Flood Contr Channel : Medan Flood Way Structure: Br – F 7 Station : Fw 38 + 78	Japan International Cooperation Agency (JICA)	Calculation sheet Date Nos of sheet Prepared by

II.3 Lateral earth pressure due to earthquake

Kh = C x I x S

Kh = coefficient of horizontal siesmic loading

C = the base shear coefficient,base on the data :
siesmic zone and soil condition

Siesmic zone = 4

soil condition soft soil C = 0.15

S = the structure type factor = 1

I = the importance factor

for bridge carrying more than
2.000 vehicle per day

I = 1.2

C	I	S	kh
0.15	1.2	1	0.18

for all other permanent bridge

I = 1

C	I	S	kh
0.15	1	1	0.15

for temporary bridge

I = 0.8

C	I	S	kh
0.15	0.8	1	0.12

soil condition firm soil C = 0.10

for bridge carrying more than
2.000 vehicle per day

C	I	S	kh
0.1	1.2	1	0.12

for all other permanent bridge

C	I	S	kh
0.1	1.00	1	0.10

for temporary bridge

C	I	S	kh
0.1	0.8	1	0.08

source,Bridge Management System

EQ

Project : Medan Flood Control Channel : Medan Flood Way Structure : Br – F 7 Station : Fw 38 + 78	Japan International Cooperation Agency (JICA)	Calculation sheet Date Nos of sheet Prepared by	

II.4 Columb's coefficient

Right side Abutment

Normal condition

ø	=	30.00	deg.	ø – alpa	=	30.00	–	0.0	= 30.00	deg.
alpa	=	0.0	deg.	ø + delta	=	30.00	+	30.00	= 60.00	deg.
Q	=	0.0	deg.	ø – beta	=	30.00	–	0.0	= 30.00	deg.
delta	=	30.00	deg.	alpa + delta	=	0.0	+	30.00	= 30.00	deg.
beta	=	0.0	deg.	alpa – beta	=	0.0	–	0.000	= 0.00	deg.

$$Ka = \frac{\text{Cos}^2(ø - \text{alpa})}{\text{Cos}^2\text{alpa}.\cos(\text{alpa}+\text{delta}).\left\{\left(1+\sqrt{\frac{\sin(ø+\text{delta}).\sin(Ø-\text{beta})}{\cos(\text{alpa}+\text{delta}).\cos(\text{alpa}-\text{beta})}}\right)\right\}^2}$$

Cos(alpa)	=	1.000		sin(ø + delta)	=	0.866		
Cos^2 (alpa)	=	1.000		sin(ø – beta)	=	0.500		
Cos(ø – alpa)	=	0.866		cos(alpa + delta)	=	0.866		
Cos^2 (ø – alpa)	=	0.750		cos(alpa – beta)	=	1.000		
A	=	sin(ø+delta).sin(ø–beta)		B	=	cos (alpa + delta).cos(alpa–beta)		
	=	0.866	x 0.500		=	0.866	+ 1.000	
	=	0.433			=	0.866		
C	=	cos^2 (alpa).cos(alpa+delta)		@sqrt(A/I	=	0.71		
	=	1.000	x 0.866					
	=	0.866						
D	=	(1 + @sqrt(A/B) ^2		C.D	=	0.866	x 2.914	
	=	(1.000	+ 0.707) ^2		=	2.524		
	=	2.914						

$$Ka = \frac{\text{Cos}^2(ø-\text{alpa})}{\text{C.D}} = \frac{0.75}{2.52} = 0.297$$

Earth quake condition

$$Ke = \frac{\text{Cos}(ø - \text{alpa} - Qo)^2}{\text{Cos Qo.Cos}^2\text{alpa}.\cos(\text{alpa}+\text{delta}^{\wedge}+Qo).\left\{\left(1+\sqrt{\frac{\sin(ø+\text{delta}).\sin(Ø-\text{beta}-Qo)}{\cos(\text{alpa}+\text{delta}+Qo).\cos(\text{alpa}-\text{beta})}}\right)\right\}^2}$$

Qo = composite siesmic angle

$$k' = \tan^{-1}.k = \frac{Y}{Y-1} \times k$$

k = siesmic coefficient in air

	=	0.15
Y	=	2.00
Y – 1	=	1.00

$$k' = \frac{Y}{Y-1} \times k = \frac{2.00}{1.00} \times 0.15 = 0.30$$

Qo	=	@atan^–1.k								
Qo	=	8.5308								
ø	=	30.00	deg.	ø – alpa–Qo	=	30.00	– 0.00	– 8.53	=	21.47
alpa	=	0.00	deg.	ø + delta	=	30.00	+ 15.00		=	45.00
Q	=	8.53	deg.	ø – beta–Qo	=	30.00	– 0.00	– 8.53	=	21.47
delta	=	15.00	deg.	ø – beta + Qo	=	30.00	– 0.00	+ 8.53	=	38.53
beta	=	0.00	deg.	alpa + delta+Qo	=	0.00	+ 15.00	+ 8.53	=	23.53
				alpa – beta	=	0.000	– 0.000		=	0.00
Cos(Qo)	=	0.989								
Cos(alpa)	=	1.000		sin(ø + delta)	=	0.707				
Cos^2 (alpa)	=	1.000		sin(ø – beta – (	=	0.366				
Cos(ø – alpa – Qo)	=	0.931		cos(alpa + delta	=	0.917				
Cos^2 (ø – alpa–Qo) ^2	=	0.866		cos(alpa – beta)	=	1.000				
A	=	sin(ø+delta).sin(ø–beta–Qo)								
	=	0.707	x 0.366							
	=	0.259								
B	=	cos (alpa + delta+Qo).cos(alpa–beta)								
	=	0.917	+ 1.000							
	=	0.917								
C	=	cos Qo.Cos^2(alpa).cos(alpa+delta+Qo)								
	=	0.989	x 1.000	x 0.92						
	=	0.907								
@sqrt(A/B)	=	0.531								
D	=	(1 + @sqrt(A/B) ^2								
	=	(1.000	+ 0.531) ^2							
	=	2.345								
C.D	=	0.907	x 2.345							
	=	2.126								

$$Ke = \frac{\text{Cos}^2(ø-\text{alpa})}{\text{C.D}} = \frac{0.87}{2.126} = 0.407$$

colum

colum

Project : Medan Flood Control	Japan International Cooperation Agency (JICA)	Calculation sheet	
Channel : Medan Flood Way		Date	
Structure : Br – F7		Nos of sheet	
Station : FW 38 + 78		Prepared by	

II.5 Horizontal force at Abutment

II.5.1 Case – I,Normal Condition (HWL)

Depth of abutment	=	6.300	m				
Surcharge load	=	1.000	t/m2				
Unit weight wet soil	=	1.850	t/m3				
Unit weight saturated soil	=	2.000	t/m3				
Unit weight of water	=	1.000	t/m3				
Width of footing							
Wf1	=	2.300	m				
Wf2	=	1.000	m				
Wf3	=	1.800	m				
W3	=	5.100	m				
Elevation of LWL	=	26.500	m				
Elevation of HWL	=	32.300	m				
Top slab elevation	=	34.750	m				
Depth of footing	=	1.000	m				
Elv.of base footing	=	34.750	–	6.300	=	28.450	m
Elv.of top footing	=	28.450	+	1.000	=	29.450	m
Depth of back fill	=	34.750	–	29.450	=	5.300	m

Depth of wet soil = H wet

H wet	=	Top elv.	–	Hwl elv.			
H wet	=	34.750	–	32.300	=	2.450	m

Depth of saturated soil = H sat

H sat	=	5.300	–	2.450	=	2.850	m

A Active earth pressure
By live load
Surcharge load = (q)

q	=	1.000 t/m2	Sin(alpha)		=	0.000	
delta	=	0.000	L (length)		=	1.000	m
alpa	=	0.000	H (depth)		=	6.300	m
Cos(alpha)	=	1.000	B (width of footing)		=	5.100	m

oefficient of active pressure ,normal condition

Ka = 0.297

Pq	=	q	x	H	x	L	x	Ka
Pq	=	1.000	x	5.300	x	1.000	x	0.297
Pq	=	1.574 ton						

Pqv	=	Hq	x	Sin(alpha)
	=	1.574	x	0.000
	=	0.000 ton		
X	=	5.100 m		
Pqh	=	Hq	x	Cos(alpha)
	=	1.574	x	1.000
	=	1.574 ton		
Y	=	5.300	:	2.000
	=	2.650 m		

B By earth

B–1 Wet soil

Length = 1.000 m
Hwet = 2.450 m
Hsat = 2.850 m

1. Load triangular

Pw	=	0.500	x	Ywet	x	Hwet^2	x	L	x	Ka
	=	0.500	x	1.850	x	6.003	x	1.000	x	0.297
	=	1.649 ton								

Pw(v)	=	Pw	x	Sin(alpha)	Pw(h)	=	Pw	x	Cos(alpha)	
	=	1.649	x	0.000		=	1.649	x	1.000	
	=	0.000 ton				=	1.649	ton		
X	=	5.100 m			Y	=	2.450	:	3.000	+ 2.850
						=	3.667	m		

B–2 Saturated

H sat = 2.850 m

2. Load rectangular

Ps1	=	Ysat	x	H sat	x	L	x	Ka
	=	2.000	x	2.850	x	1.000	x	0.297
	=	1.693 ton						

Ps1(v)	=	H sat	x	Sin(alpha)	Ps1(h)	=	H sat	x	Cos(alpha)
	=	1.693		0.000		=	1.693	x	1.000
	=	0.000 ton				=	1.693	ton	
X	=	5.100 m			Y	=	2.850	:	2.000
						=	1.425	m	

3. Load trianngular

Ps2	=	0.500	x	Ysat	x	H sat^2	x	L	x	Ka
	=	0.500	x	2.000	x	8.122	x	1.000	x	0.297
	=	2.412 ton								

Ps2(v)	=	H sat–2	x	Sin(alpha)	Ps2(h)	=	H sat–2	x	Cos(alpha)	
	=	2.412	x	0.000		=	2.412	x	1.000	
	=	0.000 ton				=	2.412	ton		
X	=	5.100 m			Y	=	2.850	:	3.000	
						=	0.950	m		

4. Water

Hw = 2.850 m

Pw in	=	0.500	x	Yw	x	Hw^2	x	L
	=	0.500	x	1.000	x	8.122	x	1.000
	=	4.061 ton						
X	=	5.100 m						
Y	=	2.850	:	3.000				
	=	0.950 m						

Hw = 3.150 m

Pw out	=	0.500	x	Yw	x	Hw^2	x	L
	=	0.500	x	1.000	x	9.922	x	1.000
	=	4.961 ton						
X	=	0.950 m						
Y	=	3.150	:	3.000				
	=	1.050 m						

5. Uplife HWL

B = 5.100 m

Pu	=	Hw	x	B	x	Yw		
	=	2.850	x	5.100	x	1.000		
	=	14.535 ton/m'						
X	=	5.100	:	2.000				
	=	2.550 m						

Project : Medan Flood Control	Japan International Cooperation Agency (JICA)	Calculation sheet	
Channel : Medan Flood Way		Date	
Structure : Br – F7		Nos of sheet	
Station : FW 38 + 78		Prepared by	

II.5.2 Case – II Normal condition (LWL)

Depth of abutment	=	6.300	m					
Surcharge load	=	1.000	t/m2					
Unit weight wet soil	=	1.850	t/m3					
Unit weight saturated soil	=	2.000	t/m3					
Unit weight of water	=	1.000	t/m3					
Width of footing								
Wf1	=	2.300	m					
Wf2	=	1.000	m					
Wf3	=	1.800	m					
W3	=	5.100	m					
Elevation of LWL	=	26.500	m					
Elevation of HWL	=	32.300	m					
Top slab elevation	=	34.750	m					
Depth of footing	=	1.000	m					
Elv.of base footing	=	34.750	–	6.300	=	28.450	m	
Elv.of top footing	=	28.450	+	1.000	=	29.450	m	
Depth of back fill	=	34.750	–	29.450	=	5.300	m	
Depth of wet soil = H wet								
H wet	=	Top elv.	–	Lwl elv.				
H wet	=	34.75	–	26.500	=	8.250	m	under footing
	=	34.750	–	29.450	=	5.300	m	
Depth of saturated soil	=	H sat						
H sat	=	5.300	–	5.300	=	0.000	m	

A Active earth pressure
By live load
Surcharge load = (q)

q	=	1.000 t/m2	Sin(alpha)		=	0.000	
delta	=	0.000	L (length)		=	1.000	m
alpa	=	0.000	H (depth)		=	6.300	m
Cos(alpha)	=	1.000	B (width of footing)		=	5.100	m

oefficient of active pressure ,normal condition

Ka = 0.297

Pq = q x H x L x Ka
Pq = 1.000 x 5.300 x 1.000 x 0.297
Pq = 1.574 ton

Pqv = Hq x Sin(alpha)
= 1.574 x 0.000
= 0.000 ton
X = 5.100 m
Pqh = Hq x Cos(alpha)
= 1.574 x 1.000
= 1.574 ton
Y = 5.300 : 2.000
= 2.650 m

B By earth

B–1 Wet soil
Length = 1.000 m
Hwet = 5.300 m
Hsat = 0.000 m

1. Load trianngular

Pw = 0.500 x Ywet x Hwet^2 x L x Ka
= 0.500 x 1.850 x 28.090 x 1.000 x 0.297
= 7.717 ton

Pw(v)	=	Pw	x	Sin(alpha)	Pw(h)	=	Pw	x	Cos(alpha)	
	=	7.717	x	0.000		=	7.717	x	1.000	
	=	0.000	ton			=	7.717	ton		
X	=	5.100	m		Y	=	5.300	:	3.000 +	0.000
						=	1.767	m		

B–2 Saturated

H sat = 0.000 m

2. Load rectangular

Ps1 = Ysat x H sat x L x Ka
= 2.000 x 0.000 x 1.000 x 0.297
= 0.000 ton

Ps1(v)	=	H sat	x	Sin(alpha)	Ps1(h)	=	H sat	x	Cos(alpha)	
	=	0.000		0.000		=	0.000	x	1.000	
	=	0.000	ton			=	0.000	ton		
X	=	5.100	m		Y	=	0.000	:	2.000	
						=	0.000	m		

3. Load trianngular

Ps2 = 0.500 x Ysat x H sat^2 x L x Ka
= 0.500 x 2.000 x 0.000 x 1.000 x 0.297
= 0.000 ton

Ps2(v)	=	H sat–2	x	Sin(alpha)	Ps2(h)	=	H sat–2	x	Cos(alpha)	
	=	0.000	x	0.000		=	0.000	x	1.000	
	=	0.000	ton			=	0.000	ton		
X	=	5.100	m		Y	=	0.000	:	3.000	
						=	0.000	m		

4. Water

Hw = 0.000 m

Pw in = 0.500 x Yw x Hw^2 x L
= 0.500 x 1.000 x 0.000 x 1.000
= 0.000 ton

X = 5.100 m
Y = 0.000 : 3.000
= 0.000 m

ERR

Hw = 0.300 m

Pw out = 0.500 x Yw x Hw^2 x L
= 0.500 x 1.000 x 0.090 x 1.000
= 0.045 ton

X = 0.000 m
Y = 0.300 : 3.000
= 0.100 m

5. Uplife HWL

B = 5.100 m

Pu = Hw x B x Yw
= 0.000 x 5.100 x 1.000
= 0.000 ton/m²

X = 5.100 : 2.000
= 2.550 m

fh-2

Project	: Medan Flood Control	Japan International Cooperation Agency (JICA)	Calculation sheet
Channel	: Medan Flood Way		Date
Structure	: Br – F7		Nos of sheet
Station	: FW 38 + 78		Prepared by

Horizontal force at Abutment

II.5.3 Case–III Earthquake condition(HWL)

Depth of abutment	=	6.300	m				
Surcharge load	=	0.500	t/m2				
Unit weight wet soil	=	1.850	t/m3				
Unit weight saturated soil	=	2.000	t/m3				
Unit weight of water	=	1.000	t/m3				
Width of footing							
Wf1	=	2.300	m				
Wf2	=	1.000	m				
Wf3	=	1.800	m				
W3	=	5.100	m				
Elevation of LWL	=	26.500	m				
Elevation of HWL	=	32.300	m				
Top slab elevation	=	34.750	m				
Depth of footing	=	1.000	m				
Elv.of base footing	=	34.750	–	6.300	=	28.450	m
Elv.of top footing	=	28.450	+	1.000	=	29.450	m
Depth of back fill	=	34.750	–	29.450	=	5.300	m

Depth of wet soil = H wet

H wet	=	Top elv.	–	Hwl elv.			
H wet	=	34.750	–	32.300	=	2.450	m
Depth of saturated soil	=	H sat					
H sat	=	5.300	–	2.450	=	2.850	m

A Active earth pressure

By live load

Surcharge load = (q)

q	=	0.500 t/m2	Sin(alpha)	=	0.000	
delta	=	0.000	L (length)	=	1.000	m
alpa	=	0.000	H (depth)	=	6.300	m
Cos(alpha)	=	1.000	B (width of footing)	=	5.100	m

oefficient of active pressure ,normal condition

Ke = 0.407

Pq = q x H x L x Ke

Pq = 0.500 x 5.300 x 1.000 x 0.407

Pq = 1.079 ton

Pqv = Hq x Sin(alpha)

= 1.079 x 0.000

= 0.000 ton

X = 5.100 m

Pqh = Hq x Cos(alpha)

= 1.079 x 1.000

= 1.079 ton

Y = 5.300 : 2.000

= 2.650 m

B By earth

B–1 Wet soil

Length = 1.000 m

Hwet = 2.450 m

Hsat = 2.850 m

1. Load trianngular

Pw = 0.500 x Ywet x Hwet^2 x L x Ke

= 0.500 x 1.850 x 6.003 x 1.000 x 0.407

= 2.260 ton

Pw(v)	=	Pw	x Sin(alpha)	Pw(h)	=	Pw	x Cos(alpha)
	=	2.260	x 0.000		=	2.260	x 1.000
	=	0.000	ton		=	2.260	ton
X	=	5.100	m	Y	=	2.450 : 3.000 + 2.850	
					=	3.667	m

B–2 Saturated

H sat = 2.850 m

2. Load rectangular

Ps1 = Ysat x H sat x L x Ke

= 2.000 x 2.850 x 1.000 x 0.407

= 2.320 ton

Ps1(v)	=	H sat	x Sin(alpha)	Ps1(h)	=	H sat	x Cos(alpha)
	=	2.320	0.000		=	2.320	x 1.000
	=	0.000	ton		=	2.320	ton
X	=	5.100	m	Y	=	2.850 : 2.000	
					=	1.425	m

3. Load trianngular

Ps2 = 0.500 x Ysat x H sat^2 x L x Ke

= 0.500 x 2.000 x 8.122 x 1.000 x 0.407

= 3.306 ton

Ps2(v)	=	H sat–2	x Sin(alpha)	Ps2(h)	=	H sat–2	x Cos(alpha)
	=	3.306	x 0.000		=	3.306	x 1.000
	=	0.000	ton		=	3.306	ton
X	=	5.100	m	Y	=	2.850 : 3.000	
					=	0.950	m

4. Water

Hw = 2.850 m

Pw in = 0.500 x Yw x Hw^2 x L

= 0.500 x 1.000 x 8.122 x 1.000

= 4.061 ton

X = 5.100 m

Y = 2.850 : 3.000

= 0.950 m

Hw = 3.150 m

Pw out = 0.500 x Yw x Hw^2 x L

= 0.500 x 1.000 x 9.922 x 1.000

= 4.961 ton

X = 0.950 m

Y = 3.150 : 3.000

= 1.050 m

5. Uplife HWL

B = 5.100 m

Pu = Hw x B x Yw

= 2.850 x 5.100 x 1.000

= 14.535 ton/m'

X = 5.100 : 2.000

= 2.550 m

Project : Medan Flood Control Channel : Medan Flood Way Structure : Br – F7 Station : FW 38 + 78	Japan International Cooperation Agency (JICA)	Calculation sheet Date Nos of shee Prepared by

Horizontal force at Abutment
II.5.4 Earthquake condition

Depth of abutment	=	6.300	m			
Surcharge load	=	0.500	t/m2			
Unit weight wet soil	=	1.850	t/m3			
Unit weight saturated soil	=	2.000	t/m3			
Unit weight of water	=	1.000	t/m3			
Width of footing						
Wf1	=	2.300	m			
Wf2	=	1.000	m			
Wf3	=	1.800	m			
W3	=	5.100	m			
Elevation of LWL	=	26.500	m			
Elevation of HWL	=	32.300	m			
Top slab elevation	=	34.750	m			
Depth of footing	=	1.000	m			
Elv.of base footing	=	34.750	–	6.300	= 28.450	m
Elv.of top footing	=	28.450	+	1.000	= 29.450	m
Depth of back fill	=	34.750	–	29.450	= 5.300	m

Depth of wet soil = H wet

H wet = Top elv. – Lwl elv.

H wet = 34.75 – 26.500 = 8.250 m under footing

= 34.750 – 29.450 = 5.300 m

Depth of saturated soil = H sat

H sat = 5.300 – 5.300 = 0.000 m

A Active earth pressure
By live load
Surcharge load = (q)

q	=	0.500 t/m2	Sin(alpha)	=	0.000	
delta	=	0.000	L (length)	=	1.000	m
alpa	=	0.000	H (depth)	=	6.300	m
Cos(alpha)	=	1.000	B (width of footing)	=	5.100	m

oefficient of active pressure ,normal condition

Ke = 0.407

Pq = q x H x L x Ke

Pq = 0.500 x 5.300 x 1.000 x 0.407

Pq = 1.079 ton

Pqv = Hq x Sin(alpha)

= 1.079 x 0.000

= 0.000 ton

X = 5.100 m

Pqh = Hq x Cos(alpha)

= 1.079 x 1.000

= 1.079 ton

Y = 5.300 : 2.000

= 2.650 m

B By earth

B–1 Wet soil

Length = 1.000 m

Hwet = 5.300 m

Hsat = 0.000 m

1. Load trianngular

Pw = 0.500 x Ywet x Hwet^2 x L x Ke

= 0.500 x 1.850 x 28.090 x 1.000 x 0.407

= 10.575 ton

Pw(v)	=	Pw x Sin(alpha)	Pw(h)	=	Pw x Cos(alpha)	
	=	10.575 x 0.000		=	10.575 x 1.000	
	=	0.000 ton		=	10.575 ton	
X	=	5.100 m	Y	=	5.300 : 3.000 + 0.000	
				=	1.767 m	

B–2 Saturated

H sat = 0.000 m

2. Load rectangular

Ps1 = Ysat x H sat x L x Ke

= 2.000 x 0.000 x 1.000 x 0.407

= 0.000 ton

Ps1(v)	=	H sat x Sin(alpha)	Ps1(h)	=	H sat x Cos(alpha)	
	=	0.000 0.000		=	0.000 x 1.000	
	=	0.000 ton		=	0.000 ton	
X	=	5.100 m	Y	=	0.000 : 2.000	
				=	0.000 m	

3. Load trianngular

Ps2 = 0.500 x Ysat x H sat^2 x L x Ke

= 0.500 x 2.000 x 0.000 x 1.000 x 0.407

= 0.000 ton

Ps2(v)	=	H sat–2 x Sin(alpha)	Ps2(h)	=	H sat–2 x Cos(alpha)	
	=	0.000 x 0.000		=	0.000 x 1.000	
	=	0.000 ton		=	0.000 ton	
X	=	5.100 m	Y	=	0.000 : 3.000	
				=	0.000 m	

4. Water

Hw = 0.000 m

Pw in = 0.500 x Yw x Hw^2 x L

= 0.500 x 1.000 x 0.000 x 1.000

= 0.000 ton

X = 5.100 m

Y = 0.000 : 3.000

= 0.000 m

Hw = 0.300 m

Pw out = 0.500 x Yw x Hw^2 x L

= 0.500 x 1.000 x 0.090 x 1.000

= 0.045 ton

X = 0.000 m

Y = 0.300 : 3.000

= 0.100 m

5. Uplife HWL

B = 5.100 m

Pu = Hw x B x Yw

= 0.000 x 5.100 x 1.000

= 0.000 ton/m'

X = 5.100 : 2.000

= 2.550 m

Project	: Medan Flood Control	Japan International Cooperation Agency (JICA)	Calculation sheet	
Channel	: Medan Flood Way		Date	
Structure	: Br – F7		Nos of sheet	
Station	: FW 38 + 78		Prepared by	

II.6 Combined Load

II.6.1 Case– I,Normal condition (HWL)

Length	L	=	5.50	m
Width of floting	W3	=	5.10	m
Thick of footing	H3	=	1.00	m

	Item	V load/m'	H load /m'	Xo	Yo	V.Xo	H.Yo
Super structure	V–sp	21.485		2.100		45.119	
Abutment	V–abt	28.751		2.667		76.679	
Back fill in Hwl	V–bf	33.724		3.475		117.191	
			Active earth pressure				
Surcharge load	Pq		1.574		2.650		4.171
Earth load triangle	Pw		1.649		3.667		6.047
Earth load rectangular	Ps1		1.693		1.425		2.413
Earth load triangle	Ps2		2.412		0.950		2.291
Water	Pw in		(4.061)		0.785		(3.188)
	Pw out		4.961		1.051		5.214
Up life	Pu	(14.535)		2.255		(32.776)	
	Total	69.425	8.228			206.212	16.948

X'	=	Vo.Xo / Vo tot			Y'	=	Ho.Yo / Ho tot	
	=	206.212 / 69.425				=	16.948 / 8.228	
	=	2.970	m			=	2.060	m
V	=	V/m'	x	L				
	=	69.43	x	5.50				
	=	381.84	ton					
H	=	H/m'	x	L				
	=	8.23	x	5.50				
	=	45.25	ton					
M	=	V.(X–(0.5.W	–	H.(Y–tb)				
		0.5 x W	=	0.50	x	5.10		
			=	2.55	m			
		(X –(0.5xW)	=	2.97	–	2.55		
			=	0.42	m			
		(Y – tb)	=	2.060	–	1.00		
			=	1.06	m			
		H x (Y – tb)	=	45.25	x	1.06		
			=	47.96	t.m			
	=	V x (X–(0.5	–	(H x (Y–tb))				
	=	381.84	x	0.42	–	47.96		
	=	160.48	–	47.96				
	=	112.52	t.m					

cld–an

II.6.2 Case – II,Normal condition (LWL)

	Item	Vo/m'	Ho/m'	Xo	Yo	Vo.Xo	Ho.Yo
Super structure	V–sp	21.485		2.100		45.119	
Abutment	V–Abt	28.751		2.667		76.679	
Back fill	V–bf	33.724		3.475		117.191	
			Active earth pressure				
Surcharge load	Hq		1.574		2.650		4.171
Earth load triangle	Hwet		7.717		1.767		13.636
Earth load uniform	Hsat–1						
Earth load triangle	Hsat–2						
Water	Pw						
Up life	Pu						
	Total	83.960	9.291			238.988	17.807

X'	=	Vo.Xo / Vo tot			Y'	=	Ho.Yo / Ho tot	
	=	238.988 / 83.960				=	17.807 / 9.291	
	=	2.846	m			=	1.917	m
V	=	V/m'	x	L				
	=	83.96	x	5.50				
	=	461.78	ton					
H	=	H/m'	x	L				
	=	9.29	x	5.50				
	=	51.10	ton					
M	=	V x (X–(0.5	–	(H x (Y–tb))				
		0.5 x W	=	0.500	x	5.10		
			=	2.55	m			
		(X –(0.5xW)	=	2.846	–	2.55		
			=	0.30	m			
		(Y – tb)	=	1.917	–	1.00		
			=	0.92	m			
		H x (Y – tb)	=	51.10	x	0.92		
			=	46.84	m			
	=	V x (X–(0.5	–	(H x (Y–tb))				
	=	461.78	x	0.30	–	46.84		
	=	136.90	–	46.84				
	=	90.06	t.m					

cld–an

Project	: Medan Flood Control	Japan International Cooperation Agency (JICA)	Calculation sheet
Channel	: Medan Flood Way		Date
Structure	: Br – F7		Nos of sheet
Station	: FW 38 + 78		Prepared by

II.6.3 Case– III Earthquake condition (HWL)

Length	L	=	5.50	m
Width of ffoting	W3	=	5.10	m
Thick of footing	H3	=	1.00	m

	Item	V load/m'	H load /m	Xo	Yo	V.Xo	H.Yo
Super structure	V–sp	21.485	2.015	2.100	5.055	45.119	10.186
Abutment	V–abt	28.751	4.313	2.667	2.715	76.679	11.710
Back fill in Hwl	V–bf	33.724	5.059	3.475	2.772	117.191	14.024
			Active earth pressure				
Surcharge load	Pq		1.079		2.650		2.859
Earth load triangle	Pw		2.260		3.667		8.287
Earth load rectangular	Ps1		2.320		1.425		3.306
Earth load triangle	Ps2		3.306		0.950		3.141
Water	Pw in		(4.061)		0.785		(3.188)
	Pw out		4.961		1.051		5.214
Up life	Pu	(14.535)		2.255		(32.776)	
	Total	69.425	21.252			206.212	55.539

$$X' = \frac{Vo.Xo}{Vo\ tot} = \frac{206.212}{69.425} = 2.970\ m \qquad Y' = \frac{Ho.Yo}{Ho\ tot} = \frac{55.539}{21.252} = 2.613\ m$$

V = V/m' x L
= 69.43 x 5.50
= 381.84 ton

H = H/m' x L
= 21.25 x 5.50
= 116.89 ton

M = V.(X–(0.5.W)) – H.(Y–tb)

0.5 x W	=	0.50	x	5.10	
	=	2.55	m		
(X –(0.5xW))	=	2.97	–	2.55	
	=	0.42	m		
(Y – tb)	=	2.613	–	1.00	
	=	1.61	m		
H x (Y – tb)	=	116.89	x	1.61	
	=	188.58	t.m		

= V x (X–(0.5 x V – (H x (Y–tb))
= 381.84 x 0.42 – 188.58
= 160.48 – 188.58
= (28.10) t.m

cld–aq

II.6.3 Case– IV Earthquake condition (LWL)

	Item	Vo/m'	Ho/m'	Xo	Yo	Vo.Xo	Ho.Yo
Super structure	V–sp	21.485	2.015	2.100	5.055	45.119	10.186
Abutment	V–Abt	28.751	4.313	2.667	2.715	76.679	11.710
Back fill	V–bf	33.724	5.059	3.475	2.772	117.191	14.024
				Active earth pressure			
Surcharge load	Hq		1.079		2.650		2.859
Earth load triangle	Hwet		10.575		1.767		18.686
Earth load uniform	Hsat–1						
Earth load triangle	Hsat–2						
Water	Pw						
Up life	Pu						
	Total	83.960	23.041			238.988	57.465

$$X' = \frac{Vo.Xo}{Vo\ tot} = \frac{238.988}{83.960} = 2.846\ m \qquad Y' = \frac{Ho.Yo}{Ho\ tot} = \frac{57.465}{23.041} = 2.494\ m$$

V = V/m' x L
= 83.96 x 5.50
= 461.78 ton

H = H/m' x L
= 23.04 x 5.50
= 126.73 ton

M = V x (X–(0.5 x V – (H x (Y–tb))

0.5 x W	=	0.500	x	5.10	
	=	2.55	m		
(X –(0.5xW))	=	2.846	–	2.55	
	=	0.30	m		
(Y – tb)	=	2.494	–	1.00	
	=	1.49	m		
H x (Y – tb)	=	126.73	x	1.49	
	=	189.33	m		

= V x (X–(0.5 x V – (H x (Y–tb))
= 461.78 x 0.30 – 189.33
= 136.90 – 189.33
= (52.43) t.m

cld–aq

PRESTRESSED CONCRETE BRIDGE COMPUTATION
CHANNEL MEDAN FLOOD WAY
Br – Mf 7
Station : Fw 38 + 78

span
19.00

III FOUNDATION

Pile for Abutment

- III.1 Charateristic of pile
  - III.1.1 Normal condition
  - III.1.2 Earthquake condition
- III.2 Axial bearing load allowance for a pile
- III.3 Spring constant of a pile
  - III.3.1 Normal condition
  - III.3.2 Earthquake condition
- III.4 Displacement of a head pile
  - III.4.1 Normal condition
  - III.4.2 Earthquake condition
- III.5 Coeficient displacement of footing
  - III.5.1 Case – I,Normal condition (HWL)
  - III.5.2 Case – II,Normal condition (LWL)
  - III.5.3 Case – III,Earthquake condition (HWL)
  - III.5.4 Case – IV,Earthquake condition (LWL)
- III.6 Forces at the i–th pile head
  - III.6.1 Case – I,Normal condition (HWL)
  - III.6.2 Case – II,Normal condition (LWL)
  - III.6.3 Case – III,Earthquake condition (HWL)
  - III.6.4 Case – IV,Earthquake condition (LWL)
- III.7 Control stresses on a head pile
  - III.7.1 Normal condition
  - III.7.2 Earthquake condition
- III.8 Combined load at Abutment section
  - III.8.1 Case – I,Normal condition (HWL)
  - III.8.2 Case – II,Normal condition (LWL)
  - III.8.3 Case – III,Earthquake condition (HWL)
  - III.8.4 Case – IV,Earthquake condition (LWL)
- III.9 Resume Load on Abutment Section
- III.10 Reinforcing steel bar

Project : Medan Flood Control	Japan International Cooperation Agency (JICA)	Calculation sheet	
Channel : Medan Flood Way		Date	
Structure : Br – F7		Nos of sheet	
Station : FW 38 + 78		Prepared by	

III. FOUNDATION

III.1 Charateristic Value of Pile

III.1.1 Normal Condition

Beta = charateristic value of pile
kh = coeficient of horizontal subgrade reaction (kr/cm^3)
EI = flexural rigidity of pile
do = outer diameter of pile (cm)
Eo = modulus of deformation of the ground ontained from table

do	=	40.00 cm		
t	=	7.500 cm		
do^2	=	1,600 cm^2		
di	=	(do–2.t)		
	=	40 –	15	
	=	25 cm		
di^2	=	625 cm^2		
do^2–di^2	=	1,600 –	625	
	=	975 cm		
do^4	=	2,560,000 cm4		
di^4	=	390,625 cm4		
do^4– di^4	=	2,560,000 –	390,625	
	=	2,169,375 cm4		

Modulus elasticity

Permanent load

a. concrete K.400

Ec = 343,327 kg/cm2

b. steel

Es = 1,897,200 kg/cm2

Inertia of pile, concrete K – 400

Ix = @pi/64(do^4–di^4)
= 0.05 x 2,169,375
= 106,489 cm^4

Area of prestress

Ap = @pi/4 (do^2 – di^2)
= 0.79 x 975.00
= 765.76 cm^2

$$Beta = \left(\frac{kh.do}{4.E.I}\right)^{0.25}$$

kho = 1/30 x alpa x Eo
Alpha = 0.20 from table 3.5
Eo = 28 x N
= 28.00 x 10.00
= 280 kg/cm3

E.I	=	343,327	x	106,489	=	3.66E+10 kg.cm2
4.E.I	=	4	x	3.66E+10	=	1.46E+11 kg.cm2
kho	=	1/30	x	Alpa	x	Eo
	=	0.03	x	1	x	280
	=	9.33 kg/cm3				

$$kh = kho \times \{(Beta\ h)/30\}^{-0.75} \quad (1)\text{--------equition}$$

charc–n

Beta h = Bh
Beta = B
Bh = @sqrt(do / B)
do = 40.00
------ = ---------- = 6,802.27
B = 0.00588039 ---> B find by trial
Bh = 82.48
82.48
(Bh / 30) = ---------- = 2.75
30.00
(Bh/30) ^ –0.75 = 0.47
kh = 9.33 x 0.47
= 4.3715

$$B = \left(\frac{kh \times do}{4.EI}\right)^{0.25} \quad (2)\text{--------equition}$$

$$kh = \frac{Beta^4 \times 4.EI}{do}$$

1.20E–09
kh = --------- x 1.46E+11
40.00
------ (1) = ------ (2)

4.3715	=	4.3716 kg/cm3

By trial value of " kh " left side = right side

kh = 4.3716 kg/cm3
= 4,371.57 tom/m3
B = 0.00588 cm–1
B = 0.588039 m–1
kh x do = 4.3716 x 40.00
= 174.86

Allowance Horizontal Force

Normal Condition

$$Han = \frac{kh \times do}{B} \times delta$$

$$= \frac{174.86}{0.01} \times 1.00$$

= 29,736.57 kg

= 29.74 ton

charc–n

Project	: Medan Flood Control	Japan Internation	Calculation sheet
Channel	: Medan Flood Way	Cooperation Agen	Date
Structure	: Br – F7	(JICA)	Nos of sheet
Station	: FW 35 + 75		Prepared by

III.1 Charateristic Value of Pile
III.1.2 Earthquake Condition

Beta	=	charateristic value of pile
kh	=	coeficient of horizontal subgrade reaction (kr/cm^3)
EI	=	flexural rigidity of pile
do	=	outer diameter of pile (cm)
Eo	=	modulus of deformation of the ground ontained from table

do	=	40.00	cm	
t	=	7.500	cm	
do^2	=	1,600	cm^2	
di	=	(do–2.t)		
	=	40 –	15	
	=	25	cm	
di^2	=	625	cm^2	
do^2–di^2	=	1,600 –	625	
	=	975	cm	
do^4	=	2,560,000	cm4	
di^4	=	390,625	cm4	
do^4– di^4	=	2,560,000 –	390,625	
	=	2,169,375	cm4	

Modulus elasticity

a. concrete

Permanent load K – 400

Ec = 514,991 kg/cm2

b. steel

Es = 1,897,200 kg/cm2

Inertia of pile,concrete K.400

Ix = @pi/64(do^4–di^4)
= 0.05 x 2,169,375
= 106,489 cm^4

Area of prestress

Ap = @pi/4 (do^2 – di^2)
= 0.79 x 975.00
= 765.76 cm^2

$$Beta = \left(\frac{kh.do}{4.E.I}\right)^{0.25}$$

kho = 1/30 x alpa x Eo
Alpha = 0.20 from table 3.5
Eo = 28 x N
= 28.00 x 10.00
= 280 kg/cm3

E.I = 514,991 x 106,489 = 5.48E+10 kg.cm2
4.E.I = 4 x 5.48E+10 = 2.19E+11 kg.cm2
kho = 1/30 x Alpa x Eo
= 0.03 x 1 x 280
= 9.33 kg/cm3

$$kh = kho \times \{(Beta\ h)/30\}^{-0.75} \quad (1)\text{--------equition}$$

charc–q

Beta h	=	Bh			
Beta	=	B			
Bh	=	@sqrt(do / B)			
do		40.00			
-----	=	----------	=	7,604.00	
B		0.00526039		---> B find by trial	
Bh	=	87.20			
		87.20			
(Bh / 30)	=	----------	=	2.91	
		30.00			
(Bh/30) ^ –0.75	=	0.45			
kh	=	9.33	x	0.45	
	=	4.1926			

$$B = \left(\frac{kh \times do}{4.EI}\right)^{0.25} \quad (2)\text{--------equition}$$

$$kh = \frac{Beta^4 \times 4.EI}{do}$$

$$kh = \frac{7.66E-10}{40.00} \times 2.19E+11$$

------ (1) = ------ (2)

4.1926 = 4.1993 kg/cm3

By trial value of " kh " left side = right side

kh	=	4.1993	kg/cm3
	=	4,199.29	tom/m3
B	=	0.00526	cm–1
B	=	0.526039	m–1
kh x do	=	4.1993 x	40.00
	=	167.97	

Allowance Horizontal Force

Earthquake Condition

$$Haq = \frac{kh \times do}{B} \times delta$$

$$= \frac{167.97}{0.01} \times 1.00$$

= 31,931.40 kg
= 31.93 ton

charc–q

Project : Medan Flood Control	Japan International Cooperation Agency (JICA)	Calculation sheet	
Channel : Medan Flood Way		Date	
Structure : Br – F 7		Nos of sheet	
Station : FW 38 + 78		Prepared by	

III.2 Axial bearing load allowance for a pile

a. by soil

do	=	outer diameter of a pile (m)
di	=	inner diameter of a pile (m)
Lb	=	depth of log boring from top soil to the hard layer N > 40
As	=	total circumferential surface area of the pile (m2)
N2'	=	mean N–value in the range from the tip of the pile to 10xD above.
do	=	diameter or width of the pile
Ru	=	ultimate bearing capacity of the pile
li	=	statum thickness with the skin friction power taken into account (m)
fi	=	maximum unit area skin friction power of statum with the skin friction power taken into account (t/m2)
Ws	=	effective weight of soil which replace by pile
W	=	effective weight of concrete which filled in the pile
Lc	=	length of pile filled by concrete
N2'	=	Mean N–value in the range from the tip of the pile to 10xD above.
do	=	diameter or width of the pile

do	=	0.40	m					
t	=	0.075	m					
di	=	(do – (2 x t)		m				
	=	0.40	–	0.150				
	=	0.25	m					
do^2	=	0.1600	m2					
di^2	=	0.0625	m2					
do^2–di^2	=	0.1600	–	0.06				
	=	0.0975	m2					
Ap	=	area of a pile (m2)						
	=	0.25	x	3.14	x(	do^2	–	di^2)
	=	0.25	x	3.14	x	0.0975		
	=	0.0766	m2					
ro	=	0.20	m					
U	=	2.00	x	@Pi	x	ro		
	=	2.00	x	3.14	x	0.20		
	=	1.26	m					
As	=	total circumferential surface area of the pile (m2)						
	=	U	x	Lp				
	=	1.26	x	11.00				
	=	13.82	m2					
Nl	=	50.00						
N	=	40.00						

III.2.1 Normal condition

N – value of embedded

N–value top	N–value bot.	Elv. top	Elv. bot.	avrg depth	tot depth	avrg N–value	tot. N–value	Kind of soils	soil friction (t/m2)	lixfi
4.00	3.00	28.336	27.336	1.00	1.00	3.50	3.50	soft clay	3.30	3.30
3.00	4.00	27.336	26.336	1.00	2.00	3.50	3.50	sand	6.80	6.80
4.00	6.00	26.336	25.336	1.00	3.00	5.00	5.00	do	6.80	6.80
6.00	22.00	25.336	24.336	1.00	4.00	14.00	14.00	do	6.80	6.80
22.00	24.00	24.336	23.336	1.00	5.00	23.00	23.00	do	6.80	6.80
24.00	30.00	23.336	22.336	1.00	6.00	27.00	27.00	do	6.80	6.80
30.00	33.00	22.336	21.336	1.00	7.00	31.50	31.50	do	6.80	6.80
33.00	35.00	21.336	20.336	1.00	8.00	34.00	34.00	do	6.80	6.80
35.00	48.00	20.336	19.336	1.00	9.00	41.50	41.50	do	6.80	6.80
48.00	50.00	19.336	18.336	1.00	10.00	49.00	49.00	do	6.80	6.80
50.00	50.00	18.336	17.336	1.00	11.00	50.00	50.00	do	6.80	6.80
		sum		11.00			282.00		71.30	71.30

N – value average = 282.00 : 11.00 = 25.64

Length of Lp = Lp = 11.00 m

Material is fine sand

$$N = \frac{N1 + N2'}{2}$$

$$N = \frac{50.00 + 50.00}{2} = 50.00 < 40$$

4 x D	=	4.00	x	0.40				
	=	1.60	m					
N2'	=	(50+50)/2						
	=	50.00						
4.D	=	4.00	x	0.40	=	1.60	m	
l = 1/2 x D	=	0.50	x	1.60	=	0.80	m	
l/D	=	0.80	:	0.40	=	2.00		
qd/N	=	8.00						
qd	=	8.00	x	N				
	=	8.00	x	40.00				
	=	320.00	ton/m2					
A	=	0.25.@pi.d^2						
qd.A	=	320	x	0.1257				
	=	40.21						
U	=	2 x @pi x ro						
	=	2.00	x	3.14	x	0.20		
	=	1.26	m					
Ru	=	qd.A + U.(total li.fi)						
	=	40.21	+	1.26	x	71.30		
	=	129.811	ton					
Lc	=	3.67	m					
Y soil	=	2.00	t/m3					
Ws	=	Effective weight of soil which replace by pile						
	=	0.25	@pi			do^2	Lp	Ysoil
	=	0.25	x	3.14	x	0.16	x 11.00 x	2.00
	=	2.76	ton					
W	=	Effective weight of concrete which filled in the pile						
	=	0.25	@pi		x	di^2	Lc	Y concrete
	=	0.25	x	3.14	x	0.06	x 2.00 x	2.50
	=	0.25	ton					

Normal condition,

Force bearing capacity of a pile in abutment

Permanent load safety factor Sn = 3.00

Temporary load safety factor Sq = 2.00

$$Ran = \frac{1}{Sn} \times (Ru - Ws) + Ws - W$$

$$= \frac{1.00}{3.00} \times (129.81 - 2.76) + 2.76 - 0.25$$

axl – alw

	=	0.33	x(	127.05	)+	2.52					
	=	42.35	+	2.52							
	=	44.87	ton/nos								

b. by material

Rp	=	area of pile	x	compressive stress							
	=(	765.7632	x	350.00	)/	3.00		SF =	3.00		
	=	89,339.04	kg								
	=	89.34 ton									

R minimum = 44.87 ton

Earth quake condition

		1.00									
Raq	=	----	x(	129.81	−	2.76	)+	2.76	−	0.25	
		2.00									
	=	0.50	x(	127.05	)	+	2.52				
	=	63.52	+	2.52							
	=	66.04	ton/nos								

number of piles

Case		V	H	M	Allowance bearing a pile		Nos of pile	
		ton	ton	ton.m	Vertical	Horizontal	Vertical	Horizontal
	Normal condition							
Case−I	HWl	381.84	45.25	112.52	44.87	29.99	8.51	1.51
Case−II	LWL	461.78	51.10	90.06	44.87	29.99	10.29	1.70
	Earth quake condition							
Case−III	HWl	381.84	116.89	(28.10)	66.04	32.15	5.78	3.64
Case−IV	LWL	461.78	126.73	−52.43	66.04	32.15	6.99	3.94

axd−alw

Project	: Medan Flood Control	Japan International Cooperation Agency (JICA)	Calculation sheet
Channel	: Medan Flood Way		Date
Structure	: Br − F 7		Nos of sheet
Station	: FW 38 + 78		Prepared by

III.3 Spring Constante

III.3.1 Normal condition

Ep	=	Elasticity of precast prestressed pile concrete
h	=	axial length of pile above the design ground surface
Beta	=	charateristic value of pile
k	=	coeficient of horozontal sub grade reaction (kg/cm^2)
IE	=	flexural rigidity of pile
K1,K2,K3&K4	=	spring constante
Kv	=	Axial force (axial spring constante)

do	t	di=do−2.t	do^2	di^2	do^2−di^2	do^4	di^4	do^4−di^4
cm	cm	cm	cm2	cm2	cm2	cm4	cm4	cm4
40	7.50	25.00	1,600	625	975	2,560,000	390,625	2,169,375

Ip = @pi/64 x (do^4−di^4)
= 0.0491 x 2,169,375
= 106,489 cm^4

Ap = 1/4.@pi.(do^2−di^2)
= 0.25 x 3.14 x 975
= 765.76 cm2

Ep = 343,327 kg/cm2

Lp = 11.00 m
= 1,100 cm

$$a = 0.04 \times \frac{Le}{do} - 0.27$$

$$= 0.04 \times \frac{1{,}100}{40} - 0.27$$

= 0.04 x 27.50 − 0.27
= 1.1000 − 0.27
= 0.8300

Spring constante on axial force = Kv

$$Kv = a \times \frac{Ap}{Lp} \times Ep$$

$$= 0.8300 \times \frac{765.76}{1{,}100} \times 343{,}327$$

= 0.8300 x 239,007
= 198,375 kg/cm
= 19,838 ton/m

E.I = 343,327 x 106,489
= 36,560,530,465 kg.cm2

4.EI = 4 x 3.656E+10
= 146,242,121,859 kg.cm2
= 146,242,121,859 x 1.00E−07
= 14,624 t.m2

2.EI = 7,312 t.m2

Beta = 0.588039 m−1

Beta^2 = 0.34579 m−2

Beta^3 = 0.2033 m−3

K1 = 4.EI.Beta^3
= 14,624 x 0.2033
= 2,974 ton/m

K2=K3 = 2.EI.Beta^2
= 7,312 x 0.3458
= 2,528 ton/rad

K4 = 2.EI.Beta
= 7,312 x 0.5880
= 4,300 ton.m/rad

kc−n

Project : Medan Flood Control Channel : Medan Flood Way Structure : Br – F7 Station : FW 36 + 78	Japan International Cooperation Agency (JICA)	Calculation sheet Date Nos of sheet Prepared by

III.3.2 Earthquake condition

Ep	=	Elasticity of precast prestressed pile concrete
h	=	axial length of pile above the design ground surface
Beta	=	charateristic value of pile
k	=	coeficient of horozontal sub grade reaction (kg/cm^2)
IE	=	flexural rigidity of pile
K1,K2,K3&K4	=	spring constante
Kv	=	Axial force (axial spring constante)

do cm	t cm	di=do–2.t cm	do^2 cm2	di^2 cm2	do^2–di^2 cm2	do^4 cm4	di^4 cm4	do^4–di^4 cm4
40	7.50	25.00	1,600	625	975	2,560,000	390,625	2,169,375

Ip = @pi/64 x (do^4–di^4)
= 0.0491 x 2,169,375
= 106,489 cm^4

Ap = 1/4.@pi.(do^2–di^2)
= 0.25 x 3.14 x 975
= 765.76 cm2

Ep = 514,991 kg/cm2

Lp = 11.00 m
= 1,100 cm

$$a = 0.04 \times \frac{Lp}{do} = 0.04 \times \frac{1{,}100}{40} = 0.04 \times 27.50 = 1.1000 - 0.27 = 0.8300$$

Spring constante on axial force = Kv

$$Kv = a \times \frac{Ap \times Ep}{Lp} = 0.8300 \times \frac{766 \times 514{,}991}{1{,}100} = 0.8300 \times 358{,}510 = 297{,}563 \text{ kg/cm} = 29{,}756 \text{ ton/m}$$

E.I = 514,991 x 106,489
= 5.484E+10 kg.cm2

4.EI = 4 x 5.484E+10
= 2.194E+11 kg.cm2
= 2.194E+11 x 1.00E–07
= 21,936 t.m2

2.EI = 10,968 t.m2

Beta = 0.52804 m–1

Beta^2 = 0.27883 m–2

Beta^3 = 0.1472 m–3

K1 = 4.EI.Beta^3
= 21,936 x 0.1472
= 3,230 ton/m

K2=K3 = 2.EI.Beta^2
= 10,968 x 0.2788
= 3,058 ton/rad

K4 = 2.EI.Beta
= 10,968 x .0.5280
= 5,792 ton.m/rad

kc–q

Project : Medan Flood Control Channel : Medan Flood Way Structure: Br – F 7 Station : FW 38 + 78	Japan International Cooperation Agency (JICA)	Calculation sheet Date Nos of sheet Prepared by

III.4 Displacement of head pile

III.4.1 Normal Condition

Axx = tot.(K1 x cos^2 ø + Kv x sin ^2 ø)
Axy = tot.(Kv – K1) x sin ø x cos ø)
Ayx = tot.(Kv – K1) x sin ø x cos ø)
Axa = tot.(KV – K1) x Xi x (sin ø x cos ø) – (K2 x cos ø))
Aax = tot.(KV – K1) x Xi x (sin ø x cos ø) – (K2 x cos ø))
Ayy = tot.(KV x cos ^2 ø + (K1 x sin ^2 ø))
Aya = tot.(KV x cos ^2 ø + K1 x sin ^2 ø) x Xi + K2 x sin ø)
Aay = tot.(KV x cos ^2 ø + K1 x sin ^2 ø) x Xi + K2 x sin ø)
Aaa = tot.(KV x cos ^2 ø + K1 x sin ^2 ø) x Xi ^2 ^ + (K2 + K3).Xi sin ø + K4)

Abutment		Rows				Total
Nos. of row		(1)	(2)	(3)	(4)	
side		L/s	L/s	R/s	R/s	
sign		(–)	0	(+)	(+)	
angle		> 0	0	< 0	< 0	
Xi	=	(1.875)	(0.625)	0.625	1.875	
n	=	3.00	3.00	3.00	3.00	
angle degree	=	0.0000	0.0000	0.0000	5.71	
sin ø	=	0.0000	0.00	0.00	0.10	
cos ø	=	1.0000	1.0000	1.0000	0.9950	
sin ø x cosø	=	0.0000	0.00	0.00	0.10	
sin ^2 ø	=	0.0000	0.00	0.00	0.01	
cos ^2 ø	=	1.0000	1.0000	1.0000	0.9901	
Xi ^2	=	3.5156	0.3906	0.3906	3.5156	
K1	=	2,974.00	2,974.00	2,974.00	2,974.00	
K2	=	2,528.00	2,528.00	2,528.00	2,528.00	
K3	=	2,528.00	2,528.00	2,528.00	2,528.00	
K4	=	4,300.00	4,300.00	4,300.00	4,300.00	
Kv	=	19,838.00	19,838.00	19,838.00	19,838.00	
n.K1	=	8,922	8,922	8,922	8,922	
n.K2	=	7,584	7,584	7,584	7,584	
n.K3	=	7,584	7,584	7,584	7,584	
n.K4	=	12,900	12,900	12,900	12,900	
n.Kv	=	59,514	59,514	59,514	59,514	
n.(K2 + K3)	=	15,168	15,168	15,168	15,168	
Xi.(n.(K2 + K3))	=	(28,440)	(9,480)	9,480	28,440	
Xi.(n.(K2 + K3)).sin ø	=	0	0	0	2,830	
n.(Kv–K1)	=	50,592	50,592	50,592	50,592	
n.(Kv–K1).sin ø.cosø	=	0	0	0	5,009	
n.K1.cos ^2 ø	=	8,922	8,922	8,922	8,834	
n.Kv.sin ^2 ø	=	0	0	0	589	
n.Kv.cos ^2 ø	=	59,514	59,514	59,514	58,925	
n.K1.sin ^2 ø	=	0	0	0	88	
n.K1.sin ø.cosø	=	0	0	0	883	
n.Kv.sin ø.cosø	=	0	0	0	5,892	
Xi.(n.K1.sin ø.cos ø)	=	0	0	0	1,656	
Xi.(n.Kv.sin ø.cos ø)	=	0	0	0	11,047	
n.K2.cos ø	=	7,584	7,584	7,584	7,546	
n.K2.sin ø	=	0	0	0	755	

coe–disn

n.K3.sin ø	=	0	0	0	755	
Xi.(n.Kv.cos ^2 ø)	=	(111,589)	(37,196)	37,196	110,484	
Xi.(n.K1.sin ^2 ø)	=	0	0	0	166	
Xi ^2.(n.Kv.cos ^2 ø)	=	209,229	23,248	23,248	207,158	
Xi ^2.(n.K1.sin ^2 ø)	=	0	0	0	310	
Xi.(n.K2.sin ø)	=	0	0	0	1,415	
Xi.(n.K3.sin ø)	=	0	0	0	1,415	
Axx = tot.(K1 x cos ^2 ø + Kv x sin ^2 ø)						
n.K1.cos ^2 ø	=	8,922	8,922	8,922	8,834	
n.Kv.sin ^2 ø	=	0	0	0	589	
total		8,922	8,922	8,922	9,423	36,189
Axy = tot.(Kv − K1) x sin ø x cos ø)						
n.(Kv−K1).sin ø.cosø	=	0	0	0	5,009	
A xy	=	0	0	0	5,009	5,009
A yx	=	0	0	0	5,009	5,009
Axa = tot.(KV − K1) x Xi x (sin ø x cos ø) − (K2 x cos ø))						
Xi.(n.(Kv − K1).sin ø.cc	=	0	0	0	9,391	
− n.K2.cos ø	=	(7,584)	(7,584)	(7,584)	(7,546)	
Axa		(7,584)	(7,584)	(7,584)	1,845	(20,907)
Aax	=	(7,584)	(7,584)	(7,584)	1,845	(20,907)
Ayy = tot.(KV x cos ^2 ø + (K1 x sin ^2 ø))						
n.Kv.cos ^2 ø	=	59,514	59,514	59,514	58,925	
n.K1.sin ^2 ø	=	0	0	0	88	
Ayy		59,514	59,514	59,514	59,013	237,555
Aya = tot.(KV x cos ^2 ø + K1 x sin ^2 ø) x Xi + K2 x sin ø)						
Xi.(n.Kv.cos ^2 ø)	=	(111,589)	(37,196)	37,196	110,484	
Xi.(n.K1.sin ^2 ø)	=	0	0	0	166	
n.K2.sin ø	=	0	0	0	755	
Aya	=	(111,589)	(37,196)	37,196	111,404	(184)
Aay	=	(111,589)	(37,196)	37,196	111,404	(184)
Aaa = tot.(KV x cos ^2 ø + K1 x sin ^2 ø) x Xi ^2 ^ + (K2+K3) Xi sin ø + K4)						
Xi ^2.(n.Kv.cos ^2 ø)	=	209,229	23,248	23,248	207,158	
Xi ^2.(n.K1.sin ^2 ø)	=	0	0	0	310	
n.(K2+K3).Xi.sin ø	=	0	0	0	2,830	
n.K4	=	12,900	12,900	12,900	12,900	
Aaa		222,129	36,148	36,148	223,198	517,622

coe−disn

Project : Medan Flood Control Channel : Medan Flood Way Structure: Br − F 7 Station : FW 38 + 78	Japan International Cooperation Agency (JICA)	Calculation sheet Date Nos of sheet Prepared by

III.4.2 .Earthquake condition

Axx = tot.(K1 x cos ^2 ø + Kv x sin ^2 ø)
Axy = tot.(Kv − K1) x sin ø x cos ø)
Ayx = tot.(Kv − K1) x sin ø x cos ø)
Axa = tot.(KV − K1) x Xi x (sin ø x cos ø) − (K2 x cos ø))
Aax = tot.(KV − K1) x Xi x (sin ø x cos ø) − (K2 x cos ø))
Ayy = tot.(KV x cos ^2 ø + (K1 x sin ^2 ø))
Aya = tot.(KV x cos ^2 ø + K1 x sin ^2 ø) x Xi + K2 x sin ø)
Aay = tot.(KV x cos ^2 ø + K1 x sin ^2 ø) x Xi + K2 x sin ø)
Aaa = tot.(KV x cos ^2 ø + K1 x sin ^2 ø) x Xi ^2 ^ + (K2 + K3).Xi sin ø + K4)

Abutment		Rows				Total
Nos. of row		(1)	(2)	(3)	(4)	
side		L/s	L/s	R/s	R/s	
sign		(−)	0	(+)	(+)	
angle		> 0	0	< 0	< 0	
Xi	=	(1.875)	(0.625)	0.625	1.875	
n	=	3.00	3.00	3.00	3.00	
angle degree	=	0.0000	0.0000	0.0000	5.71	
sin ø	=	0.0000	0.00	0.00	0.10	
cos ø	=	1.0000	1.0000	1.0000	0.9950	
sin ø x cosø	=	0.0000	0.00	0.00	0.10	
sin ^2 ø	=	0.0000	0.00	0.00	0.01	
cos ^2 ø	=	1.0000	1.0000	1.0000	0.9901	
Xi^2	=	3.5156	0.3906	0.3906	3.5156	
K1	=	3,230	3,230	3,230	3,230	
K2	=	3,058	3,058	3,058	3,058	
K3	=	3,058	3,058	3,058	3,058	
K4	=	5,792	5,792	5,792	5,792	
Kv	=	29,756	29,756	29,756	29,756	
n.K1	=	9,690	9,690	9,690	9,690	
n.K2	=	9,174	9,174	9,174	9,174	
n.K3	=	9,174	9,174	9,174	9,174	
n.K4	=	17,376	17,376	17,376	17,376	
n.Kv	=	89,268	89,268	89,268	89,268	
n.(K2 + K3)	=	18,348	18,348	18,348	18,348	
Xi.(n.(K2 + K3))	=	(34,403)	(11,468)	11,468	34,403	
Xi.(n.(K2 + K3)).sin ø	=	0	0	0	3,423	
n.(Kv−K1)	=	79,578	79,578	79,578	79,578	
n.(Kv−K1).sin ø.cosø	=	0	0	0	7,878	
n.K1.cos ^2 ø	=	9,690	9,690	9,690	9,594	
n.Kv.sin ^2 ø	=	0	0	0	884	
n.Kv.cos ^2 ø	=	89,268	89,268	89,268	88,384	
n.K1.sin ^2 ø	=	0	0	0	96	
n.K1.sin ø.cosø	=	0	0	0	959	
n.Kv.sin ø.cosø	=	0	0	0	8,838	
Xi.(n.K1.sin ø.cos ø)	=	0	0	0	1,799	
Xi.(n.Kv.sin ø.cos ø)	=	0	0	0	16,570	
n.K2.cos ø	=	9,174	9,174	9,174	9,128	
n.K2.sin ø	=	0	0	0	913	

coe−disq

n.K3.sin ø	=	0	0	0	913	
Xi.(n.Kv.cos ^2 ø)	=	(167,378)	(55,793)	55,793	165,721	
Xi.(n.K1.sin ^2 ø)	=	0	0	0	180	
Xi ^2.(n.Kv.cos ^2 ø)	=	313,833	34,870	34,870	310,726	
Xi ^2.(n.K1.sin ^2 ø)	=	0	0	0	337	
Xi.(n.K2.sin ø)	=	0	0	0	1,711	
Xi.(n.K3.sin ø)	=	0	0	0	1,711	
Axx = tot.(K1 x cos ^2 ø + Kv x sin ^2 ø)						
n.K1.cos ^2 ø	=	9,690	9,690	9,690	9,594	
n.Kv.sin ^2 ø	=	0	0	0	884	
total		9,690	9,690	9,690	10,478	39,548
Axy = tot.(Kv – K1) x sin ø x cos ø)						
n.(Kv–K1).sin ø.cosø	=	0	0	0	7,878	
A xy	=	0	0	0	7,878	7,878
A yx	=	0	0	0	7,878	7,878
Axa = tot.(KV – K1) x Xi x (sin ø x cos ø) – (K2 x cos ø))						
Xi.(n.(Kv – K1).sin ø.cos ø	=	0	0	0	14,772	
– n.K2.cos ø	=	(9,174)	(9,174)	(9,174)	(9,128)	
Axa		(9,174)	(9,174)	(9,174)	5,643	(21,879)
Aax	=	(9,174)	(9,174)	(9,174)	5,643	(21,879)
Ayy = tot.(KV x cos ^2 ø + (K1 x sin ^2 ø))						
n.Kv.cos ^2 ø	=	89,268	89,268	89,268	88,384	
n.K1.sin ^2 ø	=	0	0	0	96	
Ayy		89,268	89,268	89,268	88,480	356,284
Aya = tot.(KV x cos ^2 ø + K1 x sin ^2 ø) x Xi + K2 x sin ø)						
Xi.(n.Kv.cos ^2 ø)	=	(167,378)	(55,793)	55,793	165,721	
Xi.(n.K1.sin ^2 ø)	=	0	0	0	180	
n.K2.sin ø	=	0	0	0	913	
Aya	=	(167,378)	(55,793)	55,793	166,813	(564)
Aay	=	(167,378)	(55,793)	55,793	166,813	(564)
Aaa = tot.(KV x cos ^2 ø + K1 x sin ^2 ø) x Xi^2 ^ + (K2+K3) Xi sin ø + K4)						
Xi ^2.(n.Kv.cos ^2 ø)	=	313,833	34,870	34,870	310,726	
Xi ^2.(n.K1.sin ^2 ø)	=	0	0	0	337	
n.(K2+K3).Xi.sin ø	=	0	0	0	3,423	
n.K4	=	17,376	17,376	17,376	17,376	
Aaa		331,209	52,246	52,246	331,862	767,564

coe–disq

Project : Medan Flood Control Channal : Medan Flood Way Structure : Br – F 7 Station : FW 38 + 78	Japan International Cooperation Agency (JICA)	Calculation sheet Date Nos of sheet Prepared by

III.5 Displacement of head pile
III.5.1 Normal condition (WWL)

Axx	dx	+	Axy	dy	+	Axz	dz	= H
Ayx	dx	+	Ayy	dy	+	Ayz	dz	= V
Azx	dx	+	Azy	dy	+	Azz	dz	= M

36,189	dx	+	5,009	dy	+	(20,907)	dz	= 45.07 H
5,009	dx	+	237,555	dy	+	(184)	dz	= 381.84 V
(20,907)	dx	+	(184)	dy	+	517,622	dz	= 112.83 M

det A

3.619E+04	237555	–184 =
	–184	517622
5009	5009	–184 =
	–20907	517622
–20907	5009	237555 =
	–20907	–184

+	36189	x(	237555	x	517622	–	–184	x	–184)		
	36189	x(	122963694210	–	–33856	)				=	4.45E+15
–	5009	x(	5009	x	517622	–	–20907	x	–184)		
	5009	x(	2592766598	–	–3846868	)				=	–1.30E+13
+	–20907	x(	5009	x	–184	–	–20907	x	237555)		
	–20907	x(	–821656	–	4966562385	)				=	–1.04E+14
											4.33E+15

$$\frac{1}{\det} = \frac{1}{4.33E+15}$$

Kofactor

a11	2.36E+05		–1.84E+02	+(	2.36E+05	x	5.18E+05	)–(	–1.84E+02	x	–1.84E+02	)= C11
	–1.84E+02		5.18E+05	+(	1.23E+11			)–(	3.36E+04	)		= 1.23E+11
a12	5.01E+03		–1.84E+02	–(	5.01E+03	x	5.18E+05	)–(	–2.09E+04	x	–1.84E+02	)= C12
	–2.09E+04		5.18E+05	–(	2.59E+09			)–(	3.85E+08	)		= –2.59E+09
a13	5.01E+03		2.36E+05	+(	5.01E+03	x	–1.84E+02	)–(	–2.09E+04	x	2.36E+05	)= C13
	–2.09E+04		–1.84E+02	+(	–9.22E+05			)–(	–4.97E+09	)		= 4.97E+09
a21	5.01E+03		–2.09E+04	–(	5.01E+03	x	5.18E+05	)–(	–1.84E+02	x	–2.09E+04	)= C21
	–1.84E+02		5.18E+05	–(	2.59E+09			)–(	3.85E+08	)		= –2.59E+09
a22	3.62E+04		–2.09E+04	+(	3.62E+04	x	5.18E+05	–	–2.09E+04	x	–2.09E+04	)= C22
	–2.09E+04		5.18E+05	+(	1.87E+10			–	4.37E+08	)		= 1.83E+10
a23	3.62E+04		5.01E+03	+(	3.62E+04	x	–1.84E+02	–	–2.09E+04	x	5.01E+03	)= C23
	–2.09E+04		–1.84E+02	+(	–8.66E+08			–	–1.05E+08	)		= –9.81E+07
a31	5.01E+03		–2.09E+04	+(	5.01E+03	x	–1.84E+02	–	2.36E+05	x	–2.09E+04	)= C31
	2.36E+05		–1.84E+02	+(	–9.22E+05			–	–4.97E+09	)		= 4.97E+09
a32	3.62E+04		–2.09E+04	–(	3.62E+04	x	–1.84E+02	–	5.01E+03	x	–2.09E+04	)= C32
	5.01E+03		–1.84E+02	–(	–8.66E+08			–	–1.05E+08	)		= –9.81E+07
a33	3.62E+04		5.01E+03	+(	3.62E+04	x	2.36E+05	–	5.01E+03	x	5.01E+03	)= C33
	5.01E+03		2.36E+05	+(	8.80E+09			–	2.51E+07	)		= 8.57E+09

$$C = \begin{vmatrix} 1.23E+11 & -2.59E+09 & 4.97E+09 \\ -2.59E+09 & 1.83E+10 & -9.81E+07 \\ 4.97E+09 & -9.81E+07 & 8.57E+09 \end{vmatrix} \qquad \text{Adj } C = C\,t = \begin{vmatrix} 1.23E+11 & -2.59E+09 & 4.97E+09 \\ -2.59E+09 & 1.83E+10 & -9.81E+07 \\ 4.97E+09 & -9.81E+07 & 8.57E+09 \end{vmatrix}$$

$$A^{-1} = \frac{\text{adj } A}{\det A} = \frac{1}{\det A} \times \begin{vmatrix} 1.23E+11 & -2.59E+09 & 4.97E+09 \\ -2.59E+09 & 1.83E+10 & -9.81E+07 \\ 4.97E+09 & -9.81E+07 & 8.57E+09 \end{vmatrix} = \begin{vmatrix} 4.51E+01 & 4.97E+09 & 4.51E+01 \\ 3.82E+02 & -9.81E+07 & 3.82E+02 \\ 1.13E+02 & 8.57E+09 & 1.13E+02 \end{vmatrix}$$

$$\begin{vmatrix} 1.23E+11 & 4.51E+01 & -2.59E+09 & 3.82E+02 & 4.97E+09 & 1.13E+02 \\ -2.59E+09 & 4.51E+01 & 1.83E+10 & 3.82E+02 & -9.81E+07 & 1.13E+02 \\ 4.97E+09 & 4.51E+01 & -9.81E+07 & 3.82E+02 & 8.57E+09 & 1.13E+02 \end{vmatrix}$$

$$X = A^{-1}.b = \frac{1.00E+00}{4.33E+15} \times \begin{vmatrix} 5.54E+12 & -8.89E+11 & 5.80E+11 \\ -1.17E+11 & 6.99E+12 & -1.11E+10 \\ 2.24E+11 & -3.74E+10 & 9.67E+11 \end{vmatrix} =$$

$$X = \frac{1.00E+00}{4.33E+15} \times \begin{vmatrix} 5.11E+12 \\ 6.66E+12 \\ 1.15E+12 \end{vmatrix} = \begin{vmatrix} 1.18E-03 \\ 1.58E-03 \\ 2.66E-04 \end{vmatrix}$$

$$X = \begin{vmatrix} dx \\ dy \\ dz \end{vmatrix} = \begin{vmatrix} 0.00118013 \\ 0.00158270 \\ 0.00026621 \end{vmatrix}$$

Control

5,009.00	dx	+	237,555.00	dy	+	(184.00)	dz = 381.84
5009	x		0.0011801333	=		5.91126778	
237555	x		0.0015826975	=		375.977694	
–184	x		0.0002662064	=		–0.0489819	
						381.84	= 381.84

def–hl

Project	: Medan Flood Control	Japan International Cooperation Agency (JICA)	Calculation sheet
Channel	: Medan Flood Way		Date
Structure	: Br – F 7		Nos of sheet
Station	: FW 38 + 78		Prepared by

III.5.2 Case – II , Normal condition (LWL)

Aux	dx	+	Auy	dy	+	Aux	dz	= H
Ayx	dx	+	Ayy	dy	+	Ayy	dz	= V
Axx	dx	+	Axy	dy	+	Axx	dz	= M

38,189	dx	+	5,009	dy	+	(20,907)	dz = 51.10 H
5,009	dx	+	237,555	dy	+	(184)	dz = 461.78 V
(20,907)	dx	+	(184)	dy	+	517,822	dz = 90.08 M

det A

3.619E+04	237555	−184	=
	−184	517822	
5009	5009	−184	=
	−20907	517822	
−20907	5009	237555	=
	−20907	−184	

+	38189	x(	237555	x	517822	−	−184	x	−184)	
	38189	x(	122963894210	−	−33856	)				= 4.45E+15
−	5009	x(	5009	x	517822	−	−20907	x	−184)	
	5009	x(	2592788598	−	−3846888	)				= −1.30E+13
+	−20907	x(	5009	x	−184	−	−20907	x	237555)	
	−20907	x(	−921858	−	4988562385	)				= −1.04E+14
										4.33E+15

$$\frac{1}{\det} = \frac{1}{4.33E+15}$$

Kolactor

a11	2.36E+05		−1.84E+02	+(	2.36E+05	x	5.18E+05	)−(	−1.84E+02	x	−1.84E+02	)= C11
	−1.84E+02		5.18E+05	+(	1.22E+11			)−(	3.39E+04	)		= 1.23E+11
a12	5.01E+03		−1.84E+02	−(	5.01E+03	x	5.18E+05	)−(	−2.09E+04	x	−1.84E+02	)= C12
	−2.09E+04		5.18E+05	−(	2.59E+09			)−(	3.85E+06	)		= −2.59E+09
a13	5.01E+03		2.36E+05	+(	5.01E+03	x	−1.84E+02	)−(	−2.09E+04	x	2.36E+05	)= C13
	−2.09E+04		−1.84E+02	+(	−9.22E+05			)−(	−4.97E+09	)		= 4.97E+09
a21	5.01E+03		−2.09E+04	−(	5.01E+03	x	5.18E+05	)−(	−1.84E+02	x	−2.09E+04	)= C21
	−1.84E+02		5.18E+05	−(	2.59E+09			)−(	3.85E+06	)		= −2.59E+09
a22	3.62E+04		−2.09E+04	+(	3.62E+04	x	5.18E+05	−	−2.09E+04	x	−2.09E+04	)= C22
	−2.09E+04		5.18E+05	+(	1.87E+10			−	4.37E+08	)		= 1.83E+10
a23	3.62E+04		5.01E+03	+(	3.62E+04	x	−1.84E+02	−	−2.09E+04	x	5.01E+03	)= C23
	−2.09E+04		−1.84E+02	+(	−8.66E+06			−	−1.05E+06	)		= −9.81E+07
a31	5.01E+03		−2.09E+04	+(	5.01E+03	x	−1.84E+02	−	2.36E+05	x	−2.09E+04	)= C31
	2.36E+05		−1.84E+02	+(	−9.22E+05			−	−4.97E+09	)		= 4.97E+09
a32	3.62E+04		−2.09E+04	−(	3.62E+04	x	−1.84E+02	−	5.01E+03	x	−2.09E+04	)= C32
	5.01E+03		−1.84E+02	−(	−8.66E+06			−	−1.05E+06	)		= −9.81E+07
a33	3.62E+04		5.01E+03	+(	3.62E+04	x	2.36E+05	−	5.01E+03	x	5.01E+03	)= C33
	5.01E+03		2.36E+05	+(	9.60E+09			−	2.51E+07	)		= 8.57E+09

C =	1.23E+11		−2.59E+09		4.97E+09		Adj C = Ct =	1.23E+11		−2.59E+09		4.97E+09
	−2.59E+09		1.83E+10		−9.81E+07			−2.59E+09		1.83E+10		−9.81E+07
	4.97E+09		−9.81E+07		8.57E+09			4.97E+09		−9.81E+07		8.57E+09

$$A^{-1} = \frac{\text{adj A}}{\det A} = \frac{t}{\det A} \times \begin{vmatrix} 1.23E+11 & -2.59E+09 & 4.97E+09 \\ -2.59E+09 & 1.83E+10 & -9.81E+07 \\ 4.97E+09 & -9.81E+07 & 8.57E+09 \end{vmatrix} = \begin{vmatrix} 5.11E+01 & 4.62E+02 & 9.01E+01 \\ 5.11E+01 & 4.62E+02 & 9.01E+01 \\ 5.11E+01 & 4.62E+02 & 9.01E+01 \end{vmatrix}$$

$$X = A^{-1}.b = \frac{1.00E+00}{4.33E+15} \times \begin{vmatrix} 8.26E+12 & -1.20E+12 & 4.47E+11 \\ -1.32E+11 & 8.45E+12 & -8.83E+09 \\ 2.54E+11 & -4.53E+10 & 7.72E+11 \end{vmatrix} =$$

$$X = \frac{1.00E+00}{4.33E+15} \times \begin{vmatrix} 5.54E+12 \\ 8.31E+12 \\ 9.80E+11 \end{vmatrix} = \begin{vmatrix} 1.28E-03 \\ 1.92E-03 \\ 2.26E-04 \end{vmatrix}$$

$$X = \begin{vmatrix} dx \\ dy \\ dz \end{vmatrix} = \begin{vmatrix} 0.00127739 \\ 0.00191713 \\ 0.00022626 \end{vmatrix}$$

Control

5,009.00	dx	+	237,555.00	dy	+	(184.00)	dz = 461.78
5009	x	0.0012773940	=	6.3984650			
237555	x	0.0019171273	=	455.423166			
−184	x	0.000226264	=	−0.0416325			
				461.78	=	461.78	

def–h2

Project	: Medan Flood Control	Japan International Cooperation Agency (JICA)	Calculation sheet
Channel	: Medan Flood Way		Date
Structure	: Br – F 7		Nos of sheet
Station	: FW 38 + 78		Prepared by

Earthquake condition

III.5.3 Case – III Earthquake Condition (LWL)

Aux	dx	+	Auy	dy	+	Aux	dz	= H
Ayx	dx	+	Ayy	dy	+	Ayy	dz	= V
Axx	dx	+	Axy	dy	+	Axx	dz	= M

39,548	dx	+	7,878	dy	+	(21,879)	dz = 116.89 H
7,878	dx	+	356,284	dy	+	(564)	dz = 361.84 V
(21,879)	dx	+	(564)	dy	+	767,564	dz = (28.10) M

det A

3.955E+04	356284	−564	=
	−564	767564	
7878	7878	−564	=
	−21879	767564	
−21879	7878	356284	=
	−21879	−564	

+	39548	x(	356284	x	767564	−	−564	x	−564)	
	39548	x(	273470772178	−	−318096	)				= 1.08E+16
−	7878	x(	7878	x	767564	−	−21879	x	−564)	
	7878	x(	6046869192	−	−12339756	)				= −4.75E+13
+	−21879	x(	7878	x	−564	−	−21879	x	356284)	
	−21879	x(	−4443192	−	7795137636	)				= −1.70E+14
										1.06E+16

$$\frac{1}{\det} = \frac{1}{1.06E+16}$$

Kolactor

a11	3.56E+05		−5.64E+02	+(	3.56E+05	x	7.88E+05	)−(	−5.64E+02	x	−5.64E+02	)= C11
	−5.64E+02		7.88E+05	+(	2.73E+11			)−(	3.18E+05	)		= 2.73E+11
a12	7.88E+03		−5.64E+02	−(	7.88E+03	x	7.88E+05	)−(	−2.19E+04	x	−5.64E+02	)= C12
	−2.19E+04		7.88E+05	−(	6.05E+09			)−(	1.23E+07	)		= −6.03E+09
a13	7.88E+03		3.56E+05	+(	7.88E+03	x	−5.64E+02	)−(	−2.19E+04	x	3.56E+05	)= C13
	−2.19E+04		−5.64E+02	+(	−4.44E+08			)−(	−7.80E+06	)		= 7.79E+09
a21	7.88E+03		−2.19E+04	−(	7.88E+03	x	7.88E+05	)−(	−5.64E+02	x	−2.19E+04	)= C21
	−5.64E+02		7.88E+05	−(	6.05E+09			)−(	1.23E+07	)		= −6.03E+09
a22	3.95E+04		−2.19E+04	+(	3.95E+04	x	7.88E+05	−	−2.19E+04	x	−2.19E+04	)= C22
	−2.19E+04		7.88E+05	+(	3.04E+10			−	4.79E+06	)		= 2.99E+10
a23	3.95E+04		7.88E+03	+(	3.95E+04	x	−5.64E+02	−	−2.19E+04	x	7.88E+03	)= C23
	−2.19E+04		−5.64E+02	+(	−2.23E+07			−	−1.72E+06	)		= −1.50E+08
a31	7.88E+03		−2.19E+04	+(	7.88E+03	x	−5.64E+02	−	3.56E+05	x	−2.19E+04	)= C31
	3.56E+05		−5.64E+02	+(	−4.44E+08			−	−7.80E+06	)		= 7.79E+09
a32	3.95E+04		−2.19E+04	−(	3.95E+04	x	−5.64E+02	−	7.88E+03	x	−2.19E+04	)= C32
	7.88E+03		−5.64E+02	−(	−2.23E+07			−	−1.72E+06	)		= −1.50E+08
a33	3.95E+04		7.88E+03	+(	3.95E+04	x	3.56E+05	−	7.88E+03	x	7.88E+03	)= C33
	7.88E+03		3.56E+05	+(	1.41E+10			−	6.21E+07	)		= 1.40E+10

C =	2.73E+11		−6.03E+09		7.79E+09		Adj C = Ct =	2.73E+11		−6.03E+09		7.79E+09
	−6.03E+09		2.99E+10		−1.50E+08			−6.03E+09		2.99E+10		−1.50E+08
	7.79E+09		−1.50E+08		1.40E+10			7.79E+09		−1.50E+08		1.40E+10

$$A^{-1} = \frac{\text{adj A}}{\det A} = \frac{t}{\det A} \times \begin{vmatrix} 2.73E+11 & -6.03E+09 & 7.79E+09 \\ -6.03E+09 & 2.99E+10 & -1.50E+08 \\ 7.79E+09 & -1.50E+08 & 1.40E+10 \end{vmatrix} = \begin{vmatrix} 1.17E+02 & 3.82E+02 & -2.81E+01 \\ 1.17E+02 & 3.82E+02 & -2.81E+01 \\ 1.17E+02 & 3.82E+02 & -2.81E+01 \end{vmatrix}$$

$$X = A^{-1}.b = \frac{1.00E+00}{1.06E+16} \times \begin{vmatrix} 3.20E+13 & -2.30E+12 & -2.19E+11 \\ -7.05E+11 & 1.14E+13 & 4.22E+09 \\ 9.11E+11 & -5.73E+10 & -3.94E+11 \end{vmatrix} =$$

$$X = \frac{1.00E+00}{1.06E+16} \times \begin{vmatrix} 2.94E+13 \\ 1.07E+13 \\ 4.59E+11 \end{vmatrix} = \begin{vmatrix} 2.78E-03 \\ 1.01E-03 \\ 4.33E-05 \end{vmatrix}$$

$$X = \begin{vmatrix} dx \\ dy \\ dz \end{vmatrix} = \begin{vmatrix} 0.00277835 \\ 0.00101036 \\ 0.00004333 \end{vmatrix}$$

Control

7,878.00	dx	+	356,284.00	dy	+	(564.00)	dz = 361.84
7878	x	0.0027783538	=	21.8878714			
356284	x	0.0010103641	=	359.976565			
−564	x	0.0000433288	=	−0.0244373			
				361.84	=	361.84	

def–h3

Project	: Medan Flood Control	Japan International Cooperation Agency (JICA)	Calculation sheet
Channel	: Medan Flood Way		Date
Structure	: Br – F 7		Nos of sheet
Station	: FW 38 + 78		Prepared by

Earthquake condition

III.5.4 Eartquake Condition (LWL)

	Axx	dx	+	Axy	dy	+	Axz	dz	= H
	Ayx	dx	+	Ayy	dy	+	Ayz	dz	= V
	Azx	dx	+	Azy	dy	+	Azz	dz	= M

	39,548	dx	+	7,878	dy	+	(21,879)dz	=	126.73 H
	7,878	dx	+	356,284	dy	+	(564)dz	=	461.78 V
	(21,879)dx		+	(564)dy		+	767,564 dz	=	(52.43) M

det A

3.955E+04		356284		−564	=							
		−564		767564								
7878		7878		−564	=							
		−21879		767564								
−21879		7878		356284	=							
		−21879		−564								

+	39548	x(	356284	x	767564	−	−564	x	−564	)			
	39548	x(	273470772176	−	−318096	)					=	1.08E+16	
−	7878	x(	7878	x	767564	−	−21879	x	−564	)			
	7878	x(	6046869192	−	−12339756	)					=	−4.75E+13	
+	−21879	x(	7878	x	−564	−	−21879	x	356284	)			
	−21879	x(	−4443192	−	7795137636	)					=	−1.70E+14	
												1.08E+16	

1	=	1		
det		1.08E+16		

Kolactor

a11	3.56E+05		−5.64E+02	+(	3.56E+05	x	7.88E+05	)−(	−5.64E+02	x	−5.64E+02	)=	C11	
	−5.64E+02		7.88E+05	+(	2.73E+11			)−(	3.18E+05	)		=	2.73E+11	
a12	7.88E+03		−5.64E+02	−(	7.88E+03	x	7.88E+05	)−(	−2.19E+04	x	−5.64E+02	)=	C12	
	−2.19E+04		7.88E+05	−(	8.05E+09			)−(	1.23E+07	)		=	−8.03E+09	
a13	7.88E+03		3.56E+05	+(	7.88E+03	x	−5.64E+02	)−(	−2.19E+04	x	3.56E+05	)=	C13	
	−2.19E+04		−5.64E+02	+(	−4.44E+06			)−(	−7.80E+09	)		=	7.79E+09	
a21	7.88E+03		−2.19E+04	−(	7.88E+03	x	7.88E+05	)−(	−5.64E+02	x	−2.19E+04	)=	C21	
	−5.64E+02		7.88E+05	−(	8.05E+09			)−(	1.23E+07	)		=	−8.03E+09	
a22	3.95E+04		−2.19E+04	+(	3.95E+04	x	7.88E+05	−	−2.19E+04	x	−2.19E+04	)=	C22	
	−2.19E+04		7.88E+05	+(	3.04E+10			−	4.79E+08	)		=	2.99E+10	
a23	3.95E+04		7.88E+03	+(	3.95E+04	x	−5.64E+02	−	−2.19E+04	x	7.88E+03	)=	C23	
	−2.19E+04		−5.64E+02	+(	−2.23E+07			−	−1.72E+08	)		=	−1.50E+08	
a31	7.88E+03		−2.19E+04	+(	7.88E+03	x	−5.64E+02	−	3.56E+05	x	−2.19E+04	)=	C31	
	3.56E+05		−5.64E+02	+(	−4.44E+06			−	−7.80E+09	)		=	7.79E+09	
a32	3.95E+04		−2.19E+04	−(	3.95E+04	x	−5.64E+02	−	7.88E+03	x	−2.19E+04	)=	C32	
	7.88E+03		−5.64E+02	−(	−2.23E+07			−	−1.72E+08	)		=	−1.50E+08	
a33	3.95E+04		7.88E+03	+(	3.95E+04	x	3.56E+05	−	7.88E+03	x	7.88E+03	)=	C33	
	7.88E+03		3.56E+05	+(	1.41E+10			−	8.21E+07	)		=	1.40E+10	

C =

2.73E+11	−8.03E+09	7.79E+09
−8.03E+09	2.99E+10	−1.50E+08
7.79E+09	−1.50E+08	1.40E+10

Adj C = C t =

2.73E+11	−8.03E+09	7.79E+09
−8.03E+09	2.99E+10	−1.50E+08
7.79E+09	−1.50E+08	1.40E+10

A^−1 = adj A / det A × 1

2.73E+11	−8.03E+09	7.79E+09
−8.03E+09	2.99E+10	−1.50E+08
7.79E+09	−1.50E+08	1.40E+10

2.73E+11	x	1.27E+02	+	−8.03E+09	x	4.62E+02	+	7.79E+09	x	−5.24E+01	
−8.03E+09	x	1.27E+02	+	2.99E+10	x	4.62E+02	+	−1.50E+08	x	−5.24E+01	
7.79E+09	x	1.27E+02	+	−1.50E+08	x	4.62E+02	+	1.40E+10	x	−5.24E+01	

X = A^−1.b =

1.00E+00		3.47E+13	+	−2.79E+12	+	−4.06E+11		
1.06E+16	x	−7.65E+11	+	1.38E+13	+	7.87E+09	=	
		9.87E+11	+	−6.93E+10	+	−7.36E+11		

1.00E+00		3.15E+13		2.97E−03
1.06E+16	x	1.30E+13	=	1.23E−03
		1.83E+11		1.72E−05

X =

dx		0.00296888
dy	=	0.00123048
dz		0.00001722

Control

7,878.00	dx	+	356,284.00	dy	+	(564.00)dz	=	461.78
7878	x	0.0029688757	=	23.3868026				
356284	x	0.0012304818	=	438.400911				
−564	x	0.0000172233	=	−0.0097139				
				461.78	=	461.78		

Project	: Medan Flood Control	Japan International Cooperation Agency (JICA)	Calculation sheet
Channel	: Medan Flood Way		Date
Structure	: Br – F 7		Nos of sheet
Station	: FW 38 + 78		Prepared by

III.6 Force at each pile head

III.6.1 Case – I,Normal condition (HWL)

dxi = (dxi.cos ø) − (dy + alpa.Xi).sin ø)

dyi = (dxi.sin ø) + (dy + alpa.Xi)cos ø)

		Side	Row of pile (1)	(2)	(3)	(4)	total
			L/s	L/s	R/s	R/s	per
		sign	(−)	(−)	(+)	(+)	row
		degree	< 0			> 0	
Xi	m		(1.875)	(0.625)	0.625	1.875	
n=nos pile/rows			3.00	3.00	3.00	3.00	
ø	degree		0.00	0.00	0.00	5.71	
cos ø	degree		1.000	1.000	1.000	0.995	
sin ø	degree		0.000	0.000	0.000	0.099	
K1	t.m		2,974	2,974	2,974	2,974	
K2	t.m/rad		2,528	2,528	2,528	2,528	
K3	t.m/rad		2,528	2,528	2,528	2,528	
K4	t.m		4,300	4,300	4,300	4,300	
Kv	t.m		19,838	19,838	19,838	19,838	
dx	m		0.00118013	0.00118013	0.00118013	0.00118013	
dy	m		0.00158270	0.00158270	0.00158270	0.00158270	
alpa	rad		0.00026621	0.00026621	0.00026621	0.00026621	
dxi = dx cos ø − (dy + alpa.Xi).sin ø							
dx.cos ø	=		0.00118	0.00118	0.00118	0.00117	
dy	=		0.00158	0.00158	0.00158	0.00158	
alpa	=		0.00027	0.00027	0.00027	0.00027	
Alpa x Xi	=		(0.00050)	(0.00017)	0.00017	0.00050	
dy + Alpa x Xi	=		0.00108	0.00142	0.00175	0.00208	
(dy + alpa.Xi).sin ø	=		0.00000	0.00000	0.00000	0.00021	
dxi	=		0.00118	0.00118	0.00118	0.00097	
dyi = dx sin ø + (dy + alpa.Xi).cos ø							
dx.sin ø	=		0.0000000	0.0000000	0.0000000	0.0001174	
dy	=		0.0015827	0.0015827	0.0015827	0.0015827	
alpa	=		0.0002662	0.0002662	0.0002662	0.0002662	
Alpa x Xi	=		(0.0004991)	(0.0001664)	0.0001664	0.0004991	
dy + Alpa x Xi	=		0.0010836	0.0014163	0.0017491	0.0020818	
(dy + alpa.Xi).cos ø	=		0.0010836	0.0014163	0.0017491	0.0020715	
dyi	=		0.0010836	0.0014163	0.0017491	0.0021889	
P ni=Kv.dyi			21.50	28.10	34.70	43.42	
K1.dxi	=		3.51	3.51	3.51	2.88	
K2.alpa	=		0.67	0.67	0.67	0.67	
P hi=K1.dxi−K2.alpa	=		2.84	2.84	2.84	2.20	
K3.dxi	=		2.98	2.98	2.98	2.44	
K4.alpa	=		1.14	1.14	1.14	1.14	
M ti=−K3.dxi+K4.alpa	=		(1.84)	(1.84)	(1.84)	(1.30)	(6.82)
Mti x n	=		(5.52)	(5.52)	(5.52)	(3.90)	(20.45)
Vi = Pni.cos ø − Phi.sin ø							
Pni.cos	=		21.50	28.10	34.70	43.21	
Phi.sin ø	=		0.00	0.00	0.00	0.22	
Vi	=		21.50	28.10	34.70	42.99	
Vi.n	=		64.49	84.29	104.09	128.97	381.84
Hi= Pni.sin ø + Phi.cos ø							
Pni.sin ø	=		0.0	0.0	0.0	4.3	
Phi.cos ø	=		2.8	2.8	2.8	2.2	
Hi	=		2.84	2.84	2.84	6.51	
Hi.n	=		8.51	8.51	8.51	19.54	45.07
Vi.n.X	=		(120.91)	(52.68)	65.06	241.81	
Mti.n	=		(5.52)	(5.52)	(5.52)	(3.90)	
Mt=Mti.n + Vi.n.X	=		(126.43)	(58.20)	59.54	237.91	112.83

Total forces at footing of Abutment

Ho	=	45.07	ton
Vo	=	381.84	ton
Mo	=	112.83	t.m

Total forces at pile head

Hi.n = Ho	45.07	ton
Vi.n = Vo	381.84	ton
Mt = Mo	112.83	t.m

mvh−1

Project : Medan Flood Control Channel : Medan Flood Way Structure : Br – F 7 Station : FW 38 + 78	Japan International Cooperation Agency (JICA)	Calculation sheet Date Nos of sheet Prepared by

III.6.2 Case – II, Normal condition (LWL)

dxi = (dxi.cos ø) – (dy + alpa.Xi).sin ø)
dyi = (dxi.sin ø) + (dy + alpa.Xi)cos ø)

		Side	Row of pile (1)	(2)	(3)	(4)	total per row
		sign	L/s (–)	L/s (–)	R/s (+)	R/s (+)	
		degree	< 0			> 0	
Xi	m		(1.875)	(0.625)	0.625	1.875	
n=nos pile/rows			3.00	3.00	3.00	3.00	
ø	degree		0.00	0.00	0.00	5.71	
cos ø	degree		1.000	1.000	1.000	0.995	
sin ø	degree		0.000	0.000	0.000	0.099	
K1	t.m		2,974	2,974	2,974	2,974	
K2	t.m/rad		2,528	2,528	2,528	2,528	
K3	t.m/rad		2,528	2,528	2,528	2,528	
K4	t.m		4,300	4,300	4,300	4,300	
Kv	t.m		19,838	19,838	19,838	19,838	
dx	m		0.00127739	0.00127739	0.00127739	0.00127739	
dy	m		0.00191713	0.00191713	0.00191713	0.00191713	
alpa	rad		0.00022626	0.00022626	0.00022626	0.00022626	
dxi = dx cos ø – (dy + alpa.Xi) sin ø							
dx.cos ø	=		0.00128	0.00128	0.00128	0.00127	
dy	=		0.00192	0.00192	0.00192	0.00192	
alpa	=		0.00023	0.00023	0.00023	0.00023	
Alpa x Xi	=		(0.00042)	(0.00014)	0.00014	0.00042	
dy + Alpa x Xi	=		0.00149	0.00178	0.00206	0.00234	
(dy + alpa.Xi).sin ø	=		0.00000	0.00000	0.00000	0.00023	
dxi	=		0.00128	0.00128	0.00128	0.00104	
dyi = dx sin ø + (dy + alpa.Xi).cos ø							
dx.sin ø	=		0.0000000	0.0000000	0.0000000	0.0001271	
dy	=		0.0019171	0.0019171	0.0019171	0.0019171	
alpa	=		0.0002263	0.0002263	0.0002263	0.0002263	
Alpa x Xi	=		(0.0004242)	(0.0001414)	0.0001414	0.0004242	
dy + Alpa x Xi	=		0.0014929	0.0017757	0.0020585	0.0023414	
(dy + alpa.Xi).cos ø	=		0.0014929	0.0017757	0.0020585	0.0023296	
dyi	=		0.0014929	0.0017757	0.0020585	0.0024568	
P ni=Kv.dyi			29.62	35.23	40.84	48.74	
K1.dxi	=		3.80	3.80	3.80	3.09	
K2.alpa	=		0.57	0.57	0.57	0.57	
P hi=K1.dxi–K2.alpa	=		3.23	3.23	3.23	2.52	
K3.dxi	=		3.23	3.23	3.23	2.62	
K4.alpa	=		0.97	0.97	0.97	0.97	
M ti=–K3.dxi+K4.alpa	=		(2.26)	(2.26)	(2.26)	(1.65)	(8.42)
Mti x n	=		(6.77)	(6.77)	(6.77)	(4.95)	(25.26)
Vi = Pni.cos ø – Phi.sin ø							
Pni.cos	=		29.62	35.23	40.84	48.50	
Phi.sin ø	=		0.00	0.00	0.00	0.25	
Vi	=		29.62	35.23	40.84	48.25	
Vi.n	=		88.85	105.68	122.51	144.74	461.78
Hi= Pni.sin ø + Phi.cos ø							
Pni.sin ø	=		0.0	0.0	0.0	4.8	
Phi.cos ø	=		3.2	3.2	3.2	2.5	
Hi	=		3.23	3.23	3.23	7.35	
Hi.n	=		9.68	9.68	9.68	22.06	51.10
Vi.n.X	=		(166.59)	(66.05)	76.57	271.39	
Mti.n	=		(6.77)	(6.77)	(6.77)	(4.95)	
Mt=Mti.n + Vi.n.X	=		(173.36)	(72.82)	69.80	266.43	90.06

Total forces at footing of Abutment			
Ho	=	51.10	ton
Vo	=	461.78	ton
Mo	=	90.06	t.m

Total forces at pile head		
Hi.n = Ho	51.10	ton
Vi.n = Vo	461.78	ton
Mt = Mo	90.06	t.m

mvh–2

Project : Medan Flood Control Channel : Medan Flood Way Structure : Br – F 7 Station : FW 38 + 78	Japan International Cooperation Agency (JICA)	Calculation sheet Date Nos of sheet Prepared by

III.6.3 Case –III Earthquake Condition (HWL)

dxi = (dxi.cos ø) – (dy + alpa.Xi).sin ø)
dyi = (dxi.sin ø) + (dy + alpa.Xi)cos ø)

		Side	Row of pile (1)	(2)	(3)	(4)	total per row
		sign	L/s (–)	L/s (–)	R/s (+)	R/s (+)	
		degree	< 0			> 0	
Xi	m		(1.875)	(0.625)	0.625	1.875	
n=nos pile/rows			3.00	3.00	3.00	3.00	
ø	degree		0.00	0.00	0.00	5.71	
cos ø	degree		1.000	1.000	1.000	0.995	
sin ø	degree		0.000	0.000	0.000	0.099	
K1	t.m		3,230	3,230	3,230	3,230	
K2	t.m/rad		3,058	3,058	3,058	3,058	
K3	t.m/rad		3,058	3,058	3,058	3,058	
K4	t.m		5,792	5,792	5,792	5,792	
Kv	t.m		29,756	29,756	29,756	29,756	
dx	m		0.00277835	0.00277835	0.00277835	0.00277835	
dy	m		0.00101036	0.00101036	0.00101036	0.00101036	
alpa	rad		0.00004333	0.00004333	0.00004333	0.00004333	
dxi = dx cos ø – (dy + alpa.Xi).sin ø							
dx.cos ø	=		0.00278	0.00278	0.00278	0.00276	
dy	=		0.00101	0.00101	0.00101	0.00101	
alpa	=		0.00004	0.00004	0.00004	0.00004	
Alpa x Xi	=		(0.00008)	(0.00003)	0.00003	0.00008	
dy + Alpa x Xi	=		0.00093	0.00098	0.00104	0.00109	
(dy + alpa.Xi).sin ø	=		0.00000	0.00000	0.00000	0.00011	
dxi	=		0.00278	0.00278	0.00278	0.00266	
dyi = dx sin ø + (dy + alpa.Xi).cos ø							
dx.sin ø	=		0.0000000	0.0000000	0.0000000	0.0002764	
dy	=		0.0010104	0.0010104	0.0010104	0.0010104	
alpa	=		0.0000433	0.0000433	0.0000433	0.0000433	
Alpa x Xi	=		(0.0000812)	(0.0000271)	0.0000271	0.0000812	
dy + Alpa x Xi	=		0.0009291	0.0009833	0.0010374	0.0010916	
(dy + alpa.Xi).cos ø	=		0.0009291	0.0009833	0.0010374	0.0010862	
dyi	=		0.0009291	0.0009833	0.0010374	0.0013626	
P ni=Kv.dyi			27.65	29.26	30.87	40.55	
K1.dxi	=		8.97	8.97	8.97	8.58	
K2.alpa	=		0.13	0.13	0.13	0.13	
P hi=K1.dxi–K2.alpa	=		8.84	8.84	8.84	8.45	
K3.dxi	=		8.50	8.50	8.50	8.12	
K4.alpa	=		0.25	0.25	0.25	0.25	
M ti=–K3.dxi+K4.alpa	=		(8.25)	(8.25)	(8.25)	(7.87)	(32.61)
Mti x n	=		(24.74)	(24.74)	(24.74)	(23.61)	(97.82)
Vi = Pni.cos ø – Phi.sin ø							
Pni.cos	=		27.65	29.26	30.87	40.34	
Phi.sin ø	=		0.00	0.00	0.00	0.84	
Vi	=		27.65	29.26	30.87	39.50	
Vi.n	=		82.94	87.78	92.61	118.51	381.84
Hi= Pni.sin ø + Phi.cos ø							
Pni.sin ø	=		0.0	0.0	0.0	4.0	
Phi.cos ø	=		8.8	8.8	8.8	8.4	
Hi	=		8.84	8.84	8.84	12.44	
Hi.n	=		26.52	26.52	26.52	37.32	116.89
Vi.n.X	=		(155.51)	(54.86)	57.88	222.21	
Mti.n	=		(24.74)	(24.74)	(24.74)	(23.61)	
Mt=Mti.n + Vi.n.X	=		(180.25)	(79.60)	33.15	198.60	(28.10)

Total forces at footing of Abutment			
Ho	=	116.89	ton
Vo	=	381.84	ton
Mo	=	(28.10)	t.m

Total forces at pile head		
Hi.n = Ho	116.89	ton
Vi.n = Vo	381.84	ton
Mt = Mo	(28.10)	t.m

mvh–3

Project : Medan Flood Control Channel : Medan Flood Way Structure : Br – F6 Station : FW 38 + 78	Japan International Cooperation Agency (JICA)	Calcul Date Nos o Prepa

III.6.4 Earthquake Condition (LWL)

dxi = (dxi.cos ø) – (dy + alpa.Xi).sin ø)
dyi = (dxi.sin ø) + (dy + alpa.Xi)cos ø)

		Side	Row of pile (1)	(2)	(3)	(4)	total
		sign	L/s (–)	L/s (–)	R/s (+)	R/s (+)	per row
		degree	< 0			> 0	
Xi	m		(1.875)	(0.625)	0.625	1.875	
n=nos pile/rows			3.00	3.00	3.00	3.00	
ø	degree		0.00	0.00	0.00	5.71	
cos ø	degree		1.000	1.000	1.000	0.995	
sin ø	degree		0.000	0.000	0.000	0.099	
K1	t.m		3,230	3,230	3,230	3,230	
K2	t.m/rad		3,058	3,058	3,058	3,058	
K3	t.m/rad		3,058	3,058	3,058	3,058	
K4	t.m		5,792	5,792	5,792	5,792	
Kv	t.m		29,756	29,756	29,756	29,756	
dx	m		0.00296888	0.00296888	0.00296888	0.00296888	
dy	m		0.00123048	0.00123048	0.00123048	0.00123048	
alpa	rad		0.00001722	0.00001722	0.00001722	0.00001722	
dxi = dx cos ø – (dy + alpa.Xi).sin ø							
dx.cos ø	=		0.00297	0.00297	0.00297	0.00295	
dy	=		0.00123	0.00123	0.00123	0.00123	
alpa	=		0.00002	0.00002	0.00002	0.00002	
Alpa x Xi	=		(0.00003)	(0.00001)	0.00001	0.00003	
dy + Alpa x Xi	=		0.00120	0.00122	0.00124	0.00126	
(dy + alpa.Xi).sin ø	=		0.00000	0.00000	0.00000	0.00013	
dxi	=		0.00297	0.00297	0.00297	0.00283	
dyi = dx sin ø + (dy + alpa.Xi).cos ø							
dx.sin ø	=		0.0000000	0.0000000	0.0000000	0.0002954	
dy	=		0.0012305	0.0012305	0.0012305	0.0012305	
alpa	=		0.0000172	0.0000172	0.0000172	0.0000172	
Alpa x Xi	=		(0.0000323)	(0.0000108)	0.0000108	0.0000323	
dy + Alpa x Xi	=		0.0011982	0.0012197	0.0012412	0.0012628	
(dy + alpa.Xi).cos ø	=		0.0011982	0.0012197	0.0012412	0.0012565	
dyi	=		0.0011982	0.0012197	0.0012412	0.0015519	
P ni=Kv.dyi			35.65	36.29	36.93	46.18	
K1.dxi	=		9.59	9.59	9.59	9.14	
K2.alpa	=		0.05	0.05	0.05	0.05	
P hi=K1.dxi–K2.alpa	=		9.54	9.54	9.54	9.08	
K3.dxi	=		9.08	9.08	9.08	8.65	
K4.alpa	=		0.10	0.10	0.10	0.10	
M ti=–K3.dxi+K4.alpa	=		(8.98)	(8.98)	(8.98)	(8.55)	(35.49)
Mti x n	=		(26.94)	(26.94)	(26.94)	(25.65)	(106.46)
Vi = Pni.cos ø – Phi.sin ø							
Pni.cos	=		35.65	36.29	36.93	45.95	
Phi.sin ø	=		0.00	0.00	0.00	0.90	
Vi	=		35.65	36.29	36.93	45.05	
Vi.n	=		106.96	108.88	110.80	135.14	461.78
Hi= Pni.sin ø + Phi.cos ø							
Pni.sin ø	=		0.0	0.0	0.0	4.6	
Phi.cos ø	=		9.5	9.5	9.5	9.0	
Hi	=		9.54	9.54	9.54	13.63	
Hi.n	=		28.61	28.61	28.61	40.90	126.73
Vi.n.X	=		(200.55)	(68.05)	69.25	253.38	
Mti.n	=		(26.94)	(26.94)	(26.94)	(25.65)	
Mt=Mti.n + Vi.n.X	=		(227.49)	(94.99)	42.31	227.73	(52.43)

Total forces at footing of Abutment

Ho	=	126.73	ton
Vo	=	461.78	ton
Mo	=	(52.43)	t.m

Total forces at pile head

Hi.n = Ho	126.73	ton
Vi.n = Vo	461.78	ton
Mt = Mo	(52.43)	t.m

mvh–4

Project : Medan Flood Control Channel : Medan Flood Way Structure: Br – F 7 Station : Fw 38 + 78	Japan International Cooperation Agency (JICA)	Calculation sheet Date Nos of sheet Prepared by

III.7 Control stresses on pile
III.7.1 Case – II, Normal Condition (HWL)

PC pile dia.400 mm
Depth embedded of pile = 11.00 m

Axial load Vi = 48.250 ton
= 48.250 kg

Moment Mi = 1.650 t.m
= 165,000 kg.cm

diameter do = 40.00 cm
outer radius ro = 20.00 cm

M' = Mx + Vi x ro
= 165,000 + 48,250 x 20.00
= 165,000 + 965,000
= 1,130,000 kg.cm

excentrisitas $e = \frac{Mx}{Vi}$

$= \frac{165{,}000 \text{ kg.cm}}{48.250 \text{ kg}}$

= 3.42 cm

concrete covering a' = 2.50 cm
t = 7.50 cm
Inner diameter di = 40.00 – 15.00
= 25.00

inner radius ri = 12.50 cm
ro^2 = 400.00
ri^2 = 156.25
ro^2–ri^2 = 400.00 – 156.25
ro^2–ri^2 = 243.75 cm2

area of steel bar
As = 8 ø 16 --Ø 16
8.00 x 2.0106 = 16.08 cm2

As = 16.08 cm2

$Ys = \frac{\text{Area of bar.Y bar}}{\text{Area of bar}}$

$= \frac{16.08 \times 12.50}{16.08}$

$= \frac{201.06}{16.08}$

= 12.50 cm

teg–n

$$n = \frac{1,897,200}{242,201} = 7.83$$

$$p = \frac{\text{tot.A rea of steel bar}}{@pi.ro\,\hat{}\,2}$$

$$= \frac{16.08}{3.14 \times 400.00} = \frac{16.08}{1,256.64} = 0.01280$$

$$n.p = 7.83 \times 0.01280 = 1.54810$$

$$alpa = \frac{ri}{ro} = \frac{12.50}{20.00} = 0.63$$

$$e = 3.42 \text{ cm}$$

$$\frac{e}{ro} = \frac{3.42}{20.00} = 0.1710$$

$$\frac{e}{ro} = \frac{pi/4 - (5/12 - 1/6.\cos\hat{}\,2\,pi)\sin pi.\cos pi + (n.@pi.p)/2.(ri/ro)\hat{}\,2}{\sin pi/3.(2 + \cos\hat{}\,2\,pi) - pi.\cos pi - n.@pi.p\cos pi}$$

trial value of pi ---->>>>> pi = 167.8461 degree; pi = 2.9295 rad.

e = pi/4 − (5/12 − 1/6.cos ^ 2 pi)sin pi.cos pi + (n.@pi.p)/2.(alpa) ^ 2

pi/4 = A	=	2.9295	:	4.00	=	0.73	
n	=	7.83					
alpa	=	0.63 cm					
alpa ^ 2	=	0.39 cm ^ 2					
cos pi	=	(0.977586)					
Sin pi	=	0.210538					
Cos ^ 2 pi	=	0.955674					
1/6.cos ^ 2 pi	=	0.166667	x	0.955674	=	0.15928	
(5/12 − 1/6.cos ^ 2 pi)	=	0.416667	−	0.159279	=	0.257388	
Sin pi cos pi	=	0.210538	x	(0.977586)	=	(0.21)	
(5/12 − 1/6.cos ^ 2 pi) x sin pi.cos pi = B	=	0.25739	x	(0.97759)			= (0.25162)
(n.@pi.p)	=	1.55	x	3.14	=	4.86	
(n.@pi.p)/2	=	4.86	:	2.00	=	2.43	
(n.@pi.p)/2 x (alpa) ^ 2 = C	=	2.43	x	0.39			= 0.95
sum A − B + C	=	0.73	−	(0.25)	+	0.95	= 1.93

ro = sin pi/3.(2 + cos ^ 2 pi)−pi.cos pi − n.@pi.p cos pi

(Sin pi)/3	=	0.070					
(2 + cos ^ 2 pi)	=	2.000	+	0.956	=	2.956	
sin ø /3 x (2 + cos ^ 2 pi)	=	0.070	x	2.956	=	0.207	
pi.cos pi	=	2.929	x	(0.978)	=	(2.864)	
n.@pi.p	=	1.548	x	3.142	=	4.864	
n.@pi.p cos pi	=	4.864	x	(0.978)	=	(4.754)	
					=	7.826	

$$\frac{e}{ro} = \frac{1.93}{7.83} = 0.2471 \qquad pi = 167.85 \text{ rad}$$

$$\frac{e}{ro} = 0.1710$$

$$C = \frac{1 - \cos pi}{2\sin\hat{}\,3\,pi/3 - pi\cos pi + \sin pi\cos\hat{}\,2\,pi + pi/4 - \sin pi.\cos pi/4 - \sin\hat{}\,3.pi.\cos pi/6 \; @pi.np.(alpa\hat{}\,2/2 - \cos pi)}$$

Cos pi	=	(0.978)					
sin pi	=	0.211					
sin ^ 3 pi	=	0.009					
sin pi.cos pi	=	0.211	x	(0.978)	=	(0.206)	
Cos ^ 2pi	=	0.956					
1 − cos pi	=	1.000	−	(0.978)	=	1.978	
2.sin ^ 3 pi	=	2.000	x	0.009	=	0.019	
2.sin ^ 3 pi/3 = A	=	0.019	:	3.000			= 0.006
pi.cos pi = B	=	2.929	x	(0.978)			= (2.864)
sin pi.cos ^ 2 pi = C	=	0.211	x	0.956			= 0.201
pi/4 = D	=	0.732					= 0.732
Cos pi/4	=	(0.978)	:	4.000	=	(0.244)	
sin pi.cos pi/4 = E	=	0.211	x	(0.244)			= (0.051)
(sin ^ 3 pi.cos pi)	=	0.009	x	(0.978)	=	(0.009)	
(sin ^ 3 pi.cos pi)/6 = F	=	(0.009)	:	6.000			= (0.002)
n.p	=	1.548					
@pi.np	=	3.142	x	1.548	=	4.864	
alpa	=	0.625					
alpa ^ 2	=	0.391					
alpa ^ 2/2	=	0.391	:	2.000	=	0.195	
alpa ^ 2/2−cos pi	=	0.195	−	(0.978)	=	1.173	
@pi.np x alpa ^ 2/2	=	4.864	x	0.195	=	0.950	
@pi.np x alpa ^ 2/2−cos ø = G	=	0.950	−	(0.978)			= 1.927
sum = A − B + C + D − E − F + G							= 5.784

$$C = \frac{1 - \cos pi}{2\sin\hat{}\,3\,pi/3 - pi\cos pi + \sin pi\cos\hat{}\,2\,pi + pi/4 - \sin pi.\cos pi/4 - \sin\hat{}\,3.pi.\cos pi/6 \; @pi.np.(alpa\hat{}\,2/2 - \cos pi)}$$

$$C = \frac{1.977586}{5.784} = 0.34190$$

$$S = C \times \frac{alpa + \cos pi}{1 - \cos pi}$$

$$= 0.342 \times \frac{0.625 + (0.978)}{1.978}$$

$$= 0.342 \times (0.178)$$

$$= (0.061)$$

M' = 1,130.000 kg.cm

ro = 20.000 cm

teg−n

stres on concrete = fc

$$fc = \frac{M'}{ro^3} \times C$$

$$= \frac{1{,}130{,}000}{8.000} \times 0.342$$

$$= 141.250 \times 0.342$$

$$= 48.29 \text{ kg/cm2} > 70 \text{ kg/cm2}$$

stres on steel = fs

$$fs = \frac{M'}{ro^3} \times S \times n$$

$$= \frac{1{,}130{,}000}{8.000} \times (0.061) \times 8 \text{ kg/cm2}$$

$$= 141.250 \times (0.061) \times 8 \text{ kg/cm2}$$

$$= (67) \text{kg/cm2}$$

Project : Medan Flood Control Channel : Medan Flood Way Structure: Br – F 7 Station : Fw 38 + 78	Japan International Cooperation Agency (JICA)	Calculation sheet Date Nos of sheet Prepared by

III.7 Control stresses on pile
III.7.2 Case – IV, Normal Condition (HWL)

PC pile dia.400 mm

Depth embedded of pile = 11.00 m

Axial load Vi = 45.050 ton
= 45,050 kg

Moment Mi = 8.550 t.m
= 855,000 kg.cm

diameter do = 40.00 cm
outer radius ro = 20.00 cm

M' = Mx + Vi x ro
= 855,000 + 45,050 x 20.00
= 855,000 + 901,000
= 1,756,000 kg.cm

excentrisitas $e = \frac{Mx}{Vi}$

$$= \frac{855{,}000 \text{ kg.cm}}{45{,}050 \text{ kg}}$$

= 18.98 cm

concrete covering a' = 2.50 cm
t = 7.50 cm
Inner diameter di = 40.00 – 15.00
= 25.00

inner radius ri = 12.50 cm
ro^2 = 400.00
ri^2 = 156.25
ro^2–ri^2 = 400.00 – 156.25
ro^2–ri^2 = 243.75 cm2

area of steel bar
As = 8 ø 16 -- Ø 16
8.00 x 2.0106 = 16.08 cm2

As = 16.08 cm2

$$Ys = \frac{\text{Area of bar.Y bar}}{\text{Area of bar}}$$

$$= \frac{16.08 \times 12.50}{16.08}$$

$$= \frac{201.06}{16.08}$$

= 12.50 cm

$$n = \frac{1,897,200}{242,201} = 7.83$$

$$p = \frac{\text{tot.A rea of steel bar}}{@pi.ro\,\hat{}\,2}$$

$$= \frac{16.08}{3.14 \times 400.00} = \frac{16.08}{1,256.64}$$

$$p = 0.01280$$

$$n.p = 7.83 \times 0.01280$$

$$= 1.54810$$

$$alpa = \frac{ri}{ro} = \frac{12.50}{20.00} = 0.63$$

$$e = 18.98 \text{ cm}$$

$$\frac{e}{ro} = \frac{18.98}{20.00} = 0.9489$$

$$\frac{e}{ro} = \frac{pi/4 - (5/12 - 1/6.\cos\hat{}2\,pi)\sin pi.\cos pi + (n.@pi.p)/2.(ri/ro)\hat{}2}{\sin pi/3.(2 + \cos\hat{}2\,pi) - pi.\cos pi - n.@pi.p\cos pi}$$

trial value of pi ---->>>>

pi	=	97.3309 degree
pi	=	1.6987 rad.

e = pi/4 − (5/12 − 1/6.cos^2 pi)sin pi.cos pi + (n.@pi.p)/2.(alpa)^2

pi/4 = A	=	1.6987	:	4.00	=	0.42
n	=	7.83				
alpa	=	0.63 cm				
alpa^2	=	0.39 cm^2				
cos pi	=	(0.127599)				
Sin pi	=	0.991826				
Cos^2 pi	=	0.016282				
1/6.cos^2 pi	=	0.166667	x	0.016282	=	0.00271
(5/12 − 1/6.cos^2 pi)	=	0.416667	−	0.002714	=	0.413953
Sin pi cos pi	=	0.991826	x	(0.127599)	=	(0.13)
(5/12 − 1/6.cos^2 pi) x sin pi.cos pi = B	=	0.41395	x	(0.12760)	=	(0.05282)
(n.@pi.p)	=	1.55	x	3.14	=	4.86
(n.@pi.p)/2	=	4.86	:	2.00	=	2.43
(n.@pi.p)/2 x (alpa)^2 = C	=	2.43	x	0.39	=	0.95
sum A − B + C	=	0.42	−	(0.05)	+	0.95 = 1.43

ro = sin pi/3.(2 + cos^2 pi)−pi.cos pi − n.@pi.p cos pi

(Sin pi)/3	=	0.331				
(2 + cos^2 pi)	=	2.000	+	0.016	=	2.016
sin ø/3 x (2 + cos^2 pi)	=	0.331	x	2.016	=	0.667
pi.cos pi	=	1.699	x	(0.128)	=	(0.217)
n.@pi.p	=	1.548	x	3.142 =	4.864	
n.@pi.p cos pi	=	4.864	x	(0.128)	=	(0.621)
					=	1.504

$$\frac{e}{ro} = \frac{1.43}{1.50} \qquad pi = 97.33 \text{ rad}$$

$$\frac{e}{ro} = 0.9491 \qquad \frac{e}{ro} = 0.9489$$

$$C = \frac{1 - \cos pi}{2\sin\hat{}3\,pi/3 - pi\cos pi + \sin pi\cos\hat{}2\,pi + pi/4 - \sin pi.\cos pi/4 - \sin\hat{}3.pi.\cos pi/6 \;@pi.np.(alpa\hat{}2/2 - \cos pi)}$$

Cos pi	=	(0.128)				
sin pi	=	0.992				
sin^3 pi	=	0.976				
sin pi.cos pi	=	0.992	x	(0.128) =	(0.127)	
Cos ^ 2pi	=	0.016				
1 − cos pi	=	1.000	−	(0.128) =	1.128	
2.sin^3 pi	=	2.000	x	0.976 =	1.951	
2.sin^3 pi/3 = A	=	1.951	:	3.000	=	0.650
pi.cos pi = B	=	1.699	x	(0.128)	=	(0.217)
sin pi.cos^2 pi = C	=	0.992	x	0.016	=	0.016
pi/4 = D	=	0.425			=	0.425
Cos pi/4	=	(0.128)	:	4.000 =	(0.032)	
sin pi.cos pi/4 = E	=	0.992	x	(0.032)	=	(0.032)
(sin^3 pi.cos pi)	=	0.976	x	(0.128) =	(0.124)	
(sin^3 pi.cos pi)/6 = F	=	(0.124)	:	6.000	=	(0.021)
n.p	=	1.548				
@pi.np	=	3.142	x	1.548 =	4.864	
alpa	=	0.625				
alpa^2	=	0.391				
alpa^2/2	=	0.391	:	2.000 =	0.195	
alpa^2/2−cos pi	=	0.195	−	(0.128) =	0.323	
@pi.np x alpa^2/2	=	4.864	x	0.195 =	0.950	
@pi.np x alpa^2/2−cos ø = G	=	0.950	−	(0.128)	=	1.078
sum = A − B + C + D − E − F + G					=	2.438

$$C = \frac{1 - \cos pi}{2\sin\hat{}3\,pi/3 - pi\cos pi + \sin pi\cos\hat{}2\,pi + pi/4 - \sin pi.\cos pi/4 - \sin\hat{}3.pi.\cos pi/6 \;@pi.np.(alpa\hat{}2/2 - \cos pi)}$$

$$C = \frac{1.127599}{2.438} = 0.46252$$

$$S = C \times \frac{alpa + \cos pi}{1 - \cos pi}$$

$$= 0.463 \times \frac{0.625 + (0.128)}{1.128}$$

$$= 0.463 \times 0.441$$

$$= 0.204$$

M' = 1,756,000 kg.cm

ro = 20.000 cm

stres on concrete = fc

$$fc = \frac{M'}{ro^{\wedge}3} \times C$$

$$= \frac{1,756,000}{8,000} \times 0.463$$

$$= 219.500 \times 0.463$$

$$= 101.52 \text{ kg/cm2} < 180 \text{ kg/cm2}$$

stres on steel = fs

$$fs = \frac{M'}{ro^{\wedge}3} \times S \times n$$

$$= \frac{1,756,000}{8,000} \times 0.204 \times 8 \text{ kg/cm2}$$

$$= 219.500 \times 0.204 \times 8 \text{ kg/cm2}$$

$$= 351 \text{ kg/cm2}$$

teq-q

Project	: Medan Flood Control	Japan International Cooperation Agency (JICA)	Calculation sheet
Channel	: Medan Flood Way		Date
Structure	: Br – F 7		Nos of sheet
Station	: Fw 38 + 78		Prepared by

III.1.8 Combined load at Abutment section
Case – I. Normal Condition (HWL)

Ka	= 0.297		Ywet	= 1.850	t/m3
Ht	= 6.300	m	Ysat	= 2.000	t/m3
Yw	= 1.000	t/m3	q	= 1.000	t/m2
Yc	= 2.400	t/m3			

Description	Total load (ton) Dead load	Line load	Uniform load	Pedestrian load	Total load	Nos of bearing	Width
Left side span	184.74	27.27	117.89	11.40	341.30	2.00	5.50
load per m width	16.795	2.479	10.717	1.036	31.027		

Section 1 – 1 H1 = 1.245 m W1 = 0.300 m

Load		Description Y	x	Hn	x	Wn	=	Weight	Vo	Ho	Xo	Yo	M = Vo.Yo
		m		m		t/m3		ton	ton	ton	m	m	m
C1	=			2.40	x	1.245	x	0.30 = 0.896	0.896				
				q	x	H							
Pq	=			1.00	x	1.245		= 1.245		1.245		0.623	0.775
Pa1		0.5	x	Y	x	H1^2	x	Ka					
	=	0.5	x	1.85	x	1.55	x	0.297 = 0.426		0.426		0.415	
total									0.896	1.671			0.775

Section 2 – 2

H1	= 1.245 m	W1	= 0.30 m		
H4	= 0.500 m	W4	= 0.55 m		
H5	= 0.500 m	W5	= 0.55 m		

Load		Description Yc	x	H	x	W	=	Weight	Vo	Ho	Xo	Yo	M = Vo.Yo
		m		m		t/m3		ton	ton	ton	m	m	t.m
C1	=			2.40	x	1.245	x	0.30 = 0.896	0.896		0.150		0.134
C2	=			2.40	x	0.500	x	0.55 = 0.660	0.660		0.275		0.182
C3	=	0.5	x	2.40	x	0.500	x	0.55 = 0.330	0.330		0.275		0.091
E1	=			q	x	H	x	W					
	=			1.00	x	1.245	x	0.25 = 0.311	0.311		0.275		0.086
total									2.198				0.492

Section 3 – 3

H1	= 1.245 m	W1	= 0.300 m	H1 + H4	= 1.745 m		
H2	= 1.000 m	W2	= 1.000 m	Pe	= 3.963 ton (by earthquake)		
H4	= 0.500 m	W4	= 0.550 m	He=H4+H5	= 1.000 m		
H5	= 0.500 m	W5	= 0.550 m				
H6	= 0.500 m	W6	= 0.200 m				
H7	= 0.500 m	W7	= 0.200 m				

mqh-1

Load		W Description Y	x	H	x	W	=	Weight	Vo	Ho	Xo	Yo	M
		m		m		t/m3		ton	ton	ton	m	m	t.m
C1	=			2.40	x	1.245	x	0.30 = 0.896	0.896				
C4	=			2.40	x	1.000	x	1.00 = 2.400	2.400				
C5	=	0.5	x	2.40	x	0.500	x	0.55 = 0.330	0.330				
C2	=			2.40	x	0.500	x	0.55 = 0.660	0.660				

mnh-1

C6	=		2.40	x	0.500	x	0.20	=	0.240	0.240				
C7	=	0.5 x	2.40	x	0.500	x	0.20	=	0.120	0.120				
Pe								=	3.963		3.963		1.00	3.963
Pq	=		1.00	x	1.745	x	0.20	=	0.349		0.349		0.873	0.305
Pa	=	0.5 x	1.85	x	1.745	x	0.297	=	0.479		0.479		0.582	0.279
Rv	=								31.027	31.027				
			sum							35.674	4.791			4.546

Section 4 – 4

Top deck elv	=	34.750	m				
Hwl elv.	=	32.300	m				
Hwc elv.	=	0.500	m				
H back fill	=	Ht	–	H3			
	=	6.3	–	1.00	=	5.30	m
Top footing elv.	=	34.750	–	5.300	=	29.450	m
H wet soil	=	34.75	–	32.3	=	2.450	m
H sat soil	=	5.3	–	2.45	=	2.85	m

H1	=	1.245	m	W1	=	0.300 m
H2	=	3.755	m	W2	=	1.000 m
H4	=	0.500	m	W4	=	0.550 m
H5	=	0.500	m	W5	=	0.550 m
H6	=	0.500	m	W6	=	0.200 m
H7	=	0.500	m	W7	=	0.200 m

H wet = 2.45 : 3 + 2.85 = 3.667 m

mqh–1

Load		Description							Ho	Xo	Yo	M = Ho.Yo
		Y	x	Hn	x	Wn	Weight	Vo				
		m		m		m	ton	ton	ton	m	m	t.m
C1	=		2.40	x	1.25	x	0.30 =	0.896	0.896					
C4	=		2.40	x	1.00	x	1.00 =	2.400	2.400					
C5	=	0.5 x	2.40	x	0.50	x	0.55 =	0.330	0.330					
C2	=		2.40	x	0.50	x	0.55 =	0.660	0.660					
C6	=		2.40	x	1.00	x	0.20 =	0.480	0.480					
C7	=	0.5 x	2.40	x	0.50	x	0.20 =	0.120	0.120					
Pe							=	3.963		3.963		3.755		14.881
Pq1	=		1.00	x	5.30	x	1.00 =	5.300		5.300		2.650		14.045
Pw1	=	0.5 x	1.85	x	6.003	x	0.297 =	1.649		1.649		14.433		23.801
Ps1	=	0.5 x	2.00	x	8.122	x	0.297 =	2.412		2.412		0.950		2.292
Ps2			2.00	x	2.85	x	0.297 =	1.693		1.693		1.425		2.412
Pw1	=	0.5 x	1.00	x	9.922	x	1.00 =	4.961		4.961		1.050		5.209
Pwr	=	0.5 x	1.00	x	8.122	x	1.00 =	(4.061)		(4.061)		0.950		(3.858)
Rv	=							31.027	31.027					
		sum							35.914	15.917				58.782

Section 5 – 5

H1	=	0.300	m	W1	=	1.80 m
H2	=	1.000	m	W2	=	1.80 m
H wet.r	=	2.450	–	1.245	=	1.21 m
H sat.r	=	2.850	m			

mnh–1

Load		Description							Ho	Xo	Yo	M = Vo.Xo
		Y	x	H	x	W	= Weight	Vo				
		m		m		t/m3	ton	ton	ton	m	m	t.m
C1	=	0.5 x	2.40	x	0.30	x	1.80 =	0.648	0.648		0.600			0.389
C2	=		2.40	x	1.00	x	1.80 =	4.320	4.320		0.900			3.888
E1(wet)	=		1.85	x	1.21	x	1.80 =	4.013	4.013		0.900			3.611
E1(sat)	=		2.00	x	2.850	x	1.80 =	10.260	10.260		0.900			9.234
U1(up lift)	=		(1.00)	x	2.85	x	1.80 =	(5.130)	(5.130)		0.900			(4.617)
Rp 4							=	(34.030)	(34.030)		1.175			(39.985)
Rp 3							=	(31.470)	(31.470)		0.625			(19.669)
		total					=		(51.389)					(47.149)

Section 6 – 6

H 3.1	=	0.300	m	W1	=	2.30 m
H 3.2	=	1.000	m	W2	=	2.30 m
H wet	=	2.450	m			
H sat	=	2.850	m			

Load		Description							Ho	Xo	Yo	M = Vo.Xo
		Y	x	H	x	W	= Weight	Vo				
		m		m		t/m3	ton	ton	ton	m	m	t.m
C 3.1	=	0.5 x	2.40	x	0.300	x	2.30 =	0.828	0.828		0.767			0.635
C 3.2	=		2.40	x	1.000	x	2.30 =	5.520	5.520		1.150			6.348
E1(wet)	=		1.85	x	2.450	x	2.30 =	10.425	10.425		1.150			11.988
E1(sat)	=		2.00	x	2.850	x	2.30 =	13.110	13.110		1.150			15.076
U1(up lift)	=		1.00	x	2.850	x	2.30 =	6.555	6.555		1.150			7.538
Rp 1							=	(27.430)	(27.430)		1.675			(45.945)
Rp 2							=	(29.450)	(29.450)		0.625			(18.406)
		total					=		(20.442)					(22.765)

mnh–1

Project : Medan Flood Control	Japan International Cooperation Agency (JICA)	Calculation sheet
Channel : Medan Flood Way		Date
Structure : Br. Mf 7		Nos of sheet
Station : Fw 38 + 78		Prepared by

III.8.2 Normal Condition
Case – II, Low Water Level

Ka	=	0.297	Ywet	=	1.850	t/m3
Ht	=	6.300 m	Ysat	=	2.000	t/m3
Yw	=	1.000 t/m3	q	=	1.000	t/m2
Yc	=	2.400 t/m3				

Description	Total load (ton) Dead load	Line load	Uniform load	Pedestrian load	Total load	Nos of bearing	Width
Left side span	485.37	27.27	190.60	18.60	721.84	2.00	10.00
load per m wid	24.269	1.364	9.530	0.930	36.092		

Section 1 – 1 H1 = 1.945 m W1 = 0.300 m

Load		Description Y (m)	x	Hn (m)	x	Wn (t/m3)	=	Weight (ton)	Vo (ton)	Ho (ton)	Xo (m)	Yo (m)	M = Vo.Yo (m)
C1	=	2.40	x	1.945	x	0.30	=	1.400	1.400				
		q	x	H									
Pq	=	1.00	x	1.945			=	1.945		1.945		0.973	1.892
Pa1		0.5	x	Y	x	H1^2	x	Ka					
	=	0.5	x	1.85	x	3.78	x	0.297	= 1.039		1.039		0.648
total									1.400	2.984			1.892

Section 2 – 2

H1	=	1.945 m	W1	=	0.30 m
H4	=	0.500 m	W4	=	0.55 m
H5	=	0.500 m	W5	=	0.55 m

Load		Description Yc (m)	x	H (m)	x	W (t/m3)	=	Weight (ton)	Vo (ton)	Ho (ton)	Xo (m)	Yo (m)	M = Vo.Yo (t.m)
C1	=	2.40	x	1.945	x	0.30	=	1.400	1.400		0.150		0.210
C2	=	2.40	x	0.500	x	0.55	=	0.660	0.660		0.275		0.182
C3	= 0.5 x	2.40	x	0.500	x	0.55	=	0.330	0.330		0.275		0.091
E1	=	q	x	H	x	W							
	=	1.00	x	1.945	x	0.25	=	0.486	0.486		0.275		0.134
total									2.877				0.616

Section 3 – 3

H1	=	1.945 m	W1	=	0.300 m	H1 + H4	=	2.445 m
H2	=	1.000 m	W2	=	1.000 m	Pe	=	3.963 ton (by earthquake)
H4	=	0.500 m	W4	=	0.550 m	He=H4+H5	=	1.000 m
H5	=	0.500 m	W5	=	0.550 m			
H6	=	0.500 m	W6	=	0.200 m			
H7	=	0.500 m	W7	=	0.200 m			

Load		W Description Y (m)	x	H (m)	x	W (t/m3)	=	Weight (ton)	Vo (ton)	Ho (ton)	Xo (m)	Yo (m)	M (t.m)
C1	=	2.40	x	1.945	x	0.30	=	1.400	1.400				
C4	=	2.40	x	1.000	x	1.00	=	2.400	2.400				
C5	= 0.5 x	2.40	x	0.500	x	0.55	=	0.330	0.330				
C2	=	2.40	x	0.500	x	0.55	=	0.660	0.660				
C6	=	2.40	x	0.500	x	0.20	=	0.240	0.240				
C7	= 0.5 x	2.40	x	0.500	x	0.20	=	0.120	0.120				
Pe							=	3.963		3.963		1.00	3.963
Pq	=	1.00	x	2.445	x	0.20	=	0.489		0.489		1.223	0.598
Pa	= 0.5 x	1.85	x	2.445	x	0.297	=	0.672		0.672		0.815	0.547
Rv	=							36.092	36.092				
sum									41.242	5.124			5.108

Section 4 – 4

Top deck e	=	10.651 m		Lwl	=	4.006 m	
Hwl elv.	=	7.706 m					
Hwe elv.	=	7.006 m					
H back fill	=	Ht	–	H3			
	=	6.3	–	1.00	=	5.30 m	
Top footin	=	10.651	–	5.300	=	5.351 m	
H wet soil	=	10.651	–	5.351	=	5.300 m	
H sat soil	=	5.3	–	5.3	=	0 m	

H1	=	1.945 m	W1	=	0.300 m
H2	=	3.355 m	W2	=	1.000 m
H4	=	0.500 m	W4	=	0.550 m
H5	=	0.500 m	W5	=	0.550 m
H6	=	0.500 m	W6	=	0.200 m
H7	=	0.500 m	W7	=	0.200 m
H wet	=	5.3 :	3 +	0	= 1.767 m

Load		Description Y (m)	x	Hn (m)	x	Wn (m)	Weight (ton)	Vo (ton)	Ho (ton)	Xo (m)	Yo (m)	M = Ho.Yo (t.m)
C1	=	2.40	x	1.95	x	0.30 =	1.400	1.400				
C4	=	2.40	x	1.00	x	1.00 =	2.400	2.400				
C5	= 0.5 x	2.40	x	0.50	x	0.55 =	0.330	0.330				
C2	=	2.40	x	0.50	x	0.55 =	0.660	0.660				
C6	=	2.40	x	1.00	x	0.20 =	0.480	0.480				
C7	= 0.5 x	2.40	x	0.50	x	0.20 =	0.120	0.120				
Pe						=	3.963		3.963		3.355	13.296
Pq1	=	1.00	x	5.30	x	1.00 =	5.300		5.300		2.650	14.045
Pw1	= 0.5 x	1.85	x	28.090	x	0.297 =	7.717		7.717		3.550	27.398
Ps1	= 0.5 x	2.00	x	0.00	x	0.297 =	0.000		0.000		0.000	0.000
Ps2		2.00	x	0.00	x	0.297 =	0.000		0.000		0.000	0.000
Pwl	= 0.5 x	1.00	x	0.090	x	1.00 =	0.045		0.045		0.100	0.005
Pwr	= 0.5 x	1.00	x	0.00	x	1.00 =	0.000		0.000		0.000	0.000
Rv	=						36.092	36.092				
sum								41.482	17.025			54.743

Section 5 – 5

H1	=	0.300 m	W1	=	1.80 m
H2	=	1.000 m	W2	=	1.80 m
H wet.r	=	5.300 –	1.945	=	3.36 m
H sat.r	=	0.000 m			

Load		Description Y (m)	x	H (m)	x	W (t/m3)	=	Weight (ton)	Vo (ton)	Ho (ton)	Xo (m)	Yo (m)	M = Vo.Xo (t.m)
C1	= 0.5 x	2.40	x	0.30	x	1.80	=	0.648	0.648		0.600		0.389
C2	=	2.40	x	1.00	x	1.80	=	4.320	4.320		0.900		3.888
E1(wet)	=	1.85	x	3.36	x	1.80	=	11.172	11.172		0.900		10.055
E1(sat)	=	2.00	x	0.000	x	1.80	=	0.000	0.000		0.900		0.000
U1(up lift)	=	(1.00)	x	0.00	x	1.80	=	0.000	0.000		0.900		0.000
Rp 4							=	(41.240)	(41.240)		1.175		(48.457)
Rp 3							=	(35.580)	(35.580)		0.625		(22.238)
total							=		(60.680)				(56.363)

Section 6 – 6

H3.1 = 0.300 m W1 = 2.30 m
H3.2 = 1.000 m W2 = 2.30 m
H wet = 5.300 m
H sat = 0.000 m

Load	Description Y	x	H	x	W	= Weight	Vo	Ho	Xo	Yo	M = Vo.Xo
	m		m		t/m3	ton	ton	ton	m	m	t.m
C3.1 =	0.5 x 2.40	x	0.300	x	2.30	= 0.828	0.828		0.767		0.635
C3.2 =	2.40	x	1.000	x	2.30	= 5.520	5.520		1.150		6.348
E1(wet) =	1.85	x	5.300	x	2.30	= 22.551	22.551		1.150		25.934
E1(sat) =	2.00	x	0.000	x	2.30	= 0.000	0.000		1.150		0.000
U1(up lift) =	1.00	x	0.000	x	2.30	= 0.000	0.000		1.150		0.000
Rp 1						= (28.590)	(28.590)		1.675		(47.888)
Rp 2						= (32.080)	(32.080)		0.625		(20.050)
total						=	(31.771)				(35.021)

mqh-2

Project : Medan Flood Control Channel : Medan Flood Way Structure : Br. Mf 7 Station : Fw 38 + 78	Japan International Cooperation Agency (JICA)	Calculation sheet Date Nos of sheet Prepared by

III.8.3 Earthquake Condition
Case – III, High Water Level

Ka	= 0.407		Ywet	= 1.850	t/m3
Ht	= 6.300	m	Ysat	= 2.000	t/m3
Yw	= 1.000	t/m3	q	= 0.500	t/m2
Yc	= 2.400	t/m3			

Description	Total load (ton) Dead load	Line load	Uniform load	Pedestrian load	Total load	Nos of bearing	Width
Left side span	485.37	27.27	190.60	18.60	721.84	2.00	10.00
load per m wid	24.269	1.364	9.530	0.930	36.092		

Section 1 – 1 H1 = 1.945 m W1 = 0.300 m

Load	Description Y	x	Hn	x	Wn	= Weight	Vo	Ho	Xo	Yo	M = Vo.Yo
	m		m		t/m3	ton	ton	ton	m	m	m
C1 =			2.40	x	1.945	x 0.30 = 1.400	1.400				
	q	x	H								
Pq =			0.50	x	1.945	= 0.973		0.973		0.973	0.946
Pa1	0.5 x	Y	x	H1^2	x	Ka					
=	0.5 x	1.85	x	3.78	x	0.407 = 1.424		1.424		0.648	
total							1.400	2.397			0.946

Section 2 – 2

H1 = 1.945 m W1 = 0.30 m
H4 = 0.500 m W4 = 0.55 m
H5 = 0.500 m W5 = 0.55 m

Load	Description Yc	x	H	x	W	= Weight	Vo	Ho	Xo	Yo	M = Vo.Yo
	m		m		t/m3	ton	ton	ton	m	m	t.m
C1 =			2.40	x	1.945	x 0.30 = 1.400	1.400		0.150		0.210
C2 =			2.40	x	0.500	x 0.55 = 0.660	0.660		0.275		0.182
C3 =	0.5 x	2.40	x	0.500	x	0.55 = 0.330	0.330		0.275		0.091
E1 =	q	x	H	x	W						
=	0.50	x	1.945	x	0.25	= 0.243	0.243		0.275		0.067
total							2.634				0.549

Section 3 – 3

H1 =	1.945	m	W1 =	0.300	m	H1 + H4 =	2.445 m
H2 =	1.000	m	W2 =	1.000	m	Pe =	3.963 ton (by earthquake)
H4 =	0.500	m	W4 =	0.550	m	He=H4+H5 =	1.000 m
H5 =	0.500	m	W5 =	0.550	m		
H6 =	0.500	m	W6 =	0.200	m		
H7 =	0.500	m	W7 =	0.200	m		

Load	W Description Y	x	H	x	W	= Weight	Vo	Ho	Xo	Yo	M
	m		m		t/m3	ton	ton	ton	m	m	t.m
C1 =			2.40	x	1.945	x 0.30 = 1.400	1.400				
C4 =			2.40	x	1.000	x 1.00 = 2.400	2.400				
C5 =	0.5 x		2.40	x	0.500	x 0.55 = 0.330	0.330				
C2 =			2.40	x	0.500	x 0.55 = 0.660	0.660				

mqh-3

C6	=			2.40	x	0.500	x	0.20	=	0.240	0.240			
C7	=	0.5	x	2.40	x	0.500	x	0.20	=	0.120	0.120			
Pe									=	3.963		3.963		1.00	3.963
Pq	=			0.50	x	2.445	x	0.20	=	0.245		0.245		1.223	0.299
Pa	=	0.5	x	1.85	x	2.445	x	0.407	=	0.920		0.920		0.815	0.750
Rv	=									36.092	36.092				
				sum							41.242	5.128			5.012

Section 4 – 4

Top deck e	=	10.651	m				
Hwl elv.	=	7.706	m				
Hwe elv.	=	7.006	m				
H back fill	=	Ht	–	H3			
	=	6.3	–	1.00	=	5.30	m
Top footin	=	10.651	–	5.300	=	5.351	m
H wet soil	=	10.651	–	7.706	=	2.945	m
H sat soil	=	5.3	–	2.945	=	2.355	m

H1	=	1.945	m	W1	=	0.300 m
H2	=	3.355	m	W2	=	1.000 m
H4	=	0.500	m	W4	=	0.550 m
H5	=	0.500	m	W5	=	0.550 m
H6	=	0.500	m	W6	=	0.200 m
H7	=	0.500	m	W7	=	0.200 m

H wet = 2.945 : 3 + 2.355 = 3.337 m

Load		Description								Weight	Vo	Ho	Xo	Yo	M = Ho.Yo
			Y	x	Hn	x	Wn								
			m		m		m			ton	ton	ton	m	m	t.m
C1	=		2.40	x	1.95	x	0.30	=		1.400	1.400				
C4	=		2.40	x	1.00	x	1.00	=		2.400	2.400				
C5	=	0.5	x 2.40	x	0.50	x	0.55	=		0.330	0.330				
C2	=		2.40	x	0.50	x	0.55	=		0.660	0.660				
C6	=		2.40	x	1.00	x	0.20	=		0.480	0.480				
C7	=	0.5	x 2.40	x	0.50	x	0.20	=		0.120	0.120				
Pe								=		3.963		3.963		3.355	13.296
Pq1	=		0.50	x	5.30	x	1.00	=		2.650		2.650		2.650	7.023
Pw1	=	0.5	x 1.85	x	8.673	x	0.407	=		3.265		3.265		5.905	19.282
Ps1	=	0.5	x 2.00	x	5.546	x	0.407	=		2.257		2.257		0.785	1.772
Ps2			2.00	x	2.355	x	0.407	=		1.917		1.917		1.178	2.257
Pwl	=	0.5	x 1.00	x	7.049	x	1.00	=		3.525		3.525		0.885	3.119
Pwr	=	0.5	x 1.00	x	5.546	x	1.00	=		(2.773)		(2.773)		0.785	(2.177)
Rv	=									36.092	36.092				
			sum								41.482	14.804			44.572

Section 5 – 5

H1	=	0.300	m	W1	=	1.80 m
H2	=	1.000	m	W2	=	1.80 m
H wet.r	=	2.945	–	1.945	=	1.00 m
H sat.r	=	2.355	m			

Load		Description									Weight	Vo	Ho	Xo	Yo	M = Vo.Xo
			Y	x	H	x	W	=								
			m		m		t/m3				ton	ton	ton	m	m	t.m
C1	=	0.5	x 2.40	x	0.30	x	1.80	=			0.648	0.648		0.600		0.389
C2	=		2.40	x	1.00	x	1.80	=			4.320	4.320		0.900		3.888
E1(wet)	=		1.85	x	1.00	x	1.80	=			3.330	3.330		0.900		2.997
E1(sat)	=		2.00	x	2.355	x	1.80	=			8.478	8.478		0.900		7.630
U1(up lift)	=		(1.00)	x	2.36	x	1.80	=			(4.239)	(4.239)		0.900		(3.815)
Rp 4								=			(30.040)	(30.040)		1.175		(35.297)
Rp 3								=			(27.100)	(27.100)		0.625		(16.938)
			total					=				(44.603)				(41.146)

mqh–3

Section 6 – 6

H 3.1	=	0.300	m	W1	=	2.30 m
H 3.2	=	1.000	m	W2	=	2.30 m
H wet	=	2.945	m			
H sat	=	2.355	m			

Load		Description									Weight	Vo	Ho	Xo	Yo	M = Vo.Xo
			Y	x	H	x	W	=								
			m		m		t/m3				ton	ton	ton	m	m	t.m
C 3.1	=	0.5	x 2.40	x	0.300	x	2.30	=			0.828	0.828		0.767		0.635
C 3.2	=		2.40	x	1.000	x	2.30	=			5.520	5.520		1.150		6.348
E1(wet)	=		1.85	x	2.945	x	2.30	=			12.531	12.531		1.150		14.411
E1(sat)	=		2.00	x	2.355	x	2.30	=			10.833	10.833		1.150		12.458
U1(up lift)	=		1.00	x	2.355	x	2.30	=			5.417	5.417		1.150		6.229
Rp 1								=			(34.460)	(34.460)		1.675		(57.720)
Rp 2								=			(30.780)	(30.780)		0.625		(19.238)
			total					=				(30.112)				(36.878)

mqh–3

Project : Medan Flood Control	Japan International Cooperation Agency (JICA)	Calculation sheet	
Channe : Medan Flood Way		Date	
Structur : Br. Mf 7		Nos of sheet	
Station : Fw 38 + 78		Prepared by	

III.8.4 Earthquake condition
Case – IV. Low Water Level

Ka	=	0.407	Ywet	=	1.850	t/m3
Ht	=	6.300 m	Ysat	=	2.000	t/m3
Yw	=	1.000 t/m3	q	=	0.500	t/m2
Yc	=	2.400 t/m3				

Description	Total load (ton) Dead load	Line load	Uniform load	Pedestrian load	Total load	Nos of bearing	Width
Left side spar	485.37	27.27	190.60	18.60	721.84	2.00	10.00
load per m wi	24.269	1.364	9.530	0.930	36.092		

Section 1 – 1 H1 = 1.945 m W1 = 0.300 m

Load		Description Y	x	Hn	x	Wn	=	Weight	Vo	Ho	Xo	Yo	M = Vo.Yo
		m		m		t/m3		ton	ton	ton	m	m	m
C1	=	2.40	x	1.945	x	0.30	=	1.400	1.400				
		q	x	H									
Pq	=	0.50	x	1.945			=	0.973		0.973		0.973	0.946
Pa1		0.5 x	Y	x	H1^2	x	Ka						
	=	0.5 x	1.85	x	3.78	x	0.407	= 1.424		1.424		0.648	
		total							1.400	2.397			0.946

Section 2 – 2

H1	=	1.945 m	W1	=	0.30 m
H4	=	0.500 m	W4	=	0.55 m
H5	=	0.500 m	W5	=	0.55 m

Load		Description Yc	x	H	x	W	=	Weight	Vo	Ho	Xo	Yo	M = Vo.Yo
		m		m		t/m3		ton	ton	ton	m	m	t.m
C1	=	2.40	x	1.945	x	0.30	=	1.400	1.400		0.150		0.210
C2	=	2.40	x	0.500	x	0.55	=	0.660	0.660		0.275		0.182
C3	= 0.5 x	2.40	x	0.500	x	0.55	=	0.330	0.330		0.275		0.091
E1	=	q	x	H	x	W							
	=	0.50	x	1.945	x	0.25	=	0.243	0.243		0.275		0.067
		total							2.634				0.549

Section 3 – 3

H1	=	1.945 m	W1	=	0.300 m	H1 + H4	=	2.445 m
H2	=	1.000 m	W2	=	1.000 m	Pe	=	3.963 ton (by earthquake)
H4	=	0.500 m	W4	=	0.550 m	He=H4+H5	=	1.000 m
H5	=	0.500 m	W5	=	0.550 m			
H6	=	0.500 m	W6	=	0.200 m			
H7	=	0.500 m	W7	=	0.200 m			

Load		W Description Y	x	H	x	W	=	Weight	Vo	Ho	Xo	Yo	M
		m		m		t/m3		ton	ton	ton	m	m	t.m
C1	=	2.40	x	1.945	x	0.30	=	1.400	1.400				
C4	=	2.40	x	1.000	x	1.00	=	2.400	2.400				
C5	= 0.5 x	2.40	x	0.500	x	0.55	=	0.330	0.330				
C2	=	2.40	x	0.500	x	0.55	=	0.660	0.660				
C6	=	2.40	x	0.500	x	0.20	=	0.240	0.240				
C7	= 0.5 x	2.40	x	0.500	x	0.20	=	0.120	0.120				
Pe							=	3.963		3.963		1.00	3.963
Pq	=	0.50	x	2.445	x	0.20	=	0.245		0.245		1.223	0.299
Pa	= 0.5 x	1.85	x	2.445	x	0.407	=	0.920		0.920		0.815	0.750
Rv	=							36.092	36.092				
		sum							41.242	5.128			5.012

Section 4 – 4

Top deck	=	10.651 m		Lwl	=	4.006 m	
Hwl elv.	=	7.706 m					
Hwc elv.	=	7.006 m					
H back fi	=	Ht	–	H3			
	=	6.3	–	1.00	=	5.30 m	
Top fooi	=	10.651	–	5.300	=	5.351 m	
H wet soi	=	10.651	–	5.351	=	5.300 m	
H sat soil	=	5.3	–	5.3	=	0 m	

H1	=	1.945 m	W1	=	0.300 m
H2	=	3.355 m	W2	=	1.000 m
H4	=	0.500 m	W4	=	0.550 m
H5	=	0.500 m	W5	=	0.550 m
H6	=	0.500 m	W6	=	0.200 m
H7	=	0.500 m	W7	=	0.200 m
H wet	=	5.3 :	3 +	0	= 1.767 m

Load		Description Y	x	Hn	x	Wn	Weight	Vo	Ho	Xo	Yo	M = Ho.Yo
		m		m		m	ton	ton	ton	m	m	t.m
C1	=	2.40	x	1.95	x	0.30	= 1.400	1.400				
C4	=	2.40	x	1.00	x	1.00	= 2.400	2.400				
C5	= 0.5 x	2.40	x	0.50	x	0.55	= 0.330	0.330				
C2	=	2.40	x	0.50	x	0.55	= 0.660	0.660				
C6	=	2.40	x	1.00	x	0.20	= 0.480	0.480				
C7	= 0.5 x	2.40	x	0.50	x	0.20	= 0.120	0.120				
Pe							= 3.963		3.963		3.355	13.296
Pq1	=	0.50	x	5.30	x	1.00	= 2.650		2.650		2.650	7.023
Pw1	= 0.5 x	1.85	x	28.090	x	0.407	= 10.575		10.575		3.550	37.545
Ps1	= 0.5 x	2.00	x	0.00	x	0.407	= 0.000		0.000		0.000	0.000
Ps2		2.00	x	0.00	x	0.407	= 0.000		0.000		0.000	0.000
Pwl	= 0.5 x	1.00	x	0.090	x	1.00	= 0.045		0.045		0.100	0.005
Pwr	= 0.5 x	1.00	x	0.00	x	1.00	= 0.000		0.000		0.000	0.000
Rv	=						36.092	36.092				
		sum						41.482	17.233			57.868

Section 5 – 5

H1	=	0.300 m	W1	=	1.80 m
H2	=	1.000 m	W2	=	1.80 m
H wet.r	=	5.300 –	1.945	=	3.36 m
H sat.r	=	0.000 m			

Load		Description Y	x	H	x	W	=	Weight	Vo	Ho	Xo	Yo	M = Vo.Xo
		m		m		t/m3		ton	ton	ton	m	m	t.m
C1	= 0.5 x	2.40	x	0.30	x	1.80	=	0.648	0.648		0.600		0.389
C2	=	2.40	x	1.00	x	1.80	=	4.320	4.320		0.900		3.888
E1(wet)	=	1.85	x	3.36	x	1.80	=	11.172	11.172		0.900		10.055
E1(sat)	=	2.00	x	0.000	x	1.80	=	0.000	0.000		0.900		0.000
U1(up lif	=	(1.00)	x	0.00	x	1.80	=	0.000	0.000		0.900		0.000
Rp 4							=	(38.400)	(38.400)		1.175		(45.120)
Rp 3							=	(31.100)	(31.100)		0.625		(19.438)
		total					=		(53.360)				(50.226)

mqh-4

Section 6 – 6

H 3.1	=	0.300 m	W1	=	2.30 m
H 3.2	=	1.000 m	W2	=	2.30 m
H wet	=	5.300 m			
H sat	=	0.000 m			

Load		Description Y	x	H	x	W	=	Weight	Vo	Ho	Xo	Yo	M = Vo.Xo
		m		m		t/m3		ton	ton	ton	m	m	t.m
C 3.1	=	0.5 x 2.40	x	0.300	x	2.30	=	0.828	0.828		0.767		0.635
C 3.2	=	2.40	x	1.000	x	2.30	=	5.520	5.520		1.150		6.348
E1(wet)	=	1.85	x	5.300	x	2.30	=	22.551	22.551		1.150		25.934
E1(sat)	=	2.00	x	0.000	x	2.30	=	0.000	0.000		1.150		0.000
U1(up lif	=	1.00	x	0.000	x	2.30	=	0.000	0.000		1.150		0.000
Rp 1							=	(35.200)	(35.200)		1.675		(58.960)
Rp 2							=	(33.150)	(33.150)		0.625		(20.719)
		total					=		(39.451)				(46.762)

mqh-4

Project	: Medan Flood Control	Japan International Cooperation Agency (JICA)	Calculation sheet
Channel	: Medan Flood Way		Date
Structure	: Br – Mf 7		Nos of sheet
Station	: Fw 38 + 78		Prepared by

III.9 Resume forces on Abutment Section

Case – I,Normal Condition (HWL)

Case	Forces	Unit	Section 1	2	3	4	5	6
Case – I	Moment	t.m	0.775	0.492	4.546	58.782	47.149	22.765
		kg.cm	77,500	49,200	454,600	5,878,200	4,714,900	2,276,500
	Shear	ton	1.671	2.198	4.791	15.917	51.389	20.442
		kg	1,671	2,198	4,791	15,917	51,389	20,442
	Normal	ton	0.896	0.0	35.674	35.914	0.0	0.0
		kg	896	0.0	35,674	35,914	0.0	0.0

Case – II,Normal Condition (LWL)

Case	Forces	Unit	Section 1	2	3	4	5	6
Case – II	Moment	t.m	1.892	0.616	5.108	54.743	56.363	35.021
		kg.cm	189,200	61,600	510,800	5,474,300	5,636,300	3,502,100
	Shear	ton	2.984	2.877	5.124	17.025	60.68	31.771
		kg	2,984	2,877	5,124	17,025	60,680	31,771
	Normal	ton	1.400	0	41.242	41.482	0	0
		kg	1,400	0	41,242	41,482	0	0

Case – III,Earthquake Condition (HWL)

Case	Forces	Unit	Section 1	2	3	4	5	6
Case – III	Moment	t.m	0.946	0.549	5.012	44.572	41.146	36.878
		kg.cm	94,600	54,900	501,200	4,457,200	4,114,600	3,687,800
	Shear	ton	2.397	2.634	5.128	14.80	44.603	30.112
		kg	2,397	2,634	5,128	14,804	44,603	30,112
	Normal	ton	1.400	0	41.242	41.482	0	0
		kg	1,400	0	41,242	41,482	0	0

Case – IV,Earthquake Condition (LWL)

Case	Forces	Unit	Section 1	2	3	4	5	6
Case – IV	Moment	t.m	0.946	0.549	5.012	57.868	50.226	46.762
		kg.cm	94,600	54,900	501,200	5,786,800	5,022,600	4,676,200
	Shear	ton	2.397	2.634	5.128	17.233	53.36	39.451
		kg	2,397	2,634	5,128	17,233	53,360	39,451
	Normal	ton	1.40	0	41.242	41.482	0	0
		kg	1,400	0	41,242	41,482	0	0

mnh

Project : Medan Flood Control Channel : Medan Flood Way Structure : Br – Mf 7 Station : Fw 38 + 78	Japan International Cooperation Agency (JICA)	Calculation sheet Date Nos of sheet Prepared by

III.10 Reinforcing steel bar of Abutment section

Section – 4

Item	Describtion	unit	Normal condition Calcu–lation	Earth quake condition Calcu–lation
	Allowance stresses			
concrete compressive	fc = K – 225	kg/cm2	*75*	*75*
steel tensile	fs	kg/cm2	*1400*	*1400*
concrete shear	tou without r.bar	kg/cm2	*8*	*8*
	tou with r.bar	kg/cm2	*20*	*20*
transformend	n = Es/Ec		*21*	*21*
Moment	M	t.m	58.782	57.868
		kg.cm	5,878,200	5,786,800
Shear	S	ton	15.917	17.233
		kg	15917	17233
Normal	N	ton	35.914	41.482
		kg	35,914	41,482
dimension	b	cm	*100*	*100*
	ht	cm	*100*	*100*
	d'	cm	*10*	*10*
	h	cm	*90*	*90*
	b.h	cm2	*9,000*	*9,000*
Calculation for reinfor–cement bar with steel full working	eo1=M/N	cm	163.67	139.50
	eo2=1/30.ht,> 2 cm	cm	3.33	3.33
	used eo2	cm	2.00	2.00
	eo=eo1+eo2	cm	165.67	141.50
	eo/ht (see table)		1.66	1.42
	C		7.70	7.70
	lk	cm	375.5	375.5
	100.ht	cm	10,000	10,000
	lk/100.ht	cm	0.0376	0.0376
	(lk/100.ht) ^ 2	cm	*0.0014*	*0.0014*
	e1=C.[lk/(100.ht)] ^ 2.ht	cm	*1.086*	*1.086*
	e2=0.15.ht	cm	*15.00*	*15.00*
	e=eo+e1+e2	cm	*181.76*	*157.59*
	ea=e+1/2.ht–d'	cm	221.76	197.59
	M' = N.ea	kg.cm	7,964,290	8,196,311
	n.M'	kg.cm	167,250,088	172,122,533
	b.fs	kg/cm	140,000	140,000
	n.M'/(b.fs)		1,194.64	1,229.45
	@sqrt(n.M'/(b.fs))		34.56	35.06
	Ca=h /@sqrt(n.M'/b.fs) see PBI 1971 N.I–2		*2.604*	*2.567*
	n.fc		1,575	1,575
	øo = fs / (n.fc)		0.8889	0.8889
	delta		0.60	0.60
	from table fined Ca		2.783	2.554
	fine ø > øo		1.703	1.564
	ø'		2.333	2.103
	ksi(j)		0.370	0.390
	zeta		0.883	0.879
	100 nw		14.63	17.44
	nw		0.1463	0.1744
	w		0.00697	0.00830
	ea/h		2.48	2.20
	from table fined I		2.07	1.780
	i.A = wbh		62.70	74.74
	A	cm2	30.29	41.99
	A' =delta.	cm2	37.620	44.846

A – used bar dia. 25 mm @ 12.5 cm,
= 1.327
= 10
= 10 x 1.327
= 13.27 cm > 30.29 cm2

A' – used bar dia. 25 mm @ 12.5 cm,
Area @ bar = 4.900
nos of bar = 10
total area = 10 x 4.900
(cm2) = 49.00 cm2 > 37.62

	steel bar full warking		
	n.ø		35.78
tension of bar	fs	kg/cm2	1,400.00
compressive concrete	fc' = fs / (n.ø)	kg/cm2	39.15
tensile of bar	fs' = fs / ø'	kg/cm2	600.09
	7/8.b.h	cm2	7,875.00
shear concrete	Tca = S / (7/8.b.h)	kg/cm2	2.02

Section – 5

Item	Describtion	unit	Normal condition Calcu–lation	Earth quake condition Calcu–lation
	Allowance stresses			
concrete compressive	fc = K – 225	kg/cm2	*75*	*75*
steel tensile	fs	kg/cm2	*1400*	*1400*
concrete shear	tou without r.bar	kg/cm2	*8*	*8*
	tou with r.bar	kg/cm2	*20*	*20*
transformend	n = Es/Ec		*21*	*21*
Moment	M	t.m	56.363	50.226
		kg.cm	5,636,300	5,022,600
Shear	S	ton	60.68	53.36
		kg	65.366	53360
dimension	b	cm	*100*	*100*
	ht	cm	*1,300*	*1,300*
	d'	cm	*10*	*10*
	h	cm	*1,290*	*1,290*
	b.h	cm2	*129,000*	*129,000*
	M	kg.cm	5,636,300	5,022,600
	n.M	kg.cm	118,362,300	105,474,600
	b.fs	kg/cm	140,000	140,000
	n.M / (b.fs)		845.45	753.39
	@sqrt(n.M /(b.fs))		29.08	27.45
	Ca=h /@sqrt(n.M/b.fs) see PBI 1971 N.I–2		*44.366*	*46.998*
	n.fc		1,575	1,575
	øo = fs / (n.fc)		0.8889	0.8889
	delta		1.00	1.00
	from table fined Ca		12.290	12.290
Calculation for reinfor–cement bar with steel full working	fine ø > øo		8.091	8.091
	ø'		89.000	89.000
	ksi(j)		0.110	0.110
	zeta		0.963	0.963
	100 nw		0.688	0.688
	nw		0.00688	0.00688
	w		0.00033	0.00033
	A	cm2	42.26	42.26
	A' =delta.i.A	cm2	42.26	42.26

A – used bar dia. 25 mm @ 12.5 cm,
Area @ bar = 4.900
nos of bar = 10
total area = 10 x 4.9
(cm2) = 49.00 cm > 42.26 cm2

A' – used bar dia. 25 mm @ 12.5 cm,
Area @ bar = 4.900
nos of bar = 10
total area = 10 x 4.900
(cm2) = 49 cm2 > 42.26

	steel bar full warking		
	n.ø		169.91
tension of bar	fs	kg/cm2	1,400.00
compressive concrete	fc' = fs / (n.ø)	kg/cm2	8.24
tensile of bar	fs' = fs / ø'	kg/cm2	15.73
	7/8.b.h	cm2	112,875.00
shear concrete	Tca = S / (7/8.b.h)	kg/cm2	0.00

bar

4.1.12 SUBSTRUCTURE (BRIDGE SPAN 16.0M)

Case-5: Bridge Width = 7.0 m

PRESTRESSED CONCRETE BRIDGE COMPUTATION
CHANNEL PERCUT RIVER
Br – P 3
Station : Pe 115 + 06

span	
Left side	Right side
16.00	40.00

Width
7.0 m

II SUB STRUCTURE

A. Abutment

II.A.1 Neutral axis of Abutment

II.A.2 Earthquake coefficient

II.A.3 Axial forces on Abutment

II.A.4 Coulumb coefficient

II.A.5 Horizontal force

- II.A.5.1 Case – I,Normal condition (HWL)
- II.A.5.2 Case – II,Normal condition (LWL)
- II.A.5.3 Case – III,Earthquake condition (HWL)
- II.A.5.4 Case – IV,Earthquake condition (LWL)

II.A.6 Combined Load on Abutment

- II.A.6.1 Case – I,Normal condition (HWL)
- II.A.6.2 Case – II,Normal condition (LWL)
- II.A.6.3 Case – III,Earthquake condition (HWL)
- II.A.6.4 Case – IV,Earthquake condition (LWL)

B PIER

II.B.1 Neutral axis of Pier

II.B.2 Axial forces on Pier

II.B.3 Combined Load on Pier

- II.B.3.1 Case – I,Normal condition (HWL)
- II.B.3.2 Case – II,Normal condition (LWL)
- II.B.3.3 Case – III,Earthquake condition (HWL)
- II.B.3.4 Case – IV,Earthquake condition (LWL)

Project	: Medan Flood Control	Japan International Cooperation Agency (JICA)	Calculation sheet	
Channel	: Percut River		Date	
Structure	: Br. P-3		Nos of sheet	
Station	: PE 115 + 06 m		Prepared by	

II.SUBSTRUCTURE
A. ABUTMENT
II.A.1 Neutral axis of Left Side Abutment

span = 16.000 m

Top deck elevation	=	13.488	m					
Bottom footing elevation	=	7.488	m					
depth of abutment = Ht	=	6.00	m					
depth beam	=	0.90	m					
depth slab	=	0.245	m					
depth of beam to deck	=	1.145	m					
depth of beam and deck	=	0.9	+	0.245	=	1.145	m	
depth bearing pad					=	0.10	m	
depth back wall	=	1.145	+	0.1	=	1.245	m	
depth of footing	=	1.00	m					
depth of steam	=	6.00	−	1.245	−	1.00	=	3.755 m

H1	=	1.245	m	W1	=	0.300	m
H2	=	3.755	m	Wf1	=	1.600	m
H3	=	1.000	m	Wf2	=	1.000	m
Ht	=	6.000	m	Wf3	=	1.200	m
				W3	=	3.800	m
Depth of back fill	=	6.00	−	1.00	=	5.00	m
H4	=	0.500	m	W4	=	0.550	m
H5	=	0.250	m	W5	=	0.550	m
H6	=	0.500	m	W6	=	0.200	m
H7	=	0.250	m	W7	=	0.200	m
H8	=	0.300	m	W8	=	0.300	m
H9	=	0.300	m	W9	=	1.200	m

A1	W1	=	0.300	X1 =	W1/2	+	W2	+	Wf3				
					0.150	+	1.000	+	1.200		=	2.350	m
	H1	=	1.245	Y1 =	Ht	−	H1/2						
					6.000	−	0.623				=	5.377	m
A2	W2	=	1.200	X2 =	W2/2	+	Wf3						
					0.600	+	1.200				=	1.800	m
	H2	=	3.755	Y2 =	H2/2	+	H3						
					1.877	+	1.000				=	2.877	m
A3	W3	=	3.800	X3 =	W3/2								
					1.900						=	1.900	m
	H3	=	1.000	Y3 =	H3/2								
					0.500						=	0.500	m
A4	W4	=	0.550	X4 =	W4/2	+	W2	+	Wf3				
					0.275	+	1.200	+	1.200		=	2.675	m
	H4	=	0.500	Y4 =	H2	−	H4/2	+	H3				
					3.755	−	0.500	+	1.000		=	4.255	m
A5	W5	=	0.550	X5 =	W5/3	+	W2	+	Wf3				
					0.183	+	1.200	+	1.200		=	2.583	m
	H5	=	0.250	Y5 =	H2	−	H4	−	H5/3	+ H3			
					3.755	−	0.500	−	0.083	+ 1.000	=	4.172	m
A6	W6	=	0.200	X6 =	Wf3	−	W6/2						
					1.200	−	0.100				=	1.100	m
	H6	=	0.500	Y6 =	H2	−	H6/2	+	H3				
					3.755	−	0.250	+	0.083		=	3.588	m
A7	W7	=	0.200	X7 =	Wf3	−	W7/3						
					1.200	−	0.067				=	1.133	m
	H7	=	0.250	Y7 =	H2	−	H6	−	H7/3	+ H3			
					3.755	−	0.500	−	0.083	+ 1.000	=	4.172	m
A8	W8	=	1.600	X8 =	W8/3	+	W2	+	Wf3				
					0.533	+	1.000	+	1.200		=	2.733	m
	H8	=	0.300	Y8 =	H8/3	+	H3						

al-xy

A9	W9	=	1.200	X9 =	W9x2/3								
					0.800						=	0.800	m
	H9	=	0.300	Y9 =	H9/3	+	H3						
					0.100	+	ERR				=	ERR	m

Wing wall

Hgw	=	1.200	m	H back fill	=	5.00 m
Ww1	=	3.00	m	Hw1	=	3.00 m
Ww2	=	1.60	m	Hw2	=	1.00 m
Ww3	=	1.40	m	Hw3	=	1.00 m
Ww4	=	1.60	m	Hw4	=	0.70 m
Ww5	=	1.60	m	Hw5	=	0.30 m

Ww1	Ww1	=	3.000	Xw1 =	Ww1/2	+	W2	+	Wf3				
					1.500	+	1.000	+	1.200		=	3.700	m
	Hw1	=	3.000	Yw1 =	Ht	−	Hw1/2						
					6.000	−	1.500				=	4.500	m
Ww2	Ww2	=	1.600	Xw2 =	Ww2/2	+	W2	+	Wf3				
					0.800	+	1.000	+	1.200		=	3.000	m
	Hw2	=	1.000	Yw2 =	Ht	−	Hw1	−	Hw2/2				
					6.000	−	3.000	−	0.500		=	2.500	m
Ww3	Ww3	=	1.400	Xw3 =	W3	−	Ww3/2						
					3.800	−	0.700				=	3.100	m
	Hw3	=	1.000	Yw3 =	Ht	−	Hw1	−	Hw3/2				
					6.000	−	3.000	−	0.333		=	2.667	m
Ww4	Ww4	=	1.600	Xw4 =	Ww4/2	+	W2	+	Wf3				
					0.800	+	1.000	+	1.200		=	3.000	m
	Hw4	=	0.700	Yw4 =	Hw4/2	+	Hw5	+	H3				
					0.350	+	0.300	+	1.000		=	1.650	m
Ww5	Ww5	=	1.600	Xw5 =	W3	−	Ww5x2/3						
					3.800	−	1.067				=	2.733	m
	Hw5	=	0.300	Yw5 =	Hw5/3	+	H3						
					0.100	+	1.000				=	1.100	m

Approach slab

Apr	Wapr	=	3.000	Xapr =	Wapr/2	+	W2	+	Wf3				
					1.500	+	1.000	+	1.200		=	3.700	m
	Hapr	=	0.200	Yapr =	Ht	−	H1	+	Hapr/2				
					6.000	−	1.245	+	0.100		=	4.855	m

Guide wall

Gw	Wgw	=	3.000	Xgw =	Wgw/2	+	W2	+	Wf3				
					1.500	+	1.000	+	1.200		=	3.700	m
	Hgw	=	1.200	Ygw =	Ht	+	Hgw/2						
					6.000	+	0.600				=	6.600	m

Asphalt

Ha = 0.05 m

Asp	Wasp	=	3.000	Xasp =	W9/2	+	W2	+	Wf3				
					1.500	+	1.000	+	1.200		=	3.700	m
	Hasp	=	0.050	Yasp =	Ht	−	Hasp/2						
					6.000	−	0.025				=	5.975	m

Back fill

a. In case High Water Level

Hwl elvation	=	10.543	m			
Lwl elvation	=	6.843	m			
Free board	=	1.916	m			
Top foting elv.	=	7.488	+	1.000	=	8.488 m
Depth of wet soil						
H wet.l	=	13.488	−	10.543	=	2.945 m
Bearing elv	=	13.488	−	1.245	=	12.243 m
H wet.r	=	12.243	−	10.543	=	1.700 m
Depth of saturated soli						
Hstr	=	5.000	−	2.945	=	2.055 m

al-xy

a.1 soil wet condition

wet.l	Wwet.l	=	1.600	X1 =	Wwet.l/2	+	W2	+	W3			
					0.800	+	1.000	+	1.200	=	3.000	m
	Hwet.l	=	2.945	Y1 =	Ht	−	Hwet/2					
					6.000	−	1.473			=	4.527	m
wet.r	Wwet.r	=	1.200	X1 =	Wwet.r/2							
					0.600					=	0.600	m
	Hwet.r	=	1.700	Y1 =	Hwet.r/2	+	H3					
					0.850	+	1.00			=	1.850	m

a.2 soil saturated condition

sat.l	Wsat.l	=	1.600	X1 =	Wsat.l/2	+	W2	+	W3			
					0.800	+	1.000	+	1.200	=	3.000	m
	Hsat.l	=	2.055	Y1 =	Hsat.l/2	+	H3					
					1.027	+	1.000			=	2.027	m
sat.r	Wsat.r	=	1.200	X2 =	Wsat.r/2							
					0.600					=	0.600	m
	Hsat.r	=	2.055	Y2 =	Hsat.r/2	+	H3					
					1.027	+	1.000			=	2.027	m

b. In case Low Water Level

Depth of wet soil
H wet = 13.488 − 8.488 = 5.000 m
Depth of saturated soli
Hstr = 5.000 − 5.000 = 0.000 m

b.1. soil wet condition

Depth of back fill Rs = Hwc elv − Top foooting elv.
= 9.843 − 8.488
= 1.355 m

wet.l	Wwet.l	=	1.600	X1 =	Wwet.l/2	+	W2	+	W3			
					0.800	+	1.200	+	1.200	=	3.200	m
	Hwet.l	=	5.000	Y1 =	Hwet.l/2	+	H3					
					2.500	+	1.000			=	3.500	m
wet.r	Wwet.r	=	1.200	X2 =	Wwet.r/2							
					0.600					=	0.600	m
	Hwet.r	=	1.355	Y2 =	Hwet.r/2	+	H3					
					0.68	+	1.000			=	1.677	m

b.2 soil saturated condition

sat.l	W b3	=	no portion of abutment up of low water level
	H b3	=	

Project : Medan Flood Control Channel : Percur River Structure : Br – P 3 Station : Pe 115 + 06	Japan International Cooperation Agency (JICA)	Calculation sheet Date Nos of sheet Prepared by

II.A.2 Lateral earth pressure due to earthquake

Kh = C x I x S

Kh = coefficient of horizontal siesmic loading

C = the base shear coefficient,base on the data :
siesmic zone and soil condition
Siesmic zone = 4

soil condition soft soil C = 0.15

S = the structure type factor = 1

I = the importance factor

for bridge carrying more than 2.000 vehicle per day I = 1.2

C	I	S	kh
0.15	1.2	1	0.18

for all other permanent bridge I = 1

C	I	S	kh
0.15	1	1	0.15

for temporary bridge I = 0.8

C	I	S	kh
0.15	0.8	1	0.12

soil condition firm soil C = 0.10

for bridge carrying more than 2.000 vehicle per day

C	I	S	kh
0.1	1.2	1	0.12

for all other permanent bridge

C	I	S	kh
0.1	1.00	1	0.10

for temporary bridge

C	I	S	kh
0.1	0.8	1	0.08

source,Bridge Management System

EQ

Project : Medan Flood Control	Japan International Cooperation Agency (JICA)	Calculation sheet
Channel : Percur River		Date
Structure: Br – P 3		Nos of sheet
Station : Pe 115 + 06		Prepared by

II.4 Columb's coefficient

Right side Abutment

Normal condition

ø	=	30.00	deg.	ø – alpa	=	30.00	– 0.0	=	30.00	deg.
alpa	=	0.0	deg.	ø + delta	=	30.00	+ 30.00	=	60.00	deg.
Q	=	0.0	deg.	ø – beta	=	30.00	– 0.0	=	30.00	deg.
delta	=	30.00	deg.	alpa + delta	=	0.0	+ 30.00	=	30.00	deg.
beta	=	0.0	deg.	alpa – beta	=	0.0	– 0.000	=	0.00	deg.

$$Ka = \frac{\cos^2(\text{ø} - \text{alpa})}{\cos^2 \text{alpa}.\cos(\text{alpa} + \text{delta}).\left\{\left(1 + \sqrt{\frac{\sin(\text{ø} + \text{delta}).\sin(\text{Ø} - \text{beta})}{\cos(\text{alpa} + \text{delta}).\cos(\text{alpa} - \text{beta})}}\right)\right\}^2}$$

Cos(alpa)	=	1.000		sin(ø + delta)	=	0.866				
Cos^2 (alpa)	=	1.000		sin(ø – beta)	=	0.500				
Cos(ø – alpa)	=	0.866		cos(alpa + delta)	=	0.866				
Cos^2 (ø – alpa)	=	0.750		cos(alpa – beta)	=	1.000				

A = sin(ø+delta).sin(ø–beta)
= 0.866 x 0.500
= 0.433

B = cos (alpa + delta).cos(alpa–beta)
= 0.866 + 1.000
= 0.866

C = cos^2 (alpa).cos(alpa+delta) @sqrt(A/B) = 0.71
= 1.000 x 0.866
= 0.866

D = (1 + @sqrt(A/B)^2 C.D = 0.866 x 2.914
= (1.000 + 0.707)^2 = 2.524
= 2.914

$$Ka = \frac{\cos^2(\text{ø}-\text{alpa})}{\text{C.D}} = \frac{0.75}{2.52} = 0.297$$

Earth quake condition

$$Ke = \frac{\cos(\text{ø} - \text{alpa} - \text{Qo})^2}{\cos \text{Qo}.\cos^2 \text{alpa}.\cos(\text{alpa} + \text{delta}^{\wedge} + \text{Qo}).\left\{\left(1 + \sqrt{\frac{\sin(\text{ø} + \text{delta}).\sin(\text{Ø} - \text{beta} - \text{Qo})}{\cos(\text{alpa} + \text{delta} + \text{Qo}).\cos(\text{alpa} - \text{beta})}}\right)\right\}^2}$$

Qo = composite siesmic angle

k' = $\tan^{-1}\frac{Y}{Y-1} \times k$

k = siesmic coefficient in air
= 0.15

Y = 2.00

Y – 1 = 1.00

$$k' = \frac{Y}{Y-1} \times k$$
$$= \frac{2.00}{1.00} \times 0.15$$
$$= 0.30$$

Qo = @atan^–1.k
Qo = 8.5306

ø	=	30.00	deg.	ø – alpa–Qo	=	30.00	– 0.00	– 8.53	=	21.47
alpa	=	0.00	deg.	ø + delta	=	30.00	+ 15.00		=	45.00
Q	=	8.53	deg.	ø – beta–Qo	=	30.00	– 0.00	– 8.53	=	21.47
delta	=	15.00	deg.	ø – beta + Qo	=	30.00	– 0.00	+ 8.53	=	38.53
beta	=	0.00	deg.	alpa + delta+Qo	=	0.00	+ 15.00	+ 8.53	=	23.53
				alpa – beta	=	0.000	– 0.000		=	0.00

Cos(Qo)	=	0.989			
Cos(alpa)	=	1.000	sin(ø + delta)	=	0.707
Cos^2 (alpa)	=	1.000	sin(ø – beta – Qo)	=	0.366
Cos(ø – alpa – Qo)	=	0.931	cos(alpa + delta + Qo	=	0.917
Cos^2 (ø – alpa–Qo)^2	=	0.866	cos(alpa – beta)	=	1.000

A = sin(ø+delta).sin(ø–beta–Qo)
= 0.707 x 0.366
= 0.259

B = cos (alpa + delta+Qo).cos(alpa–beta)
= 0.917 + 1.000
= 0.917

C = cos Qo.Cos^2(alpa).cos(alpa+delta+Qo)
= 0.989 x 1.000 x 0.92
= 0.907

@sqrt(A/B) = 0.531

D = (1 + @sqrt(A/B)^2
= (1.000 + 0.531)^2
= 2.345

C.D = 0.907 x 2.345
= 2.126

$$Ke = \frac{\cos^2(\text{ø}-\text{alpa})}{\text{C.D}} = \frac{0.87}{2.126} = 0.407$$

Project : Medan Flood Contro	Japan International Cooperation Agency (JICA)	Calculation sheet	
Channel : Percut River		Date	
Structure : Br. P-3		Nos of sheet	
Station : Pe 115 + 06		Prepared by	

II.A.3 Axial load to Abutment

a. Superstucture

Vertical load/m'

Length of Abutment = 10.00 m
Depth of Abutment = 6.00 m
Width of footing = 5.10 m

Vertical load on abutment :

Description	Dead load	Line load	Uniform load	Pedestrian load	total ton
		L/s span = 16.00 m			
Total weight	203.09	27.27	99.20	9.60	339.2
Reaction to pier	101.55	13.64	49.60	4.80	169.6
Load per m width	10.15	1.36	4.96	0.48	16.96

Siesmic coefficie = 0.15

Horizontal load

Heq = 0.150 x Rdl
= 0.150 x 10.155
= 1.523 ton/m'

Acting point of siesmic load

Wf3 = 1.20 m
H3 = 1.00 m

X = 0.300 + WF2
= 0.300 + 1.20
= 1.500 m

Y = H2 + H3
= 3.755 + 1.00
= 4.76 m

b. Abutment section

Self weight

Section	width m	depth m	length m	nos	Yc t/m3	G / m'	Gv/m' m3	X m	Y m	G.X m3	G.Y m3
A1	0.30	1.595	1.00	1.00	2.40	1.148	1.148	2.350	5.377	2.699	2.699
A2	1.00	3.705	1.00	1.00	2.40	8.892	8.892	1.800	2.877	16.006	16.006
A3	3.80	1.00	1.00	1.00	2.40	9.120	9.120	1.900	0.500	17.328	17.328
A4	0.55	0.50	1.00	1.00	2.40	0.660	0.660	2.675	4.255	1.766	1.766
A5	0.55	0.25	1.00	1.00	2.40	0.165	0.165	2.583	4.172	0.426	0.426
A6	0.20	0.50	1.00	1.00	2.40	0.240	0.240	1.100	3.588	0.264	0.264
A7	0.20	0.50	1.00	1.00	2.40	0.120	0.120	1.133	4.172	0.136	0.136
A8	1.60	0.30	1.00	1.00	2.40	0.576	0.576	2.733	1.100	1.574	1.574
A9	1.20	0.30	1.00	1.00	2.40	0.432	0.432	0.800	1.100	0.346	0.346
					sum		21.35			40.54	40.54

abt-vh

Wing wall

Ww1	3.000	3.000	0.40	2.00	2.400	17.280	1.728	3.700	4.500	6.394	6.394
Ww2	1.600	1.000	0.40	2.00	2.400	3.072	0.307	3.350	2.500	1.029	0.768
Ww3	1.400	1.000	0.40	2.00	2.400	2.688	0.134	3.450	2.667	0.464	0.358
Ww4	1.600	0.700	0.40	2.00	2.400	2.150	0.215	3.350	1.650	0.720	0.355
Ww5	1.600	0.300	0.40	2.00	2.400	0.922	0.092	2.267	1.100	0.209	0.101
					sum		2.477			8.816	7.976

Miscellaneous load
Aproaach Road,Guide wall and Asphalt

Aps	3.00	0.20	1.00	1.00	2.400	1.44	1.440	3.700	6.600	5.328	9.504
Gw	3.00	1.20	0.40	2.00	2.000	5.76	0.576	3.700	4.855	2.131	2.796
asp	3.00	0.05	1.00	1.00	2.300	0.35	0.345	3.700	5.975	1.277	2.061
					sum		2.361			8.736	14.362
					total		26.19			58.10	62.88

axl-lod

Centre of gravity

X = Gv/m'.X / Gv/m' = 58.095 / 26.191 = 2.218 m

Y = Gv/m'.Y / Gv/m' = 62.882 / 26.191 = 2.401 m

H-abt = 0.150 x 26.191 = 3.929 ton

c. Back fill

a. Incase High Water level

Depth of back fill = 5.000 m
H wet.l = 1.700 m
H wet.r = 0.900 m
H saturated = 2.055 m

Section	width m	depth m	length m	nos	Yc t/m3	G / m'	Gv/m' m3	X m	Y m	G.X m3	G.Y m3
Wet.l	1.600	3.411	1.00	1.00	1.850	10.097	10.097	3.000	4.527	30.29	45.71
Wet.r	1.200	0.900	1.00	1.00	1.850	1.998	1.998	0.600	1.677	1.20	3.35
Sat.l	1.600	2.055	1.00	1.00	2.000	6.576	6.576	3.000	2.027	19.728	13.330
Sat.r	1.200	2.055	1.00	1.00	2.000	4.932	4.932	0.600	2.027	2.959	9.997
					sum		23.603			54.176	72.384

X = Gv/m'.X / Gv/m' = 54.176 / 23.603 = 2.295 m

Y = Gv/m'.Y / Gv/m' = 72.384 / 23.603 = 3.067 m

H-abt = 0.150 x 23.603 = 3.540 ton

b. Low water level

Depth of H wet = 5.000 m
Depth of H saturated = 0.00 m

a. Wet condition
Depth of back wall = 1.25 m

Section	width m	depth m	length m	nos	Yc t/m3	G / m'	Gv/m' m3	X m	Y m	G.X m3	G.Y m3
wet-1	1.600	5.000	1.00	1.00	1.850	14.800	14.800	3.200	3.500	47.360	51.800
wet-2	1.200	3.755	1.00	1.00	1.850	8.336	8.336	0.900	1.677	7.502	13.980
					sum		23.136			54.86	65.78

Centre of gravity

X = Gv/m'.X / Gv/m' = 54.862 / 23.136 = 2.371 m

Y = Gv/m'.Y / Gv/m' = 65.780 / 23.136 = 2.843 m

Horozontal force = Habt

Habt 0.150 x 23.136 = 3.470 ton

axl-lod

II.A.4 Columb's coefficient

Right side Abutment

Normal condition

ø	=	30.00	deg.	ø – alpa	=	30.00	–	0.0	= 30.00	deg.
alpa	=	0.0	deg.	ø + delta	=	30.00	+	30.00	= 60.00	deg.
Q	=	0.0	deg.	ø – beta	=	30.00	–	0.0	= 30.00	deg.
delta	=	30.00	deg.	alpa + delta	=	0.0	+	30.00	= 30.00	deg.
beta	=	0.0	deg.	alpa – beta	=	0.0	–	0.000	= 0.00	deg.

$$Ka = \frac{Cos^2(ø - alpa)}{Cos^2 alpa.cos(alpa + delta).\{(1 + @sqrt(\frac{sin(ø + delta).(sin(Ø - beta)}{cos (alpa + delta). cos (alpa - beta)}))\}^2}$$

Cos(alpa)	=	1.000	sin(ø + delta)	=	0.866
Cos ^ 2 (alpa)	=	1.000	sin(ø – beta)	=	0.500
Cos(ø – alpa)	=	0.866	cos(alpa + delta)	=	0.866
Cos ^ 2 (ø – alpa)	=	0.750	cos(alpa – beta)	=	1.000

A = sin(ø+delta).sin(ø–beta) = 0.866 x 0.500 = 0.433

B = cos (alpa + delta).cos(alpa–beta) = 0.866 + 1.000 = 0.866

C = cos ^ 2 (alpa).cos(alpa+delta) @sqrt(A/B) = 0.71

= 1.000 x 0.866 = 0.866

D = {1 + @sqrt(A/B) ^ 2 C.D = 0.866 x 2.914

= (1.000 + 0.707) ^ 2 = 2.524

= 2.914

$$Ka = \frac{Cos^2(ø-alpa)}{C.D} = \frac{0.75}{2.52} = 0.297$$

Earth quake condition

$$Ke = \frac{Cos(ø - alpa - Qo)^2}{Cos Qo.Cos^2 alpa.cos(alpa + delta^ + Qo).\{(1 + @sqrt(\frac{sin(ø + delta).(sin(Ø - beta - Qo)}{cos (alpa + delta + Qo). cos (alpa - beta)}))\}^2}$$

Qo = composite siesmic angle

$k' = tan^{-1}k = \frac{Y}{Y-1} \times k$

k = siesmic coefficient in air = 0.15

Y = 2.00

Y – 1 = 1.00

$k' = \frac{Y}{Y-1} \times k = \frac{2.00}{1.00} \times 0.15 = 0.30$

coulm

II.A.5 Horizontal force at Abutment

II.A.5.1 Normal Condition

Case – I, High Water Level

Depth of abutment	=	6.00	m			
Surcharge load	=	1.00	t/m2			
Unit weight wet soil	=	1.85	t/m3			
Unit weight saturated soil	=	2.00	t/m3			
Unit weight of water	=	1.00	t/m3			
Width of footing						
Wf1	=	1.60	m			
Wf2	=	1.00	m			
Wf3	=	1.20	m			
W3	=	3.80	m			
Elevation of HWL	=	10.543	m			
Elevation of LWL	=	6.843	m			
Top slab elevation	=	13.488	m			
Depth of footing	=	1.00	m			
Elv.of base footing	=	13.488	–	6.00	=	7.488 m
Elv.of top footing	=	7.488	+	1.00	=	8.488 m
Depth of back fill	=	13.488	–	8.488	=	5.000 m

Depth of wet soil = H wet

H wet = Top elv. – Hwl elv.

H wet = 13.488 – 10.543 = 2.945 m

Depth of saturated soil = H sat

H sat = 5.00 – 2.945 = 2.055 m

A Active earth pressure
By live load
Surcharge load = (q)

q	=	1.00 t/m2	Sin(alpha)		=	0.00	
delta	=	0.0	L	(length)	=	1.0	m
alpa	=	0.0	H	(depth)	=	6.0	m
Cos(alpha)	=	1.00	B	(width of footing)	=	3.8	m

oefficient of active pressure ,normal condition

Ka = 0.297

Pq = q x H x L x Ka

Pq = 1.00 x 5.00 x 1.00 x 0.297

Pq = 1.48 ton

Pqv = Hq x Sin(alpha)

= 1.48 x 0.00

= 0.00 ton

X = 3.80 m

Pqh = Hq x Cos(alpha)

= 1.48 x 1.00

= 1.48 ton

Y = 5.00 : 2.00

= 2.50 m

B By earth

B–1 Wet soil

Length = 1.00 m

Hwet = 2.945 m

Hsat = 2.055 m

hf–1

1. Load triangular

Pw	=	0.50	x	Ywet	x	Hwet^2	x	L	x	Ka
	=	0.50	x	1.85	x	8.67	x	1.00	x	0.297
	=	2.38 ton								

Pw(v)	=	Pw	x	Sin(alpha)	Pw(h)	=	Pw	x	Cos(alpha)
	=	2.38	x	0.00		=	2.38	x	1.00
	=	0.00 ton				=	2.38	ton	
X	=	3.80 m			Y	=	2.95	:	3.00 + 2.055
						=	3.04	m	

B-2 Saturated

H sat = 2.055 m

2. Load rectangular

Ps1	=	Ysat	x	H sat	x	L	x	Ka
	=	2.00	x	2.055	x	1.00	x	0.297
	=	1.22 ton						

Ps1(v)	=	H sat	x	Sin(alpha)	Ps1(h)	=	H sat	x	Cos(alpha)
	=	1.22		0.00		=	1.22	x	1.00
	=	0.00 ton				=	1.22	ton	
X	=	3.80 m			Y	=	2.055	:	2.00
						=	1.027	m	

3. Load triangular

Ps2	=	0.50	x	Ysat	x	H sat^2	x	L	x	Ka
	=	0.50	x	2.00	x	4.22	x	1.00	x	0.297
	=	1.25 ton								

Ps2(v)	=	H sat-:	x	Sin(alpha)	Ps2(h)	=	H sat-2	x	Cos(alpha)
	=	1.25	x	0.00		=	1.25	x	1.00
	=	0.00 ton				=	1.25	ton	
X	=	3.80 m			Y	=	2.05	:	3.00
						=	0.68	m	

4. Water

Hw = 2.055 m

Pw	=	0.50	x	Yw	x	Hw^2	x	L
	=	0.50	x	1.00	x	4.22	x	1.00
	=	2.11 ton						
X	=	3.80 m						
Y	=	2.055	:	3.00				
	=	0.68 m						

5. Uplife HWL

B = 3.80 m

Pu	=	Hw	x	B	x	Yw
	=	2.055	x	3.80	x	1.00
	=	7.81 ton/m'				
X	=	3.80	:	2.00		
	=	1.90 m				

Project : Medan Flood Control Channel : Pereut River Structur : Br. P-3 Station : Pe 115 + 06 m	Japan International Cooperation Agency (JICA)	Calculation sheet Date Nos of sheet Prepared by

II.A.5.2 Normal Condition
Case - II, Low Water Level

Depth of abutment	=	6.00 m				
Surcharge load	=	1.00 t/m2				
Unit weight wet soil	=	1.85 t/m3				
Unit weight saturated soil	=	2.00 t/m3				
Unit weight of water	=	1.00 t/m3				
Width of footing						
Wf1	=	1.60 m				
Wf2	=	1.00 m				
Wf3	=	1.20 m				
W3	=	3.80 m				
Elevation of HWL	=	10.543 m				
Elevation of LWL	=	6.843 m				
Top slab elevation	=	13.488 m				
Depth of footing	=	1.00 m				
Elv.of base footing	=	13.488	-	6.00	=	7.488 m
Elv.of top footing	=	7.488	+	1.00	=	8.488 m
Depth of back fill	=	13.488	-	8.488	=	5.000 m

Depth of wet soil = H wet

H wet	= Top elv.	-	Lwl elv.			
H wet	= 13.488	-	8.488	=	5.000	m
Depth of saturated soil	= H sat					
H sat	= 5.00	-	5.000	=	0.000	m

A Active earth pressure
By live load
Surcharge load = (q)

q	=	1.00 t/m2	Sin(alpha)	=	0.00		
delta	=	0.0	L (length)	=	1.0	m	
alpa	=	0.0	H (depth)	=	6.0	m	
Cos(alpha)	=	1.00	B (width of footing)	=	3.8	m	

oefficient of active pressure ,normal condition

Ka = 0.297

Pq	=	q	x	H	x	L	x	Ka	
Pq	=	1.00	x	5.00	x	1.00	x	0.297	
Pq	=	1.48 ton							
Pqv	=	Hq	x	Sin(alpha)					
	=	1.48	x	0.00					
	=	0.00 ton							
X	=	3.80 m							
Pqh	=	Hq	x	Cos(alpha)					
	=	1.48	x	1.00					
	=	1.48 ton							
Y	=	5.00	:	2.00					
	=	2.50 m							

B By earth

B-1 Wet soil

Length	=	1.00	m
Hwet	=	5.000	m
Hsat	=	0.000	m

1. Load triangular

Pw	=	0.50	x	Ywet	x	Hwet^2	x	L	x Ka
	=	0.50	x	1.85	x	25.00	x	1.00	x 0.297
	=	6.87 ton							

Pw(v)	=	Pw	x Sin(alpha)	Pw(h)	=	Pw	x Cos(alpha)	
	=	6.87	x 0.00		=	6.87	x 1.00	
	=	0.00 ton			=	6.87	ton	
X	=	3.80 m		Y	=	5.00	: 3.00 + 0.000	
					=	1.67	m	

B-2 Saturated

H sat = 0.000 m

2. Load rectangular

Ps1	=	Ysat	x	H sat	x	L	x Ka	
	=	2.00	x	0.000	x	1.00	x 0.297	
	=	0.00 ton						

Ps1(v)	=	H sat	x Sin(alpha)	Ps1(h)	=	H sat	x Cos(alpha)	
	=	0.00	0.00		=	0.00	x 1.00	
	=	0.00 ton			=	0.00	ton	
X	=	3.80 m		Y	=	0.000	: 2.00	
					=	0.000	m	

3. Load triangular

Ps2	=	0.50	x	Ysat	x	H sat^2	x	L	x Ka
	=	0.50	x	2.00	x	0.00	x	1.00	x 0.297
	=	0.00 ton							

Ps2(v)	=	H sat-2	x Sin(alpha)	Ps2(h)	=	H sat-2	x Cos(alpha)	
	=	0.00	x 0.00		=	0.00	x 1.00	
	=	0.00 ton			=	0.00	ton	
X	=	3.80 m		Y	=	0.00	: 3.00	
					=	0.00	m	

4. Water

Hw = 0.000 m

Pw	=	0.50	x	Yw	x	Hw^2	x	L
	=	0.50	x	1.00	x	0.00	x	1.00
	=	0.00 ton						
X	=	3.80 m						
Y	=	0.000	:	3.00				
	=	0.00 m						

5. Uplife HWL

B = 3.80 m

Pu	=	Hw	x	B	x Yw
	=	0.000	x	3.80	x 1.00
	=	0.00 ton/m'			
X	=	3.80	:	2.00	
	=	1.90 m			

Project	: Medan Flood Control	Japan International Cooperation Agency (JICA)	Calculation sheet
Channel	: Percut River		Date
Structure	: Br. P-3		Nos of sheet
Station	: PE 114 + 76 m		Prepared by

II.A.5.3 Earthquake Condition
Case - III, High Water Level

Depth of abutment	=	6.00 m			
Surcharge load	=	0.50 t/m2			
Unit weight wet soil	=	1.85 t/m3			
Unit weight saturated soil	=	2.00 t/m3			
Unit weight of water	=	1.00 t/m3			
Width of footing					
Wf1	=	1.60 m			
Wf2	=	1.00 m			
Wf3	=	1.20 m			
W3	=	3.80 m			
Elevation of HWL	=	10.543 m			
Elevation of LWL	=	6.843 m			
Top slab elevation	=	13.488 m			
Depth of footing	=	1.00 m			
Elv.of base footing	=	13.488 -	6.00	=	7.488 m
Elv.of top footing	=	7.488 +	1.00	=	8.488 m
Depth of back fill	=	13.488 -	8.488	=	5.000 m

Depth of wet soil = H wet

H wet = Top elv. - Hwl elv.

H wet = 13.488 - 10.543 = 2.945 m

Depth of saturated soil = H sat

H sat = 5.00 - 2.945 = 2.055 m

A Active earth pressure
By live load
Surcharge load = (q)

q	=	0.50 t/m2	Sin(alpha)	=	0.00		
delta	=	0.0	L (length)	=	1.0	m	
alpa	=	0.0	H (depth)	=	6.0	m	
Cos(alpha)	=	1.00	B (width of footing)	=	3.8	m	

oefficient of active pressure ,normal condition

Ke = 0.407

Pq	=	q	x	H	x	L	x Ke	
Pq	=	0.50	x	5.00	x	1.00	x	0.407
Pq	=	1.02 ton						

Pqv	=	Hq	x Sin(alpha)	
	=	1.02	x	0.00
	=	0.00 ton		
X	=	3.80 m		
Pqh	=	Hq	x Cos(alpha)	
	=	1.02	x	1.00
	=	1.02 ton		
Y	=	5.00	:	2.00
	=	2.50 m		

B By earth

B-1 Wet soil

Length = 1.00 m

Hwet = 2.945 m

Hsat = 2.055 m

1. Load triangular

Pw	=	0.50	x	Ywet	x	Hwet^2	x	L	x Ke
	=	0.50	x	1.85	x	8.67	x	1.00	x 0.407
	=	3.27 ton							

Pw(v)	=	Pw	x Sin(alpha)	Pw(h)	=	Pw	x Cos(alpha)	
	=	3.27	x 0.00		=	3.27	x 1.00	
	=	0.00 ton			=	3.27	ton	
X	=	3.80 m		Y	=	2.95	: 3.00 + 2.055	
					=	3.04	m	

B-2 Saturated

H sat = 2.055 m

2. Load rectangular

Ps1	=	Ysat	x	H sat	x	L	x Ke	
	=	2.00	x	2.055	x	1.00	x 0.407	
	=	1.67 ton						

Ps1(v)	=	H sat	x Sin(alpha)	Ps1(h)	=	H sat	x Cos(alpha)	
	=	1.67	0.00		=	1.67	x 1.00	
	=	0.00 ton			=	1.67	ton	
X	=	3.80 m		Y	=	2.055	: 2.00	
					=	1.027	m	

3. Load triangular

Ps2	=	0.50	x	Ysat	x	H sat^2	x	L	x Ke
	=	0.50	x	2.00	x	4.22	x	1.00	x 0.407
	=	1.72 ton							

Ps2(v)	=	H sat-:	x Sin(alpha)	Ps2(h)	=	H sat-2	x Cos(alpha)	
	=	1.72	x 0.00		=	1.72	x 1.00	
	=	0.00 ton			=	1.72	ton	
X	=	3.80 m		Y	=	2.05	: 3.00	
					=	0.68	m	

4. Water

Hw = 2.055 m

Pw	=	0.50	x	Yw	x	Hw^2	x	L
	=	0.50	x	1.00	x	4.22	x	1.00
	=	2.11 ton						
X	=	3.80 m						
Y	=	2.055	:	3.00				
	=	0.68 m						

5. Uplife HWL

B = 3.80 m

Pu	=	Hw	x	B	x Yw	
	=	2.055	x	3.80	x	1.00
	=	7.81 ton/m'				
X	=	3.80	:	2.00		
	=	1.90 m				

Project : Medan Flood Control	Japan International Cooperation Agency (JICA)	Calculation sheet
Channel : Percut River		Date
Structur : Br. P-3		Nos of sheet
Station : PE 114 + 76 m		Prepared by

II.A.5.4 Earthquake Condition
Case - IV, Low Water Level

Depth of abutment	=	6.00 m				
Surcharge load	=	0.50 t/m2				
Unit weight wet soil	=	1.85 t/m3				
Unit weight saturated soil	=	2.00 t/m3				
Unit weight of water	=	1.00 t/m3				
Width of footing						
Wf1	=	1.60 m				
Wf2	=	1.00 m				
Wf3	=	1.20 m				
W3	=	3.80 m				
Elevation of HWL	=	10.543 m				
Elevation of LWL	=	6.843 m				
Top slab elevation	=	13.488 m				
Depth of footing	=	1.00 m				
Elv.of base footing	=	13.488	-	6.00	=	7.488 m
Elv.of top footing	=	7.488	+	1.00	=	8.488 m
Depth of back fill	=	13.488	-	8.488	=	5.000 m

Depth of wet soil = H wet

H wet	=	Top elv.	-	Lwl elv.		
H wet	=	13.488	-	8.488	=	5.000 m
Depth of saturated soil	=	H sat				
H sat	=	5.00	-	5.000	=	0.000 m

A Active earth pressure
By live load
Surcharge load = (q)

q	=	0.50 t/m2	Sin(alpha)	=	0.00		
delta	=	0.0	L (length)	=	1.0	m	
alpa	=	0.0	H (depth)	=	6.0	m	
Cos(alpha)	=	1.00	B (width of footing)	=	3.8	m	

oefficient of active pressure ,normal condition

Ke = 0.407

Pq	=	q	x	H	x	L	x	Ke
Pq	=	0.50	x	5.00	x	1.00	x	0.407
Pq	=	1.02 ton						

Pqv	=	Hq	x Sin(alpha)	
	=	1.02	x 0.00	
	=	0.00 ton		
X	=	3.80 m		
Pqh	=	Hq	x Cos(alpha)	
	=	1.02	x 1.00	
	=	1.02 ton		
Y	=	5.00	: 2.00	
	=	2.50 m		

B By earth

B-1 Wet soil

Length	=	1.00 m
Hwet	=	5.000 m
Hsat	=	0.000 m

Project	: Medan Flood Control	Japan International Cooperation Agency (JICA)			Calculation sheet	
Channel	: Percut River				Date	
Structure	: Br. P-3				Nos of sheet	
Station	: PE 115 + 06 m				Prepared by	

II.A.6 Combined load
III.A.6.1 Normal condition
Case – I,High Water Level

span	=	16.00	m	
Length		L	= 10.00	m
Width of floting		W3	= 3.80	m
Thick of footing		H3	= 1.00	m

	Item	V load/m'	H load /m	Xo	Yo	V.Xo	H.Yo
Super structure	V-sp	10.150		1.500		15.225	
Abutment	V-abt	26.190		2.218		58.089	
Back fill	V-bf	23.929		2.401		57.454	
			Active earth pressure				
Surcharge load	Hq		1.480		2.500		3.700
Earth load triangle	Pw		2.380		3.040		7.235
Earth load rectangul	Ps1		1.220		1.027		1.253
Earth load triangle	Ps2		1.250		0.680		0.850
Water	Pw		(2.110)		0.680		(1.435)
Up life	Pu	(7.810)		1.900		(14.839)	
	Total	52.459	4.220			115.929	11.603

$$X' = \frac{Vo.Xo}{Vo\ tot} = \frac{115.929}{52.459} = 2.210\ m \qquad Y' = \frac{Ho.Yo}{Ho\ tot} = \frac{11.603}{4.220} = 2.750\ m$$

V	=	V/m'	x	L		
	=	52.46	x	10.00		
	=	524.59	ton			
H	=	H/m'	x	L		
	=	4.22	x	10.00		
	=	42.20	ton			
M	=	V.(X-(0.5.W))	–	H.(Y-tb)		
		0.5 x W	=	0.50	x	3.80
			=	1.90	m	
		(X-(0.5xW))	=	2.21	–	1.90
			=	0.31	m	
		(Y – tb)	=	2.750	–	1.00
			=	1.75	m	
		H x (Y – tb)	=	42.20	x	1.75
			=	73.83	t.m	
	=	V x (X-(0.5 x V	–	(H x (Y-tb))		
	=	524.59	x	0.31	–	73.83
	=	162.57	–	73.83		
	=	88.74	t.m			

cld-an

1. Load triangular

Pw	=	0.50	x	Ywet	x	Hwet^2	x	L	x Kc
	=	0.50	x	1.85	x	25.00	x	1.00	x 0.407
	=	9.41 ton							

Pw(v)	=	Pw	x Sin(alpha)	Pw(h)	=	Pw	x Cos(alpha)
	=	9.41	x 0.00		=	9.41	x 1.00
	=	0.00 ton			=	9.41	ton
X	=	3.80 m		Y	=	5.00	: 3.00 + 0.000
					=	1.67	m

B-2 Saturated

H sat = 0.000 m

2. Load rectangular

Ps1	=	Ysat	x H sat	x	L	x Kc	
	=	2.00	x 0.000	x	1.00	x 0.407	
	=	0.00 ton					

Ps1(v)	=	H sat	x Sin(alpha)	Ps1(h)	=	H sat	x Cos(alpha)
	=	0.00	0.00		=	0.00	x 1.00
	=	0.00 ton			=	0.00	ton
X	=	3.80 m		Y	=	0.000	: 2.00
					=	0.000	m

3. Load triangular

Ps2	=	0.50	x	Ysat	x	H sat^2	x	L	x Kc
	=	0.50	x	2.00	x	0.00	x	1.00	x 0.407
	=	0.00 ton							

Ps2(v)	=	H sat-2	x Sin(alpha)	Ps2(h)	=	H sat-2	x Cos(alpha)
	=	0.00	x 0.00		=	0.00	x 1.00
	=	0.00 ton			=	0.00	ton
X	=	3.80 m		Y	=	0.00	: 3.00
					=	0.00	m

4. Water

Hw = 0.000 m

Pw	=	0.50	x	Yw	x	Hw^2	x	L
	=	0.50	x	1.00	x	0.00	x	1.00
	=	0.00 ton						
X	=	3.80 m						
Y	=	0.000	:	3.00				
	=	0.00 m						

5. Uplife HWL

B = 3.80 m

Pu	=	Hw	x B	x Yw		
	=	0.000	x 3.80	x	1.00	
	=	0.00 ton/m'				
X	=	3.80	: 2.00			
	=	1.90 m				

fh-4

III.A.6.2 Normal condition
Case – II,Low Water Level

	Item	Vo/m'	Ho/m'	Xo	Yo	Vo.Xo	Ho.Yo
Super structure	V–sp	10.150		1.500		15.225	
Abutment	V–Abt	26.190		2.218		58.089	
Back fill	V–bf	23.136		2.371		54.855	
			Active earth pressure				
Surcharge load	Hq		1.480		2.500		3.700
Earth load triangle	Pw		6.870		1.670		11.473
Earth load rectangula	Ps1						
Earth load triangle	Ps2						
Water	Pw						
	Pu						
Up life	Pu1						
	Pu2						
	Total	59.476	8.350			128.170	15.173

$$X' = \frac{Vo.Xo}{Vo\ tot} = \frac{128.170}{59.476} = 2.155\ m \qquad Y' = \frac{Ho.Yo}{Ho\ tot} = \frac{15.173}{8.350} = 1.817\ m$$

V = V/m' x L
= 59.48 x 10.00
= 594.76 ton

H = H/m' x L
= 8.35 x 10.00
= 83.50 ton

M = V x (X–(0.5 x V – (H x (Y–tb))

0.5 x W = 0.500 x 3.80
= 1.90 m

(X –(0.5xW)) = 2.155 – 1.90
= 0.25 m

(Y – tb) = 1.817 – 1.00
= 0.82 m

H x (Y – tb) = 83.50 x 0.82
= 68.23 m

= V x (X–(0.5 x V – (H x (Y–tb))
= 594.76 x 0.25 – 68.23
= 151.65 – 68.23
= 83.43 t.m

cld–an

Project : Medan Flood Control Channel : Percut River Structure : Br. P–3 Station : Pe 115 + 06 m	Japan International Cooperation Agency (JICA)	Calculation sheet Date Nos of sheet Prepared by

II.A.6.3 Earthquake condition
Case – III,High Water Level

span = 16.00 m
Length L = 10.00 m
Width of ffoting W3 = 3.80 m
Thick of footing H3 = 1.00 m

	Item	V load/m'	H load /m	Xo	Yo	V.Xo	H.Yo
Super structure	V–sp	10.150	1.523	1.500	4.760	15.225	7.249
Abutment	V–abt	26.190	3.929	2.218	2.401	58.089	9.434
Back fill	V–bf	23.929	3.540	2.401	3.067	57.454	10.857
				Active earth pressure			
Surcharge load	Hq		1.480		2.500		3.700
Earth load triangle	Pw		2.380		3.040		7.235
Earth load rectangula	Ps1		1.220		1.027		1.253
Earth load triangle	Ps2		1.250		0.680		0.850
Water	Pw		(2.110)		0.680		(1.435)
Up life	Pu	(7.810)		1.900		(14.839)	
	Total	52.459	13.212			115.929	39.144

$$X' = \frac{Vo.Xo}{Vo\ tot} = \frac{115.929}{52.459} = 2.210\ m \qquad Y' = \frac{Ho.Yo}{Ho\ tot} = \frac{39.144}{13.212} = 2.963\ m$$

V = V/m' x L
= 52.46 x 10.00
= 524.59 ton

H = H/m' x L
= 13.21 x 10.00
= 132.12 ton

M = V.(X–(0.5.W)) – H.(Y–tb)

0.5 x W = 0.50 x 3.80
= 1.90 m

(X –(0.5xW)) = 2.21 – 1.90
= 0.31 m

(Y – tb) = 2.963 – 1.00
= 1.96 m

H x (Y – tb) = 132.12 x 1.96
= 259.32 t.m

= V x (X–(0.5 x W)) – (H x (Y–tb))
= 524.59 x 0.31 – 259.32
= 162.57 – 259.32
= (96.75) t.m

cld–aq

II.A.6.4 Earthquake condition
Case – IV,Low Water Level

	Item	Vo/m'	Ho/m'	Xo	Yo	Vo.Xo	Ho.Yo
Super structure	V–sp	10.150	1.523	1.500	4.760	15.225	7.249
Abutment	V–Abt	26.190	3.929	2.218	2.401	58.089	9.434
Back fill	V–bf	23.136	3.470	2.371	2.843	54.855	9.865
				Active earth pressure			
Surcharge load	Hq		1.480		2.500		3.700
Earth load triangle	Pw		6.870		1.670		11.473
Earth load rectangula	Ps1						
Earth load triangle	Ps2						
Water	Pw						
	Pu						
Up life	Pu1						
	Pu2						
	Total	59.476	17.272			128.170	41.721

$$X' = \frac{Vo.Xo}{Vo\ tot} = \frac{128.170}{59.476} = 2.155\ m \qquad Y' = \frac{Ho.Yo}{Ho\ tot} = \frac{41.721}{17.272} = 2.416\ m$$

V	=	V/m'	x	L
	=	59.48	x	10.00
	=	594.76	ton	
H	=	H/m'	x	L
	=	17.27	x	10.00
	=	172.72	ton	

M = V x (X–(0.5 x W)) – (H x (Y–tb))

0.5 x W	=	0.500	x	3.80
	=	1.90	m	
(X –(0.5xW))	=	2.155	–	1.90
	=	0.25	m	
(Y – tb)	=	2.416	–	1.00
	=	1.42	m	
H x (Y – tb)	=	172.72	x	1.42
	=	244.49	m	

= V x (X–(0.5 x W)) – (H x (Y–tb))
= 594.76 x 0.25 – 244.49
= 151.65 – 244.49
= (92.84) t.m

cld–aq

(7)	W7	=	0.400	X7 =	W5/2	–	W7/3					
					2.550	–	0.133				=	2.417 m
	H7	=	0.500	Y7=	Y6							
					5.033						=	5.033 m
(8)	W8	=	0.200	X8 =	W5/2	+	W4	+	W8/3			
					2.550	+	1.000	+	0.067		=	3.617 m
	H8	=	3.900	Y8=	H8/3	+	Hf					
					1.300	+	1.300				=	2.600 m
(9)	W9	=	0.200	X9 =	W5/2	–	W4	–	W9/3			
					2.550	–	1.000	–	0.067		=	1.483 m
	H9	=	3.900	Y9=	Y8							
					2.600						=	2.600 m
(10)	W10	=	1.850	X10=	W5/2	+	W4/2	+	W8	+ W10/3		
					2.550	+	0.500	+	0.200	+ 0.617	=	3.867 m
	H10	=	0.300	Y10=	H10/3	+	H5					
					0.100	+	1.000				=	1.100 m
(11)	W11	=	1.850	X11=	W11x2/3							
					1.233						=	1.233 m
	H11	=	0.300	Y11=	Y10							
					1.100						=	1.100 m
(12)	W12	=	1.400	X12 =	W12/2	+	Wf3					
					0.700	+	0.200				=	0.900 m
	H12	=	0.300	Y12=	H12/2	+	H5					
					0.150	+	1.000				=	1.150 m

Back fill

a. In case HWL

High water level elv	=	10.543 m				
High water channnel elv	=	9.843 m				
Elevation of top pier	=	13.488	–	1.245	=	12.243 m
Base footing elevation	=	12.243	–	7.000	=	5.243 m
Top footing elevation	=	5.243	+	1.300	=	6.543 m
Depth of earth filling	=	Hwc elv	–	Top footing elv.		
	=	9.843	–	6.543	=	3.300 m
Depth of wet soil	=	H wet				
H wet	=	Hwc elv	–	Hwl elv		
	=	9.843	–	9.843	=	0.000 m
				say	=	0.000 m
Depth of saturated soil						
Hstr	=	Hwc elv	–	Top footing elv.		
	=	9.843	–	6.543	=	3.300 m

a.1 wet soil condition,-------nothing

a.2 soil saturated condition

sat.l	Wsat.l	=	1.850	X1=	W5/2	+	W4	+	Wsat.l/2			
					2.550	+	1.000	+	0.925		=	4.475 m
	Hsat.l	=	3.300	Y1=	Hsat.l/2	+	Hf					
					1.650	+	1.300				=	2.950 m
sat.r	Wsat.r	=	1.850	X2=	W5/2							
					0.925						=	0.925 m
	Hsat.r	=	3.300	Y2=	Y1							
					2.950						=	2.950 m

x–y

b. In case LWL

Low water channal elv = 0.200 m
High water channal elv = 10.543 m
Depth of earth filling = Hwc elv − Top footing elv.
= 9.843 − 6.543 = 3.300 m

Depth of wet soil = Hwet
H wet = Hwc elv − Top footing elv.
= 9.843 − 6.543 = 3.300 m

no.soil portion of saturated condition Lwl < top of footing
Depth of saturated soil = Hsat.
Hsat. = Lwl elv − Top footing elv.
= 6.543 − 6.543 = 0.000 m
say = 0.000 m

b.1 soil wet condition

wet−1	Wwet1	=	1.850	X1 =	W5/2	+	W4	+	Wsat1/2		
					2.550	+	1.000	+	0.925	=	4.475 m
	Hwet1	=	3.300	Y1 =	Hwet1	+	Hf				
					1.650	+	1.300			=	2.950 m
wet−2	Wwet2	=	1.850	X2 =	W5/2						
					0.925					=	0.925 m
	Hwet2	=	3.300	Y2 =	Y1						
					2.950					=	2.950 m

b.2 soil saturated condition,−−−−−−−− nothing

sat−1	W sat1	=	0.000	X1 =	W sat1/2	+	W4	+	Wf2		
					0.000	+	1.000	+	0.925	=	0.000 m
	H sat1	=	0.000	Y1 =	H sat1/2	+	H5				
					0.000	+	1.300			=	0.000 m
sat−2	W sat2	=	0.000	X2 =	W sat2/2						
					0.000					=	0.000 m
	H sat2	=	0.000	Y2 =	H sat2/2	+	H5				
					0.000	+	1.300			=	0.000 m

x−y

Project : Medan Flood Control	Japan International Cooperation Agency (JICA)	Calculation sheet
Channel : Percut River		Date
Structure : Br. P−3		Nos of sheet
Station : Pe 115 + 06		Prepared by

B PIER

II.B.1. Neutral axis of Pier

span = 16.00 m	span = 40.00 m
depth slab = 0.245 m	depth slab = 0.245 m
depth beam = 0.900 m	depth beam = 1.700 m
= 1.145 m	1.945 m
thick of bearing = 0.100 m	thick of bearing = 0.100 m
depth of back wall = 1.245 m	depth of back wall 2.045 m

Slab deck elv. = 13.488 m
Hwl elv = 10.543 m Hwc elv. = 9.843

Ht	=	7.000 m	Hf	=	1.300 m			
H1	=	0.250 m	W1	=	0.400 m	Wf1	=	1.850 m
H2	=	1.800 m	W2	=	1.000 m	Wf2	=	1.400 m
H3	=	1.000 m	W3	=	0.800 m	Wf3	=	1.850 m
H4	=	3.900 m	W4	=	1.000 m	W5	=	5.100 m
H5	=	1.000 m	W5	=	5.100 m			
H6	=	0.500 m	W6	=	0.400 m			
H7	=	0.500 m	W7	=	0.400 m			
H8	=	3.900 m	W8	=	0.200 m			
H9	=	3.900 m	W9	=	0.200 m			
H10	=	0.300 m	W10	=	1.850 m			
H11	=	0.300 m	W11	=	1.850 m			
H12	=	0.300 m	W12	=	1.400 m			

(1)	W1	=	0.400	X1 =	W5/2	−	W1/2					
					2.550	−	0.200				=	2.350 m
	H1	=	0.250	Y1 =	Ht	+	H1/2					
					7.000	+	0.125				=	7.125 m
(2)	W2	=	1.000	X2 =	W5/2	+	W2/2					
					2.550	+	0.500				=	3.050 m
	H2	=	1.800	Y2 =	H2/2	+	H4	+	Hf			
					0.900	+	3.900	+	1.300		=	6.100 m
(3)	W3	=	0.800	X3 =	W5/2	−	W3/2					
					2.550	−	0.400				=	2.150 m
	H3	=	1.000	Y3 =	H4	+	H3/2	+	Hf			
					3.900	+	0.500	+	1.300		=	5.700 m
(4)	W4	=	1.000	X4 =	W5/2	−	W4/2					
					2.550	−	0.500				=	2.050 m
	H4	=	3.900	Y4 =	H4/2	+	Hf					
					1.950	+	1.300				=	3.250 m
(5)	W5	=	5.100	X5 =	W5/2							
					2.550						=	2.550 m
	H5	=	1.000	Y5 =	H5/2							
					0.500						=	0.500 m
(6)	W6	=	0.400	X6 =	W5/2	+	W4/2	+	W6/3			
					2.550	+	0.500	+	0.133		=	3.183 m
	H6	=	0.500	Y6 =	H4	+	Hf	−	H6/3			
					3.900	+	1.300	−	0.167		=	5.033 m

x−y

Project : Medan Flood Control Channel : Percut River Structure : Br. P-3 Station : Pe 115 + 06	Japan International Cooperation Agency (JICA)	Calculation sheet Date Nos of sheet Prepared by	

II.B.2 Axial load to Pier

a. Superstucture

Vertical load/m'
Length of pier = 10.00 m
Width of footing = 5.10 m

Vertical load on Pier

Description	Dead load	Line load	Uniform load	Pedestrian load	total ton
	total load				
	L/s span = 25.00 m				
Total weight	203.09	27.27	99.20	9.60	339.2
Reaction to pier	101.55	13.64	49.60	4.80	169.6
Load per m width	10.15	1.36	4.96	0.48	16.96
	R/s spaR/s span = 31.00 m				
Total weight	600.51	27.27	247.79	24.00	1,099.6
Reaction to pier	400.26	13.64	123.90	12.00	549.8
Load per m width	40.03	1.36	12.39	1.20	54.98
Total load to pier	50.18	2.73	17.35	1.68	71.94

Left side span

Acting point of siesmic load
Siesmic coefficl = 0.15

Horizontal load
Heq = 0.150 x Rdl
= 0.150 x 10.155
= 1.523 ton/m'

W1 = 0.400 m H2 = 1.800 m
Wf3 = 1.850 m H4 = 3.900 m
Hf = 1.300 m

X = 0.300 + W1/2 + W5/2
= 0.300 + 0.200 + 2.550
= 3.050 m

Y = H2 + H4 + Hf
= 1.800 + 3.900 + 1.300
= 7.000 m

Right side span

Horizontal load
Heq = 0.150 x Rdl
= 0.150 x 40.026
= 6.004 ton/m'

W1 = 0.400 m H3 = 1.000 m
W5 = 5.100 m H4 = 3.900 m
W3 = 0.800 m Hf = 1.300 m

axl-pi

X = W5/2 - W3/2
= 2.550 - 0.400
= 2.150 m

Y = H3 + H4 + Hf
= 1.000 + 3.900 + 1.300
= 6.200 m

Self weight

Sec-tion	width m	depth m	length m	nos	Yc t/m3	G / m'	Gv/m' m3	X m	Y m	G.X m3	G.Y m3
A1	0.40	0.250	10.00	1.00	2.40	2.400	2.400	2.350	7.125	5.640	17.10
A2	1.00	1.800	10.00	1.00	2.40	43.200	43.200	3.050	6.100	131.760	263.52
A3	0.80	1.00	10.00	1.00	2.40	19.200	19.200	2.150	5.700	41.280	109.44
A4	1.00	3.900	7.00	1.00	2.40	65.520	65.520	2.050	3.250	134.316	212.94
A5	5.10	1.00	10.00	1.00	2.40	122.40	122.40	2.550	0.500	312.120	61.20
A6	0.50	0.50	7.00	1.00	2.40	2.100	2.100	3.183	5.033	6.684	10.57
A7	0.50	0.50	7.00	1.00	2.40	2.100	2.100	2.417	5.033	5.076	10.57
A8	0.20	3.90	7.00	1.00	2.40	6.552	6.552	3.617	2.600	23.699	17.04
A9	0.20	3.90	7.00	1.00	2.40	6.552	6.552	1.483	2.600	9.717	17.04
A10	1.85	0.30	10.00	1.00	2.40	6.660	6.660	3.367	1.100	22.424	7.33
A11	1.85	0.30	10.00	1.00	2.40	6.660	6.660	1.233	1.100	8.212	7.33
A12	1.40	0.30	10.00	1.00	2.40	10.080	10.080	0.900	1.150	9.072	11.59
					sum		293.42			710.00	745.65
Total load per meter							29.342			71.00	74.57

H-pier = 29.342 x 0.150 = 4.401 ton

X = Gv/m'.X / Gv/m' = 71.000 / 29.342 = 2.420 m

Y = Gv/m'.Y / Gv/m' = 74.565 / 29.342 = 2.541 m

Backfill
a. In case : High water level

H wet = 0.000 m
H sat = 3.800 m
Wf1 = 1.850 m
Wf2 = 1.850 m

Sec-tion	width m	depth m	length m	nos	Yc t/m3	G / m'	Gv/m' m3	X m	Y m	G.X m3	G.Y m3
wet.l	1.850	0.000	1.00	1.00	1.850	0.000	0.000	0.000	0.000	0.00	0.00
wet.r	1.850	0.000	1.00	1.00	1.850	0.000	0.000	0.000	0.000	0.00	0.00
sat.l	1.850	3.800	1.00	1.00	2.000	14.060	14.060	4.475	2.950	62.918	41.48
sat.r	1.850	3.800	1.00	1.00	2.000	14.060	14.060	0.925	2.950	13.006	41.48
					sum		28.120			75.924	82.954

H-fillin = 28.120 x 0.150 = 4.218 ton

axl-pi

X =	Gv/m'.X / Gv/m'	Y =	Gv/m'.Y / Gv/m'
=	75.924 / 28.120 = 2.700 m	=	82.954 / 28.120 = 2.950 m

b. Low water level

H wet	=	3.800	m
H sat	=	0.000	m
Wf1	=	1.850	m
Wf2	=	1.850	m

Section	width m	depth m	length m	nos	Yc t/m3	G / m'	Gv/m' m3	X m	Y m	G.X m3	
wet.l	1.850	3.800	1.00	1.00	1.850	13.006	13.006	4.475	2.950	58.200	38.37
wet.r	1.850	3.800	1.00	1.00	1.850	13.006	13.006	0.925	2.950	12.030	38.37
sat.l	1.850	0.000	1.00	1.00	2.000	0.000	0.000	0.000	0.000	0.000	0.00
sat.r	1.850	0.000	1.00	1.00	2.000	0.000	0.000	0.000	0.000	0.000	0.00
					sum		26.011			70.230	76.732

H-fillin = 26.011 x 0.150 = 3.902 ton

Centre of gravity

X =	Gv/m'.X / Gv/m'	Y =	Gv/m'.Y / Gv/m'
=	70.230 / 26.011 = 2.700 m	=	76.732 / 26.011 = 2.950 m
=	2.700 m	=	2.950 m

axl-pi

Project	: Medan Flood Control	Japan International Cooperation Agency (JICA)	Calculation sheet
Channel	: Percut River		Date
Structure	: Br. P-3		Nos of sheet
Station	: Pe 115 + 06		Prepared by

III.B.3 Combined load on Pier
III.B.3.1 Normal condition
Case - I,High Water Level

Width	L	=	10.00	m
Width of footing	W5	=	5.10	m
Thick of footing	Hf	=	1.30	m
	Wf1	=	1.85	m
	UP lift			
	H sat	=	3.300	m
	P up	=	5.10 x 3.30 x 1.00	
		=	16.830	ton

total load

Description	Dead load	Line load	Uniform load	Pedestrian load	total ton
		L/s span =	31.00		
Total weight	203.09	27.27	99.20	9.60	339.16
Reaction to pier	101.55	13.64	49.60	4.80	169.58
Load per m width	10.15	1.36	4.96	0.48	16.96
		R/s span =	40.00		
Total weight	800.51	27.27	247.79	24.00	1,099.57
Reaction to pier	400.26	13.64	123.90	12.00	549.79
Load per m width	40.03	1.36	12.39	1.20	54.98
Total load to pier	50.18	2.73	17.35	1.68	71.94

Breking forces	=	5 % x " D " load (SNI No.1725-1989-F).Dep.PU					
Left side span	=	0.05	x	6.32	=	0.316	ton
Right side span	=	0.05	x	13.75	=	0.688	ton

	Item	V load/m'	H load /m'	Xo	Yo	V.Xo	H.Yo
Super structure							
Left side	V-sp	16.958		3.050		51.722	
Right side	V-sp	54.979		2.150		118.204	
Pier	V-pier	29.342		2.420		71.008	
Breking forces L/s			0.316		7.000		2.213
Breking forces R/s			0.688		6.200		4.263
Back fill	V-bf	28.120		2.700		75.924	
				Active earth pressure			
Up life	Pu1	(16.830)		2.550		(42.916)	
	Total	112.569	1.004			273.941	6.477

X' =	Vo.Xo / Vo tot	Y' =	Ho.Yo / Ho tot
=	273.941 / 112.569	=	6.477 / 1.004
=	2.434 m	=	6.452 m

cld-n

V	=	V/m'	x	L		
	=	112.57	x	10.00		
	=	1,125.69	ton			
H	=	H/m'	x	L		
	=	1.00	x	10.00		
	=	10.04	ton			
M	=	V.(X−(0.5.W	−	H.(Y−tb)		
		0.5 x W	=	0.50	x	5.10
			=	2.55	m	
		(X −(0.5xW)	=	2.43	−	2.55
			=	(0.12)	m	
		(Y − tb)	=	6.452	−	1.30
			=	5.15	m	
		H x (Y − tb)	=	10.04	x	5.15
			=	51.72	t.m	
	=	V x (X−(0.5	−	(H x (Y−tb))		
	=	1,125.69	x	(0.12)	−	51.72
	=	(131.09)	−	51.72		
	=	(182.81)	t.m			

III.B.3.2 Normal condition
Case – II,Low Water Level

UP lift

Wf1	=	1.85	m		
H sat	=	0.000	m		
P up	=	1.85	x	0.00 x	1.00
	=	0.00	ton		

	Item	V load/m'	H load /m'	Xo	Yo	V.Xo	H.Yo
Super structure							
Left side	V−sp	16.958		3.050		51.722	
Right side	V−sp	54.979		2.150		118.204	
Pier	V−pier	29.342		2.420		71.008	
Breking forces L/s			0.316		7.000		2.213
Breking forces R/s			0.688		6.200		4.263
Back fill	V−bf	26.011		2.700		70.230	
			Active earth pressure				
Up life	Pu1	0.000		0.000	0.000	0.000	
	Total	127.290	1.004		324.363	317.640	6.477

X'	=	Vo.Xo / Vo tot			Y'	=	Ho.Yo / Ho tot
	=	324.363 / 127.290				=	6.477 / 1.004
	=	2.548	m			=	6.452 m
V	=	V/m'	x	L			
	=	127.29	x	10.00			
	=	1,272.90	ton				
H	=	H/m'	x	L			
	=	1.00	x	10.00			
	=	10.04	ton				

M	=	V.(X−(0.5.W	−	H.(Y−tb)		
		0.5 x W	=	0.50	x	5.10
			=	2.55	m	
		(X −(0.5xW)	=	2.55	−	2.55
			=	(0.00)	m	
		(Y − tb)	=	6.452	−	1.30
			=	5.15	m	
		H x (Y − tb)	=	10.04	x	5.15
			=	51.72	t.m	
	=	V x (X−(0.5	−	(H x (Y−tb))		
	=	1,272.90	x	(0.00)	−	51.72
	=	(2.25)	−	51.72		
	=	(53.97)	t.m			

Project	: Medan Flood Control	Japan International Cooperation Agency (JICA)	Calculation sheet	
Channel	: Percut River		Date	
Structure	: Br. P-3		Nos of sheet	
Station	: Pe 115 + 06		Prepared by	

III.B.3.3 Earthquake condition
Case – III,High Water Level

Width	L	=	10.00	m		
Width of footing	W5	=	5.10	m		
Thick of footing	Hf	=	1.30	m		
	Wf1	=	1.85	m		
	UP lift					
	H sat	=	3.300	m		
	P up	=	5.10	x	3.30 x	1.00
		=	16.830	ton		

total load

Description	Dead load	Line load	Uniform load	Pedestrian load	total ton
		L/s span =	31.00		
Total weight	203.09	27.27	99.20	9.60	339.16
Reaction to pier	101.55	13.64	49.60	4.80	169.58
Load per m width	10.15	1.36	4.96	0.48	16.96
		R/s span =	40.00		
Total weight	800.51	27.27	247.79	24.00	1,099.57
Reaction to pier	400.26	13.64	123.90	12.00	549.79
Load per m width	40.03	1.36	12.39	1.20	54.98
Total load to pier	50.18	2.73	17.35	1.68	71.94

Breking forces = 5 % x " D " load (SNI No.1725–1989–F).Dep.PU
Left side span = 0.05 x 6.32 = 0.316 ton
Right side span = 0.05 x 13.75 = 0.688 ton

	Item	V load/m'	H load /m'	Xo	Yo	V.Xo	H.Yo
Super structure							
Left side	V-sp	16.958	1.523	3.050	7.000	51.722	10.661
Right side	V-sp	54.979	5.98	2.150	6.200	118.204	37.101
Pier	V-pier	29.342	4.401	2.420	2.541	71.008	11.183
Breking forces L/s			0.316		7.000		2.213
Breking forces R/s			0.688		6.200		4.263
Back fill	V-bf	28.120	4.216	2.700		75.924	
				Active earth pressure			
Up life	Pu1	(16.830)		2.550		(42.916)	
	Total	112.569	17.130			273.941	65.421

$$X' = \frac{Vo.Xo}{Vo\ tot} = \frac{273.941}{112.569} = 2.434\ m$$

$$Y' = \frac{Ho.Yo}{Ho\ tot} = \frac{65.421}{17.130} = 3.819\ m$$

V	=	V/m'	x	L		
	=	112.57	x	10.00		
	=	1,125.69	ton			
H	=	H/m'	x	L		
	=	17.13	x	10.00		
	=	171.30	ton			
M	=	V.(X–(0.5.W	–	H.(Y–tb)		
		0.5 x W	=	0.50	x	5.10
			=	2.55	m	
		(X –(0.5xW)	=	2.43	–	2.55
			=	(0.12)	m	
		(Y – tb)	=	3.819	–	1.30
			=	2.52	m	
		H x (Y – tb)	=	171.30	x	2.52
			=	431.53	t.m	
	=	V x (X–(0.5	–	(H x (Y–tb))		
	=	1,125.69	x	(0.12)	–	431.53
	=	(131.09)	–	431.53		
	=	(562.61)	t.m			

III.B.3.4 Earthquake condition
Case – IV,Low Water Level

	Wf1	=	1.85	m		
UP lift						
	H sat	=	0.000	m		
	P up	=	1.85	x	0.00 x	1.00
		=	0.00	ton		

	Item	V load/m'	H load /m'	Xo	Yo	V.Xo	H.Yo
Super structure							
Left side	V-sp	16.958	1.523	3.050	7.000	51.722	10.661
Right side	V-sp	54.979	5.984	2.150	6.200	118.204	37.101
Pier	V-pier	29.342	4.401	2.420	2.541	71.008	11.183
Breking forces L/s			0.316		7.000		2.213
Breking forces R/s			0.688		6.200		4.263
Back fill	V-bf	26.011	3.902	2.700	2.950	70.230	11.511
				Active earth pressure			
Up life	Pu1	0.000		0.000	0.000	0.000	
	Total	127.290	16.814		343.054	388.095	76.932

$$X' = \frac{Vo.Xo}{Vo\ tot} = \frac{343.054}{127.290} = 2.695\ m$$

$$Y' = \frac{Ho.Yo}{Ho\ tot} = \frac{76.932}{16.814} = 4.576\ m$$

V	=	V/m'	x	L		
	=	127.29	x	10.00		
	=	1,272.90	ton			
H	=	H/m'	x	L		
	=	16.81	x	10.00		
	=	168.14	ton			

M	=	V.(X-(0.5.W	-	H.(Y-tb)		
		0.5 x W	=	0.50	x	5.10
			=	2.55	m	
		(X -(0.5xW)	=	2.70	-	2.55
			=	0.15	m	
		(Y - tb)	=	4.576	-	1.30
			=	3.28	m	
		H x (Y - tb)	=	168.14	x	3.28
			=	550.74	t.m	
	=	V x (X-(0.5	-	(H x (Y-tb))		
	=	1,272.90	x	0.15	-	550.74
	=	184.66	-	550.74		
	=	(366.09)	t.m			

Project : Medan Flood Control	Japan International Cooperation Agency (JICA)	Calculation sheet	
Channel : Percut River		Date	
Structure : Br. P-3		Nos of sheet	
Station : PH 115 + 06 m		Prepared by	

III FOUNDATION

A. Pile for foundation

III.A.1 Charateristic of steel pipe pile

III.A.1.1 Normal condition

t' = thick of steel pipe corrotion
do = outer diameter of steel pipe
t = thick of steel pipe after corrosion
di = Inner diameter of steel pipe
Beta = characteristic value of pile
d = outside diameter of pile before corrotion
de = outside diameter of pile after corrotion
delta = the standard amount of displacement (cm)
k = coefficuent of horizontal subgrade reaction (kg/cm2)
Eo = modulus of deformation of the ground obtained from table 3.5

Inersia

Ic = Inersia concrete
Is = Inersia steel

Modulus elasticyty

Es = pile/steel
Ec = concrete

thick of corosion = t' = 0.100 x 1.0310 = 0.1031 cm
normal thick = te = 1.031 - 0.1031 = 0.9279 cm

de effective = do - 2 x te
de = 40.00 - 2.00 x 0.9279
= 40.00 - 1.86
= 38.14 cm

di = (de - (2 x t) cm
= 38.14 - 2.00 x 0.93
= 38.14 - 1.86
= 36.29 cm

de^4 = 2,116,967 cm4
di^4 = 1,734,089 cm4
de^4 - di^4 = 2,116,967 - 1,734,089
= 382,878 cm4

$$Beta = \left(\frac{kh.de}{4.E.I}\right)^{0.25}$$

kho = 1/30 x alpa x Eo
Alpha = 0.20 from table 3.5
Eo = 28 x N
= 28.00 x 10.00
= 280 kg/cm3

Permanent load
Ec (K-225) = 257,495 kg/cm2
Es = 1,897,200 kg/cm2

$$1/n = \frac{257{,}495}{1{,}897{,}200} = 0.1357$$

Ixc = @pi/64 x de^4 x 1/n
= 0.05 x 2,116,967 x 0.13572
= 14,104 cm^4

chars-a

Ixs = @pi/64 x (de^4 - di^4)
= 0.05 x 382,878
= 18,794 cm4

Ix tot. = Ixc + Ixs
= 14,104 + 18,794
= 32,898 cm2

E.I = 1,897,200 x 32,898
= 62,414,849,390 kg.cm2

4.E.I = 4 x 62,414,849,390
= 249,659,397,562 kg.cm2

kho = 1/30 x Alpa x Eo
= 0.03 x 1 x 280
= 9.33 kg/cm3

kh = kho x (Bh) / 30)^-0.75 (1)------ equition

Bh = @sqrt (de / Beta)

$$\frac{de}{Beta} = \frac{38.1442}{0.005031} = 7{,}582.47$$

------>>>> Beta find by trial

Bh = 87.08
87.08

$$Bh/30 = \frac{87.08}{30.00} = 2.90$$

(Bh/30)^-0.75 = 0.45
kh = 9.33 x 0.45
= 4.1971

$$Beta = \left(\frac{kh \times de}{4.EI}\right)^{0.25}$$ (2)----- equition

$$kh = \frac{Beta^4 \times 4.EI}{de}$$

$$kh = \frac{6.404308E-10}{38.1442} \times 249{,}659{,}397{,}562$$

------ (1) = ------ (2)

4.1971 = 4.1917 kg/cm3

By trial method, kh left side equal to kh right side

kh = 4,191.71 ton / m3
Beta = 0.005031 cm-1
Beta = 0.503058 m-1

kh.D = 4.19 x 38.14
= 159.89 kg/cm2

Allowance Horizontal Force

$$Han = \frac{kh.D}{Beta} \times delta$$

$$Han = \frac{159.89}{0.01} \times 1.00$$

= 31,784 kg
= 31.784 ton

chars-n

Project : Medan Flood Control	Japan International Cooperation Agency (JICA)	Calculation sheet	
Channel : Percut River		Date	
Structure : Br. P-3		Nos of sheet	
Station : PB 115 + 06 m		Prepared by	

III.A.1.2 Earthquake condition

t' = thick of steel pipe corrotion.
do = outer diameter of steel pipe
t = thick of steel pipe after corrosion
di = Inner diameter of steel pipe
Beta = characteristic value of pile
d = outside diameter of pile before corrotion
de = outside diameter of pile after corrotion
delta = the standard amount of displacement (cm)
k = coefficient of horizontal subgrade reaction (kg/cm2)
Eo = modulus of deformation of the ground obtained from table 3.5

Inersia
Ic = Inersia concrete
Is = Inersia steel

Modulus elasticyty
Es = pile/steel
Ec = concrete

thick of corosion = t' = 0.100 x 1.0310 = 0.1031 cm
normal thick = te = 1.031 - 0.1031 = 0.9279 cm

de effective = do - 2 x te
de = 40.00 - 2.00 x 0.9279
= 40.00 - 1.86
= 38.14 cm

di = (de - (2 x t) cm
= 38.14 - 2.00 x 0.93
= 38.14 - 1.86
= 36.29 cm

de^4 = 2,116,967 cm4
di^4 = 1,734,089 cm4
de^4 - di^4 = 2,116,967 - 1,734,089
= 382,878 cm4

$$Beta = \left(\frac{kh.de}{4.E.I}\right)^{0.25}$$

kho = 1/30 x alpa x Eo
Alpha = 0.20 from table 3.5
Eo = 28 x N
= 28.00 x 10.00
= 280 kg/cm3

Temporary load
Ec (K-225) = 386,242 kg/cm2
Es = 1,897,200 kg/cm2

$$1/n = \frac{386{,}242}{1{,}897{,}200} = 0.2036$$

Ixc = @pi/64 x de^4 x 1/n
= 0.05 x 2,116,967 x 0.20359
= 21,156 cm^4

chars-q

Ixs = @pi/64 x (de^4 - di^4)
= 0.05 x 382,878
= 18,794 cm4

Ix tot. = Ixc + Ixs
= 21,156 + 18,794
= 39,950 cm2

E.I = 1,897,200 x 39,950
= 75,793,769,494 kg.cm2
4.E.I = 4.00 x 75,793,769,494
= 303,175,077,976 kg.cm2
kho = 1/30 x Alpa x Eo
= 0.03 x 1 x 280
= 9.33 kg/cm3

$$kh = kho \times (Bh/30)^{-0.75} \quad \text{(1)------ equition}$$

Bh = @sqrt (de / Beta)

$$\frac{de}{Beta} = \frac{38.1442}{0.004771} = 7{,}995.58$$

------>>>> Beta find by trial

Bh = 89.42
89.42

$$Bh/30 = \frac{89.42}{30.00} = 2.98$$

(Bh/30)^-0.75 = 0.44
kh = 9.33 x 0.44
= 4.1144

$$Beta = \left(\frac{kh \times de}{4.EI}\right)^{0.25} \quad \text{(2)----- equition}$$

$$kh = \frac{Beta^4 \times 4.EI}{de}$$

$$kh = \frac{5.18E-10}{38.1442} \times 303{,}175{,}077{,}976$$

------ (1) = ------ (2)

4.1144 = 4.1170 kg/cm3

By trial method, kh left side equal to kh right side

kh = 4,116.97 ton / m3
Beta = 0.004771 cm-1
Beta = 0.477066 m-1

kh.D = 4.12 x 38.14
= 157.04 kg/cm2

Allowance Horizontal Force

$$Han = \frac{kh.D}{Beta} \times delta$$

$$Han = \frac{157.04}{0.00} \times 1.00$$

= 32,918 kg
= 32.918 ton

chars-q

Project	: Medan Flood Control	Japan International Cooperation Agency (JICA)	Calculation sheet	
Channel	: Percut River		Date	
Structure	: Br. P-3		Nos of sheet	
Station	: PE 115 + 06 m		Prepared by	

III.A.2 Axila Bearing Load Allowable for a Pile

do	=	outer diameter of a pile (cm)						
di	=	inner diameter of a pile (cm)						
t	=	normal thick						
te	=	effective thick						
t'	=	corrrosion thick						
de	=	dia. effective						
Apl	=	area of a pile (cm2)						
Lp	=	Length of pile						
d	=	40.64	cm					
t	=	1.031	cm					
t'	=	0.10 x t						
	=	0.10	x	1.0310				
	=	0.1031	cm					
te	=	t - t'						
	=	1.0310	-	0.1031				
	=	0.9279	cm					
de	=	do - 2 x te						
	=	40.64	-	1.86				
	=	38.78	cm					
re	=	0.1939	m					
di	=	(de - (2 x te)	cm					
	=	38.78	-	1.856				
	=	36.93	cm					
de^2	=	1504.21	cm2					
di^2	=	1,363.7067	cm2					
de^2-di^2	=	1,504.2142	-	1363.71				
	=	140.5074	cm2					
	=	0.0141	m2					
	=	0.25	x	3.14	x(	de^2	-	di^2)
	=	0.25	x	3.14	x	140.5074		
	=	110.35	cm2					
	=	0.0110	m2					

Modulus Elasticity

E pile	=	1,897,200	kg/cm2	
	=	18,972,000	t/m2	
Concrete K.225				
Ec	=	257,495	kg/cm2	
	=	2,574,950	t/m2	

$$1/n = \frac{Ec}{Ep} = \frac{257{,}495}{1{,}897{,}200} = 0.1357$$

di-transformed	=	d t		
dt	=	di x 1/n		
	=	36.93	x	0.1357
	=	5.0121	cm	
dt^2	=	25.1207	cm2	
de^2 - dt^2	=	1504.21	-	25.12
	=	1479.09		

Ap2	=	@pi/64 x (de^2-(dt)^2)						
	=	0.25	x	3.14	x	1,479.09		
	=	1,161.68	cm2					
	=	0.1162	m2					
Ap	=	Apl	+	Ap2				
	=	0.0110	+	0.1162				
	=	0.1272	m2					
Lp	=	28.00	m					
N1	=	50.00						
N	=	40.00						

N - value of embedded

N-value top	N-value bot.	Elv. top	Elv. bot.	avrg depth	tot depth	avrg N-value	tot. N-value	Kind of soils	soil frictio (t/m2)	lixfi
6.00	7.00	6.427	5.427	1.00	1.00	6.50	6.50	clay	5.40	5.40
7.00	8.00	5.427	4.427	1.00	2.00	7.50	7.50	do	5.40	5.40
8.00	6.00	4.427	3.427	1.00	3.00	7.00	7.00	do	5.40	5.40
6.00	23.00	3.427	2.427	1.00	4.00	14.50	14.50	do	5.40	5.40
23.00	6.00	2.427	1.427	1.00	5.00	14.50	14.50	fine sand	6.80	6.80
6.00	3.00	1.427	0.427	1.00	6.00	4.50	4.50	do	6.80	6.80
3.00	4.00	0.427	(0.573)	1.00	7.00	3.50	3.50	do	6.80	6.80
4.00	7.00	(0.573)	(1.573)	1.00	8.00	5.50	5.50	do	6.80	6.80
7.00	6.00	(1.573)	(2.573)	1.00	9.00	6.50	6.50	clay	6.80	6.80
6.00	8.00	(2.573)	(3.573)	1.00	10.00	7.00	7.00	do	6.80	6.80
8.00	7.00	(3.573)	(4.573)	1.00	11.00	7.50	7.50	do	6.80	6.80
7.00	8.00	(4.573)	(5.573)	1.00	12.00	7.50	7.50	fine sand	3.80	3.80
8.00	6.00	(5.573)	(6.573)	1.00	13.00	7.00	7.00	do	3.80	3.80
6.00	9.00	(6.573)	(7.573)	1.00	14.00	7.50	7.50	do	3.80	3.80
9.00	8.00	(7.573)	(8.573)	1.00	15.00	8.50	8.50	do	3.80	3.80
8.00	19.00	(8.573)	(9.573)	1.00	16.00	13.50	13.50	fine sand	3.80	3.80
19.00	28.00	(9.573)	(10.573)	1.00	17.00	23.50	23.50	do	6.80	6.80
28.00	45.00	(10.573)	(11.573)	1.00	18.00	36.50	36.50	do	6.80	6.80
45.00	50.00	(11.573)	(12.573)	1.00	19.00	47.50	47.50	do	6.80	6.80
50.00	34.00	(12.573)	(13.573)	1.00	20.00	42.00	42.00	do	6.80	6.80
34.00	35.00	(13.573)	(14.573)	1.00	21.00	34.50	34.50	do	6.80	6.80
35.00	28.00	(14.573)	(15.573)	1.00	22.00	31.50	31.50	do	6.80	6.80
28.00	24.00	(15.573)	(16.573)	1.00	23.00	26.00	26.00	do	6.80	6.80
24.00	42.00	(16.573)	(17.573)	1.00	24.00	33.00	33.00	do	6.80	6.80
42.00	37.00	(17.573)	(18.573)	1.00	25.00	39.50	39.50	do	6.80	6.80
37.00	36.00	(18.573)	(19.573)	1.00	26.00	36.50	36.50	do	6.80	6.80
36.00	43.00	(19.573)	(20.573)	1.00	27.00	39.50	39.50	do	6.80	6.80
			sum	27.00					163.00	163.00

Material is fine sand

$$N = \frac{N1 + N2'}{2}$$

N2' = mean N-value in the range from the tip of the pile to 4 x D above.

de = diameter or width of the pile

10 x de = 387.84 cm

N2' = (42+37+36+43)/4 = 39.50

$$N = \frac{50.00 + 39.50}{2} = 44.75 < 40 = 40$$

Ru = Ultimate bearing capacity of the pile

li = statum thickness with the skin friction power taken into account (m)

fi = maximum unit area skin friction power of statum with the skin friction power taken into account (t/m2)

4.D	=	4.00	x	0.3878	=	1.55	m
l	=	0.50	x	1.55	=	0.78	m
l/D	=	0.78	:	0.39	=	2.00	

qd/N	=	8.00									
qd	=	8.00	x	N							
	=	8.00	x	40.00							
	=	320.00	ton/m2								
qd.Ap	=	320	x	0.1272							
	=	40.71	ton								
U	=	2 x @pi x re									
	=	2.00	x	3.14	x	0.1939					
	=	1.22	m								
Ru	=	qd.A + U.(total li.fi)									
	=	40.71	+	1.22	x	163.00					
	=	239.311	ton								

Lpc	=	Length of pile filled by concrete									
	=	9.00	m								
Y soil	=	2.00	t/m3								

Ws	=	Effective weight of soil which replace by pile									
	=	0.25	x	@pi	x	de^2	x	LP		Ysoil	
	=	0.25	x	3.14	x	0.1504	x	27.00	x	2.00	
	=	6.38	ton								

Wc	=	Effective weight of concrete which filled in the pile									
	=	0.25		@pi		di^2		Lpc		Y concrete	
	=	0.25	x	3.14	x	0.1364	x	9.00	x	2.50	
	=	2.41	ton								

Force bearing capacity of a pile in Pier

Permanent load safety factor Sn = 3.00

Temporary load safety factor Sq = 2.00

Case – I, Normal Condition

Ran	=	1/Sn	x(	Ru	–	Ws)	+	Ws	–	W	
	=	1.00/3.00	x(	239.31	–	6.38	)+	6.38	–	2.41	
	=	0.33	x(	232.93	)+	3.97					
	=	77.64	+	3.97							
	=	81.61	ton/nos								

by material of pile

Rp	=	Ap 1 x fs	=	110.35	x	1,400	=	154,496	kg
Rp	=	154.50	ton						
R minimum	=	81.61	ton						

Case – II, Earthquake Condition

Raq	=	1.00/2.00	x(	239.31	–	6.38	)+	6.38	–	2.41 x	
	=	0.50	x(	232.93	) +	3.97					
	=	116.47	+	3.97							
	=	120.44	ton/nos								

Case		V	H	M	Allowance bearing pile		Nos of pile	
		ton	ton	ton.m	Vertical	Horizontal	Vertical	Horizontal
		Normal condition						
case – I	Hwl	524.59	42.20	88.74	81.61	31.66	1.33	1.33
case – II	Lwl	594.76	83.50	83.43	81.61	31.66	2.64	2.64
		Earthquake condition						
case – III	Hwl	524.59	132.12	–96.75	120.44	32.69	4.04	4.04
case – IV	Lwl	594.76	172.72	–92.84	120.44	32.69	5.28	5.28

axl – alw

Project	: Medan Flood Control	Japan International Cooperation Agency (JICA)
Channel	: Percut River	
Structure	: Br. P–3	
Station	: PE 115 + 06 m	

Calculation sheet

Date

Nos of sheet

Prepared by

III.A.3 Spring Constante of steel pipe pile

III.A.3.1 Normal condition

h	=	axial length of pile above the design groung surface
Beta	=	charateristic value of pile
k	=	coeficient of horozontal sub grade reaction (kg/cm^2)
IE	=	flexural rigidity of pile
K1,K2,K3&	=	spring constante
Kv	=	Axial force (axial spring constante)
t	=	thick of steel pipe before corrotion (cm)
t'	=	thick of steel pipe corrosion (cm)
te	=	thick of steel pipe after corrosion (cm)

d	=	40.64	cm		
t	=	1.031	cm		
t'	=	0.103	cm		
te	=	1.0310	–	0.1031	
	=	0.9279	cm		
de	=	d	–	2 x te	
	=	40.64	–	1.8558	
	=	38.78	cm		
de^2	=	1,504.21	cm2		
di	=	(de – (2 x te)	cm		
	=	38.78	–	1.8558	
	=	36.93	cm		
di^2	=	1,363.71	cm2		
de^2 – di	=	1,504.21	–	1,363.71	
	=	140.51	cm2		
de^4	=	2,262,660	cm4		
di^4	=	1,859,696	cm4		
de^4 – di'	=	2,262,660	–	1,859,696	
	=	402,964	cm4		

Modulus Elasticity

Permanent load

Ec (K–225	=	257,495	kg/cm2	
Es	=	1,897,200	kg/cm2	
I/n	=	257,495/1,897,200	=	0.1357
dt	=	di x I/n		
	=	36.9284	x	0.1357
	=	5.0121	cm	
dt^2	=	25.1207	cm2	

Ixc	=	@pi/64 x (dt^4)		
	=	0.0491	x	631
	=	30.98	cm^4	
Ixc	=	@pi/64 x (de^4 – di^4)		
	=	0.04909	x	402,964
	=	19,780	cm4	
I tot.	=	Ixc	+	Ixc
	=	30.9767	+	19,780.46
	=	19,811.44	cm4	
	=	0.000198114	m4	
As1	=	1/4 x 3.14 x dt^2		
	=	0.25	x	3.14 x 25.12
	=	19.73	cm2	

ks – n

As2	=	1/4*3.14*(de^2−di^2)				
	=	0.25	x	3.14	x	140.51
	=	110.35	cm2			
A tot.	=	As1	+	As2		
	=	19.73	+	110.35		
	=	130.08	cm2			
	=	0.013008406	m2			
Le	=	27.00	m			

$$Kv = a \times \frac{A\,tot.}{Le} \times Ep$$

$$a = 0.027 \times \frac{Le}{de} + 0.2$$

$$= 0.027 \times \frac{2,700.00}{38.7842} + 0.2$$

$$= 1.87963 + 0.2000$$

$$= 2.0796$$

Spring constante on axial force = Kv

$$Kv = a \times \frac{A\,tot. \times Epile}{Le}$$

$$= 2.08 \times \frac{130.08 \times 1,897,200}{2,700}$$

	=	2.08	x	91,406		
	=	190,090.24	kg/cm			
	=	19,009	ton/m			
EI	=	1,897,200	x	19,811		
	=	3.76E+10	kg.cm2			
	=	3,759	t.m2			
2.EI	=	2.00	x	3.76E+03		
	=	7,517	t.m2			
4.EI	=	4	x	3,759		
	=	15,035	t.m2			
Beta	=	0.00503058	cm−1			
Beta	=	0.503058	m−1			

Spring constante K1,K2 and K3

K1	=	4.EI.Beta^3				
	=	1.50E+04	x	0.127307		
	=	1,914	t/m			
K2=K3	=	2.EI.Beta^2				
	=	7,517	x	0.253067		
	=	1,902	t/rad			
K4	=	2.EI.Beta				
	=	7,517.25	x	0.503058		
	=	3,782	t.m/rad			

ks−n

Project : Medan Flood Control	Japan International Cooperation Agency (JICA)	Calculation sheet
Channel : Percut River		Date
Structure : Br. P−3		Nos of sheet
Station : PE 115 + 06 m		Prepared by

III.A.3.2 Earthquake condition

h	=	axial length of pile above the design groung surface
Beta	=	charateristic value of pile
k	=	coeficient of horozontal sub grade reaction (kg/cm^2)
IE	=	flexural rigidity of pile
K1,K2,K3	=	spring constante
Kv	=	Axial force (axial spring constante)
t	=	thick of steel pipe before corrotion (cm)
t'	=	thick of steel pipe corrosion (cm)
te	=	thick of steel pipe after corrosion (cm)

d	=	40.64	cm	
t	=	1.031	cm	
t'	=	0.103	cm	
te	=	1.0310	−	0.1031
	=	0.9279	cm	
de	=	d	− 2 x te	
	=	40.64	−	1.8558
	=	38.78	cm	
de^2	=	1,504.21	cm2	
di	=	(de − (2 x te)	cm	
	=	38.78	−	1.8558
	=	36.93	cm	
di^2	=	1,363.71	cm2	
de^2 − di	=	1,504.21	−	1,363.71
	=	140.51	cm2	
de^4	=	2,262,660	cm4	
di^4	=	1,859,696	cm4	
de^4 − di'	=	2,262,660	−	1,859,696
	=	402,964	cm4	

Modulus Elasticity

Temporary load

Ec (K−225	=	514,991	kg/cm2	
Es	=	1,897,200	kg/cm2	
1/n	=	514,991 / 1,897,200	=	0.2714
dt	=	di x 1/n		
	=	36.9284	x	0.2714
	=	10.0241	cm	
dt^2	=	100.4833	cm2	
I1	=	@pi/64 x (dt^4)		
	=	0.0491	x	10,097
	=	495.63	cm^4	
I2	=	@pi/64 x (de^4 − di^4)		
	=	0.04909	x	402,964
	=	19,780	cm4	
I tot.	=	I1	+	I2
	=	496	+	19,780.46
	=	20,276.09	cm4	
	=	0.00020	m4	
As1	=	1/4 x 3.14 x dt^2		
	=	0.25	x	3.14 x 100.48
	=	78.92	cm2	

ks−q

As2 = 1/4.3.14.(dc^2−di^2)
= 0.25 x 3.14 x 140.51
= 110.35 cm2

A tot. = As1 + As2
= 78.92 + 110.35
= 189.27 cm2
= 0.01892 m2

Lp = 27.00 m

$$Kv = a \times \frac{A\,tot.}{Le} \times Ep$$

$$a = 0.027 \times \frac{Lp}{de} + 0.2$$

$$= 0.027 \times \frac{2{,}700.00}{38.78} + 0.2$$

= 1.87963 + 0.2000

= 2.0796

Spring constante on axial force = Kv

$$Kv = a \times \frac{A\,tot. \times Epile}{Lp}$$

$$= 2.08 \times \frac{189.27 \times 1{,}897{,}200}{2{,}700}$$

= 2.08 x 132,996
= 276,583.34 kg/cm
= 27,658 ton/m

EI = 1,897,200 x 20,276
= 3.85E+10 kg.cm2
= 3,847 t.m2

2.EI = 2 x 3.85E+03
= 7,694 t.m2

4.EI = 4 x 3,847
= 15,387 t.m2

Beta = 0.00477 cm−1
Beta = 0.47706 m−1

Spring constante K1,K2 and K3

K1 = 4.EI.Beta^3
= 1.54E+04 x 0.108576
= 1,671 t/m

K2=K3 = 2.EI.Beta^2
= 7,694 x 0.227591
= 1,751 t/rad

K4 = 2.EI.Beta
= 7,693.56 x 0.477066
= 3,670 t.m/rad

ks−q

Xi.(n.Kv.cos ^2 ø)	=	(142,568)	0	141,156	
Xi.(n.K1.sin ^2 ø)	=	0	0	142	
Xi^2.(n.Kv.cos ^2 ø)	=	178,209	0	176,445	
Xi^2.(n.K1.sin ^2 ø)	=	0	0	178	
Xi.(n.K2.sin ø)	=	0	0	1,419	
Xi.(n.K3.sin ø)	=	0	0	1,419	

Axx = tot.(K1 x cos ^2 ø + Kv x sin ^2 ø)

				Total
n.K1.cos ^2 ø	=	11,484	11,484	11,370	
n.Kv.sin ^2 ø	=	0	0	1,129	
total		11,484	11,484	12,499	35,467

Axy = tot.(Kv − K1) x sin ø x cos ø)

n.(Kv−K1).sin ø.cosø	=	0	0	10,154	
A xy	=	0	0	10,154	10,154
A yx	=	0	0	10,154	10,154

Axa = tot.(KV − K1) x Xi x (sin ø x cos ø) − (K2 x cos ø))

Xi.(n.(Kv − K1).sin ø.cos ø)	=	0	0	12,693	
− n.K2.cos ø	=	(11,412)	(11,412)	(11,355)	
Axa		(11,412)	(11,412)	1,338	(21,486)
Aax	=	(11,412)	(11,412)	1,338	(21,486)

Ayy = tot.(KV x cos ^2 ø + (K1 x sin ^2 ø))

n.Kv.cos ^2 ø	=	114,054	114,054	112,925	
n.K1.sin ^2 ø	=	0	0	114	
Ayy		114,054	114,054	113,039	341,147

Aya = tot.(KV x cos ^2 ø + K1 x sin ^2 ø) x Xi + K2 x sin ø)

Xi.(n.Kv.cos ^2 ø)	=	(142,568)	0	141,156	
Xi.(n.K1.sin ^2 ø)	=	0	0	142	
n.K2.sin ø	=	0	0	1,135	
Aya	=	(142,568)	0	142,434	(134)
Aay	=	(142,568)	0	142,434	(134)

Aaa = tot.(KV x cos ^2 ø + K1 x sin ^2 ø) x Xi ^2 ^ + (K2+K3) Xi sin ø + K4)

Xi^2.(n.Kv.cos ^2 ø)	=	178,209	0	176,445	
Xi^2.(n.K1.sin ^2 ø)	=	0	0	178	
n.(K2+K3).Xi.sin ø	=	0	0	2,839	
n.K4	=	22,692	22,692	22,692	
Aaa		200,901	22,692	202,153	425,747

coe−disn

Project	: Medan Flood Control	Japan International Cooperation Agency (JICA)	Calculation sheet	
Channel	: Percut River		Date	
Structure	: Br. P-3		Nos of sheet	
Station	: Pe 115 + 06 m		Prepared by	

III.A.4 Displacement of Head Pile
III.A.4.1 Normal COndition

Axx = tot.(K1 x cos^2 ø + Kv x sin ^2 ø)
Axy = tot.(Kv − K1) x sin ø x cos ø)
Ayx = tot.(Kv − K1) x sin ø x cos ø)
Axa = tot.(KV − K1) x Xi x (sin ø x cos ø) − (K2 x cos ø))
Aax = tot.(KV − K1) x Xi x (sin ø x cos ø) − (K2 x cos ø))
Ayy = tot.(KV x cos ^2 ø + (K1 x sin ^2 ø))
Aya = tot.(KV x cos ^2 ø + K1 x sin ^2 ø) x Xi + K2 x sin ø)
Aay = tot.(KV x cos ^2 ø + K1 x sin ^2 ø) x Xi + K2 x sin ø)
Aaa = tot.(KV x cos ^2 ø + K1 x sin ^2 ø) x Xi^2 ^ + (K2 + K3).Xi sin ø + K4)

Right Abutment		Rows		
Nos. of row		(1)	(2)	(3)
side		L/s	C/l	R/s
sign		(−)	0	(+)
angle		> 0	0	< 0
Xi	=	(1.25)	0.00	1.25
n	=	6.00	6.00	6.00
angle degree	=	0.0000	0.00	5.7100
sin ø	=	0.0000	0.00	0.10
cos ø	=	1.0000	1.0000	0.9950
sin ø x cosø	=	0.0000	0.00	0.10
sin ^2 ø	=	0.0000	0.00	0.01
cos ^2 ø	=	1.0000	1.0000	0.9901
Xi^2	=	1.5625	0.0000	1.5625
K1	=	1,914	1,914	1,914
K2	=	1,902	1,902	1,902
K3	=	1,902	1,902	1,902
K4	=	3,782	3,782	3,782
Kv	=	19,009	19,009	19,009
n.K1	=	11,484	11,484	11,484
n.K2	=	11,412	11,412	11,412
n.K3	=	11,412	11,412	11,412
n.K4	=	22,692	22,692	22,692
n.Kv	=	114,054	114,054	114,054
n.(K2 + K3)	=	22,824	22,824	22,824
Xi.(n.(K2 + K3))	=	(28,530)	0	28,530
Xi.(n.(K2 + K3)).sin ø	=	0	0	2,839
n.(Kv−K1)	=	102,570	102,570	102,570
n.(Kv−K1).sin ø.cosø	=	0	0	10,154
n.K1.cos ^2 ø	=	11,484	11,484	11,370
n.Kv.sin ^2 ø	=	0	0	1,129
n.Kv.cos ^2 ø	=	114,054	114,054	112,925
n.K1.sin ^2 ø	=	0	0	114
n.K1.sin ø.cosø	=	0	0	1,137
n.Kv.sin ø.cosø	=	0	0	11,291
Xi.(n.K1.sin ø.cos ø)	=	0	0	1,421
Xi.(n.Kv.sin ø.cos ø)	=	0	0	14,114
n.K2.cos ø	=	11,412	11,412	11,355
n.K2.sin ø	=	0	0	1,135
n.K3.sin ø	=	0	0	1,135

coe−disn

Project	: Medan Flood Control	Japan International Cooperation Agency (JICA)	Calculation sheet	
Channel	: Percut River		Date	
Structure	: Br. P-3		Nos of sheet	
Station	: PE 115 + 06 m		Prepared by	

III.A.4.2 Earthquake condition

Axx = tot.(K1 x cos^2 ø + Kv x sin ^2 ø)
Axy = tot.(Kv − K1) x sin ø x cos ø)
Ayx = tot.(Kv − K1) x sin ø x cos ø)
Axa = tot.(KV − K1) x Xi x (sin ø x cos ø) − (K2 x cos ø))
Aax = tot.(KV − K1) x Xi x (sin ø x cos ø) − (K2 x cos ø))
Ayy = tot.(KV x cos ^2 ø + (K1 x sin ^2 ø))
Aya = tot.(KV x cos ^2 ø + K1 x sin ^2 ø) x Xi + K2 x sin ø)
Aay = tot.(KV x cos ^2 ø + K1 x sin ^2 ø) x Xi + K2 x sin ø)
Aaa = tot.(KV x cos ^2 ø + K1 x sin ^2'ø) x Xi ^2 ^ + (K2 + K3).Xi sin ø + K4)

Right Abutment		Rows		
Nos. of row		(1)	(2)	(3)
side		L/s	C/l	R/s
sign		(−)	0	(+)
angle		> 0	0	< 0
Xi	=	(1.25)	0.00	1.25
n	=	6.00	6.00	6.00
angle degree	=	0.0000	0.00	5.7100
sin ø	=	0.0000	0.00	0.10
cos ø	=	1.0000	1.0000	0.9950
sin ø x cosø	=	0.0000	0.00	0.10
sin ^2 ø	=	0.0000	0.00	0.01
cos ^2 ø	=	1.0000	1.0000	0.9901
Xi^2	=	1.5625	0.0000	1.5625
K1	=	1,671	1,671	1,671
K2	=	1,751	1,751	1,751
K3	=	1,751	1,751	1,751
K4	=	3,670	3,670	3,670
Kv	=	27,658	27,658	27,658
n.K1	=	10,026	10,026	10,026
n.K2	=	10,506	10,506	10,506
n.K3	=	10,506	10,506	10,506
n.K4	=	22,020	22,020	22,020
n.Kv	=	165,948	165,948	165,948
n.(K2 + K3)	=	21,012	21,012	21,012
Xi.(n.(K2 + K3))	=	(26,265)	0	26,265
Xi.(n.(K2 + K3)).sin ø	=	0	0	2,613
n.(Kv−K1)	=	155,922	155,922	155,922
n.(Kv−K1).sin ø.cosø	=	0	0	15,436
n.K1.cos ^2 ø	=	10,026	10,026	9,927
n.Kv.sin ^2 ø	=	0	0	1,643
n.Kv.cos ^2 ø	=	165,948	165,948	164,305
n.K1.sin ^2 ø	=	0	0	99
n.K1.sin ø.cosø	=	0	0	993
n.Kv.sin ø.cosø	=	0	0	16,429
Xi.(n.K1.sin ø.cos ø)	=	0	0	1,241
Xi.(n.Kv.sin ø.cos ø)	=	0	0	20,536
n.K2.cos ø	=	10,506	10,506	10,454
n.K2.sin ø	=	0	0	1,045
n.K3.sin ø	=	0	0	1,045
Xi.(n.Kv.cos ^2 ø)	=	(207,435)	0	205,382
Xi.(n.K1.sin ^2 ø)	=	0	0	124

coe−disq

Xi^2.(n.Kv.cos ^2 ø)	=	259,294	0	256,727
Xi^2.(n.K1.sin^2 ø)	=	0	0	155
Xi.(n.K2.sin ø)	=	0	0	1,307
Xi.(n.K3.sin ø)	=	0	0	1,307

Axx = tot.(K1 x cos^2 ø + Kv x sin ^2 ø)

					Total
n.K1.cos^2 ø	=	10,026	10,026	9,927	
n.Kv.sin^2 ø	=	0	0	1,643	
total		10,026	10,026	11,569	31,621

Axy = tot.(Kv – K1) x sin ø x cos ø)

n.(Kv–K1).sin ø.cosø	=	0	0	15,436	
A xy	=	0	0	15,436	15,436
A yx	=	0	0	15,436	15,436

Axa = tot.(KV – K1) x Xi x (sin ø x cos ø) – (K2 x cos ø))

Xi.(n.(Kv – K1).sin ø.cos ø)	=	0	0	19,295	
– n.K2.cos ø	=	(10,506)	(10,506)	(10,454)	
Axa		(10,506)	(10,506)	8,841	(12,171)
Aax	=	(10,506)	(10,506)	8,841	(12,171)

Ayy = tot.(KV x cos ^2 ø + (K1 x sin ^2 ø))

n.Kv.cos ^2 ø	=	165,948	165,948	164,305	
n.K1.sin ^2 ø	=	0	0	99	
Ayy		165,948	165,948	164,405	496,301

Aya = tot.(KV x cos ^2 ø + K1 x sin ^2 ø) x Xi + K2 x sin ø)

Xi.(n.Kv.cos ^2 ø)	=	(207,435)	0	205,382	
Xi.(n.K1.sin ^2 ø)	=	0	0	124	
n.K2.sin ø	=	0	0	1,045	
Aya	=	(207,435)	0	206,551	(884)
Asy	=	(207,435)	0	206,551	(884)

Aaa = tot.(KV x cos ^2 ø + K1 x sin ^2 ø) x Xi^2 ^ + (K2+K3) Xi sin ø + K4)

Xi^2.(n.Kv.cos ^2 ø)	=	259,294	0	256,727	
Xi^2.(n.K1.sin ^2 ø)	=	0	0	155	
n.(K2+K3).Xi.sin ø	=	0	0	2,613	
n.K4	=	22,020	22,020	22,020	
Aaa		281,314	22,020	281,515	584,849

coe-disq

Project	: Medan Flood Control	Japan International Cooperation Agency (JICA)
Channal	: Percut River	
Structure	: Br. P-3	
Station	: PE 115 + 08	

Calculation sheet — Date / Nos of sheet / Prepared by

III.A.5 Coeficient displacement of head pile
III.A.5.1 Normal condition
Case – I High Water Level

Axx	dx	+	Axy	dy	+	Axz	dz	= H
Ayx	dx	+	Ayy	dy	+	Ayz	dz	= V
Azx	dx	+	Azy	dy	+	Azz	dz	= M

35,467.00	dx	+	10,154.00	dy	+	(21,486.00)	dz	= 42.20 H
10,154.00	dx	+	341,147.00	dy	+	(134.00)	dz	= 524.59 V
(21,486.00)	dx	+	(134.00)	dy	+	425,747.00	dz	= 88.74 M

det A

3.547E+04	341147	–134	=
	–134	425747	
10154	10154	–134	=
	–21486	425747	
–21486	10154	341147	=
	–21486	–134	

+	35467	x(	341147	x	425747	–	–134	x	–134)			
	35467	x(	145242311809	–	–17956	)				=	5.15E+15	
–	10154	x(	10154	x	425747	–	–21486	x	–134)			
	10154	x(	4323035038	–	–2879124	)				=	–4.39E+13	
+	–21486	x(	10154	x	–134	–	–21486	x	341147)			
	–21486	x(	–1360638	–	7329884442	)				=	–1.57E+14	
											4.95E+15	

1/det = 1/4.95E+15

Kofactor

a11	3.41E+05	–1.34E+02	+(	3.41E+05	x	4.26E+05	)–(–1.34E+02	x	–1.34E+02	)= C11		
	–1.34E+02	4.26E+05	+(	1.45E+11			)–(1.80E+04	)		=	1.45E+11	
a12	1.02E+04	–1.34E+02	–(	1.02E+04	x	4.26E+05	)–(–2.15E+04	x	–1.34E+02	)= C12		
	–2.15E+04	4.26E+05	–(	4.32E+09			)–(2.86E+08	)		=	–4.32E+09	
a13	1.02E+04	3.41E+05	+(	1.02E+04	x	–1.34E+02	)–(–2.15E+04	x	3.41E+05	)= C13		
	–2.15E+04	–1.34E+02	+(	–1.36E+08			)–(–7.33E+09	)		=	7.33E+09	
a21	1.02E+04	–2.15E+04	–(	1.02E+04	x	4.26E+05	)–(–1.34E+02	x	–2.15E+04	)= C21		
	–1.34E+02	4.26E+05	–(	4.32E+09			)–(2.86E+08	)		=	–4.32E+09	
a22	3.55E+04	–2.15E+04	+(	3.55E+04	x	4.26E+05	– –2.15E+04	x	–2.15E+04	)= C22		
	–2.15E+04	4.26E+05	+(	1.51E+10			– 4.62E+08	)		=	1.46E+10	
a23	3.55E+04	1.02E+04	+(	3.55E+04	x	–1.34E+02	– –2.15E+04	x	1.02E+04	)= C23		
	–2.15E+04	–1.34E+02	+(	–4.75E+08			– –2.18E+06	)		=	–2.13E+08	
a31	1.02E+04	–2.15E+04	+(	1.02E+04	x	–1.34E+02	– 3.41E+05	x	–2.15E+04	)= C31		
	3.41E+05	–1.34E+02	+(	–1.36E+08			– –7.33E+09	)		=	7.33E+09	
a32	3.55E+04	–2.15E+04	–(	3.55E+04	x	–1.34E+02	– 1.02E+04	x	–2.15E+04	)= C32		
	1.02E+04	–1.34E+02	–(	–4.75E+08			– –2.18E+06	)		=	–2.13E+08	
a33	3.55E+04	1.02E+04	+(	3.55E+04	x	3.41E+05	– 1.02E+04	x	1.02E+04	)= C33		
	1.02E+04	3.41E+05	+(	1.21E+10			– 1.03E+08	)		=	1.20E+10	

C =

1.45E+11	–4.32E+09	7.33E+09
–4.32E+09	1.46E+10	–2.13E+08
7.33E+09	–2.13E+08	1.20E+10

Adj C = C1 =

1.45E+11	–4.32E+09	7.33E+09
–4.32E+09	1.46E+10	–2.13E+08
7.33E+09	–2.13E+08	1.20E+10

A^–1 = adj A / det A = 1/det A x

1.45E+11	–4.32E+09	7.33E+09
–4.32E+09	1.46E+10	–2.13E+08
7.33E+09	–2.13E+08	1.20E+10

=

4.22E+01	4.22E+01	4.22E+01
5.25E+02	5.25E+02	5.25E+02
8.87E+01	8.87E+01	8.87E+01

1.45E+11	x	4.22E+01	+	–4.32E+09	x	5.25E+02	+	7.33E+09	x	8.87E+01		
–4.32E+09	x	4.22E+01	+	1.46E+10	x	5.25E+02	+	–2.13E+08	x	8.87E+01		
7.33E+09	x	4.22E+01	+	–2.13E+08	x	5.25E+02	+	1.20E+10	x	8.87E+01		

X = A^–1.b =

1.00E+00 / 4.95E+15	x	6.13E+12	+	–2.27E+12	+	6.50E+11						
		–1.82E+11	+	7.66E+12	+	–1.89E+10	=					
		3.09E+11	+	–1.12E+11	+	1.06E+12						

X = 1.00E+00 / 4.95E+15 x

4.51E+12	7.46E+12	1.26E+12

=

9.12E–04	
1.51E–03	
2.55E–04	

X =

dx	=	0.00091177
dy	=	0.00151069
dz	=	0.00025492

Control

10,154.00	dx	+	341,147.00	dy	+	(134.00)	dz	= 524.59
10154	x	0.0009117707	=	9.25811838				
341147	x	0.0015106861	=	515.366040				
–134	x	0.0002549231	=	–0.0341506				
				524.59	=	524.59		

def-h1

Project	: Medan Flood Control	Japan International Cooperation Agency (JICA)	Calculation sheet
Channel	: Percut River		Date
Structure	: Br. P-3		Nos of sheet
Station	: Pe 115 + 08		Prepared by

III.A.5.2 Normal condition
Case – II Low Water Level

Axx	dx	+	Axy	dy	+	Axz	dz	=	H
Ayx	dx	+	Ayy	dy	+	Ayz	dz	=	V
Azx	dx	+	Azy	dy	+	Azz	dz	=	M

35,467.00	dx	+	10,154.00	dy	+	(21,486.00)	dz	= 83.50 H
10,154.00	dx	+	341,147.00	dy	+	(134.00)	dz	= 594.76 V
(21,486.00)	dx	+	(134.00)	dy	+	425,747.00	dz	= 83.43 M

det A

3.547E+04	341147	−134
	−134	425747
10154	10154	−134
	−21486	425747
−21486	10154	341147
	−21486	−134

+	35467	x(	341147	x	425747	−	−134	x	−134	)		
	35467	x(	145242311808	−	−17956	)					=	5.15E+15
−	10154	x(	10154	x	425747	−	−21486	x	−134	)		
	10154	x(	4323035038	−	−2679124	)					=	−4.30E+13
+	−21486	x(	10154	x	−134	−	−21486	x	341147	)		
	−21486	x(	−1360636	−	7329884442	)					=	−1.57E+14
												4.95E+15

$$\frac{1}{\det} = \frac{1}{4.95E+15}$$

Kolector

a11	3.41E+05		−1.34E+02	+(	3.41E+05	x	4.26E+05	)−(−1.34E+02	x	−1.34E+02	)=	C11
	−1.34E+02		4.26E+05	+(	1.45E+11			)−(1.80E+04			)	=	1.45E+11
a12	1.02E+04		−1.34E+02	−(	1.02E+04	x	4.26E+05	)−(−2.15E+04	x	−1.34E+02	)=	C12
	−2.15E+04		4.26E+05	−(	4.32E+09			)−(2.86E+08			)	=	−4.32E+09
a13	1.02E+04		3.41E+05	+(	1.02E+04	x	−1.34E+02	)−(−2.15E+04	x	3.41E+05	)=	C13
	−2.15E+04		−1.34E+02	+(	−1.36E+08			)−(−7.33E+09			)	=	7.33E+09
a21	1.02E+04		−2.15E+04	−(	1.02E+04	x	4.26E+05	)−(−1.34E+02	x	−2.15E+04	)=	C21
	−1.34E+02		4.26E+05	−(	4.32E+09			)−(2.86E+08			)	=	−4.32E+09
a22	3.55E+04		−2.15E+04	+(	3.55E+04	x	4.26E+05	− −2.15E+04	x	−2.15E+04	)=	C22
	−2.15E+04		4.26E+05	+(	1.51E+10			− 4.82E+08			)	=	1.46E+10
a23	3.55E+04		1.02E+04	+(	3.55E+04	x	−1.34E+02	− −2.15E+04	x	1.02E+04	)=	C23
	−2.15E+04		−1.34E+02	+(	−4.75E+08			− −2.18E+08			)	=	−2.13E+08
a31	1.02E+04		−2.15E+04	+(	1.02E+04	x	−1.34E+02	− 3.41E+05	x	−2.15E+04	)=	C31
	3.41E+05		−1.34E+02	+(	−1.36E+08			− −7.33E+09			)	=	7.33E+09
a32	3.55E+04		−2.15E+04	−(	3.55E+04	x	−1.34E+02	− 1.02E+04	x	−2.15E+04	)=	C32
	1.02E+04		−1.34E+02	−(	−4.75E+08			− −2.18E+08			)	=	−2.13E+08
a33	3.55E+04		1.02E+04	+(	3.55E+04	x	3.41E+05	− 1.02E+04	x	1.02E+04	)=	C33
	1.02E+04		3.41E+05	+(	1.21E+10			− 1.03E+08			)	=	1.20E+10

C =

1.45E+11	−4.32E+09	7.33E+09
−4.32E+09	1.46E+10	−2.13E+08
7.33E+09	−2.13E+08	1.20E+10

Adj C = Ct =

1.45E+11	−4.32E+09	7.33E+09
−4.32E+09	1.46E+10	−2.13E+08
7.33E+09	−2.13E+08	1.20E+10

$$A^{-1} = \frac{\text{adj A}}{\det A} = \frac{1}{\det A} \times \begin{vmatrix} 1.45E+11 & -4.32E+09 & 7.33E+09 \\ -4.32E+09 & 1.46E+10 & -2.13E+08 \\ 7.33E+09 & -2.13E+08 & 1.20E+10 \end{vmatrix} = \begin{vmatrix} 8.35E+01 & 5.95E+02 & 8.34E+01 \\ 8.35E+01 & 5.95E+02 & 8.34E+01 \\ 8.35E+01 & 5.95E+02 & 8.34E+01 \end{vmatrix}$$

$$X = A^{-1}.b = \frac{1.00E+00}{4.95E+15} \times \begin{vmatrix} 1.21E+13 & -2.57E+12 & 8.11E+11 \\ -3.61E+11 & 8.71E+12 & -1.78E+10 \\ 6.12E+11 & -1.27E+11 & 1.00E+12 \end{vmatrix} =$$

$$X = \frac{1.00E+00}{4.95E+15} \times \begin{vmatrix} 1.02E+13 \\ 8.33E+12 \\ 1.46E+12 \end{vmatrix} = \begin{vmatrix} 2.05E-03 \\ 1.68E-03 \\ 3.00E-04 \end{vmatrix}$$

$$X = \begin{vmatrix} dx \\ dy \\ dz \end{vmatrix} = \begin{matrix} 0.00205449 \\ 0.00168238 \\ 0.00030017 \end{matrix}$$

Control

10,154.00	dx	+	341,147.00 dy	+	(134.00)dz	= 594.76
10154	x	0.0020544916	=	20.8613060		
341147	x	0.0016823801	=	573.938915		
−134	x	0.0003001742	=	−0.0402233		
				594.76	=	594.76

def-h2

Project	: Medan Flood Control	Japan International Cooperation Agency (JICA)	Calculation sheet
Channel	: Percut River		Date
Structure	: Br. P-3		Nos of sheet
Station	: Pe 115 + 08		Prepared by

III.A.5.3 Earthquake condition
Case – III High Water Level

Axx	dx	+	Axy	dy	+	Axz	dz	=	H
Ayx	dx	+	Ayy	dy	+	Ayz	dz	=	V
Azx	dx	+	Azy	dy	+	Azz	dz	=	M

31,821.00	dx	+	15,436.00	dy	+	(12,171.00)	dz	= 132.12 H
15,436.00	dx	+	496,301.00	dy	+	(884.00)	dz	= 524.59 V
(12,171.00)	dx	+	(884.00)	dy	+	584,848.00	dz	= (98.75) M

det A

3.182E+04	496301	−884
	−884	584848
15436	15436	−884
	−12171	584848
−12171	15436	496301
	−12171	−884

+	31821	x(	496301	x	584848	−	−884	x	−884	)		
	31821	x(	290261143548	−	−781456	)					=	9.18E+15
−	15436	x(	15436	x	584848	−	−12171	x	−884	)		
	15436	x(	9027729184	−	−10750164	)					=	−1.39E+14
+	−12171	x(	15436	x	−884	−	−12171	x	496301	)		
	−12171	x(	−13045424	−	8040479471	)					=	−7.34E+13
												8.97E+15

$$\frac{1}{\det} = \frac{1}{8.97E+15}$$

Kolector

a11	4.96E+05		−8.84E+02	+(	4.96E+05	x	5.85E+05	)−(−8.84E+02	x	−8.84E+02	)=	C11
	−8.84E+02		5.85E+05	+(	2.90E+11			)−(7.81E+05			)	=	2.90E+11
a12	1.54E+04		−8.84E+02	−(	1.54E+04	x	5.85E+05	)−(−1.22E+04	x	−8.84E+02	)=	C12
	−1.22E+04		5.85E+05	−(	9.03E+09			)−(1.06E+07			)	=	−8.02E+09
a13	1.54E+04		4.96E+05	+(	1.54E+04	x	−8.84E+02	)−(−1.22E+04	x	4.96E+05	)=	C13
	−1.22E+04		−8.84E+02	+(	−1.36E+07			)−(−8.04E+09			)	=	8.03E+09
a21	1.54E+04		−1.22E+04	−(	1.54E+04	x	5.85E+05	)−(−8.84E+02	x	−1.22E+04	)=	C21
	−8.84E+02		5.85E+05	−(	9.03E+09			)−(1.06E+07			)	=	−8.02E+09
a22	3.16E+04		−1.22E+04	+(	3.16E+04	x	5.85E+05	− −1.22E+04	x	−1.22E+04	)=	C22
	−1.22E+04		5.85E+05	+(	1.85E+10			− 1.49E+08			)	=	1.83E+10
a23	3.16E+04		1.54E+04	+(	3.16E+04	x	−8.84E+02	− −1.22E+04	x	1.54E+04	)=	C23
	−1.22E+04		−8.84E+02	+(	−2.80E+07			− −1.86E+08			)	=	−1.60E+08
a31	1.54E+04		−1.22E+04	+(	1.54E+04	x	−8.84E+02	− 4.96E+05	x	−1.22E+04	)=	C31
	4.96E+05		−8.84E+02	+(	−1.36E+07			− −6.04E+09			)	=	6.03E+09
a32	3.16E+04		−1.22E+04	−(	3.16E+04	x	−8.84E+02	− 1.54E+04	x	−1.22E+04	)=	C32
	1.54E+04		−8.84E+02	−(	−2.80E+07			− −1.86E+08			)	=	−1.60E+08
a33	3.16E+04		1.54E+04	+(	3.16E+04	x	4.96E+05	− 1.54E+04	x	1.54E+04	)=	C33
	1.54E+04		4.96E+05	+(	1.57E+10			− 2.36E+08			)	=	1.55E+10

C =

2.90E+11	−8.02E+09	6.03E+09
−8.02E+09	1.83E+10	−1.60E+08
6.03E+09	−1.60E+08	1.55E+10

Adj C = Ct =

2.90E+11	−8.02E+09	6.03E+09
−8.02E+09	1.83E+10	−1.60E+08
6.03E+09	−1.60E+08	1.55E+10

$$A^{-1} = \frac{\text{adj A}}{\det A} = \frac{1}{\det A} \times \begin{vmatrix} 2.90E+11 & -8.02E+09 & 6.03E+09 \\ -8.02E+09 & 1.83E+10 & -1.60E+08 \\ 6.03E+09 & -1.60E+08 & 1.55E+10 \end{vmatrix} = \begin{vmatrix} 1.32E+02 & 5.25E+02 & -8.68E+01 \\ 1.32E+02 & 5.25E+02 & -8.68E+01 \\ 1.32E+02 & 5.25E+02 & -8.68E+01 \end{vmatrix}$$

$$X = A^{-1}.b = \frac{1.00E+00}{8.97E+15} \times \begin{vmatrix} 3.83E+13 & -4.73E+12 & -5.83E+11 \\ -1.19E+12 & 9.62E+12 & 1.55E+10 \\ 7.96E+11 & -8.39E+10 & -1.50E+12 \end{vmatrix} =$$

$$X = \frac{1.00E+00}{8.97E+15} \times \begin{vmatrix} 3.30E+13 \\ 8.45E+12 \\ -7.83E+11 \end{vmatrix} = \begin{vmatrix} 3.68E-03 \\ 9.42E-04 \\ -8.73E-05 \end{vmatrix}$$

$$X = \begin{vmatrix} dx \\ dy \\ dz \end{vmatrix} = \begin{matrix} 0.00368468 \\ 0.00094224 \\ (0.00008732) \end{matrix}$$

Control

15,436.00	dx	+	496,301.00 dy	+	(884.00)dz	= 524.59
15436	x	0.0036846626	=	56.8784522		
496301	x	0.0009422434	=	467.636353		
−884	x	−0.0000873234	=	0.07719392		
				524.59	=	524.59

def-h3

Project	: Medan Flood Control	Japan International Cooperation Agency (JICA)	Calculation sheet
Channel	: Percut River		Date
Structure	: Br. P-3		Nos of sheet
Station	: Pe 115 + 06		Prepared by

III.A.5.4 Earthquake condition
Case – IV, High Water Level

Axx	dx	+	Axy	dy	+	Axz	dz	=	H
Ayx	dx	+	Ayy	dy	+	Ayz	dz	=	V
Azx	dx	+	Azy	dy	+	Azz	dz	=	M

31,621.00	dx	+	15,436.00	dy	+	(12,171.00)	dz	=	172.72 H
15,436.00	dx	+	496,301.00	dy	+	(884.00)	dz	=	594.76 V
(12,171.00)	dx	+	(884.00)	dy	+	584,849.00	dz	=	(92.84) M

det A

3.162E+04	496301	−884	=
	−884	584849	
15436	15436	−884	=
	−12171	584849	
−12171	15436	496301	=
	−12171	−884	

+	31621	x(	496301	x	584849	−	−884	x	−884	)	
	31621	x(	290261143549	−	−781456	)				=	9.18E+15
−	15436	x(	15436	x	584849	−	−12171	x	−884	)	
	15436	x(	9027729184	−	−10759184	)				=	−1.39E+14
+	−12171	x(	15436	x	−884	−	−12171	x	496301	)	
	−12171	x(	−13645424	−	6040479471	)				=	−7.34E+13
											8.97E+15

$$\frac{1}{\det} = \frac{1}{8.97E+15}$$

Kofactor

a11	4.98E+05	−8.84E+02	+(	4.98E+05	x	5.85E+05	)−(	−8.84E+02	x	−8.84E+02	)=	C11
	−8.84E+02	5.85E+05	+(	2.90E+11			)−(	7.81E+05	)		=	2.90E+11
a12	1.54E+04	−8.84E+02	−(	1.54E+04	x	5.85E+05	)−(	−1.22E+04	x	−8.84E+02	)=	C12
	−1.22E+04	5.85E+05	−(	9.03E+09			)−(	1.08E+07	)		=	−9.02E+09
a13	1.54E+04	4.98E+05	+(	1.54E+04	x	−8.84E+02	)−(	−1.22E+04	x	4.98E+05	)=	C13
	−1.22E+04	−8.84E+02	+(	−1.36E+07			)−(	−8.04E+09	)		=	8.03E+09
a21	1.54E+04	−1.22E+04	−(	1.54E+04	x	5.85E+05	)−(	−8.84E+02	x	−1.22E+04	)=	C21
	−8.84E+02	5.85E+05	−(	9.03E+09			)−(	1.08E+07	)		=	−9.02E+09
a22	3.16E+04	−1.22E+04	+(	3.16E+04	x	5.85E+05	−	−1.22E+04	x	−1.22E+04	)=	C22
	−1.22E+04	5.85E+05	+(	1.85E+10			−	1.48E+06	)		=	1.83E+10
a23	3.16E+04	1.54E+04	+(	3.16E+04	x	−8.84E+02	−	−1.22E+04	x	1.54E+04	)=	C23
	−1.22E+04	−8.84E+02	+(	−2.80E+07			−	−1.88E+06	)		=	−1.60E+08
a31	1.54E+04	−1.22E+04	+(	1.54E+04	x	−8.84E+02	−	4.98E+05	x	−1.22E+04	)=	C31
	4.98E+05	−8.84E+02	+(	−1.36E+07			−	−8.04E+09	)		=	8.03E+09
a32	3.16E+04	−1.22E+04	−(	3.16E+04	x	−8.84E+02	−	1.54E+04	x	−1.22E+04	)=	C32
	1.54E+04	−8.84E+02	−(	−2.80E+07			−	−1.88E+06	)		=	−1.60E+08
a33	3.16E+04	1.54E+04	+(	3.16E+04	x	4.98E+05	−	1.54E+04	x	1.54E+04	)=	C33
	1.54E+04	4.98E+05	+(	1.57E+10			−	2.38E+06	)		=	1.55E+10

C =

2.90E+11	−9.02E+09	8.03E+09
−9.02E+09	1.83E+10	−1.60E+08
8.03E+09	−1.60E+08	1.55E+10

Adj C = Ct =

2.90E+11	−9.02E+09	8.03E+09
−9.02E+09	1.83E+10	−1.60E+08
8.03E+09	−1.60E+08	1.55E+10

$$A^{-1} = \frac{\text{adj } A}{\det A} = \frac{t}{\det A} \times$$

2.90E+11	−9.02E+09	8.03E+09
−9.02E+09	1.83E+10	−1.60E+08
8.03E+09	−1.60E+08	1.55E+10

1.73E+02	5.95E+02	1.73E+02
1.73E+02	5.95E+02	−9.26E+01
1.73E+02	5.95E+02	−9.26E+01

$$X = A^{-1}.b = \frac{1.00E+00}{8.97E+15} \times$$

5.01E+13	−5.36E+12	−5.60E+11
−1.56E+12	1.09E+13	1.48E+10
1.04E+12	−9.51E+10	−1.43E+12

$$X = \frac{1.00E+00}{8.97E+15} \times$$

4.42E+13	4.93E−03
9.37E+12	1.04E−03
−4.89E+11	−5.45E−05

$$X = \begin{vmatrix} dx \\ dy \\ dz \end{vmatrix} = \begin{vmatrix} 0.00493111 \\ 0.00104492 \\ (0.00005454) \end{vmatrix}$$

Control

15,436.00	dx	+	496,301.00	dy	+	(884.00)	dz
15436	x	0.0049311141	=	76.1166767			
496301	x	0.0010449205	=	518.595108			
−884	x	−0.0000545435	=	0.04821643			
				594.78	=	594.76	

def-h4

Project	: Medan Flood Control	Japan International Cooperation Agency (JICA)	Calculation sheet
Channel	: Percut River		Date
Structure	: Br. P-3		Nos of sheet
Station	: Pe 115 + 06		Prepared by

III.A.6 Force at each pile head
III.A.6.1 Normal condition
Case – I,High Water Level

dxi = (dxi.cos e) − (dy + alpa.Xi).sin e)
dyi = (dxi.sin e) + (dy + alpa.Xi)cos e)

		Row of pile (1)	(2)	(3)	Total
	Side	L/s	C/l	R/s	
	sign	(−)	0	(+)	
	degree	< 0	0	> 0	
Xi	m	(1.25)	0.00	1.25	
n=nos pile/rows		6.00	6.00	6.00	
e	degree	0.00	0.00	5.71	
cos e	degree	1.000	1.000	0.995	
sin e	degree	0.000	0.000	0.099	
K1	t.m	1,914	1,914	1,914	
K2	t.m/rad	1,902	1,902	1,902	
K3	t.m/rad	1,902	1,902	1,902	
K4	t.m	3,782	3,782	3,782	
Kv	t.m	19,009	19,009	19,009	
dx	m	0.00091177	0.00091177	0.00091177	
dy	m	0.00151069	0.00151069	0.00151069	
alpa	rad	0.00025492	0.00025492	0.00025492	
dxi = dx cos e − (dy + alpa.Xi).sin e					
dx.cos e	=	0.00091	0.00091	0.00091	
dy	=	0.00151	0.00151	0.00151	
alpa	=	0.00025	0.00025	0.00025	
Alpa x Xi	=	(0.00032)	0.00000	0.00032	
dy + Alpa x Xi	=	0.00119	0.00151	0.00183	
(dy + alpa.Xi).sin e	=	0.00000	0.00000	0.00018	
dxi	=	0.00091	0.00091	0.00073	
dyi = dx sin e + (dy + alpa.Xi).cos e					
dx.sin e	=	0.0000000	0.0000000	0.0000907	
dy	=	0.0015107	0.0015107	0.0015107	
alpa	=	0.0002549	0.0002549	0.0002549	
Alpa x Xi	=	(0.0003187)	0.0000000	0.0003187	
dy + Alpa x Xi	=	0.0011920	0.0015107	0.0018293	
(dy + alpa.Xi).cos e	=	0.0011920	0.0015107	0.0018203	
dyi	=	0.0011920	0.0015107	0.0019110	
P ni=Kv.dyi		22.66	28.72	36.33	
K1.dxi	=	1.75	1.75	1.39	
K2.alpa	=	0.48	0.48	0.48	
P hi=K1.dxi−K2.alpa	=	1.26	1.26	0.90	
K3.dxi	=	1.73	1.73	1.38	
K4.alpa	=	0.96	0.96	0.96	
M ti=−K3.dxi+K4.alpa	=	(0.77)	(0.77)	(0.42)	
Mti x n	=	(4.62)	(4.62)	(2.49)	(11.73)
Vi = Pni.cos e − Phi.sin e					
Pni.cos	=	22.66	28.72	36.15	
Phi.sin e	=	0.00	0.00	0.09	
Vi	=	22.66	28.72	36.06	
Hi= Pni.sin e + Phi.cos e					
Pni.sin e	=	0.0	0.0	3.6	
Phi.cos e	=	1.3	1.3	0.9	
Hi	=	1.26	1.26	4.51	
Hi.n	=	7.56	7.56	27.08	42.20
Vi.n	=	135.96	172.30	216.33	524.59
Vi.n.X	=	(169.95)	0.00	270.42	100.47
Mti.n	=	(4.62)	(4.62)	(2.49)	(11.73)
Mt=Mti.n + Vi.n.X	=	(174.57)	(4.62)	267.93	88.74

Total forces at footing of Abutment			Total forces at pile head		
Ho	=	42.20 ton	Hi.n = Ho	=	42.20
Vo	=	524.59 ton	Vi.n = Vo	=	524.59
Mo	=	88.74 ton.m	Mt = Mo	=	88.74

mvh−1

Project : Medan Flood Control	Japan International Cooperation Agency (JICA)	Calculation sheet	
Channel : Percut River		Date	
Structure : Br. P-3		Nos of sheet	
Station : Pe 115 + 06		Prepared by	

III.A.6.2 Normal condition
Case – II,Low Water Level

dxi = (dxi.cos ø) – (dy + alpa.Xi).sin ø)
dyi = (dxi.sin ø) + (dy + alpa.Xi)cos ø)

			Row of pile (1)	(2)	(3)	Total
		Side	L/s	C/l	R/s	
		sign	(–)	0	(+)	
		degree	< 0	0	> 0	
Xi	m		(1.25)	0.00	1.25	
n=nos pile/rows			6.00	6.00	6.00	
ø	degree		0.00	0.00	5.71	
cos ø	degree		1.000	1.000	0.995	
sin ø	degree		0.000	0.000	0.099	
K1	t.m		1,914	1,914	1,914	
K2	t.m/rad		1,902	1,902	1,902	
K3	t.m/rad		1,902	1,902	1,902	
K4	t.m		3,782	3,782	3,782	
Kv	t.m		19,009	19,009	19,009	
dx	m		0.00205449	0.00205449	0.00205449	
dy	m		0.00168238	0.00168238	0.00168238	
alpa	rad		0.00030017	0.00030017	0.00030017	
dxi = dx cos ø – (dy + alpa.Xi).sin ø						
dx.cos ø	=		0.00205	0.00205	0.00204	
dy	=		0.00168	0.00168	0.00168	
alpa	=		0.00030	0.00030	0.00030	
Alpa x Xi	=		(0.00038)	0.00000	0.00038	
dy + Alpa x Xi	=		0.00131	0.00168	0.00206	
(dy + alpa.Xi).sin ø	=		0.00000	0.00000	0.00020	
dxi	=		0.00205	0.00205	0.00184	
dyi = dx sin ø + (dy + alpa.Xi).cos ø						
dx.sin ø	=		0.0000000	0.0000000	0.0002044	
dy	=		0.0016824	0.0016824	0.0016824	
alpa	=		0.0003002	0.0003002	0.0003002	
Alpa x Xi	=		(0.0003752)	0.0000000	0.0003752	
dy + Alpa x Xi	=		0.0013072	0.0016824	0.0020576	
(dy + alpa.Xi).cos ø	=		0.0013072	0.0016824	0.0020474	
dyi	=		0.0013072	0.0016824	0.0022518	
P ni=Kv.dyi			24.85	31.98	42.80	
K1.dxi	=		3.93	3.93	3.52	
K2.alpa	=		0.57	0.57	0.57	
P hi=K1.dxi–K2.alpa	=		3.36	3.36	2.95	
K3.dxi	=		3.91	3.91	3.50	
K4.alpa	=		1.14	1.14	1.14	
M ti=–K3.dxi+K4.alpa	=		(2.77)	(2.77)	(2.36)	
Mti x n	=		(16.63)	(16.63)	(14.18)	(47.45)
Vi = Pni.cos ø – Phi.sin ø						
Pni.cos	=		24.85	31.98	42.59	
Phi.sin ø	=		0.00	0.00	0.29	
Vi	=		24.85	31.98	42.30	
Hi= Pni.sin ø + Phi.cos ø						
Pni.sin ø	=		0.0	0.0	4.3	
Phi.cos ø	=		3.4	3.4	2.9	
Hi	=		3.36	3.36	7.19	
Hi.n	=		20.17	20.17	43.16	83.50
Vi.n	=		149.09	191.88	253.79	594.76
Vi.n.X	=		(186.36)	0.00	317.24	130.88
Mti.n	=		(16.63)	(16.63)	(14.18)	(47.45)
Mt=Mti.n + Vi.n.X	=		(202.99)	(16.63)	303.06	83.43

Total forces at footing of Abutment			Total forces at pile head		
Ho	=	83.50 ton	Hi.n = Ho	=	83.50
Vo	=	594.76 ton	Vi.n = Vo	=	594.76
Mo	=	83.43 ton.m	Mt = Mo	=	83.43

mvh–2

Project : Medan Flood Control	Japan International Cooperation Agency (JICA)	Calculation sheet	
Channel : Percut River		Date	
Structure : Br. P-3		Nos of sheet	
Station : Pe 115 + 06		Prepared by	

III.A.6.3 Earthquake condition
Case – III , High Water Level

dxi = (dxi.cos ø) – (dy + alpa.Xi).sin ø)
dyi = (dxi.sin ø) + (dy + alpa.Xi)cos ø)

			Row of pile (1)	(2)	(3)	Total
		Side	L/s	C/l	R/s	
		sign	(–)	0	(+)	
		degree	< 0	0	> 0	
Xi	m		(1.25)	0.00	1.25	
n=nos pile/rows			6.00	6.00	6.00	
ø	degree		0.00	0.00	5.71	
cos ø	degree		1.000	1.000	0.995	
sin ø	degree		0.000	0.000	0.099	
K1	t.m		1,671	1,671	1,671	
K2	t.m/rad		1,751	1,751	1,751	
K3	t.m/rad		1,751	1,751	1,751	
K4	t.m		3,670	3,670	3,670	
Kv	t.m		27,658	27,658	27,658	
dx	m		0.00368466	0.00368466	0.00368466	
dy	m		0.00094224	0.00094224	0.00094224	
alpa	rad		(0.00008732)	(0.00008732)	(0.00008732)	
dxi = dx cos ø – (dy + alpa.Xi).sin ø						
dx.cos ø	=		0.00368	0.00368	0.00367	
dy	=		0.00094	0.00094	0.00094	
alpa	=		(0.00009)	(0.00009)	(0.00009)	
Alpa x Xi	=		0.00011	0.00000	(0.00011)	
dy + Alpa x Xi	=		0.00105	0.00094	0.00083	
(dy + alpa.Xi).sin ø	=		0.00000	0.00000	0.00008	
dxi	=		0.00368	0.00368	0.00358	
dyi = dx sin ø + (dy + alpa.Xi).cos ø						
dx.sin ø	=		0.0000000	0.0000000	0.0003666	
dy	=		0.0009422	0.0009422	0.0009422	
alpa	=		(0.0000873)	(0.0000873)	(0.0000873)	
Alpa x Xi	=		0.0001092	0.0000000	(0.0001092)	
dy + Alpa x Xi	=		0.0010514	0.0009422	0.0008331	
(dy + alpa.Xi).cos ø	=		0.0010514	0.0009422	0.0008290	
dyi	=		0.0010514	0.0009422	0.0011956	
P ni=Kv.dyi			29.08	26.06	33.07	
K1.dxi	=		6.16	6.16	5.99	
K2.alpa	=		(0.15)	(0.15)	(0.15)	
P hi=K1.dxi–K2.alpa	=		6.31	6.31	6.14	
K3.dxi	=		6.45	6.45	6.27	
K4.alpa	=		(0.32)	(0.32)	(0.32)	
M ti=–K3.dxi+K4.alpa	=		(6.77)	(6.77)	(6.60)	
Mti x n	=		(40.63)	(40.63)	(39.57)	(120.84)
Vi = Pni.cos ø – Phi.sin ø						
Pni.cos	=		29.08	26.06	32.90	
Phi.sin ø	=		0.00	0.00	0.61	
Vi	=		29.08	26.06	32.29	
Hi= Pni.sin ø + Phi.cos ø						
Pni.sin ø	=		0.0	0.0	3.3	
Phi.cos ø	=		6.3	6.3	6.1	
Hi	=		6.31	6.31	9.40	
Hi.n	=		37.86	37.86	56.40	132.12
Vi.n	=		174.48	156.36	193.75	524.59
Vi.n.X	=		(218.10)	0.00	242.19	24.09
Mti.n	=		(40.63)	(40.63)	(39.57)	(120.84)
Mt=Mti.n + Vi.n.X	=		(258.73)	(40.63)	202.62	(96.75)

Total forces at footing of Abutment			Total forces at pile head		
Ho	=	132.12 ton	Hi.n = Ho	=	132.12
Vo	=	524.59 ton	Vi.n = Vo	=	524.59
Mo	=	(96.75)ton.m	Mt = Mo	=	(96.75)

mvh–3

Project	: Medan Flood Control	Japan International Cooperation Agency (JICA)	Calculation sheet	
Channel	: Percut River		Date	
Structure	: Br. P-3		Nos of sheet	
Station	: Pe 115 + 06		Prepared by	

III.A.6.4 Earthquake condition
Case – IV , Low Water Level

dxi = (dxi.cos e) – (dy + alpa.Xi).sin e)
dyi = (dxi.sin e) + (dy + alpa.Xi)cos e)

			Row of pile (1)	(2)	(3)	Total
		Side	L/s	C/l	R/s	
		sign	(–)	0	(+)	
		degree	< 0	0	> 0	
Xi	m		(1.25)	0.00	1.25	
n=nos pile/rows			6.00	6.00	6.00	
e	degree		0.00	0.00	5.71	
cos e	degree		1.000	1.000	0.995	
sin e	degree		0.000	0.000	0.099	
K1	t.m		1,671	1,671	1,671	
K2	t.m/rad		1,751	1,751	1,751	
K3	t.m/rad		1,751	1,751	1,751	
K4	t.m		3,670	3,670	3,670	
Kv	t.m		27,658	27,658	27,658	
dx	m		0.00493111	0.00493111	0.00493111	
dy	m		0.00104492	0.00104492	0.00104492	
alpa	rad		(0.00005454)	(0.00005454)	(0.00005454)	
dxi = dx cos e – (dy + alpa.Xi).sin e						
dx.cos e	=		0.00493	0.00493	0.00491	
dy	=		0.00104	0.00104	0.00104	
alpa	=		(0.00005)	(0.00005)	(0.00005)	
Alpa x Xi	=		0.00007	0.00000	(0.00007)	
dy + Alpa x Xi	=		0.00111	0.00104	0.00098	
(dy + alpa.Xi).sin e	=		0.00000	0.00000	0.00010	
dxi	=		0.00493	0.00493	0.00481	
dyi = dx sin e + (dy + alpa.Xi).cos e						
dx.sin e	=		0.0000000	0.0000000	0.0004906	
dy	=		0.0010449	0.0010449	0.0010449	
alpa	=		(0.0000545)	(0.0000545)	(0.0000545)	
Alpa x Xi	=		0.0000682	0.0000000	(0.0000682)	
dy + Alpa x Xi	=		0.0011131	0.0010449	0.0009767	
(dy + alpa.Xi).cos e	=		0.0011131	0.0010449	0.0009719	
dyi	=		0.0011131	0.0010449	0.0014625	
P ni=Kv.dyi			30.79	28.90	40.45	
K1.dxi	=		8.24	8.24	8.04	
K2.alpa	=		(0.10)	(0.10)	(0.10)	
P hi=K1.dxi–K2.alpa	=		8.34	8.34	8.13	
K3.dxi	=		8.63	8.63	8.42	
K4.alpa	=		(0.20)	(0.20)	(0.20)	
M ti=–K3.dxi+K4.alpa	=		(8.83)	(8.83)	(8.62)	
Mti x n	=		(53.01)	(53.01)	(51.73)	(157.74)
Vi = Pni.cos e – Phi.sin e						
Pni.cos	=		30.79	28.90	40.25	
Phi.sin e	=		0.00	0.00	0.81	
Vi	=		30.79	28.90	39.44	
Hi= Pni.sin e + Phi.cos e						
Pni.sin e	=		0.0	0.0	4.0	
Phi.cos e	=		8.3	8.3	8.1	
Hi	=		8.34	8.34	12.12	
Hi.n	=		50.01	50.01	72.70	172.72
Vi.n	=		184.72	173.40	236.64	594.76
Vi.n.X	=		(230.89)	0.00	295.80	64.91
Mti.n	=		(53.01)	(53.01)	(51.73)	(157.74)
Mt=Mti.n + Vi.n.X	=		(283.90)	(53.01)	244.07	(92.84)

Total forces at footing of Abutment			Total forces at pile head		
Ho	=	172.72 ton	Hi.n = Ho	=	172.72
Vo	=	594.76 ton	Vi.n = Vo	=	594.76
Mo	=	(92.84)ton.m	Mt = Mo	=	(92.84)

mvh–4

Project	: Medan Flood Control	Japan International Cooperation Agency (JICA)	Calculation sheet	
Channel	: Percut River		Date	
Structure	: Br. P 3		Nos of sheet	
Station	: Pe 115 + 06		Prepared by	

III.A.7 Control stresses on pile
III.A.7.1 Normal Condition
Case – II Low Water Level

Steel pipe pile dia.400 mm
Depth embedded of pile = 28.00 m

Axial load Vi = 42.300 ton = 42,300 kg

Moment Mi = 2.360 t.m = 236,000 kg.cm

diameter do = 40.00 cm
outer radius ro = 20.00 cm

M' = Mx + Vi x ro
= 236,000 + 42,300 x 20.00
= 236,000 + 846,000
= 1,082,000 kg.cm

excentrisitas $e = \frac{Mx}{Vi} = \frac{236,000 \text{ kg.cm}}{42,300 \text{ kg}} = 5.58 \text{ cm}$

concrete covering a' = 2.50 cm
t = 1.03 cm

Inner diameter di = 40.00 – 2.06 = 37.94

inner radius ri = 18.97 cm

ro^2 = 400.00
ri^2 = 359.86
ro^2–ri^2 = 400.00 – 359.86 = 40.14 cm2

area of steel bar
As = 8 ø 16 – – Ø 16
8.00 x 2.0106 = 16.08 cm2

As = 16.08 cm2

$Ys = \frac{\text{Area of bar.Y bar}}{\text{Area of bar}} = \frac{16.08 \times 18.97}{16.08} = \frac{305.13}{16.08} = 18.97 \text{ cm}$

$n = \frac{1,897,200}{257,495} = 7.37$

$p = \frac{\text{toLA rea of steel bar}}{@pi.ro^2} = \frac{16.08}{3.14 \times 400.00} = \frac{16.08}{1,256.64}$

teg–n

p	=	0.01280							
n.p	=	7.37	x	0.01280					
	=	1.54810							
alpa	=	ri / ro	=	18.97 / 20.00	=	0.95			
e	=	5.58 cm							
e		5.58							
e / ro	=	5.58 / 20.00	=	0.2790					
ro									

$$\frac{e}{ro} = \frac{pi/4 - (5/12 - 1/6.\cos^2 pi)\sin pi.\cos pi + (n.@pi.p)/2.(ri/ro)^2}{\sin pi/3.(2 + \cos^2 pi) - pi.\cos pi - n.@pi.p \cos pi}$$

trial value of pi ---->>>>

pi	=	152.1261 degree	
pi	=	2.6551 rad.	

e = pi/4 − (5/12 − 1/6.cos^2 pi)sin pi.cos pi + (n.@pi.p)/2.(alpa)^2

pi/4 = A	=	2.6551	:	4.00	=	0.66		
n	=	7.37						
alpa	=	0.95 cm						
alpa^2	=	0.90 cm^2						
cos pi	=	(0.883979)						
Sin pi	=	0.467527						
Cos^2 pi	=	0.781418						
1/6.cos^2 pi	=	0.166667	x	0.781418	=	0.13024		
(5/12 − 1/6.cos^2 pi)	=	0.416667	−	0.130236	=	0.286430		
Sin pi cos pi	=	0.467527	x	(0.883979)	=	(0.41)		
(5/12 − 1/6.cos^2 pi) x sin pi.cos pi = B	=	0.28643	x	(0.88398)			=	(0.25320)
(n.@pi.p)	=	1.55	x	3.14	=	4.86		
(n.@pi.p)/2	=	4.86	:	2.00	=	2.43		
(n.@pi.p)/2 x (alpa)^2 = C	=	2.43	x	0.90			=	2.19
sum A − B + C	=	0.66	−	(0.25)	+	2.19	=	3.10

ro = sin pi/3.(2 + cos^2 pi)−pi.cos pi − n.@pi.p cos pi

(Sin pi)/3	=	0.156						
(2 + cos^2 pi)	=	2.000	+	0.781	=	2.781		
sin ø /3 x (2 + cos^2 pi)	=	0.156	x	2.781			=	0.433
pi.cos pi	=	2.655	x	(0.884)			=	(2.347)
n.@pi.p	=	1.548	x	3.142	=	4.864		
n.@pi.p cos pi	=	4.864	x	(0.884)	=	(4.299)		
					=	7.080		

e		3.10						
e / ro	=	3.10 / 7.08						
ro								
pi	=	152.13 rad						
e / ro	=	0.4385		e / ro	=	0.2790		

$$C = \frac{1 - \cos pi}{2\sin^3 pi/3 - pi\cos pi + \sin pi\cos^2 pi + pi/4 - \sin pi.\cos pi/4 - \sin^3 pi.\cos pi/6 \;@pi.np.(alpa^2/2 - \cos pi)}$$

Cos pi	=	(0.884)						
sin pi	=	0.468						
sin^3 pi	=	0.102						
sin pi.cos pi	=	0.468	x	(0.884)	=	(0.413)		
Cos^2pi	=	0.781						
1 − cos pi	=	1.000	−	(0.884)	=	1.884		
2.sin^3 pi	=	2.000	x	0.102	=	0.204		
2.sin^3 pi/3 = A	=	0.204	:	3.000			=	0.068
pi.cos pi = B	=	2.655	x	(0.884)			=	(2.347)

sin pi.cos^2 pi = C	=	0.468	x	0.781			=	0.365
pi/4 = D	=	0.664					=	0.664
Cos pi/4	=	(0.884)	:	4.000	=	(0.221)		
sin pi.cos pi/4 = E	=	0.468	x	(0.221)			=	(0.103)
(sin^3 pi.cos pi)	=	0.102	x	(0.884)	=	(0.090)		
(sin^3 pi.cos pi)/6 = F	=	(0.090)	:	6.000			=	(0.015)
n.p	=	1.548						
@pi.np	=	3.142	x	1.548	=	4.864		
alpa	=	0.948						
alpa^2	=	0.900						
alpa^2/2	=	0.900	:	2.000	=	0.450		
alpa^2/2−cos pi	=	0.450	−	(0.884)	=	1.334		
@pi.np x alpa^2/2	=	4.864	x	0.450	=	2.188		
@pi.np x alpa^2/2−cos ø = G	=	2.188	−	(0.884)			=	3.072
sum = A − B + C + D − E − F + G							=	6.634

$$C = \frac{1 - \cos pi}{2\sin^3 pi/3 - pi\cos pi + \sin pi\cos^2 pi + pi/4 - \sin pi.\cos pi/4 - \sin^3 pi.\cos pi/6 \;@pi.np.(alpa^2/2 - \cos pi)}$$

$$C = \frac{1.883979}{6.634} = 0.28397$$

$$S = C \times \frac{alpa + \cos pi}{1 - \cos pi}$$

$$= 0.284 \times \frac{0.948 + (0.884)}{1.884}$$

$$= 0.284 \times 0.034$$

$$= 0.010$$

M'	=	1,082,000	kg.cm
ro	=	20.000	cm

stres on concrete = fc

$$fc = \frac{M'}{ro^3} \times C$$

$$= \frac{1,082,000}{8,000} \times 0.284$$

$$= 135.250 \times 0.284$$

$$= 38.41 \text{ kg/cm2} > 70 \text{ kg/cm2}$$

stres on steel = fs

$$fs = \frac{M'}{ro^3} \times S \times n$$

$$= \frac{1,082,000}{8,000} \times 0.010 \times 7 \text{ kg/cm2}$$

$$= 135.250 \times 0.010 \times 7 \text{ kg/cm2}$$

$$= 10 \text{ kg/cm2}$$

Project	: Medan Flood Control	Japan International Cooperation Agency (JICA)	Calculation sheet
Channel	: Percut River		Date
Structure	: Br. P 3		Nos of sheet
Station	: Pe 115 + 06		Prepared by

III.A.7 Control stresses on pile
III.A.7.2 Earthquake Condition
Case – II Low Water Level

Steel pipe pile dia.400 mm
Depth embedded of pile = 28.00 m

Axial load Vi = 51.730 ton = 51,730 kg

Moment Mi = 8.620 t.m = 862,000 kg.cm

diameter do = 40.00 cm
outer radius ro = 20.00 cm

M' = Mx + Vi x ro
= 862,000 + 51,730 x 20.00
= 862,000 + 1,034,600
= 1,896,600 kg.cm

$$e = \frac{Mx}{Vi} = \frac{862{,}000 \text{ kg.cm}}{51{,}730 \text{ kg}} = 16.66 \text{ cm}$$

concrete covering a' = 2.50 cm
t = 1.03 cm

Inner diameter di = 40.00 – 2.06
= 37.94

inner radius ri = 18.97 cm

ro^2 = 400.00
ri^2 = 359.86
ro^2–ri^2 = 400.00 – 359.86
ro^2–ri^2 = 40.14 cm2

area of steel bar
As = 8 ø 16 --Ø 16
8.00 x 2.0106 = 16.08 cm2
As = 16.08 cm2

$$Ys = \frac{\text{Area of bar.Y bar}}{\text{Area of bar}} = \frac{16.08 \times 18.97}{16.08} = \frac{305.13}{16.08} = 18.97 \text{ cm}$$

$$n = \frac{1{,}897{,}200}{257{,}495} = 7.37$$

$$p = \frac{\text{tot.A rea of steel bar}}{@pi.ro^2} = \frac{16.08}{3.14 \times 400.00} = \frac{16.08}{1{,}256.64}$$

$$p = \frac{16.08}{1{,}256.64} = 0.01280$$

$$n.p = 7.37 \times 0.01280 = 1.54810$$

$$alpa = \frac{ri}{ro} = \frac{18.97}{20.00} = 0.95$$

$$e = 16.66 \text{ cm}$$

$$\frac{e}{ro} = \frac{16.66}{20.00} = 0.8332$$

$$\frac{e}{ro} = \frac{pi/4 - (5/12 - 1/6.\cos^2 pi)\sin pi.\cos pi + (n.@pi.p)/2.(ri/ro)^2}{\sin pi/3.(2 + \cos^2 pi) - pi.\cos pi - n.@pi.p \cos pi}$$

trial value of pi --->>>> pi = 113.1261 degree
pi = 1.9744 rad.

e = pi/4 – (5/12 – 1/6.cos^2 pi)sin pi.cos pi + (n.@pi.p)/2.(alpa)^2

pi/4 = A	=	1.9744	:	4.00 =	0.49
n	=	7.37			
alpa	=	0.95 cm			
alpa^2	=	0.90 cm^2			
cos pi	=	(0.392756)			
Sin pi	=	0.919643			
Cos^2 pi	=	0.154257			
1/6.cos^2 pi	=	0.166667	x	0.154257 =	0.02571
(5/12 – 1/6.cos^2 pi)	=	0.416667	–	0.025710 =	0.390957
Sin pi cos pi	=	0.919643	x	(0.392756) =	(0.36)
(5/12 – 1/6.cos^2 pi) x sin pi.cos pi = B	=	0.39096	x	(0.39276)	= (0.15355)
(n.@pi.p)	=	1.55	x	3.14 =	4.86
(n.@pi.p)/2	=	4.86	:	2.00 =	2.43
(n.@pi.p)/2 x (alpa)^2 = C	=	2.43	x	0.90	= 2.19
sum A – B + C	=	0.49	–	(0.15) +	2.19 = 2.83

ro = sin pi/3.(2 + cos^2 pi)–pi.cos pi – n.@pi.p cos pi

(Sin pi)/3	=	0.307			
(2 + cos^2 pi)	=	2.000	+	0.154 =	2.154
sin ø/3 x (2 + cos^2 pi)	=	0.307	x	2.154	= 0.660
pi.cos pi	=	1.974	x	(0.393)	= (0.775)
n.@pi.p	=	1.548	x	3.142 =	4.864
n.@pi.p cos pi	=	4.864	x	(0.393) =	(1.910)
				=	3.346

$$\frac{e}{ro} = \frac{2.83}{3.35} = 0.8472$$

pi = 113.13 rad

$$\frac{e}{ro} = 0.8472 \qquad \frac{e}{ro} = 0.8332$$

$$C = \frac{1 - \cos pi}{2\sin^3 pi/3 - pi\cos pi + \sin pi\cos^2 pi + pi/4 - \sin pi.\cos pi/4 - \sin^3 pi.\cos pi/6 \; @pi.np.(alpa^2/2 - \cos pi)}$$

Cos pi	=	(0.393)			
sin pi	=	0.920			
sin^3 pi	=	0.778			
sin pi.cos pi	=	0.920	x	(0.393) =	(0.361)
Cos ^ 2pi	=	0.154			
1 – cos pi	=	1.000	–	(0.393) =	1.393
2.sin^3 pi	=	2.000	x	0.778 =	1.556
2.sin^3 pi/3 = A	=	1.556	:	3.000	= 0.519
pi.cos pi = B	=	1.974	x	(0.393)	= (0.775)

teg-q

sin pi.cos^2 pi = C	=	0.920	x	0.154		=	0.142	
pi/4 = D	=	0.494				=	0.494	
Cos pi/4	=	(0.393)	:	4.000	=	(0.098)		
sin pi.cos pi/4 = E	=	0.920	x	(0.098)		=	(0.090)	
(sin^3 pi.cos pi)	=	0.778	x	(0.393)	=	(0.305)		
(sin^3 pi.cos pi)/6 = F	=	(0.305)	:	6.000		=	(0.051)	
n.p	=	1.548						
@pi.np	=	3.142	x	1.548	=	4.864		
alpa	=	0.948						
alpa^2	=	0.900						
alpa^2/2	=	0.900	:	2.000	=	0.450		
alpa^2/2−cos pi	=	0.450	−	(0.393)	=	0.843		
@pi.np x alpa^2/2	=	4.864	x	0.450	=	2.188		
@pi.np x alpa^2/2−cos ø = G	=	2.188	−	(0.393)		=	2.580	
sum = A − B + C + D − E − F + G						=	4.651	

$$C = \frac{1 - \cos pi}{2\sin^3 pi/3 - pi\cos pi + \sin pi\cos^2 pi + pi/4 - \sin pi.\cos pi/4 - \sin^3 pi.\cos pi/6 \; @pi.np.(alpa^2/2 - \cos pi)}$$

$$C = \frac{1.392756}{4.651} = 0.29944$$

$$S = C \times \frac{alpa + \cos pi}{1 - \cos pi}$$

$$= 0.299 \times \frac{0.948 + (0.393)}{1.393}$$

$$= 0.299 \times 0.399$$

$$= 0.119$$

M' = 1,896,600 kg.cm

ro = 20.000 cm

stres on concrete = fc

$$fc = \frac{M'}{ro^3} \times C$$

$$= \frac{1,896,600}{8,000} \times 0.299$$

$$= 237.075 \times 0.299$$

$$= 70.99 \text{ kg/cm2} > 70 \text{ kg/cm2}$$

stres on steel = fs

$$fs = \frac{M'}{ro^3} \times S \times n$$

$$= \frac{1,896,600}{8,000} \times 0.119 \times 7 \text{ kg/cm2}$$

$$= 237.075 \times 0.119 \times 7 \text{ kg/cm2}$$

$$= 209 \text{ kg/cm2}$$

Project : Medan Flood Control	Japan International Cooperation Agency (JICA)	Calculation sheet
Channel : Percut River		Date
Structure : Br. P−3		Nos of sheet
Station : Pe 115 + 06		Prepared by

III.A.8 Combined load at Abutment section

III.A.8.1 Normal Condition

Case − I, High Water Level

Ka	=	0.297		Ywet	=	1.850	t/m3
Ht	=	6.000	m	Ysat	=	2.000	t/m3
Yw	=	1.000	t/m3	q	=	1.000	t/m2
Yc	=	2.400	t/m3				

Description	Total load (ton) Dead load	Line load	Uniform load	Pedestrian load	Total load	Nos of bearing	Width
Left side span	203.09	27.27	99.20	9.60	339.16	2.00	10.00
load per m wid	10.155	1.364	4.960	0.480	16.958		

Section 1 − 1 H1 = 1.245 m W1 = 0.300 m

Load		Description Y (m)	x	Hn (m)	x	Wn (t/m3)	=	Weight (ton)	Vo (ton)	Ho (ton)	Xo (m)	Yo (m)	M = Vo.Yo (m)
C1	=	2.40	x	1.245	x	0.30	=	0.896	0.896				
		q	x	H									
Pq	=	1.00	x	1.245			=	1.245		1.245		0.623	0.775
Pa1		0.5 x	Y	x	H1^2	x	Ka						
	=	0.5 x	1.85	x	1.55	x	0.297	=	0.426		0.426		0.415	
total									0.896	1.671			0.775

Section 2 − 2

H1 = 1.245 m W1 = 0.30 m

H4 = 0.500 m W4 = 0.55 m

H5 = 0.250 m W5 = 0.55 m

Load		Description Yc (m)	x	H (m)	x	W (t/m3)	=	Weight (ton)	Vo (ton)	Ho (ton)	Xo (m)	Yo (m)	M = Vo.Yo (t.m)
C1	=	2.40	x	1.245	x	0.30	=	0.896	0.896		0.150		0.134
C4	=	2.40	x	0.500	x	0.55	=	0.660	0.660		0.275		0.182
C5	= 0.5 x	2.40	x	0.500	x	0.55	=	0.330	0.330		0.275		0.091
E1	=	q	x	H	x	W							
	=	1.00	x	1.245	x	0.25	=	0.311	0.311		0.275		0.086
total									2.198				0.492

Section 3 − 3

H1	=	1.245	m	W1	=	0.300	m	H1 + H4 + H5	=	2.245	m
H2	=	1.000	m	W2	=	1.000	m	Pe	=	3.929	ton (by earthquake)
H4	=	0.500	m	W4	=	0.550	m	He=H4+H5	=	1.000	m
H5	=	0.500	m	W5	=	0.550	m				
H6	=	0.500	m	W6	=	0.200	m				
H7	=	0.250	m	W7	=	0.200	m				

Load		Description W		Y	x	H	x	W	=	Weight	Vo	Ho	Xo	Yo	M
				m		m		t/m3		ton	ton	ton	m	m	t.m
C1	=			2.40	x	1.245	x	0.30	=	0.896	0.896				
C4	=			2.40	x	0.500	x	1.00	=	1.200	1.200				
C5	=	0.5	x	2.40	x	0.500	x	0.55	=	0.330	0.330				
C2	=			2.40	x	1.000	x	0.55	=	1.320	1.320				
C6	=			2.40	x	0.500	x	0.20	=	0.240	0.240				
C7	=	0.5	x	2.40	x	0.250	x	0.20	=	0.060	0.060				
Pe									=	3.929		3.929		1.00	3.929
Pq	=			1.00	x	2.245	x	0.20	=	0.449		0.449		1.123	0.504
Pa	=	0.5	x	1.85	x	2.245	x	0.297	=	0.617		0.617		0.748	0.462
Rv	=									16.958	16.958				
			sum								21.004	4.995			4.895

Section 4 – 4

Top deck e	=	13.488	m				
Hwt elv.	=	10.543	m				
Hwc elv.	=	9.843	m				
H back fill	=	Ht	–	H3			
	=	6.00	–	1.00	=	5.00	m
Top footin	=	13.488	–	5.000	=	8.488	m
H wet soil	=	13.488	–	10.543	=	2.945	m
H sat soil	=	5.00	–	2.945	=	2.055	m

H1	=	1.245	m	W1	=	0.300 m
H2	=	3.755	m	W2	=	1.000 m
H4	=	0.500	m	W4	=	0.550 m
H5	=	0.500	m	W5	=	0.550 m
H6	=	0.500	m	W6	=	0.200 m
H7	=	0.250	m	W7	=	0.200 m

H wet = 2.945 : 3 + 2.055 = 3.037 m

Load		Description Y	x	Hn	x	Wn	Weight	Vo	Ho	Xo	Yo	M = Ho.Yo
		m		m		m	ton	ton	ton	m	m	t.m
C1	=	2.40	x	1.25	x	0.30 =	0.896	0.896				
C4	=	2.40	x	0.50	x	1.00 =	1.200	1.200				
C5	= 0.5 x	2.40	x	0.50	x	0.55 =	0.330	0.330				
C2	=	2.40	x	3.76	x	0.55 =	4.957	4.957				
C6	=	2.40	x	0.50	x	0.20 =	0.240	0.240				
C7	= 0.5 x	2.40	x	0.25	x	0.20 =	0.060	0.060				
Pe						=	3.929		3.929		3.755	14.753
Pq1	=	1.00	x	5.00	x	1.00 =	5.000		5.000		2.500	12.500
Pw1	= 0.5 x	1.85	x	8.673	x	0.297 =	2.383		2.383		6.551	15.609
Ps1	= 0.5 x	2.00	x	4.223	x	0.297 =	1.254		1.254		0.685	0.859
Ps2		2.00	x	2.055	x	0.297 =	1.221		1.221		1.027	1.254
Pwl	= 0.5 x	1.00	x	5.546	x	1.00 =	2.773		2.773		0.785	2.177
Pwr	= 0.5 x	1.00	x	4.223	x	1.00 =	(2.112)		(2.112)		0.685	(1.446)
Rv	=						16.958	16.958				
	sum							24.641	14.448			45.706

Section 5 – 5

H 5.1.r	=	0.300	m	W1	=	1.20 m
H 5.2.r	=	1.000	m	W2	=	1.20 m
H wet.r	=	2.945	–	1.245	=	1.70 m
H sat.r	=	2.055	m			

mqh-1

Load		Description Y	x	H	x	W	=	Weight	Vo	Ho	Xo	Yo	M = Vo.Xo
		m		m		t/m3		ton	ton	ton	m	m	t.m
C1	= 0.5 x	2.40	x	0.30	x	1.20	=	0.432	0.432		0.400		0.173
C2	=	2.40	x	1.00	x	1.20	=	2.880	2.880		0.600		1.728
E1(wet)	=	1.85	x	1.70	x	1.20	=	3.774	3.774		0.600		2.264
E1(sat)	=	2.00	x	2.055	x	1.20	=	4.932	4.932		0.600		2.959
U1(up lift)	=	(1.00)	x	2.05	x	1.20	=	(2.466)	(2.466)		0.600		(1.480)
Rp 3							=	(36.060)	(36.060)		0.575		(20.735)
	total						=		(26.508)				(15.090)

Section 6 – 6

H 5.1l	=	0.300	m	W1	=	1.60 m
H 5.1r	=	1.000	m	W2	=	1.60 m
H wet	=	2.945	m			
H sat	=	2.055	m			

Load		Description Y	x	H	x	W	=	Weight	Vo	Ho	Xo	Yo	M = Vo.Xo
		m		m		t/m3		ton	ton	ton	m	m	t.m
C3.1	= 0.5 x	2.40	x	0.300	x	1.60	=	0.576	0.576		0.533		0.307
C3.2	=	2.40	x	1.000	x	1.60	=	3.840	3.840		0.800		3.072
E1(wet)	=	1.85	x	2.945	x	1.60	=	8.717	8.717		0.800		6.974
E1(sat)	=	2.00	x	2.055	x	1.60	=	6.576	6.576		0.800		5.261
U1(up lift)	=	1.00	x	2.055	x	1.60	=	3.288	3.288		0.800		2.630
Rp 1							=	(22.660)	(22.660)		0.975		(22.094)
Rp 2							=	(28.720)	(28.720)		0.000		0.000
	total						=		(28.383)				(3.849)

mqh-1

Project : Medan Flood Control	Japan International Cooperation Agency (JICA)	Calculation sheet
Channel : Percut River		Date
Structure : Br. P−3		Nos of sheet
Station : Pe 115 + 06		Prepared by

III.A.8.2 Normal Condition
Case − II. Low Water Level

Ka	=	0.297	Ywet	=	1.850	t/m3
Ht	=	6.000 m	Ysat	=	2.000	t/m3
Yw	=	1.000 t/m3	q	=	1.000	t/m2
Yc	=	2.400 t/m3				

Description	Total load (ton) Dead load	Line load	Uniform load	Pedestrian load	Total load	Nos of bearing	Width
Left side span	203.09	27.27	99.20	9.60	339.16	2.00	10.00
load per m wid	10.155	1.364	4.960	0.480	16.958		

Section 1 − 1 H1 = 1.245 m W1 = 0.300 m

Load		Description Y	x	Hn	x	Wn	=	Weight	Vo	Ho	Xo	Yo	M = Vo.Yo
		m		m		t/m3		ton	ton	ton	m	m	m
C1	=	2.40	x	1.245	x	0.30	=	0.896	0.896				
		q	x	H									
Pq	=	1.00	x	1.245			=	1.245		1.245		0.623	0.775
Pa1		0.5 x Y	x	H1^2	x	Ka							
	=	0.5 x 1.85	x	1.55	x	0.297	=	0.426		0.426		0.415	
		total							0.896	1.671			0.775

Section 2 − 2

H1	=	1.245 m	W1	=	0.30 m
H4	=	0.500 m	W4	=	0.55 m
H5	=	0.250 m	W5	=	0.55 m

Load		Description Ye	x	H	x	W	=	Weight	Vo	Ho	Xo	Yo	M = Vo.Yo
		m		m		t/m3		ton	ton	ton	m	m	t.m
C1	=	2.40	x	1.245	x	0.30	=	0.896	0.896		0.150		0.134
C4	=	2.40	x	0.500	x	0.55	=	0.660	0.660		0.275		0.182
C5	= 0.5 x	2.40	x	0.500	x	0.55	=	0.330	0.330		0.275		0.091
E1	=	q	x	H	x	W							
	=	1.00	x	1.245	x	0.25	=	0.311	0.311		0.275		0.086
		total							2.198				0.492

Section 3 − 3

H1	=	1.245 m	W1	=	0.300 m	H1 + H4 + H5	=	1.995 m
H2	=	1.000 m	W2	=	1.000 m	Pe	=	3.929 ton (by earthquake)
H4	=	0.500 m	W4	=	0.550 m	He=H4+H5	=	0.750 m
H5	=	0.250 m	W5	=	0.550 m			
H6	=	0.500 m	W6	=	0.200 m			
H7	=	0.250 m	W7	=	0.200 m			

Load		W Description Y	x	H	x	W	=	Weight	Vo	Ho	Xo	Yo	M
		m		m		t/m3		ton	ton	ton	m	m	t.m
C1	=	2.40	x	1.245	x	0.30	=	0.896	0.896				
C4	=	2.40	x	1.000	x	1.00	=	2.400	2.400				
C5	= 0.5 x	2.40	x	0.500	x	0.55	=	0.330	0.330				
C2	=	2.40	x	1.000	x	0.55	=	1.320	1.320				
C6	=	2.40	x	0.500	x	0.20	=	0.240	0.240				
C7	= 0.5 x	2.40	x	0.250	x	0.20	=	0.060	0.060				
Pe							=	3.929		3.929		0.75	2.947
Pq	=	1.00	x	1.995	x	0.20	=	0.399		0.399		0.998	0.398
Pa	= 0.5 x	1.85	x	1.995	x	0.297	=	0.548		0.548		0.665	0.364
Rv	=							16.958	16.958				
		sum							22.204	4.876			3.709

Section 4 − 4

Top deck e	=	13.488 m					
Lwl elv.	=	6.843 m					
Hwe elv.	=	9.843 m					
H back fill	=	Ht − H3					
	=	6.00 − 1.00	=	5.00 m			
Top footin	=	13.488 − 5.000	=	8.488 m			
H wet soil	=	13.488 − 8.488	=	5.000 m			
H sat soil	=	5.00 − 5.00	=	0 m			

H1	=	1.245 m	W1	=	0.300 m
H2	=	3.755 m	W2	=	1.000 m
H4	=	0.500 m	W4	=	0.550 m
H5	=	0.250 m	W5	=	0.550 m
H6	=	0.500 m	W6	=	0.200 m
H7	=	0.250 m	W7	=	0.200 m
H wet	=	5 :	3 +	0	= 1.667 m

Load		Description Y	x	Hn	x	Wn	Weight	Vo	Ho	Xo	Yo	M = Ho.Yo
		m		m		m	ton	ton	ton	m	m	t.m
C1	=	2.40	x	1.25	x	0.30 =	0.896	0.896				
C4	=	2.40	x	0.50	x	1.00 =	1.200	1.200				
C5	= 0.5 x	2.40	x	0.25	x	0.55 =	0.165	0.165				
C2	=	2.40	x	3.76	x	0.55 =	4.957	4.957				
C6	=	2.40	x	0.50	x	0.20 =	0.240	0.240				
C7	= 0.5 x	2.40	x	0.25	x	0.20 =	0.060	0.060				
Pe						=	3.929		3.929		3.755	14.753
Pq1	=	1.00	x	5.00	x	1.00 =	5.000		5.000		2.500	12.500
Pw1	= 0.5 x	1.85	x	25.000	x	0.297 =	6.868		6.868		4.496	30.879
Ps1	= 0.5 x	2.00	x	0.000	x	0.297 =	0.000		0.000		0.000	0.000
Ps2		2.00	x	0	x	0.297 =	0.000		0.000		0.000	0.000
Pwl	= 0.5 x	1.00	x	0.090	x	1.00 =	0.045		0.045		0.100	0.005
Pwr	= 0.5 x	1.00	x	0.000	x	1.00 =	0.000		0.000		0.000	0.000
Rv	=						16.958	16.958				
		sum						24.476	15.842			58.137

Section 5 − 5

H 5.1.r	=	0.300 m	W1	=	1.20 m
H 5.2.r	=	1.000 m	W2	=	1.20 m
H wet.r	=	5.000 −	1.245	=	3.76 m
H sat.r	=	0.000 m			

Load		Description													M = Vo.Xo
			Y	x	H	x	W	=	Weight	Vo	Ho	Xo	Yo	
			m		m		t/m3		ton	ton	ton	m	m		t.m
C1	=	0.5	x 2.40	x	0.30	x	1.20	=	0.432	0.432		0.400			0.173
C2	=		2.40	x	1.00	x	1.20	=	2.880	2.880		0.600			1.728
E1(wet)	=		1.85	x	3.76	x	1.20	=	8.336	8.336		0.600			5.002
E1(sat)	=		2.00	x	0.000	x	1.20	=	0.000	0.000		0.600			0.000
U1(up lift)	=		(1.00)	x	0.00	x	1.20	=	0.000	0.000		0.600			0.000
Rp 3								=	(36.060)	(36.060)		0.575			(20.735)
		total						=		(24.412)					(13.832)

Section 6 – 6

H 5.1l	=	0.300 m	W1	=	1.60 m
H 5.1r	=	1.000 m	W2	=	1.60 m
H wet	=	5.000 m			
H sat	=	0.000 m			

Load		Description													M = Vo.Xo
			Y	x	H	x	W	=	Weight	Vo	Ho	Xo	Yo	
			m		m		t/m3		ton	ton	ton	m	m		t.m
C 3.1	=	0.5	x 2.40	x	0.300	x	1.60	=	0.576	0.576		0.533			0.307
C 3.2	=		2.40	x	1.000	x	1.60	=	3.840	3.840		0.800			3.072
E1(wet)	=		1.85	x	5.000	x	1.60	=	14.800	14.800		0.800			11.840
E1(sat)	=		2.00	x	0.000	x	1.60	=	0.000	0.000		0.800			0.000
U1(up lift)	=		1.00	x	0.000	x	1.60	=	0.000	0.000		0.800			0.000
Rp 1								=	(22.660)	(22.660)		0.975			(22.094)
Rp 2								=	(28.720)	(28.720)		0.000			0.000
		total						=		(32.164)					(6.874)

mqh–2

Project	:	Medan Flood Control
Channel	:	Percut River
Structure	:	Br. P–3
Station	:	PE 114 + 76 m

Japan International Cooperation Agency (JICA)

Calculation sheet

Date	
Nos of sheet	
Prepared by	

III.A.8.3 Earthquake Condition
Case – III, High Water Level

Ka	=	0.407	Ywet	=	1.850 t/m3
Ht	=	6.000 m	Ysat	=	2.000 t/m3
Yw	=	1.000 t/m3	q	=	0.500 t/m2
Yc	=	2.400 t/m3			

Description	Total load (ton)						
	Dead load	Line load	Uniform load	Pedestrian load	Total load	Nos of bearing	Width
Left side span	203.09	27.27	99.20	9.60	339.16	2.00	10.00
load per m wid	10.155	1.364	4.960	0.480	16.958		

Section 1 – 1 H1 = 1.245 m W1 = 0.300 m

Load		Description													M = Vo.Yo
			Y	x	Hn	x	Wn	=	Weight	Vo	Ho	Xo	Yo	
			m		m		t/m3		ton	ton	ton	m	m		m
C1	=		2.40	x	1.245	x	0.30	=	0.896	0.896					
			q	x	H										
Pq	=		0.50	x	1.245			=	0.623		0.623		0.623		0.388
Pa1		0.5 x	Y	x	H1^2	x	Ka								
	=	0.5 x	1.85	x	1.55	x	0.407	=	0.584		0.584		0.415		
		total								0.896	1.206				0.388

Section 2 – 2

H1	=	1.245 m	W1	=	0.30 m
H4	=	0.500 m	W4	=	0.55 m
H5	=	0.250 m	W5	=	0.55 m

Load		Description													M = Vo.Yo
			Yc	x	H	x	W	=	Weight	Vo	Ho	Xo	Yo	
			m		m		t/m3		ton	ton	ton	m	m		t.m
C1	=		2.40	x	1.245	x	0.30	=	0.896	0.896		0.150			0.134
C4	=		2.40	x	0.500	x	0.55	=	0.660	0.660		0.275			0.182
C5	=	0.5 x	2.40	x	0.500	x	0.55	=	0.330	0.330		0.275			0.091
E1	=		q	x	H	x	W								
	=		0.50	x	1.245	x	0.25	=	0.156	0.156		0.275			0.043
		total								2.042					0.450

Section 3 – 3

H1	=	1.245 m	W1	=	0.300 m	H1 + H4 + H5	=	2.245 m
H2	=	1.000 m	W2	=	1.000 m	Pe	=	3.929 ton (by earthquake)
H4	=	0.500 m	W4	=	0.550 m	He=H4+H5	=	1.000 m
H5	=	0.500 m	W5	=	0.550 m			
H6	=	0.500 m	W6	=	0.200 m			
H7	=	0.250 m	W7	=	0.200 m			

mqh–3

Load		W = Description							Vo	Ho	Xo	Yo	M
		Y	x	H	x	W	=	Weight					
		m		m		t/m3		ton	ton	ton	m	m	t.m
C1	=	2.40	x	1.245	x	0.30	=	0.896	0.896				
C4	=	2.40	x	1.000	x	1.00	=	2.400	2.400				
C5	= 0.5 x	2.40	x	0.500	x	0.55	=	0.330	0.330				
C2	=	2.40	x	1.000	x	0.55	=	1.320	1.320				
C6	=	2.40	x	0.500	x	0.20	=	0.240	0.240				
C7	= 0.5 x	2.40	x	0.250	x	0.20	=	0.060	0.060				
Pe							=	3.929		3.929		1.00	3.929
Pq	=	0.50	x	2.245	x	0.20	=	0.225		0.225		1.123	0.252
Pa	= 0.5 x	1.85	x	2.245	x	0.407	=	0.845		0.845		0.748	0.632
Rv	=							16.958	16.958				
	sum								22.204	4.999			4.813

Section 4 – 4

Top deck e = 13.488 m
Hwl elv. = 10.543 m
Hwc elv. = 9.843 m
H back fill = Ht – H3
= 6.00 – 1.00 = 5.00 m
Top footin = 13.488 – 5.000 = 8.488 m
H wet soil = 13.488 – 10.543 = 2.945 m
H sat soil = 5.00 – 2.945 = 2.055 m

H1	= 1.245 m	W1	=	0.300 m
H2	= 3.755 m	W2	=	1.000 m
H4	= 0.500 m	W4	=	0.550 m
H5	= 0.500 m	W5	=	0.550 m
H6	= 0.500 m	W6	=	0.200 m
H7	= 0.250 m	W7	=	0.200 m

H wet = 2.945 : 3 + 2.055 = 3.037 m

Load		Description: Y	x	Hn	x	Wn	Weight	Vo	Ho	Xo	Yo	M = Ho.Yo
		m		m		m	ton	ton	ton	m	m	t.m
C1	=	2.40	x	1.25	x	0.30 =	0.896	0.896				
C4	=	2.40	x	0.50	x	1.00 =	1.200	1.200				
C5	= 0.5 x	2.40	x	0.50	x	0.55 =	0.330	0.330				
C2	=	2.40	x	3.76	x	0.55 =	4.957	4.957				
C6	=	2.40	x	0.50	x	0.20 =	0.240	0.240				
C7	= 0.5 x	2.40	x	0.25	x	0.20 =	0.060	0.060				
Pe						=	3.929		3.929		3.755	14.753
Pq1	=	0.50	x	5.00	x	1.00 =	2.500		2.500		2.500	6.250
Pw1	= 0.5 x	1.85	x	8.673	x	0.407 =	3.265		3.265		6.551	21.390
Ps1	= 0.5 x	2.00	x	4.223	x	0.407 =	1.719		1.719		0.685	1.177
Ps2		2.00	x	2.055	x	0.407 =	1.673		1.673		1.027	1.719
Pwl	= 0.5 x	1.00	x	5.546	x	1.00 =	2.773		2.773		0.785	2.177
Pwr	= 0.5 x	1.00	x	4.223	x	1.00 =	(2.112)		(2.112)		0.685	(1.446)
Rv	=						16.958	16.958				
	sum							24.641	13.747			46.020

Section 5 – 5

H 5.1.r = 0.300 m W1 = 1.20 m
H 5.2.r = 1.000 m W2 = 1.20 m
H wet.r = 2.945 – 1.245 = 1.70 m
H sat.r = 2.055 m

mqh–3

Load		Description: Y	x	H	x	W	=	Weight	Vo	Ho	Xo	Yo	M = Vo.Xo
		m		m		t/m3		ton	ton	ton	m	m	t.m
C1	= 0.5 x	2.40	x	0.30	x	1.20	=	0.432	0.432		0.400		0.173
C2	=	2.40	x	1.00	x	1.20	=	2.880	2.880		0.600		1.728
E1(wet)	=	1.85	x	1.70	x	1.20	=	3.774	3.774		0.600		2.264
E1(sat)	=	2.00	x	2.055	x	1.20	=	4.932	4.932		0.600		2.959
U1(up lift)	=	(1.00)	x	2.05	x	1.20	=	(2.466)	(2.466)		0.600		(1.480)
Rp 3							=	(36.060)	(36.060)		0.575		(20.735)
	total						=		(26.508)				(15.090)

Section 6 – 6

H 5.1l = 0.300 m W1 = 1.60 m
H 5.1r = 1.000 m W2 = 1.60 m
H wet = 2.945 m
H sat = 2.055 m

Load		Description: Y	x	H	x	W	=	Weight	Vo	Ho	Xo	Yo	M = Vo.Xo
		m		m		t/m3		ton	ton	ton	m	m	t.m
C 3.1	= 0.5 x	2.40	x	0.300	x	1.60	=	0.576	0.576		0.533		0.307
C 3.2	=	2.40	x	1.000	x	1.60	=	3.840	3.840		0.800		3.072
E1(wet)	=	1.85	x	2.945	x	1.60	=	8.717	8.717		0.800		6.974
E1(sat)	=	2.00	x	2.055	x	1.60	=	6.576	6.576		0.800		5.261
U1(up lift)	=	1.00	x	2.055	x	1.60	=	3.288	3.288		0.800		2.630
Rp 1							=	(22.660)	(22.660)		0.975		(22.094)
Rp 2							=	(28.720)	(28.720)		0.000		0.000
	total						=		(28.383)				(3.849)

mqh–3

Project : Medan Flood Control Channel : Percut River Structure : Br. P−3 Station : Pe 115 + 06	Japan International Cooperation Agency (JICA)	Calculation sheet Date Nos of sheet Prepared by

III.A.8.4 Earthquake Condition
Case − IV, Low Water Level

Ka	=	0.407		Ywet	=	1.850	t/m3
Ht	=	6.000	m	Ysat	=	2.000	t/m3
Yw	=	1.000	t/m3	q	=	0.500	t/m2
Yc	=	2.400	t/m3				

Description	Total load (ton) Dead load	Line load	Uniform load	Pedestrian load	Total load	Nos of bearing	Width
Left side span	203.09	27.27	99.20	9.60	339.16	2.00	10.00
load per m wid	10.155	1.364	4.960	0.480	16.958		

Section 1 − 1 H1 = 1.245 m W1 = 0.300 m

Load		Description							Vo	Ho	Xo	Yo	M = Vo.Yo
		Y	x	Hn	x	Wn	=	Weight					
		m		m		t/m3		ton	ton	ton	m	m	m
C1	=	2.40	x	1.245	x	0.30	=	0.896	0.896				
		q	x	H									
Pq	=	0.50	x	1.245			=	0.623		0.623		0.623	0.388
Pa1		0.5 x	Y	x	H1^2	x	Ka						
	=	0.5 x	1.85	x	1.55	x	0.407	= 0.584		0.584		0.415	
total									0.896	1.206			0.388

Section 2 − 2

H1	=	1.245 m	W1	=	0.30 m
H4	=	0.500 m	W4	=	0.55 m
H5	=	0.250 m	W5	=	0.55 m

Load		Description							Vo	Ho	Xo	Yo	M = Vo.Yo
		Yc	x	H	x	W	=	Weight					
		m		m		t/m3		ton	ton	ton	m	m	t.m
C1	=	2.40	x	1.245	x	0.30	=	0.896	0.896		0.150		0.134
C4	=	2.40	x	0.500	x	0.55	=	0.660	0.660		0.275		0.182
C5	= 0.5 x	2.40	x	0.500	x	0.55	=	0.330	0.330		0.275		0.091
E1	=	q	x	H	x	W							
	=	0.50	x	1.245	x	0.25	=	0.156	0.156		0.275		0.043
total									2.042				0.450

Section 3 − 3

H1	=	1.245 m	W1	=	0.300 m	H1 + H4 + H5	=	2.245 m
H2	=	3.000 m	W2	=	1.000 m	Pe	=	3.929 ton (by earthquake)
H4	=	0.500 m	W4	=	0.550 m	He=H4+H5	=	1.000 m
H5	=	0.500 m	W5	=	0.550 m			
H6	=	0.500 m	W6	=	0.200 m			
H7	=	0.250 m	W7	=	0.200 m			

Load		W Description Y	x	H	x	W	=	Weight	Vo	Ho	Xo	Yo	M
		m		m		t/m3		ton	ton	ton	m	m	t.m
C1	=	2.40	x	1.245	x	0.30	=	0.896	0.896				
C4	=	2.40	x	0.500	x	1.00	=	1.200	1.200				
C5	= 0.5 x	2.40	x	0.500	x	0.55	=	0.330	0.330				
C2	=	2.40	x	3.000	x	0.55	=	3.960	3.960				
C6	=	2.40	x	0.500	x	0.20	=	0.240	0.240				
C7	= 0.5 x	2.40	x	0.250	x	0.20	=	0.060	0.060				
Pe							=	3.929		3.929		1.00	3.929
Pq	=	0.50	x	2.245	x	0.20	=	0.225		0.225		1.123	0.252
Pa	= 0.5 x	1.85	x	2.245	x	0.407	=	0.845		0.845		0.748	0.632
Rv	=							16.958	16.958				
sum									23.644	4.999			4.813

Section 4 − 4

Top deck e	=	13.488	m				
Lwl elv.	=	6.843	m				
Hwe elv.	=	9.843	m				
H back fill	=	Ht	−	H3			
	=	6.00	−	1.00	=	5.00	m
Top footin	=	13.488	−	5.000	=	8.488	m
H wet soil	=	13.488	−	8.488	=	5.000	m
H sat soil	=	5.00	−	5.00	=	0	m

H1	=	1.245 m	W1	=	0.300 m
H2	=	3.755 m	W2	=	1.000 m
H4	=	0.500 m	W4	=	0.550 m
H5	=	0.500 m	W5	=	0.550 m
H6	=	0.500 m	W6	=	0.200 m
H7	=	0.250 m	W7	=	0.200 m
H wet	=	5 :	3 +	0	= 1.667 m

Load		Description Y	x	Hn	x	Wn	Weight	Vo	Ho	Xo	Yo	M = Ho.Yo
		m		m		m	ton	ton	ton	m	m	t.m
C1	=	2.40	x	1.25	x	0.30	= 0.896	0.896				
C4	=	2.40	x	0.50	x	1.00	= 1.200	1.200				
C5	= 0.5 x	2.40	x	0.50	x	0.55	= 0.330	0.330				
C2	=	2.40	x	3.76	x	0.55	= 4.957	4.957				
C6	=	2.40	x	0.50	x	0.20	= 0.240	0.240				
C7	= 0.5 x	2.40	x	0.25	x	0.20	= 0.060	0.060				
Pe							= 3.929		3.929		3.755	14.753
Pq1	=	0.50	x	5.00	x	1.00	= 2.500		2.500		2.500	6.250
Pw1	= 0.5 x	1.85	x	25.000	x	0.407	= 9.412		9.412		4.496	42.316
Ps1	= 0.5 x	2.00	x	0.000	x	0.407	= 0.000		0.000		0.000	0.000
Ps2		2.00	x	0	x	0.407	= 0.000		0.000		0.000	0.000
Pwl	= 0.5 x	1.00	x	0.090	x	1.00	= 0.045		0.045		0.100	0.005
Pwr	= 0.5 x	1.00	x	0.000	x	1.00	= 0.000		0.000		0.000	0.000
Rv	=						16.958	16.958				
sum								24.641	15.886			63.324

Section 5 − 5

H 5.1.r	=	0.300 m	W1	=	1.20 m
H 5.2.r	=	1.000 m	W2	=	1.20 m
H wet.r	=	5.000 −	1.245	=	3.76 m
H sat.r	=	0.000 m			

Load		Description							Vo	Ho	Xo	Yo	M = Vo.Xo
		Y	x	H	x	W	=	Weight					
		m		m		t/m3		ton	ton	ton	m	m	t.m
C1	=	0.5 x	2.40	x	0.30	x	1.20	=	0.432	0.432		0.400		0.173
C2	=		2.40	x	1.00	x	1.20	=	2.880	2.880		0.600		1.728
E1(wet)	=		1.85	x	3.76	x	1.20	=	8.336	8.336		0.600		5.002
E1(sat)	=		2.00	x	0.000	x	1.20	=	0.000	0.000		0.600		0.000
U1(up lift)	=		(1.00)	x	0.00	x	1.20	=	0.000	0.000		0.600		0.000
Rp 3								=	(36.060)	(36.060)		0.575		(20.735)
		total						=		(24.412)				(13.832)

Section 6 – 6

H 5.1l = 0.300 m W1 = 1.60 m
H 5.1r = 1.000 m W2 = 1.60 m
H wet = 5.000 m
H sat = 0.000 m

Load		Description							Vo	Ho	Xo	Yo	M = Vo.Xo
		Y	x	H	x	W	=	Weight					
		m		m		t/m3		ton	ton	ton	m	m	t.m
C 3.1	=	0.5 x	2.40	x	0.300	x	1.60	=	0.576	0.576		0.533		0.307
C 3.2	=		2.40	x	1.000	x	1.60	=	3.840	3.840		0.800		3.072
E1(wet)	=		1.85	x	5.000	x	1.60	=	14.800	14.800		0.800		11.840
E1(sat)	=		2.00	x	0.000	x	1.60	=	0.000	0.000		0.800		0.000
U1(up lift)	=		1.00	x	0.000	x	1.60	=	0.000	0.000		0.800		0.000
Rp 1								=	(22.660)	(22.660)		0.975		(22.094)
Rp 2								=	(28.720)	(28.720)		0.000		0.000
		total						=		(32.164)				(6.874)

mqh-4

Project : Medan Flood Control Channel : Percut River Structure : Br – P 3 Station : Pe 115 + 08	Japan International Cooperation Agency (JICA)	Calculation sheet Date Nos of sheet Prepared by

III.A.9 Resume forces on Abutment Section

Case – I,Normal Condition (HWL)

Case	Forces	Unit	Section 1	2	3	4	5	6
Case – I	Moment	t.m	0.775	0.492	4.895	45.706	15.09	3.849
		kg.cm	77,500	49,200	489,500	4,570,600	1,509,000	384,900
	Shear	ton	1.67	2.198	4.995	14.448	26.508	28.383
		kg	1,671	2,198	4,995	14,448	26,508	28,383
	Normal	ton	0.90	0	21.004	24.641	0	0
		kg	896	0	21,004	24,641	0	0

Case – II,Normal Condition (LWL)

Case	Forces	Unit	Section 1	2	3	4	5	6
Case – II	Moment	t.m	0.775	0.492	3.709	58.137	13.832	6.874
		kg.cm	77,500	49,200	370,900	5,813,700	1,383,200	687,400
	Shear	ton	1.671	2.198	4.876	15.842	24.412	32.164
		kg	1,671	2,198	4,876	15,842	24,412	32,164
	Normal	ton	0.896	0	22.204	24.476	0	0
		kg	896	0	22,204	24,476	0	0

Case – III,Earthquake Condition (HWL)

Case	Forces	Unit	Section 1	2	3	4	5	6
Case – III	Moment	t.m	0.388	0.45	4.813	46.02	15	3.849
		kg.cm	38,800	45,000	481,300	4,602,000	1,500,000	384,900
	Shear	ton	1.206	2.042	4.999	13.747	26.508	28.383
		kg	1,206	2,042	4,999	13,747	26,508	28,383
	Normal	ton	0.896	0	22.204	24.641	0	0
		kg	896	0	22,204	24,641	0	0

Case – IV,Earthquake Condition (LWL)

Case	Forces	Unit	Section 1	2	3	4	5	6
Case – IV	Moment	t.m	0.388	0.45	4.813	63.324	13.832	6.874
		kg.cm	38,800	45,000	481,300	6,332,400	1,383,200	687,400
	Shear	ton	1.206	2.024	4.99	15.886	24.412	32.164
		kg	1,206	2,024	4,990	15,886	24,412	32,164
	Normal	ton	0.896	0	23.644	24.641	0	0
		kg	896	0	23,644	24,641	0	0

mnh

Project	: Medan Flood Control	Japan International Cooperation Agency (JICA)	Calculation sheet	
Channel	: Percut River		Date	
Structure	: Br – P 3		Nos of sheet	
Station	: Pe 115 + 06		Prepared by	

III.A.10 Reinforcing steel bar of Abutment section

Section – 4

Item	Describtion	unit	Normal condition Calcu–lation	Earth quake condition Calcu–lation
	Allowance stresses			
concrete compressive	fc = K – 225	kg/cm2	*75*	*75*
steel tensile	fs	kg/cm2	*1400*	*1400*
concrete shear	tou without r.bar	kg/cm2	*8*	*8*
	tou with r.bar	kg/cm2	*20*	*20*
transformend	n = Es/Ec		*21*	*21*
Moment	M	t.m	45.706	63.324
		kg.cm	4,570,600	6,332,400
Shear	S	ton	14.448	15.886
		kg	14448	15886
Normal	N	ton	24.641	24.641
		kg	24,641	24,641
dimension	b	cm	*100*	*100*
	ht	cm	*375.50*	*375.50*
	d'	cm	*10*	*10*
	h	cm	*366*	*366*
	b.h	cm2	*36,550*	*36,550*
	eo1=M/N	cm	185.49	256.99
	eo2=1/30.ht,> 2 cm	cm	12.52	12.52
	used eo2	cm	2.00	2.00
	eo=eo1+eo2	cm	187.49	258.99
	eo/ht (see table)		0.50	0.69
	C		4.40	4.40
	lk	cm	340	340
	100.ht	cm	37,550	37,550
	lk/100.ht	cm	0.0091	0.0091
	(lk/100.ht) ^ 2	cm	*0.0001*	*0.0001*
	e1=C.[lk/(100.ht)] ^ 2.ht	cm	*0.135*	*0.135*
	e2=0.15.ht	cm	*56.32*	*56.32*
	e=eo+e1+e2	cm	*243.95*	*315.45*
	ea=e+1/2.ht–d'	cm	421.70	493.20
	M' = N.ea	kg.cm	10,391,062	12,152,862
	n.M'	kg.cm	218,212,299	255,210,099
	b.fs	kg/cm	140,000	140,000
	n.M'/(b.fs)		1,558.66	1,822.93
	@sqrt(n.M'/(b.fs))		39.48	42.70
	Ca=h /@sqrt(n.M'/b.fs) see PBI 1971 N.I–2		*9.258*	*8.561*
	n.fc		1,575	1,575
	øo = fs / (n.fc)		0.8889	0.8889
	delta		0.60	0.60
	from table fined Ca		8.767	8.767
Calculation for reinfor–cement bar with steel full working	fine ø > øo		5.667	5.667
	ø'		17.000	17.000
	ksi(j)		0.150	0.150
	zeta		0.948	0.948
	100 nw		1.372	1.372
	nw		0.01372	0.01372
	w		0.00065	0.00065
	ea/h		1.15	1.35
	from table fined i		5.48	3.210
	i.A = wbh		23.88	23.88
	A	cm2	4.36	7.44
	A' =delta.	cm2	14.328	14.328

A – used bar dia. 25 mm @ 12.5 cm,

= 1.327

= 10

= 10 x 1.327

= 13.27 cm > 14.33 cm2

A' – used bar dia. 25 mm @ 12.5 cm,

Area @ bar = 4.900

nos of bar = 10

total area = 10 x 4.900

(cm2) = 49.00 cm2 > 14.33

	steel bar full warking		
	n.ø		119.01
tension of bar	fs	kg/cm2	1,400.00
compressive concrete	fc' = fs / (n.ø)	kg/cm2	11.76
tensile of bar	fs' = fs / ø'	kg/cm2	82.35
	7/8.b.h	cm2	31,981.25
shear concrete	Tca = S / (7/8.b.h)	kg/cm2	0.45

Section – 5

Item	Describtion	unit	Normal condition Calcu–lation	Earth quake condition Calcu–lation
	Allowance stresses			
concrete compressive	fc = K – 225	kg/cm2	*75*	*75*
steel tensile	fs	kg/cm2	*1400*	*1400*
concrete shear	tou without r.bar	kg/cm2	*8*	*8*
	tou with r.bar	kg/cm2	*20*	*20*
transformend	n = Es/Ec		*21*	*21*
Moment	M	t.m	87.028	108.965
		kg.cm	8,702,800	10,896,500
Shear	S	ton	82.328	96.414
		kg	82328	96414
dimension	b	cm	*100*	*100*
	ht	cm	*160*	*160*
	d'	cm	*10*	*10*
	h	cm	*150*	*150*
	b.h	cm2	*15,000*	*15,000*
	M	kg.cm	8,702,800	10,896,500
	n.M	kg.cm	182,758,800	228,826,500
	b.fs	kg/cm	140,000	140,000
	n.M / (b.fs)		1,305.42	1,634.48
	@sqrt(n.M /(b.fs))		36.13	40.43
	Ca=h /@sqrt(n.M/b.fs) see PBI 1971 N.I–2		*4.152*	*3.710*
	n.fc		1,575	1,575
	øo = fs / (n.fc)		0.8889	0.8889
	delta		0.60	0.60
	from table fined Ca		3.784	3.784
Calculation for reinfor–cement bar with steel full working	fine ø > øo		2.279	2.279
	ø'		3.390	3.390
	ksi(j)		0.305	0.305
	zeta		0.899	0.899
	100 nw		8.132	8.132
	nw		0.08132	0.08132
	w		0.00387	0.00387
	A	cm2	58.09	58.09
	A' =delta.i.A	cm2	34.85	34.85

A – used bar dia. 25 mm @ 12.5 cm,

Area @ bar = 4.900

nos of bar = 10

total area = 10 x 4.9

(cm2) = 49.00 cm > 58.09 cm2

A' – used bar dia. 25 mm @ 12.5 cm,

Area @ bar = 4.900

nos of bar = 10

total area = 10 x 4.900

(cm2) = 49 cm2 > 34.85

	steel bar full warking		
	n.ø		47.86
tension of bar	fs	kg/cm2	1,400.00
compressive concrete	fc' = fs / (n.ø)	kg/cm2	29.25
tensile of bar	fs' = fs / ø'	kg/cm2	412.98
	7/8.b.h	cm2	13,125.00
shear concrete	Tca = S / (7/8.b.h)	kg/cm2	6.27

bar

Project : Medan Flood Control	Japan International Cooperation Agency (JICA)	Calculation sheet	
Channel : Pereut River		Date	
Structure : Br. P-3		Nos of sheet	
Station : Pe 115 + 06		Prepared by	

III FOUNDATION
B.File for Pier
III.B.1 Charateristic of steel pipe pile
III.B.1.1 Normal condition

t' = thick of steel pipe corrotion.
do = outer diameter of steel pipe
t = thick of steel pipe after corrosion
di = Inner diameter of steel pipe
Beta = characteristic value of pile
d = outside diameter of pile before corrotion
de = outside diameter of pile after corrotion
delta = the standard amount of displacement (cm)
k = coefficuent of horizontal subgrade reaction (kg/cm2)
Eo = modulus of deformation of the ground obtained from table 3.5

Inersia
Ic = Inersia concrete
Is = Inersia steel

Modulus elasticvty
Es = pile/steel
Ec = concrete

thick of corosion = t' = 0.100 x 1.0310 = 0.1031 cm
normal thick = te = 1.031 - 0.1031 = 0.9279 cm

de effective = do - 2 x te
de = 40.00 - 2.00 x 0.9279
= 40.00 - 1.86
= 38.14 cm

di = (de - (2 x t) cm
= 38.14 - 2.00 x 0.93
= 38.14 - 1.86
= 36.29 cm

de^4 = 2,116,967 cm4
di^4 = 1,734,089 cm4
de^4 - di^4 = 2,116,967 - 1,734,089
= 382,878 cm4

$$Beta = \left(\frac{kh.de}{4.E.I}\right)^{0.25}$$

kho = 1/30 x alpa x Eo
Alpha = 0.20 from table 3.5
Eo = 28 x N
= 28.00 x 10.00
= 280 kg/cm3

Permanent load
Ec (K-225) = 257,495 kg/cm2
Es = 1,897,200 kg/cm2

$$1/n = \frac{257,495}{1,897,200}$$
= 0.1357

Ixc = @pi/64 x de^4 x 1/n
= 0.05 x 2,116,967 x 0.13572
= 14,104 cm^4

Ixs = @pi/64 x (de^4 - di^4)
= 0.05 x 382,878
= 18,794 cm4

Ix tot. = Ixc + Ixs
= 14,104 + 18,794
= 32,898 cm2

E.I = 1,897,200 x 32,898
= 62,414,849,390 kg.cm2

4.E.I = 4 x 62,414,849,390
= 249,659,397,562 kg.cm2

kho = 1/30 x Alpa x Eo
= 0.03 x 1 x 280
= 9.33 kg/cm3

kh = kho x {(Bh) / 30 }^-0.75 (1)------ equition

Bh = @sqrt (de / Beta)

$$\frac{de}{Beta} = \frac{38.1442}{0.005031} = 7,582.47$$

------>>>> Beta find by trial

Bh = 87.08
87.08

$$Bh/30 = \frac{87.08}{30.00} = 2.90$$

(Bh/30)^-0.75 = 0.45

kh = 9.33 x 0.45
= 4.1971

$$Beta = \left(\frac{kh \times de}{4.EI}\right)^{0.25}$$ (2)----- equition

$$kh = \frac{Beta^4 \times 4.EI}{de}$$

$$kh = \frac{6.404308E-10}{38.1442} \times 249,659,397,562$$

(1) = (2)

4.1971 = 4.1917 kg/cm3

By trial method, kh left side equal to kh right side

kh = 4,191.71 ton / m3
Beta = 0.005031 cm-1
Beta = 0.503058 m-1
kh.D = 4.19 x 38.14
= 159.89 kg/cm2

Allowance Horizontal Force

$$Han = \frac{kh.D}{Beta} \times delta$$

$$Han = \frac{159.89}{0.01} \times 1.00$$
= 31,784 kg
= 31.784 ton

char-n

Project	: Medan Flood Control	Japan International Cooperation Agency (JICA)	Calculation sheet	
Channel	: Percut River		Date	
Structure	: Br. P-3		Nos of sheet	
Station	: Pe 115 + 06		Prepared by	

III.B.1.2 Earthquake condition

t' = thick of steel pipe corrotion
do = outer diameter of steel pipe
t = thick of steel pipe after corrosion
di = Inner diameter of steel pipe
Beta = characteristic value of pile
d = outside diameter of pile before corrotion
de = outside diameter of pile after corrotion
delta = the standard amount of displacement (cm)
k = coefficuent of horizontal subgrade reaction (kg/cm2)
Eo = modulus of deformation of the ground obtained from table 3.5

Inersia
Ic = Inersia concrete
Is = Inersia steel

Modulus elasticyty
Es = pile/steel
Ec = concrete

thick of corosion = t' = 0.100 x 1.0310 = 0.1031 cm
normal thick = te = 1.031 − 0.1031 = 0.9279 cm

de effective = do − 2 x te
de = 40.00 − 2.00 x 0.9279
= 40.00 − 1.86
= 38.14 cm

di = (de − (2 x t) cm
= 38.14 − 2.00 x 0.93
= 38.14 − 1.86
= 36.29 cm

de^4 = 2,116,967 cm4
di^4 = 1,734,089 cm4
de^4 − di^4 = 2,116,967 − 1,734,089
= 382,878 cm4

$$Beta = \left(\frac{kh.de}{4.E.I}\right)^{0.25}$$

kho = 1/30 x alpa x Eo
Alpha = 0.20 from table 3.5
Eo = 28 x N
= 28.00 x 10.00
= 280 kg/cm3

Temporary load
Ec (K-225) = 386,242 kg/cm2
Es = 1,897,200 kg/cm2

$$1/n = \frac{386{,}242}{1{,}897{,}200}$$
= 0.2036

Ixc = @pi/64 x de^4 x 1/n
= 0.05 x 2,116,967 x 0.20359
= 21,156 cm^4

Ixs = @pi/64 x (de^4 − di^4)
= 0.05 x 382,878
= 18,794 cm4

Ix tot. = Ixc + Ixs
= 21,156 + 18,794
= 39,950 cm2

E.I = 1,897,200 x 39,950
= 75,793,769,494 kg.cm2

4.E.I = 4.00 x 75,793,769,494
= 303,175,077,976 kg.cm2

kho = 1/30 x Alpa x Eo
= 0.03 x 1 x 280
= 9.33 kg/cm3

kh = kho x {(Bh) / 30 } ^ −0.75 (1)------ equition

Bh = @sqrt (de / Beta)

$$\frac{de}{Beta} = \frac{38.1442}{0.004771} = 7{,}995.58$$ ------>>>> Beta find by trial

Bh = 89.42
$$Bh/30 = \frac{89.42}{30.00} = 2.98$$
(Bh/30)^ −0.75 = 0.44
kh = 9.33 x 0.44
= 4.1144

$$Beta = \left(\frac{kh \times de}{4.EI}\right)^{0.25}$$ (2)------ equition

$$kh = \frac{Beta^4 \times 4.EI}{de}$$

$$kh = \frac{5.18E-10}{38.1442} \times 303{,}175{,}077{,}976$$

------ (1) = ------ (2)

4.1144 = 4.1170 kg/cm3

By trial method, kh left side equal to kh right side

kh = 4,116.97 ton / m3
Beta = 0.004771 cm−1
Beta = 0.477066 m−1
kh.D = 4.12 x 38.14
= 157.04 kg/cm2

Allowance Horizontal Force

$$Han = \frac{kh.D}{Beta} \times delta$$

$$Han = \frac{157.04}{0.00} \times 1.00$$
= 32,918 kg
= 32.918 ton

Project : Medan Flood Control	Japan International Cooperation Agency (JICA)	Calculation sheet	
Channel : Percut River		Date	
Structure : Br. P-3		Nos of sheet	
Station : Pe 115 + 06		Prepared by	

III.B.2 Axial bearing load allowance for a pile

a. by soil

do = outer diameter of a pile (m)
di = inner diameter of a pile (m)
Lb = depth of log boring from top soil to the hard layer N > 40
As = total circumferential surface area of the pile (m2)
N2' = mean N-value in the range from the tip of the pile to 10xD above.
do = diameter or width of the pile
Ru = ultimate bearing capacity of the pile
li = statum thickness with the skin friction power taken into account (m)
fi = maximum unit area skin friction power of statum with the skin friction power taken into account (t/m2)
Ws = effective weight of soil which replace by pile
W = effective weight of concrete which filled in the pile
Lc = length of pile filled by concrete
N2' = Mean N-value in the range from the tip of the pile to 10xD above.
do = diameter or width of the pile

do = 0.40 m
t = 0.075 m
di = (do − (2 x t) m
= 0.40 − 0.150
= 0.25 m

do^2 = 0.1600 m2
di^2 = 0.0625 m2
do^2−di^2 = 0.1600 − 0.06
= 0.0975 m2

Ap = area of a pile (m2)
= 0.25 x 3.14 x(do^2 − di^2)
= 0.25 x 3.14 x 0.0975
= 0.0766 m2

Length of pile = Lp
Lp = 19.00 m
ro = 0.20 m
U = 2.00 x @Pi x ro
= 2.00 x 3.14 x 0.20
= 1.26 m

As = total circumferential surface area of the pile (m2)
= U x Lp
= 1.26 x 19.00
= 23.88 m2

N1 = 50.00
N = 40.00
Length pile embedded = 13.00 m

III.2.1 Normal condition
N − value of embedded

N−value top	N−value bot.	Elv. top	Elv. bot.	avrg depth	tot depth	avrg N−value	tot. N−value	Kind of soils	(t/m2)	lixfi
7.00	8.00	5.427	4.427	1.00	1.00	7.50	7.50	clay	5.40	5.40
8.00	6.00	4.427	3.427	1.00	2.00	7.00	7.00	do	5.40	5.40
6.00	23.00	3.427	2.427	1.00	3.00	14.50	14.50	fine sanc	6.80	6.80
23.00	6.00	2.427	1.427	1.00	4.00	14.50	14.50	do	6.80	6.80
6.00	3.00	1.427	0.427	1.00	5.00	4.50	4.50	do	6.80	6.80
3.00	4.00	0.427	(0.573)	1.00	6.00	3.50	3.50	do	6.80	6.80
4.00	7.00	(0.573)	(1.573)	1.00	7.00	5.50	5.50	do	6.80	6.80
7.00	6.00	(1.573)	(2.573)	1.00	8.00	6.50	6.50	do	6.80	6.80
6.00	8.00	(2.573)	(3.573)	1.00	9.00	7.00	7.00	do	6.80	6.80
8.00	7.00	(3.573)	(4.573)	1.00	10.00	7.50	7.50	do	6.80	6.80
7.00	8.00	(4.573)	(5.573)	1.00	11.00	7.50	7.50	do	6.80	6.80
8.00	6.00	(5.573)	(6.573)	1.00	12.00	7.00	7.00	do	6.80	6.80
6.00	9.00	(6.573)	(7.573)	1.00	13.00	7.50	7.50	do	6.80	6.80
9.00	8.00	(7.573)	(8.573)	1.00	14.00	8.50	8.50	do	6.80	6.80
8.00	19.00	(8.573)	(9.573)	1.00	15.00	13.50	13.50	do	6.80	6.80
19.00	28.00	(9.573)	(10.573)	1.00	16.00	23.50	23.50	do	6.80	6.80
28.00	45.00	(10.573)	(11.573)	1.00	17.00	36.50	36.50	do	6.80	6.80
45.00	50.00	(11.573)	(12.573)	1.00	18.00	47.50	47.50	do	6.80	6.80
50.00	34.00	(12.573)	(13.573)	1.00	19.00	42.00	42.00	do	6.80	6.80
34.00	35.00	(13.573)	(14.573)	1.00	20.00	34.50	34.50	do	6.80	6.80
35.00	28.00	(14.573)	(15.573)	1.00	21.00	31.50	31.50	do	6.80	6.80
28.00	24.00	(15.573)	(16.573)	1.00	22.00	26.00	26.00	do	6.80	6.80
24.00	42.00	(16.573)	(17.573)	1.00	23.00	33.00	33.00	do	6.80	6.80
42.00	37.00	(17.573)	(18.573)	1.00	24.00	39.50	39.50	do	6.80	6.80
37.00	36.00	(18.573)	(19.573)	1.00	25.00	36.50	36.50	do	6.80	6.80
				25.00			472.50		167.20	167.20

N − value average = 472.50 : 25.00 = 18.90

Material is fine sand

Ru = Ultimate bearing capacity of the pile
li = statum thickness with the skin friction power taken into account (m)
fi = maximum unit area skin friction power of statum with the skin friction power taken into account (t/m2)

N1 = 50.00
N2' = 40.00

$$N' = \frac{N1 + N2'}{2}$$

N2' = 40.00

$$N' = \frac{50.00 + 40.00}{2}$$

= 45.00 < 40
= 40.00

4.D = 4.00 x 0.40 = 1.60 m
l = 0.50 x 1.60 = 0.80 m
l/D = 0.80 : 0.40 = 2.00
qd/N = 8.00
qd = 8.00 x N
= 8.00 x 40.00
= 320.00 ton/m2
A = 0.25.@pi.d^2
qd.A = 320 x 0.1257
= 40.21
U = 2 x @pi x ro
= 2.00 x 3.14 x 0.20
= 1.26 m
Ru = qd.A + U.(total li.fi)
= 40.21 + 1.26 x 167.20
= 250.322 ton

axl−alw

Lp	=	19.00	m
Lc	=	6.33	m
Y soil	=	2.00	t/m3

Ws = Effective weight of soil which replace by pile

= 0.25 x @pi x do^2 x Lp x Ysoil

= 0.25 x 3.14 x 0.16 x 19.00 x 2.00

= 4.78 ton

W = Effective weight of concrete which filled in the pile

= 0.25 x @pi x di^2 x Lc x Y concrete

= 0.25 x 3.14 x 0.06 x 6.33 x 2.50

= 0.78 ton

Normal condition,

Force bearing capacity of a pile in abutment

Permanent load safety factor Sn = 3.00

Temporary load safety factor Sq = 2.00

$$Ran = \frac{1}{Sn} \times (Ru - Ws) + Ws - W$$

$$= \frac{1.00}{3.00} \times (250.32 - 4.78) + 4.78 - 0.78$$

$$= 0.33 \times (245.55) + 4.00$$

= 81.85 + 4.00

= 85.85 ton/nos

b. by material

Rp = area of pile x compressive stress

= (765.7632 x 350.00) / 3.00 SF = 3.00

= 89,339.04 kg

= 89.34 ton

R minimum = 85.85 ton

$$Raq = \frac{1.00}{2.00} \times (250.32 - 4.78) + 4.78 - 0.78$$

$$= 0.50 \times (245.55) + 4.00$$

= 122.77 + 4.00

= 126.77 ton/nos

number of piles

Case		V ton	H ton	M ton.m	Allowance bearing a pile Vertical	Horizontal	Nos of pile Vertical	Horizontal
	Normal condition							
Case-I	HWl	1125.69	10.04	-182.81	85.85	29.99	13.11	0.33
Case-II	LWL	1272.90	10.04	-53.97	85.85	29.99	14.83	0.33
	Earth quake condition							
Case-III	HWl	1125.69	171.30	(562.61)	126.77	32.15	8.88	5.33
Case-IV	LWL	1272.90	168.14	-366.09	126.77	32.15	10.04	5.23

axl-alw

Project : Medan Flood Control	Japan International Cooperation Agency (JICA)	Calculation sheet
Channel : Percut River		Date
Structure : Br. P-3		Nos of sheet
Station : Pe 115 + 06		Prepared by

IILB.3 Spring Constante of steel pipe pile

IILB.3.1 Normal condition

h	=	axial length of pile above the design groung surface
Beta	=	charateristic value of pile
k	=	coeficient of horozontal sub grade reaction (kg/cm^2)
IE	=	flexural rigidity of pile
K1,K2,K3&	=	spring constante
Kv	=	Axial force (axial spring constante)
t	=	thick of steel pipe before corrotion (cm)
t'	=	thick of steel pipe corrosion (cm)
te	=	thick of steel pipe after corrosion (cm)

d	=	40.64	cm	
t	=	1.031	cm	
t'	=	0.103	cm	
te	=	1.0310	-	0.1031
	=	0.9279	cm	
de	=	d	- 2 x te	
	=	40.64	-	1.8558
	=	38.78	cm	
de^2	=	1,504.21	cm2	
di	=	(de - (2 x te)	cm	
	=	38.78	-	1.8558
	=	36.93	cm	
di^2	=	1,363.71	cm2	
de^2 - di	=	1,504.21	-	1,363.71
	=	140.51	cm2	
de^4	=	2,262,660	cm4	
di^4	=	1,859,696	cm4	
de^4 - di^4	=	2,262,660	-	1,859,696
	=	402,964	cm4	

Modulus Elasticity

Permanent load

Ec (K-225	=	257,495	kg/cm2
Es	=	1,897,200	kg/cm2

$$1/n = \frac{257,495}{1,897,200} = 0.1357$$

dt = di x 1/n

= 36.9284 x 0.1357

= 5.0121 cm

dt^2 = 25.1207 cm2

Ixc = @pi/64 x (dt^4)

= 0.0491 x 631

= 30.98 cm^4

Ixc = @pi/64 x (de^4 - di^4)

= 0.04909 x 402,964

= 19,780 cm4

I tot. = Ixc + Ixc

= 30.9767 + 19,780.46

= 19,811.44 cm4

= 0.000198114 m4

ks-n

As1	=	1/4 x 3.14 x dt^2				
	=	0.25	x	3.14	x	25.12
	=	19.73	cm2			
As2	=	1/4 3.14 (de^2 − di^2)				
	=	0.25	x	3.14	x	140.51
	=	110.35	cm2			
A tot.	=	As1	+	As2		
	=	19.73	+	110.35		
	=	130.08	cm2			
	=	0.013008406	m2			
Lp	=	19.00	m			

$$Kv = a \times \frac{A\,tot.}{Le} \times Ep$$

$$a = 0.027 \times \frac{Le}{de} + 0.2$$

$$= 0.027 \times \frac{1{,}900.00}{38.7842} + 0.2$$

$$= 1.32270 + 0.2000$$

$$= 1.5227$$

Spring constante on axial force = Kv

$$Kv = a \times \frac{A\,tot. \times Epile}{Lp}$$

$$= 1.52 \times \frac{130.08 \times 1{,}897{,}200}{1{,}900}$$

	=	1.52	x	129,892		
	=	197,787.57	kg/cm			
	=	19,779	ton/m			
EI	=	1,897,200	x	19,811		
	=	3.76E+10	kg.cm2			
	=	3,759	t.m2			
2.EI	=	2.00	x	3.76E+03		
	=	7,517	t.m2			
4.EI	=	4	x	3,759		
	=	15,035	t.m2			
Beta	=	0.00503058	cm−1			
Beta	=	0.503058	m−1			

Spring constante K1,K2 and K3

K1	=	4.EI.Beta^3				
	=	1.50E+04	x	0.127307		
	=	1,914	t/m			
K2=K3	=	2.EI.Beta^2				
	=	7,517	x	0.253067		
	=	1,902	t/rad			
K4	=	2.EI.Beta				
	=	7,517.25	x	0.503058		
	=	3,782	t.m/rad			

ks−n

Project : Medan Flood Control	Japan International Cooperation Agency (JICA)	Calculation sheet
Channel : Percut River		Date
Structure : Br. P−3		Nos of sheet
Station : Pe 115 + 06		Prepared by

III.B.3.2 Earthquake condition

h	=	axial length of pile above the design groung surface
Beta	=	charateristic value of pile
k	=	coeficient of horozontal sub grade reaction (kg/cm^2)
IE	=	flexural rigidity of pile
K1,K2,K3&	=	spring constante
Kv	=	Axial force (axial spring constante)
t	=	thick of steel pipe before corrotion (cm)
t'	=	thick of steel pipe corrosion (cm)
te	=	thick of steel pipe after corrosion (cm)

d	=	40.64	cm	
t	=	1.031	cm	
t'	=	0.103	cm	
te	=	1.0310	−	0.1031
	=	0.9279	cm	
de	=	d	− 2 x te	
	=	40.64	−	1.8558
	=	38.78	cm	
de^2	=	1,504.21	cm2	
di	=	(de − (2 x te)	cm	
	=	38.78	−	1.8558
	=	36.93	cm	
di^2	=	1,363.71	cm2	
de^2 − di	=	1,504.21	−	1,363.71
	=	140.51	cm2	
de^4	=	2,262,660	cm4	
di^4	=	1,859,696	cm4	
de^4 − di^	=	2,262,660	−	1,859,696
	=	402,964	cm4	

Modulus Elasticity

Temporary load

Ec (K−225	=	386,242	kg/cm2
Es	=	1,897,200	kg/cm2
1/n	=	386,242 / 1,897,200	= 0.2036
dt	=	di x 1/n	
	=	36.9284 x	0.2036
	=	7.5181	cm
dt^2	=	56.5215	cm2
I1	=	@pi/64 x (dt^4)	
	=	0.0491 x	3,195
	=	156.82	cm^4
I2	=	@pi/64 x (de^4 − di^4)	
	=	0.04909 x	402,964
	=	19,780	cm4
I tot.	=	I1 +	I2
	=	157 +	19,780.46
	=	19,937.28	cm4
	=	0.00019	m4

ks−q

As1 = 1/4 x 3.14 x dt^2
= 0.25 x 3.14 x 56.52
= 44.39 cm2

As2 = 1/4.3.14.(de^2-di^2)
= 0.25 x 3.14 x 140.51
= 110.35 cm2

A tot. = As1 + As2
= 44.39 + 110.35
= 154.75 cm2
= 0.01547 m2

Lp = 19.00 m

$$Kv = a \times \frac{A\ tot.}{Lp} \times Ep$$

$$a = 0.027 \times \frac{Lp}{de} + 0.2$$

$$= 0.027 \times \frac{1,900.00}{38.78} + 0.2$$

= 1.32270 + 0.2000

= 1.5227

Spring constante on axial force = Kv

$$Kv = a \times \frac{A\ tot. \times Epile}{Le}$$

$$= 1.52 \times \frac{154.75 \times 1,897,200}{1,900}$$

= 1.52 x 154,518
= 235,285.31 kg/cm
= 23,529 ton/m

EI = 1,897,200 x 19,937
= 3.78E+10 kg.cm2
= 3,783 t.m2

2.EI = 2 x 3.78E+03
= 7,565 t.m2

4.EI = 4 x 3,783
= 15,130 t.m2

Beta = 0.00477 cm-1

Beta = 0.47706 m-1

Spring constante K1,K2 and K3

K1 = 4.EI.Beta^3
= 1.51E+04 x 0.108576
= 1,643 t/m

K2=K3 = 2.EI.Beta^2
= 7,565 x 0.227591
= 1,722 t/rad

K4 = 2.EI.Beta
= 7,565.00 x 0.477066
= 3,609 t.m/rad

ks-q

Project : Medan Flood Control	Japan International Cooperation Agency (JICA)	Calculation sheet	
Channel : Percut River		Date	
Structure : Br. P-3		Nos of sheet	
Station : Pe 115 + 06		Prepared by	

III.B.4 Displacement of Head Pile

III.B.4.1 Normal Condition

Axx = tot.(K1 x cos^2 ø + Kv x sin^2 ø)
Axy = tot.(Kv - K1) x sin ø x cos ø)
Ayx = tot.(Kv - K1) x sin ø x cos ø)
Axa = tot.(KV - K1) x Xi x (sin ø x cos ø) - (K2 x cos ø))
Aax = tot.(KV - K1) x Xi x (sin ø x cos ø) - (K2 x cos ø))
Ayy = tot.(KV x cos^2 ø + (K1 x sin^2 ø))
Aya = tot.(KV x cos^2 ø + K1 x sin^2 ø) x Xi + K2 x sin ø)
Aay = tot.(KV x cos^2 ø + K1 x sin^2 ø) x Xi + K2 x sin ø)
Aaa = tot.(KV x cos^2 ø + K1 x sin^2 ø) x Xi^2 ^ + (K2 + K3).Xi sin ø + K4)

Abutment		Rows				Total
Nos. of row		(1)	(2)	(3)	(4)	
side		L/s	L/s	R/s	R/s	
sign		(-)	0	(+)	(+)	
angle		> 0	0	< 0	< 0	
Xi	=	(1.875)	(0.625)	0.625	1.875	
n	=	7.00	7.00	7.00	7.00	
angle degree	=	(5.7100)	0.0000	0.0000	5.71	
sin ø	=	(0.0995)	0.00	0.00	0.10	
cos ø	=	0.9950	1.0000	1.0000	0.9950	
sin ø x cos ø	=	(0.0990)	0.00	0.00	0.10	
sin^2 ø	=	0.0099	0.00	0.00	0.01	
cos^2 ø	=	0.9901	1.0000	1.0000	0.9901	
Xi^2	=	3.5156	0.3906	0.3906	3.5156	
K1	=	1,914	1,914	1,914	1,914	
K2	=	1,902	1,902	1,902	1,902	
K3	=	1,902	1,902	1,902	1,902	
K4	=	3,782	3,782	3,782	3,782	
Kv	=	19,779	19,779	19,779	19,779	
n.K1	=	13,398	13,398	13,398	13,398	
n.K2	=	13,314	13,314	13,314	13,314	
n.K3	=	13,314	13,314	13,314	13,314	
n.K4	=	26,474	26,474	26,474	26,474	
n.Kv	=	138,453	138,453	138,453	138,453	
n.(K2 + K3)	=	26,628	26,628	26,628	26,628	
Xi.(n.(K2 + K3))	=	(49,928)	(16,643)	16,643	49,928	
Xi.(n.(K2 + K3)).sin ø	=	4,967	0	0	4,967	
n.(Kv-K1)	=	125,055	125,055	125,055	125,055	
n.(Kv-K1).sin ø.cos ø	=	(12,380)	0	0	12,380	
n.K1.cos^2 ø	=	13,265	13,398	13,398	13,265	
n.Kv.sin^2 ø	=	1,371	0	0	1,371	
n.Kv.cos^2 ø	=	137,082	138,453	138,453	137,082	
n.K1.sin^2 ø	=	133	0	0	133	
n.K1.sin ø.cos ø	=	(1,326)	0	0	1,326	
n.Kv.sin ø.cos ø	=	(13,707)	0	0	13,707	
Xi.(n.K1.sin ø.cos ø)	=	2,487	0	0	2,487	
Xi.(n.Kv.sin ø.cos ø)	=	25,700	0	0	25,700	
n.K2.cos ø	=	13,248	13,314	13,314	13,248	
n.K2.sin ø	=	(1,325)	0	0	1,325	
n.K3.sin ø	=	(1,325)	0	0	1,325	
Xi.(n.Kv.cos ^2 ø)	=	(257,030)	(86,533)	86,533	257,030	
Xi.(n.K1.sin^2 ø)	=	(249)	0	0	249	
Xi^2.(n.Kv.cos ^2 ø)	=	481,931	54,083	54,083	481,931	
Xi^2.(n.K1.sin^2 ø)	=	466	0	0	466	
Xi.(n.K2.sin ø)	=	2,484	0	0	2,484	
Xi.(n.K3.sin ø)	=	2,484	0	0	2,484	

eoe-disn

Axx = tot.(K1 x cos^2 ø + Kv x sin ^2 ø)

n.K1.cos^2 ø	=	13,265	13,398	13,398	13,265	
n.Kv.sin^2 ø	=	1,371	0	0	1,371	
total		14,636	13,398	13,398	14,636	56,068

Axy = tot.(Kv – K1) x sin ø x cos ø)

n.(Kv–K1).sin ø.cosø	=	(12,380)	0	0	12,380	
A xy	=	(12,380)	0	0	12,380	0
A yx	=	(12,380)	0	0	12,380	0

Axa = tot.(KV – K1) x Xi x (sin ø x cos ø) – (K2 x cos ø))

Xi.(n.(Kv – K1).sin ø.cc	=	23,213	0	0	23,213	
– n.K2.cos ø	=	(13,248)	(13,314)	(13,314)	(13,248)	
Axa		9,965	(13,314)	(13,314)	9,965	(6,697)
Aax	=	9,965	(13,314)	(13,314)	9,965	(6,697)

Ayy = tot.(KV x cos ^2 ø + (K1 x sin^2 ø))

n.Kv.cos ^2 ø	=	137,082	138,453	138,453	137,082	
n.K1.sin^2 ø	=	133	0	0	133	
Ayy		137,215	138,453	138,453	137,215	551,336

Aya = tot.(KV x cos ^2 ø + K1 x sin^2 ø) x Xi + K2 x sin ø)

Xi.(n.Kv.cos ^2 ø)	=	(257,030)	(86,533)	86,533	257,030	
Xi.(n.K1.sin^2 ø)	=	(249)	0	0	249	
n.K2.sin ø	=	(1,325)	0	0	1,325	
Aya	=	(258,603)	(86,533)	86,533	258,603	0
Aay	=	(258,603)	(86,533)	86,533	258,603	0

Aaa = tot.(KV x cos ^2 ø + K1 x sin^2 ø) x Xi^2 ^ + (K2+K3) Xi sin ø + K4)

Xi^2.(n.Kv.cos ^2 ø)	=	481,931	54,083	54,083	481,931	
Xi^2.(n.K1.sin^2 ø)	=	466	0	0	466	
n.(K2+K3).Xi.sin ø	=	4,967	0	0	4,967	
n.K4	=	26,474	26,474	26,474	26,474	
Aaa		513,838	80,557	80,557	513,838	1,188,791

coe–disn

Project	: Medan Flood Control	Japan International Cooperation Agency (JICA)	Calculation sheet
Channel	: Percut River		Date
Structure	: Br. P–3		Nos of sheet
Station	: Pe 115 + 06		Prepared by

III.B.4.2 Earthquake condition

Axx = tot.(K1 x cos^2 ø + Kv x sin ^2 ø)
Axy = tot.(Kv – K1) x sin ø x cos ø)
Ayx = tot.(Kv – K1) x sin ø x cos ø)
Axa = tot.(KV – K1) x Xi x (sin ø x cos ø) – (K2 x cos ø))
Aax = tot.(KV – K1) x Xi x (sin ø x cos ø) – (K2 x cos ø))
Ayy = tot.(KV x cos ^2 ø + (K1 x sin^2 ø))
Aya = tot.(KV x cos ^2 ø + K1 x sin^2 ø) x Xi + K2 x sin ø)
Aay = tot.(KV x cos ^2 ø + K1 x sin^2 ø) x Xi + K2 x sin ø)
Aaa = tot.(KV x cos ^2 ø + K1 x sin^2 ø) x Xi^2 ^ + (K2 + K3).Xi sin ø + K4)

Nos. of row		Rows (1)	(2)	(3)	(4)	Total
side		L/s	L/s	R/s	R/s	
sign		(–)	(–)	(+)	(+)	
angle		> 0	0	< 0	< 0	
Xi	=	(1.875)	(0.625)	0.625	1.875	
n	=	7.00	7.00	7.00	7.00	
angle degree	=	(5.71)	0.0000	0.0000	5.71	
sin ø	=	(0.10)	0.00	0.00	0.10	
cos ø	=	0.9950	1.0000	1.0000	0.9950	
sin ø x cosø	=	(0.0990)	0.00	0.00	0.10	
sin^2 ø	=	0.0099	0.00	0.00	0.01	
cos^2 ø	=	0.9901	1.0000	1.0000	0.9901	
Xi^2	=	3.5156	0.3906	0.3906	3.5156	
K1	=	1,643.00	1,643.00	1,643.00	1,643.00	
K2	=	1,722.00	1,722.00	1,722.00	1,722.00	
K3	=	1,722.00	1,722.00	1,722.00	1,722.00	
K4	=	3,609.00	3,609.00	3,609.00	3,609.00	
Kv	=	23,529.00	23,529.00	23,529.00	23,529.00	
n.K1	=	11,501	11,501	11,501	11,501	
n.K2	=	12,054	12,054	12,054	12,054	
n.K3	=	12,054	12,054	12,054	12,054	
n.K4	=	25,263	25,263	25,263	25,263	
n.Kv	=	164,703	164,703	164,703	164,703	
n.(K2 + K3)	=	24,108	24,108	24,108	24,108	
Xi.(n.(K2 + K3))	=	(45,203)	(15,068)	15,068	45,203	
Xi.(n.(K2 + K3)).sin ø	=	4,497	0	0	4,497	
n.(Kv–K1)	=	153,202	153,202	153,202	153,202	
n.(Kv–K1).sin ø.cosø	=	(15,167)	0	0	15,167	
n.K1.cos^2 ø	=	11,387	11,501	11,501	11,387	
n.Kv.sin^2 ø	=	1,630	0	0	1,630	
n.Kv.cos^2 ø	=	163,073	164,703	164,703	163,073	
n.K1.sin^2 ø	=	114	0	0	114	
n.K1.sin ø.cosø	=	(1,139)	0	0	1,139	
n.Kv.sin ø.cosø	=	(16,306)	0	0	16,306	
Xi.(n.K1.sin ø.cos ø)	=	2,135	0	0	2,135	
Xi.(n.Kv.sin ø.cos ø)	=	30,573	0	0	30,573	
n.K2.cos ø	=	11,994	12,054	12,054	11,994	
n.K2.sin ø	=	(1,199)	0	0	1,199	
n.K3.sin ø	=	(1,199)	0	0	1,199	
Xi.(n.Kv.cos ^2 ø)	=	(305,761)	(102,939)	102,939	305,761	
Xi.(n.K1.sin^2 ø)	=	(213)	0	0	213	
Xi^2.(n.Kv.cos ^2 ø)	=	573,302	64,337	64,337	573,302	
Xi^2.(n.K1.sin^2 ø)	=	400	0	0	400	
Xi.(n.K2.sin ø)	=	2,249	0	0	2,249	
Xi.(n.K3.sin ø)	=	2,249	0	0		

coe–disq

Axx = tot.(K1 x cos ^2 ø + Kv x sin ^2 ø)						
n.K1.cos ^2 ø	=	11,387	11,501	11,501	11,387	
n.Kv.sin ^2 ø	=	1,630	0	0	1,630	
total		13,018	11,501	11,501	13,018	49,037
Axy = tot.(Kv − K1) x sin ø x cos ø)						
n.(Kv−K1).sin ø.cosø	=	(15,167)	0	0	15,167	
A xy	=	(15,167)	0	0	15,167	0
A yx	=	(15,167)	0	0	15,167	0
Axa = tot.(KV − K1) x Xi x (sin ø x cos ø) − (K2 x cos ø))						
Xi.(n.(Kv − K1).sin ø.α	=	28,438	0	0	28,438	
− n.K2.cos ø	=	(11,994)	(12,054)	(12,054)	(11,994)	
Axa		16,444	(12,054)	(12,054)	16,444	8,780
Aax	=	16,444	(12,054)	(12,054)	16,444	8,780
Ayy = tot.(KV x cos ^2 ø + (K1 x sin^2 ø))						
n.Kv.cos ^2 ø	=	163,073	164,703	164,703	163,073	
n.K1.sin ^2 ø	=	114	0	0	114	
Ayy		163,186	164,703	164,703	163,186	655,779
Aya = tot.(KV x cos ^2 ø + K1 x sin^2 ø) x Xi + K2 x sin ø)						
Xi.(n.Kv.cos ^2 ø)	=	(305,761)	(102,939)	102,939	305,761	
Xi.(n.K1.sin ^2 ø)	=	(213)	0	0	213	
n.K2.sin ø	=	(1,199)	0	0	1,199	
Aya	=	(307,174)	(102,939)	102,939	307,174	0
Aay	=	(307,174)	(102,939)	102,939	307,174	0
Aaa = tot.(KV x cos ^2 ø + K1 x sin^2 ø) x Xi ^2 ^ + (K2+K3) Xi sin ø + K4)						
Xi ^2.(n.Kv.cos ^2 ø)	=	573,302	64,337	64,337	573,302	
Xi ^2.(n.K1.sin ^2 ø)	=	400	0	0	400	
n.(K2+K3).Xi.sin ø	=	4,497	0	0	4,497	
n.K4	=	25,263	25,263	25,263	25,263	
Aaa		603,463	89,600	89,600	603,463	1,386,126

coe−disq

Project : Medan Flood Control	Japan International Cooperation Agency (JICA)	Calculation sheet
Channel : Percut River		Date
Structure : Br. P−3		Nos of sheet
Station : Pe 115 + 06 m		Prepared by

III.B.5 Coefficient displacement of loosing
III.B.5.1 Normal condition
Case − I High Water Level

Axx	dx	+	Axy	dy	+	Axa	dz	= H
Ayx	dx	+	Ayy	dy	+	Aay	dz	= V
Aax	dx	+	Aay	dy	+	Aaa	dz	= M

56,068	dx	+	0	dy	+	(8,697)	dz	= 10.04 H
0	dx	+	551,336	dy	+	0	dz	= 1,125.69 V
(8,697)	dx	+	0	dy	+	1,188,791	dz	= (182.81) M

det A

5.607E+04	551336	0 =
	0	1188791
0	0	0 =
	−8697	1188791
−8697	0	551336 =
	−8697	0

+	56068	x(	551336	x	1188791	−	0	x	0)	
	56068	x(	655423274776	−	0	)				= 3.67E+16
−	0	x(	0	x	1188791	−	−8697	x	0)	
	0	x(	0	−	0	)				= 0.00E+00
+	−8697	x(	0	x	0	−	−8697	x.	551336)	
	−8697	x(	0	−	3692297192	)				= −2.47E+13
										3.67E+16

$$\frac{1}{\det} = \frac{1}{3.67E+16}$$

Kolector

a11	5.51E+05	0.00E+00	+(	5.51E+05	x	1.19E+06	)−(	0.00E+00	x	0.00E+00	)=	C11
	0.00E+00	1.19E+06	+(	8.55E+11			)−(	0.00E+00	)		=	8.55E+11
a12	0.00E+00	0.00E+00	−(	0.00E+00	x	1.19E+06	)−(−8.70E+03	x	0.00E+00	)=	C12
	−8.70E+03	1.19E+06	−(	0.00E+00			)−(	0.00E+00	)		=	0.00E+00
a13	0.00E+00	5.51E+05	+(	0.00E+00	x	0.00E+00	)−(−8.70E+03	x	5.51E+05	)=	C13
	−8.70E+03	0.00E+00	+(	0.00E+00			)−(−3.69E+09	)		=	3.69E+09
a21	0.00E+00	−8.70E+03	−(	0.00E+00	x	1.19E+06	)−(	0.00E+00	x	−8.70E+03	)=	C21
	0.00E+00	1.19E+06	−(	0.00E+00			)−(	0.00E+00	)		=	0.00E+00
a22	5.61E+04	−8.70E+03	+(	5.61E+04	x	1.19E+06	− −8.70E+03	x	−8.70E+03	)=	C22
	−8.70E+03	1.19E+06	+(	8.67E+10			− 4.48E+07	)		=	8.66E+10
a23	5.61E+04	0.00E+00	+(	5.61E+04	x	0.00E+00	− −8.70E+03	x	0.00E+00	)=	C23
	−8.70E+03	0.00E+00	+(	0.00E+00			− 0.00E+00	)		=	0.00E+00
a31	0.00E+00	−8.70E+03	+(	0.00E+00	x	0.00E+00	− 5.51E+05	x	−8.70E+03	)=	C31
	5.51E+05	0.00E+00	+(	0.00E+00			− −3.69E+09	)		=	3.69E+09
a32	5.61E+04	−8.70E+03	−(	5.61E+04	x	0.00E+00	− 0.00E+00	x	−8.70E+03	)=	C32
	0.00E+00	0.00E+00	−(	0.00E+00			− 0.00E+00	)		=	0.00E+00
a33	5.61E+04	0.00E+00	+(	5.61E+04	x	5.51E+05	− 0.00E+00	x	0.00E+00	)=	C33
	0.00E+00	5.51E+05	+(	3.09E+10			− 0.00E+00	)		=	3.09E+10

C =

8.55E+11	0.00E+00	3.69E+09
0.00E+00	8.66E+10	0.00E+00
3.69E+09	0.00E+00	3.09E+10

Adj C = C t =

8.55E+11	0.00E+00	3.69E+09
0.00E+00	8.66E+10	0.00E+00
3.69E+09	0.00E+00	3.09E+10

$$A^{-1} = \frac{\text{adj } A}{\det A} = \frac{1}{\det A} \times$$

8.55E+11	0.00E+00	3.69E+09
0.00E+00	8.66E+10	0.00E+00
3.69E+09	0.00E+00	3.09E+10

=

1.00E+01	1.13E+03	−1.83E+02
1.00E+01	1.13E+03	−1.83E+02
1.00E+01	1.13E+03	−1.83E+02

8.55E+11	x	1.00E+01	+	0.00E+00	x	1.13E+03	+	3.69E+09	x	−1.83E+02		
0.00E+00	x	1.00E+01	+	8.66E+10	x	1.13E+03	+	0.00E+00	x	−1.83E+02		
3.69E+09	x	1.00E+01	+	0.00E+00	x	1.13E+03	+	3.09E+10	x	−1.83E+02		
X = A^−1.b	=	1.00E+00 / 3.67E+16	x	6.56E+12	+	0.00E+00	+	−6.75E+11	=			
				0.00E+00	+	7.50E+13	+	0.00E+00				
				3.71E+10	+	0.00E+00	+	−5.65E+12				

$$X = \frac{1.00E+00}{3.67E+16} \times \begin{vmatrix} 5.91E+12 \\ 7.50E+13 \\ -5.61E+12 \end{vmatrix} = \begin{vmatrix} 1.61E-04 \\ 2.04E-03 \\ -1.53E-04 \end{vmatrix}$$

$$X = \begin{vmatrix} dx \\ dy \\ dz \end{vmatrix} = \begin{vmatrix} 0.00016061 \\ 0.00204175 \\ (0.00015287) \end{vmatrix}$$

Control

0.00	dx	+	551,336.00	dy	+	0.00	dz	= 1,125.69
0	x		0.0001606086		=	0		
551336	x		0.0020417495		=	1125.69		
0	x		−0.0001528722		=	0		
						1125.69	=	1125.69

def−h1

Project	: Medan Flood Control	Japan International Cooperation Agency (JICA)	Calculation sheet
Channel	: Perout River		Date
Structure	: Br. P-3		Nos of sheet
Station	: Pe 115 + 06		Prepared by

III.B.5.2 Normal condition
Case – II Low Water Level

Axx	dx	+	Axy	dy	+	Axz	dz	= H
Ayx	dx	+	Ayy	dy	+	Ayz	dz	= V
Azx	dx	+	Azy	dy	+	Azz	dz	= M

56,068	dx	+	0	dy	+	(6,697)dz	= 10.04 H
0	dx	+	551,336	dy	+	0 dz	= 1,272.90 V
(6,697)dx		+	0	dy	+	1,186,791 dz	= (53.97) M

det A

5.607E+04	551336	0 =
0	0	1186791
0	0	0 =
−6697	0	1186791
−6697	0	551336 =
	−6697	0

+	56068	x(	551336	x	1186791	−	0	x	0)	
	56068	x(	655423274778	−	0	)				= 3.67E+16
−	0	x(	0	x	1186791	−	−6697	x	0)	
	0	x(	0	−	0	)				= 0.00E+00
+	−6697	x(	0	x	0	−	−6697	x	551336)	
	−6697	x(	0	−	3692297192	)				= −2.47E+13
										3.67E+16

$$\frac{1}{\det} = \frac{1}{3.67E+16}$$

Kofactor

a11	5.51E+05	0.00E+00	+(	5.51E+05	x	1.19E+06	)−(	0.00E+00	x	0.00E+00	)=	C11
	0.00E+00	1.19E+06	+(	6.55E+11			)−(	0.00E+00	)		=	6.55E+11
a12	0.00E+00	0.00E+00	−(	0.00E+00	x	1.19E+06	)−(	−6.70E+03	x	0.00E+00	)=	C12
	−6.70E+03	1.19E+06	−(	0.00E+00			)−(	0.00E+00	)		=	0.00E+00
a13	0.00E+00	5.51E+05	+(	0.00E+00	x	0.00E+00	)−(	−6.70E+03	x	5.51E+05	)=	C13
	−6.70E+03	0.00E+00	+(	0.00E+00			)−(	−3.69E+09	)		=	3.69E+09
a21	0.00E+00	−6.70E+03	−(	0.00E+00	x	1.19E+06	)−(	0.00E+00	x	−6.70E+03	)=	C21
	0.00E+00	1.19E+06	−(	0.00E+00			)−(	0.00E+00	)		=	0.00E+00
a22	5.61E+04	−6.70E+03	+(	5.61E+04	x	1.19E+06	−	−6.70E+03	x	−6.70E+03	)=	C22
	−6.70E+03	1.19E+06	+(	6.67E+10			−	4.48E+07	)		=	6.66E+10
a23	5.61E+04	0.00E+00	+(	5.61E+04	x	0.00E+00	−	−6.70E+03	x	0.00E+00	)=	C23
	−6.70E+03	0.00E+00	+(	0.00E+00			−	0.00E+00	)		=	0.00E+00
a31	0.00E+00	−6.70E+03	+(	0.00E+00	x	0.00E+00	−	5.51E+05	x	−6.70E+03	)=	C31
	5.51E+05	0.00E+00	+(	0.00E+00			−	−3.69E+09	)		=	3.69E+09
a32	5.61E+04	−6.70E+03	−(	5.61E+04	x	0.00E+00	−	0.00E+00	x	−6.70E+03	)=	C32
	0.00E+00	0.00E+00	−(	0.00E+00			−	0.00E+00	)		=	0.00E+00
a33	5.61E+04	0.00E+00	+(	5.61E+04	x	5.51E+05	−	0.00E+00	x	0.00E+00	)=	C33
	0.00E+00	5.51E+05	+(	3.09E+10			−	0.00E+00	)		=	3.09E+10

C =

6.55E+11	0.00E+00	3.69E+09
0.00E+00	6.66E+10	0.00E+00
3.69E+09	0.00E+00	3.09E+10

Adj C = Ct =

6.55E+11	0.00E+00	3.69E+09
0.00E+00	6.66E+10	0.00E+00
3.69E+09	0.00E+00	3.09E+10

$$A^{-1} = \frac{adj\,A}{det\,A} = \frac{1}{det\,A} \times$$

6.55E+11	0.00E+00	3.69E+09
0.00E+00	6.66E+10	0.00E+00
3.69E+09	0.00E+00	3.09E+10

1.00E+01	0.00E+00	1.27E+03
1.00E+01	6.66E+10	1.27E+03
1.00E+01	0.00E+00	1.27E+03

1.00E+01	0.00E+00	−5.40E+01
1.00E+01	0.00E+00	−5.40E+01
1.00E+01	0.00E+00	−5.40E+01

$$X = A^{-1}.b = \frac{1.00E+00}{3.67E+16} \times$$

6.56E+12	0.00E+00	−1.99E+11
8.48E+13	0.00E+00	−1.67E+12
−1.63E+12	0.00E+00	

$$X = \frac{1.00E+00}{3.67E+16} \times \begin{vmatrix} 6.56E+12 \\ 8.48E+13 \\ -1.63E+12 \end{vmatrix} = \begin{vmatrix} 1.74E-04 \\ 2.31E-03 \\ -4.44E-05 \end{vmatrix}$$

$$X = \begin{vmatrix} dx \\ dy \\ dz \end{vmatrix} = \begin{matrix} 0.00017376 \\ 0.00230876 \\ (0.00004442) \end{matrix}$$

Control

0.00	dx	+	551,336.00	dy	+	0.00 dz	= 1,272.90
0	x		0.0001737825		=	0	
551336	x		0.0023087555		=	1272.9	
0	x		−0.0000444202		=	0	
						1272.9	= 1272.9

Project	: Medan Flood Control	Japan International Cooperation Agency (JICA)	Calculation sheet
Channel	: Perout River		Date
Structure	: Br. P-3		Nos of sheet
Station	: Pe 115 + 06 m		Prepared by

III.B.5.3 Eartquake condition
Case – III High Water Level

Axx	dx	+	Axy	dy	+	Axz	dz	= H
Ayx	dx	+	Ayy	dy	+	Ayz	dz	= V
Azx	dx	+	Azy	dy	+	Azz	dz	= M

49,037	dx	+	0	dy	+	8,780 dz	= 171.30 H
0	dx	+	655,779	dy	+	0 dz	= 1,125.69 V
8,780	dx	+	0	dy	+	1,386,126 dz	= (562.61) M

det A

4.904E+04	655779	0 =
0	0	1386126
0	0	0 =
8780	8780	1386126
8780	0	655779 =
	8780	0

+	49037	x(	655779	x	1386126	−	0	x	0)	
	49037	x(	908992322154	−	0	)				= 4.46E+16
−	0	x(	0	x	1386126	−	8780	x	0)	
	0	x(	0	−	0	)				= 0.00E+00
+	8780	x(	0	x	0	−	8780	x	655779)	
	8780	x(	0	−	−5.75E+09	)				= −5.06E+13
										4.45E+16

$$\frac{1}{\det} = \frac{1}{4.45E+16}$$

Kofactor

a11	6.56E+05	0.00E+00	+(	6.56E+05	x	1.39E+06	)−(	0.00E+00	x	0.00E+00	)=	C11
	0.00E+00	1.39E+06	+(	9.09E+11			)−(	0.00E+00	)		=	9.09E+11
a12	0.00E+00	0.00E+00	−(	0.00E+00	x	1.39E+06	)−(	8.78E+03	x	0.00E+00	)=	C12
	8.78E+03	1.39E+06	−(	0.00E+00			)−(	0.00E+00	)		=	0.00E+00
a13	0.00E+00	6.56E+05	+(	0.00E+00	x	0.00E+00	)−(	8.78E+03	x	6.56E+05	)=	C13
	8.78E+03	0.00E+00	+(	0.00E+00			)−(	5.76E+09	)		=	−5.76E+09
a21	0.00E+00	8.78E+03	−(	0.00E+00	x	1.39E+06	)−(	0.00E+00	x	8.78E+03	)=	C21
	0.00E+00	1.39E+06	−(	0.00E+00			)−(	0.00E+00	)		=	0.00E+00
a22	4.90E+04	8.78E+03	+(	4.90E+04	x	1.39E+06	−	8.78E+03	x	8.78E+03	)=	C22
	8.78E+03	1.39E+06	+(	6.80E+10			−	7.71E+07	)		=	6.79E+10
a23	4.90E+04	0.00E+00	+(	4.90E+04	x	0.00E+00	−	8.78E+03	x	0.00E+00	)=	C23
	8.78E+03	0.00E+00	+(	0.00E+00			−	0.00E+00	)		=	0.00E+00
a31	0.00E+00	8.78E+03	+(	0.00E+00	x	0.00E+00	−	6.56E+05	x	8.78E+03	)=	C31
	6.56E+05	0.00E+00	+(	0.00E+00			−	5.76E+09	)		=	−5.76E+09
a32	4.90E+04	8.78E+03	−(	4.90E+04	x	0.00E+00	−	0.00E+00	x	8.78E+03	)=	C32
	0.00E+00	0.00E+00	−(	0.00E+00			−	0.00E+00	)		=	0.00E+00
a33	4.90E+04	0.00E+00	+(	4.90E+04	x	6.56E+05	−	0.00E+00	x	0.00E+00	)=	C33
	0.00E+00	6.56E+05	+(	3.22E+10			−	0.00E+00	)		=	3.22E+10

C =

9.09E+11	0.00E+00	−5.76E+09
0.00E+00	6.79E+10	0.00E+00
−5.76E+09	0.00E+00	3.22E+10

Adj C = Ct =

9.09E+11	0.00E+00	−5.76E+09
0.00E+00	6.79E+10	0.00E+00
−5.76E+09	0.00E+00	3.22E+10

$$A^{-1} = \frac{adj\,A}{det\,A} = \frac{1}{det\,A} \times$$

9.09E+11	0.00E+00	−5.76E+09
0.00E+00	6.79E+10	0.00E+00
−5.76E+09	0.00E+00	3.22E+10

0.00E+00	−5.76E+09	1.71E+02
6.79E+10	0.00E+00	1.13E+03
0.00E+00	3.22E+10	−5.63E+02

1.71E+02	0.00E+00	1.13E+03
1.71E+02	0.00E+00	1.13E+03
1.71E+02	0.00E+00	1.13E+03

−5.76E+09	−5.63E+02	
0.00E+00	−5.63E+02	
3.22E+10	−5.63E+02	

$$X = A^{-1}.b = \frac{1.00E+00}{4.45E+16} \times$$

1.56E+14	0.00E+00	3.24E+12
7.84E+13	0.00E+00	
−9.86E+11	0.00E+00	−1.81E+13

$$X = \frac{1.00E+00}{4.45E+16} \times \begin{vmatrix} 1.56E+14 \\ 7.84E+13 \\ -1.81E+13 \end{vmatrix} = \begin{vmatrix} 3.57E-03 \\ 1.72E-03 \\ -4.26E-04 \end{vmatrix}$$

$$X = \begin{vmatrix} dx \\ dy \\ dz \end{vmatrix} = \begin{matrix} 0.00357000 \\ 0.00171657 \\ (0.00042650) \end{matrix}$$

Control

0.00	dx	+	655,779.00	dy	+	0.00 dz	= 1,125.69
0	x		0.0035700028		=	0	
655779	x		0.0017165691		=	1125.69	
0	x		−0.0004264997		=	0	
						1125.69	= 1125.69

Project	: Medan Flood Control	Japan International Cooperation Agency (JICA)	Calculation sheet
Channel	: Percut River		Date
Structure	: Br. P-3		Nos of sheet
Station	: Pe 115 + 06		Prepared by

III.B.5.4 Earthquake condition
Case – IV Low Water Level

Axx	dx	+	Axy	dy	+	Axz	dz	=	H
Ayx	dx	+	Ayy	dy	+	Ayz	dz	=	V
Azx	dx	+	Azy	dy	+	Azz	dz	=	M

49,037	dx	+	0	dy	+	8,780	dz	=	166.14 H
0	dx	+	855,779	dy	+	0	dz	=	1,272.90 V
8,780	dx	+	0	dy	+	1,386,126	dz	=	(366.09) M

det A

4.904E+04	855779	0
0	0	1386126
0	0	0
8780	0	1386126
8780	0	855779
	8780	0

+	49037	x(	855779	x	1386126	–	0	x	0)		
	49037	x(	908992322154	–	0	)				=	4.46E+16
–	0	x(	0	x	1386126	–	8780	x	0)		
	0	x(	0	–	0	)				=	0.00E+00
+	8780	x(	0	x	0	–	8780	x	855779)		
	8780	x(	0	–	−5.75E+09	)				=	−5.05E+13
											4.45E+16

$$\frac{1}{\det} = \frac{1}{4.45E+16}$$

Kofactor

a11	8.56E+05	0.00E+00	+(	8.56E+05	x	1.39E+06	)−(	0.00E+00	x	0.00E+00	)=	C11
	0.00E+00	1.39E+06	+(	8.09E+11			)−(	0.00E+00	)		=	8.09E+11
a12	0.00E+00	0.00E+00	−(	0.00E+00	x	1.39E+06	)−(	8.78E+03	x	0.00E+00	)=	C12
	8.78E+03	1.39E+06	−(	0.00E+00			)−(	0.00E+00	)		=	0.00E+00
a13	0.00E+00	8.56E+05	+(	0.00E+00	x	0.00E+00	)−(	8.78E+03	x	8.56E+05	)=	C13
	8.78E+03	0.00E+00	+(	0.00E+00			)−(	5.76E+09	)		=	−5.76E+09
a21	0.00E+00	8.78E+03	−(	0.00E+00	x	1.39E+06	)−(	0.00E+00	x	8.78E+03	)=	C21
	0.00E+00	1.39E+06	−(	0.00E+00			)−(	0.00E+00	)		=	0.00E+00
a22	4.90E+04	8.78E+03	+(	4.90E+04	x	1.39E+06	−	8.78E+03	x	8.78E+03	)=	C22
	8.78E+03	1.39E+06	+(	6.80E+10			−	7.71E+07	)		=	6.79E+10
a23	4.90E+04	0.00E+00	+(	4.90E+04	x	0.00E+00	−	8.78E+03	x	0.00E+00	)=	C23
	8.78E+03	0.00E+00	+(	0.00E+00			−	0.00E+00	)		=	0.00E+00
a31	0.00E+00	8.78E+03	+(	0.00E+00	x	0.00E+00	−	8.56E+05	x	8.78E+03	)=	C31
	8.56E+05	0.00E+00	+(	0.00E+00			−	5.76E+09	)		=	−5.76E+09
a32	4.90E+04	8.78E+03	−(	4.90E+04	x	0.00E+00	−	0.00E+00	x	8.78E+03	)=	C32
	0.00E+00	0.00E+00	−(	0.00E+00			−	0.00E+00	)		=	0.00E+00
a33	4.90E+04	0.00E+00	+(	4.90E+04	x	8.56E+05	−	0.00E+00	x	0.00E+00	)=	C33
	0.00E+00	8.56E+05	+(	3.22E+10			−	0.00E+00	)		=	3.22E+10

C =

8.09E+11	0.00E+00	−5.76E+09
0.00E+00	8.79E+10	0.00E+00
−5.76E+09	0.00E+00	3.22E+10

Adj C = Ct =

8.09E+11	0.00E+00	−5.76E+09
0.00E+00	8.79E+10	0.00E+00
−5.76E+09	0.00E+00	3.22E+10

$$A^{-1} = \frac{\text{adj A}}{\det A} = \frac{1}{\det A} \times$$

8.09E+11	0.00E+00	1.68E+02
0.00E+00	8.79E+10	1.27E+03
−5.76E+09	0.00E+00	3.22E+10
		−3.66E+02

8.09E+11	x	1.68E+02	+	0.00E+00	x	1.27E+03	+	−5.76E+09	x	−3.66E+02		
0.00E+00	x	1.68E+02	+	8.79E+10	x	1.27E+03	+	0.00E+00	x	−3.66E+02		
−5.76E+09	x	1.68E+02	+	0.00E+00	x	1.27E+03	+	3.22E+10	x	−3.66E+02		

$$X = A^{-1}.b = \frac{1.00E+00}{4.45E+16} \times \begin{vmatrix} 1.53E+14 & + & 0.00E+00 & + & 2.11E+12 \\ 0.00E+00 & + & 8.64E+13 & + & 0.00E+00 \\ & & -8.68E+11 & + & 0.00E+00 \quad + \quad -1.18E+13 \end{vmatrix} =$$

$$X = \frac{1.00E+00}{4.45E+16} \times \begin{vmatrix} 1.55E+14 \\ 8.64E+13 \\ -1.27E+13 \end{vmatrix} = \begin{vmatrix} 3.48E-03 \\ 1.94E-03 \\ -2.86E-04 \end{vmatrix}$$

$$X = \begin{vmatrix} dx \\ dy \\ dz \end{vmatrix} = \begin{vmatrix} 0.00348007 \\ 0.00194105 \\ (0.00028615) \end{vmatrix}$$

Control

0.00	dx	+	855,779.00	dy	+	0.00	dz	= 1,272.90
0	x		0.0034800748		=	0		
855779	x		0.0019410503		=	1272.9		
0	x		−0.0002861537		=	0		
						1272.9	=	1272.9

def-h4

Project	: Medan Flood Control	Japan International Cooperation Agency (JICA)	Calculation sheet
Channel	: Percut River		Date
Structure	: Br. P 3		Nos of sheet
Station	: Pe 115 + 06		Prepared by

III.B.7 Control stresses on pile
III.B.7.1 Normal Condition
Case – II Low Water Level

Steel pipe pile dia.400 mm

Depth embedded of pile = 19.00 m

Axial load Vi = 43.920 ton
= 43,920 kg

Moment Mi = 0.080 t.m
= 8,000 kg.cm

diameter do = 40.00 cm

outer radius ro = 20.00 cm

M' = Mx + Vi x ro
= 8,000 + 43,920 x 20.00
= 8,000 + 878,400
= 886,400 kg.cm

excentrisitas $e = \frac{Mx}{Vi}$

$= \frac{8,000 \text{ kg.cm}}{43,920 \text{ kg}}$

= 0.18 cm

concrete covering a' = 2.50 cm
t = 1.03 cm

Inner diameter di = 40.00 − 2.06
= 37.94

inner radius ri = 18.97 cm

ro^2 = 400.00

ri^2 = 359.86

ro^2−ri^2 = 400.00 − 359.86

ro^2−ri^2 = 40.14 cm2

area of steel bar

As = 8 ø 16 -- Ø 16

8.00 x 2.0106 = 16.08 cm2

As = 16.08 cm2

$Ys = \frac{\text{Area of bar.Y bar}}{\text{Area of bar}}$

$= \frac{16.08 \times 18.97}{16.08}$

$= \frac{305.13}{16.08}$

= 18.97 cm

$n = \frac{1,897,200}{257,495}$

= 7.37

$p = \frac{\text{tot.A rea of steel bar}}{@pi.ro^2}$

$= \frac{16.08}{3.14 \times 400.00}$

$= \frac{16.08}{1,256.64}$

teg-n

p = 0.01280

n.p = 7.37 x 0.01280

= 1.54810

alpa = ri / ro = 18.97 / 20.00 = 0.95

e = 0.18 cm

e / ro = 0.18 / 20.00 = 0.0091

$$\frac{e}{ro} = \frac{pi/4 - (5/12 - 1/6.\cos^2 pi)\sin pi.\cos pi + (n.@pi.p)/2.(ri/ro)^2}{\sin pi/3.(2 + \cos^2 pi) - pi.\cos pi - n.@pi.p \cos pi}$$

trial value of pi --->>>>

pi	=	152.1261 degree
pi	=	2.6551 rad.

e = pi/4 − (5/12 − 1/6.cos^2 pi)sin pi.cos pi + (n.@pi.p)/2.(alpa)^2

pi/4 = A	=	2.6551	:	4.00	=	0.66
n	=	7.37				
alpa	=	0.95 cm				
alpa^2	=	0.90 cm^2				
cos pi	=	(0.883979)				
Sin pi	=	0.467527				
Cos^2 pi	=	0.781418				
1/6.cos^2 pi	=	0.166667	x	0.781418	=	0.13024
(5/12 − 1/6.cos^2 pi)	=	0.416667	−	0.130236	=	0.286430
Sin pi cos pi	=	0.467527	x	(0.883979)	=	(0.41)
(5/12 − 1/6.cos^2 pi) x sin pi.cos pi = B	=	0.28643	x	(0.88398)	=	(0.25320)
(n.@pi.p)	=	1.55	x	3.14	=	4.86
(n.@pi.p)/2	=	4.86	:	2.00	=	2.43
(n.@pi.p)/2 x (alpa)^2 = C	=	2.43	x	0.90	=	2.19
sum A − B + C	=	0.66	−	(0.25) +	2.19	= 3.10

ro = sin pi/3.(2 + cos^2 pi)−pi.cos pi − n.@pi.p cos pi

(Sin pi)/3	=	0.156				
(2 + cos^2 pi)	=	2.000	+	0.781	=	2.781
sin ø /3 x (2 + cos^2 pi)	=	0.156	x	2.781	=	0.433
pi.cos pi	=	2.655	x	(0.884)	=	(2.347)
n.@pi.p	=	1.548	x	3.142	=	4.864
n.@pi.p cos pi	=	4.864	x	(0.884)	=	(4.299)
					=	7.080

e = 3.10

e / ro = 3.10 / 7.08

pi = 152.13 rad

e / ro = 0.4385 = 0.0091

$$C = \frac{1 - \cos pi}{2\sin^3 pi/3 - pi\cos pi + \sin pi\cos^2 pi + pi/4 - \sin pi.\cos pi/4 - \sin^3.pi.\cos pi/6 \ @pi.np.(alpa^2/2 - \cos pi)}$$

Cos pi	=	(0.884)				
sin pi	=	0.468				
sin^3 pi	=	0.102				
sin pi.cos pi	=	0.468	x	(0.884)	=	(0.413)
Cos^2pi	=	0.781				
1 − cos pi	=	1.000	−	(0.884)	=	1.884
2.sin^3 pi	=	2.000	x	0.102	=	0.204
2.sin^3 pi/3 = A	=	0.204	:	3.000	=	0.068
pi.cos pi = B	=	2.655	x	(0.884)	=	(2.347)

sin pi.cos^2 pi = C	=	0.468	x	0.781	=	0.365
pi/4 = D	=	0.664			=	0.664
Cos pi/4	=	(0.884)	:	4.000 =	(0.221)	
sin pi.cos pi/4 = E	=	0.468	x	(0.221)	=	(0.103)
(sin^3 pi.cos pi)	=	0.102	x	(0.884) =	(0.090)	
(sin^3 pi.cos pi)/6 = F	=	(0.090)	:	6.000	=	(0.015)
n.p	=	1.548				
@pi.np	=	3.142	x	1.548 =	4.864	
alpa	=	0.948				
alpa^2	=	0.900				
alpa^2/2	=	0.900	:	2.000 =	0.450	
alpa^2/2−cos pi	=	0.450	−	(0.884) =	1.334	
@pi.np x alpa^2/2	=	4.864	x	0.450 =	2.188	
@pi.np x alpa^2/2−cos ø = G	=	2.188	−	(0.884)	=	3.072
sum = A − B + C + D − E − F + G					=	6.634

$$C = \frac{1 - \cos pi}{2\sin^3 pi/3 - pi\cos pi + \sin pi\cos^2 pi + pi/4 - \sin pi.\cos pi/4 - \sin^3.pi.\cos pi/6 \ @pi.np.(alpa^2/2 - \cos pi)}$$

C = 1.883979 / 6.634 = 0.28397

$$S = C \times \frac{alpa + \cos pi}{1 - \cos pi}$$

$$= 0.284 \times \frac{0.948 + (0.884)}{1.884}$$

= 0.284 x 0.034

= 0.010

M' = 886.400 kg.cm

ro = 20.000 cm

stres on concrete = fc

$$fc = \frac{M'}{ro^3} \times C$$

$$= \frac{886.400}{8.000} \times 0.284$$

= 110.800 x 0.284

= 31.46 kg/cm2 > 70 kg/cm2

stres on steel = fs

$$fs = \frac{M'}{ro^3} \times S \times n$$

$$= \frac{886.400}{8.000} \times 0.010 \times 7\ kg/cm2$$

= 110.800 x 0.010 x 7 kg/cm2

= 8 kg/cm2

Project : Medan Flood Control	Japan International Cooperation Agency (JICA)	Calculation sheet	
Channel : Percut River		Date	
Structure : Br. P 3		Nos of sheet	
Station : Pe 115 + 06		Prepared by	

III.B.7 Control stresses on pile
III.B.7.2 Earthquake Condition
Case – IV Low Water Level

Steel pipe pile dia.400 mm
Depth embedded of pile = 19.00 m

Axial load Vi = 52.550 ton
= 52,550 kg

Moment Mi = 7.510 t.m
= 751,000 kg.cm

diameter do = 40.00 cm
outer radius ro = 20.00 cm

M' = Mx + Vi x ro
= 751,000 + 52,550 x 20.00
= 751,000 + 1,051,000
= 1,802,000 kg.cm

excentrisitas $e = \frac{Mx}{Vi} = \frac{751,000 \text{ kg.cm}}{52,550 \text{ kg}}$ = 14.29 cm

concrete covering s' = 2.50 cm
t = 1.03 cm

Inner diameter di = 40.00 – 2.06
= 37.94

inner radius ri = 18.97 cm

ro^2 = 400.00
ri^2 = 359.86
ro^2–ri^2 = 400.00 – 359.86
ro^2–ri^2 = 40.14 cm2

area of steel bar
As = 8 ø 16 --Ø 16
8.00 x 2.0106 = 16.08 cm2
As = 16.08 cm2

$Ys = \frac{\text{Area of bar.Y bar}}{\text{Area of bar}} = \frac{16.08 \times 18.97}{16.08} = \frac{305.13}{16.08}$
= 18.97 cm

$n = \frac{1,897.200}{257,495}$ = 7.37

$p = \frac{\text{tot.A rea of steel bar}}{@pi.ro^2} = \frac{3.14 \times 400.00}{16.08}$
= 1,256.64

p	=	0.01280				
n.p	=	7.37	x	0.01280		
	=	1.54810				
alpa	=	ri / ro	=	18.97 / 20.00	=	0.95
e	=	14.29 cm				
e/ro	=	14.29 / 20.00	=	0.7146		

$$\frac{e}{ro} = \frac{pi/4 - (5/12 - 1/6.\cos^2 pi)\sin pi.\cos pi + (n.@pi.p)/2.(ri/ro)^2}{\sin pi/3.(2 + \cos^2 pi) - pi.\cos pi - n.@pi.p \cos pi}$$

trial value of pi --->>>> pi = 119.1261 degree
pi = 2.0791 rad.

e = pi/4 – (5/12 – 1/6.cos^2 pi)sin pi.cos pi + (n.@pi.p)/2.(alpa)^2

pi/4 = A	=	2.0791	:	4.00	=	0.52
n	=	7.37				
alpa	=	0.95 cm				
alpa^2	=	0.90 cm^2				
cos pi	=	(0.486734)				
Sin pi	=	0.873550				
Cos^2 pi	=	0.236910				
1/6.cos^2 pi	=	0.166667	x	0.236910	=	0.03948
(5/12 – 1/6.cos^2 pi)	=	0.416667	–	0.039485	=	0.377182
Sin pi cos pi	=	0.873550	x	(0.486734)	=	(0.43)
(5/12 – 1/6.cos^2 pi) x sin pi.cos pi = B	=	0.37718	x	(0.48673)	=	(0.18359)
(n.@pi.p)	=	1.55	x	3.14	=	4.86
(n.@pi.p)/2	=	4.86	:	2.00	=	2.43
(n.@pi.p)/2 x (alpa)^2 = C	=	2.43	x	0.90	=	2.19
sum A – B + C	=	0.52	–	(0.18) +	2.19	= 2.89

ro = sin pi/3.(2 + cos^2 pi)–pi.cos pi – n.@pi.p cos pi

(Sin pi)/3	=	0.291				
(2 + cos^2 pi)	=	2.000	+	0.237	=	2.237
sin ø /3 x (2 + cos^2 pi)	=	0.291	x	2.237	=	0.651
pi.cos pi	=	2.079	x	(0.487)	=	(1.012)
n.@pi.p	=	1.548	x	3.142	=	4.864
n.@pi.p cos pi	=	4.864	x	(0.487)	=	(2.367)
					=	4.031

$\frac{e}{ro} = \frac{2.89}{4.03}$

pi = 119.13 rad

$\frac{e}{ro} = 0.7173$ $\frac{e}{ro} = 0.7146$

$$C = \frac{1 - \cos pi}{2\sin^3 pi/3 - pi\cos pi + \sin pi\cos^2 pi + pi/4 - \sin pi.\cos pi/4 - \sin^3 pi.\cos pi/6 \; @pi.np.(alpa^2/2 - \cos pi)}$$

Cos pi	=	(0.487)				
sin pi	=	0.874				
sin^3 pi	=	0.667				
sin pi.cos pi	=	0.874	x	(0.487)	=	(0.425)
Cos ^ 2pi	=	0.237				
1 – cos pi	=	1.000	–	(0.487)	=	1.487
2.sin^3 pi	=	2.000	x	0.667	=	1.333
2.sin^3 pi/3 = A	=	1.333	:	3.000	=	0.444
pi.cos pi = B	=	2.079	x	(0.487)	=	(1.012)

teg–n

sin pi.cos ^2.pi = C	=	0.874	x	0.237		=	0.207
pi/4 = D	=	0.520				=	0.520
Cos pi/4	=	(0.487)	:	4.000	=	(0.122)	
sin pi.cos pi/4 = E	=	0.874	x	(0.122)		=	(0.106)
(sin ^3 pi.cos pi)	=	0.667	x	(0.487)	=	(0.324)	
(sin ^3 pi.cos pi)/6 = F	=	(0.324)	:	6.000		=	(0.054)
n.p	=	1.548					
@pi.np	=	3.142	x	1.548	=	4.864	
alpa	=	0.948					
alpa ^2	=	0.900					
alpa ^2/2	=	0.900	:	2.000	=	0.450	
alpa ^2/2−cos pi	=	0.450	−	(0.487)	=	0.937	
@pi.np x alpa ^2/2	=	4.864	x	0.450	=	2.188	
@pi.np x alpa ^2/2−cos ø = G	=	2.188	−	(0.487)		=	2.674
sum = A − B + C + D − E − F + G						=	5.018

$$C = \frac{1 - \cos pi}{2 \sin^3 pi/3 - pi \cos pi + \sin pi \cos^2 pi + pi/4 - \sin pi.\cos pi/4 - \sin^3 pi.\cos pi/6 \ @pi.np.(alpa^2/2 - \cos pi)}$$

$$C = \frac{1.486734}{5.018} = 0.29628$$

$$S = C \times \frac{alpa + \cos pi}{1 - \cos pi}$$

$$= 0.296 \times \frac{0.948 + (0.487)}{1.487}$$

$$= 0.296 \times 0.311$$

$$= 0.092$$

M' = 1,802,000 kg.cm

ro = 20.000 cm

stres on concrete = fc

$$fc = \frac{M'}{ro^3} \times C$$

$$= \frac{1,802,000}{8,000} \times 0.296$$

$$= 225.250 \times 0.296$$

$$= 66.74 \text{ kg/cm2} > 70 \text{ kg/cm2}$$

stres on steel = fs

$$fs = \frac{M'}{ro^3} \times S \times n$$

$$= \frac{1,802,000}{8,000} \times 0.092 \times 7 \text{ kg/cm2}$$

$$= 225.250 \times 0.092 \times 7 \text{ kg/cm2}$$

$$= 153 \text{ kg/cm2}$$

Project : Medan Flood Control	Japan International Cooperation Agency (JICA)	Calculation sheet
Channel : Percut River		Date
Structur : Br. P−3		Nos of sheet
Station : Pe 115 + 06		Prepared by

III.B.6 Combined load at Pier section

III.B.6.1 Normal condition

High water level

width of foot = 10 m

Total weight

Description	Dead load	Line load	Uniform load	Pedestrian load	total ton
	total load				
		L/s span =	16.00		
Total weight	203.09	27.27	99.20	9.60	339.16
Reaction to pier	101.55	13.64	49.60	4.80	169.58
Load per m width	10.15	1.36	4.96	0.48	16.96
		R/s span =	40.00		
Total weight	800.51	27.27	247.79	24.00	1,099.57
Reaction to pier	400.26	13.64	123.90	12.00	549.79
Load per m width	40.03	1.36	12.39	1.20	54.98
Total load to pier	50.18	2.73	17.35	1.68	71.94

Breking forces L/s = 5 % x "D" load (SNI No.1725−1989−F).Dep.PU

Breaking forces L/s = 0.05 x 6.3235 = 0.31617 ton

Breaking forces R/s = 0.05 x 13.753 = 0.68765 ton

Section 1 − 1

H1 = 1.05 m Ywet = 1.85 t/m3

W1 = 0.60 m Ysat = 2.00 t/m3

Yconcre = 2.40 t/m3 Yw = 1.00 t/m3

Pq.r = 5.98 ton

Load	Description Yc	x	H	x	W	=	Weight	Vo	Ho	Xo	Yo	M
	m		m		t/m3		ton	ton	ton	m	m	t.m
C3 =	2.40	x	1.05	x	0.60	=	1.512	1.512		0.300		0.454
C7 =	2.40	x	0.50	x	0.20	=	0.240	0.240		0.067		0.016
Pq =						=	5.984		5.984			
R.vr =						=	36.100	36.100		0.300		10.830
sum								37.852	5.984			11.300

Section 2 − 2

H1 =	0.25 m	W1 =	0.40 m	H4 =	0.50 m	W4 =	1.000 m				
H2 =	1.05 m	W2 =	0.60 m	H6 =	0.50 m	W6 =	0.200 m				
H3 =	1.00 m	W3 =	0.60 m	H7 =	0.50 m	W7 =	0.200 m				
Rv.l =	16.96 ton	Rv.r =	54.98 ton	H2+H6 =	1.55 m	H1+H7 =	1.500 m				
Pq.l =	0.00 ton	Pq.r =	0.00 ton								

Load	Description Y	x	H	x	W	=	Weight	Vo	Ho	Xo	Yo	Mx=Vo.X
	m		m		t/m3		ton	ton	ton	m	m	t.m
C1 =			2.40	x	0.25	x	0.40	=	0.240	0.240				
C2 =			2.40	x	1.05	x	0.60	=	1.512	1.512				
C3 =			2.40	x	1.00	x	0.60	=	1.440	1.440				
C4 =			2.40	x	0.50	x	1.00	=	1.200	1.200				
C6 =	0.50	x	2.40	x	0.50	x	0.20	=	0.120	0.120				
C7 =	0.50	x	2.40	x	0.50	x	0.20	=	0.120	0.120				
Pq.l								=	0.000		0.000		1.550	0.000
Pq.r								=	0.000		0.000		1.500	0.000
Rv.l								=	16.958	16.958				
Rv.r								=	54.979	54.979				
Breking forces L/s								=	0.316		0.316		1.550	0.490
Breking forces R/s								=	0.688		0.688		1.500	1.031
sum										76.569	1.004			1.522

Section 3 – 3

H1	=	0.25	m	W1	=	0.40	m	H6	=	0.50	m
H2	=	1.05	m	W2	=	0.60	m	H7	=	0.50	m
H3	=	1.00	m	W3	=	0.60	m	H8	=	3.40	m
H4	=	3.40	m	W4	=	1.00	m	H9	=	3.40	m
Pq.l	=	0.00	ton								
Pq.r	=	0.00	ton								

W6	=	0.200	m											
W7	=	0.200	m											
W8	=	0.200	m											
W9	=	0.200	m											
H2+H6+H4	=	4.950	m											
H3+H7+H4	=	4.900	m											

Load		Description												Weight	Vo	Ho	Xo	Yo	M
			Y		H		W												
			m		m		t/m3							ton	ton	ton	m	m	t.m
C1	=		2.40	x	0.25	x	0.40	=						0.240	0.240				
C2	=		2.40	x	1.05	x	0.60	=						1.512	1.512				
C3	=		2.40	x	1.00	x	0.60	=						1.440	1.440				
C4	=		2.40	x	0.50	x	1.00	=						1.200	1.200				
C8	=	0.50 x	2.40	x	0.50	x	0.20	=						0.120	0.120				
C9	=	0.50 x	2.40	x	0.50	x	0.20	=						0.120	0.120				
Pq.l								=						0.000		0.000		4.950	0.000
Pq.r								=						0.000		0.000		4.900	0.000
Rv.l								=						16.958	16.958				
Rv.r								=						54.979	54.979				
Breking forces L/s								=						0.316		0.316		4.950	1.565
Breking forces R/s								=						0.688		0.688		4.900	3.369
sum															76.569	1.004			4.935

Section 4 – 4

H1	=	0.30	m	W1	=	1.85 m
H2	=	1.00	m	W2	=	1.85 m
H wet	=	0.00	m			
H sat	=	3.80	m			

Load		Description												Weight	Vo	Ho	Xo	Yo	M = Vo.X
			Y		H		W												
			m		m		t/m3							ton	ton	ton	m	m	
C5r1	=	0.50 x	2.40	x	0.30	x	1.85	=						0.666	0.666		0.617		0.411
C5r2	=		2.40	x	1.00	x	1.85	=						4.440	4.440		0.925		4.107
Ewet.r	=		1.85	x	0.00	x	1.85	=						0.000	0.000		0.925		0.000
Esat.r	=		2.00	x	3.80	x	1.85	=						14.060	14.060		0.925		13.006
Rp.4								=						0.00	0.000		1.225		0.000
Rp.3								=						(36.06)	(36.060)		0.625		(22.538)
sum															(16.894)				(5.014)

Section 5 – 5

H1	=	0.30	m	W1	=	1.85 m
H2	=	1.00	m	W2	=	1.85 m
H wet	=	0.00	m			
H sat	=	3.80	m			

Load		Description												Weight	Vo	Ho	Xo	Yo	M = Vo.X
			Y		H		W												
			m		m		t/m3							ton	ton	ton	m	m	
C5.l1	=	0.50 x	2.40	x	0.30	x	1.85	=						0.666	0.666		0.617		0.411
C5.l2	=		2.40	x	1.00	x	1.85	=						4.440	4.440		0.925		4.107
Ewet.l	=		1.85	x	0.00	x	1.85	=						0.000	0.000		0.925		0.000
Esat.l	=		2.00	x	3.80	x	1.85	=						14.060	14.060		0.925		13.006
Rp.1								=						(22.66)	(22.660)		1.225		(27.759)
Rp.2								=						(28.72)	(28.720)		0.625		(10.235)
sum															(32.214)				(20.471)

Section 6 – 6

H1	=	1.00	m	W1	=	1.50 m
H2	=	1.35	m	W2	=	1.50 m
Length	=	1.60	m	Rv tot.	=	71.94 ton

Load		Description													Weight	Vo	Ho	Xo	Yo	M = Vo.X
			Y		H		W		L											
			m		m		m		m						ton	ton	ton	m	m	
C13	=		2.40	x	1.05	x	1.50	x	1.00	=					3.780	3.780		0.750		2.835
C14	=	0.50 x	2.40	x	1.00	x	1.50	x	1.00	=					1.800	1.800		0.500		0.900
Rv										=					71.94	71.937		0.000		0.000
Rservice										=					7.500	7.500		0.750		5.625
sum																85.017				9.360

Section 7 – 7

H1	=	1.00	m	W1	=	1.50 m
H2	=	1.00	m	W2	=	1.50 m
Back fill depth			=	3.80	m	

Load		Description												Weight	Vo	Ho	Xo	Yo	M = Vo.X
			Y		H		W												
			m		m		t/m3							ton	ton	ton	m	m	t.m
C15	=	0.50 x	2.40	x	1.00	x	1.50	=						1.800	1.800		0.500		0.900
C16	=		2.40	x	1.30	x	1.50	=						4.680	4.680		0.750		3.510
Ewet.	=		2.40	x	0.00	x	1.50	=						0.000	0.000		0.750		0.000
Esat.	=		2.40	x	3.80	x	1.50	=						13.680	13.680		0.750		10.260
Rp row1								=						(36.06)	(36.060)		0.700		(25.242)
Rp row2								=						(36.06)	(36.060)				
sum															(51.960)				(10.572)

Project : Medan Flood Control	Japan International Cooperation Agency (JICA)	Calculation sheet	
Channel : Percut River		Date	
Structur : Br. P-3		Nos of sheet	
Station : Pe 115 + 06		Prepared by	

III.B.8 Combined load at Pier section
III.B.8.2 Normal condition
Low water level

width of fool = 10 m

Total weight

Description	total load Dead load	Line load	Uniform load	Pedestrian load	total ton
		L/s span =	16.00		
Total weight	203.09	27.27	99.20	9.60	339.16
Reaction to pier	101.55	13.64	49.60	4.80	169.58
Load per m width	10.15	1.36	4.96	0.48	16.96
		R/s span =	40.00		
Total weight	800.51	27.27	247.79	24.00	1,099.57
Reaction to pier	400.26	13.64	123.90	12.00	549.79
Load per m width	40.03	1.36	12.39	1.20	54.98
Total load to pier	50.18	2.73	17.35	1.68	71.94

Breking forces L/s = 5 % x ' D ' load (SNI No.1725-1989-F).Dep.PU
Breaking forces L/s = 0.05 x 6.3235 = 0.31617 ton
Breaking forces R/s = 0.05 x 13.753 = 0.68765 ton

Section 1 - 1

H1 = 1.05 m Ywet = 1.85 t/m3
W1 = 0.60 m Ysat = 2.00 t/m3
Yconcre = 2.40 t/m3 Yw = 1.00 t/m3
Pq.r = 5.98 ton

Load	Description Yc	x	H	x	W	=	Weight	Vo	Ho	Xo	Yo	M
	m		m		t/m3		ton	ton	ton	m	m	t.m
C3 =	2.40	x	1.05	x	0.60	=	1.512	1.512		0.300		0.454
C7 =	2.40	x	0.50	x	0.20	=	0.240	0.240		0.067		0.016
Pq =						=	5.984		5.984			
R.vr =						=	36.100	36.100		0.300		10.830
sum								37.852	5.984			11.300

Section 2 - 2

H1 = 0.25 m W1 = 0.40 m H4 = 0.50 m W4 = 1.000 m
H2 = 1.05 m W2 = 0.60 m H6 = 0.50 m W6 = 0.200 m
H3 = 1.00 m W3 = 0.60 m H7 = 0.50 m W7 = 0.200 m
Rv.l = 16.96 ton Rv.r = 54.98 ton H2+H6 = 1.55 m H1+H7 = 1.500 m
Pq.l = 0.00 ton Pq.r = 0.00 ton

Load	Description Y	x	H	x	W	=	Weight	Vo	Ho	Xo	Yo	Mx=Vo.X
	m		m		t/m3		ton	ton	ton	m	m	t.m
C1 =	2.40	x	0.25	x	0.40	=	0.240	0.240				
C2 =	2.40	x	1.05	x	0.60	=	1.512	1.512				
C3 =	2.40	x	1.00	x	0.60	=	1.440	1.440				
C4 =	2.40	x	0.50	x	1.00	=	1.200	1.200				
C6 = 0.50	x 2.40	x	0.50	x	0.20	=	0.120	0.120				
C7 = 0.50	x 2.40	x	0.50	x	0.20	=	0.120	0.120				
Pq.l						=	0.000		0.000		1.550	0.000
Pq.r						=	0.000		0.000		1.500	0.000
Rv.l						=	16.958	16.958				
Rv.r						=	54.979	54.979				
Breking forces L/s						=	0.316		0.316		1.550	0.490
Breking forces R/s						=	0.688		0.688		1.500	1.031
sum								76.569	1.004			1.522

Section 3 - 3

H1 = 0.25 m W1 = 0.40 m H6 = 0.50 m W6 = 0.200 m
H2 = 1.05 m W2 = 0.60 m H7 = 0.50 m W7 = 0.200 m
H3 = 1.00 m W3 = 0.60 m H8 = 3.40 m W8 = 0.200 m
H4 = 3.40 m W4 = 1.00 m H9 = 3.40 m W9 = 0.200 m
Pq.l = 0.00 ton H2+H6+H4 = 4.950 m
Pq.r = 0.00 ton H3+H7+H4 = 4.900 m

Load	Description Y	x	H	x	W	=	Weight	Vo	Ho	Xo	Yo	M
	m		m		t/m3		ton	ton	ton	m	m	t.m
C1 =	2.40	x	0.25	x	0.40	=	0.240	0.240				
C2 =	2.40	x	1.05	x	0.60	=	1.512	1.512				
C3 =	2.40	x	1.00	x	0.60	=	1.440	1.440				
C4 =	2.40	x	0.50	x	1.00	=	1.200	1.200				
C8 = 0.50	x 2.40	x	0.50	x	0.20	=	0.120	0.120				
C9 = 0.50	x 2.40	x	0.50	x	0.20	=	0.120	0.120				
Pq.l						=	0.000		0.000		4.950	0.000
Pq.r						=	0.000		0.000		4.900	0.000
Rv.l						=	16.958	16.958				
Rv.r						=	54.979	54.979				
Breking forces L/s						=	0.316		0.316		4.950	1.565
Breking forces R/s						=	0.688		0.688		4.900	3.369
sum								76.569	1.004			4.935

Section 4 - 4

H1 = 0.30 m W1 = 1.85 m
H2 = 1.00 m W2 = 1.85 m
H wet = 0.00 m
H sat = 0.00 m

Load	Description Y	x	H	x	W	=	Weight	Vo	Ho	Xo	Yo	M = Vo.X
	m		m		t/m3		ton	ton	ton	m	m	
C5r1 = 0.50	x 2.40	x	0.30	x	1.85	=	0.666	0.666		0.617		0.411
C5r2 =	2.40	x	1.00	x	1.85	=	4.440	4.440		0.925		4.107
Ewet.r =	1.85	x	0.00	x	1.85	=	0.000	0.000		0.925		0.000
Esat.r =	2.00	x	0.00	x	1.85	=	0.000	0.000		0.925		0.000
Rp.4						=	0.00	0.000		1.225		0.000
Rp.3						=	(42.30)	(42.300)		0.625		(26.438)
sum								(37.194)				(21.920)

Section 5 - 5

H1 = 0.30 m W1 = 1.85 m
H2 = 1.00 m W2 = 1.85 m
H wet = 0.00 m
H sat = 0.00 m

Load	Description Y	x	H	x	W	=	Weight	Vo	Ho	Xo	Yo	M = Vo.X
	m		m		t/m3		ton	ton	ton	m	m	
C5.l1 = 0.50	x 2.40	x	0.30	x	1.85	=	0.666	0.666		0.617		0.411
C5.l2 =	2.40	x	1.00	x	1.85	=	4.440	4.440		0.925		4.107
Ewet.l =	1.85	x	0.00	x	1.85	=	0.000	0.000		0.925		0.000
Esat.l =	2.00	x	0.00	x	1.85	=	0.000	0.000		0.925		0.000
Rp.1						=	(24.85)	(24.850)		1.225		(30.441)
Rp.2						=	(31.98)	(31.980)		0.625		(25.924)
sum								(51.724)				(51.847)

Section 6 - 6

H1 = 1.00 m W1 = 1.50 m
H2 = 1.35 m W2 = 1.50 m
Length = 1.60 m Rv tot. = 71.94 ton

Load		Description Y	x	H	x	W	x	L	=	Weight	Vo	Ho	Xo	Yo	M = Vo.X
		m		m		m		m		ton	ton	ton	m	m	
C13	=	2.40	x	1.05	x	1.50	x	1.00	=	3.780	3.780		0.750		2.835
C14	=	0.50 x 2.40	x	1.00	x	1.50	x	1.00	=	1.800	1.800		0.500		0.900
Rv									=	71.94	71.937		0.000		0.000
Rservice									=	7.500	7.500		0.750		5.625
		sum									85.017				9.360

Section 7 – 7

H1 = 1.00 m W1 = 1.50 m
H2 = 1.00 m W2 = 1.50 m
Back fill depth = 0.00 m

Load		Description Y	x	H	x	W	=	Weight	Vo	Ho	Xo	Yo	M = Vo.X
		m		m		t/m3		ton	ton	ton	m	m	t.m
C15	=	0.50 x 2.40	x	1.00	x	1.50	=	1.800	1.800		0.500		0.900
C16	=	2.40	x	1.30	x	1.50	=	4.680	4.680		0.750		3.510
Ewet.	=	2.40	x	0.00	x	1.50	=	0.000	0.000		0.750		0.000
Esat.	=	2.40	x	0.00	x	1.50	=	0.000	0.000		0.750		0.000
Rp row1							=	(42.30)	(42.300)		0.700		(29.610)
Rp row2							=	(42.30)	(42.300)				
		sum							(78.120)				(25.200)

mqh-1

Project	: Medan Flood Control	Japan International Cooperation Agency (JICA)	Calculation sheet
Channel	: Percut River		Date
Structur	: Br. P-3		Nos of sheet
Station	: Pe 115 + 06		Prepared by

III.B.6 Combined load at Pier section
III.B.6.3 Earthquake condition
High water level

width of foot = 10 m

Total weight

Description	total load Dead load	Line load	Uniform load	Pedestrian load	total ton
		L/s span =	16.00		
Total weight	203.09	27.27	99.20	9.60	339.16
Reaction to pier	101.55	13.64	49.60	4.80	169.58
Load per m width	10.15	1.36	4.96	0.48	16.96
		R/s span =	40.00		
Total weight	800.51	27.27	247.79	24.00	1,099.57
Reaction to pier	400.26	13.64	123.90	12.00	549.79
Load per m width	40.03	1.36	12.39	1.20	54.98
Total load to pier	50.18	2.73	17.35	1.68	71.94

Breking forces L/s = 5 % x * D * load (SNI No.1725-1989-F).Dep.PU
Breaking forces L/s = 0.05 x 6.3235 = 0.31617 ton
Breaking forces R/s = 0.05 x 13.753 = 0.68765 ton

Section 1 – 1

H1 = 1.05 m Ywet = 1.85 t/m3
W1 = 0.60 m Ysat = 2.00 t/m3
Yconcre = 2.40 t/m3 Yw = 1.00 t/m3
Pq.r = 5.98 ton

Load		Description Yo	x	H	x	W	=	Weight	Vo	Ho	Xo	Yo	M
		m		m		t/m3		ton	ton	ton	m	m	t.m
C3	=	2.40	x	1.05	x	0.60	=	1.512	1.512		0.300		0.454
C7	=	2.40	x	0.50	x	0.20	=	0.240	0.240		0.067		0.016
Pq	=						=	5.984		5.984			
R.vr	=						=	36.100	36.100		0.300		10.830
		sum							37.852	5.984			11.300

Section 2 – 2

H1	= 0.25 m	W1	= 0.40 m	H4	= 0.50 m	W4	= 1.000 m				
H2	= 1.05 m	W2	= 0.60 m	H6	= 0.50 m	W6	= 0.200 m				
H3	= 1.00 m	W3	= 0.60 m	H7	= 0.50 m	W7	= 0.200 m				
Rv.l	= 16.96 ton	Rv.r	= 54.98 ton	H2+H6	= 1.55 m	H1+H7	= 1.500 m				
Pq.l	= 1.523 ton	Pq.r	= 6.004 ton								

Load		Description Y	x	H	x	W	=	Weight	Vo	Ho	Xo	Yo	Mx=Vo.X
		m		m		t/m3		ton	ton	ton	m	m	t.m
C1	=	2.40	x	0.25	x	0.40	=	0.240	0.240				
C2	=	2.40	x	1.05	x	0.60	=	1.512	1.512				
C3	=	2.40	x	1.00	x	0.60	=	1.440	1.440				
C4	=	2.40	x	0.50	x	1.00	=	1.200	1.200				
C6	= 0.50	x 2.40	x	0.50	x	0.20	=	0.120	0.120				
C7	= 0.50	x 2.40	x	0.50	x	0.20	=	0.120	0.120				
Pq.l							=	1.523		1.523		1.550	2.361
Pq.r							=	6.004		6.004		1.500	9.006
Rv.l							=	16.958	16.958				
Rv.r							=	54.979	54.979				
Breking forces L/s							=	0.316		0.316		1.550	0.490
Breking forces R/s							=	0.688		0.688		1.500	1.031
		sum							76.569	8.531			12.888

mqh-3

Section 3 – 3

H1	=	0.25	m	W1	=	0.40	m	H6	=	0.50	m
H2	=	1.05	m	W2	=	0.60	m	H7	=	0.50	m
H3	=	1.00	m	W3	=	0.60	m	H8	=	3.40	m
H4	=	3.40	m	W4	=	1.00	m	H9	=	3.40	m
Pq.l	=	1.523	ton								
Pq.r	=	6.004	ton								

| | | | | | | | | | | |

Project	: Medan Flood Control	Japan International Cooperation Agency (JICA)	Calculation sheet
Channel	: Percut River		Date
Structur	: Br. P-3		Nos of sheet
Station	: Pe 115 + 06		Prepared by

III.B.8 Combined load at Pier section
III.B.8.4 Earthquake condition
Low water level

width of foot = 10 m

Total weight

Description	Dead load	Line load	Uniform load	Pedestrian load	total ton
		L/s span =	16.00		
Total weight	203.09	27.27	99.20	9.60	339.16
Reaction to pier	101.55	13.64	49.60	4.80	169.58
Load per m width	10.15	1.36	4.96	0.48	16.96
		R/s span =	40.00		
Total weight	800.51	27.27	247.79	24.00	1,099.57
Reaction to pier	400.26	13.64	123.90	12.00	549.79
Load per m width	40.03	1.36	12.39	1.20	54.98
Total load to pier	50.18	2.73	17.35	1.68	71.94

Breking forces L/s = 5 % x "D "load (SNI No.1725-1989-F).Dep.PU
Breaking forces L/s = 0.05 x 6.3235 = 0.31617 ton
Breaking forces R/s = 0.05 x 13.753 = 0.68765 ton

Section 1 - 1

H1 = 1.05 m Ywet = 1.85 t/m3
W1 = 0.60 m Ysat = 2.00 t/m3
Yconcre = 2.40 t/m3 Yw = 1.00 t/m3
Pq.r = 5.98 ton

Load	Description Yc	x	H	x	W	=	Weight	Vo	Ho	Xo	Yo	M
	m		m		t/m3		ton	ton	ton	m	m	t.m
C3 =	2.40	x	1.05	x	0.60	=	1.512	1.512		0.300		0.454
C7 =	2.40	x	0.50	x	0.20	=	0.240	0.240		0.067		0.016
Pq =						=	5.984		5.984			
R w =						=	36.100	36.100		0.300		10.830
sum								37.852	5.984			11.300

Section 2 - 2

H1 =	0.25 m	W1 =	0.40 m	H4 =	0.50 m	W4 =	1.000 m					
H2 =	1.05 m	W2 =	0.60 m	H6 =	0.50 m	W6 =	0.200 m					
H3 =	1.00 m	W3 =	0.60 m	H7 =	0.50 m	W7 =	0.200 m					
Rv.l =	16.96 ton	Rv.r =	54.98 ton	H2+H6 =	1.55 m	H1+H7 =	1.500 m					
Pq.l =	1.523 ton	Pq.r =	6.004 ton									

Load	Description Y	x	H	x	W	=	Weight	Vo	Ho	Xo	Yo	Mx=Vo.X
	m		m		t/m3		ton	ton	ton	m	m	t.m
C1 =	2.40	x	0.25	x	0.40	=	0.240	0.240				
C2 =	2.40	x	1.05	x	0.60	=	1.512	1.512				
C3 =	2.40	x	1.00	x	0.60	=	1.440	1.440				
C4 =	2.40	x	0.50	x	1.00	=	1.200	1.200				
C6 = 0.50	x 2.40	x	0.50	x	0.20	=	0.120	0.120				
C7 = 0.50	x 2.40	x	0.50	x	0.20	=	0.120	0.120				
Pq.l						=	1.523		1.523		1.550	2.361
Pq.r						=	6.004		6.004		1.500	9.006
Rv.l						=	16.958	16.958				
Rv.r						=	54.979	54.979				
Breking forces L/s						=	0.316		0.316		1.550	0.490
Breking forces R/s						=	0.688		0.688		1.500	1.031
sum								76.569	8.531			12.888

mqh-4

Section 3 - 3

H1 =	0.25 m	W1 =	0.40 m	H6 =	0.50 m	W6 =	0.200 m					
H2 =	1.05 m	W2 =	0.60 m	H7 =	0.50 m	W7 =	0.200 m					
H3 =	1.00 m	W3 =	0.60 m	H8 =	3.40 m	W8 =	0.200 m					
H4 =	3.40 m	W4 =	1.00 m	H9 =	3.40 m	W9 =	0.200 m					
Pq.l =	1.523 ton				H2+H6+H4	=	4.950 m					
Pq.r =	6.004 ton				H3+H7+H4	=	4.900 m					

Load	Description Y	x	H	x	W	=	Weight	Vo	Ho	Xo	Yo	M
	m		m		t/m3		ton	ton	ton	m	m	t.m
C1 =	2.40	x	0.25	x	0.40	=	0.240	0.240				
C2 =	2.40	x	1.05	x	0.60	=	1.512	1.512				
C3 =	2.40	x	1.00	x	0.60	=	1.440	1.440				
C4 =	2.40	x	0.50	x	1.00	=	1.200	1.200				
C8 = 0.50	x 2.40	x	0.50	x	0.20	=	0.120	0.120				
C9 = 0.50	x 2.40	x	0.50	x	0.20	=	0.120	0.120				
Pq.l						=	1.523		1.523		4.950	7.539
Pq.r						=	6.004		6.004		4.900	29.420
Rv.l						=	16.958	16.958				
Rv.r						=	54.979	54.979				
Breking forces L/s						=	0.316		0.316		4.950	1.565
Breking forces R/s						=	0.688		0.688		4.900	3.369
sum								76.569	8.531			41.893

Section 4 - 4

H1 = 0.30 m W1 = 1.85 m
H2 = 1.00 m W2 = 1.85 m
H wet = 0.00 m
H sat = 0.00 m

Load	Description Y	x	H	x	W	=	Weight	Vo	Ho	Xo	Yo	M = Vo.X
	m		m		t/m3		ton	ton	ton	m	m	
C5r1 = 0.50	x 2.40	x	0.30	x	1.85	=	0.666	0.666		0.617		0.411
C5r2 =	2.40	x	1.00	x	1.85	=	4.440	4.440		0.925		4.107
Ewet.r =	1.85	x	0.00	x	1.85	=	0.000	0.000		0.925		0.000
Esat.r =	2.00	x	0.00	x	1.85	=	0.000	0.000		0.925		0.000
Rp.4						=	0.00	0.000		1.225		0.000
Rp.3						=	(39.44)	(39.440)		0.625		(24.650)
sum								(34.334)				(20.132)

Section 5 - 5

H1 = 0.30 m W1 = 1.85 m
H2 = 1.00 m W2 = 1.85 m
H wet = 0.00 m
H sat = 0.00 m

Load	Description Y	x	H	x	W	=	Weight	Vo	Ho	Xo	Yo	M = Vo.X
	m		m		t/m3		ton	ton	ton	m	m	
C5.l1 = 0.50	x 2.40	x	0.30	x	1.85	=	0.666	0.666		0.617		0.411
C5.l2 =	2.40	x	1.00	x	1.85	=	4.440	4.440		0.925		4.107
Ewet.l =	1.85	x	0.00	x	1.85	=	0.000	0.000		0.925		0.000
Esat.l =	2.00	x	0.00	x	1.85	=	0.000	0.000		0.925		0.000
Rp.1						=	(30.79)	(30.790)		1.225		(37.718)
Rp.2						=	(28.90)	(28.900)		0.625		(33.200)
sum								(54.584)				(66.400)

Section 6 - 6

H1 = 1.00 m W1 = 1.50 m
H2 = 1.35 m W2 = 1.50 m
Length = 1.60 m Rv tot. = 71.94 ton

mqh-4

| Load | Description | | |

Project	: Medan Flood Control	Japan International Cooperation Agency (JICA)	Calculation sheet	
Channel	: Percut River		Date	
Structure	: Br – P 3		Nos of sheet	
Station	: Pe 115 + 06		Prepared by	

III.B 10 Reinforcing steel bar of Pier section

Section – 3

Item		Describtion	unit	Normal condition Calcu–lation	Earth quake condition Calcu–lation
		Allowance stresses			
	concrete compressive	fc = K – 225	kg/cm2	*75*	*75*
	steel tensile	fs	kg/cm2	*1400*	*1400*
	concrete shear	tou without r.bar	kg/cm2	*8*	*8*
		tou with r.bar	kg/cm2	*20*	*20*
	transformend	n = Es/Ec		*21*	*21*
	Moment	M	t.m	4.935	41.893
			kg.cm	493,500	4,189,300
	Shear	S	ton	1.004	10.857
			kg	1004	10857
	Normal	N	ton	76.569	76.569
			kg	76,569	76,569
	dimension	b	cm	*100*	*100*
		ht	cm	*140*	*140*
		d'	cm	*10*	*10*
		h	cm	*130*	*130*
		b.h	cm2	*13,000*	*13,000*
		eo1=M/N	cm	6.45	54.71
		eo2=1/30.ht,> 2 cm	cm	4.67	4.67
		used eo2	cm	2.00	2.00
		eo=eo1+eo2	cm	8.45	56.71
		eo/ht (see table)		0.06	0.41
		C		4.40	4.40
		lk	cm	340	340
		100.ht	cm	14,000	14,000
		lk/100.ht	cm	0.0243	0.0243
		(lk/100.ht)^2	cm	*0.0006*	*0.0006*
		e1=C.[lk/(100.ht)]^2.ht	cm	*0.363*	*0.363*
		e2=0.15.ht	cm	*21.00*	*21.00*
		e=eo+e1+e2	cm	*29.81*	*78.08*
		ea=e+1/2.ht–d'	cm	69.81	138.08
		M' = N.ea	kg.cm	6,876,546	10,572,346
		n.M'	kg.cm	144,407,458	222,019,258
		b.fs	kg/cm	140,000	140,000
		n.M'/(b.fs)		1,031.48	1,585.85
		@sqrt(n.M'/(b.fs))		32.12	39.82
		Ca=h /@sqrt(n.M'/b.fs) see PBI 1971 N.I–2		*4.048*	*3.264*
		n.fc		1,575	1,575
		øo = fs / (n.fc)		0.8889	0.8889
		delta		0.40	0.40
		from table fined Ca		3.309	3.309
	Calculation for reinfor–cement bar with steel full working	fine ø > øo		2.030	2.030
		ø'		2.913	2.913
		ksi(j)		0.330	0.330
		zeta		0.892	0.892
		100 nw		10.23	10.23
		nw		0.1023	0.1023
		w		0.00487	0.00487
		ea/h		0.69	1.06
		from table fined i		4.43	3.210
		l.A = wbh		63.33	63.33
		A cm2		14.30	19.73
		A' =delta. cm2		25.331	25.331

bar

=	1.327		
=	10		
=	10 x 1.327		
=	13.27 cm >	25.33 cm2	

A' – used bar dia. 25 mm @ 12.5 cm,

Area @ bar	=	4.900	
nos of bar	=	10	
total area	=	10 x	4.900
(cm2)	=	49.00 cm2 >	25.33

			steel bar full warking
		n.ø	42.63
	tension of bar	fs	kg/cm2 1,400.00
	compressive concrete	fc' = fs / (n.e)	kg/cm2 32.84
	tensile of bar	fs' = fs / e'	kg/cm2 480.60
		7/8.b.h	cm2 11,375.00
	shear concrete	Tca = S / (7/8.b.h)	kg/cm2 0.09

Section – 5

Item		Describtion	unit	Normal condition Calcu–lation	Earth quake condition Calcu–lation
		Allowance stresses			
	concrete compressive	fc = K – 225	kg/cm2	*75*	*75*
	steel tensile	fs	kg/cm2	*1400*	*1400*
	concrete shear	tou without r.bar	kg/cm2	*8*	*8*
		tou with r.bar	kg/cm2	*20*	*20*
	transformend	n = Es/Ec		*21*	*21*
	Moment	M	t.m	51.847	66.40
			kg.cm	5,184,700	6,640,000
	Shear	S	ton	51.724	54.584
			kg	51724	54584
	dimension	b	cm	*100*	*100*
		ht	cm	*130*	*130*
		d'	cm	*10*	*10*
		h	cm	*120*	*120*
		b.h	cm2	*12,000*	*12,000*
		M	kg.cm	5,184,700	6,640,000
		n.M	kg.cm	106,876,700	139,440,000
		b.fs	kg/cm	140,000	140,000
		n.M / (b.fs)		777.71	996.00
		@sqrt(n.M /(b.fs))		27.89	31.56
		Ca=h /@sqrt(n.M/b.fs) see PBI 1971 N.I–2		*4.303*	*3.802*
		n.fc		1,575	1,575
		øo = fs / (n.fc)		0.8889	0.8889
		delta		0.60	0.60
		from table fined Ca		4.355	4.355
	Calculation for reinfor–cement bar with steel full working	fine ø > øo		2.704	2.704
		ø'		4.294	4.294
		ksi(j)		0.270	0.270
		zeta		0.907	0.907
		100 nw		6.099	6.099
		nw		0.06099	0.06099
		w		0.00290	0.00290
		A cm2		34.85	34.85
		A' =delta.i.A cm2		20.91	20.91

A – used bar dia. 25 mm @ 12.5 cm,

Area @ bar	=	4.900	
nos of bar	=	10	
total area	=	10 x	4.9
(cm2)	=	49.00 cm >	34.85 cm2

A' – used bar dia. 25 mm @ 12.5 cm,

Area @ bar	=	4.900	
nos of bar	=	10	
total area	=	10 x	4.900
(cm2)	=	49 cm2 >	20.91

			steel bar full warking
		n.ø	56.78
	tension of bar	fs	kg/cm2 1,400.00
	compressive concrete	fc' = fs / (n.ø)	kg/cm2 24.65
	tensile of bar	fs' = fs / ø'	kg/cm2 326.04
		7/8.b.h	cm2 10,500.00
	shear concrete	Tca = S / (7/8.b.h)	kg/cm2 4.93

bar

4.1.13 SUBSTRUCTURE (PEDESTRIAN BRIDGE SPAN 31/16.0M)

Location: Deli River UP19+0

Bridge Width : 2.0 m

PRESTRESSED CONCRETE BRIDGE COMPUTATION
CHANNEL MEDAN FLOOD WAY
Br – Mf 8
Station : Du 19 + 00

span		
Left side	Midle	Right side
16.00	31.00	16.00

Width
2.0 m

II SUB STRUCTURE

II.1 Abutment
II.I.1 Neutral axis of Abutment
II.I.2 Earthquake coefficient
II.I.3 Axial forces on Abutment
II.I.4 Coulumb coefficient
II.I.5 Horizontal force
- II.I.5.1 Case – I,Normal condition (HWL)
- II.I.5.2 Case – II,Normal condition (LWL)
- II.I.5.3 Case – III,Earthquake condition (HWL)
- II.I.5.4 Case – IV,Earthquake condition (LWL)

II.I.6 Combined Load on Abutment
- II.I.6.1 Case – I,Normal condition (HWL)
- II.I.6.2 Case – II,Normal condition (LWL)
- II.I.6.3 Case – III,Earthquake condition (HWL)
- II.I.6.4 Case – IV,Earthquake condition (LWL)

II.2 PIER
II.2.1 Neutral axis of Pier
II.2.2 Axial forces on Pier
II.2.3 Combined Load on Pier
- II.2.3.1 Case – I,Normal condition (HWL)
- II.2.3.2 Case – II,Normal condition (LWL)
- II.2.3.3 Case – III,Earthquake condition (HWL)
- II.2.3.4 Case – IV,Earthquake condition (LWL)

Project : Medan Flood Control Channel : Medan Flood Way Structure: Br – F 8 Station : DU –19 + 00	Japan International Cooperation Agency (JICA)	Calculation sheet Date Nos of sheet Prepared by

II SUBSTRUCTURE

II.1 ABUTMENT

II.1.1 Neutral axis of Left side Abutment

Top deck elevation	=	36.925	m					
Footing bottom elevation	=	29.925	m					
depth of abutment = Ht	=	7.00	m					
depth beam	=	0.90	m					
depth slab	=	0.200	m					
depth of beam to deck	=	1.100	m					
depth of beam and deck	=	0.900	+	0.200	=	1.100	m	
depth bearing pad					=	0.100	m	
depth back wall	=	1.100	+	0.100	=	1.200	m	
depth of footing	=	1.000	m					
depth of steam	=	7.000	–	1.200	–	1.000	=	4.800 m

H1	=	1.200	m	W1	=	0.300 m
H2	=	4.800	m	Wf1	=	1.600 m
H3	=	1.000	m	Wf2	=	1.000 m
Ht	=	7.000	m	Wf3	=	1.200 m
	=			W3	=	3.800 m
Depth of back fill	=	7.000	–	1.000	=	6.000 m
H4	=	0.500	m	W4	=	0.550 m
H5	=	0.250	m	W5	=	0.550 m
H6	=	0.500	m	W6	=	0.200 m
H7	=	0.250	m	W7	=	0.200 m
H8	=	0.300	m	W8	=	0.300 m
H9	=	0.300	m	W9	=	1.200 m

A1	W1	=	0.300	X1 =	W1/2	+	W2	+	Wf3				
					0.150	+	1.000	+	1.200		=	2.350	m
	H1	=	1.200	Y1=	Ht	–	H1/2						
					7.000	–	0.600				=	6.400	m
A2	W2	=	1.000	X2 =	W2/2	+	Wf3						
					0.500	+	1.200				=	1.700	m
	H2	=	4.800	Y2=	H2/2	+	H3						
					2.400	+	1.000				=	3.400	m
A3	W3	=	3.800	X3 =	W3/2								
					1.900						=	1.900	m
	H3	=	1.000	Y3=	H3/2								
					0.500						=	0.500	m
A4	W4	=	0.550	X4 =	W4/2	+	W2	+	Wf3				
					0.275	+	1.000	+	1.200		=	2.475	m
	H4	=	0.500	Y4=	H2	–	H4/2	+	H3				
					4.800	–	0.500	+	1.000		=	5.300	m
A5	W5	=	0.550	X5 =	W5/3	+	W2	+	Wf3				
					0.183	+	1.000	+	1.200		=	2.383	m
	H5	=	0.250	Y5=	H2	–	H4/2	–	H5/3	+ H3			
					4.800	–	0.250	–	0.083	+ 1.000	=	5.467	m
A6	W6	=	0.200	X6 =	Wf3	–	W6/2						
					1.200	–	0.100				=	1.100	m
	H6	=	0.500	Y6=	H2	–	H6/2	+	H3				
					4.800	–	0.250	+	0.083		=	4.633	m
A7	W7	=	0.200	X7 =	Wf3	–	W7/3						
					1.200	–	0.067				=	1.133	m
	H7	=	0.250	Y7=	H2	–	H6/2	–	H7/3	+ H3			
					4.800	–	0.250	–	0.083	+ 1.000	=	5.467	m

A8	W8	=	1.600	X8 =	W8/3	+	Wf2	+	Wf3				
					0.533	+	1.000	+	1.200		=	2.733	m
	H8	=	0.300	Y8=	H8/3	+	H3						
					0.100	+	1.000				=	1.100	m
A9	W9	=	1.200	X9 =	W9x2/3								
					0.800						=	0.800	m
	H9	=	0.300	Y9=	H9/3	+	H3						
					0.100	+	1.000				=	1.100	m

Wing wall

Hgw	=	1.200 m	H back fill	=	6.00 m
Ww1	=	3.00 m	Hw1	=	3.00 m
Ww2	=	2.30 m	Hw2	=	1.00 m
Ww3	=	0.70 m	Hw3	=	1.00 m
Ww4	=	2.30 m	Hw4	=	1.70 m
Ww5	=	2.30 m	Hw5	=	0.30 m

Ww1	Ww1	=	3.000	Xw1=	Ww1/2	+	W2	+	Wf3				
					1.500	+	1.000	+	1.200		=	3.700	m
	Hw1	=	3.000	Yw1=	Ht	–	Hw1/2						
					7.000	–	1.500				=	5.500	m
Ww2	Ww2	=	2.300	Xw2=	Ww2/2	+	W2	+	Wf3				
					1.150	+	1.000	+	1.200		=	3.350	m
	Hw2	=	1.000	Yw2=	Ht	–	Hw1	–	Hw2/2				
					7.000	–	3.000	–	0.500		=	3.500	m
Ww3	Ww3	=	0.700	Xw3=	W3	–	Ww3/2						
					3.800	–	0.350				=	3.450	m
	Hw3	=	1.000	Yw3=	Ht	–	Hw1	–	Hw3/2				
					7.000	–	3.000	–	0.333		=	3.667	m
Ww4	Ww4	=	2.300	Xw4=	Ww4/2	+	W2	+	Wf3				
					1.150	+	1.000	+	1.200		=	3.350	m
	Hw4	=	1.700	Yw4=	Hw4/2	+	Hw5	+	H3				
					0.850	+	0.300	+	1.000		=	2.150	m
Ww5	Ww5	=	2.300	Xw5=	W3	–	Ww5x2/3						
					3.800	–	1.533				=	2.267	m
	Hw5	=	0.300	Yw5=	Hw5/3	+	H3						
					0.100	+	1.000				=	1.100	m

Guide wall

Gw	Wgw	=	ERR	Xgw=	Wgw/2	+	W2	+	Wf3				
					ERR	+	1.000	+	ERR		=	ERR	m
	Hgw	=	1.200	Ygw=	Ht	+	Hgw/2						
					7.000	+	0.600				=	7.600	m

a. In case High Water Level

Hwl elvation	=	34.080	m			
Lwl elvation	=	28.289	m			
Base foting elv.	=	36.925	–	7.000	=	29.925 m
Top foting elv.	=	29.925	+	1.000	=	30.925 m

Depth of wet soil

H wet.l	=	Top deck elv	–	Hwl elvation		
	=	36.925	–	34.080	=	2.845 m
H wet.r	=	2.845	–	1.2	=	1.645 m
Depth of saturated soli	=	H satl				
H satl	=	6.000	–	2.845	=	3.155 m

a.1 soil wet condition

wet.l	Wwet.l	=	1.600	X1=	Wwet.l/2	+	W2	+	W3				
					0.800	+	1.000	+	ERR	=	ERR	m	
	Hwet.l	=	2.845	Y1=	Ht	−	Hwet.l/2						
					7.000	−	1.422			=	5.578	m	
wet.r	Wwet.r	=	1.200	X2=	W3/2								
					ERR					=	ERR	m	
	Hwet.r	=	1.645	Y2=	Hwet.r/2	+	H3						
					0.822	+	1.000			=	1.822	m	

a.2 soil saturated condition

sat.l	Wsat.l	=	1.600	X1=	Wsat.l/2	+	W2	+	W3				
					0.800	+	1.000	+	ERR	=	ERR	m	
	Hsat.l	=	3.155	Y1=	Hsat.l/2	+	H3						
					1.578	+	1.000			=	2.578	m	
sat.r	Wsat.r	=	1.200	X2=	Wsat.r/2								
					0.600					=	0.600	m	
	Hsat.r	=	3.155	Y2=	Hsat.r/2	+	H3						
					1.578	+	1.000			=	2.578	m	

b In case Low Water Level

b.1 soil wet condition

Depth of wet soil

H wet.l	=	36.925	−	28.289	=	8.636 m under footing
H wet.l	=	36.925	−	30.925	=	6.000 m
H wet.r	=	6.000	−	1.200	=	4.800 m

Depth of saturated soil

Hsat	=	6.000	−	6.000	=	0.000 m

wet.l	Wwet.l	=	1.600	X1 =	Wwet.l/2	+	W2	+	W3				
					0.800	+	1.000	+	ERR	=	ERR	m	
	Hwet.l	=	6.000	Y1 =	Hwet.l/2	+	H3						
					3.000	+	1.000			=	4.000	m	
wet.r	Wwet.r	=	1.200	X2 =	Wwet.r/2								
					0.600					=	0.600	m	
	Hwet.r	=	4.800	Y2 =	Hwet.r/2	+	H3						
					2.400	+	1.000			=	3.400	m	

b.2 soil saturated condition

sat.l	Wsat.l	=	1.600	X1 =	Wsat.l/2	+	W2	+	W3				
					0.800	+	1.000	+	ERR	=	ERR	m	
	Hsat.l	=	0.000	Y1 =	Hsat.l/2	+	H3						
					0.000	+	1.000			=	1.000	m	
sat.r	Wsat.r	=	1.200	X2 =	Wsat.r/2								
					0.600					=	0.600	m	
	Hsat.r	=	0.000	Y2 =	Hsat.r/2	+	H3						
					0.000	+	0.200			=	0.200	m	

al−xy

al−xy

Project : Medan Flood Control Channel : Medan Flood Way Structure : Br − F8 Station : DU −19 + 00	Japan International Cooperation Agency (JICA)	Calculation sheet Date Nos of sheet Prepared by

II.1.2 Axial load to Abutment

a. Superstucture

Vertical load/m'

Length of Abutment	=	3.00	m
Depth of Abutment	=	7.00	m
Width of footing	=	3.80	m

Vertical load on abutment :

	Dead load	Live load		Total
Weight	30.94	13.00	=	43.94
per Abt.	15.47	6.50	=	21.97
per m'	5.16	2.17	=	7.32

Siesmic coefficient = 0.15

Horizontal load

Heq = 0.150 x Rdl

= 0.150 x 5.157

= 0.774 ton/m'

Acting point of siesmic load

W3 = 1.20 m

H3 = 1.00 m

X = 0.300 + WF3

= 0.300 + 1.20

= 1.500 m

Y = H2 + H3

= 4.800 + 1.00

= 5.80 m

b. Abutment section

Self weight

Sec−tion	width m	depth m	length m	nos	Yc t/m3	G / m'	Gv/m' m3	X m	Y m	G.X m3	G.Y m3
A1	0.30	1.945	1.00	1.00	2.40	1.400	1.400	2.350	6.400	3.291	8.963
A2	1.00	4.800	1.00	1.00	2.40	11.520	11.520	1.700	3.400	19.584	39.168
A3	5.10	1.00	1.00	1.00	2.40	12.240	12.240	1.900	0.500	23.256	6.120
A4	0.55	0.50	1.00	1.00	2.40	0.660	0.660	2.475	5.300	1.634	3.498
A5	0.55	0.25	1.00	1.00	2.40	0.165	0.165	2.383	5.467	0.393	0.902
A6	0.20	0.50	1.00	1.00	2.40	0.240	0.240	1.100	4.633	0.264	1.112
A7	0.20	0.50	1.00	1.00	2.40	0.120	0.120	1.133	5.467	0.136	0.656
A8	2.30	0.30	1.00	1.00	2.40	0.828	0.828	2.733	1.100	2.263	0.911
A9	1.80	0.30	1.00	1.00	2.40	0.648	0.648	0.800	1.100	0.518	0.713
					sum		27.82			51.34	62.04
					Wing wall and guard wall						
Ww1	3.000	3.000	0.40	2.00	2.400	5.760	1.920	3.700	5.500	7.104	10.560
Ww2	2.300	1.000	0.40	2.00	2.400	1.472	0.491	3.350	3.500	1.644	1.717
Ww3	0.400	1.000	0.40	2.00	2.400	0.256	0.085	3.450	3.667	0.294	0.313
Ww4	2.300	1.700	0.40	2.00	2.400	2.502	0.834	3.350	2.150	2.794	1.793
Ww5	2.300	0.300	0.40	2.00	2.400	0.442	0.147	2.267	1.100	0.334	0.162
Gw	3.000	1.200	0.40	2.00	2.000	1.920	0.640	3.760	7.600	2.406	4.864
					sum		3.477			12.170	14.546
					Total		31.30			63.51	76.59

Centre of gravity

$$X = \frac{Gv/m'.X}{Gv/m'} = \frac{63.509}{31.299} = 2.029 \text{ m}$$

$$Y = \frac{Gv/m'.Y}{Gv/m'} = \frac{76.588}{31.299} = 2.447 \text{ m}$$

H−abt = 0.150 x 31.299 = 4.695 ton

al−xy

c. Back fill

a. Incase High Water level

Depth of back fill = 6.000 m
H wet.l = 2.845 m
H wet.r = 1.645 m
H saturated = 3.155 m

Section	width m	depth m	length m	nos	Yc t/m3	G / m'	Gv/m' m3	X m	Y m	G.X m3	G.Y m3
Wet.l	2.300	2.845	1.00	1.00	1.850	12.105	12.105	3.000	5.578	36.32	67.52
Wet.r	1.800	1.645	1.00	1.00	1.850	5.478	5.478	0.600	1.822	3.29	9.98
Sat.l	2.300	3.155	1.00	1.00	2.000	14.513	14.513	3.000	2.578	43.539	37.407
Sat.r	1.800	3.155	1.00	1.00	2.000	11.358	11.358	0.600	2.578	6.815	29.275
					sum		43.454			89.957	144.181

X = Gv/m'.X / Gv/m' = 89.957 / 43.454 = 2.070 m

Y = Gv/m'.Y / Gv/m' = 144.181 / 43.454 = 3.318 m

H-abt = 0.150 x 43.454 = 6.518 ton

b. Low water level

Depth of Hwet.l = 6.000 m
Depth of Hwet.r = 1.645 m
Depth of H saturated = 0.000 m

a. Wet condition

Section	width m	depth m	length m	nos	Yc t/m3	G / m'	Gv/m' m3	X m	Y m	G.X m3	G.Y m3
Wet.l	2.300	6.000	1.00	1.00	1.850	25.530	25.530	3.000	4.000	76.590	102.120
Wet.r	1.800	1.645	1.00	1.00	1.850	5.478	5.478	0.600	3.400	3.287	18.625
Sat.l	2.300	0.000	1.00	1.00	2.000	0.000	0.000	0.000	0.000	0.000	0.000
Sat.r	1.800	0.000	1.00	1.00	2.000	0.000	0.000	0.000	0.000	0.000	0.000
					sum		31.008			79.877	120.745

Habt 0.150 x 31.008 = 4.651 ton

Centre of gravity

X = Gv/m'.X / Gv/m' = 79.877 / 31.008 = 2.576 m

Y = Gv/m'.Y / Gv/m' = 120.745 / 31.008 = 3.894 m

al-xy

4 - 470

Project	: Medan Flood Control	Japan International Cooperation Agency (JICA)	Calculation sheet
Channel	: Medan Flood Way		Date
Structure	: Br – F8		Nos of sheet
Station	: DU –19 + 00		Prepared by

II.1.3 Columb's coefficient

Right side Abutment

Normal condition

ø	=	30.00	deg.	ø – alpa	=	30.00	–	0.0	=	30.00 deg.
alpa	=	0.0	deg.	ø + delta	=	30.00	+	30.00	=	60.00 deg.
Q	=	0.0	deg.	ø – beta	=	30.00	–	0.0	=	30.00 deg.
delta	=	30.00	deg.	alpa + delta	=	0.0	+	30.00	=	30.00 deg.
beta	=	0.0	deg.	alpa – beta	=	0.0	–	0.000	=	0.00 deg.

$$Ka = \frac{\cos^2(\text{ø} - \text{alpa})}{\cos^2 \text{alpa}.\cos(\text{alpa} + \text{delta}).\left\{\left(1 + \sqrt{\frac{\sin(\text{ø} + \text{delta}).\sin(\text{Ø} - \text{beta})}{\cos(\text{alpa} + \text{delta}).\cos(\text{alpa} - \text{beta})}}\right)\right\}^2}$$

Cos(alpa)	=	1.000	sin(ø + delta)	=	0.866
Cos^2 (alpa)	=	1.000	sin(ø – beta)	=	0.500
Cos(ø – alpa)	=	0.866	cos(alpa + delta)	=	0.866
Cos^2 (ø – alpa)	=	0.750	cos(alpa – beta)	=	1.000

A = sin(ø+delta).sin(ø–beta) = 0.866 x 0.500 = 0.433

B = cos (alpa + delta).cos(alpa–beta) = 0.866 + 1.000 = 0.866

C = cos^2 (alpa).cos(alpa+delta) @sqrt(A/B) = 1.000 x 0.866 = 0.866 = 0.71

D = (1 + @sqrt(A/B) ^2 = (1.000 + 0.707)^2 = 2.914

C.D = 0.866 x 2.914 = 2.524

$$Ka = \frac{\cos^2(\text{ø}-\text{alpa})}{C.D} = \frac{0.75}{2.52} = 0.297$$

Earth quake condition

$$Ke = \frac{\cos(\text{ø} - \text{alpa} - \text{Qo})^2}{\cos \text{Qo}.\cos^2 \text{alpa}.\cos(\text{alpa} + \text{delta}^{\wedge} + \text{Qo}).\left\{\left(1 + \sqrt{\frac{\sin(\text{ø} + \text{delta}).\sin(\text{Ø} - \text{beta} - \text{Qo})}{\cos(\text{alpa} + \text{delta} + \text{Qo}).\cos(\text{alpa} - \text{beta})}}\right)\right\}^2}$$

Qo = composite siesmic angle

$$k' = \tan^{-1}.k = \frac{Y}{Y-1} \times k$$

k = siesmic coefficient in air = 0.15

Y = 2.00

Y – 1 = 1.00

$$k' = \frac{Y}{Y-1} \times k$$

coulum

		2.00									
	=	-----	x	0.15							
		1.00									
	=	0.30									
Qo	=	@atan ^ -1.k									
Qo	=	8.5308									
ø	=	30.00	deg.	ø - alpa-Qo	=	30.00	-	0.00	- 8.53	=	21.47
alpa	=	0.00	deg.	ø + delta	=	30.00	+	15.00		=	45.00
Q	=	8.53	deg.	ø - beta-Qo	=	30.00	-	0.00	- 8.53	=	21.47
delta	=	15.00	deg.	ø - beta + Qo	=	30.00	-	0.00	+ 8.53	=	36.53
beta	=	0.00	deg.	alpa + delta+Qo	=	0.00	+	15.00	+ 8.53	=	23.53
				alpa - beta	=	0.000	-	0.000		=	0.00
Cos(Qo)	=	0.989									
Cos(alpa)	=	1.000		sin(ø + delta)	=	0.707					
Cos^2 (alpa)	=	1.000		sin(ø - beta - Qo)	=	0.366					
Cos(ø - alpa - Qo)	=	0.931		cos(alpa + delta + Qo	=	0.917					
Cos^2 (ø - alpa-Qo)	=	0.866		cos(alpa - beta)	=	1.000					
A	=	sin(ø+delta).sin(ø-beta-Qo)									
	=	0.707	x	0.366							
	=	0.259									
B	=	cos (alpa + delta+Qo).cos(alpa-beta)									
	=	0.917	+	1.000							
	=	0.917									
C	=	cos Qo.Cos ^ 2(alpa).cos(alpa+delta+Qo)									
	=	0.989	x	1.000	x	0.92					
	=	0.907									
@sqrt(A/B)	=	0.531									
D	=	(1 + @sqrt(A/B) ^ 2									
	=	(1.000	+	0.531) ^ 2							
	=	2.345									
C.D	=	0.907	x	2.345							
	=	2.126									
		Cos^2(ø-alpa)	0.87								
Ka	=	------	=	----	=	0.407					
		C.D		2.126							

coulum

Project : Medan Flood Control Channel : Medan Flood Way Structure: Br - F8 Station : DU -19 + 00	Japan International Cooperation Agency (JICA)	Calculation sheet Date Nos of sheet Prepared by

II.1.4 Lateral earth pressure due to earthquake

Kh = C x I x S

Kh = coefficient of horizontal siesmic loading

C = the base shear coefficient,base on the data :

siesmic zone and soil condition

Siesmic zone = 4

soil condition soft so C = 0.15

S = the structure type facto = 1

I = the importance factor

for bridge carrying more than 2.000 vehicle per day I = 1.2

C	I	S	kh
0.15	1.2	1	0.18

for all other permanent bridge I = 1

C	I	S	kh
0.15	1	1	0.15

for temporary bridge I = 0.8

C	I	S	kh
0.15	0.8	1	0.12

soil condition firm so C = 0.10

for bridge carrying more than 2.000 vehicle per day

C	I	S	kh
0.1	1.2	1	0.12

for all other permanent bridge

C	I	S	kh
0.1	1.00	1	0.10

for temporary bridge

C	I	S	kh
0.1	0.8	1	0.08

source,Bridge Management System

eq

Project	: Medan Flood Control	Japan International Cooperation Agency (JICA)	Calculation sheet
Channel	: Medan Flood Way		Date
Structure	: Br – F 8		Nos of sheet
Station	: DU –19 + 00		Prepared by

II.1.5 Horizontal force at Abutment

II.1.5.1 Case – I, Normal Condition High Water Level (HWL)

Depth of Abutment	=	7.00	m		
Surcharge load	=	1.00	t/m2		
Unit weight wet soil	=	1.85	t/m3		
Unit weight saturated soil	=	2.00	t/m3		
Unit weight of water	=	1.00	t/m3		
Width of footing					
Wf1	=	1.60	m		
Wf2	=	1.00	m		
Wf3	=	1.20	m		
W3	=	3.80	m		
Top slab elevation	=	36.925	m		
Elevation of Hwl	=	34.080	m		
Elevation of Lwl	=	27.289	m		
Depth of footing	=	1.000	m		
Elv.of base footing	=	36.925	–	7.00 =	29.925 m
Elv.of top footing	=	29.925	+	1.00 =	30.925 m
Depth of back fill	=	36.925	–	30.925 =	6.000 m

Depth of wet soil = H wet

H wet = Top elv. – Hwl elv.

H wet = 36.925 – 34.080 = 2.845 m

Depth of saturated soil = H sat

H sat = 6.00 – 2.845 = 3.155 m

A Active earth pressure

By live load

Surcharge load = (q)

q	=	1.000 t/m2	Sin(alpha)	=	0.000
delta	=	0.000	L	=	1.000 m
alpa	=	0.000	H	=	6.000 m
Cos(alpha	=	1.000	B	=	3.800 m

oefficient of active pressure Ka = 0.297

Pq = q x H x L x Ka

Pq = 1.000 x 6.000 x 1.000 x 0.297

Pq = 1.782 ton

Pqv	=	Hq x Sin(alpha)	Pqh	=	Hq x Cos(alpha)
	=	1.782 x 0.000		=	1.782 x 1.000
	=	0.000 ton		=	1.782 ton
X	=	3.800 m	Y	=	6.000 : 2.000
				=	3.000 m

B By earth

B–1 Wet soil

Length = 1.000 m

Hwet = 2.845 m

Hsat = 3.155 m

1. Load trianngular

Pw = 0.500 x Ywet x Hwet^2 x L x Ka

= 0.500 x 1.850 x 8.094 x 1.000 x 0.297

= 2.224 ton

Pw(v)	=	Pw x Sin(alpha)	Pw(h)	=	Pw x Cos(alpha)
	=	2.224 x 0.000		=	2.224 x 1.000
	=	0.000 ton		=	2.224 ton
X	=	3.800 m	Y	=	2.845 : 3.000 + 3.155
				=	4.103 m

B–2 Saturated

H sat = 3.155 m

2. Load rectangular

Ps1 = Ysat x H sat x L x Ka

= 2.000 x 3.155 x 1.000 x 0.297

= 1.874 ton

Ps1(v)	=	H sat x Sin(alpha)	Ps1(h)	=	H sat x Cos(alpha)
	=	1.874 0.000		=	1.874 x 1.000
	=	0.000 ton		=	1.874 ton
X	=	3.800 m	Y	=	3.155 : 2.000
				=	1.578 m

3. Load trianngular

Ps2 = 0.500 x Ysat x H sat^2 x L x Ka

= 0.500 x 2.000 x 9.954 x 1.000 x 0.297

= 2.956 ton

Ps2(v)	=	H sat–2 x Sin(alpha)	Ps2(h)	=	H sat–2 x Cos(alpha)
	=	2.956 x 0.000		=	2.956 x 1.000
	=	0.000 ton		=	2.956 ton
X	=	3.800 m	Y	=	3.155 : 3.000
				=	1.052 m

4. Water

Hw = 3.155 m

Pw = 0.500 x Yw x Hw^2 x L

= 0.500 x 1.000 x 9.954 x 1.000

= 4.977 ton

X = 3.800 m

Y = 3.155 : 3.000

= 1.052 m

Hw = 3.455 m

Pw = 0.500 x Yw x Hw^2 x L

= 0.500 x 1.000 x 11.937 x 1.000

= 5.969 ton

X = 0.500 m

Y = 3.455 : 3.000

= 1.152 m

5. Uplife HWL

B = 3.800 m

Pu = Hw x B x Yw

= 3.155 x 3.800 x 1.000

= 11.989 ton/m'

X = 3.800 : 2.000

= 1.900 m

fh-1

fh-1

Project	: Medan Flood Control	Japan International Cooperation Agency (JICA)	Calculation sheet
Channel	: Medan Flood Way		Date
Structure	: Br – F 8		Nos of sheet
Station	: DU –19 + 00		Prepared by

II.1.5 Horizontal force at Abutment

II.1.5.2 Case – II, Normal Condition Low Water Level (LWL)

Depth of Abutment	=	7.00	m
Surcharge load	=	1.00	t/m2
Unit weight wet soil	=	1.85	t/m3
Unit weight saturated soil	=	2.00	t/m3
Unit weight of water	=	1.00	t/m3
Width of footing			
Wf1	=	1.60	m
Wf2	=	1.00	m
Wf3	=	1.20	m
W3	=	3.80	m
Top slab elevation	=	36.925	m
Elevation of Hwl	=	34.080	m
Elevation of Lwl	=	27.289	m
Depth of footing	=	1.000	m
Elv.of base footing	=	36.925 – 7.00 =	29.925 m
Elv.of top footing	=	29.925 + 1.00 =	30.925 m
Depth of back fill	=	36.925 – 30.925 =	6.000 m

Depth of wet soil = H wet

H wet = Top elv. – Hwl elv.

H wet = 36.925 – 30.925 = 6.000 m under footing

Depth of saturated soil = H sat

H sat = 6.00 – 6.000 = 0.000 m

A Active earth pressure

By live load

Surcharge load = (q)

q	=	1.000 t/m2	Sin(alpha)	=	0.000	
delta	=	0.000	L	=	1.000	m
alpa	=	0.000	H	=	6.000	m
Cos(alpha	=	1.000	B	=	3.800	m

oefficient of active pressure Ka = 0.297

Pq = q x H x L x Ka

Pq = 1.000 x 6.000 x 1.000 x 0.297

Pq = 1.782 ton

Pqv	=	Hq	x Sin(alpha)	Pqh	=	Hq x Cos(alpha)
	=	1.782	x 0.000		=	1.782 x 1.000
	=	0.000	ton		=	1.782 ton
X	=	3.800	m	Y	=	6.000 : 2.000
					=	3.000 m

B By earth

B–1 Wet soil

Length = 1.000 m

Hwet = 6.000 m

Hsat = 0.000 m

1. Load trianngular

Pw = 0.500 x Ywet x Hwet^2 x L x Ka

Pw = 0.500 x 1.850 x 36.000 x 1.000 x 0.297

Pw = 9.890 ton

Pw(v)	=	Pw	x Sin(alpha)	Pw(h)	=	Pw x Cos(alpha)
	=	9.890	x 0.000		=	9.890 x 1.000
	=	0.000	ton		=	9.890 ton
X	=	3.800	m	Y	=	6.000 : 3.000 + 0.000
					=	2.000 m

B–2 Saturated

H sat = 0.000 m

2. Load rectangular

Ps1 = Ysat x H sat x L x Ka

Ps1 = 2.000 x 0.000 x 1.000 x 0.297

Ps1 = 0.000 ton

Ps1(v)	=	H sat	x Sin(alpha)	Ps1(h)	=	H sat x Cos(alpha)
	=	0.000	0.000		=	0.000 x 1.000
	=	0.000	ton		=	0.000 ton
X	=	3.800	m	Y	=	0.000 : 2.000
					=	0.000 m

3. Load trianngular

Ps2 = 0.500 x Ysat x H sat^2 x L x Ka

Ps2 = 0.500 x 2.000 x 0.000 x 1.000 x 0.297

Ps2 = 0.000 ton

Ps2(v)	=	H sat–2	x Sin(alpha)	Ps2(h)	=	H sat–2 x Cos(alpha)
	=	0.000	x 0.000		=	0.000 x 1.000
	=	0.000	ton		=	0.000 ton
X	=	3.800	m	Y	=	0.000 : 3.000
					=	0.000 m

4. Water

Hw = 0.000 m

Pw = 0.500 x Yw x Hw^2 x L

Pw = 0.500 x 1.000 x 0.000 x 1.000

Pw = 0.000 ton

X = 3.800 m

Y = 0.000 : 3.000

Y = 0.000 m

Hw = 0.300 m

Pw = 0.500 x Yw x Hw^2 x L

Pw = 0.500 x 1.000 x 0.090 x 1.000

Pw = 0.045 ton

X = 0.500 m

Y = 0.300 : 3.000

Y = 0.100 m

5. Uplife HWL

B = 3.800 m

Pu = Hw x B x Yw

Pu = 0.000 x 3.800 x 1.000

Pu = 0.000 ton/m'

X = 3.800 : 2.000

X = 1.900 m

fh-2

fh-2

Project : Medan Flood Control	Japan International Cooperation Agency (JICA)	Calculation sheet
Channel : Medan Flood Way		Date
Structure : Br – P 8		Nos of sheet
Station : DU –19 + 00		Prepared by

II.1.5 Horizontal force at Abutment

II.1.5.3 Case – III, Earthquake Condition High Water Level (HWL)

Depth of Abutment	=	7.00 m
Surcharge load	=	0.50 t/m2
Unit weight wet soil	=	1.85 t/m3
Unit weight saturated soil	=	2.00 t/m3
Unit weight of water	=	1.00 t/m3
Width of footing		
Wf1	=	1.60 m
Wf2	=	1.00 m
Wf3	=	1.20 m
W3	=	3.80 m
Top slab elevation	=	36.925 m
Elevation of Hwl	=	34.080 m
Elevation of Lwl	=	27.289 m
Depth of footing	=	1.000 m
Elv.of base footing	=	36.925 – 7.00 = 29.925 m
Elv.of top footing	=	29.925 + 1.00 = 30.925 m
Depth of back fill	=	36.925 – 30.925 = 6.000 m

Depth of wet soil = H wet

H wet = Top elv. – Hwl elv.

H wet = 36.925 – 34.080 = 2.845 m

Depth of saturated soil = H sat

H sat = 6.00 – 2.845 = 3.155 m

A Active earth pressure

By live load

Surcharge load = (q)

q	=	0.500 t/m2	Sin(alpha)	=	0.000
delta	=	0.000	L	=	1.000 m
alpa	=	0.000	H	=	6.000 m
Cos(alpha	=	1.000	B	=	3.800 m

oefficient of active pressure Ke = 0.407

Pq = q x H x L x Ke

Pq = 0.500 x 6.000 x 1.000 x 0.407

Pq = 1.221 ton

Pqv	=	Hq x Sin(alpha)	Pqh	=	Hq x Cos(alpha)
	=	1.221 x 0.000		=	1.221 x 1.000
	=	0.000 ton		=	1.221 ton
X	=	3.800 m	Y	=	6.000 : 2.000
				=	3.000 m

B By earth

B–1 Wet soil

Length = 1.000 m

Hwet = 2.845 m

Hsat = 3.155 m

1. Load trianngular

Pw = 0.500 x Ywet x Hwet^2 x L x Ke

= 0.500 x 1.850 x 8.094 x 1.000 x 0.407

= 3.047 ton

Pw(v)	=	Pw x Sin(alpha)	Pw(h)	=	Pw x Cos(alpha)
	=	3.047 x 0.000		=	3.047 x 1.000
	=	0.000 ton		=	3.047 ton
X	=	3.800 m	Y	=	2.845 : 3.000 + 3.155
				=	4.103 m

B–2 Saturated

H sat = 3.155 m

2. Load rectangular

Ps1 = Ysat x H sat x L x Ke

= 2.000 x 3.155 x 1.000 x 0.407

= 2.568 ton

Ps1(v)	=	H sat x Sin(alpha)	Ps1(h)	=	H sat x Cos(alpha)
	=	2.568 0.000		=	2.568 x 1.000
	=	0.000 ton		=	2.568 ton
X	=	3.800 m	Y	=	3.155 : 2.000
				=	1.578 m

3. Load trianngular

Ps2 = 0.500 x Ysat x H sat^2 x L x Ke

= 0.500 x 2.000 x 9.954 x 1.000 x 0.407

= 4.051 ton

Ps2(v)	=	H sat–2 x Sin(alpha)	Ps2(h)	=	H sat–2 x Cos(alpha)
	=	4.051 x 0.000		=	4.051 x 1.000
	=	0.000 ton		=	4.051 ton
X	=	3.800 m	Y	=	3.155 : 3.000
				=	1.052 m

4. Water

Hw = 3.155 m

Pw = 0.500 x Yw x Hw^2 x L

= 0.500 x 1.000 x 9.954 x 1.000

= 4.977 ton

X = 3.800 m

Y = 3.155 : 3.000

= 1.052 m

Hw = 3.455 m

Pw = 0.500 x Yw x Hw^2 x L

= 0.500 x 1.000 x 11.937 x 1.000

= 5.969 ton

X = 0.500 m

Y = 3.455 : 3.000

= 1.152 m

5. Uplife HWL

B = 3.800 m

Pu = Hw x B x Yw

= 3.155 x 3.800 x 1.000

= 11.989 ton/m'

X = 3.800 : 2.000

= 1.900 m

Project	: Medan Flood Control	Japan International Cooperation Agency (JICA)	Calculation sheet
Channel	: Medan Flood Way		Date
Structure	: Br – F 8		Nos of sheet
Station	: DU –19 + 00		Prepared by

II.1.5 Horizontal force at Abutment

II.1.5.4 Case – IV, Earthquake Condition Low Water Level (LWL)

Depth of Abutment	=	7.00	m
Surcharge load	=	0.50	t/m2
Unit weight wet soil	=	1.85	t/m3
Unit weight saturated soil	=	2.00	t/m3
Unit weight of water	=	1.00	t/m3
Width of footing			
Wf1	=	1.60	m
Wf2	=	1.00	m
Wf3	=	1.20	m
W3	=	3.80	m
Top slab elevation	=	36.925	m
Elevation of Hwl	=	34.080	m
Elevation of Lwl	=	27.289	m
Depth of footing	=	1.000	m
Elv.of base footing	=	36.925 – 7.00 =	29.925 m
Elv.of top footing	=	29.925 + 1.00 =	30.925 m
Depth of back fill	=	36.925 – 30.925 =	6.000 m

Depth of wet soil = H wet

H wet = Top elv. – Hwl elv.

H wet = 36.925 – 30.925 = 6.000 m under footing

Depth of saturated soil = H sat

H sat = 6.00 – 6.000 = 0.000 m

A Active earth pressure

By live load

Surcharge load = (q)

q	=	0.500 t/m2	Sin(alpha)	=	0.000	
delta	=	0.000	L	=	1.000	m
alpa	=	0.000	H	=	6.000	m
Cos(alpha	=	1.000	B	=	3.800	m

oefficient of active pressure Ke = 0.407

Pq = q x H x L x Ke

Pq = 0.500 x 6.000 x 1.000 x 0.407

Pq = 1.221 ton

Pqv	=	Hq	x Sin(alpha)	Pqh	=	Hq	x Cos(alpha)
	=	1.221	x 0.000		=	1.221	x 1.000
	=	0.000 ton			=	1.221 ton	
X	=	3.800 m		Y	=	6.000	: 2.000
					=	3.000 m	

B By earth

B–1 Wet soil

Length = 1.000 m

Hwet = 6.000 m

Hsat = 0.000 m

1. Load triangular

Pw = 0.500 x Ywet x Hwet^2 x L x Ke

= 0.500 x 1.850 x 36.000 x 1.000 x 0.407

= 13.553 ton

fh–4

Pw(v)	=	Pw	x Sin(alpha)	Pw(h)	=	Pw	x Cos(alpha)
	=	13.553	x 0.000		=	13.553	x 1.000
	=	0.000 ton			=	13.553 ton	
X	=	3.800 m		Y	=	6.000	: 3.000 + 0.000
					=	2.000 m	

B–2 Saturated

H sat = 0.000 m

2. Load rectangular

Ps1 = Ysat x H sat x L x Ke

= 2.000 x 0.000 x 1.000 x 0.407

= 0.000 ton

Ps1(v)	=	H sat	x Sin(alpha)	Ps1(h)	=	H sat	x Cos(alpha)
	=	0.000	0.000		=	0.000	x 1.000
	=	0.000 ton			=	0.000 ton	
X	=	3.800 m		Y	=	0.000	: 2.000
					=	0.000 m	

3. Load triangular

Ps2 = 0.500 x Ysat x H sat^2 x L x Ke

= 0.500 x 2.000 x 0.000 x 1.000 x 0.407

= 0.000 ton

Ps2(v)	=	H sat–2	x Sin(alpha)	Ps2(h)	=	H sat–2	x Cos(alpha)
	=	0.000	x 0.000		=	0.000	x 1.000
	=	0.000 ton			=	0.000 ton	
X	=	3.800 m		Y	=	0.000	: 3.000
					=	0.000 m	

4. Water

Hw = 0.000 m

Pw = 0.500 x Yw x Hw^2 x L

= 0.500 x 1.000 x 0.000 x 1.000

= 0.000 ton

X = 3.800 m

Y = 0.000 : 3.000

= 0.000 m

Hw = 0.300 m

Pw = 0.500 x Yw x Hw^2 x L

= 0.500 x 1.000 x 0.090 x 1.000

= 0.045 ton

X = 0.500 m

Y = 0.300 : 3.000

= 0.100 m

5. Uplife HWL

B = 3.800 m

Pu = Hw x B x Yw

= 0.000 x 3.800 x 1.000

= 0.000 ton/m'

X = 3.800 : 2.000

= 1.900 m

fh–4

Project : Medan Flood Control	Japan International Cooperation Agency (JICA)	Calculation sheet
Channel : Medan Flood Way		Date
Structure : Br – F 8		Nos of sheet
Station : DU –19 + 00		Prepared by

II.1.6 Combined load

II.1.6.1 Case – I , Normal condition (HWL)

Length	L	=	3.00	m	
Width of floting	W3	=	3.80	m	
Thick of footing	H3	=	1.00	m	

	Item		V load/m'	H load /m'	Xo	Yo	V.Xo	H.Yo
	Super structure	V–sp	7.320		0.800		5.856	
	Abutment	V–abt	31.300		2.048		64.102	
	Back fill	V–bf	43.454		2.070		89.950	
			Active earth pressure					
	Surcharge load	Pq		1.782		3.000		5.346
Wet soil	triangle load	Pw		2.224		4.103		9.125
Sat.soil	rectangular load	Ps1		1.874		1.578		2.957
	triangle load	Ps2		2.956		1.052		3.110
	Water	Pw in		(4.977)		1.052		(5.236)
		Pw out		5.969		1.152		6.876
	Up life	Pu	(11.909)		1.900		(22.627)	
		Total	70.165	9.828			137.281	22.178

$$X' = \frac{Vo.Xo}{Vo\ tot} = \frac{137.281}{70.165} = 1.957 \text{ m}$$

$$Y' = \frac{Ho.Yo}{Ho\ tot} = \frac{22.178}{9.828} = 2.257 \text{ m}$$

V = V/m' x L
= 70.17 x 3.00
= 210.50 ton

H = H/m' x L
= 9.83 x 3.00
= 29.48 ton

M = V.(X–(0.5.W)) – H.(Y–tb)

0.5 x W = 0.50 x 3.80
= 1.90 m

(X – (0.5xW)) = 1.96 – 1.90
= 0.06 m

(Y – tb) = 2.257 – 1.00
= 1.26 m

H x (Y – tb) = 29.48 x 1.26
= 37.05 t.m

= V x (X–(0.5 x W)) – (H x (Y–tb))
= 210.50 x 0.06 – 37.05
= 11.90 – 37.05
= (25.15) t.m

II.1.6.2 Case – II , Normal condition (LWL)

	Item		Vo/m'	Ho/m'	Xo	Yo	Vo.Xo	Ho.Yo
	Super structure	V–sp	7.320		0.800		5.856	
	Abutment	V–Abt	31.300		2.048		64.102	
	Back fill	V–bf	31.008		2.576		79.877	
			Active earth pressure					
	Surcharge load	Hq		1.983		3.000		5.949
Wet soil	triangle load	Hwet		9.890		2.000		19.780
Sat.soil	rectangular load	Hsat–1						
	triangle load	Hsat–2						
	Water	Pw in						
		Pw out						
	Up life	Pu						
	Total		69.628	11.873			149.835	25.729

$$X' = \frac{Vo.Xo}{Vo\ tot} = \frac{149.835}{69.628} = 2.152 \text{ m}$$

$$Y' = \frac{Ho.Yo}{Ho\ tot} = \frac{25.729}{11.873} = 2.167 \text{ m}$$

V = V/m' x L
= 69.63 x 3.00
= 208.88 ton

H = H/m' x L
= 11.87 x 3.00
= 35.62 ton

M = V x (X–(0.5 x W)) – (H x (Y–tb))

0.5 x W = 0.500 x 3.80
= 1.90 m

(X – (0.5xW)) = 2.152 – 1.90
= 0.25 m

(Y – tb) = 2.167 – 1.00
= 1.17 m

H x (Y – tb) = 35.62 x 1.17
= 41.57 m

= V x (X–(0.5 x W)) – (H x (Y–tb))
= 208.88 x 0.25 – 41.57
= 52.63 – 41.57
= 11.06 t.m

cld–an

Project	: Medan Flood Control	Japan International Cooperation Agency (JICA)	Calculation sheet
Channel	: Medan Flood Way		Date
Structure	: Br – F 8		Nos of sheet
Station	: DU –19 + 00		Prepared by

II.1.6 Combined load

II.1.6.3 Case – III Earthquake condition (HWL)

Length	L	=	3.00	m	
Width of floting	W3	=	3.80	m	
Thick of footing	H3	=	1.00	m	

	Item		V load/m'	H load /m'	Xo	Yo	V.Xo	H.Yo
	Super structure	V–sp	7.320	0.774	0.800	5.100	5.856	3.947
	Abutment	V–abt	31.300	4.695	2.048	2.393	64.102	11.235
	Back fill	V–bf	43.454	6.518	2.070	3.318	89.950	21.627
			Active earth pressure					
	Surcharge load	Pq		1.221		3.000		3.663
Wet soil	triangle load	Pw		3.047		4.103		12.502
Sat.soil	rectangular load	Ps1		2.568		1.578		4.052
	triangle load	Ps2		4.051		1.052		4.262
	Water	Pw in		(4.977)		1.052		(5.236)
		Pw out		5.969		1.152		6.876
	Up life	Pu	(11.909)		1.900		(22.627)	
		Total	70.165	23.866			137.281	62.929

$$X' = \frac{Vo.Xo}{Vo\ tot} = \frac{137.281}{70.165} = 1.957\ m \qquad Y' = \frac{Ho.Yo}{Ho\ tot} = \frac{62.929}{23.866} = 2.637\ m$$

V = V/m' x L
= 70.17 x 3.00
= 210.50 ton

H = H/m' x L
= 23.87 x 3.00
= 71.60 ton

M = V.(X–(0.5.W)) – H.(Y–tb)

0.5 x W = 0.50 x 3.80
= 1.90 m

(X – (0.5xW)) = 1.96 – 1.90
= 0.06 m

(Y – tb) = 2.637 – 1.00
= 1.64 m

H x (Y – tb) = 71.60 x 1.64
= 117.19 t.m

= V x (X–(0.5 x W)) – (H x (Y–tb))
= 210.50 x 0.06 – 117.19
= 11.90 – 117.19
= (105.28) t.m

cld–aq

II.1.6.4 Case – IV Earthquake condition (LWL)

	Item		Vo/m'	Ho/m'	Xo	Yo	Vo.Xo	Ho.Yo
	Super structure	V–sp	7.320	0.774	0.800	5.100	5.856	3.947
	Abutment	V–Abt	31.300	4.695	2.048	2.393	64.102	11.235
	Back fill	V–bf	31.008	4.651	2.576	3.894	79.877	18.111
					Active earth pressure			
	Surcharge load	Hq		1.221		3.000		3.663
Wet soil	triangle load	Hwet		13.553		2.000		27.106
Sat.soil	rectangular load	Hsat–1						
	triangle load	Hsat–2						
	Water	Pw in						
		Pw out						
	Up life	Pu						
		Total	69.628	24.894			149.835	64.063

$$X' = \frac{Vo.Xo}{Vo\ tot} = \frac{149.835}{69.628} = 2.152\ m \qquad Y' = \frac{Ho.Yo}{Ho\ tot} = \frac{64.063}{24.894} = 2.573\ m$$

V = V/m' x L
= 69.63 x 3.00
= 208.88 ton

H = H/m' x L
= 24.89 x 3.00
= 74.68 ton

M = V x (X–(0.5 x W)) – (H x (Y–tb))

0.5 x W = 0.500 x 3.80
= 1.90 m

(X – (0.5xW)) = 2.152 – 1.90
= 0.25 m

(Y – tb) = 2.573 – 1.00
= 1.57 m

H x (Y – tb) = 74.68 x 1.57
= 117.51 m

= V x (X–(0.5 x W)) – (H x (Y–tb))
= 208.88 x 0.25 – 117.51
= 52.63 – 117.51
= (64.88) t.m

cld–aq

Project : Medan Flood Control	Japan International Cooperation Agency (JICA)	Calculation sheet
Channel : Medan Flood Way		Date
Structure: Br – P 8		Nos of sheet
Station : DU –19 + 00		Prepared by

II.2 PIER

II.2.1. Neutral axis of Pier

span	=	16.00 m	span	=	31.00 m
depth slab	=	0.200 m	depth slab	=	0.200 m
depth beam	=	0.900 m	depth beam	=	1.600 m
	=	1.100 m			1.8 m
thick of bearing	=	0.100 m	thick of bearing	=	0.100 m
depth of back wall	=	1.200 m	depth of back wall		1.9 m

Slab deck elv. = 36.925 m
Hwl elv = 34.08 m
Top pier elevation = 36.925 – 1.20 = 35.725 m

Ht	=	10.000	m								
H1	=	0.250	m	W1	=	0.40	m		Wf1	=	1.20 m
H2	=	1.200	m	W2	=	1.000	m		Wf2	=	1.40 m
H3	=	0.500	m	W3	=	0.600	m		Wf3	=	1.20 m
H5	=	1.000	m	W5	=	3.80	m		W5	=	3.80 m
H4	=	Ht	–	H2	–	H5	–	H12			
	=	10.000	–	1.2	–	1.00	–	0.3			
	=	7.50	m						W4	=	1.00 m
H6	=	0.500	m	W6	=	0.50	m				
H7	=	0.500	m	W7	=	0.500	m				
H8	=	7.500	m	W8	=	0.200	m				
H9	=	7.500	m	W9	=	0.200	m				
H10	=	0.300	m	W10	=	1.850	m				
H11	=	0.300	m	W11	=	1.850	m				
H12	=	0.300	m	W12	=	1.400	m				
Hf	=	1.000	+	0.300	=	1.300	m				

(1)	W1	=	0.400	X1 =	W5/2	–	W1/2				
					1.900	–	0.200			=	1.700 m
	H1	=	0.250	Y1=	Ht	–	H1/2				
					10.000	–	0.125			=	9.875 m
(2)	W2	=	1.000	X2 =	W5/2	+	W2/2				
					1.900	+	0.500			=	2.400 m
	H2	=	1.200	Y2=	H2/2	+	H4	+	Hf		
					0.600	+	7.500	+	1.300	=	9.400 m
(3)	W3	=	0.600	X3 =	W5/2	–	W3/2				
					1.900	–	0.300			=	1.600 m
	H3	=	0.500	Y3=	H4	+	H3/2	+	Hf		
					7.500	+	0.250	+	1.300	=	9.050 m
(4)	W4	=	1.000	X4 =	W5/2	–	W4/2				
					1.900	–	0.500			=	1.400 m
	H4	=	7.500	Y4=	H4/2	+	Hf				
					3.750	+	1.300			=	5.050 m
(5)	W5	=	3.800	X5 =	W5/2						
					1.900					=	1.900 m
	H5	=	1.000	Y5=	H5/2						
					0.500					=	0.500 m
(6)	W6	=	0.500	X6 =	W5/2	+	W4/2	+	W6/3		
					1.900	+	0.500	+	0.167	=	2.567 m
	H6	=	0.500	Y6=	H4	+	Hf	–	H6/3		
					7.500	+	1.300	–	0.167	=	8.633 m

pi-xy

(7)	W7	=	0.500	X7 =	W5/2	–	W7/3	–	W4/2		
					1.900	–	0.167	–	0.500	=	1.233 m
	H7	=	0.500	Y7=	Y6						
					8.633					=	8.633 m
(8)	W8	=	0.200	X8 =	W5/2	+	W4	+	W8/3		
					1.900	+	1.000	+	0.067	=	2.967 m
	H8	=	7.500	Y8=	H8/3	+	Hf				
					2.500	+	1.300			=	3.800 m
(9)	W9	=	0.200	X9 =	W5/2	–	W4	–	W9/3		
					1.900	–	1.000	–	0.067	=	0.833 m
	H9	=	7.500	Y9=	Y8						
					3.800					=	3.800 m
(10)	W10	=	1.850	X10=	W5/2	+	W12/2	+	W10/3		
					1.900	+	0.700	+	0.617	=	3.217 m
	H10	=	0.300	Y10=	H10/3	+	H5				
					0.100	+	1.000			=	1.100 m
(11)	W11	=	1.850	X11=	W11x2/3						
					1.233					=	1.233 m
	H11	=	0.300	Y11=	Y10						
					1.100					=	1.100 m
(12)	W12	=	1.400	X12 =	W12/2	+	Wf3				
					0.700	+	1.200			=	1.900 m
	H12	=	0.300	Y12=	H12/2	+	H5				
					0.150	+	1.000			=	1.150 m

Back fill

a. In case HWL

High water channal elv	=	28.289 m				
Base footing elevation	=	35.725	–	10.00	=	25.725 m
Top footing elevation	=	25.725	+	1.000	=	26.725 m
Depth of earth filling	=	Hwe elv	–	Top footing elv.		
	=	28.289	–	26.725	=	1.564 m
Depth of wet soil	=	0.000 m				
Depth of saturated soli HWL = Hstr						
Hstr	=	Hwe elv	–	Top footing elv.		
	=	28.289	–	26.725	=	1.564 m

a.1 soil wet condition

wet.l	Wwet.l	=	1.200	X1=	Wf1 / 2	+	W4	+	Wf3		
					0.600	+	0.000	+	0.000	=	0.000 m
	Hwet.l	=	0.000	Y1=	Hsat.l/2	+	Hf				
					0.000	+	7.500			=	0.000 m
wet.r	Wwet.r	=	1.200	X2=	W5/2						
					0.600					=	0.000 m
	Hwet.r	=	0.000	Y2=	Y1						
					0.000					=	0.000 m

a.2 soil saturated condition

sat–l	Wsat.l	=	1.200	X1=	Wf1 / 2	+	W4	+	Wf3		
					0.600	+	1.000	+	1.200	=	2.800 m
	Hsat.l	=	1.564	Y1=	Hsat.l/2	+	Hf				
					0.782	+	1.300			=	2.082 m
sat–r	Wsat.r	=	1.200	X2=	W5/2						
					0.600					=	0.600 m
	Hsat.r	=	1.564	Y2=	Y1						
					2.082					=	2.082 m

b. In case LWL

Lwl elv. = 27.284 m
Hwe elv. = 28.289 m
Depth of earth filling

pi-xy

H filling = Hwc elv − Top footing elv.
= 28.289 − 26.725 = 1.564 m

Depth of wet soil
H wet = Hwc elv − Lwl elv
= 28.289 − 26.725 = 1.564 m

Depth of saturation soil = 0.00 m

b.1 soil wet condition

wet.l	W wet.l	=	1.200	X1 =	Wf1 / 2	+	W4	+	Wf3		
					0.600	+	1.000	+	1.200	=	2.800 m
	Hwet.l	=	1.564	Y1 =	Hwet1	+	Hf				
					0.782	+	1.300			=	2.082 m
wet.r	W wet.r	=	1.200	X2 =	W5/2						
					0.600					=	0.600 m
	H wet.r	=	1.564	Y2 =	Y1						
					2.082					=	2.082 m

b.2 soil saturated condition, nothing

sat.l	W sat.l	=	1.200	X1 =	W sat1/2	+	W4	+	Wf2		
					0.600	+	1.000	+	1.200	=	0.000 m
	H sat.r	=	0.000	Y1 =	H sat1/2	+	H5				
					0.00	+	1.300			=	0.000 m
sat.r	W sat.l	=	1.200	X2 =	W sat2/2						
					0.600					=	0.000 m
	H sat.r	=	0.000	Y2 =	H sat2/2	+	H5				
					0.00	+	1.300			=	0.000 m

0

pi−xy

Project : Medan Flood Control Channel : Medan Flood Way Structure : Br − F 8 Station : DU −19 + 00	Japan International Cooperation Agency (JICA)	Calculation sheet Date Nos of sheet Prepared by

II.2.2 Axial load to Pier

a. Superstucture

Vertical load/m'

Length of pier = 3.80 m

Width of footing = 3.80 m

Vertical load on Pier

	L/s span = 16.00 m		
	total load		
Description	Dead load	Line load	total load ton
Total load	30.94	13.00	43.9
Reaction to pier	15.47	6.50	22.0
Load per m width	4.07	1.71	5.8

	L/s span = 31.00 m		
	total load		
Description	Dead load	Line load	p1.57Xtotal ton
Total load	70.71	30.00	100.7
Reaction to pier	35.36	15.00	50.4
Load per m width	9.30	3.95	13.3
Total load on Pi =	13.38	5.66	19.0

Siesmic coeffici = 0.15

Acting point of siesmic load

Horizontal load

Left side span

Heq = 0.150 x Rdl
= 0.150 x 4.071
= 0.611 ton/m'

W1 = 0.40 m H2 = 1.20 m
Wf3 = 1.40 m H4 = 7.50 m
Hf = 1.30 m

X = 0.300 + W1/2 + W5/2
= 0.300 + 0.20 + 1.90
= 2.400 m

Y = H2 + H4 + Hf
= 1.20 + 7.50 + 1.30
= 10.000 m

Horizontal load

Heq = 0.150 x Rdl
= 0.150 x 9.304
= 1.396 ton/m'

W1 = 0.40 m H3 = 1.00 m
W5 = 3.80 m H4 = 7.50 m
W3 = 0.60 m Hf = 1.30 m

pl−vh

X	=	W5/2	−	W1/2	−	W3/2
	=	1.900	−	0.20	−	0.30
	=	1.400	m			
Y	=	H3	+	H4	+	Hf
	=	0.50	+	7.50	+	1.30
	=	9.300	m			

Self weight

Sec-tion	width m	depth m	length m	nos	Yc t/m3	G / m'	Gv/m' m3	X m	Y m	G.X m3	G.Y m3
A1	0.40	0.250	2.80	1.00	2.40	0.672	0.672	1.700	9.875	1.142	6.64
A2	1.00	1.350	2.80	1.00	2.40	9.072	9.072	2.400	9.400	21.773	85.28
A3	0.50	1.00	2.80	1.00	2.40	3.360	3.360	1.600	9.050	5.376	30.41
A4	0.90	7.35	1.00	1.00	2.40	15.876	15.876	1.400	5.050	22.226	80.17
A5	3.80	1.00	3.80	1.00	2.40	34.656	34.656	1.900	0.500	65.846	17.33
A6	0.50	0.50	2.80	1.00	2.40	0.840	0.840	2.567	8.633	2.156	7.25
A7	0.50	0.50	2.80	1.00	2.40	0.840	0.840	1.233	8.633	1.036	7.25
A8	0.20	7.35	1.00	1.00	2.40	1.764	1.764	2.967	3.800	5.234	6.70
A9	0.20	7.35	1.00	1.00	2.40	1.764	1.764	0.833	3.800	1.469	6.70
A10	1.85	0.30	3.80	1.00	2.40	2.531	2.531	3.217	1.100	8.142	2.78
A11	1.85	0.30	3.80	1.00	2.40	2.531	2.531	1.233	1.100	3.120	2.78
A12	1.40	0.30	3.80	1.00	2.40	3.830	3.830	1.900	1.150	7.278	4.40
					sum		77.74			144.80	257.71
	Total load per meter						20.457			38.11	67.82

$$X = \frac{Gv/m'.X}{Gv/m'} = \frac{38.105}{20.457} = 1.863 \text{ m}$$

$$Y = \frac{Gv/m'.Y}{Gv/m'} = \frac{67.817}{20.457} = 3.315 \text{ m}$$

H−pier = 20.457 x 0.150 = 3.069 ton

c. Soil pressures

High water level

H wet = 0.000 m
H sat = 1.564 m
Wf1 = 1.200 m
Wf2 = 1.200 m

Sec-tion	width m	depth m	length m	nos	Yc t/m3	G / m'	Gv/m' m3	X m	Y m	G.X m3	G.Y m3
wet.l	1.200	0.000	1.00	1.00	1.850	0.000	0.000	0.000	0.000	0.00	0.00
wet.r	1.200	0.000	1.00	1.00	1.850	0.000	0.000	0.000	0.000	0.00	0.00
sat−1	1.200	1.564	1.00	1.00	2.000	3.754	3.754	2.800	2.082	10.510	7.81
sat−2	1.200	1.564	1.00	1.00	2.000	3.754	3.754	0.600	2.082	2.252	7.81
					sum		7.507			12.762	15.630

H−abt = 7.507 x 0.150 = 1.126 ton

pl−vh

$$X = \frac{Gv/m'.X}{Gv/m'} = \frac{12.762}{7.507} = 1.700 \text{ m}$$

$$Y = \frac{Gv/m'.Y}{Gv/m'} = \frac{15.630}{7.507} = 2.082 \text{ m}$$

b. Low water level

H wet = 1.564 m
H sat = 0.000 m
Wf1 = 1.200 m
Wf2 = 1.200 m

Sec-tion	width m	depth m	length m	nos	Yc t/m3	G / m'	Gv/m' m3	X m	Y m	G.X m3	G.Y m3	
wet.l	1.200	1.564	1.00	1.00	1.850	3.472	3.472	2.800	2.082	9.722	7.23	
wet.r	1.200	1.564	1.00	1.00	1.850	3.472	3.472	0.600	2.082	2.083	7.23	
sat.l	1.200	0.000	1.00	1.00	2.000	0.000	0.000	0.000	0.000	0.000	0.00	
sat.r	1.200	0.000	1.00	1.00	2.000	0.000	0.000	0.000	0.000	0.000	0.00	
					sum		6.944			11.805	14.458	

H−abt = 6.944 x 0.150 = 1.042 ton

Centre of gravity

$$X = \frac{Gv/m'.X}{Gv/m'} = \frac{11.805}{6.944} = 1.700 \text{ m} = 1.700 \text{ m}$$

$$Y = \frac{Gv/m'.Y}{Gv/m'} = \frac{14.458}{6.944} = 2.082 \text{ m} = 2.082 \text{ m}$$

pl−vh

Project : Medan Flood Control Channel : Medan Flood Way Structure : Br – F 8 Station : DU –19 + 00	Japan International Cooperation Agency (JICA)	Calculation sheet Date Nos of sheet Prepared by

II.2.3 Combined load
II.2.3.3 Earthquake condition (HWL)

Width	L	=	3.80	m		
Width of footing	W5	=	3.80	m		
Thick of footing	Hf	=	1.30	m		
	Wf1	=	1.20	m		
UP lift						
	H sat	=	1.564	m		
	P up	=	5.10	x	1.56 x	1.00
		=	7.976	ton		

Description	Dead load	Pedestrian load	total ton
		total load	
		L/s span =	
Total weight	30.94	13.00	43.940
Reaction to pier	15.47	6.50	21.970
Load per m width	4.07	1.71	5.782
		R/s span =	
Total weight	70.71	30.00	100.710
Reaction to pier	35.36	15.00	50.355
Load per m width	9.30	3.95	13.251
Total load to pier	13.38	5.66	19.033

Breking forces = 5 % x " D " load (SNI No.1725–1989–F).Dep.PU
Left side span = 0.05 x 1.71 = 0.086 ton
Right side span = 0.05 x 3.95 = 0.197 ton

	Item	V load/m'	H load /m'	Xo	Yo	V.Xo	H.Yo
Super structure							
Left side	V–sp	5.782	0.611	2.400	10.000	13.876	6.110
Right side	V–sp	13.251	1.40	1.400	9.30	18.552	12.983
Pier	V–pier	20.457	3.069	1.863	3.315	38.111	10.174
Breking forces L/s			0.086		10.000		0.855
Breking forces R/s			0.197		9.300		1.836
Back fill	V–bf	7.507	1.126	1.700	3.316	12.762	3.734
				Active earth pressure			
Up life	Pu1	(7.976)		1.900		(15.155)	0.000
	Total	39.020	6.485			68.146	35.691

$$X' = \frac{Vo.Xo}{Vo\ tot} = \frac{68.146}{39.020} = 1.746\ m \qquad Y' = \frac{Ho.Yo}{Ho\ tot} = \frac{35.691}{6.485} = 5.504\ m$$

V = V/m' x L = 39.02 x 3.80 = 148.28 ton

H = H/m' x L = 6.48 x 3.80 = 24.64 ton

M = V.(X–(0.5.W – H.(Y–tb)

0.5 x W = 0.50 x 3.80 = 1.90 m

(X –(0.5xW) = 1.75 – 1.90 = (0.15) m

(Y – tb) = 5.504 – 1.30 = 4.20 m

H x (Y – tb) = 24.64 x 4.20 = 103.59 t.m

= V x (X–(0.5 – (H x (Y–tb))

= 148.28 x (0.15) – 103.59

= (22.77) – 103.59

= (126.37) t.m

II.2.3.4 Earthquake condition (HWL)

	Wf1	=	1.20	m		
UP lift						
	H sat	=	0.000	m		
	P up	=	1.20	x	0.00 x	1.00
		=	0.00	ton		

	Item	V load/m'	H load /m'	Xo	Yo	V.Xo	H.Yo
Super structure							
Left side	V–sp	5.782	0.611	2.400	10.000	13.876	6.110
Right side	V–sp	13.251	1.396	1.400	9.300	18.552	12.983
Pier	V–pier	20.457	3.069	1.863	3.315	38.111	10.174
Breking forces L/s			0.086		10.000		0.855
Breking forces R/s			0.197		9.300		1.836
Back fill	V–bf	6.944	2.082	1.700	2.082	11.805	4.335
			Active earth pressure				
Up life	Pu1	0.000		0.000	0.000	0.000	
	Total	46.434	7.441		126.341	118.636	36.292

$$X' = \frac{Vo.Xo}{Vo\ tot} = \frac{126.341}{46.434} = 2.721\ m \qquad Y' = \frac{Ho.Yo}{Ho\ tot} = \frac{36.292}{7.441} = 4.877\ m$$

V = V/m' x L = 46.43 x 3.80 = 176.45 ton

H = H/m' x L = 7.44 x 3.80 = 28.28 ton

M = V.(X–(0.5.W – H.(Y–tb)

0.5 x W = 0.50 x 3.80 = 1.90 m

(X –(0.5xW) = 2.72 – 1.90 = 0.82 m

(Y – tb) = 4.877 – 1.30 = 3.58 m

H x (Y – tb) = 28.28 x 3.58 = 101.15 t.m

= V x (X–(0.5 – (H x (Y–tb))

= 176.45 x 0.82 – 101.15

= 144.84 – 101.15

= 43.69 t.m

Project : Medan Flood Control	Japan International Cooperation Agency (JICA)	Calculation sheet
Channel : Medan Flood Way		Date
Structure : Br – F 8		Nos of sheet
Station : DU –19 + 00		Prepared by

II.2.3 Combined load

II.2.3.1 Normal condition (HWL)

Width	L	=	3.80	m
Width of footing	W5	=	3.80	m
Thick of footing	Hf	=	1.30	m

Wf1 = 1.20 m

UP lift

H sat = 1.564 m

P up = 5.10 x 1.56 x 1.00

= 7.976 ton

total load

Description	Dead load	Pedestrian load	total ton
	L/s span =		
Total weight	30.94	13.00	43.940
Reaction to pier	15.47	6.50	21.970
Load per m width	4.07	1.71	5.782
	R/s span =		
Total weight	70.71	30.00	100.710
Reaction to pier	35.36	15.00	50.355
Load per m width	9.30	3.95	13.251
Total load to pier	13.38	5.66	19.033

Breking forces = 5 % x * D * load (SNI No.1725–1989–F).Dep.PU

Left side span = 0.05 x 1.71 = 0.086 ton

Right side span = 0.05 x 3.95 = 0.197 ton

	Item	V load/m'	H load /m'	Xo	Yo	V.Xo	H.Yo
Super structure							
Left side	V–sp	5.782		2.400		13.876	
Right side	V–sp	13.251		1.400		18.552	
Pier	V–pier	20.457		1.863		38.111	
Breking forces L/s			0.086		10.000		0.855
Breking forces R/s			0.197		9.300		1.836
Back fill	V–bf	7.507		1.700		12.762	
				Active earth pressure			
Up life	Pu1	(7.976)		1.900		(15.155)	
	Total	39.020	0.283			68.146	2.691

$$X' = \frac{Vo.Xo}{Vo\ tot} = \frac{68.146}{39.020} = 1.746\ m \qquad Y' = \frac{Ho.Yo}{Ho\ tot} = \frac{2.691}{0.283} = 9.512\ m$$

V = V/m' x L

= 39.02 x 3.80

= 148.28 ton

H = H/m' x L

= 0.28 x 3.80

= 1.08 ton

M = V.(X–(0.5.W)) – H.(Y–tb)

0.5 x W = 0.50 x 3.80

= 1.90 m

(X – (0.5xW)) = 1.75 – 1.90

= (0.15) m

(Y – tb) = 9.512 – 1.30

= 8.21 m

H x (Y – tb) = 1.08 x 8.21

= 8.83 t.m

= V x (X–(0.5 x V – (H x (Y–tb))

= 148.28 x (0.15) – 8.83

= (22.77) – 8.83

= (31.60) t.m

II.2.3.2 Normal condition (LWL)

UP lift

Wf1 = 1.20 m

H sat = 0.000 m

P up = 1.20 x 0.00 x 1.00

= 0.00 ton

	Item	V load/m'	H load /m'	Xo	Yo	V.Xo	H.Yo
Super structure							
Left side	V–sp	5.782		2.400		13.876	
Right side	V–sp	13.251		1.400		18.552	
Pier	V–pier	20.457		1.863		38.111	
Breking forces L/s			0.086		10.000		0.855
Breking forces R/s			0.197		9.300		1.836
Back fill	V–bf	6.944		1.700		11.805	
				Active earth pressure			
Up life	Pu1	0.000		0.000	0.000	0.000	
	Total	46.434	0.283		101.644	85.035	2.691

$$X' = \frac{Vo.Xo}{Vo\ tot} = \frac{101.644}{46.434} = 2.189\ m \qquad Y' = \frac{Ho.Yo}{Ho\ tot} = \frac{2.691}{0.283} = 9.512\ m$$

V = V/m' x L

= 46.43 x 3.80

= 176.45 ton

H = H/m' x L

= 0.28 x 3.80

= 1.08 ton

M = V.(X–(0.5.W)) – H.(Y–tb)

0.5 x W = 0.50 x 3.80

= 1.90 m

(X – (0.5xW)) = 2.19 – 1.90

= 0.29 m

(Y – tb) = 9.512 – 1.30

= 8.21 m

H x (Y – tb) = 1.08 x 8.21

= 8.83 t.m

= V x (X–(0.5 x V – (H x (Y–tb))

= 176.45 x 0.29 – 8.83

= 50.99 – 8.83

= 42.17 t.m

Project : Medan Flood Control	Japan International Cooperation Agency (JICA)	Calculation sheet	
Channel : Medan Flood Way		Date	
Structure : Br – F7		Nos of sheet	
Station : DU –19 + 00		Prepared by	

III. FOUNDATION

III.1.Pile for Abutment

III.1.1 Charateristic Value of Pile

III.1.1.1 Case – I Normal Condition

Beta = charateristic value of pile
kh = coeficient of horizontal subgrade reaction (kr/cm^3)
EI = flexural rigidity of pile
do = outer diameter of pile (cm)
Eo = modulus of deformation of the ground ontained from table

do	=	40.00 cm		
t	=	7.500 cm		
do^2	=	1,600 cm^2		
di	=	(do–2.t)		
	=	40 –	15	
	=	25 cm		
di^2	=	625 cm^2		
do^2–di^2	=	1,600 –	625	
	=	975 cm		
do^4	=	2,560,000 cm4		
di^4	=	390,625 cm4		
do^4– di^4	=	2,560,000 –	390,625	
	=	2,169,375 cm4		

Modulus elasticity

Modulus elasticity of concrete
Permanent load K – 400
Ec = 343,327 kg/cm2
Modulus elasticity of steel
Es = 1,897,200 kg/cm2

Inertia of pile

Inersia K–400 = @pi/64(do^4–di^4)
= 0.05 x 2,169,375
= 106,489 cm^4

Area of prestress

A prestressed = @pi/4 (do^2 – di^2)
= 0.79 x 975.00
= 765.76 cm^2

$$Beta = \left(\frac{kh.do}{4.E.I}\right)^{0.25}$$

kho = 1/30 x alpa x Eo
Alpha = 0.20 from table 3.5

Eo = 28 x N
= 28.00 x 10.00
= 280 kg/cm3

E.I = 343,327 x 106,489 = 3.66E+10 kg.cm2

4.E.I = 4 x 3.66E+10 = 1.46E+11 kg.cm2

Bh = @sqrt(do / B)

$$\frac{do}{B} = \frac{40.00}{0.00588039} = 6,802.27$$ ---> B find by trial

Bh = 82.48

$$(Bh / 30) = \frac{82.48}{30.00} = 2.75$$

(Bh/30) ^ –0.75 = 0.47

kh = 9.33 x 0.47

= 4.3715

$$B = \left(\frac{kh \times do}{4.EI}\right)^{0.25}$$ (2)--------equition

$$kh = \frac{Beta^4 \times 4.EI}{do}$$

$$kh = \frac{1.20E-09}{40.00} \times 1.46E+11$$

------ (1) = ------ (2)

4.3715 = 4.3716 kg/cm3

By trial value of " kh " left side = right side

kh = 4.3716 kg/cm3
= 4,371.57 tom/m3
B = 0.00588 cm–1
B = 0.588039 m–1
ch kh x do = 4.3716 x 40.00
= 174.86

Allowance Horizontal Force

Normal Condition

$$Han = \frac{kh \times do}{B} \times delta$$

$$= \frac{174.86}{0.01} \times 1.00$$

= 29,736.57 kg

= 29.737 ton

kho	=	1/30	x	Alpa	x	Eo
	=	0.03	x	1	x	280
	=	9.33 kg/cm3				

kh = kho x {(Beta h)/30}^−0.75 (1)--------equition

Beta h = Bh
Beta = B
Bh = @sqrt(do / B)
do = 40.00
----- = ---------- = 6,802.27
B = 0.00588039 ---> B find by trial

Bh = 82.48

(Bh / 30) = 82.48 / 30.00 = 2.75

(Bh/30)^−0.7 = 0.47

kh = 9.33 x 0.47

= 4.3715

$$B = \left(\frac{kh \times do}{4.EI}\right)^{0.25} \quad (2)\text{--------equition}$$

$$kh = \frac{Beta^4 \times 4.EI}{do}$$

$$kh = \frac{1.20E-09}{40.00} \times 1.48E+11$$

------ (1) = ------ (2)

4.3715	=	4.3716 kg/cm3

By trial value of " kh " left side = right side

kh	=	4.3716 kg/cm3
	=	4,371.57 tom/m3
B	=	0.00588 cm−1
B	=	0.588039 m−1
kh x do	=	4.3716 x 40.00
	=	174.86

Allowance Horizontal Force

Normal Condition

$$Han = \frac{kh \times do}{B} \times delta$$

$$= \frac{174.86}{0.01} \times 1.00$$

= 29,736.57 kg

= 29.737 ton

charc−n

4 - 484

Project	: Medan Flood Control	Japan International Cooperation Agency (JICA)	Calculation sheet
Channal	: Medan Flood Way		Date
Structure	: Br − F8		Nos of sheet
Station	: DU −19 + 00		Prepared by

III.1.1.2 Earthquake Condition

Beta = charateristic value of pile
kh = coeficient of horizontal subgrade reaction (kr/cm^3)
EI = flexural rigidity of pile
do = outer diameter of pile (cm)
Eo = modulus of deformation of the ground ontained from table

do	=	40.00 cm	
t	=	7.500 cm	
do^2	=	1,600 cm^2	
di	=	(do−2.t)	
	=	40 −	15
	=	25 cm	
di^2	=	625 cm^2	
do^2−di^2	=	1,600 −	625
	=	975 cm	
do^4	=	2,560,000 cm4	
di^4	=	390,625 cm4	
do^4− di^4	=	2,560,000 −	390,625
	=	2,169,375 cm4	

Modulus elasticity

Modulus elasticity of concrete
Temporary load K − 400
Ec = 514,991 kg/cm2
Modulus elasticity of steel
Es = 1,897,200 kg/cm2

Inertia of pile

Inersia K−400 = @pi/64(do^4−di^4)
= 0.05 x 2,169,375
= 108,469 cm^4

Area of prestress

A prestressed = @pi/4 (do^2 − di^2)
= 0.79 x 975.00
= 765.76 cm^2

$$Beta = \left(\frac{kh.do}{4.E.I}\right)^{0.25}$$

kho = 1/30 x alpa x Eo
Alpha = 0.20 from table 3.5

Eo = 28 x N
= 28.00 x 10.00
= 280 kg/cm3

E.I = 514,991 x 108,469 = 5.48E+10 kg.cm2

4.E.I = 4 x 5.48E+10 = 2.19E+11 kg.cm2

charc−q

kho	=	1/30	x	Alpa	x	Eo
	=	0.03	x	1	x	280
	=	9.33 kg/cm3				

kh = kho x {(Beta h)/30} ^ −0.75 (1)−−−−−−−equition

Beta h = Bh

Beta = B

Bh = @sqrt(do / B)

$$\frac{do}{B} = \frac{40.00}{0.00525865} = 7,606.51$$

---> B find by trial

Bh = 87.22

$$(Bh / 30) = \frac{87.22}{30.00} = 2.91$$

(Bh/30) ^ −0.7 = 0.45

kh = 9.33 x 0.45

= 4.1921

$$B = \left(\frac{kh \times do}{4.EI}\right)^{0.25}$$ (2)−−−−−−−equition

$$kh = \frac{Beta^4 \times 4.EI}{do}$$

$$kh = \frac{7.65E-10}{40.00} \times 2.19E+11$$

------ (1) = ------ (2)

4.1921	=	4.1937 kg/cm3

By trial value of " kh " left side = right side

kh	=	4.1937 kg/cm3		
	=	4,193.74 tom/m3		
B	=	0.00526 cm−1		
B	=	0.525865 m−1		
kh x do	=	4.1937	x	40.00
	=	167.75		

Allowance Horizontal Force

Normal Condition

$$Han = \frac{kh \times do}{B} \times delta$$

$$= \frac{167.75}{0.01} \times 1.00$$

= 31,899.73 kg

= 31.900 ton

charc−q

Project : Medan Flood Control Channel : Medan Flood Way Structure: Br − F8 Station : DU −19 + 00	Japan International Cooperation Agency (JICA)	Calculation sheet Date Nos of sheet Prepared by

III.1.2 Axial bearing load allowance for a pile

a. by soil

do = outer diameter of a pile (m)

di = inner diameter of a pile (m)

do = 0.40 m

t = 0.075 m

di = (do − (2 x t) m

= 0.40 − 0.150

= 0.25 m

do^2 = 0.1600 m2

di^2 = 0.0625 m2

do^2−di^2 = 0.1600 − 0.06

= 0.0975 m2

A prestressed = area of a pile (m2)

= 0.25 x 3.14 x(do^2 − di^2)

= 0.25 x 3.14 x 0.0975

= 0.0766 m2

Hard soil elv.	=	20.151	m		
Top deck elevation	=	36.925	m		
Depth of Abutment	=	7.000	m		
Base footing elv.	=	29.925	m		
Depth of pole	=	29.92	−	20.15	
	=	9.77	m		
say	=	10.00	m		

Length of pile = Lp

Lp = 10.00 m

ro = 0.20 m

U = 2.00 x @Pi x ro

= 2.00 x 3.14 x 0.20

= 1.26 m

As = total circumferential surface area of the pile (m2)

As = U x Lp

= 1.26 x 10.00

= 12.57 m2

N1 = 50.00

N = 40.00

N − value of embedded

N−value top	bot.	Elv. top	Elv. bot.	avrg depth	tot depth	avrg N−value	tot. N−value	Kind of soils	soil friction (t/m2)	lixfi
5.00	10.00	29.925	29.151	0.77	0.77	7.50	5.81	fine sand	6.80	5.26
10.00	8.00	29.151	28.151	1.00	1.77	9.00	9.00	do	6.80	6.80
8.00	6.00	28.151	27.151	1.00	2.77	7.00	7.00	do	6.80	6.80
6.00	6.00	27.151	26.151	1.00	3.77	6.00	6.00	do	6.80	6.80
6.00	10.00	26.151	25.151	1.00	4.77	8.00	8.00	do	6.80	6.80
10.00	14.00	25.151	24.151	1.00	5.77	12.00	12.00	do	6.80	6.80
14.00	19.00	24.151	23.151	1.00	6.77	16.50	16.50	do	6.80	6.80
19.00	41.00	23.151	22.151	1.00	7.77	30.00	30.00	do	6.80	6.80
41.00	43.00	22.151	21.151	1.00	8.77	42.00	42.00	silt	3.30	3.30
43.00	43.00	21.151	20.151	1.00	9.77	43.00	43.00	do	3.30	3.30
43.00	43.00	20.151	19.151	1.00	10.77	43.00	43.00	do	3.30	3.30
			sum	10.77		224.00			64.30	62.76

Average N−val = 224.00 : 10.77 = 20.79

Material is fine sand

$$N = \frac{N1 + N2^*}{2}$$

N2* = Mean N−value in the range from the tip of the pile to 4 x D

N2* = (43.00 + 43.00)/2

= 43.00

$$N = \frac{40.00 + 43.00}{2}$$

= 41.50 < 40

= 40

Ru = Ultimate bearing capacity of the pile

li = statum thickness with the skin friction power taken into account (m)

fi = maximum unit area skin friction power of statum with the skin friction power taken into account (t/m2)

4.D	=	4.00 x	0.40	=	1.60	m
l	=	0.50 x	1.60	=	0.80	m
l/D	=	0.80 :	0.40	=	2.00	
qd/N	=	8.00				
qd	=	8.00 x	N			
	=	8.00 x	40.00			
	=	320.00 ton/m2				
A	=	0.25.@pi.d^2				
qd.A	=	320 x	0.1257			
	=	40.21				
U	=	2 x @pi x ro				
	=	2.00 x	3.14	x	0.20	
	=	1.26 m				
Ru	=	qd.A + U.(total li.fi)				
	=	40.21 +	1.26	x	62.76	
	=	119.083 ton				

Length of pile filled by concrete = Lc

Lc = 3.33 m

Y soil = 2.00 t/m3

Ws = Effective weight of soil which replace by pile

= 0.25 @pi do^2 Lp Ysoil

= 0.25 x 3.14 x 0.16 x 10.00 x 2.00

= 2.51 ton

W = Effective weight of concrete which filled in the pile

= 0.25 @pi x di^2 Lc Y concrete

= 0.25 x 3.14 x 0.06 x 3.33 x 2.50

= 0.41 ton

Normal condition,

Force bearing capacity of a pile in abutment

Sn = 3.00 Permanent load safety factor

Sq = 2.00 Temporary load safety factor

$$Ran = \frac{1}{Sn} x(Ru - Ws) + Ws - W$$

$$= \frac{1.00}{3.00} x(119.08 - 2.51)+ 2.51 - 0.41$$

= 0.33 x(116.57)+ 2.10

= 38.86 + 2.10

= 40.96 ton/nos

b. by material

Rp = area of pile x compressive stress

= 765.76 x 350.00 : 3.00 SF = 3.00

= 89,339.04 kg

= 89.34 ton

R min. = 40.96 ton

Earth quake

$$Raq = \frac{1.00}{2.00} x(119.08 - 2.51)+ 2.51 - 0.41$$

= 0.50 x(116.57)+ 2.10

= 58.28 + 2.10

= 60.39 ton/nos

Case		V ton	H ton	M ton.m	Allowance bearing of pile Vertical	Allowance bearing of pile Horizontal	Nos of pile Vertical	Nos of pile Horizontal
		Normal condition						
case − I	Hwl	229.95	29.48	−57.66	40.96	31.66	5.61	0.72
case − II	Lwl	228.37	35.62	−21.54	40.96	31.66	5.58	0.87
		Earthquake condition						
case − III	Hwl	229.95	68.36	−134.11	60.39	32.69	3.81	1.13
case − IV	Lwl	228.37	68.90	−98.84	60.39	32.69	3.78	1.14

Project : Medan Flood Control	Japan International Cooperation Agency (JICA)	Calculation sheet	
Channel : Medan Flood Way		Date	
Structure : Br – F 8		Nos of sheet	
Station : DU –19 + 00		Prepared by	

III.1.3 Spring Constante of Prestressed Concrete Pile

III.1.3.1 Normal condition

Ep = Elasticity of precast prestressed pile concrete
h = axial length of pile above the design ground surface
Beta = charateristic value of pile
k = coeficient of horozontal sub grade reaction (kg/cm^2)
IE = flexural rigidity of pile
K1,K2,K3&K = spring constante
Kv = Axial force (axial spring constante)

di = do–2.t
de = do^2–di^2
df = do^4–di^4

do	t	di	do^2	di^2	de	do^4	di^4	df
cm	cm	cm	cm2	cm2	cm2	cm4	cm4	cm4
40	7.50	25.00	1,600	625	975	2,560,000	390,625	2,169,375

Ip = @pi/64 x (do^4–di^4)
= 0.0491 x 2,169,375
= 106,489 cm^4

Ap = 1/4.@pi.(do^2–di^2)
= 0.25 x 3.14 x 975
= 765.76 cm2

Ep = 343,327 kg/cm2
Lp = 10.00 m
= 1,000 cm

$$a = 0.041 \times \frac{Lp}{do} - 0.27$$

$$= 0.041 \times \frac{1{,}000}{40} - 0.27$$

$$= 0.041 \times 25.00 - 0.27$$

$$= 1.0250 - 0.27$$

$$= 0.7550$$

Spring constante on axial force = Kv

$$Kv = a \times \frac{Ap}{} \times \frac{Ep}{Lp}$$

$$= 0.7550 \times \frac{766}{} \times \frac{343{,}327}{1{,}000}$$

$$= 0.7550 \times 262{,}907$$

= 198,495 kg/cm
= 19,849 ton/m

kc – n

E.I = 343,327 x 106,489
= 3.656E+10 kg.cm2

4.EI = 4 x 3.656E+10
= 1.462E+11 kg.cm2
= 1.462E+11 x 1.00E–07
= 14,624 t.m2

2.EI = 7,312 t.m2
Beta = 0.588039 m–1
Beta^2 = 0.34579 m–2
Beta^3 = 0.2033 m–3

K1 = 4.EI.Beta^3
= 14,624 x 0.2033
= 2,974 ton/m

K2=K3 = 2.EI.Beta^2
= 7,312 x 0.3458
= 2,528 ton/rad

K4 = 2.EI.Beta
= 7,312 x 0.5880
= 4,300 ton.m/rad

kc – n

Project : Medan Flood Control	Japan International Cooperation Agency (JICA)	Calculation sheet	
Channel : Medan Flood Way		Date	
Structure : Br – F 8		Nos of sheet	
Station : DU –19 + 00		Prepared by	

III.1.3.2 Earthquake condition

Ep = Elasticity of precast prestressed pile concrete
h = axial length of pile above the design ground surface
Beta = charateristic value of pile
k = coeficient of horozontal sub grade reaction (kg/cm^2)
IE = flexural rigidity of pile
K1,K2,K3&K = spring constante
Kv = Axial force (axial spring constante)

di = do–2.t
de = do^2–di^2
df = do^4–di^4

do cm	t cm	di cm	do^2 cm2	di^2 cm2	de cm2	do^4 cm4	di^4 cm4	df cm4
40	7.50	25.00	1,600	625	975	2,560,000	390,625	2,169,375

Ip = @pi/64 x (do^4–di^4)
= 0.0491 x 2,169,375
= 106,469 cm^4

Ap = 1/4.@pi.(do^2–di^2)
= 0.25 x 3.14 x 975
= 765.76 cm2

Ep = 514,991 kg/cm2
Lp = 10.00 m
= 1,000 cm

$$a = 0.041 \times \frac{Lp}{do} - 0.27$$

$$= 0.041 \times \frac{1{,}000}{40} - 0.27$$

= 0.041 x 25.00 – 0.27

= 1.0250 – 0.27

= 0.7550

Spring constante on axial force = Kv

$$Kv = a \times \frac{Ap}{} \times \frac{Ep}{Lp}$$

$$= 0.7550 \times \frac{766 \times 343{,}327}{1{,}000}$$

= 0.7550 x 262,907
= 198,495 kg/cm
= 19,849 ton/m

kc – q

E.I = 514,991 x 106,469
= 5.484E+10 kg.cm2

4.EI = 4.00 x 5.484E+10
= 2.194E+11 kg.cm2
= 2.194E+11 x 1.00E–07
= 21,936 t.m2

2.EI = 10,968 t.m2
Beta = 0.525865 m–1
Beta^2 = 0.27653 m–2
Beta^3 = 0.1454 m–3

K1 = 4.EI.Beta^3
= 21,936 x 0.1454
= 3,190 ton/m

K2=K3 = 2.EI.Beta^2
= 10,968 x 0.2765
= 3,033 ton/rad

K4 = 2.EI.Beta
= 10,968 x 0.5259
= 5,768 ton.m/rad

kc – q

Project	: Medan Flood Control	Japan International Cooperation Agency (JICA)	Calculation sheet
Channel	: Medan Flood Way		Date
Structure	: Br – F 8		Nos of sheet
Station	: DU –19 + 00		Prepared by

III.1.4 Coefficient deflection of footing

III.1.4.1 Normal Condition

Axx = tot.(K1 x cos ^2 ø + Kv x sin ^2 ø)
Axy = tot.(Kv – K1) x sin ø x cos ø)
Ayx = tot.(Kv – K1) x sin ø x cos ø)
Axa = tot.(KV – K1) x Xi x (sin ø x cos ø) – (K2 x cos ø))
Aax = tot.(KV – K1) x Xi x (sin ø x cos ø) – (K2 x cos ø))
Ayy = tot.(KV x cos ^2 ø + (K1 x sin ^2 ø))
Aya = tot.(KV x cos ^2 ø + K1 x sin ^2 ø) x Xi + K2 x sin ø)
Aay = tot.(KV x cos ^2 ø + K1 x sin ^2 ø) x Xi + K2 x sin ø)
Aaa = tot.(KV x cos ^2 ø + K1 x sin ^2 ø) x Xi ^2 ^ + (K2 + K3).Xi sin ø + K4)

Right Abutment		Rows (1)	(2)	(3)
Nos. of row				
side		L/s	C/l	R/s
sign		(–)	0	(+)
angle		< 0	0	> 0
Xi	=	(1.25)	0.00	1.25
n	=	2.00	2.00	2.00
angle degree	=	0.0000	0.00	5.7100
sin ø	=	0.0000	0.00	0.10
cos ø	=	1.0000	1.0000	0.9950
sin ø x cosø	=	0.0000	0.00	0.10
sin ^2 ø	=	0.0000	0.00	0.01
cos ^2 ø	=	1.0000	1.0000	0.9901
Xi ^2	=	1.5625	0.0000	1.5625
K1	=	2,974	2,974	2,974
K2	=	2,528	2,528	2,528
K3	=	2,528	2,528	2,528
K4	=	4,300	4,300	4,300
Kv	=	19,849	19,849	19,849
n.K1	=	5,948	5,948	5,948
n.K2	=	5,056	5,056	5,056
n.K3	=	5,056	5,056	5,056
n.K4	=	8,600	8,600	8,600
n.Kv	=	39,698	39,698	39,698
n.(K2 + K3)	=	10,112	10,112	10,112
Xi.(n.(K2 + K3))	=	(12,640)	0	12,640
Xi.(n.(K2 + K3)).sin ø	=	0	0	1,258
n.(Kv–K1)	=	33,750	33,750	33,750
n.(Kv–K1).sin ø.cosø	=	0	0	3,341
n.K1.cos ^2 ø	=	5,948	5,948	5,889
n.Kv.sin ^2 ø	=	0	0	393
n.Kv.cos ^2 ø	=	39,698	39,698	39,305
n.K1.sin ^2 ø	=	0	0	59
n.K1.sin ø.cosø	=	0	0	589
n.Kv.sin ø.cosø	=	0	0	3,930
Xi.(n.K1.sin ø.cos ø)	=	0	0	736
Xi.(n.Kv.sin ø.cos ø)	=	0	0	4,913

cos–disn

n.K2.cos ø	=	5,056	5,056	5,031
n.K2.sin ø	=	0	0	503
n.K3.sin ø	=	0	0	503
Xi.(n.Kv.cos ^2 ø)	=	(49,623)	0	49,131
Xi.(n.K1.sin ^2 ø)	=	0	0	74
Xi ^2.(n.Kv.cos ^2 ø)	=	62,028	0	61,414
Xi ^2.(n.K1.sin ^2 ø)	=	0	0	92
Xi.(n.K2.sin ø)	=	0	0	629
Xi.(n.K3.sin ø)	=	0	0	629

Axx = tot.(K1 x cos ^2 ø + Kv x sin ^2 ø)

					Total
n.K1.cos ^2 ø	=	5,948	5,948	5,889	
n.Kv.sin ^2 ø	=	0	0	393	
total		5,948	5,948	6,282	18,178
Axy = tot.(Kv – K1) x sin ø x cos ø)					
n.(Kv–K1).sin ø.cosø	=	0	0	3,341	
A xy	=	0	0	3,341	3,341
A yx	=	0	0	3,341	3,341
Axa = tot.(KV – K1) x Xi x (sin ø x cos ø) – (K2 x cos ø))					
Xi.(n.(Kv – K1).sin ø.c	=	0	0	4,177	
– n.K2.cos ø	=	(5,056)	(5,056)	(5,031)	
Axa		(5,056)	(5,056)	(854)	(10,966)
Aax	=	(5,056)	(5,056)	(854)	(10,966)
Ayy = tot.(KV x cos ^2 ø + (K1 x sin ^2 ø))					
n.Kv.cos ^2 ø	=	39,698	39,698	39,305	
n.K1.sin ^2 ø	=	0	0	59	
Ayy		39,698	39,698	39,364	118,760
Aya = tot.(KV x cos ^2 ø + K1 x sin ^2 ø) x Xi + K2 x sin ø)					
Xi.(n.Kv.cos ^2 ø)	=	(49,623)	0	49,131	
Xi.(n.K1.sin ^2 ø)	=	0	0	74	
n.K2.sin ø	=	0	0	503	
Aya	=	(49,623)	0	49,708	85
Aay	=	(49,623)	0	49,708	85
Aaa = tot.(KV x cos ^2 ø + K1 x sin ^2 ø) x Xi ^2 ^ + (K2+K3) Xi sin ø + K4)					
Xi ^2.(n.Kv.cos ^2 ø)	=	62,028	0	61,414	
Xi ^2.(n.K1.sin ^2 ø)	=	0	0	92	
n.(K2+K3).Xi.sin ø	=	0	0	1,258	
n.K4	=	8,600	8,600	8,600	
Aaa		70,628	8,600	71,364	150,592

cos–disn

Project : Medan Flood Control	Japan International Cooperation Agency (JICA)	Calculation sheet
Channel : Medan Flood Way		Date
Structure : Br – F 8		Nos of sheet
Station : DU –19 + 00		Prepared by

III.1.4 Coefficient deflection of footing
III.1.4.2 Earthquake condition

Axx = tot.(K1 x cos ^2 ø + Kv x sin ^2 ø)
Axy = tot.(Kv – K1) x sin ø x cos ø)
Ayx = tot.(Kv – K1) x sin ø x cos ø)
Axa = tot.(KV – K1) x Xi x (sin ø x cos ø) – (K2 x cos ø))
Aax = tot.(KV – K1) x Xi x (sin ø x cos ø) – (K2 x cos ø))
Ayy = tot.(KV x cos ^2 ø + (K1 x sin ^2 ø))
Aya = tot.(KV x cos ^2 ø + K1 x sin ^2 ø) x Xi + K2 x sin ø)
Aay = tot.(KV x cos ^2 ø + K1 x sin ^2 ø) x Xi + K2 x sin ø)
Aaa = tot.(KV x cos ^2 ø + K1 x sin ^2 ø) x Xi^2 ^ + (K2 + K3).Xi sin ø + K4)

Right Abutment		Rows		
Nos. of row		(1)	(2)	(3)
side		L/s	C/l	R/s
sign		(–)	0	(+)
angle		< 0	0	> 0
Xi	=	(1.25)	0.00	1.25
n	=	2.00	2.00	2.00
angle degree	=	0.0000	0.00	5.7100
sin ø	=	0.0000	0.00	0.10
cos ø	=	1.0000	1.0000	0.9950
sin ø x cosø	=	0.0000	0.00	0.10
sin ^2 ø	=	0.0000	0.00	0.01
cos ^2 ø	=	1.0000	1.0000	0.9901
Xi^2	=	1.5625	0.0000	1.5625
K1	=	3,190	3,190	3,190
K2	=	3,033	3,033	3,033
K3	=	3,033	3,033	3,033
K4	=	5,768	5,768	5,768
Kv	=	19,849	19,849	19,849
n.K1	=	6,380	6,380	6,380
n.K2	=	6,066	6,066	6,066
n.K3	=	6,066	6,066	6,066
n.K4	=	11,536	11,536	11,536
n.Kv	=	39,698	39,698	39,698
n.(K2 + K3)	=	12,132	12,132	12,132
Xi.(n.(K2 + K3))	=	(15,165)	0	15,165
Xi.(n.(K2 + K3)).sin ø	=	0	0	1,509
n.(Kv–K1)	=	33,318	33,318	33,318
n.(Kv–K1).sin ø.cosø	=	0	0	3,298
n.K1.cos ^2 ø	=	6,380	6,380	6,317
n.Kv.sin ^2 ø	=	0	0	393
n.Kv.cos ^2 ø	=	39,698	39,698	39,305
n.K1.sin ^2 ø	=	0	0	63
n.K1.sin ø.cosø	=	0	0	632
n.Kv.sin ø.cosø	=	0	0	3,930
Xi.(n.K1.sin ø.cos ø)	=	0	0	790
Xi.(n.Kv.sin ø.cos ø)	=	0	0	4,913

cos–disq

n.K2.cos ø	=	6,066	6,066	6,036	
n.K2.sin ø	=	0	0	604	
n.K3.sin ø	=	0	0	604	
Xi.(n.Kv.cos ^2 ø)	=	(49,623)	0	49,131	
Xi.(n.K1.sin ^2 ø)	=	0	0	79	
Xi ^2.(n.Kv.cos ^2 ø)	=	62,028	0	61,414	
Xi ^2.(n.K1.sin ^2 ø)	=	0	0	99	
Xi.(n.K2.sin ø)	=	0	0	754	
Xi.(n.K3.sin ø)	=	0	0	754	

Axx = tot.(K1 x cos^2 ø + Kv x sin ^2 ø)

					Total
n.K1.cos ^2 ø	=	6,380	6,380	6,317	
n.Kv.sin ^2 ø	=	0	0	393	
total		6,380	6,380	6,710	19,470
Axy = tot.(Kv – K1) x sin ø x cos ø)					
n.(Kv–K1).sin ø.cosø	=	0	0	3,298	
A xy	=	0	0	3,298	3,298
A yx	=	0	0	3,298	3,298
Axa = tot.(KV – K1) x Xi x (sin ø x cos ø) – (K2 x cos ø))					
Xi.(n.(Kv – K1).sin ø.c	=	0	0	4,123	
– n.K2.cos ø	=	(6,066)	(6,066)	(6,036)	
Axa		(6,066)	(6,066)	(1,913)	(14,045)
Aax	=	(6,066)	(6,066)	(1,913)	(14,045)
Ayy = tot.(KV x cos ^2 ø + (K1 x sin ^2 ø))					
n.Kv.cos ^2 ø	=	39,698	39,698	39,305	
n.K1.sin ^2 ø	=	0	0	63	
Ayy		39,698	39,698	39,368	118,764
Aya = tot.(KV x cos ^2 ø + K1 x sin ^2 ø) x Xi + K2 x sin ø)					
Xi.(n.Kv.cos ^2 ø)	=	(49,623)	0	49,131	
Xi.(n.K1.sin ^2 ø)	=	0	0	79	
n.K2.sin ø	=	0	0	604	
Aya	=	(49,623)	0	49,814	191
Aay	=	(49,623)	0	49,814	191
Aaa = tot.(KV x cos ^2 ø + K1 x sin ^2 ø) x Xi^2 ^ + (K2+K3) Xi sin ø + K4)					
Xi ^2.(n.Kv.cos ^2 ø)	=	62,028	0	61,414	
Xi ^2.(n.K1.sin ^2 ø)	=	0	0	99	
n.(K2+K3).Xi.sin ø	=	0	0	1,509	
n.K4	=	11,536	11,536	11,536	
Aaa		73,564	11,536	74,558	159,658

cos–disq

Project	: Medan Flood Control	Japan International Cooperation Agency (JICA)	Calculation sheet
Channel	: Medan Flood Way		Date
Structure	: Br – F 8		Nos of sheet
Station	: DU –19 + 00		Prepared by

III.1.5 Displacement of head pile
III.1.5.1 Case – I Normal condition(I-W/L)

Axx	dx	+	Axy	dy	+	Axz	dz	=	H
Ayx	dx	+	Ayy	dy	+	Ayz	dz	=	V
Axz	dx	+	Ayz	dy	+	Azz	dz	=	M

18,178	dx	+	3,341	dy	+	(10,966)	dz	=	29.48 H
3,341	dx	+	118,760	dy	+	85	dz	=	210.50 V
(10,966)	dx	+	85	dy	+	150,592	dz	=	(25.15) M

det A

1.818E+04	118760	85
	85	150592
3341	3341	85
	−10966	150592
−10966	3341	118760
	−10966	85

+	18178	x(	118760	x	150592	−	85	x	85)		
	18178	x(	17884305920	−	−7225	)				=	3.25E+14
−	3341	x(	3341	x	150592	−	−10966	x	85)		
	3341	x(	503127872	−	932110	)				=	−1.68E+12
+	−10966	x(	3341	x	85	−	−10966	x	118760)		
	−10966	x(	283985	−	1302322160	)				=	−1.43E+13
											3.09E+14

$$\frac{1}{\det} = \frac{1}{3.09E+14}$$

Kolactor

a11	1.19E+05	8.50E+01	+(	1.19E+05	x	1.51E+05	)−(	8.50E+01	x	8.50E+01	)=	C11	
	8.50E+01	1.51E+05	+(	1.79E+10			)−(	7.23E+03	)		=	1.79E+10	
a12	3.34E+03	8.50E+01	−(	3.34E+03	x	1.51E+05	)−(−1.10E+04	x	8.50E+01	)=	C12		
	−1.10E+04	1.51E+05	−(	5.03E+08			)−(−9.32E+05	)		=	−5.04E+08		
a13	3.34E+03	1.19E+05	+(	3.34E+03	x	8.50E+01	)−(−1.10E+04	x	1.19E+05	)=	C13		
	−1.10E+04	8.50E+01	+(	2.84E+05			)−(−1.30E+09	)		=	1.30E+09		
a21	3.34E+03	−1.10E+04	−(	3.34E+03	x	1.51E+05	)−(	8.50E+01	x	−1.10E+04	)=	C21	
	8.50E+01	1.51E+05	−(	5.03E+08			)−(−9.32E+05	)		=	−5.04E+08		
a22	1.82E+04	−1.10E+04	+(	1.82E+04	x	1.51E+05	− −1.10E+04	x	−1.10E+04	)=	C22		
	−1.10E+04	1.51E+05	+(	2.74E+09			− 1.20E+08	)		=	2.62E+09		
a23	1.82E+04	3.34E+03	+(	1.82E+04	x	8.50E+01	− −1.10E+04	x	3.34E+03	)=	C23		
	−1.10E+04	8.50E+01	+(	1.55E+08			− −3.66E+07	)		=	−3.82E+07		
a31	3.34E+03	−1.10E+04	+(	3.34E+03	x	8.50E+01	− 1.19E+05	x	−1.10E+04	)=	C31		
	1.19E+05	8.50E+01	+(	2.84E+05			− −1.30E+09	)		=	1.30E+09		
a32	1.82E+04	−1.10E+04	−(	1.82E+04	x	8.50E+01	− 3.34E+03	x	−1.10E+04	)=	C32		
	3.34E+03	8.50E+01	−(	1.55E+08			− −3.66E+07	)		=	−3.82E+07		
a33	1.82E+04	3.34E+03	+(	1.82E+04	x	1.19E+05	− 3.34E+03	x	3.34E+03	)=	C33		
	3.34E+03	1.19E+05	+(	2.15E+09			− 1.12E+07	)		=	2.15E+09		

C =

1.79E+10	−5.04E+08	1.30E+09
−5.04E+08	2.62E+09	−3.82E+07
1.30E+09	−3.82E+07	2.15E+09

Adj C = C t =

1.79E+10	−5.04E+08	1.30E+09
−5.04E+08	2.62E+09	−3.82E+07
1.30E+09	−3.82E+07	2.15E+09

$A^{-1} = \frac{\text{adj A}}{\det A} = \frac{1}{\det A} \times$

1.79E+10	−5.04E+08	1.30E+09
−5.04E+08	2.62E+09	−3.82E+07
1.30E+09	−3.82E+07	2.15E+09

=

2.95E+01	1.30E+09	−2.51E+01
2.95E+01	−3.82E+07	−2.51E+01
2.95E+01	2.15E+09	−2.51E+01

1.79E+10	x	2.95E+01	+	−5.04E+08	x	2.11E+02	+	1.30E+09	x	−2.51E+01				
−5.04E+08	x	2.95E+01	+	2.62E+09	x	2.11E+02	+	−3.82E+07	x	−2.51E+01				
1.30E+09	x	2.95E+01	+	−3.82E+07	x	2.11E+02	+	2.15E+09	x	−2.51E+01				

$X = A^{-1}.b = \frac{1.00E+00}{3.09E+14} \times$

5.27E+11	+	−1.06E+11 + −3.26E+10
−1.49E+10	+	5.51E+11 + 9.60E+08
3.84E+10	+	−8.04E+09 + −5.40E+10

$X = \frac{1.00E+00}{3.09E+14} \times$

3.86E+11		1.26E−03
5.37E+11	=	1.74E−03
−2.37E+10		−7.65E−05

$X = \begin{vmatrix} dx \\ dy \\ dz \end{vmatrix} =$

dx	0.00125630
dy	0.00173719
dz	(0.00007650)

Control

3,341.00	dx	+	118,760.00	dy	+	85.00 dz	= 210.50
3341	x	0.0012563032	=	4.19730906			
118760	x	0.0017371943	=	206.309193			
85	x	−0.000076505	=	−0.0065029			
				210.5	=	210.5	

Project	: Medan Flood Control	Japan International Cooperation Agency (JICA)	Calculation sheet
Channel	: Medan Flood Way		Date
Structure	: Br – F 8		Nos of sheet
Station	: DU –19 + 00		Prepared by

III.1.5 Displacement of head pile
III.1.5.2 Case – II Normal condition (L.W.L)

Axx	dx	+	Axy	dy	+	Axz	dz	=	H
Ayx	dx	+	Ayy	dy	+	Ayz	dz	=	V
Axz	dx	+	Ayz	dy	+	Azz	dz	=	M

18,178	dx	+	3,341	dy	+	(10,966)	dz	=	35.82 H
3,341	dx	+	118,760	dy	+	85	dz	=	208.88 V
(10,966)	dx	+	85	dy	+	150,592	dz	=	11.06 M

det A

1.818E+04	118760	85
	85	150592
3341	3341	85
	−10966	150592
−10966	3341	118760
	−10966	85

+	18178	x(	118760	x	150592	−	85	x	85)		
	18178	x(	17884305920	−	−7225	)				=	3.25E+14
−	3341	x(	3341	x	150592	−	−10966	x	85)		
	3341	x(	503127872	−	932110	)				=	−1.68E+12
+	−10966	x(	3341	x	85	−	−10966	x	118760)		
	−10966	x(	283985	−	1302322160	)				=	−1.43E+13
											3.09E+14

$$\frac{1}{\det} = \frac{1}{3.09E+14}$$

Kolactor

a11	1.19E+05	8.50E+01	+(	1.19E+05	x	1.51E+05	)−(	8.50E+01	x	8.50E+01	)=	C11	
	8.50E+01	1.51E+05	+(	1.79E+10			)−(	7.23E+03	)		=	1.79E+10	
a12	3.34E+03	8.50E+01	−(	3.34E+03	x	1.51E+05	)−(−1.10E+04	x	8.50E+01	)=	C12		
	−1.10E+04	1.51E+05	−(	5.03E+08			)−(−9.32E+05	)		=	−5.04E+08		
a13	3.34E+03	1.19E+05	+(	3.34E+03	x	8.50E+01	)−(−1.10E+04	x	1.19E+05	)=	C13		
	−1.10E+04	8.50E+01	+(	2.84E+05			)−(−1.30E+09	)		=	1.30E+09		
a21	3.34E+03	−1.10E+04	−(	3.34E+03	x	1.51E+05	)−(	8.50E+01	x	−1.10E+04	)=	C21	
	8.50E+01	1.51E+05	−(	5.03E+08			)−(−9.32E+05	)		=	−5.04E+08		
a22	1.82E+04	−1.10E+04	+(	1.82E+04	x	1.51E+05	− −1.10E+04	x	−1.10E+04	)=	C22		
	−1.10E+04	1.51E+05	+(	2.74E+09			− 1.20E+08	)		=	2.62E+09		
a23	1.82E+04	3.34E+03	+(	1.82E+04	x	8.50E+01	− −1.10E+04	x	3.34E+03	)=	C23		
	−1.10E+04	8.50E+01	+(	1.55E+08			− −3.66E+07	)		=	−3.82E+07		
a31	3.34E+03	−1.10E+04	+(	3.34E+03	x	8.50E+01	− 1.19E+05	x	−1.10E+04	)=	C31		
	1.19E+05	8.50E+01	+(	2.84E+05			− −1.30E+09	)		=	1.30E+09		
a32	1.82E+04	−1.10E+04	−(	1.82E+04	x	8.50E+01	− 3.34E+03	x	−1.10E+04	)=	C32		
	3.34E+03	8.50E+01	−(	1.55E+08			− −3.66E+07	)		=	−3.82E+07		
a33	1.82E+04	3.34E+03	+(	1.82E+04	x	1.19E+05	− 3.34E+03	x	3.34E+03	)=	C33		
	3.34E+03	1.19E+05	+(	2.15E+09			− 1.12E+07	)		=	2.15E+09		

C =

1.79E+10	−5.04E+08	1.30E+09
−5.04E+08	2.62E+09	−3.82E+07
1.30E+09	−3.82E+07	2.15E+09

Adj C = C t =

1.79E+10	−5.04E+08	1.30E+09
−5.04E+08	2.62E+09	−3.82E+07
1.30E+09	−3.82E+07	2.15E+09

$A^{-1} = \frac{\text{adj A}}{\det A} = \frac{1}{\det A} \times$

1.79E+10	−5.04E+08	1.30E+09
−5.04E+08	2.62E+09	−3.82E+07
1.30E+09	−3.82E+07	2.15E+09

=

3.56E+01	1.30E+09	3.56E+01
3.56E+01	−3.82E+07	2.09E+02
3.56E+01	2.15E+09	1.11E+01

1.79E+10	x	3.56E+01	+	−5.04E+08	x	2.09E+02	+	1.30E+09	x	1.11E+01				
−5.04E+08	x	3.56E+01	+	2.62E+09	x	2.09E+02	+	−3.82E+07	x	1.11E+01				
1.30E+09	x	3.56E+01	+	−3.82E+07	x	2.09E+02	+	2.15E+09	x	1.11E+01				

$X = A^{-1}.b = \frac{1.00E+00}{3.09E+14} \times$

6.37E+11	+	−1.05E+11 + 1.44E+10
−1.80E+10	+	5.47E+11 + −4.22E+08
4.64E+10	+	−7.98E+09 + 2.38E+10

$X = \frac{1.00E+00}{3.09E+14} \times$

5.46E+11		1.77E−03
5.26E+11	=	1.71E−03
6.22E+10		2.01E−04

$X = \begin{vmatrix} dx \\ dy \\ dz \end{vmatrix} =$

dx	0.00176674
dy	0.00170899
dz	0.00020113

Control

3,341.00	dx	+	118,760.00	dy	+	85.00 dz	= 208.88
3341	x	0.0017667433	=	5.90268944			
118760	x	0.0017089947	=	202.960214			
85	x	0.0002011318	=	0.01709620			
				208.88	=	208.88	

def-h2

Project	: Medan Flood Control	Japan International Cooperation Agency (JICA)	Calculation sheet
Channel	: Medan Flood Way		Date
Structure	: Br – F 8		Nos of sheet
Station	: DU –19 + 00		Prepared by

III.1.5 Displacement of head pile
III.1.5.3 Case – III Earthquake condition (HWL)

Axx	dx	+	Axy	dy	+	Axz	dz	= H
Ayx	dx	+	Ayy	dy	+	Ayz	dz	= V
Azx	dx	+	Azy	dy	+	Azz	dz	= M

19,470	dx	+	3,298	dy	+	(14,045)	dz	= 71.80 H
3,298	dx	+	118,764	dy	+	191	dz	= 210.50 V
(14,045)	dx	+	191	dy	+	159,858	dz	= (105.26) M

det A

1.947E+04	118764	191 =
	191	159858
3298	3298	191 =
	−14045	159858
−14045	3298	118764 =
	−14045	191

+	19470	x(	118764	x	159858	−	191	x	191)		
	19470	x(	18861822712	−	−36481	)				=	3.69E+14
−	3298	x(	3298	x	159858	−	−14045	x	191)		
	3298	x(	526552084	−	2682595	)				=	−1.75E+12
+	−14045	x(	3298	x	191	−	−14045	x	118764)		
	−14045	x(	829918	−	1668040380	)				=	−2.34E+13
											3.44E+14

$$\frac{1}{\det} = \frac{1}{3.44E+14}$$

Kolector

a11	1.19E+05	1.91E+02	+(	1.19E+05	x	1.60E+05	)−(	1.91E+02	x	1.91E+02	)=	C11
	1.91E+02	1.60E+05	+(	1.90E+10			)−(	3.65E+04	)		=	1.90E+10
a12	3.30E+03	1.91E+02	−(	3.30E+03	x	1.60E+05	)−(−1.40E+04	x	1.91E+02	)=	C12
	−1.40E+04	1.60E+05	−(	5.27E+08			)−(−2.68E+06	)		=	−5.29E+08
a13	3.30E+03	1.19E+05	+(	3.30E+03	x	1.91E+02	)−(−1.40E+04	x	1.19E+05	)=	C13
	−1.40E+04	1.91E+02	+(	6.30E+05			)−(−1.67E+09	)		=	1.67E+09
a21	3.30E+03	−1.40E+04	−(	3.30E+03	x	1.60E+05	)−(	1.91E+02	x	−1.40E+04	)=	C21
	1.91E+02	1.60E+05	−(	5.27E+08			)−(−2.68E+06	)		=	−5.29E+08
a22	1.95E+04	−1.40E+04	+(	1.95E+04	x	1.60E+05	− −1.40E+04	x	−1.40E+04	)=	C22
	−1.40E+04	1.60E+05	+(	3.11E+09			− 1.97E+06	)		=	2.91E+09
a23	1.95E+04	3.30E+03	+(	1.95E+04	x	1.91E+02	− −1.40E+04	x	3.30E+03	)=	C23
	−1.40E+04	1.91E+02	+(	3.72E+08			− −4.63E+07	)		=	−5.00E+07
a31	3.30E+03	−1.40E+04	+(	3.30E+03	x	1.91E+02	− 1.19E+05	x	−1.40E+04	)=	C31
	1.19E+05	1.91E+02	+(	6.30E+05			− −1.67E+09	)		=	1.67E+09
a32	1.95E+04	−1.40E+04	−(	1.95E+04	x	1.91E+02	− 3.30E+03	x	−1.40E+04	)=	C32
	3.30E+03	1.91E+02	−(	3.72E+08			− −4.63E+07	)		=	−5.00E+07
a33	1.95E+04	3.30E+03	+(	1.95E+04	x	1.19E+05	− 3.30E+03	x	3.30E+03	)=	C33
	3.30E+03	1.19E+05	+(	2.31E+09			− 1.09E+07	)		=	2.30E+09

$$C = \begin{vmatrix} 1.90E+10 & -5.29E+08 & 1.67E+09 \\ -5.29E+08 & 2.91E+09 & -5.00E+07 \\ 1.67E+09 & -5.00E+07 & 2.30E+09 \end{vmatrix} \qquad \text{Adj } C = Ct = \begin{vmatrix} 1.90E+10 & -5.29E+08 & 1.67E+09 \\ -5.29E+08 & 2.91E+09 & -5.00E+07 \\ 1.67E+09 & -5.00E+07 & 2.30E+09 \end{vmatrix}$$

$$A^{-1} = \frac{\text{adj } A}{\det A} = \frac{1}{\det A} \times \begin{vmatrix} 1.90E+10 & -5.29E+08 & 1.67E+09 \\ -5.29E+08 & 2.91E+09 & -5.00E+07 \\ 1.67E+09 & -5.00E+07 & 2.30E+09 \end{vmatrix} = \begin{vmatrix} 7.18E+01 & -1.99E+00 & 6.30E+00 \\ -1.99E+00 & 1.10E+00 & -1.89E+00 \\ 6.30E+00 & -1.89E+00 & 8.69E+00 \end{vmatrix}$$

$$A^{-1} = \begin{vmatrix} 7.47E+01 & -5.29E+08 & 1.67E+09 \\ 2.09E+02 & 2.91E+09 & -5.00E+07 \\ -6.49E+01 & -5.00E+07 & 2.30E+09 \end{vmatrix} \times \frac{1.00E+00}{3.44E+14} = \begin{vmatrix} 7.47E+01 & -1.53E+09 & 5.27E+09 \\ 2.09E+02 & 8.45E+09 & -1.58E+08 \\ -6.49E+01 & -1.45E+08 & 7.26E+09 \end{vmatrix} \times \frac{1.00E+00}{3.44E+14}$$

$$X = A^{-1}.b = \begin{vmatrix} 1.36E+12 & -1.11E+11 & -1.76E+11 \\ -3.79E+10 & 6.13E+11 & 5.27E+09 \\ 1.19E+11 & -1.05E+10 & -2.42E+11 \end{vmatrix} \times \frac{1.00E+00}{3.44E+14} = \begin{vmatrix} 1.97E+12 & 5.80E+11 & -1.33E+11 \\ 5.80E+11 & 1.60E+03 & 1.60E+03 \\ -1.33E+11 & 1.60E+03 & -3.86E-04 \end{vmatrix}$$

$$X = \begin{vmatrix} dx \\ dy \\ dz \end{vmatrix} = \begin{vmatrix} 0.00311211 \\ 0.00168662 \\ (0.00038766) \end{vmatrix}$$

Control

3,298.00	dx	+	118,764.00	dy	+	191.00 dz	= 210.50
3298	x		0.0031121147	=	10.2637543		
118764	x		0.0016686246	=	200.310288		
191	x		−0.0003676567	=	−0.0740424		
					210.5	=	210.5

Project	: Medan Flood Control	Japan International Cooperation Agency (JICA)	Calculation sheet
Channel	: Medan Flood Way		Date
Structure	: Br – F 8		Nos of sheet
Station	: DU –19 + 00		Prepared by

III.1.5 Displacement of head pile
III.1.5.4 Case – IV Earthquake condition (LWL)
Case –IV Low Water Level

Axx	dx	+	Axy	dy	+	Axz	dz	= H
Ayx	dx	+	Ayy	dy	+	Ayz	dz	= V
Azx	dx	+	Azy	dy	+	Azz	dz	= M

19,470	dx	+	3,298	dy	+	(14,045)	dz	= 74.68 H
3,298	dx	+	118,764	dy	+	191	dz	= 208.88 V
(14,045)	dx	+	191	dy	+	159,858	dz	= (64.86) M

det A

1.947E+04	118764	191 =
	191	159858
3298	3298	191 =
	−14045	159858
−14045	3298	118764 =
	−14045	191

+	19470	x(	118764	x	159858	−	191	x	191)		
	19470	x(	18861822712	−	−36481	)				=	3.69E+14
−	3298	x(	3298	x	159858	−	−14045	x	191)		
	3298	x(	526552084	−	2682595	)				=	−1.75E+12
+	−14045	x(	3298	x	191	−	−14045	x	118764)		
	−14045	x(	829918	−	1668040380	)				=	−2.34E+13
											3.44E+14

$$\frac{1}{\det} = \frac{1}{3.44E+14}$$

Kolector

a11	1.19E+05	1.91E+02	+(	1.19E+05	x	1.60E+05	)−(	1.91E+02	x	1.91E+02	)=	C11
	1.91E+02	1.60E+05	+(	1.90E+10			)−(	3.65E+04	)		=	1.90E+10
a12	3.30E+03	1.91E+02	−(	3.30E+03	x	1.60E+05	)−(−1.40E+04	x	1.91E+02	)=	C12
	−1.40E+04	1.60E+05	−(	5.27E+08			)−(−2.68E+06	)		=	−5.29E+08
a13	3.30E+03	1.19E+05	+(	3.30E+03	x	1.91E+02	)−(−1.40E+04	x	1.19E+05	)=	C13
	−1.40E+04	1.91E+02	+(	6.30E+05			)−(−1.67E+09	)		=	1.67E+09
a21	3.30E+03	−1.40E+04	−(	3.30E+03	x	1.60E+05	)−(	1.91E+02	x	−1.40E+04	)=	C21
	1.91E+02	1.60E+05	−(	5.27E+08			)−(−2.68E+06	)		=	−5.29E+08
a22	1.95E+04	−1.40E+04	+(	1.95E+04	x	1.60E+05	− −1.40E+04	x	−1.40E+04	)=	C22
	−1.40E+04	1.60E+05	+(	3.11E+09			− 1.97E+06	)		=	2.91E+09
a23	1.95E+04	3.30E+03	+(	1.95E+04	x	1.91E+02	− −1.40E+04	x	3.30E+03	)=	C23
	−1.40E+04	1.91E+02	+(	3.72E+08			− −4.63E+07	)		=	−5.00E+07
a31	3.30E+03	−1.40E+04	+(	3.30E+03	x	1.91E+02	− 1.19E+05	x	−1.40E+04	)=	C31
	1.19E+05	1.91E+02	+(	6.30E+05			− −1.67E+09	)		=	1.67E+09
a32	1.95E+04	−1.40E+04	−(	1.95E+04	x	1.91E+02	− 3.30E+03	x	−1.40E+04	)=	C32
	3.30E+03	1.91E+02	−(	3.72E+08			− −4.63E+07	)		=	−5.00E+07
a33	1.95E+04	3.30E+03	+(	1.95E+04	x	1.19E+05	− 3.30E+03	x	3.30E+03	)=	C33
	3.30E+03	1.19E+05	+(	2.31E+09			− 1.09E+07	)		=	2.30E+09

$$C = \begin{vmatrix} 1.90E+10 & -5.29E+08 & 1.67E+09 \\ -5.29E+08 & 2.91E+09 & -5.00E+07 \\ 1.67E+09 & -5.00E+07 & 2.30E+09 \end{vmatrix} \qquad \text{Adj } C = Ct = \begin{vmatrix} 1.90E+10 & -5.29E+08 & 1.67E+09 \\ -5.29E+08 & 2.91E+09 & -5.00E+07 \\ 1.67E+09 & -5.00E+07 & 2.30E+09 \end{vmatrix}$$

$$A^{-1} = \frac{\text{adj } A}{\det A} = \frac{1}{\det A} \times \begin{vmatrix} 1.90E+10 & -5.29E+08 & 1.67E+09 \\ -5.29E+08 & 2.91E+09 & -5.00E+07 \\ 1.67E+09 & -5.00E+07 & 2.30E+09 \end{vmatrix} = \begin{vmatrix} 7.47E+01 & -2.09E+02 & 6.49E+01 \\ -2.09E+02 & 1.16E+03 & -2.17E+02 \\ 6.49E+01 & -2.17E+02 & 8.69E+01 \end{vmatrix}$$

$$A^{-1} = \begin{vmatrix} 7.47E+01 & -5.29E+08 & 1.67E+09 \\ 2.09E+02 & 2.91E+09 & -5.00E+07 \\ -6.49E+01 & -5.00E+07 & 2.30E+09 \end{vmatrix} \times \frac{1.00E+00}{3.44E+14} = \begin{vmatrix} 7.47E+01 & -1.53E+09 & 5.27E+09 \\ 2.09E+02 & 8.45E+09 & -1.58E+08 \\ -6.49E+01 & -1.45E+08 & 7.26E+09 \end{vmatrix} \times \frac{1.00E+00}{3.44E+14}$$

$$X = A^{-1}.b = \begin{vmatrix} 1.42E+12 & -1.11E+11 & -1.08E+11 \\ -3.95E+10 & 8.08E+11 & 3.25E+09 \\ -1.05E+10 & 1.25E+11 & -1.49E+11 \end{vmatrix} \times \frac{1.00E+00}{3.44E+14} = \begin{vmatrix} 1.20E+12 & 5.72E+11 & -3.52E+10 \\ 5.72E+11 & 1.66E-03 & -1.02E-04 \\ -3.52E+10 & -1.02E-04 & -1.02E-04 \end{vmatrix}$$

$$X = \begin{vmatrix} dx \\ dy \\ dz \end{vmatrix} = \begin{vmatrix} 0.00348035 \\ 0.00166230 \\ (0.00010219) \end{vmatrix}$$

Control

3,298.00	dx	+	118,764.00	dy	+	191.00 dz	= 208.88
3298	x		0.0034803509	=	11.4781973		
118764	x		0.0016622994	=	197.421321		
191	x		−0.0001021933	=	−0.0195159		
					208.88	=	208.88

Project : Medan Flood Control	Japan International Cooperation Agency (JICA)	Calculation sheet
Channel : Medan Flood Way		Date
Structure : Br – F 8		Nos of sheet
Station : DU –19 + 00		Prepared by

II.1.6. Force at each pile head

III.1.6.1 Case–I ,Normal condition (HWL)

dxi = (dxi.cos e) – (dy + alpa.Xi).sin e)

dyi = (dxi.sin e) + (dy + alpa.Xi)cos e)

		Row of pile (1)	(2)	(3)	Total
	Side	L/s	C/l	R/s	
	sign	(–)	0	(+)	
	degree	< 0	0	> 0	
Xi	m	(1.25)	0.00	1.25	
n=nos pile/rows		2.00	2.00	2.00	
e	degree	0.00	0.00	5.71	
cos e	degree	1.000	1.000	0.995	
sin e	degree	0.000	0.000	0.099	
K1	t.m	2,974	2,974	2,974	
K2	t.m/rad	2,528	2,528	2,528	
K3	t.m/rad	2,528	2,528	2,528	
K4	t.m	4,300	4,300	4,300	
Kv	t.m	19,848	19,848	19,848	
dx	m	0.00125630	0.00125630	0.00125630	
dy	m	0.00173719	0.00173719	0.00173719	
alpa	rad	(0.00007650)	(0.00007650)	(0.00007650)	
dxi = dx cos e – (dy + alpa.Xi).sin e					
dx.cos e	=	0.00126	0.00126	0.00125	
dy	=	0.00174	0.00174	0.00174	
alpa	=	(0.00008)	(0.00008)	(0.00008)	
Alpa x Xi	=	0.00010	0.00000	(0.00010)	
dy + Alpa x Xi	=	0.00183	0.00174	0.00164	
(dy + alpa.Xi).sin e	=	0.00000	0.00000	0.00016	
dxi	=	0.00126	0.00126	0.00109	
dyi = dx sin e + (dy + alpa.Xi).cos e					
dx.sin e	=	0.0000000	0.0000000	0.0001250	
dy	=	0.0017372	0.0017372	0.0017372	
alpa	=	(0.0000765)	(0.0000765)	(0.0000765)	
Alpa x Xi	=	0.0000956	0.0000000	(0.0000956)	
dy + Alpa x Xi	=	0.0018328	0.0017372	0.0016416	
(dy + alpa.Xi).cos e	=	0.0018328	0.0017372	0.0016334	
dyi	=	0.0018328	0.0017372	0.0017584	
P ni=Kv.dyi		36.38	34.48	34.90	
K1.dxi	=	3.74	3.74	3.23	
K2.alpa	=	(0.19)	(0.19)	(0.19)	
P hi=K1.dxi–K2.alpa	=	3.93	3.93	3.43	
K3.dxi	=	3.18	3.18	2.75	
K4.alpa	=	(0.33)	(0.33)	(0.33)	
M ti=–K3.dxi+K4.alpa	=	(3.50)	(3.50)	(3.08)	
Mti x n	=	(7.01)	(7.01)	(6.15)	(20.17)
Vi = Pni.cos e – Phi.sin e					
Pni.cos	=	36.38	34.48	34.73	
Phi.sin e	=	0.00	0.00	0.34	
Vi	=	36.38	34.48	34.39	
Hi= Pni.sin e + Phi.cos e					
Pni.sin e	=	0.0	0.0	3.5	
Phi.cos e	=	3.9	3.9	3.4	
Hi	=	3.93	3.93	6.88	
Hi.n	=	7.86	7.86	13.76	29.48
Vi.n	=	72.76	68.96	68.77	210.49
Vi.n.X	=	(90.94)	0.00	85.97	(4.98)
Mti.n	=	(7.01)	(7.01)	(6.15)	(20.17)
Mt=Mti.n + Vi.n.X	=	(97.95)	(7.01)	79.82	(25.15)

Total forces at footing of Abutment				Total forces at pile head		
Ho	=	29.48	ton	Hi.n = Ho	29.48	ton
Vo	=	210.49	ton	Vi.n = Vo	210.49	ton
Mo	=	(25.15)	ton	Mt = Mo	(25.15)	ton

Project : Medan Flood Control	Japan International Cooperation Agency (JICA)	Calculation sheet
Channel : Medan Flood Way		Date
Structure : Br – F 8		Nos of sheet
Station : DU –19 + 00		Prepared by

II.1.6. Force at each pile head

III.1.6.2 Case – II Normal condition (LWL)

dxi = (dxi.cos e) – (dy + alpa.Xi).sin e)

dyi = (dxi.sin e) + (dy + alpa.Xi)cos e)

		Row of pile (1)	(2)	(3)	Total
	Side	L/s	C/l	R/s	
	sign	(–)	0	(+)	
	degree	< 0	0	> 0	
Xi	m	(1.25)	0.00	1.25	
n=nos pile/rows		2.00	2.00	2.00	
e	degree	0.00	0.00	5.71	
cos e	degree	1.000	1.000	0.995	
sin e	degree	0.000	0.000	0.099	
K1	t.m	2,974	2,974	2,974	
K2	t.m/rad	2,528	2,528	2,528	
K3	t.m/rad	2,528	2,528	2,528	
K4	t.m	4,300	4,300	4,300	
Kv	t.m	19,848	19,848	19,848	
dx	m	0.00176674	0.00176674	0.00176674	
dy	m	0.00170899	0.00170899	0.00170899	
alpa	rad	0.00020113	0.00020113	0.00020113	
dxi = dx cos e – (dy + alpa.Xi).sin e					
dx.cos e	=	0.00177	0.00177	0.00176	
dy	=	0.00171	0.00171	0.00171	
alpa	=	0.00020	0.00020	0.00020	
Alpa x Xi	=	(0.00025)	0.00000	0.00025	
dy + Alpa x Xi	=	0.00146	0.00171	0.00196	
(dy + alpa.Xi).sin e	=	0.00000	0.00000	0.00020	
dxi	=	0.00177	0.00177	0.00156	
dyi = dx sin e + (dy + alpa.Xi).cos e					
dx.sin e	=	0.0000000	0.0000000	0.0001758	
dy	=	0.0017090	0.0017090	0.0017090	
alpa	=	0.0002011	0.0002011	0.0002011	
Alpa x Xi	=	(0.0002514)	0.0000000	0.0002514	
dy + Alpa x Xi	=	0.0014576	0.0017090	0.0019604	
(dy + alpa.Xi).cos e	=	0.0014576	0.0017090	0.0019507	
dyi	=	0.0014576	0.0017090	0.0021265	
P ni=Kv.dyi		28.93	33.92	42.21	
K1.dxi	=	5.25	5.25	4.65	
K2.alpa	=	0.51	0.51	0.51	
P hi=K1.dxi–K2.alpa	=	4.75	4.75	4.14	
K3.dxi	=	4.47	4.47	3.95	
K4.alpa	=	0.86	0.86	0.86	
M ti=–K3.dxi+K4.alpa	=	(3.60)	(3.60)	(3.09)	
Mti x n	=	(7.20)	(7.20)	(6.17)	(20.58)
Vi = Pni.cos e – Phi.sin e					
Pni.cos	=	28.93	33.92	42.00	
Phi.sin e	=	0.00	0.00	0.41	
Vi	=	28.93	33.92	41.58	
Hi= Pni.sin e + Phi.cos e					
Pni.sin e	=	0.0	0.0	4.2	
Phi.cos e	=	4.7	4.7	4.1	
Hi	=	4.75	4.75	8.32	
Hi.n	=	9.49	9.49	16.64	35.62
Vi.n	=	57.86	67.84	83.17	208.87
Vi.n.X	=	(72.32)	0.00	103.96	31.64
Mti.n	=	(7.20)	(7.20)	(6.17)	(20.58)
Mt=Mti.n + Vi.n.X	=	(79.53)	(7.20)	97.79	11.06

Total forces at footing of Abutment				Total forces at pile head		
Ho	=	35.62	ton	Hi.n = Ho	35.62	ton
Vo	=	208.87	ton	Vi.n = Vo	208.87	ton
Mo	=	(11.08)	ton	Mt = Mo	08	ton

Project : Medan Flood Control Channel : Medan Flood Way Structure : Br – F 8 Station : DU –19 + 00	Japan International Cooperation Agency (JICA)	Calculation sheet Date Nos of sheet Prepared by

II.1.6. Force at each pile head

III.1.6.3 Case–III , Earthquake condition (HWL)

dxi = (dxi.cos e) – (dy + alpa.Xi).sin e)
dyi = (dxi.sin e) + (dy + alpa.Xi)cos e)

		Row of pile (1)	(2)	(3)	Total
	Side	L/s	C/l	R/s	
	sign	(–)	0	(+)	
	degree	< 0	0	> 0	
Xi	m	(1.25)	0.00	1.25	
n=nos pile/rows		2.00	2.00	2.00	
e	degree	0.00	0.00	5.71	
cos e	degree	1.000	1.000	0.995	
sin e	degree	0.000	0.000	0.099	
K1	t.m	3,190	3,190	3,190	
K2	t.m/rad	3,033	3,033	3,033	
K3	t.m/rad	3,033	3,033	3,033	
K4	t.m	5,768	5,768	5,768	
Kv	t.m	19,849	19,849	19,849	
dx	m	0.00311211	0.00311211	0.00311211	
dy	m	0.00168662	0.00168662	0.00168662	
alpa	rad	(0.00038766)	(0.00038766)	(0.00038766)	
dxi = dx cos e – (dy + alpa.Xi).sin e					
dx.cos e	=	0.00311	0.00311	0.00310	
dy	=	0.00169	0.00169	0.00169	
alpa	=	(0.00039)	(0.00039)	(0.00039)	
Alpa x Xi	=	0.00048	0.00000	(0.00048)	
dy + Alpa x Xi	=	0.00217	0.00169	0.00120	
(dy + alpa.Xi).sin e	=	0.00000	0.00000	0.00012	
dxi	=	0.00311	0.00311	0.00298	
dyi = dx sin e + (dy + alpa.Xi).cos e					
dx.sin e	=	0.0000000	0.0000000	0.0003096	
dy	=	0.0016866	0.0016866	0.0016866	
alpa	=	(0.0003877)	(0.0003877)	(0.0003877)	
Alpa x Xi	=	0.0004846	0.0000000	(0.0004846)	
dy + Alpa x Xi	=	0.0021712	0.0016866	0.0012020	
(dy + alpa.Xi).cos e	=	0.0021712	0.0016866	0.0011961	
dyi	=	0.0021712	0.0016866	0.0015057	
P ni=Kv.dyi		43.10	33.48	29.89	
K1.dxi	=	9.93	9.93	9.50	
K2.alpa	=	(1.18)	(1.18)	(1.18)	
P hi=K1.dxi–K2.alpa	=	11.10	11.10	10.67	
K3.dxi	=	9.44	9.44	9.03	
K4.alpa	=	(2.24)	(2.24)	(2.24)	
M ti=–K3.dxi+K4.alpa	=	(11.68)	(11.68)	(11.27)	
Mti x n	=	(23.35)	(23.35)	(22.53)	(69.23)
Vi = Pni.cos e – Phi.sin e					
Pni.cos	=	43.10	33.48	29.74	
Phi.sin e	=	0.00	0.00	1.06	
Vi	=	43.10	33.48	28.68	
Hi= Pni.sin e + Phi.cos e					
Pni.sin e	=	0.0	0.0	3.0	
Phi.cos e	=	11.1	11.1	10.6	
Hi	=	11.10	11.10	13.59	
Hi.n	=	22.21	22.21	27.19	71.60
Vi.n	=	86.19	66.96	57.35	210.50
Vi.n.X	=	(107.74)	0.00	71.69	(36.05)
Mti.n	=	(23.35)	(23.35)	(22.53)	(69.23)
Mt=Mti.n + Vi.n.X	=	(131.09)	(23.35)	49.16	(105.28)

Total forces at footing of Abutment				Total forces at pile head		
Ho	=	71.60	ton	Hi.n = Ho	71.60	ton
Vo	=	210.50	ton	Vi.n = Vo	210.50	ton
Mo	=	(105.28)	ton	Mt = Mo	(105.28)	ton

mnh–3

Project : Medan Flood Control Channel : Medan Flood Way Structure : Br – F 8 Station : DU –19 + 00	Japan International Cooperation Agency (JICA)	Calculation sheet Date Nos of sheet Prepared by

II.1.6. Force at each pile head

III.1.6.4 Case – IV Earthquake condition (LWL)

dxi = (dxi.cos e) – (dy + alpa.Xi).sin e)
dyi = (dxi.sin e) + (dy + alpa.Xi)cos e)

		Row of pile (1)	(2)	(3)	Total
	Side	L/s	C/l	R/s	
	sign	(–)	0	(+)	
	degree	< 0	0	> 0	
Xi	m	(1.25)	0.00	1.25	
n=nos pile/rows		2.00	2.00	2.00	
e	degree	0.00	0.00	5.71	
cos e	degree	1.000	1.000	0.995	
sin e	degree	0.000	0.000	0.099	
K1	t.m	3,190	3,190	3,190	
K2	t.m/rad	3,033	3,033	3,033	
K3	t.m/rad	3,033	3,033	3,033	
K4	t.m	5,768	5,768	5,768	
Kv	t.m	19,849	19,849	19,849	
dx	m	0.00348035	0.00348035	0.00348035	
dy	m	0.00166230	0.00166230	0.00166230	
alpa	rad	(0.00010219)	(0.00010219)	(0.00010219)	
dxi = dx cos e – (dy + alpa.Xi).sin e					
dx.cos e	=	0.00348	0.00348	0.00346	
dy	=	0.00166	0.00166	0.00166	
alpa	=	(0.00010)	(0.00010)	(0.00010)	
Alpa x Xi	=	0.00013	0.00000	(0.00013)	
dy + Alpa x Xi	=	0.00179	0.00166	0.00153	
(dy + alpa.Xi).sin e	=	0.00000	0.00000	0.00015	
dxi	=	0.00348	0.00348	0.00331	
dyi = dx sin e + (dy + alpa.Xi).cos e					
dx.sin e	=	0.0000000	0.0000000	0.0003463	
dy	=	0.0016623	0.0016623	0.0016623	
alpa	=	(0.0001022)	(0.0001022)	(0.0001022)	
Alpa x Xi	=	0.0001277	0.0000000	(0.0001277)	
dy + Alpa x Xi	=	0.0017900	0.0016623	0.0015346	
(dy + alpa.Xi).cos e	=	0.0017900	0.0016623	0.0015269	
dyi	=	0.0017900	0.0016623	0.0018732	
P ni=Kv.dyi		35.53	32.99	37.18	
K1.dxi	=	11.10	11.10	10.56	
K2.alpa	=	(0.31)	(0.31)	(0.31)	
P hi=K1.dxi–K2.alpa	=	11.41	11.41	10.87	
K3.dxi	=	10.56	10.56	10.04	
K4.alpa	=	(0.59)	(0.59)	(0.59)	
M ti=–K3.dxi+K4.alpa	=	(11.15)	(11.15)	(10.63)	
Mti x n	=	(22.29)	(22.29)	(21.26)	(65.84)
Vi = Pni.cos e – Phi.sin e					
Pni.cos	=	35.53	32.99	37.00	
Phi.sin e	=	0.00	0.00	1.08	
Vi	=	35.53	32.99	35.92	
Hi= Pni.sin e + Phi.cos e					
Pni.sin e	=	0.0	0.0	3.7	
Phi.cos e	=	11.4	11.4	10.8	
Hi	=	11.41	11.41	14.52	
Hi.n	=	22.82	22.82	29.03	74.68
Vi.n	=	71.06	65.99	71.83	208.88
Vi.n.X	=	(88.83)	0.00	89.79	0.96
Mti.n	=	(22.29)	(22.29)	(21.26)	(65.84)
Mt=Mti.n + Vi.n.X	=	(111.12)	(22.29)	68.53	(64.88)

Total forces at footing of Abutment				Total forces at pile head		
Ho	=	74.68	ton	Hi.n = Ho	74.68	ton
Vo	=	208.88	ton	Vi.n = Vo	208.88	ton
Mo	=	(64.88)	ton	Mt = Mo	(64.88)	ton

mnh–4

Project : Medan Flood Control Channel : Medan Flood Way Structure: Br – F 8 Station : DU – 19 + 00	Japan International Cooperation Agency (JICA)	Calculation sheet Date Nos of sheet Prepared by

III.1.7 Control stresses on pile

III.1.7.1 Case – I Normal Condition (HWL)

Steel pipe pile dia.400 mm

Depth embedded of pile = 10.00 m

Axial load Vi = 41,580 ton

= 41,580 kg

Moment Mi = 3.080 t.m

= 308,000 kg.cm

diameter do = 40.00 cm

outer radius ro = 20.00 cm

M' = Mx + Vi x ro

= 308,000 + 41,580 x 20.00

= 308,000 + 831,600

= 1,139,600 kg.cm

excentrisitas $e = \frac{Mx}{Vi}$

$= \frac{308,000 \text{ kg.cm}}{41,580 \text{ kg}}$

= 7.41 cm

concrete covering a' = 2.50 cm

t = 7.50 cm

Inner diameter di = 40.00 – 15.00

= 25.00

inner radius ri = 12.50 cm

ro^2 = 400.00

ri^2 = 156.25

ro^2–ri^2 = 400.00 – 156.25

ro^2–ri^2 = 243.75 cm2

Area of steel bar

As = 8 ø 16 – – Ø 16

8.00 x 2.0106 = 16.08 cm2

As = 16.08 cm2

$Ys = \frac{\text{Area of bar.Y bar}}{\text{Area of bar}}$

$= \frac{16.08 \times 12.50}{16.08}$

$= \frac{201.06}{16.08}$

= 12.50 cm

$n = \frac{1,897,200}{257,495}$

= 7.37

$p = \frac{\text{tot.Area of steel bar}}{@pi.ro^2}$

$= \frac{16.08}{3.14 \times 400.00}$

$= \frac{16.08}{1,256.64}$

p = 0.01280

a.p = 7.37 x 0.01280

= 1.54810

$alpa = \frac{ri}{ro} = \frac{12.50}{20.00} = 0.63$

e = 7.41 cm

$\frac{e}{ro} = \frac{7.41}{20.00} = 0.3704$

$\frac{e}{ro} = \frac{pi/4 - (5/12 - 1/6.\cos^2 pi)\sin pi.\cos pi + (a.@pi.p)/2.(ri/ro)^2}{\sin pi/3.(2 + \cos^2 pi) - pi.\cos pi - a.@pi.p \cos pi}$

trial value of pi – – – >>>> pi = 222.9161 degree

pi = 3.8906 rad.

e = pi/4 – (5/12 – 1/6.cos^2 pi)sin pi.cos pi + (n.@pi.p)/2.(alpa)^2

pi/4 = A	=	3.8906	:	4.00	=	0.97
n	=	7.37				
alpa	=	0.63 cm				
alpa^2	=	0.39 cm^2				
cos pi	=	(0.732351)				
Sin pi	=	(0.680927)				
Cos^2 pi	=	0.536339				
1/6.cos^2 pi	=	0.166667 x	0.536339	=	0.08939	
(5/12 – 1/6.cos^2 pi)	=	0.416667 –	0.089390	=	0.327277	
Sin pi cos pi	=	(0.680927) x	(0.732351)	=	0.50	
(5/12 – 1/6.cos^2 pi) x sin pi.cos pi = B	=	0.32728 x	(0.73235)		=	(0.23968)
(n.@pi.p)	=	1.55 x	3.14	=	4.86	
(n.@pi.p)/2	=	4.86 :	2.00	=	2.43	
(n.@pi.p)/2 x (alpa)^2 = C	=	2.43 x	0.39		=	0.95
sum A – B + C	=	0.97 –	(0.24) +	0.95	=	2.16

ro = sin pi/3.(2 + cos^2 pi)–pi.cos pi – a.@pi.p cos pi

(Sin pi)/3	=	(0.227)				
(2 + cos^2 pi)	=	2.000 +	0.536	=	2.536	
sin e /3 x (2 + cos^2 pi)	=	(0.227) x	2.536		=	(0.576)
pi.cos pi	=	3.891 x	(0.732)		=	(2.849)
a.@pi.p	=	1.548 x	3.142	=	4.864	
a.@pi.p cos pi	=	4.864 x	(0.732)		=	(3.562)
					=	5.835

$\frac{e}{ro} = \frac{2.16}{5.84} = 0.3705$

pi = 222.92 rad

$\frac{e}{ro} = 0.3704$

$C = \frac{1 - \cos pi}{2 \sin^3 pi/3 - pi \cos pi + \sin pi \cos^2 pi + pi/4 - \sin pi.\cos pi/4 - \sin^3 pi.\cos pi/6 \; @pi.ap.(alpa^2/2 - \cos pi)}$

Cos pi = (0.732)

sin pi = (0.681)

sin ^ 3 pi	=	(0.316)						
sin pi.cos pi	=	(0.681)	x	(0.732)	=	0.499		
Cos ^ 2pi	=	0.536						
1 − cos pi	=	1.000	−	(0.732)	=	1.732		
2.sin ^ 3 pi	=	2.000	x	(0.316)	=	(0.631)		
2.sin ^ 3 pi/3 = A	=	(0.631)	:	3.000			=	(0.210)
pi.cos pi = B	=	3.891	x	(0.732)			=	(2.849)
sin pi.cos ^ 2 pi = C	=	(0.681)	x	0.536			=	(0.365)
pi/4 = D	=	0.973					=	0.973
Cos pi/4	=	(0.732)	:	4.000	=	(0.183)		
sin pi.cos pi/4 = E	=	(0.681)	x	(0.183)			=	0.125
(sin ^ 3 pi.cos pi)	=	(0.316)	x	(0.732)	=	0.231		
(sin ^ 3 pi.cos pi)/6 = F	=	0.231	:	6.000			=	0.039
@.p	=	1.548						
@pi.np	=	3.142	x	1.548	=	4.864		
alpa	=	0.625						
alpa ^ 2	=	0.391						
alpa ^ 2/2	=	0.391	:	2.000	=	0.195		
alpa ^ 2/2 − cos pi	=	0.195	−	(0.732)	=	0.928		
@pi.np x alpa ^ 2/2	=	4.864	x	0.195	=	0.950		
@pi.np x alpa ^ 2/2 − cos ø = G	=	0.950	−	(0.732)			=	1.682
sum = A − B + C + D − E − F + G							=	4.765

$$C = \frac{1 - \cos pi}{2\sin^3 pi/3 - pi\cos pi + \sin pi\cos^2 pi + pi/4 - \sin pi.\cos pi/6 - @pi.np.(alpa^2/2 - \cos pi)}$$

$$C = \frac{1.732351}{4.765} = 0.36353$$

$$S = C \times \frac{alpa + \cos pi}{1 - \cos pi}$$

$$= 0.364 \times \frac{0.625 + (0.732)}{1.732}$$

$$= 0.364 \times (0.062)$$

$$= (0.023)$$

M' = 1,139,600 kg.cm

ro = 20.000 cm

stres on concrete = fc

$$fc = \frac{M'}{ro^3} \times C$$

$$= \frac{1,139,600}{8,000} \times 0.364$$

$$= 142.450 \times 0.364$$

$$= 51.79 \text{ kg/cm2} > 70 \text{ kg/cm2}$$

stres on steel = fs

$$fs = \frac{M'}{ro^3} \times S \times n$$

$$= \frac{1,139,600}{8,000} \times (0.023) \times 7 \text{ kg/cm2}$$

$$= 142.450 \times (0.023) \times 7 \text{ kg/cm2}$$

$$= (24) \text{ kg/cm2}$$

teg−a

Project : Medan Flood Control	Japan International Cooperation Agency (JICA)	Calculation sheet
Channel : Medan Flood Way		Date
Structure : Br − F 8		Nos of sheet
Station : DU −19 + 00		Prepared by

Left Side Abutment

III.1.8.1 Case − I, Normal Condition(HWL)

Ka	=	0.297		Ywet	=	1.850	t/m3
Ht	=	7.000	m	Ysat	=	2.000	t/m3
W	=	3.00	m	Yw	=	1.000	t/m3
q	=	1.000	t/m2	Yc	=	2.400	t/m3
alpha	=	0.00	degree	sin alpha	=	0.000	degree
				skew width	=	0.000	m

Total load (ton)			
Description	Dead load	Line load	Total load
weight	30.94	13.00	43.94
per Abt.	15.47	6.5	21.97
per m'	5.157	2.167	7.32

Section 1 − 1 H1 = 1.945 m W1 = 0.300 m

Load		Description							Vo	Ho	Xo	Yo	M = Vo.Yo
		Y	x	Hn	x	Wn	=	Weight					
		m		m		t/m3		ton	ton	ton	m	m	m
C1	=	2.40	x	1.945	x	0.30	=	1.400	1.400				
		q	x	H									
Pq	=	1.00	x	1.945			=	1.945		1.945		0.973	1.892
Pa1		0.5 x	Y	x	H1 ^ 2	x	Ka						
	=	0.5 x	1.85	x	3.78	x	0.297	=	1.039		1.039		0.648	
total									1.400	2.984			1.892

Section 2 − 2

H1	=	1.945	m	W1	=	0.30	m
H4	=	0.500	m	W4	=	0.55	m
H5	=	0.500	m	W5	=	0.55	m

Load		Description							Vo	Ho	Xo	Yo	M = Vo.Yo
		Yc	x	H	x	W	=	Weight					
		m		m		t/m3		ton	ton	ton	m	m	t.m
C1	=	2.40	x	1.945	x	0.30	=	1.400	1.400		0.150		0.210
C2	=	2.40	x	0.500	x	0.55	=	0.660	0.660		0.275		0.182
C3	= 0.5 x	2.40	x	0.500	x	0.55	=	0.330	0.330		0.275		0.091
E1	=	q	x	H	x	W							
	=	1.00	x	1.945	x	0.25	=	0.486	0.486		0.275		0.134
total									2.877				0.616

Section 3 − 3

Pe = 0.000 ton (by earthquake)

H1	=	1.945	m	W1	=	0.300	m	H1 + H4	=	2.445	m
H2	=	1.000	m	W2	=	1.000	m	He=H4+H5	=	1.000	m
H4	=	0.500	m	W4	=	0.550	m				
H5	=	0.500	m	W5	=	0.550	m				
H6	=	0.500	m	W6	=	0.200	m				
H7	=	0.500	m	W7	=	0.200	m				

mqh−1

Load		W		Description					Vo	Ho	Xo	Yo	M
		Y	x	H	x	W	=	Weight					
		m		m		t/m3		ton	ton	ton	m	m	t.m
C1	=		2.40	x	1.945	x	0.30	=	1.400	1.400				
C4	=		2.40	x	1.000	x	1.00	=	2.400	2.400				
C5	=	0.5 x	2.40	x	0.500	x	0.55	=	0.330	0.330				
C2	=		2.40	x	0.500	x	0.55	=	0.660	0.660				
C6	=		2.40	x	0.500	x	0.20	=	0.240	0.240				
C7	=	0.5 x	2.40	x	0.500	x	0.20	=	0.120	0.120				
Pe								=	0.00		0.00		1.00	0.00
Pq	=		1.00	x	2.445			=	2.445		2.445		1.223	2.989
Pa	=	0.5 x	1.85	x	2.445	x	0.297	=	0.672		0.672		0.815	0.547
Rv	=								7.323	7.323				
		sum								12.474	3.117			3.536

Section 4 – 4

Top deck el	=	36.925	m				
Hwl elv.	=	34.08	m				
H back fill	=	Ht	–	H3			
	=	7.00	–	1.00	=	6.00	m
Top footing	=	36.925	–	6.000	=	30.925	m
	=	36.925	–	34.08	=	2.845	m under footing
H wet soil	=	36.925	–	30.925	=	6.000	m
H sat soil	=	6.00	–	6	=	0	m

H1	=	1.945	m	W1	=	0.300 m
H2	=	4.100	m	W2	=	1.000 m
H4	=	0.500	m	W4	=	0.550 m
H5	=	0.500	m	W5	=	0.550 m
H6	=	0.500	m	W6	=	0.200 m
H7	=	0.500	m	W7	=	0.200 m

H wet = 6 : 3 + 0 = 2.000 m

mqh-1

Load		Description							Vo	Ho	Xo	Yo	M = Ho.Yo
		Y	x	Hn	x	Wn		Weight					
		m		m		m		ton	ton	ton	m	m	t.m
C1	=		2.40	x	1.95	x	0.30	=	1.400	1.400				
C4	=		2.40	x	1.00	x	1.00	=	2.400	2.400				
C5	=	0.5 x	2.40	x	0.50	x	0.55	=	0.330	0.330				
C2	=		2.40	x	0.50	x	0.55	=	0.660	0.660				
C6	=		2.40	x	1.00	x	0.20	=	0.480	0.480				
C7	=	0.5 x	2.40	x	0.50	x	0.20	=	0.120	0.120				
Pe								=	0		0.000		4.1	0.000
Pq1	=		1.00	x	6.00			=	6.000		6.000		3.000	18.000
Pw1	=	0.5 x	1.85	x	36.000	x	0.297	=	9.890		9.890		2.000	19.780
Ps1	=	0.5 x	2.00	x	0.000	x	0.297	=	0.000		0.000		0.000	0.000
Ps2			2.00	x	0	x	0.297	=	0.000		0.000		0.000	0.000
Pwl	=	0.5 x	1.00	x	0.090			=	0.045		0.045		0.100	0.005
Pwr	=	0.5 x	1.00	x	0.000			=	0.000		0.000		0.000	0.000
Rv	=								7.323	7.323				
		sum								12.714	15.935			37.785

Section 5 – 5

H1	=	0.300	m	W1	=	1.60 m
H2	=	1.000	m	W2	=	1.20 m
H wet.r	=	6.000	–	1.945	=	4.06 m
H sat.r	=	0.000	m			

mqh-1

Load		Description							Vo	Ho	Xo	Yo	M = Vo.Xo
		Y	x	H	x	W	=	Weight					
		m		m		t/m3		ton	ton	ton	m	m	t.m
C1	=	0.5 x	2.40	x	0.30	x	1.60	=	0.576	0.576		0.533		0.307
C2	=		2.40	x	1.00	x	1.20	=	2.880	2.880		0.600		1.728
El(wet)	=		1.85	x	4.06	x	1.60	=	12.003	12.003		0.800		9.602
El(sat)	=		2.00	x	0.000	x	1.60	=	0.000	0.000		0.800		0.000
Ul(up lift)	=		1.00	x	0.000	x	1.60	=	0.000	0.000		0.800		0.000
Rp 3								=	(34.390)	(34.390)		0.000		0.000
		total						=		(18.931)				11.637

Section 6 – 6

H 3.1	=	0.300	m	W1	=	1.60 m
H 3.2	=	1.000	m	W2	=	1.20 m
H wet	=	6.000	m			
H sat	=	0.000	m			

Load		Description							Vo	Ho	Xo	Yo	M = Vo.Xo
		Y	x	H	x	W	=	Weight					
		m		m		t/m3		ton	ton	ton	m	m	t.m
C 3.1	=	0.5 x	2.40	x	0.300	x	1.60	=	0.576	0.576		0.533		0.307
C 3.2	=		2.40	x	1.000	x	1.20	=	2.880	2.880		0.600		1.728
El(wet)	=		1.85	x	6.000	x	1.60	=	17.760	17.760		0.800		14.208
El(sat)	=		2.00	x	0.000	x	1.60	=	0.000	0.000		0.800		0.000
Ul(up lift)	=		1.00	x	0.000	x	1.60	=	0.000	0.000		0.800		0.000
Rp 1								=	(36.380)	(36.380)		0.975		(35.471)
		total						=		(15.164)				(19.227)

mqh-1

Project	: Medan Flood Control	Japan International Cooperation Agency (JICA)	Calculation sheet	
Channel	: Medan Flood Way		Date	
Structure	: Br – F 8		Nos of sheet	
Station	: DU –19 + 00		Prepared by	

Left Side Abutment

III.1.8.2 Case – II Normal Condition (LWL)

Ka	=	0.297	Ywet	=	1.850	t/m3
Ht	=	7.000 m	Ysat	=	2.000	t/m3
W	=	3.00 m	Yw	=	1.000	t/m3
q	=	1.000 t/m2	Yc	=	2.400	t/m3
alpha	=	0.00 degree	sin alpha	=	0.000	degree
			skew width	=	0.000	m

Total load (ton)			
Description	Dead load	Line load	Total load
weight	30.94	13.00	43.94
per Abt.	15.47	6.5	21.97
per m'	5.157	2.167	7.32

Section 1 – 1 H1 = 1.945 m W1 = 0.300 m

Load		Description							Vo	Ho	Xo	Yo	M = Vo.Yo
		Y	x	Hn	x	Wn	=	Weight					
		m		m		t/m3		ton	ton	ton	m	m	m
C1	=	2.40	x	1.945	x	0.30	=	1.400	1.400				
		q	x	H									
Pq	=	1.00	x	1.945			=	1.945		1.945		0.973	1.892
Pa1		0.5 x	Y	x	H1^2	x	Ka						
	=	0.5 x	1.85	x	3.78	x	0.297	=	1.039		1.039		0.648	
total									1.400	2.984			1.892

Section 2 – 2

H1	=	1.945 m	W1	=	0.30 m
H4	=	0.500 m	W4	=	0.55 m
H5	=	0.500 m	W5	=	0.55 m

Load		Description							Vo	Ho	Xo	Yo	M = Vo.Yo
		Yc	x	H	x	W	=	Weight					
		m		m		t/m3		ton	ton	ton	m	m	t.m
C1	=	2.40	x	1.945	x	0.30	=	1.400	1.400		0.150		0.210
C2	=	2.40	x	0.500	x	0.55	=	0.660	0.660		0.275		0.182
C3	=	0.5 x	2.40	x	0.500	x	0.55	=	0.330	0.330		0.275		0.091
E1	=	q	x	H	x	W							
	=	1.00	x	1.945	x	0.25	=	0.486	0.486		0.275		0.134
total									2.877				0.616

Section 3 – 3

Pe = 0.000 ton (by earthquake)

H1	=	1.945 m	W1	=	0.300 m	H1 + H4	=	2.445 m
H2	=	1.000 m	W2	=	1.000 m	He=H4+H5	=	1.000 m
H4	=	0.500 m	W4	=	0.550 m			
H5	=	0.500 m	W5	=	0.550 m			
H6	=	0.500 m	W6	=	0.200 m			
H7	=	0.500 m	W7	=	0.200 m			

mqh–2

Load		W		Description					Vo	Ho	Xo	Yo	M
		Y	x	H	x	W	=	Weight					
		m		m		t/m3		ton	ton	ton	m	m	t.m
C1	=	2.40	x	1.945	x	0.30	=	1.400	1.400				
C4	=	2.40	x	1.000	x	1.00	=	2.400	2.400				
C5	=	0.5 x	2.40	x	0.500	x	0.55	=	0.330	0.330			
C2	=	2.40	x	0.500	x	0.55	=	0.660	0.660				
C6	=	2.40	x	0.500	x	0.20	=	0.240	0.240				
C7	=	0.5 x	2.40	x	0.500	x	0.20	=	0.120	0.120			
Pe								=	0.00		0.00	1.00	0.00
Pq	=	1.00	x	2.445				=	2.445		2.445	1.223	2.989
Pa	=	0.5 x	1.85	x	2.445	x	0.297	=	0.672		0.672	0.815	0.547
Rv	=								7.323	7.323			
sum										12.474	3.117		3.536

Section 4 – 4

Top deck el	=	36.925 m					
lwl elv.	=	27.289 m					
H back fill	=	Ht	–	H3			
	=	7.00	–	1.00	=	6.00 m	
Top footing	=	36.925	–	6.000	=	30.925 m	
	=	36.925	–	27.289	=	9.636 m	under footing
H wet soil	=	36.925	–	30.925	=	6.000 m	
H sat soil	=	6.00	–	6	=	0 m	

H1	=	1.945 m	W1	=	0.300 m	
H2	=	4.100 m	W2	=	1.000 m	
H4	=	0.500 m	W4	=	0.550 m	
H5	=	0.500 m	W5	=	0.550 m	
H6	=	0.500 m	W6	=	0.200 m	
H7	=	0.500 m	W7	=	0.200 m	
H wet	=	6 :	3	+	0 =	2.000 m

mqh–2

Load		Description								Vo	Ho	Xo	Yo	M = Ho.Yo
		Y	x	Hn	x	Wn		Weight						
		m		m		m		ton		ton	ton	m	m	t.m
C1	=	2.40	x	1.95	x	0.30	=	1.400		1.400				
C4	=	2.40	x	1.00	x	1.00	=	2.400		2.400				
C5	=	0.5 x	2.40	x	0.50	x	0.55	=	0.330	0.330				
C2	=	2.40	x	0.50	x	0.55	=	0.660		0.660				
C6	=	2.40	x	1.00	x	0.20	=	0.480		0.480				
C7	=	0.5 x	2.40	x	0.50	x	0.20	=	0.120	0.120				
Pe								=	0		0.000		4.1	0.000
Pq1	=	1.00	x	6.00				=	6.000		6.000		3.000	18.000
Pwl	=	0.5 x	1.85	x	36.000	x	0.297	=	9.890		9.890		2.000	19.780
Ps1	=	0.5 x	2.00	x	0.000	x	0.297	=	0.000		0.000		0.000	0.000
Ps2		2.00	x	0	x	0.297		=	0.000		0.000		0.000	0.000
Pwl	=	0.5 x	1.00	x	0.090			=	0.045		0.045		0.100	0.005
Pwr	=	0.5 x	1.00	x	0.000			=	0.000		0.000		0.000	0.000
Rv	=									7.323	7.323			
sum										12.714	15.935			37.785

Section 5 – 5

H1	=	0.300 m	W1	=	1.60 m
H2	=	1.000 m	W2	=	1.20 m
H wet.r	=	6.000 –	1.945	=	4.06 m
H sat.r	=	0.000 m			

Load		Description Y	x	H	x	W	=	Weight	Vo	Ho	Xo	Yo	M = Vo.Xo
		m		m		t/m3		ton	ton	ton	m	m	t.m
C1	=	0.5 x	2.40	x	0.30	x	1.60	=	0.576	0.576		0.533		0.307
C2	=		2.40	x	1.00	x	1.20	=	2.880	2.880		0.600		1.728
E1(wet)	=		1.85	x	4.06	x	1.60	=	12.003	12.003		0.800		9.602
E1(sat)	=		2.00	x	0.000	x	1.60	=	0.000	0.000		0.800		0.000
U1(up lift)	=		1.00	x	0.000	x	1.60	=	0.000	0.000		0.800		0.000
Rp 3								=	(41.580)	(41.580)		0.000		0.000
		total						=		(26.121)				11.637

Section 6 – 6

H 3.1	=	0.300 m	W1	=	1.60 m
H 3.2	=	1.000 m	W2	=	1.20 m
H wet	=	6.000 m			
H sat	=	0.000 m			

Load		Description Y	x	H	x	W	=	Weight	Vo	Ho	Xo	Yo	M = Vo.Xo
		m		m		t/m3		ton	ton	ton	m	m	t.m
C 3.1	=	0.5 x	2.40	x	0.300	x	1.60	=	0.576	0.576		0.533		0.307
C 3.2	=		2.40	x	1.000	x	1.20	=	2.880	2.880		0.600		1.728
E1(wet)	=		1.85	x	6.000	x	1.60	=	17.760	17.760		0.800		14.208
E1(sat)	=		2.00	x	0.000	x	1.60	=	0.000	0.000		0.800		0.000
U1(up lift)	=		1.00	x	0.000	x	1.60	=	0.000	0.000		0.800		0.000
Rp 1								=	(28.930)	(28.930)		0.975		(28.207)
		total						=		(7.714)				(11.964)

Project	: Medan Flood Control	Japan International Cooperation Agency (JICA)	Calculation sheet
Channel	: Medan Flood Way		Date
Structure	: Br – F 8		Nos of sheet
Station	: DU –19 + 00		Prepared by

Left Side Abutment

III.1.8.3 Case – III Earthquake condition(HWL)

Ka	=	0.407	Ywet	=	1.850 t/m3
Ht	=	7.000 m	Ysat	=	2.000 t/m3
W	=	3.00 m	Yw	=	1.000 t/m3
q	=	0.500 t/m2	Yc	=	2.400 t/m3
alpha	=	0.00 degree	sin alpha	=	0.000 degree
			skew width	=	0.000 m

Total load (ton)

Description	Dead load	Line load	Total load
weight	30.94	13.00	43.94
per Abt.	15.47	6.5	21.97
per m'	5.157	2.167	7.32

Section 1 – 1 H1 = 1.945 m W1 = 0.300 m

Load		Description Y	x	Hn	x	Wn	=	Weight	Vo	Ho	Xo	Yo	M = Vo.Yo
		m		m		t/m3		ton	ton	ton	m	m	m
C1	=		2.40	x	1.945	x	0.30	=	1.400	1.400				
		q	x	H									
Pq	=		0.50	x	1.945			=	0.973		0.973		0.973	0.946
Pa1		0.5 x	Y	x	H1^2	x	Ka							
	=	0.5 x	1.85	x	3.78	x	0.407	=	1.424		1.424		0.648	
		total								1.400	2.397			0.946

Section 2 – 2

H1	=	1.945 m	W1	=	0.30 m
H4	=	0.500 m	W4	=	0.55 m
H5	=	0.500 m	W5	=	0.55 m

Load		Description Yc	x	H	x	W	=	Weight	Vo	Ho	Xo	Yo	M = Vo.Yo
		m		m		t/m3		ton	ton	ton	m	m	t.m
C1	=	2.40	x	1.945	x	0.30	=	1.400	1.400		0.150		0.210
C2	=	2.40	x	0.500	x	0.55	=	0.660	0.660		0.275		0.182
C3	=	0.5 x 2.40	x	0.500	x	0.55	=	0.330	0.330		0.275		0.091
E1	=	q	x	H	x	W							
	=	0.50	x	1.945	x	0.25	=	0.243	0.243		0.275		0.067
		total							2.634				0.549

Section 3 – 3

Pe = 0.000 ton (by earthquake)

H1	=	1.945 m	W1	=	0.300 m	H1 + H4	=	2.445 m
H2	=	1.000 m	W2	=	1.000 m	He=H4+H5	=	1.000 m
H4	=	0.500 m	W4	=	0.550 m			
H5	=	0.500 m	W5	=	0.550 m			
H6	=	0.500 m	W6	=	0.200 m			
H7	=	0.500 m	W7	=	0.200 m			

Load		W	Description Y	x	H	x	W	=	Weight	Vo	Ho	Xo	Yo	M
			m		m		t/m3		ton	ton	ton	m	m	t.m
C1	=		2.40	x	1.945	x	0.30	=	1.400	1.400				
C4	=		2.40	x	1.000	x	1.00	=	2.400	2.400				
C5	=	0.5 x	2.40	x	0.500	x	0.55	=	0.330	0.330				
C2	=		2.40	x	0.500	x	0.55	=	0.660	0.660				
C6	=		2.40	x	0.500	x	0.20	=	0.240	0.240				
C7	=	0.5 x	2.40	x	0.500	x	0.20	=	0.120	0.120				
Pe								=	0.00		0.00		1.00	0.00
Pq	=		0.50	x	2.445			=	1.223		1.223		1.223	1.495
Pa	=	0.5 x	1.85	x	2.445	x	0.407	=	0.920		0.920		0.815	0.750
Rv	=								7.323	7.323				
		sum								12.474	2.143			2.245

Section 4 – 4

Top deck el	=	36.925	m				
Hwl elv.	=	34.08	m				
H back fill	=	Ht	–	H3			
	=	7.00	–	1.00	=	6.00	m
Top footing	=	36.925	–	6.000	=	30.925	m
	=	36.925	–	34.08	=	2.845	m under footing
H wet soil	=	36.925	–	30.925	=	6.000	m
H sat soil	=	6.00	–	6	=	0	m

H1	=	1.945	m	W1	=	0.300	m
H2	=	4.100	m	W2	=	1.000	m
H4	=	0.500	m	W4	=	0.550	m
H5	=	0.500	m	W5	=	0.550	m
H6	=	0.500	m	W6	=	0.200	m
H7	=	0.500	m	W7	=	0.200	m

H wet = 6 : 3 + 0 = 2.000 m

Load		Description Y	x	Hn	x	Wn	=	Weight	Vo	Ho	Xo	Yo	M = Ho.Yo
		m		m		m		ton	ton	ton	m	m	t.m
C1	=	2.40	x	1.95	x	0.30	=	1.400	1.400				
C4	=	2.40	x	1.00	x	1.00	=	2.400	2.400				
C5	=	0.5 x 2.40	x	0.50	x	0.55	=	0.330	0.330				
C2	=	2.40	x	0.50	x	0.55	=	0.660	0.660				
C6	=	2.40	x	1.00	x	0.20	=	0.480	0.480				
C7	=	0.5 x 2.40	x	0.50	x	0.20	=	0.120	0.120				
Pe							=	0		0.000		4.1	0.000
Pq1	=	0.50	x	6.00			=	3.000		3.000		3.000	9.000
Pw1	=	0.5 x 1.85	x	36.000	x	0.407	=	13.553		13.553		2.000	27.106
Ps1	=	0.5 x 2.00	x	0.000	x	0.407	=	0.000		0.000		0.000	0.000
Ps2		2.00	x	0	x	0.407	=	0.000		0.000		0.000	0.000
Pwl	=	0.5 x 1.00	x	0.090			=	0.045		0.045		0.100	0.005
Pwr	=	0.5 x 1.00	x	0.000			=	0.000		0.000		0.000	0.000
Rv	=							7.323	7.323				
		sum							12.714	16.598			36.111

Section 5 – 5

H1	=	0.300	m	W1	=	1.60 m
H2	=	1.000	m	W2	=	1.20 m
H wet.r	=	6.000	–	1.945	=	4.06 m
H sat.r	=	0.000	m			

mqh–3

Load		Description Y	x	H	x	W	=	Weight	Vo	Ho	Xo	Yo	M = Vo.Xo
		m		m		t/m3		ton	ton	ton	m	m	t.m
C1	=	0.5 x 2.40	x	0.30	x	1.60	=	0.576	0.576		0.533		0.307
C2	=	2.40	x	1.00	x	1.20	=	2.880	2.880		0.600		1.728
E1(wet)	=	1.85	x	4.06	x	1.60	=	12.003	12.003		0.800		9.602
E1(sat)	=	2.00	x	0.000	x	1.60	=	0.000	0.000		0.800		0.000
U1(up lift)	=	1.00	x	0.000	x	1.60	=	0.000	0.000		0.800		0.000
Rp 3							=	(28.680)	(28.680)		0.000		0.000
		total					=		(13.221)				11.637

Section 6 – 6

H 3.1	=	0.300	m	W1	=	1.60 m
H 3.2	=	1.000	m	W2	=	1.20 m
H wet	=	6.000	m			
H sat	=	0.000	m			

Load		Description Y	x	H	x	W	=	Weight	Vo	Ho	Xo	Yo	M = Vo.Xo
		m		m		t/m3		ton	ton	ton	m	m	t.m
C 3.1	=	0.5 x 2.40	x	0.300	x	1.60	=	0.576	0.576		0.533		0.307
C 3.2	=	2.40	x	1.000	x	1.20	=	2.880	2.880		0.600		1.728
E1(wet)	=	1.85	x	6.000	x	1.60	=	17.760	17.760		0.800		14.208
E1(sat)	=	2.00	x	0.000	x	1.60	=	0.000	0.000		0.800		0.000
U1(up lift)	=	1.00	x	0.000	x	1.60	=	0.000	0.000		0.800		0.000
Rp 1							=	(43.100)	(43.100)		0.975		(42.023)
		total					=		(21.884)				(25.779)

mqh–3

Project : Medan Flood Control	Japan International Cooperation Agency (JICA)	Calculation sheet
Channel : Medan Flood Way		Date
Structure : Br – F 8		Nos of sheet
Station : DU –19 + 00		Prepared by

III.1.8 Combined load at Abutment section
III.1.8.4 Case–IV , Earthquake condition (LWL)
Left Side Abutment

Ka	=	0.407		Ywet	=	1.850	t/m3
Ht	=	7.000	m	Ysat	=	2.000	t/m3
W	=	3.00	m	Yw	=	1.000	t/m3
q	=	0.500	t/m2	Yc	=	2.400	t/m3
alpha	=	0.00	degree	sin alpha	=	0.000	degree
				skew width	=	0.000	m

Total load (ton)			
Description	Dead load	Line load	Total load
weight	30.94	13.00	43.94
per Abt.	15.47	6.5	21.97
per m'	5.157	2.167	7.32

Section 1 – 1 H1 = 1.945 m W1 = 0.300 m

Load		Description												M = Vo.Yo
			Y	x	Hn	x	Wn	=	Weight	Vo	Ho	Xo	Yo	
			m		m		t/m3		ton	ton	ton	m	m	m
C1	=		2.40	x	1.945	x	0.30	=	1.400	1.400				
			q	x	H									
Pq	=		0.50	x	1.945			=	0.973		0.973		0.973	0.946
Pa1		0.5 x	Y	x	H1^2	x	Ka							
	=	0.5 x	1.85	x	3.78	x	0.407	=	1.424		1.424		0.648	
		total								1.400	2.397			0.946

Section 2 – 2

H1	=	1.945	m	W1	=	0.30	m
H4	=	0.500	m	W4	=	0.55	m
H5	=	0.500	m	W5	=	0.55	m

Load		Description												M = Vo.Yo
			Ye	x	H	x	W	=	Weight	Vo	Ho	Xo	Yo	
			m		m		t/m3		ton	ton	ton	m	m	t.m
C1	=		2.40	x	1.945	x	0.30	=	1.400	1.400		0.150		0.210
C2	=		2.40	x	0.500	x	0.55	=	0.660	0.660		0.275		0.182
C3	=	0.5 x	2.40	x	0.500	x	0.55	=	0.330	0.330		0.275		0.091
E1	=		q	x	H	x	W							
	=		0.50	x	1.945	x	0.25	=	0.243	0.243		0.275		0.067
		total								2.634				0.549

Section 3 – 3

Pe = 0.000 ton (by earthquake)

H1	=	1.945	m	W1	=	0.300	m	H1 + H4 = 2.445 m
H2	=	1.000	m	W2	=	1.000	m	He=H4+H5 = 1.000 m
H4	=	0.500	m	W4	=	0.550	m	
H5	=	0.500	m	W5	=	0.550	m	
H6	=	0.500	m	W6	=	0.200	m	
H7	=	0.500	m	W7	=	0.200	m	

Load		W		Description					Vo	Ho	Xo	Yo	M
			Y	x	H	x	W	= Weight					
			m		m		t/m3	ton	ton	ton	m	m	t.m
C1	=		2.40	x	1.945	x	0.30	= 1.400	1.400				
C4	=		2.40	x	1.000	x	1.00	= 2.400	2.400				
C5	=	0.5 x	2.40	x	0.500	x	0.55	= 0.330	0.330				
C2	=		2.40	x	0.500	x	0.55	= 0.660	0.660				
C6	=		2.40	x	0.500	x	0.20	= 0.240	0.240				
C7	=	0.5 x	2.40	x	0.500	x	0.20	= 0.120	0.120				
Pe								= 0.00		0.00		1.00	0.00
Pq	=		0.50	x	2.445			= 1.223		1.223		1.223	1.495
Pa	=	0.5 x	1.85	x	2.445	x	0.407	= 0.920		0.920		0.815	0.750
Rv	=							7.323	7.323				
		sum							12.474	2.143			2.245

Section 4 – 4

Top deck e	=	36.925	m				
Iwl elv.	=	27.289	m				
H back fill	=	Ht	–	H3			
	=	7.00	–	1.00	=	6.00	m
Top footin	=	36.925	–	6.000	=	30.925	m
	=	36.925	–	27.289	=	9.636	m under footing
H wet soil	=	36.925	–	30.925	=	6.000	m
H sat soil	=	6.00	–	6	=	0	m

H1	=	1.945	m	W1	=	0.300	m
H2	=	4.100	m	W2	=	1.000	m
H4	=	0.500	m	W4	=	0.550	m
H5	=	0.500	m	W5	=	0.550	m
H6	=	0.500	m	W6	=	0.200	m
H7	=	0.500	m	W7	=	0.200	m
H wet	=	6	:	3	+	0	= 2.000 m

Load		Description								Vo	Ho	Xo	Yo	M = Ho.Yo
			Y	x	Hn	x	Wn		Weight					
			m		m		m		ton	ton	ton	m	m	t.m
C1	=		2.40	x	1.95	x	0.30	=	1.400	1.400				
C4	=		2.40	x	1.00	x	1.00	=	2.400	2.400				
C5	=	0.5 x	2.40	x	0.50	x	0.55	=	0.330	0.330				
C2	=		2.40	x	0.50	x	0.55	=	0.660	0.660				
C6	=		2.40	x	1.00	x	0.20	=	0.480	0.480				
C7	=	0.5 x	2.40	x	0.50	x	0.20	=	0.120	0.120				
Pe								=	0		0.000		4.1	0.000
Pq1	=		0.50	x	6.00			=	3.000		3.000		3.000	9.000
Pw1	=	0.5 x	1.85	x	36.000	x	0.407	=	13.553		13.553		2.000	27.106
Ps1	=	0.5 x	2.00	x	0.000	x	0.407	=	0.000		0.000		0.000	0.000
Ps2			2.00	x	0	x	0.407	=	0.000		0.000		0.000	0.000
Pwl	=	0.5 x	1.00	x	0.090			=	0.045		0.045		0.100	0.005
Pwr	=	0.5 x	1.00	x	0.000			=	0.000		0.000		0.000	0.000
Rv	=								7.323	7.323				
		sum								12.714	16.598			36.111

Section 5 – 5

H1	=	0.300	m	W1	=	1.60	m
H2	=	1.000	m	W2	=	1.20	m
H wet.r	=	6.000	–	1.945	=	4.06	m
H sat.r	=	0.000	m				

Load		Description Y	x	H	x	W	=	Weight	Vo	Ho	Xo	Yo	M = Vo.Xo
		m		m		t/m3		ton	ton	ton	m	m	t.m
C1	=	0.5 x 2.40	x	0.30	x	1.60	=	0.576	0.576		0.533		0.307
C2	=	2.40	x	1.00	x	1.20	=	2.880	2.880		0.600		1.728
E1(wet)	=	1.85	x	4.06	x	1.60	=	12.003	12.003		0.800		9.602
E1(sat)	=	2.00	x	0.000	x	1.60	=	0.000	0.000		0.800		0.000
U1(up lift)	=	1.00	x	0.000	x	1.60	=	0.000	0.000		0.800		0.000
Rp 3							=	(35.920)	(35.920)		0.000		0.000
		total					=		(20.461)				11.637

Section 6 – 6

H 3.1 = 0.300 m W1 = 1.60 m
H 3.2 = 1.000 m W2 = 1.20 m
H wet = 6.000 m
H sat = 0.000 m

Load		Description Y	x	H	x	W	=	Weight	Vo	Ho	Xo	Yo	M = Vo.Xo
		m		m		t/m3		ton	ton	ton	m	m	t.m
C 3.1	=	0.5 x 2.40	x	0.300	x	1.60	=	0.576	0.576		0.533		0.307
C 3.2	=	2.40	x	1.000	x	1.20	=	2.880	2.880		0.600		1.728
E1(wet)	=	1.85	x	6.000	x	1.60	=	17.760	17.760		0.800		14.208
E1(sat)	=	2.00	x	0.000	x	1.60	=	0.000	0.000		0.800		0.000
U1(up lift)	=	1.00	x	0.000	x	1.60	=	0.000	0.000		0.800		0.000
Rp 1							=	(35.410)	(35.410)		0.975		(34.525)
		total					=		(14.194)				(18.282)

mqh–4

Project	: Medan Flood Control	Japan International Cooperation Agency (JICA)	Calculation sheet
Channel	: Medan Flood Way		Date
Structure	: Br – Mf 8		Nos of sheet
Station	: Du 19 + 00		Prepared by

III.1.9 Resume forces on Abutment Section

Case – I,Normal Condition (HWL)

Case	Forces	Unit	Section 1	2	3	4	5	6
Case – I	Moment	t.m	1.892	0.616	3.536	37.785	11.637	19.227
		kg.cm	189,200	61,600	353,600	3,778,500	1,163,700	1,922,700
	Shear	ton	2.984	2.877	3.117	15.935	18.931	15.164
		kg	2,984	2,877	3,117	15,935	18,931	15,164
	Normal	ton	1.400	0.0	12.474	12.714	0.0	0.0
		kg	1,400	0.0	12,474	12,714	0.0	0.0

Case – II,Normal Condition (LWL)

Case	Forces	Unit	Section 1	2	3	4	5	6
Case – II	Moment	t.m	1.892	0.616	3.536	37.785	11.637	11.964
		kg.cm	189,200	61,600	353,600	3,778,500	1,163,700	1,196,400
	Shear	ton	2.984	2.877	3.117	15.935	26.121	7.714
		kg	2,984	2,877	3,117	15,935	26,121	7,714
	Normal	ton	1.400	0	12.474	12.714	0	0
		kg	1,400	0	12,474	12,714	0	0

Case – III,Earthquake Condition (HWL)

Case	Forces	Unit	Section 1	2	3	4	5	6
Case – III	Moment	t.m	0.946	0.549	2.245	36.111	11.637	25.779
		kg.cm	94,600	54,900	224,500	3,611,100	1,163,700	2,577,900
	Shear	ton	2.397	2.634	2.143	16.60	13.221	21.884
		kg	2,397	2,634	2,143	16,598	13,221	21,884
	Normal	ton	1.400	0	12.474	12.714	0	0
	-	kg	1,400	0	12,474	12,714	0	0

Case – IV,Earthquake Condition (LWL)

Case	Forces	Unit	Section 1	2	3	4	5	6
Case – IV	Moment	t.m	0.946	0.549	2.245	36.111	11.637	18.282
		kg.cm	94,600	54,900	224,500	3,611,100	1,163,700	1,828,200
	Shear	ton	2.40	2.634	2.143	16.598	20.461	14.194
		kg	2,397	2,634	2,143	16,598	20,461	14,194
	Normal	ton	1.40	0	12.474	12.714	0	0
		kg	1,400	0	12,474	12,714	0	0

mnh

Project : Medan Flood Control Channel : Medan Flood Way Structure : Br – Mf 8 Station : Du 19 + 00	Japan International Cooperation Agency (JICA)	Calculation sheet Date Nos of sheet Prepared by

III.1.10 Reinforcing steel bar of Abutment section

Section – 4

Item	Describtion	unit	Normal condition Calcu–lation	Earth quake condition Calcu–lation
	Allowance stresses			
concrete compressive	fc = K – 225	kg/cm2	*75*	*75*
steel tensile	fs	kg/cm2	*1400*	*1400*
concrete shear	tou without r.bar	kg/cm2	*8*	*8*
	tou with r.bar	kg/cm2	*20*	*20*
transformend	n = Es/Ec		*21*	*21*
Moment	M	t.m	37.785	36.111
		kg.cm	3,778,500	3,611,100
Shear	S	ton	15.935	16.598
		kg	15935	16598
Normal	N	ton	12.714	12.714
		kg	12,714	12,714
dimension	b	cm	*100*	*100*
	ht	cm	*100*	*100*
	d'	cm	*10*	*10*
	h	cm	*90*	*90*
	b.h	cm2	*9,000*	*9,000*
Calculation for reinfor–cement bar with steel full working	eo1=M/N	cm	297.19	284.03
	eo2=1/30.ht,> 2 cm	cm	3.33	3.33
	used eo2	cm	2.00	2.00
	eo=eo1+eo2	cm	299.19	286.03
	eo/ht (see table)		2.99	2.86
	C		7.60	7.60
	fk	cm	410.0	410.0
	100.ht	cm	10,000	10,000
	fk/100.ht	cm	0.0410	0.0410
	(fk/100.ht) ^ 2	cm	*0.0017*	*0.0017*
	e1=C.[fk/(100.ht)] ^ 2.ht	cm	*1.278*	*1.278*
	e2=0.15.ht	cm	*15.00*	*15.00*
	e=eo+e1+e2	cm	*315.47*	*302.30*
	ea=e+1/2.ht–d'	cm	355.47	342.30
	M' = N.ea	kg.cm	4,519,441	4,352,041
	n.M'	kg.cm	94,908,259	91,392,859
	b.fs	kg/cm	140,000	140,000
	n.M'/(b.fs)		677.92	652.81
	@sqrt(n.M'/(b.fs))		26.04	25.55
	Ca=h /@sqrt(n.M'/b.fs) see PBI 1971 N.I–2		*3.457*	*3.522*
	n.fc		1,575	1,575
	øo = fs / (n.fc)		0.8889	0.8889
	delta		0.60	0.60
	from table fined Ca		3.459	3.537
	fine ø > øo		2.125	2.175
	ø'		3.091	3.186
	ksi(j)		0.320	0.315
	zeta		0.895	0.896
	100 nw		9.343	8.923
	nw		0.09343	0.08923
	w		0.00445	0.00425
	ea/h		3.95	3.80
	from table fined I		4.58	2.310
	i.A = wbh		40.04	38.24
	A	cm2	8.74	16.55
	A' =delta.	cm2	5.246	9.933

A – used bar dia. 16 mm @ 12.5 cm,

Area @ bar	=	2.011		
nos of bar	=	10		
total area	=	10	x	2.011
(cm2)	=	20.11 cm2 >		8.74

A' – used bar dia. 13 mm @ 12.5 cm,

Area @ bar	=	1.327		
nos of bar	=	10		
total area	=	10	x	1.327
(cm2)	=	13.27 cm2 >		5.25

	steel bar full warking		
	n.ø		44.63
tension of bar	fs	kg/cm2	1,400.00
compressive concrete	fc' = fs / (n.ø)	kg/cm2	31.37
tensile of bar	fs' = fs / ø'	kg/cm2	452.93
	7/8.b.h	cm2	7,875.00
shear concrete	Tca = S / (7/8.b.h)	kg/cm2	2.02

Section – 5

Item	Describtion	unit	Normal condition Calcu–lation	Earth quake condition Calcu–lation
	Allowance stresses			
concrete compressive	fc = K – 225	kg/cm2	*75*	*75*
steel tensile	fs	kg/cm2	*1400*	*1400*
concrete shear	tou without r.bar	kg/cm2	*8*	*8*
	tou with r.bar	kg/cm2	*20*	*20*
transformend	n = Es/Ec		*21*	*21*
Moment	M	t.m	19.227	25.779
		kg.cm	1,922,700	2,577,900
Shear	S	ton	15.164	21.884
		kg	15164	21884
dimension	b	cm	*100*	*100*
	ht	cm	*1,300*	*1,300*
	d'	cm	*10*	*10*
	h	cm	*1,290*	*1,290*
	b.h	cm2	*129,000*	*129,000*
	M	kg.cm	1,922,700	2,577,900
	n.M	kg.cm	40,376,700	54,135,900
	b.fs	kg/cm	140,000	140,000
Calculation for reinfor–cement bar with steel full working	n.M / (b.fs)		288.41	386.69
	@sqrt(n.M /(b.fs))		16.98	19.66
	Ca=h /@sqrt(n.M/b.fs) see PBI 1971 N.I–2		*75.961*	*65.601*
	n.fc		1,575	1,575
	øo = fs / (n.fc)		0.8889	0.8889
	delta		1.00	1.00
	from table fined Ca		12.290	12.290
	fine ø > øo		8.091	8.091
	ø'		89.000	89.000
	ksi(j)		0.110	0.110
	zeta		0.963	0.963
	100 nw		0.688	0.688
	nw		0.00688	0.00688
	w		0.00033	0.00033
	A	cm2	42.26	42.26
	A' =delta.i.A	cm2	42.26	42.26

A – used bar dia. 25 mm @ 12.5 cm,

Area @ bar	=	4.909		
nos of bar	=	10		
total area	=	10	x	4.909
(cm2)	=	49.09 cm >		42.26 cm2

A' – used bar dia. 25 mm @ 12.5 cm,

Area @ bar	=	4.909		
nos of bar	=	10		
total area	=	10	x	4.909
(cm2)	=	49.09 cm2 >		42.26

	steel bar full warking		
	n.ø		169.91
tension of bar	fs	kg/cm2	1,400.00
compressive concrete	fc' = fs / (n.ø)	kg/cm2	8.24
tensile of bar	fs' = fs / ø'	kg/cm2	15.73
	7/8.b.h	cm2	112,875.00
shear concrete	Tca = S / (7/8.b.h)	kg/cm2	0.13

bar

bar

Project	: Medan Flood Control	Japan International	Calculation sheet
Channel	: Medan Flood Way	Cooperation Agency	Date
Structure	: Br – F8	(JICA)	Nos of sheet
Station	: DU –19 + 00		Prepared by

III. FOUNDATION
III.2.Pile for Pier
III.2.1 Charateristic Value of Pile
III.2.1.1 Normal Condition

Beta = charateristic value of pile
kh = coeficient of horizontal subgrade reaction (kr/cm^3)
EI = flexural rigidity of pile
do = outer diameter of pile (cm)
Eo = modulus of deformation of the ground ontained from table

do = 40.00 cm
t = 7.500 cm
do^2 = 1,600 cm^2
di = (do–2.t)
= 40 – 15
= 25 cm
di^2 = 625 cm^2
do^2–di^2 = 1,600 – 625
= 975 cm

do^4 = 2,560,000 cm4
di^4 = 390,625 cm4
do^4– di^4 = 2,560,000 – 390,625
= 2,169,375 cm4

Modulus elasticity

Modulus elasticity of concrete
Permanent load K – 400
Ec = 343,327 kg/cm2
Modulus elasticity of steel
Es = 1,897,200 kg/cm2

Inertia of pile
Inersia K–400 = @pi/64(do^4–di^4)
= 0.05 x 2,169,375
= 106,489 cm^4

Area of prestress
A prestressed = @pi/4 (do^2 – di^2)
= 0.79 x 975.00
= 765.76 cm^2

Beta = $\left(\frac{kh.do}{4.E.I}\right)^{0.25}$
kho = 1/30 x alpa x Eo
Alpha = 0.20 from table 3.5
Eo = 28 x N
= 28.00 x 10.00
= 280 kg/cm3
E.I = 343,327 x 106,489 = 3.66E+10 kg.cm2
4.E.I = 4 x 3.66E+10 = 1.46E+11 kg.cm2

kho = 1/30 x Alpa x Eo
= 0.03 x 1 x 280
= 9.33 kg/cm3

kh = kho x {(Beta h)/30}^–0.75 (1)--------equition

Beta h = Bh
Beta = B

Bh = @sqrt(do / B)

$\frac{do}{B} = \frac{40.00}{0.00588039} = 6,802.27$ ---> B find by trial

Bh = 82.48

$\frac{Bh}{30} = \frac{82.48}{30.00} = 2.75$

(Bh/30)^–0.75 = 0.47

kh = 9.33 x 0.47

= 4.3715

$B = \left(\frac{kh \times do}{4.EI}\right)^{0.25}$ (2)--------equition

$kh = \frac{Beta^4 \times 4.EI}{do}$

$kh = \frac{1.20E-09}{40.00} \times 1.46E+11$

------ (1) = ------ (2)

4.3715	=	4.3716 kg/cm3

By trial value of " kh " left side = right side
kh = 4.3715 kg/cm3
= 4,371.57 tom/m3
B = 0.00588 cm–1
B = 0.588039 m–1
cha kh x do = 4.3716 x 40.00
= 174.86

Allowance Horizontal Force
Normal Condition

$Han = \frac{kh \times do}{B} \times delta$

$= \frac{174.86}{0.01} \times 1.00$

= 29,736.57 kg

= 29.737 ton

Project : Medan Flood Control	Japan International Cooperation Agency (JICA)	Calculation sheet	
Channel : Medan Flood Way		Date	
Structure : Br – F8		Nos of sheet	
Station : DU –19 + 00		Prepared by	

III.2.1 Charateristic Value of Pile
III.2.1.2 Earthquake Condition

Beta = charateristic value of pile
kh = coeficient of horizontal subgrade reaction (kr/cm^3)
EI = flexural rigidity of pile
do = outer diameter of pile (cm)
Eo = modulus of deformation of the ground ontained from table

do	=	40.00	cm	
t	=	7.500	cm	
do^2	=	1,600	cm^2	
di	=	(do–2.t)		
	=	40 –	15	
	=	25	cm	
di^2	=	625	cm^2	
do^2–di^2	=	1,600 –	625	
	=	975	cm	
do^4	=	2,560,000	cm4	
di^4	=	390,625	cm4	
do^4– di^4	=	2,560,000 –	390,625	
	=	2,169,375	cm4	

Modulus elasticity

Modulus elasticity of concrete
Temporary load K – 400
Ec = 514,991 kg/cm2
Modulus elasticity of steel
Es = 1,897,200 kg/cm2

Inertia of pile

Inersia K–400 = @pi/64(do^4–di^4)
= 0.05 x 2,169,375
= 106,489 cm^4

Area of prestress

A prestressed = @pi/4 (do^2 – di^2)
= 0.79 x 975.00
= 765.76 cm^2

$$Beta = \left(\frac{kh.do}{4.E.I}\right)^{0.25}$$

kho = 1/30 x alpa x Eo
Alpha = 0.20 from table 3.5
Eo = 28 x N
= 28.00 x 10.00
= 280 kg/cm3
E.I = 514,991 x 106,489 = 5.48E+10 kg.cm2
4.E.I = 4 x 5.48E+10 = 2.19E+11 kg.cm2
kho = 1/30 x Alpa x Eo
= 0.03 x 1 x 280
= 9.33 kg/cm3

$$kh = kho \times \{(Beta\ h)/30\}^{-0.75} \quad (1)\text{--------equition}$$

Beta h = Bh
Beta = B

Bh = @sqrt(do / B)

charc–q

$$\frac{do}{B} = \frac{40.00}{0.00525865} = 7,606.51$$ ---> B find by trial

Bh = 87.22

$$(Bh / 30) = \frac{87.22}{30.00} = 2.91$$

(Bh/30)^–0.7 = 0.45

kh = 9.33 x 0.45
= 4.1921

$$B = \left(\frac{kh \times do}{4.EI}\right)^{0.25} \quad (2)\text{--------equition}$$

$$kh = \frac{Beta^4 \times 4.EI}{do}$$

$$kh = \frac{7.65E-10}{40.00} \times 2.19E+11$$

------ (1) = ------ (2)

4.1921 = 4.1937 kg/cm3

By trial value of " kh " left side = right side

kh = 4.1937 kg/cm3
= 4,193.74 tom/m3
B = 0.00526 cm–1
B = 0.525865 m–1
kh x do = 4.1937 x 40.00
= 167.75

Allowance Horizontal Force

Normal Condition

$$Han = \frac{kh \times do}{B} \times delta$$

$$= \frac{167.75}{0.01} \times 1.00$$

= 31,899.73 kg

= 31.900 ton

charc–q

Project : Medan Flood Control	Japan International Cooperation Agency (JICA)	Calculation sheet
Channel : Medan Flood Way		Date
Structure: Br – F 8		Nos of sheet
Station : DU –19 + 00		Prepared by

III.2.1 Axial bearing load allowance for a pile

a. by soil

do = outer diameter of a pile (m)
di = inner diameter of a pile (m)

do = 0.40 m
t = 0.075 m
di = (do – (2 x t) m
= 0.40 – 0.150
= 0.25 m
do^2 = 0.1600 m2
di^2 = 0.0625 m2
do^2–di^2 = 0.1600 – 0.06
= 0.0975 m2
A prestressed = area of a pile (m2)
= 0.25 x 3.14 x(do^2 – di^2)
= 0.25 x 3.14 x 0.0975
= 0.0766 m2

Hard soil elv.	=	20.151	m
Top deck elevation	=	36.925	m
Depth of Pier	=	11.200	m
Base footing elv.	=	25.725	m
Depth of pile	=	25.725 – 20.151	
	=	5.57	m
Length of pile = Lp say	=	7.00	m

Lp = 7.00 m
ro = 0.20 m
U = 2.00 x @Pi x ro
= 2.00 x 3.14 x 0.20
= 1.26 m

As = total circumferential surface area of the pile (m2)
= U x Lp
= 1.26 x 7.00
= 8.80 m2

N1 = 50.00
N = 40.00

N – value of embedded

N–value top	bot.	Elv. top	Elv. bot.	avrg depth	tot depth	avrg N–value	tot. N–value	Kind of soils	soil friction (t/m2)	lixfi
6.00	10.00	25.725	25.151	0.57	0.57	8.00	4.59	do	6.80	3.90
10.00	14.00	25.151	24.151	1.00	1.57	12.00	12.00	do	6.80	6.80
14.00	19.00	24.151	23.151	1.00	2.57	16.50	16.50	do	6.80	6.80
19.00	41.00	23.151	22.151	1.00	3.57	30.00	30.00	do	6.80	6.80
41.00	43.00	22.151	21.151	1.00	4.57	42.00	42.00	silt	3.30	3.30
43.00	43.00	21.151	20.151	1.00	5.57	43.00	43.00	do	3.30	3.30
43.00	43.00	20.151	19.151	1.00	6.57	43.00	43.00	do	3.30	3.30
			sum	6.57		194.50			37.10	34.20

Average N–val = 194.50 : 6.57 = 29.59

Material is fine sand

$$N = \frac{N1 + N2'}{2}$$

N2' = Mean N–value in the range from the tip of the pile to 4 x D
N2' =(43.00 + 43.00)/2
= 43.00

$$N = \frac{40.00 + 43.00}{2}$$

= 41.50 < 40
= 40

Ru = Ultimate bearing capacity of the pile
li = statum thickness with the skin friction power taken into account (m)
fi = maximum unit area skin friction power of statum with the skin friction power taken into account (t/m2)

4.D	=	4.00 x	0.40	=	1.60	m
l	=	0.50 x	1.60	=	0.80	m
l/D	=	0.80 :	0.40	=	2.00	
qd/N	=	8.00				
qd	=	8.00 x	N			
	=	8.00 x	40.00			
	=	320.00 ton/m2				
A	=	0.25.@pi.d^2				
qd.A	=	320 x	0.1257			
	=	40.21				
U	=	2 x @pi x ro				
	=	2.00 x	3.14 x	0.20		
	=	1.26 m				
Ru	=	qd.A + U.(total li.fi)				
	=	40.21 +	1.26 x	34.20		
	=	83.193 ton				

Length of pile filled by concrete = Lc
Lc = 2.33 m
Y soil = 2.00 t/m3
Ws = Effective weight of soil which replace by pile
= 0.25 @pi do^2 Lp Ysoil
= 0.25 x 3.14 x 0.16 x 7.00 x 2.00
= 1.76 ton

W = Effective weight of concrete which filled in the pile
= 0.25 @pi di^2 Lc Y concrete
= 0.25 x 3.14 x 0.06 x 2.33 x 2.50
= 0.29 ton

Normal condition,
Force bearing capacity of a pile in abutment
Sn = 3.00 Permanent load safety factor
Sq = 2.00 Temporary load safety factor

$$Ran = \frac{1}{Sn} x(Ru - Ws) + Ws - W$$

$$= \frac{1.00}{3.00} x(83.19 - 1.76)+ 1.76 - 0.29^{3/4}$$

= 0.33 x(81.43)+ 1.47
= 27.14 + 1.47
= 28.62 ton/nos

b. by material

Rp = area of pile x compressive stress

= 765.76 x 350.00 : 3.00 SF = 3.00

= 89,339.04 kg

= 89.34 ton

R min. = 28.62 ton

Earth quake

$$Raq = \frac{1.00}{2.00} \times (83.19 - 1.76) + 1.76 - 0.29$$

= 0.50 x(81.43)+ 1.47

= 40.72 + 1.47

= 42.19 ton/nos

Case		V ton	H ton	M ton.m	Allowance bearing of pile Vertical	Allowance bearing of pile Horizontal	Nos of pile Vertical	Nos of pile Horizontal
		Normal condition						
case – I	Hwl	148.28	1.08	−31.60	28.62	31.66	5.18	0.04
case – II	Lwl	176.45	1.08	42.17	28.62	31.66	6.17	0.04
		Earthquake condition						
case – III	Hwl	148.28	24.64	−126.37	42.19	32.69	3.51	0.58
case – IV	Lwl	176.45	28.28	43.69	42.19	32.69	4.18	0.67

Project : Medan Flood Control	Japan International Cooperation Agency (JICA)	Calculation sheet	
Channel : Medan Flood Way		Date	
Structure : Br – F 8		Nos of sheet	
Station : DU –19 + 00		Prepared by	

III.2.3 Spring Constante of Prestressed Concrete Pile

III.2.3.1 Normal condition

Ep = Elasticity of precast prestressed pile concrete
h = axial length of pile above the design ground surface
Beta = charateristic value of pile
k = coeficient of horozontal sub grade reaction (kg/cm^2)
IE = flexural rigidity of pile
K1,K2,K3&K = spring constante
Kv = Axial force (axial spring constante)

di = do–2.t
de = do^2–di^2
df = do^4–di^4

do cm	t cm	di cm	do^2 cm2	di^2 cm2	de cm2	do^4 cm4	di^4 cm4	df cm4
40	7.50	25.00	1,600	625	975	2,560,000	390,625	2,169,375

Ip = @pi/64 x (do^4–di^4)

= 0.0491 x 2,169,375

= 106,489 cm^4

Ap = 1/4.@pi.(do^2–di^2)

= 0.25 x 3.14 x 975

= 765.76 cm2

Ep = 343,327 kg/cm2

Lp = 7.00 m

= 700 cm

$$\beta = 0.041 \times \frac{Lp}{do} - 0.27$$

$$= 0.041 \times \frac{700}{40} - 0.27$$

= 0.041 x 17.50 – 0.27

= 0.7175 – 0.27

= 0.4475

Spring constante on axial force = Kv

$$Kv = \beta \times \frac{Ap}{Lp} \times Ep$$

$$= 0.4475 \times \frac{766}{700} \times 343{,}327$$

= 0.4475 x 375,582

= 168,073 kg/cm

= 16,807 ton/m

E.I = 343,327 x 106,489

= 3.656E+10 kg.cm2

4.EI	=	4 x 3.656E+10	
	=	1.462E+11 kg.cm2	
	=	1.462E+11 x 1.00E-07	
	=	14,624 t.m2	
2.EI	=	7,312 t.m2	
Beta	=	0.588039 m-1	
Beta^2	=	0.34579 m-2	
Beta^3	=	0.2033 m-3	
K1	=	4.EI.Beta^3	
	=	14,624 x 0.2033	
	=	2,974 ton/m	
K2=K3	=	2.EI.Beta^2	
	=	7,312 x 0.3458	
	=	2,526 ton/rad	
K4	=	2.EI.Beta	
	=	7,312 x 0.5880	
	=	4,300 ton.m/rad	

kc-n

Project : Medan Flood Control Channel : Medan Flood Way Structure : Br - F 8 Station : DU -19 + 00	Japan International Cooperation Agency (JICA)	Calculation sheet Date Nos of sheet Prepared by

III.2.3.2 Earthquake condition

Ep = Elasticity of precast prestressed pile concrete
h = axial length of pile above the design ground surface
Beta = charateristic value of pile
k = coeficient of horozontal sub grade reaction (kg/cm^2)
IE = flexural rigidity of pile
K1,K2,K3&K = spring constante
Kv = Axial force (axial spring constante)

di = do-2.t
de = do^2-di^2
df = do^4-di^4

do cm	t cm	di cm	do^2 cm2	di^2 cm2	de cm2	do^4 cm4	di^4 cm4	df cm4
40	7.50	25.00	1,600	625	975	2,560,000	390,625	2,169,375

Ip = @pi/64 x (do^4-di^4)
= 0.0491 x 2,169,375
= 106,489 cm^4

Ap = 1/4.@pi.(do^2-di^2)
= 0.25 x 3.14 x 975
= 765.76 cm2

Ep = 514,991 kg/cm2
Lp = 7.00 m
= 700 cm

$$a = 0.041 \times \frac{Lp}{do} - 0.27$$

$$= 0.041 \times \frac{700}{40} - 0.27$$

$$= 0.041 \times 17.50 - 0.27$$

$$= 0.7175 - 0.27$$

$$= 0.4475$$

Spring constante on axial force = Kv

$$Kv = a \times \frac{Ap}{} \times \frac{Ep}{Lp}$$

$$= 0.4475 \times \frac{766}{} \times \frac{343,327}{700}$$

$$= 0.4475 \times 375,582$$

= 168,073 kg/cm
= 16,807 ton/m

kc - q

E.I	=	514,991 x	106,489
	=	5.484E+10 kg.cm2	
4.EI	=	4.00 x	5.484E+10
	=	2.194E+11 kg.cm2	
	=	2.194E+11 x	1.00E-07
	=	21,936 t.m2	
2.EI	=	10,968 t.m2	
Beta	=	0.525865 m-1	
Beta^2	=	0.27653 m-2	
Beta^3	=	0.1454 m-3	
K1	=	4.EI.Beta^3	
	=	21,936 x	0.1454
	=	3,190 ton/m	
K2=K3	=	2.EI.Beta^2	
	=	10,968 x	0.2765
	=	3,033 ton/rad	
K4	=	2.EI.Beta	
	=	10,968 x	0.5259
	=	5,768 ton.m/rad	

kc - q

Project : Medan Flood Control Channel : Medan Flood Way Structure : Br - F 8 Station : DU -19 + 00	Japan International Cooperation Agency (JICA)	Calculation sheet Date Nos of sheet Prepared by

III.2.4 Coefficient deflection of footing

III.2.4.1 Normal Condition

Axx = tot.(K1 x cos^2 ø + Kv x sin ^2 ø)
Axy = tot.(Kv - K1) x sin ø x cos ø)
Ayx = tot.(Kv - K1) x sin ø x cos ø)
Axa = tot.(KV - K1) x Xi x (sin ø x cos ø) - (K2 x cos ø))
Aax = tot.(KV - K1) x Xi x (sin ø x cos ø) - (K2 x cos ø))
Ayy = tot.(KV x cos ^2 ø + (K1 x sin ^2 ø))
Aya = tot.(KV x cos ^2 ø + K1 x sin ^2 ø) x Xi + K2 x sin ø)
Aay = tot.(KV x cos ^2 ø + K1 x sin ^2 ø) x Xi + K2 x sin ø)
Aaa = tot.(KV x cos ^2 ø + K1 x sin ^2 ø) x Xi^2 ^+ (K2 + K3).Xi sin ø + K4)

Right Abutment		Rows		
Nos. of row		(1)	(2)	(3)
side		L/s	C/l	R/s
sign		(-)	0	(+)
angle		< 0	0	> 0
Xi	=	(1.25)	0.00	1.25
n	=	3.00	3.00	3.00
angle degree	=	(5.7100)	0.00	5.7100
sin ø	=	(0.0995)	0.00	0.10
cos ø	=	0.9950	1.0000	0.9950
sin ø x cosø	=	(0.0990)	0.00	0.10
sin ^2 ø	=	0.0099	0.00	0.01
cos ^2 ø	=	0.9901	1.0000	0.9901
Xi^2	=	1.5625	0.0000	1.5625
K1	=	2,974	2,974	2,974
K2	=	2,528	2,528	2,528
K3	=	2,528	2,528	2,528
K4	=	4,300	4,300	4,300
Kv	=	16,807	16,807	16,807
n.K1	=	8,922	8,922	8,922
n.K2	=	7,584	7,584	7,584
n.K3	=	7,584	7,584	7,584
n.K4	=	12,900	12,900	12,900
n.Kv	=	50,421	50,421	50,421
n.(K2 + K3)	=	15,168	15,168	15,168
Xi.(n.(K2 + K3))	=	(18,960)	0	18,960
Xi.(n.(K2 + K3)).sin ø	=	1,886	0	1,886
n.(Kv-K1)	=	41,499	41,499	41,499
n.(Kv-K1).sin ø.cosø	=	(4,108)	0	4,108
n.K1.cos ^2 ø	=	8,834	8,922	8,834
n.Kv.sin ^2 ø	=	499	0	499
n.Kv.cos ^2 ø	=	49,922	50,421	49,922
n.K1.sin ^2 ø	=	88	0	88
n.K1.sin ø.cosø	=	(883)	0	883
n.Kv.sin ø.cosø	=	(4,992)	0	4,992
Xi.(n.K1.sin ø.cos ø)	=	1,104	0	1,104
Xi.(n.Kv.sin ø.cos ø)	=	6,240	0	6,240
n.K2.cos ø	=	7,546	7,584	7,546
n.K2.sin ø	=	(755)	0	755
n.K3.sin ø	=	(755)	0	755
Xi.(n.Kv.cos ^2 ø)	=	(62,402)	0	62,402
Xi.(n.K1.sin ^2 ø)	=	(110)	0	110

cos-disn

Xi^2.(n.Kv.cos ^2 ø)	=	78.003	0	78.003	
Xi^2.(n.K1.sin ^2 ø)	=	138	0	138	
Xi.(n.K2.sin ø)	=	943	0	943	
Xi.(n.K3.sin ø)	=	943	0	943	

Axx = tot.(K1 x cos ^2 ø + Kv x sin ^2 ø)

					Total
n.K1.cos ^2 ø	=	8.834	8.922	8.834	
n.Kv.sin ^2 ø	=	499	0	499	
total		9.333	8.922	9.333	27.588
Axy = tot.(Kv − K1) x sin ø x cos ø)					
n.(Kv−K1).sin ø.cosø	=	(4.108)	0	4.108	
A xy	=	(4.108)	0	4.108	0
A yx	=	(4.108)	0	4.108	0
Axa = tot.(KV − K1) x Xi x (sin ø x cos ø) − (K2 x cos ø))					
Xi.(n.(Kv − K1).sin ø.cc	=	5.135	0	5.135	
− n.K2.cos ø	=	(7.546)	(7.584)	(7.546)	
Axa		(2.411)	(7.584)	(2.411)	(12.406)
Aax	=	(2.411)	(7.584)	(2.411)	(12.406)
Ayy = tot.(KV x cos ^2 ø + (K1 x sin ^2 ø))					
n.Kv.cos ^2 ø	=	49.922	50.421	49.922	
n.K1.sin ^2 ø	=	88	0	88	
Ayy		50.010	50.421	50.010	150.441
Aya = tot.(KV x cos ^2 ø + K1 x sin ^2 ø) x Xi + K2 x sin ø)					
Xi.(n.Kv.cos ^2 ø)	=	(62.402)	0	62.402	
Xi.(n.K1.sin ^2 ø)	=	(110)	0	110	
n.K2.sin ø	=	(755)	0	755	
Aya	=	(63.267)	0	63.267	0
Aay	=	(63.267)	0	63.267	0
Aaa = tot.(KV x cos ^2 ø + K1 x sin ^2 ø) x Xi^2 ^ + (K2+K3) Xi sin ø + K4)					
Xi^2.(n.Kv.cos ^2 ø)	=	78.003	0	78.003	
Xi^2.(n.K1.sin ^2 ø)	=	138	0	138	
n.(K2+K3).Xi.sin ø	=	1.886	0	1.886	
n.K4	=	12.900	12.900	12.900	
Aaa		92.927	12.900	92.927	198.755

cos−disq

Project : Medan Flood Control	Japan International Cooperation Agency (JICA)	Calculation sheet	
Channel : Medan Flood Way		Date	
Structure : Br − F 8		Nos of sheet	
Station : DU −19 + 00		Prepared by	

III.2.4 Coefficient deflection of footing

III.2.4.2 Earthquake condition

Axx = tot.(K1 x cos ^2 ø + Kv x sin ^2 ø)
Axy = tot.(Kv − K1) x sin ø x cos ø)
Ayx = tot.(Kv − K1) x sin ø x cos ø)
Axa = tot.(KV − K1) x Xi x (sin ø x cos ø) − (K2 x cos ø))
Aax = tot.(KV − K1) x Xi x (sin ø x cos ø) − (K2 x cos ø))
Ayy = tot.(KV x cos ^2 ø + (K1 x sin ^2 ø))
Aya = tot.(KV x cos ^2 ø + K1 x sin ^2 ø) x Xi + K2 x sin ø)
Aay = tot.(KV x cos ^2 ø + K1 x sin ^2 ø) x Xi + K2 x sin ø)
Aaa = tot.(KV x cos ^2 ø + K1 x sin ^2 ø) x Xi ^2 ^ + (K2 + K3).Xi sin ø + K4)

Right Abutment		Rows (1) L/s	(2) C/l	(3) R/s
Nos. of row		(1)	(2)	(3)
side		L/s	C/l	R/s
sign		(−)	0	(+)
angle		< 0	0	> 0
Xi	=	(1.25)	0.00	1.25
n	=	3.00	3.00	3.00
angle degree	=	(5.7100)	0.00	5.7100
sin ø	=	(0.0995)	0.00	0.10
cos ø	=	0.9950	1.0000	0.9950
sin ø x cosø	=	(0.0990)	0.00	0.10
sin ^2 ø	=	0.0099	0.00	0.01
cos ^2 ø	=	0.9901	1.0000	0.9901
Xi^2	=	1.5625	0.0000	1.5625
K1	=	3,190	3,190	3,190
K2	=	3,033	3,033	3,033
K3	=	3,033	3,033	3,033
K4	=	5,768	5,768	5,768
Kv	=	16,807	16,807	16,807
n.K1	=	9,570	9,570	9,570
n.K2	=	9,099	9,099	9,099
n.K3	=	9,099	9,099	9,099
n.K4	=	17,304	17,304	17,304
n.Kv	=	50.421	50.421	50.421
n.(K2 + K3)	=	18,198	18,198	18,198
Xi.(n.(K2 + K3))	=	(22,748)	0	22,748
Xi.(n.(K2 + K3)).sin ø	=	2,263	0	2,263
n.(Kv−K1)	=	40,851	40,851	40,851
n.(Kv−K1).sin ø.cosø	=	(4,044)	0	4,044
n.K1.cos ^2 ø	=	9,475	9,570	9,475
n.Kv.sin ^2 ø	=	499	0	499
n.Kv.cos ^2 ø	=	49,922	50,421	49,922
n.K1.sin ^2 ø	=	95	0	95
n.K1.sin ø.cosø	=	(947)	0	947
n.Kv.sin ø.cosø	=	(4,992)	0	4,992
Xi.(n.K1.sin ø.cos ø)	=	1,184	0	1,184
Xi.(n.Kv.sin ø.cos ø)	=	6,240	0	6,240
n.K2.cos ø	=	9,054	9,099	9,054
n.K2.sin ø	=	(905)	0	905
n.K3.sin ø	=	(905)	0	905
Xi.(n.Kv.cos ^2 ø)	=	(62,402)	0	62,402
Xi.(n.K1.sin ^2 ø)	=	(118)	0	118

cos−disq

Xi^2.(n.Kv.cos ^2 ø)	=	78,003	0	78,003	
Xi^2.(n.K1.sin ^2 ø)	=	148	0	148	
Xi.(n.K2.sin ø)	=	1,132	0	1,132	
Xi.(n.K3.sin ø)	=	1,132	0	1,132	

Axx = tot.(K1 x cos ^2 ø + Kv x sin ^2 ø)

					Total
n.K1.cos^2 ø	=	9,475	9,570	9,475	
n.Kv.sin ^2 ø	=	499	0	499	
total		9,974	9,570	9,974	29,519
Axy = tot.(Kv − K1) x sin ø x cos ø)					
n.(Kv−K1).sin ø.cosø	=	(4,044)	0	4,044	
A xy	=	(4,044)	0	4,044	0
A yx	=	(4,044)	0	4,044	0
Axa = tot.(KV − K1) x Xi x (sin ø x cos ø) − (K2 x cos ø))					
Xi.(n.(Kv − K1).sin ø.c	=	5,055	0	5,055	
− n.K2.cos ø	=	(9,054)	(9,099)	(9,054)	
Axa		(3,999)	(9,099)	(3,999)	(17,096)
Aax	=	(3,999)	(9,099)	(3,999)	(17,096)
Ayy = tot.(KV x cos ^2 ø + (K1 x sin ^2 ø))					
n.Kv.cos ^2 ø	=	49,922	50,421	49,922	
n.K1.sin ^2 ø	=	95	0	95	
Ayy		50,017	50,421	50,017	150,454
Aya = tot.(KV x cos ^2 ø + K1 x sin ^2 ø) x Xi + K2 x sin ø)					
Xi.(n.Kv.cos ^2 ø)	=	(62,402)	0	62,402	
Xi.(n.K1.sin ^2 ø)	=	(118)	0	118	
n.K2.sin ø	=	(905)	0	905	
Aya	=	(63,426)	0	63,426	0
Aay	=	(63,426)	0	63,426	0
Aaa = tot.(KV x cos ^2 ø + K1 x sin ^2 ø) x Xi ^2 ^ + (K2+K3) Xi sin ø + K4)					
Xi^2.(n.Kv.cos ^2 ø)	=	78,003	0	78,003	
Xi^2.(n.K1.sin ^2 ø)	=	148	0	148	
n.(K2+K3).Xi.sin ø	=	2,263	0	2,263	
n.K4	=	17,304	17,304	17,304	
Aaa		97,718	17,304	97,718	212,740

4 - 511

cos−disq

Project	: Medan Flood Control	Japan International Cooperation Agency (JICA)
Channel	: Medan Flood Way	
Structure	: Br − F 8	
Station	: DU −19 + 00	

Calculation sheet
Date
Nos of sheet
Prepared by

III.2.5 Displacement of head pile
III.2.5.1 Case−I Normal condition (I-WL)

Axx	dx	+	Axy	dy	+	Axa	dz	= H
Ayx	dx	+	Ayy	dy	+	Aay	dz	= V
Aax	dx	+	Aay	dy	+	Aaa	dz	= M

27,586	dx	+	0	dy	+	(12,406)	dz	= 1.06 H
0	dx	+	150,441	dy	+	0	dz	= 148.28 V
(12,406)	dx	+	0	dy	+	198,755	dz	= (31.80) M

det A

2.759E+04	150441	0
	0	198755
0	0	0
	−12406	198755
−12406	0	150441
	−12406	0

+	27586	x(	150441	x	198755	−	0	x	0)		
	27586	x(	29900900955	−	0	)				=	8.25E+14
−	0	x(	0	x	198755	−	−12406	x	0)		
	0	x(	0	−	0	)				=	0.00E+00
+	−12406	x(	0	x	0	−	−12406	x	150441)		
	−12406	x(	0	−	1866371046	)				=	−2.32E+13
											8.02E+14

1 / det = 1 / 8.02E+14

Kolector

a11	1.50E+05	0.00E+00	+(	1.50E+05	x	1.99E+05	)−(	0.00E+00	x	0.00E+00	)=	C11
	0.00E+00	1.99E+05	+(	2.99E+10			)−(	0.00E+00	)		=	2.99E+10
a12	0.00E+00	0.00E+00	−(	0.00E+00	x	1.99E+05	)−(−1.24E+04	x	0.00E+00	)=	C12	
	−1.24E+04	1.99E+05	−(	0.00E+00			)−(	0.00E+00	)		=	0.00E+00
a13	0.00E+00	1.50E+05	+(	0.00E+00	x	0.00E+00	)−(−1.24E+04	x	1.50E+05	)=	C13	
	−1.24E+04	0.00E+00	+(	0.00E+00			)−(−1.87E+09	)		=	1.87E+09	
a21	0.00E+00	−1.24E+04	−(	0.00E+00	x	1.99E+05	)−(	0.00E+00	x	−1.24E+04	)=	C21
	0.00E+00	1.99E+05	−(	0.00E+00			)−(	0.00E+00	)		=	0.00E+00
a22	2.76E+04	−1.24E+04	+(	2.76E+04	x	1.99E+05	− −1.24E+04	x	−1.24E+04	)=	C22	
	−1.24E+04	1.99E+05	+(	5.48E+09			− 1.54E+08	)		=	5.33E+09	
a23	2.76E+04	0.00E+00	+(	2.76E+04	x	0.00E+00	− −1.24E+04	x	0.00E+00	)=	C23	
	−1.24E+04	0.00E+00	+(	0.00E+00			− 0.00E+00	)		=	0.00E+00	
a31	0.00E+00	−1.24E+04	+(	0.00E+00	x	0.00E+00	− 1.50E+05	x	−1.24E+04	)=	C31	
	1.50E+05	0.00E+00	+(	0.00E+00			− −1.87E+09	)		=	1.87E+09	
a32	2.76E+04	−1.24E+04	−(	2.76E+04	x	0.00E+00	− 0.00E+00	x	−1.24E+04	)=	C32	
	0.00E+00	0.00E+00	−(	0.00E+00			− 0.00E+00	)		=	0.00E+00	
a33	2.76E+04	0.00E+00	+(	2.76E+04	x	1.50E+05	− 0.00E+00	x	0.00E+00	)=	C33	
	0.00E+00	1.50E+05	+(	4.15E+09			− 0.00E+00	)		=	4.15E+09	

C =

2.99E+10	0.00E+00	1.87E+09
0.00E+00	5.33E+09	0.00E+00
1.87E+09	0.00E+00	4.15E+09

Adj C = Ct =

2.99E+10	0.00E+00	1.87E+09
0.00E+00	5.33E+09	0.00E+00
1.87E+09	0.00E+00	4.15E+09

A^−1 = adj A / det A = 1 / det A x

2.99E+10	0.00E+00	1.87E+09
0.00E+00	5.33E+09	0.00E+00
1.87E+09	0.00E+00	4.15E+09

=

1.06E+00	1.87E+09	1.06E+00
1.48E+02	0.00E+00	1.48E+02
−3.16E+01	4.15E+09	−3.16E+01

2.99E+10	x	1.06E+00	+	0.00E+00	x	1.48E+02	+	1.87E+09	x	−3.16E+01	
0.00E+00	x	1.06E+00	+	5.33E+09	x	1.48E+02	+	0.00E+00	x	−3.16E+01	
1.87E+09	x	1.06E+00	+	0.00E+00	x	1.48E+02	+	4.15E+09	x	−3.16E+01	

X = A^−1.b =

1.00E+00 / 8.02E+14	x	3.23E+10	+	0.00E+00	+	−5.90E+10	=			
		0.00E+00	+	7.90E+11	+	0.00E+00				
		2.02E+09	+	0.00E+00	+	−1.31E+11				

X = 1.00E+00 / 8.02E+14 x

−2.67E+10	=	−3.33E−05
7.90E+11		9.86E−04
−1.29E+11		−1.61E−04

X = dx / dy / dz =

dx	(0.00003328)
dy	0.00098564
dz	(0.00016107)

Control

0.00	dx	+	150,441.00	dy	+	0.00	dz	= 148.28
0	x		(0.000033280)		=	0		
150441	x		0.000985356		=	148.28		
0	x		−0.000161072		=	0		
						148.28	=	148.28

def−hl

Project	: Medan Flood Control
Channel	: Medan Flood Way
Structure	: Br – F 8
Station	: DU –19 + 00

Japan International Cooperation Agency (JICA)

Calculation sheet	
Date	
Nos of sheet	
Prepared by	

III.2.5.2 Case – II Normal condition (LWL)

Axx	dx	+	Axy	dy	+	Axz	dz	=	H
Ayx	dx	+	Ayy	dy	+	Ayz	dz	=	V
Azx	dx	+	Azy	dy	+	Azz	dz	=	M

27,588	dx	+	0	dy	+	(12,406)	dz	=	1.08 H
0	dx	+	150,441	dy	+	0	dz	=	178.45 V
(12,406)	dx	+	0	dy	+	198,755	dz	=	42.17 M

det A

2.759E+04	150441	0 =
	0	198755
0	0	0 =
	−12408	198755
−12408	0	150441 =
	−12408	0

+	27588	x(	150441	x	198755	−	0	x	0)		
	27588	x(	29800900955	−	0	)				=	8.25E+14
−	0	x(	0	x	198755	−	−12408	x	0)		
	0	x(	0	−	0	)				=	0.00E+00
+	−12408	x(	0	x	0	−	−12408	x	150441)		
	−12408	x(	0	−	1866371046	)				=	−2.32E+13
											8.02E+14

$$\frac{1}{\det} = \frac{1}{8.02E+14}$$

Kofactor

a11	1.50E+05	0.00E+00	+	1.50E+05	x	1.99E+05	)−(	0.00E+00	x	0.00E+00	)	=	C11
	0.00E+00	1.99E+05	+	2.99E+10			)−(	0.00E+00	)			=	2.99E+10
a12	0.00E+00	0.00E+00	−	0.00E+00	x	1.99E+05	)−(	−1.24E+04	x	0.00E+00	)	=	C12
	−1.24E+04	1.99E+05	−	0.00E+00			)−(	0.00E+00	)			=	0.00E+00
a13	0.00E+00	1.50E+05	+	0.00E+00	x	0.00E+00	)−(	−1.24E+04	x	1.50E+05	)	=	C13
	−1.24E+04	0.00E+00	+	0.00E+00			)−(	−1.87E+09	)			=	1.87E+09
a21	0.00E+00	−1.24E+04	−	0.00E+00	x	1.99E+05	)−(	0.00E+00	x	−1.24E+04	)	=	C21
	0.00E+00	1.99E+05	−	0.00E+00			)−(	0.00E+00	)			=	0.00E+00
a22	2.76E+04	−1.24E+04	+	2.76E+04	x	1.99E+05	−	−1.24E+04	x	−1.24E+04	)	=	C22
	−1.24E+04	1.99E+05	+	5.48E+09			−	1.54E+08	)			=	5.33E+09
a23	2.76E+04	0.00E+00	+	2.76E+04	x	0.00E+00	−	−1.24E+04	x	0.00E+00	)	=	C23
	−1.24E+04	0.00E+00	+	0.00E+00			−	0.00E+00	)			=	0.00E+00
a31	0.00E+00	−1.24E+04	+	0.00E+00	x	0.00E+00	−	1.50E+05	x	−1.24E+04	)	=	C31
	1.50E+05	0.00E+00	+	0.00E+00			−	−1.87E+09	)			=	1.87E+09
a32	2.76E+04	−1.24E+04	−	2.76E+04	x	0.00E+00	−	0.00E+00	x	−1.24E+04	)	=	C32
	0.00E+00	0.00E+00	−	0.00E+00			−	0.00E+00	)			=	0.00E+00
a33	2.76E+04	0.00E+00	+	2.76E+04	x	1.50E+05	−	0.00E+00	x	0.00E+00	)	=	C33
	0.00E+00	1.50E+05	+	4.15E+09			−	0.00E+00	)			=	4.15E+09

C =

2.99E+10	0.00E+00	1.87E+09
0.00E+00	5.33E+09	0.00E+00
1.87E+09	0.00E+00	4.15E+09

Adj C = Ct =

2.99E+10	0.00E+00	1.87E+09
0.00E+00	5.33E+09	0.00E+00
1.87E+09	0.00E+00	4.15E+09

$$A^{-1} = \frac{\text{adj A}}{\det A} = \frac{1}{\det A} \times$$

2.99E+10	0.00E+00	1.08E+00
0.00E+00	5.33E+09	0.00E+00
0.00E+00	4.15E+09	4.22E+01

2.99E+10	x	1.08E+00	+	0.00E+00	x	1.76E+02	+	1.87E+09	x	4.22E+01		
0.00E+00	x	1.08E+00	+	5.33E+09	x	1.76E+02	+	0.00E+00	x	4.22E+01		
1.87E+09	x	1.08E+00	+	0.00E+00	x	1.76E+02	+	4.15E+09	x	4.22E+01		

$$X = A^{-1}.b = \frac{1.00E+00}{8.02E+14} \times$$

3.23E+10	+	0.00E+00	+	7.87E+10								
0.00E+00	+	9.40E+11	+	0.00E+00	=							
2.02E+09	+	0.00E+00	+	1.75E+11								

$$X = \frac{1.00E+00}{8.02E+14} \times$$

1.11E+11	=	1.38E−04
9.40E+11	=	1.17E−03
1.77E+11	=	2.21E−04

$$X = \begin{vmatrix} dx \\ dy \\ dz \end{vmatrix} = \begin{vmatrix} 0.00013844 \\ 0.00117289 \\ 0.00022081 \end{vmatrix}$$

Control

0.00	dx	+	150,441.00	dy	+	0.00	dz = 178.45
0	x		0.0001384441	=	0		
150441	x		0.0011726851	=	178.45		
0	x		0.0002208122	=	0		
					178.45	=	178.45

def – h2

Project	: Medan Flood Control
Channel	: Medan Flood Way
Structure	: Br – F 8
Station	: DU –19 + 00

Japan International Cooperation Agency (JICA)

Calculation sheet	
Date	
Nos of sheet	
Prepared by	

III.2.5.3 Case – III, Earthquake condition (HWL)

Axx	dx	+	Axy	dy	+	Axz	dz	=	H
Ayx	dx	+	Ayy	dy	+	Ayz	dz	=	V
Azx	dx	+	Azy	dy	+	Azz	dz	=	M

29,519	dx	+	0	dy	+	(17,096)	dz	=	24.64 H
0	dx	+	150,454	dy	+	0	dz	=	148.26 V
(17,096)	dx	+	0	dy	+	212,740	dz	=	(126.37) M

det A

2.952E+04	150454	0 =
	0	212740
0	0	0 =
	−17096	212740
−17096	0	150454 =
	−17096	0

+	29519	x(	150454	x	212740	−	0	x	0)		
	29519	x(	32007583960	−	0	)				=	9.45E+14
−	0	x(	0	x	212740	−	−17096	x	0)		
	0	x(	0	−	0	)				=	0.00E+00
+	−17096	x(	0	x	0	−	−17096	x	150454)		
	−17096	x(	0	−	2572181584	)				=	−4.40E+13
											9.01E+14

$$\frac{1}{\det} = \frac{1}{9.01E+14}$$

Kofactor

a11	1.50E+05	0.00E+00	+	1.50E+05	x	2.13E+05	)−(	0.00E+00	x	0.00E+00	)	=	C11
	0.00E+00	2.13E+05	+	3.20E+10			)−(	0.00E+00	)			=	3.20E+10
a12	0.00E+00	0.00E+00	−	0.00E+00	x	2.13E+05	)−(	−1.71E+04	x	0.00E+00	)	=	C12
	−1.71E+04	2.13E+05	−	0.00E+00			)−(	0.00E+00	)			=	0.00E+00
a13	0.00E+00	1.50E+05	+	0.00E+00	x	0.00E+00	)−(	−1.71E+04	x	1.50E+05	)	=	C13
	−1.71E+04	0.00E+00	+	0.00E+00			)−(	−2.57E+09	)			=	2.57E+09
a21	0.00E+00	−1.71E+04	−	0.00E+00	x	2.13E+05	)−(	0.00E+00	x	−1.71E+04	)	=	C21
	0.00E+00	2.13E+05	−	0.00E+00			)−(	0.00E+00	)			=	0.00E+00
a22	2.95E+04	−1.71E+04	+	2.95E+04	x	2.13E+05	−	−1.71E+04	x	−1.71E+04	)	=	C22
	−1.71E+04	2.13E+05	+	8.28E+09			−	2.92E+08	)			=	5.99E+09
a23	2.95E+04	0.00E+00	+	2.95E+04	x	0.00E+00	−	−1.71E+04	x	0.00E+00	)	=	C23
	−1.71E+04	0.00E+00	+	0.00E+00			−	0.00E+00	)			=	0.00E+00
a31	0.00E+00	−1.71E+04	+	0.00E+00	x	0.00E+00	−	1.50E+05	x	−1.71E+04	)	=	C31
	1.50E+05	0.00E+00	+	0.00E+00			−	−2.57E+09	)			=	2.57E+09
a32	2.95E+04	−1.71E+04	−	2.95E+04	x	0.00E+00	−	0.00E+00	x	−1.71E+04	)	=	C32
	0.00E+00	0.00E+00	−	0.00E+00			−	0.00E+00	)			=	0.00E+00
a33	2.95E+04	0.00E+00	+	2.95E+04	x	1.50E+05	−	0.00E+00	x	0.00E+00	)	=	C33
	0.00E+00	1.50E+05	+	4.44E+09			−	0.00E+00	)			=	4.44E+09

C =

3.20E+10	0.00E+00	2.57E+09
0.00E+00	5.99E+09	0.00E+00
2.57E+09	0.00E+00	4.44E+09

Adj C = Ct =

3.20E+10	0.00E+00	2.57E+09
0.00E+00	5.99E+09	0.00E+00
2.57E+09	0.00E+00	4.44E+09

$$A^{-1} = \frac{\text{adj A}}{\det A} = \frac{1}{\det A} \times$$

3.20E+10	0.00E+00	2.46E+01
0.00E+00	5.99E+09	0.00E+00
2.57E+09	0.00E+00	−1.26E+02

3.20E+10	x	2.46E+01	+	0.00E+00	x	1.48E+02	+	2.57E+09	x	−1.26E+02		
0.00E+00	x	2.46E+01	+	5.99E+09	x	1.48E+02	+	0.00E+00	x	−1.26E+02		
2.57E+09	x	2.46E+01	+	0.00E+00	x	1.48E+02	+	4.44E+09	x	−1.26E+02		

$$X = A^{-1}.b = \frac{1.00E+00}{9.01E+14} \times$$

7.89E+11	+	0.00E+00	+	−3.25E+11								
0.00E+00	+	8.88E+11	+	0.00E+00	=							
8.34E+10	+	0.00E+00	+	−5.61E+11								

$$X = \frac{1.00E+00}{9.01E+14} \times$$

4.84E+11	=	5.15E−04
8.88E+11	=	9.86E−04
−4.98E+11	=	−5.53E−04

$$X = \begin{vmatrix} dx \\ dy \\ dz \end{vmatrix} = \begin{vmatrix} 0.00051465 \\ 0.00098555 \\ (0.00055265) \end{vmatrix}$$

Control

0.00	dx	+	150,454.00	dy	+	0.00	dz = 148.26
0	x		0.0005146457	=	0		
150454	x		0.0009855504	=	148.26		
0	x		−0.000552654	=	0		
					148.26	=	148.26

def – h3

Project	: Medan Flood Control	Japan International Cooperation Agency (JICA)	Calculation sheet
Channel	: Medan Flood Way		Date
Structure	: Br – F 8		Nos of sheet
Station	: DU –19 + 00		Prepared by

III.2.5.4 Case – IV Earthquake condition (LWL)

Axx	dx	+	Axy	dy	+	Axz	dz	=	H
Ayx	dx	+	Ayy	dy	+	Ayz	dz	=	V
Azx	dx	+	Azy	dy	+	Azz	dz	=	M

29,519	dx	+	0	dy	+	(17,096)	dz	= 28.26 H
0	dx	+	150,454	dy	+	0	dz	= 176.45 V
(17,096)	dx	+	0	dy	+	212,740	dz	= 43.69 M

det A

2.952E+04		150454		0	=
		0		212740	
0		0		0	=
		−17096		212740	
−17096		0		150454	=
		−17096		0	

+	29519	x(	150454	x	212740	−	0	x	0)	
	29519	x(	32007563960	−	0	)				= 9.45E+14
−	0	x(	0	x	212740	−	−17096	x	0)	
	0	x(	0	−	0	)				= 0.00E+00
+	−17096	x(	0	x	0	−	−17096	x	150454)	
	−17096	x(	0	−	2572161584	)				= −4.40E+13
										9.01E+14

$$\frac{1}{\det} = \frac{1}{9.01E+14}$$

Kofactor

a11	1.50E+05		0.00E+00	+(	1.50E+05	x	2.13E+05	)−(	0.00E+00	x	0.00E+00	)= C11
	0.00E+00		2.13E+05	+(	3.20E+10			)−(	0.00E+00	)		= 3.20E+10
a12	0.00E+00		0.00E+00	−(	0.00E+00	x	2.13E+05	)−(	−1.71E+04	x	0.00E+00	)= C12
	−1.71E+04		2.13E+05	−(	0.00E+00			)−(	0.00E+00	)		= 0.00E+00
a13	0.00E+00		1.50E+05	+(	0.00E+00	x	0.00E+00	)−(	−1.71E+04	x	1.50E+05	)= C13
	−1.71E+04		0.00E+00	+(	0.00E+00			)−(	−2.57E+09	)		= 2.57E+09
a21	0.00E+00		−1.71E+04	−(	0.00E+00	x	2.13E+05	)−(	0.00E+00	x	−1.71E+04	)= C21
	0.00E+00		2.13E+05	−(	0.00E+00			)−(	0.00E+00	)		= 0.00E+00
a22	2.95E+04		−1.71E+04	+(	2.95E+04	x	2.13E+05	−	−1.71E+04	x	−1.71E+04	)= C22
	−1.71E+04		2.13E+05	+(	6.28E+09			−	2.92E+08	)		= 5.99E+09
a23	2.95E+04		0.00E+00	+(	2.95E+04	x	0.00E+00	−	−1.71E+04	x	0.00E+00	)= C23
	−1.71E+04		0.00E+00	+(	0.00E+00			−	0.00E+00	)		= 0.00E+00
a31	0.00E+00		−1.71E+04	+(	0.00E+00	x	0.00E+00	−	1.50E+05	x	−1.71E+04	)= C31
	1.50E+05		0.00E+00	+(	0.00E+00			−	−2.57E+09	)		= 2.57E+09
a32	2.95E+04		−1.71E+04	−(	2.95E+04	x	0.00E+00	−	0.00E+00	x	−1.71E+04	)= C32
	0.00E+00		0.00E+00	−(	0.00E+00			−	0.00E+00	)		= 0.00E+00
a33	2.95E+04		0.00E+00	+(	2.95E+04	x	1.50E+05	−	0.00E+00	x	0.00E+00	)= C33
	0.00E+00		1.50E+05	+(	4.44E+09			−	0.00E+00	)		= 4.44E+09

C =

3.20E+10	0.00E+00	2.57E+09
0.00E+00	5.99E+09	0.00E+00
2.57E+09	0.00E+00	4.44E+09

Adj C = Ct =

3.20E+10	0.00E+00	2.57E+09
0.00E+00	5.99E+09	0.00E+00
2.57E+09	0.00E+00	4.44E+09

$$A^{-1} = \frac{\text{adj A}}{\det A} = \frac{1}{\det A} \times$$

3.20E+10	0.00E+00	2.57E+09
0.00E+00	5.99E+09	0.00E+00
2.57E+09	0.00E+00	4.44E+09

2.83E+01	1.78E+02	4.37E+01
2.83E+01	1.78E+02	4.37E+01
2.83E+01	1.78E+02	4.37E+01

$$X = A^{-1}.b = \frac{1}{9.01E+14} \times$$

8.05E+11	0.00E+00	1.12E+11
0.00E+00	1.08E+12	0.00E+00
7.27E+10	0.00E+00	1.94E+11

$$X = \frac{1.00E+00}{9.01E+14} \times \begin{vmatrix} 1.02E+12 \\ 1.06E+12 \\ 2.67E+11 \end{vmatrix} = \begin{vmatrix} 1.13E-03 \\ 1.17E-03 \\ 2.96E-04 \end{vmatrix}$$

$$X = \begin{vmatrix} dx \\ dy \\ dz \end{vmatrix} = \begin{vmatrix} 0.00112954 \\ 0.00117278 \\ 0.00029614 \end{vmatrix}$$

Control

0.00	dx	+	150,454.00	dy	+	0.00	dz	= 176.45
0	x		0.0011295365		=	0		
150454	x		0.0011727837		=	176.45		
0	x		0.0002961367		=	0		
						176.45	=	176.45

Project	: Medan Flood Control	Japan International Cooperation Agency (JICA)	Calculation sheet
Channel	: Medan Flood Way		Date
Structure	: Br – F 7		Nos of sheet
Station	: DU –19 + 00		Prepared by

III.2.6. Force at each pile head

III.2.6.1 Case – I Normal condition (HWL)

dxi = (dxi.cos e) – (dy + alpa.Xi).sin e)
dyi = (dxi.sin e) + (dy + alpa.Xi)cos e)

		Row of pile (1)	(2)	(3)	Total
	Side	L/s	C/l	R/s	
	sign	(−)	0	(+)	
	degree	< 0	0	> 0	
Xi	m	(1.25)	0.00	1.25	
n=nos pile/rows		3.00	3.00	3.00	
e	degree	(5.71)	0.00	5.71	
cos e	degree	0.995	1.000	0.995	
sin e	degree	(0.099)	0.000	0.099	
K1	t.m	2,974	2,974	2,974	
K2	t.m/rad	2,528	2,528	2,528	
K3	t.m/rad	2,528	2,528	2,528	
K4	t.m	4,300	4,300	4,300	
Kv	t.m	16,807	16,807	16,807	
dx	m	(0.00003328)	(0.00003328)	(0.00003328)	
dy	m	0.00098564	0.00098564	0.00098564	
alpa	rad	(0.00016107)	(0.00016107)	(0.00016107)	
dxi = dx cos e – (dy + alpa.Xi).sin e					
dx.cos e	=	(0.00003)	(0.00003)	(0.00003)	
dy	=	0.00099	0.00099	0.00099	
alpa	=	(0.00016)	(0.00016)	(0.00016)	
Alpa x Xi	=	0.00020	0.00000	(0.00020)	
dy + Alpa x Xi	=	0.00119	0.00099	0.00078	
(dy + alpa.Xi).sin e	=	(0.00012)	0.00000	0.00008	
dxi	=	0.00008	(0.00003)	(0.00011)	
dyi = dx sin e + (dy + alpa.Xi).cos e					
dx.sin e	=	0.0000033	0.0000000	(0.0000033)	
dy	=	0.0009856	0.0009856	0.0009856	
alpa	=	(0.0001611)	(0.0001611)	(0.0001611)	
Alpa x Xi	=	0.0002013	0.0000000	(0.0002013)	
dy + Alpa x Xi	=	0.0011870	0.0009856	0.0007843	
(dy + alpa.Xi).cos e	=	0.0011811	0.0009856	0.0007804	
dyi	=	0.0011844	0.0009856	0.0007771	
P ni=Kv.dyi		19.91	16.57	13.06	
K1.dxi	=	0.25	(0.10)	(0.33)	
K2.alpa	=	(0.41)	(0.41)	(0.41)	
P hi=K1.dxi–K2.alpa	=	0.66	0.31	0.08	
K3.dxi	=	0.21	(0.08)	(0.28)	
K4.alpa	=	(0.69)	(0.69)	(0.69)	
M ti=–K3.dxi+K4.alpa	=	(0.91)	(0.61)	(0.41)	
Mti x n	=	(2.72)	(1.83)	(1.23)	(5.78)
Vi = Pni.cos e – Phi.sin e					
Pni.cos	=	19.81	16.57	13.00	
Phi.sin e	=	(0.07)	0.00	0.01	
Vi	=	19.87	16.57	12.99	
Hi= Pni.sin e + Phi.cos e					
Pni.sin e	=	(2.0)	0.0	1.3	
Phi.cos e	=	0.7	0.3	0.1	
Hi	=	(1.32)	0.31	1.38	
Hi.n	=	(3.97)	0.92	4.13	1.08
Vi.n	=	59.62	49.70	38.96	148.28
Vi.n.X	=	(74.52)	0.00	48.71	(25.82)
Mti.n	=	(2.72)	(1.83)	(1.23)	(5.78)
Mt=Mti.n + Vi.n.X	=	(77.25)	(1.83)	47.47	(31.60)

Total forces at footing of Abutment				Total forces at pile head		
Ho	=	1.08	ton	Hi.n = Ho	1.08	ton
Vo	=	148.28	ton	Vi.n = Vo	148.28	ton
Mo	=	(31.60)	ton	Mt = Mo	(31.60)	ton

mnh-1

Project : Medan Flood Control	Japan International Cooperation Agency (JICA)	Calculation sheet
Channel : Medan Flood Way		Date
Structure : Br – F 8		Nos of sheet
Station : DU –19 + 00		Prepared by

III.2.6.2 Case – II Normal condition (LWL)

dxi = (dxi.cos α) – (dy + alpa.Xi).sin α)
dyi = (dxi.sin α) + (dy + alpa.Xi)cos α)

			Row of pile (1)	(2)	(3)	Total
		Side	L/s	C/l	R/s	
		sign	(–)	0	(+)	
		degree	< 0	0	> 0	
Xi	m		(1.25)	0.00	1.25	
n=nos pile/rows			3.00	3.00	3.00	
α	degree		(5.71)	0.00	5.71	
cos α	degree		0.995	1.000	0.995	
sin α	degree		(0.099)	0.000	0.099	
K1	t.m		2,974	2,974	2,974	
K2	t.m/rad		2,528	2,528	2,528	
K3	t.m/rad		2,528	2,528	2,528	
K4	t.m		4,300	4,300	4,300	
Kv	t.m		16,807	16,807	16,807	
dx	m		0.00013844	0.00013844	0.00013844	
dy	m		0.00117289	0.00117289	0.00117289	
alpa	rad		0.00022081	0.00022081	0.00022081	
dxi = dx cos α – (dy + alpa.Xi).sin α						
dx.cos α	=		0.00014	0.00014	0.00014	
dy	=		0.00117	0.00117	0.00117	
alpa	=		0.00022	0.00022	0.00022	
Alpa x Xi	=		(0.00028)	0.00000	0.00028	
dy + Alpa x Xi	=		0.00090	0.00117	0.00145	
(dy + alpa.Xi).sin α	=		(0.00009)	0.00000	0.00014	
dxi	=		0.00023	0.00014	(0.00001)	
dyi = dx sin α + (dy + alpa.Xi).cos α						
dx.sin α	=		(0.0000138)	0.0000000	0.0000138	
dy	=		0.0011729	0.0011729	0.0011729	
alpa	=		0.0002208	0.0002208	0.0002208	
Alpa x Xi	=		(0.0002760)	0.0000000	0.0002760	
dy + Alpa x Xi	=		0.0008969	0.0011729	0.0014489	
(dy + alpa.Xi).cos α	=		0.0008924	0.0011729	0.0014417	
dyi	=		0.0008787	0.0011729	0.0014555	
P ni=Kv.dyi			14.77	19.71	24.46	
K1.dxi	=		0.68	0.41	(0.02)	
K2.alpa	=		0.56	0.56	0.56	
P hi=K1.dxi–K2.alpa	=		0.12	(0.15)	(0.58)	
K3.dxi	=		0.57	0.35	(0.02)	
K4.alpa	=		0.95	0.95	0.95	
M ti=–K3.dxi+K4.alpa	=		0.38	0.60	0.97	
Mti x n	=		1.13	1.80	2.90	5.82
Vi = Pni.cos α – Phi.sin α						
Pni.cos	=		14.69	19.71	24.34	
Phi.sin α	=		(0.01)	0.00	(0.06)	
Vi	=		14.71	19.71	24.40	
Hi= Pni.sin α + Phi.cos α						
Pni.sin α	=		(1.5)	0.0	2.4	
Phi.cos α	=		0.1	(0.1)	(0.5)	
Hi	=		(1.35)	(0.15)	1.86	
Hi.n	=		(4.06)	(0.44)	5.58	1.08
Vi.n	=		44.12	59.14	73.20	176.45
Vi.n.X	=		(55.15)	0.00	91.49	36.35
Mti.n	=		1.13	1.80	2.90	5.82
Mt=Mti.n + Vi.n.X	=		(54.02)	1.80	94.39	42.17

Total forces at footing of Abutment				Total forces at pile head		
Ho	=	1.08	ton	Hi.n = Ho	1.08	ton
Vo	=	176.45	ton	Vi.n = Vo	176.45	ton
Mo	=	42.17	ton	Mt = Mo	42.17	ton

mnh–2

Project : Medan Flood Control	Japan International Cooperation Agency (JICA)	Calculation sheet
Channel : Medan Flood Way		Date
Structure : Br – F 8		Nos of sheet
Station : DU –19 + 00		Prepared by

III.2.6.3 Case–3 , Earthquake condition (HWL)

dxi = (dxi.cos α) – (dy + alpa.Xi).sin α)
dyi = (dxi.sin α) + (dy + alpa.Xi)cos α)

			Row of pile (1)	(2)	(3)	Total
		Side	L/s	C/l	R/s	
		sign	(–)	0	(+)	
		degree	< 0	0	> 0	
Xi	m		(1.25)	0.00	1.25	
n=nos pile/rows			3.00	3.00	3.00	
α	degree		(5.71)	0.00	5.71	
cos α	degree		0.995	1.000	0.995	
sin α	degree		(0.099)	0.000	0.099	
K1	t.m		3,190	3,190	3,190	
K2	t.m/rad		3,033	3,033	3,033	
K3	t.m/rad		3,033	3,033	3,033	
K4	t.m		5,768	5,768	5,768	
Kv	t.m		16,807	16,807	16,807	
dx	m		0.00051465	0.00051465	0.00051465	
dy	m		0.00098555	0.00098555	0.00098555	
alpa	rad		(0.00055265)	(0.00055265)	(0.00055265)	
dxi = dx cos α – (dy + alpa.Xi).sin α						
dx.cos α	=		0.00051	0 00051	0.00051	
dy	=		0.00099	0.00099	0.00099	
alpa	=		(0.00055)	(0.00055)	(0.00055)	
Alpa x Xi	=		0.00069	0.00000	(0.00069)	
dy + Alpa x Xi	=		0.00168	0.00099	0.00029	
(dy + alpa.Xi).sin α	=		(0.00017)	0.00000	0.00003	
dxi	=		0.00068	0.00051	0.00048	
dyi = dx sin α + (dy + alpa.Xi).cos α						
dx.sin α	=		(0.0000512)	0.0000000	0.0000512	
dy	=		0.0009856	0.0009856	0.0009856	
alpa	=		(0.0005527)	(0.0005527)	(0.0005527)	
Alpa x Xi	=		0.0006908	0.0000000	(0.0006908)	
dy + Alpa x Xi	=		0.0016764	0.0009856	0.0002947	
(dy + alpa.Xi).cos α	=		0.0016680	0.0009856	0.0002933	
dyi	=		0.0016168	0.0009856	0.0003445	
P ni=Kv.dyi			27.17	16.56	5.79	
K1.dxi	=		2.17	1.64	1.54	
K2.alpa	=		(1.68)	(1.68)	(1.68)	
P hi=K1.dxi–K2.alpa	=		3.84	3.32	3.22	
K3.dxi	=		2.06	1.56	1.46	
K4.alpa	=		(3.19)	(3.19)	(3.19)	
M ti=–K3.dxi+K4.alpa	=		(5.25)	(4.75)	(4.65)	
Mti x n	=		(15.74)	(14.25)	(13.96)	(43.94)
Vi = Pni.cos α – Phi.sin α						
Pni.cos	=		27.04	16.56	5.76	
Phi.sin α	=		(0.38)	0.00	0.32	
Vi	=		27.42	16.56	5.44	
Hi= Pni.sin α + Phi.cos α						
Pni.sin α	=		(2.7)	0.0	0.6	
Phi.cos α	=		3.8	3.3	3.2	
Hi	=		1.12	3.32	3.78	
Hi.n	=		3.36	9.95	11.33	24.64
Vi.n	=		82.26	49.69	16.32	148.28
Vi.n.X	=		(102.83)	0.00	20.40	(82.43)
Mti.n	=		(15.74)	(14.25)	(13.96)	(43.94)
Mt=Mti.n + Vi.n.X	=		(118.57)	(14.25)	6.45	(126.37)

Total forces at footing of Abutment				Total forces at pile head		
Ho	=	24.64	ton	Hi.n = Ho	24.64	ton
Vo	=	148.28	ton	Vi.n = Vo	148.28	ton
Mo	=	(126.37)	ton	Mt = Mo	(126.37)	ton

mnh–3

Project : Medan Flood Control Channel : Medan Flood Way Structure : Br – F 8 Station : DU –19 + 00	Japan International Cooperation Agency (JICA)	Calculation sheet Date Nos of sheet Prepared by

III.2.6.4 Case – IV ,Earthquake condition (LWL)

dxi = (dxi.cos e) – (dy + alpa.Xi).sin e)
dyi = (dxi.sin e) + (dy + alpa.Xi)cos e)

			Row of pile (1)	(2)	(3)	Total
		Side	L/s	C/l	R/s	
		sign	(–)	0	(+)	
		degree	< 0	0	> 0	
Xi		m	(1.25)	0.00	1.25	
n =nos pile/rows			3.00	3.00	3.00	
e		degree	(5.71)	0.00	5.71	
cos e		degree	0.995	1.000	0.995	
sin e		degree	(0.099)	0.000	0.099	
K1		t.m	3,190	3,190	3,190	
K2		t.m/rad	3,033	3,033	3,033	
K3		t.m/rad	3,033	3,033	3,033	
K4		t.m	5,768	5,768	5,768	
Kv		t.m	16,807	16,807	16,807	
dx		m	0.00112954	0.00112954	0.00112954	
dy		m	0.00117278	0.00117278	0.00117278	
alpa		rad	0.00029614	0.00029614	0.00029614	
dxi = dx cos e – (dy + alpa.Xi).sin e						
dx.cos e		=	0.00112	0.00113	0.00112	
dy		=	0.00117	0.00117	0.00117	
alpa		=	0.00030	0.00030	0.00030	
Alpa x Xi		=	(0.00037)	0.00000	0.00037	
dy + Alpa x Xi		=	0.00080	0.00117	0.00154	
(dy + alpa.Xi).sin e		=	(0.00008)	0.00000	0.00015	
dxi		=	0.00120	0.00113	0.00097	
dyi = dx sin e + (dy + alpa.Xi).cos e						
dx.sin e		=	(0.0001124)	0.0000000	0.0001124	
dy		=	0.0011728	0.0011728	0.0011728	
alpa		=	0.0002961	0.0002961	0.0002961	
Alpa x Xi		=	(0.0003702)	0.0000000	0.0003702	
dy + Alpa x Xi		=	0.0008026	0.0011728	0.0015430	
(dy + alpa.Xi).cos e		=	0.0007986	0.0011728	0.0015353	
dyi		=	0.0006862	0.0011728	0.0016477	
P ni=Kv.dyi			11.53	19.71	27.69	
K1.dxi		=	3.84	3.60	3.10	
K2.alpa		=	0.90	0.90	0.90	
P hi=K1.dxi–K2.alpa		=	2.94	2.71	2.20	
K3.dxi		=	3.65	3.43	2.94	
K4.alpa		=	1.71	1.71	1.71	
M ti=–K3.dxi+K4.alpa		=	(1.94)	(1.72)	(1.24)	
Mti x n		=	(5.83)	(5.15)	(3.71)	(14.69)
Vi = Pni.cos e – Phi.sin e						
Pni.cos		=	11.48	19.71	27.56	
Phi.sin e		=	(0.29)	0.00	0.22	
Vi		=	11.77	19.71	27.34	
Hi= Pni.sin e + Phi.cos e						
Pni.sin e		=	(1.1)	0.0	2.8	
Phi.cos e		=	2.9	2.7	2.2	
Hi		=	1.78	2.71	4.94	
Hi.n		=	5.34	8.12	14.83	28.28
Vi.n		=	35.31	59.13	82.01	176.45
Vi.n.X		=	(44.13)	0.00	102.51	58.38
Mti.n		=	(5.83)	(5.15)	(3.71)	(14.69)
Mt=Mti.n + Vi.n.X		=	(49.96)	(5.15)	98.81	43.69

Total forces at footing of Abutment				Total forces at pile head		
Ho	=	68.36	ton	Hi.n = Ho	28.28	ton
Vo	=	229.94	ton	Vi.n = Vo	176.45	ton
Mo	=	(134.11)	ton	Mt = Mo	43.69	ton

mnh–4

Project : Medan Flood Control Channel : Percut River Structure : Br. P 7 Station : Pe 167 + 59	Japan International Cooperation Agency (JICA)	Calculation sheet Date Nos of sheet Prepared by

III.2.7 Control stresses on pile
III.2.7.1 Normal Condition
Case – I High Water Level

Depth embedded of pile = 7.00 m

Axial load Vi = 24.400 ton
= 24,400 kg

Moment Mi = 0.970 t.m
= 97,000 kg.cm

diameter do = 40.00 cm
outer radius ro = 20.00 cm

M' = Mx + Vi x ro
= 97,000 + 24,400 x 20.00
= 97,000 + 488,000
= 585,000 kg.cm

excentrisitas e = Mx / Vi

= 97,000 kg.cm / 24,400 kg
= 3.98 cm

concrete covering s' = 2.50 cm

t = 7.50 cm

Inner diameter d i = 40.00 – 15.00
= 25.00
inner radius ri = 12.50 cm

ro^2 = 400.00
ri^2 = 156.25
ro^2–ri^2 = 400.00 – 156.25
ro^2–ri^2 = 243.75 cm2

area of steel bar
As = 8 ø 16 – – Ø 16
8.00 x 2.0106 = 16.08 cm2

As = 16.08 cm2

Ys = Area of bar.Y bar / Area of bar

= 16.08 x 12.50 / 16.08

= 201.06 / 16.08 = 12.50 cm

a = 1,897,200 / 257.495

= 7.37

$$p = \frac{\text{tot.A rea of steel bar}}{@pi.ro\,\hat{}\,2}$$

$$= \frac{16.08}{3.14 \times 400.00}$$

$$= \frac{16.08}{1,256.64}$$

$$p = 0.01280$$

$$n.p = 7.37 \times 0.01280$$

$$= 1.54810$$

$$alpa = \frac{ri}{ro} = \frac{12.50}{20.00} = 0.63$$

$$e = 3.98 \text{ cm}$$

$$\frac{e}{ro} = \frac{3.98}{20.00} = 0.1988$$

$$\frac{e}{ro} = \frac{pi/4 - (5/12 - 1/6.\cos\hat{}2\,pi)\sin pi.\cos pi + (n.@pi.p)/2.(ri/ro)\hat{}2}{\sin pi/3.(2 + \cos\hat{}2\,pi) - pi.\cos pi - n.@pi.p\cos pi}$$

trial value of pi ---->>>>

pi	=	197.3261 degree
pi	=	3.4440 rad.

e = pi/4 − (5/12 − 1/6.cos^2 pi)sin pi.cos pi + (n.@pi.p)/2.(alpa)^2

pi/4 = A	=	3.4440	:	4.00	=	0.86	
n	=	7.37					
alpa	=	0.63 cm					
alpa^2	=	0.39 cm^2					
cos pi	=	(0.954625)					
Sin pi	=	(0.297810)					
Cos^2 pi	=	0.911309					
1/6.cos^2 pi	=	0.166667	x	0.911309	=	0.15188	
(5/12 − 1/6.cos^2 pi)	=	0.416667	−	0.151885	=	0.264782	
Sin pi cos pi	=	(0.297810)	x	(0.954625)	=	0.28	
(5/12 − 1/6.cos^2 pi) x sin pi.cos pi = B	=	0.26478	x	(0.95463)	=		(0.25277)
(n.@pi.p)	=	1.55	x	3.14	=	4.86	
(n.@pi.p)/2	=	4.86	:	2.00	=	2.43	
(n.@pi.p)/2 x (alpa)^2 = C	=	2.43	x	0.39	=		0.95
sum A − B + C	=	0.86	−	(0.25)	+	0.95	= 2.06

ro = sin pi/3.(2 + cos^2 pi) − pi.cos pi − n.@pi.p cos pi

(Sin pi)/3	=	(0.099)					
(2 + cos^2 pi)	=	2.000	+	0.911	=	2.911	
sin e /3 x (2 + cos^2 pi)	=	(0.099)	x	2.911	=		(0.289)
pi.cos pi	=	3.444	x	(0.955)	=		(3.288)
n.@pi.p	=	1.548	x	3.142	=	4.864	
n.@pi.p cos pi	=	4.864	x	(0.955)	=		(4.643)
					=		7.642

$$\frac{e}{ro} = \frac{2.06}{7.64} \qquad pi = 197.33 \text{ rad}$$

$$\frac{e}{ro} = 0.2701 \qquad \frac{e}{ro} = 0.1988$$

$$C = \frac{1 - \cos pi}{2\sin\hat{}3\,pi/3 - pi\cos pi + \sin pi\cos\hat{}2\,pi + pi/4 - \sin pi.\cos pi/4 - \sin\hat{}3.pi.\cos pi/6 \;@pi.np.(alpa\hat{}2/2 - \cos pi)}$$

Cos pi	=	(0.955)					
sin pi	=	(0.298)					
sin^3 pi	=	(0.026)					
sin pi.cos pi	=	(0.298)	x	(0.955)	=	0.284	
Cos^2pi	=	0.911					
1 − cos pi	=	1.000	−	(0.955)	=	1.955	
2.sin^3 pi	=	2.000	x	(0.026)	=	(0.053)	
2.sin^3 pi/3 = A	=	(0.053)	:	3.000	=		(0.018)
pi.cos pi = B	=	3.444	x	(0.955)	=		(3.288)
sin pi.cos^2 pi = C	=	(0.298)	x	0.911	=		(0.271)
pi/4 = D	=	0.861			=		0.861
Cos pi/4	=	(0.955)	:	4.000	=	(0.239)	
sin pi.cos pi/4 = E	=	(0.298)	x	(0.239)	=		0.071
(sin^3 pi.cos pi)	=	(0.026)	x	(0.955)	=	0.025	
(sin^3 pi.cos pi)/6 = F	=	0.025	:	6.000	=		0.004
n.p	=	1.548					
@pi.np	=	3.142	x	1.548	=	4.864	
alpa	=	0.625					
alpa^2	=	0.391					

0.00

alpa^2/2	=	0.391	:	2.000	=	0.195	
alpa^2/2 − cos pi	=	0.195	−	(0.953)	=	1.150	
@pi.np x alpa^2/2	=	4.864	x	0.195	=	0.950	
@pi.np x alpa^2/2 − cos e = G	=	0.950	−	(0.955)			= 1.905
sum = A − B + C + D − E − F + G							= 5.689

$$C = \frac{1 - \cos pi}{2\sin\hat{}3\,pi/3 - pi\cos pi + \sin pi\cos\hat{}2\,pi + pi/4 - \sin pi.\cos pi/4 - \sin\hat{}3.pi.\cos pi/6 \;@pi.np.(alpa\hat{}2/2 - \cos pi)}$$

$$C = \frac{1.954625}{5.689} = 0.34358$$

$$S = C \times \frac{alpa + \cos pi}{1 - \cos pi}$$

$$= 0.344 \times \frac{0.625 + (0.955)}{1.955}$$

$$= 0.344 \times (0.169)$$

$$= (0.058)$$

M'	=	585,000	kg.cm
ro	=	20.000	cm

stres on concrete = fc

$$fc = \frac{M'}{ro\,\hat{}\,3} \times C$$

$$= \frac{585{,}000}{8.000} \times 0.344$$

$$= 73.125 \times 0.344$$

$$= 25.12 \text{ kg/cm2} > 170 \text{ kg/cm2}$$

stres on steel = fs

$$fs = \frac{M'}{ro\,\hat{}\,3} \times S \times n$$

$$= \frac{585{,}000}{8.000} \times (0.058) \times 7 \text{ kg/cm2}$$

$$= 73.125 \times (0.058) \times 7 \text{ kg/cm2}$$

$$= (31) \text{kg/cm2}$$

teg-n

Project : Medan Flood Control Channel : Percut River Structure : Br. P 7 Station : Pe 167 + 59	Japan International Cooperation Agency (JICA)	Calculation sheet Date Nos of sheet Prepared by

III.2.7.2 Earthquake Condition
Case – I High Water Level

Depth embedded of pile = 7.00 m

Axial load Vi = 27.420 ton
= 27,420 kg

Moment Mi = 5.250 t.m
= 525,000 kg.cm

diameter do = 40.00 cm
outer radius ro = 20.00 cm

M' = Mx + Vi x ro
= 525,000 + 27,420 x 20.00
= 525,000 + 548,400
= 1,073,400 kg.cm

excentrisitas $e = \frac{Mx}{Vi}$

$= \frac{525,000 \text{ kg.cm}}{27,420 \text{ kg}}$

= 19.15 cm

concrete covering a' = 2.50 cm

t = 7.50 cm

Inner diameter di = 40.00 – 15.00
= 25.00
inner radius ri = 12.50 cm

ro^2 = 400.00
ri^2 = 156.25
ro^2–ri^2 = 400.00 – 156.25
ro^2–ri^2 = 243.75 cm2

area of steel bar
As = 8 ø 16 --Ø 16
8.00 x 2.0106 = 16.08 cm2

As = 16.08 cm2

Ys = Area of bar.Y bar / Area of bar

$= \frac{16.08 \times 12.50}{16.08}$

$= \frac{201.06}{16.08} = 12.50$ cm

$n = \frac{1,897,200}{257,495}$

= 7.37

$p = \frac{\text{tot.A rea of steel bar}}{@pi.ro^2}$

$= \frac{16.08}{3.14 \times 400.00}$

$= \frac{16.08}{1,256.64}$

p = 0.01280

a.p = 7.37 x 0.01280

= 1.54810

$alpa = \frac{ri}{ro} = \frac{12.50}{20.00} = 0.63$

e = 19.15 cm

$\frac{e}{ro} = \frac{19.15}{20.00} = 0.9573$

$\frac{e}{ro} = \frac{pi/4 - (5/12 - 1/6.\cos^2 pi)\sin pi.\cos pi + (a.@pi.p)/2.(ri/ro)^2}{\sin pi/3.(2 + \cos^2 pi) - pi.\cos pi - a.@pi.p \cos pi}$

trial value of pi --->>>> pi = 97.3261 degree
pi = 1.6987 rad.

e = pi/4 – (5/12 – 1/6.cos^2 pi)sin pi.cos pi + (n.@pi.p)/2.(alpa) ^2

pi/4 = A	=	1.6987	:	4.00	=	0.42
n	=	7.37				
alpa	=	0.63 cm				
alpa^2	=	0.39 cm^2				
cos pi	=	(0.127517)				
Sin pi	=	0.991836				
Cos^2 pi	=	0.016260				
1/6.cos^2 pi	=	0.166667 x	0.016260	=	0.00271	
(5/12 – 1/6.cos^2 pi)	=	0.416667 –	0.002710	=	0.413957	
Sin pi cos pi	=	0.991836 x	(0.127517)	=	(0.13)	
(5/12 – 1/6.cos^2 pi) x sin pi.cos pi = B	=	0.41396 x	(0.12752)			= (0.05279)
(n.@pi.p)	=	1.55 x	3.14	=	4.86	
(n.@pi.p)/2	=	4.86 :	2.00	=	2.43	
(n.@pi.p)/2 x (alpa)^2 = C	=	2.43 x	0.39			= 0.95
sum A – B + C	=	0.42 –	(0.05) +		0.95	= 1.43

ro = sin pi/3.(2 + cos^2 pi)–pi.cos pi – a.@pi.p cos pi

(Sin pi)/3	=	0.331				
(2 + cos^2 pi)	=	2.000 +	0.016	=	2.016	
sin e /3 x (2 + cos^2 pi)	=	0.331 x	2.016			= 0.667
pi.cos pi	=	1.699 x	(0.128)			= (0.217)
a.@pi.p	=	1.548 x	3.142	=	4.864	
a.@pi.p cos pi	=	4.864 x	(0.128)			= (0.620)
						= 1.503

$\frac{e}{ro} = \frac{1.43}{1.50}$ pi = 97.33 rad

$\frac{e}{ro} = 0.9494$ $\frac{e}{ro} = 0.9573$

$$C = \frac{1 - \cos pi}{2 \sin^3 pi/3 - pi \cos pi + \sin pi \cos^2 pi + pi/4 - \sin pi.\cos pi/4 - \sin^3 3.pi.\cos pi/6 \ @pi.np.(alpa^2/2 - \cos pi)}$$

Cos pi	=	(0.128)					
sin pi	=	0.992					
sin^3 pi	=	0.976					
sin pi.cos pi	=	0.992	x	(0.128)	=	(0.126)	
Cos ^ 2pi	=	0.016					
1 − cos pi	=	1.000	−	(0.128)	=	1.128	
2.sin^3 pi	=	2.000	x	0.976	=	1.951	
2.sin^3 pi/3 = A	=	1.951	:	3.000		=	0.650
pi.cos pi = B	=	1.699	x	(0.128)		=	(0.217)
sin pi.cos^2 pi = C	=	0.992	x	0.016		=	0.016
pi/4 = D	=	0.425				=	0.425
Cos pi/4	=	(0.128)	:	4.000	=	(0.032)	
sin pi.cos pi/4 = E	=	0.992	x	(0.032)		=	(0.032)
(sin^3 pi.cos pi)	=	0.976	x	(0.128)	=	(0.124)	
(sin^3 pi.cos pi)/6 = F	=	(0.124)	:	6.000		=	(0.021)
a.p	=	1.548					
@pi.np	=	3.142	x	1.548	=	4.864	
alpa	=	0.625					
alpa^2	=	0.391					
0.00							
alpa^2/2	=	0.391	:	2.000	=	0.195	
alpa^2/2−cos pi	=	0.195	−	(0.128)	=	0.323	
@pi.np x alpa^2/2	=	4.864	x	0.195	=	0.950	
@pi.np x alpa^2/2−cos a = G	=	0.950	−	(0.128)		=	1.077
sum = A − B + C + D − E − F + G						=	2.438

$$C = \frac{1 - \cos pi}{2 \sin^3 pi/3 - pi \cos pi + \sin pi \cos^2 pi + pi/4 - \sin pi.\cos pi/4 - \sin^3 3.pi.\cos pi/6 \ @pi.np.(alpa^2/2 - \cos pi)}$$

$$C = \frac{1.127517}{2.438} = 0.46254$$

$$S = C \times \frac{alpa + \cos pi}{1 - \cos pi} = 0.463 \times \frac{0.625 + (0.128)}{1.128} = 0.463 \times 0.441 = 0.204$$

M' = 1,073,400 kg.cm

ro = 20.000 cm

stres on concrete = fc

$$fc = \frac{M'}{ro^3} \times C = \frac{1{,}073{,}400}{8{,}000} \times 0.463 = 134.175 \times 0.463 = 62.06 \text{ kg/cm2} > 170 \text{ kg/cm2}$$

stres on steel = fs

$$fs = \frac{M'}{ro^3} \times S \times n = \frac{1{,}073{,}400}{8{,}000} \times 0.204 \times 7 \text{ kg/cm2} = 134.175 \times 0.204 \times 7 \text{ kg/cm2} = 202 \text{ kg/cm2}$$

teg−q

4 - 518

Project : Medan Flood Control Channel : Medan Flood Way Structure : Br − F 8 Station : DU −19 + 00	Japan International Cooperation Agency (JICA)	Calculation sheet Date Nos of sheet Prepared by

III.2.8 Combined load at Pier section

III.2.8.1 Case − 1 Normal Condition (HWL)

= width of footing = 3.80 m

Total weight

total load			
	L/s span =	16.00 m	
Description	Dead load	Pedestrian load	total ton
Total weight	30.94	13.00	43.94
Reaction to pier	15.47	6.50	21.97
Load per m width	4.07	1.71	5.78
	R/s span =	31.00 m	
Total weight	70.71	30.00	100.71
Reaction to pier	35.36	15.00	50.36
Load per m width	9.30	3.95	13.25
Total load to pier	13.38	5.66	19.03

Earthquake coefficient = 0.15

Breaking forces L/s = 0.05 x 1.7105 = 0.085 ton

Breaking forces R/s = 0.05 x 5.6578 = 0.282 ton

Section 1 − 1

H3	=	0.50 m	H7	=	0.50 m	Ywet	=	1.85	t/m3
W3	=	0.60 m	W7	=	0.30 m	Ysat	=	2.00	t/m3
Yconcre	=	2.40 t/m3				Yw	=	1.00	t/m3
Pq.r	=	0.61 ton							

Load		Description Yo	x	H	x	W	=	Weight	Vo	Ho	Xo	Yo	M
		m		m		t/m3		ton	ton	ton	m	m	t.m
C3	=	2.40	x	0.50	x	0.60	=	0.720	0.720		0.300		0.216
C7	=	2.40	x	0.50	x	0.30	=	0.360	0.360		0.100		0.036
Pq	=						=	0.611		0.611			
R.vr	=						=	5.782	5.782		0.300		1.734
sum									6.862	0.611			1.986

Section 2 − 2

H1	=	0.25 m	W1	=	0.40 m	H4	=	0.50 m	W4	=	1.000	m	
H2	=	1.20 m	W2	=	0.60 m	H6	=	0.50 m	W6	=	0.300	m	
H3	=	0.50 m	W3	=	0.60 m	H7	=	0.50 m	W7	=	0.300	m	
Rv.l	=	5.78 ton	Rv.r	=	13.25 ton	H2+H6	=	1.70 m	H3+H7	=	1.000	m	
Pq.l	=	0.61 ton	Pq.r	=	1.40 ton								

Load		Description Y	x	H	x	W	=	Weight	Vo	Ho	Xo	Yo	Mx=Vo.Xo
		m		m		t/m3		ton	ton	ton	m	m	t.m
C1	=	2.40	x	0.25	x	0.40	=	0.240	0.240				
C2	=	2.40	x	1.20	x	0.60	=	1.728	1.728				
C3	=	2.40	x	0.50	x	0.60	=	0.720	0.720				
C4	=	2.40	x	0.50	x	1.00	=	1.200	1.200				
C6	= 0.50 x	2.40	x	0.50	x	0.30	=	0.180	0.180				
C7	= 0.50 x	2.40	x	0.50	x	0.30	=	0.180	0.180				
Pq.l							=	0.611		0.611		1.700	1.038
Pq.r							=	1.396		1.396		1.000	1.396
Rv.l							=	5.782	5.782				
Rv.r							=	13.251	13.251				
Breking forces L/s							=	0.086		0.086		1.700	0.145
Breking forces R/s							=	0.283		0.283		1.000	0.283
sum									23.281	2.375			2.862

mqh−1

Section 3 – 3

H1	=	0.25	m	W1	=	0.40	m	H6	=	0.50	m
H2	=	1.20	m	W2	=	0.60	m	H7	=	0.50	m
H3	=	0.50	m	W3	=	0.60	m	H8	=	7.50	m
H4	=	7.50	m	W4	=	1.00	m	H9	=	7.50	m
Pq.l	=	0.61	ton								
Pq.r	=	1.40	ton								

W6	=	0.300	m
W7	=	0.300	m
W8	=	0.200	m
W9	=	0.200	m
H2+H6+H4	=	9.200	m
H3+H7+H4	=	8.500	m

Load	Description Y	x	H	x	W	=	Weight	Vo	Ho	Xo	Yo	M
	m		m		t/m3		ton	ton	ton	m	m	t.m
C1 =			2.40	x	0.25	x 0.40 =	0.240	0.240				
C2 =			2.40	x	1.20	x 0.60 =	1.728	1.728				
C3 =			2.40	x	0.50	x 0.60 =	0.720	0.720				
C4 =			2.40	x	0.50	x 1.00 =	1.200	1.200				
C8 =	0.50	x	2.40	x	0.50	x 0.30 =	0.180	0.180				
C9 =	0.50	x	2.40	x	0.50	x 0.30 =	0.180	0.180				
Pq.l						=	0.611		0.611		9.200	5.616
Pq.r						=	1.396		1.396		8.500	11.863
Rv.l						=	5.782	5.782				
Rv.r						=	13.251	13.251				
Breking forces L/s						=	0.086		0.086		9.200	0.787
Breking forces R/s						=	0.283		0.283		8.500	2.405
sum								23.261	2.375			20.672

Section 4 – 4

H9	=	0.30	m	W1	=	1.20 m
H5	=	1.00	m	W2	=	1.20 m
H wet	=	0.00	m			
H sat	=	1.564	m			

Load	Description Y	x	H	x	W	=	Weight	Vo	Ho	Xo	Yo	M = Vo.Xo
	m		m		t/m3		ton	ton	ton	m	m	
45r1 =	0.50	x	2.40	x	0.30	x 1.20 =	0.432	0.432		0.400		0.173
45r2 =			2.40	x	1.00	x 1.20 =	2.880	2.880		0.600		1.728
Esat =			2.00	x	1.56	x 2.00 =	6.256	6.256		1.000		6.256
Rp-3						=	(12.990)	(12.990)		0.575		(7.469)
sum								(3.422)				0.688

Section 5 – 5

H8	=	0.30	m	W8	=	1.20 m
H3	=	1.00	m	W3	=	1.20 m
H wet	=	0.00	m			
H sat	=	1.564	m			

Load	Description Y	x	H	x	W	=	Weight	Vo	Ho	Xo	Yo	M = Vo.Xo
	m		m		t/m3		ton	ton	ton	m	m	
C3.ru =	0.50	x	2.40	x	0.30	x 1.20 =	0.432	0.432		0.400		0.173
C3.rd =			2.40	x	1.00	x 1.20 =	2.880	2.880		0.600		1.728
Esat =			2.00	x	1.56	x 2.00 =	6.256	6.256		1.000		6.256
Rp-1						=	(19.870)	(19.870)		0.575		(11.425)
sum								(10.302)				(3.268)

Section 6 – 6

H1	=	0.50	m	W1	=	1.50	m	
H2	=	0.50	m	W2	=	1.50	m	
Length	=	2.80	m	Rv tot.	=	0.00	ton	

Load	Description Y	x	H	x	W	x	L	=	Weight	Vo	Ho	Xo	Yo	M = Vo.Xo
	m		m		m		m		ton	ton	ton	m	m	
C3.ld =			2.40	x	1.20	x	1.50	x 1.00 =	4.320	4.320		0.750		3.240
C3.lu =	0.50	x	2.40	x	0.50	x	1.50	x 1.00 =	0.900	0.900		0.500		0.450
Rv								=	0.000	0.000		0.000		0.000
R – service								=	2.500	2.500		0.750		1.875
sum										7.720				5.565

Section 7 – 7

H1	=	1.00	m	W1	=	1.15	m	
H2	=	1.30	m	W2	=	1.15	m	
Back fill depth					=	1.564	m	

Load	Description Y	x	H	x	W	=	Weight	Vo	Ho	Xo	Yo	M = Vo.Xo
	m		m		t/m3		ton	ton	ton	m	m	t.m
C8.u =	0.50	x	2.40	x	0.50	x 1.50 =	0.900	0.900		0.500		0.450
C8.d =			2.40	x	1.30	x 1.50 =	4.680	4.680		0.750		3.510
Back fill =			2.00	x	1.56	x 1.50 =	4.692	4.692		0.750		3.519
Rp row1						=	(19.870)	(19.870)		0.350		(6.954)
sum								(9.598)				0.525

mnh-1

Project : Medan Flood Control	Japan International Cooperation Agency (JICA)	Calculation sheet
Channel : Medan Flood Way		Date
Structure : Br – F 8		Nos of sheet
Station : DU –19 + 00		Prepared by

Combined load at Pier section
Normal condition
III.2.8.2 Case – II Normal condition (LWL)

= width of footing = 3.80 m

Total weight

total load			
L/s span =		16.00 m	
Description	Dead load	Pedestrian load	total ton
Total weight	30.94	13.00	43.94
Reaction to pier	15.47	6.50	21.97
Load per m width	4.07	1.71	5.78
R/s span =		31.00 m	
Total weight	70.71	30.00	100.71
Reaction to pier	35.36	15.00	50.36
Load per m width	9.30	3.95	13.25
Total load to pier	13.38	5.66	19.03

Earthquake coefficient = 0.15
Breaking forces L/s = 0.05 x 1.7105 = 0.085 ton
Breaking forces R/s = 0.05 x 5.6578 = 0.282 ton

Section 1 – 1

H3 = 0.50 m H7 = 0.50 m Ywet = 1.85 t/m3
W3 = 0.60 m W7 = 0.30 m Ysat = 2.00 t/m3
Yconcre = 2.40 t/m3 Yw = 1.00 t/m3
Pq.r = 0.61 ton

Load	Description Y	x	H	x	W	=	Weight	Vo	Ho	Xo	Yo	M
	m		m		t/m3		ton	ton	ton	m	m	t.m
C3 =	2.40	x	0.50	x	0.60	=	0.720	0.720		0.300		0.216
C7 =	2.40	x	0.50	x	0.30	=	0.360	0.360		0.100		0.036
Pq =						=	0.611		0.611			
R.vr =						=	5.782	5.782		0.300		1.734
sum								6.862	0.611			1.986

Section 2 – 2

H1 = 0.25 m W1 = 0.40 m H4 = 0.50 m W4 = 1.000 m
H2 = 1.20 m W2 = 0.60 m H6 = 0.50 m W6 = 0.300 m
H3 = 0.50 m W3 = 0.60 m H7 = 0.50 m W7 = 0.300 m
Rv.l = 5.78 ton Rv.r = 13.25 ton H2+H6 = 1.70 m H3+H7 = 1.000 m
Pq.l = 0.61 ton Pq.r = 1.40 ton

Load	Description Y	x	H	x	W	=	Weight	Vo	Ho	Xo	Yo	Mx=Vo.Xo
	m		m		t/m3		ton	ton	ton	m	m	t.m
C1 =	2.40	x	0.25	x	0.40	=	0.240	0.240				
C2 =	2.40	x	1.20	x	0.60	=	1.728	1.728				
C3 =	2.40	x	0.50	x	0.60	=	0.720	0.720				
C4 =	2.40	x	0.50	x	1.00	=	1.200	1.200				
C6 = 0.50	x 2.40	x	0.50	x	0.30	=	0.180	0.180				
C7 = 0.50	x 2.40	x	0.50	x	0.30	=	0.180	0.180				
Pq.l						=	0.611		0.611		1.700	1.038
Pq.r						=	1.396		1.396		1.000	1.396
Rv.l						=	5.782	5.782				
Rv.r						=	13.251	13.251				
Breking forces L/s						=	0.086		0.086		1.700	0.145
Breking forces R/s						=	0.283		0.283		1.000	0.283
sum								23.281	2.375			2.662

mqh–2

Section 3 – 3

H1 = 0.25 m W1 = 0.40 m H6 = 0.50 m W8 = 0.300 m
H2 = 1.20 m W2 = 0.60 m H7 = 0.50 m W7 = 0.300 m
H3 = 0.50 m W3 = 0.60 m H8 = 7.50 m W8 = 0.200 m
H4 = 7.50 m W4 = 1.00 m H9 = 7.50 m W9 = 0.200 m
Pq.l = 0.61 ton H2+H6+H4 = 9.200 m
Pq.r = 1.40 ton H3+H7+H4 = 8.500 m

Load	Description Y	x	H	x	W	=	Weight	Vo	Ho	Xo	Yo	M
	m		m		t/m3		ton	ton	ton	m	m	t.m
C1 =	2.40	x	0.25	x	0.40	=	0.240	0.240				
C2 =	2.40	x	1.20	x	0.60	=	1.728	1.728				
C3 =	2.40	x	0.50	x	0.60	=	0.720	0.720				
C4 =	2.40	x	0.50	x	1.00	=	1.200	1.200				
C8 = 0.50	x 2.40	x	0.50	x	0.30	=	0.180	0.180				
C9 = 0.50	x 2.40	x	0.50	x	0.30	=	0.180	0.180				
Pq.l						=	0.611		0.611		9.200	5.618
Pq.r						=	1.396		1.396		8.500	11.863
Rv.l						=	5.782	5.782				
Rv.r						=	13.251	13.251				
Breking forces L/s						=	0.086		0.086		9.200	0.787
Breking forces R/s						=	0.283		0.283		8.500	2.405
sum								23.281	2.375			20.672

Section 4 – 4

H9 = 0.30 m W1 = 1.20 m
H5 = 1.00 m W2 = 1.20 m
H wet = 0.00 m
H sat = 1.564 m

Load	Description Y	x	H	x	W	=	Weight	Vo	Ho	Xo	Yo	M = Vo.Xo
	m		m		t/m3		ton	ton	ton	m	m	
45r1 = 0.50	x 2.40	x	0.30	x	1.20	=	0.432	0.432		0.400		0.173
45r2 =	2.40	x	1.00	x	1.20	=	2.880	2.880		0.600		1.728
Esat =	2.00	x	1.56	x	2.00	=	6.256	6.256		1.000		6.256
Rp–3						=	(24.400)	(24.400)		0.575		(14.030)
sum								(14.832)				(5.873)

Section 5 – 5

H8 = 0.30 m W8 = 1.20 m
H3 = 1.00 m W3 = 1.20 m
H wet = 0.00 m
H sat = 1.564 m

Load	Description Y	x	H	x	W	=	Weight	Vo	Ho	Xo	Yo	M = Vo.Xo
	m		m		t/m3		ton	ton	ton	m	m	
C3.ru = 0.50	x 2.40	x	0.30	x	1.20	=	0.432	0.432		0.400		0.173
C3.rd =	2.40	x	1.00	x	1.20	=	2.880	2.880		0.600		1.728
Esat =	2.00	x	1.56	x	2.00	=	6.256	6.256		1.000		6.256
Rp–1						=	(14.710)	(14.710)		0.575		(8.458)
sum								(5.142)				(0.301)

mqh–2

Section 6 – 6

H1 = 0.50 m W1 = 1.50 m
H2 = 0.50 m W2 = 1.50 m
Length = 2.80 m Rv tot. = 0.00 ton

Load	Description Y	x	H	x	W	x	L	=	Weight	Vo	Ho	Xo	Yo	M = Vo.Xo
	m		m		m		m		ton	ton	ton	m	m	
C3.id =	2.40	x	1.20	x	1.50	x	1.00	=	4.320	4.320		0.750		3.240
C3.fu =	0.50	x	2.40	x	0.50	x	1.50	x	1.00	=	0.900	0.900		0.500		0.450
Rv									=	0.000	0.000		0.000		0.000
R – service									=	2.500	2.500		0.750		1.875
sum											7.720				5.565

Section 7 – 7

H1 = 1.00 m W1 = 1.15 m
H2 = 1.30 m W2 = 1.15 m
Back fill depth = 1.564 m

Load	Description Y	x	H	x	W	=	Weight	Vo	Ho	Xo	Yo	M = Vo.Xo
	m		m		t/m3		ton	ton	ton	m	m	t.m
C8.u =	0.50	x	2.40	x	0.50	x	1.50	=	0.900	0.900		0.500		0.450
C6.d =			2.40	x	1.30	x	1.50	=	4.680	4.680		0.750		3.510
Back fill =			2.00	x	1.56	x	1.50	=	4.692	4.692		0.750		3.519
Rp row1								=	(19.870)	(19.870)		0.350		(6.954)
sum										(9.598)				0.525

mqh-2

Project : Medan Flood Control Channel : Medan Flood Way Structure : Br – F 8 Station : DU –19 + 00	Japan International Cooperation Agency (JICA)	Calculation sheet Date Nos of sheet Prepared by

Combined load at Pier section
III.2.8.3 Case – III Earthquake (HWL)

= width of footing = 3.80 m

Total weight

total load	L/s span = 16.00 m		
Description	Dead load	Pedestrian load	total ton
Total weight	30.94	13.00	43.94
Reaction to pier	15.47	6.50	21.97
Load per m width	4.07	1.71	5.78
	R/s span = 31.00 m		
Total weight	70.71	30.00	100.71
Reaction to pier	35.36	15.00	50.36
Load per m width	9.30	3.95	13.25
Total load to pier	13.38	5.66	19.03

Earthquake coefficient = 0.15
Breaking forces L/s = 0.05 x 1.7105 = 0.085 ton
Breaking forces R/s = 0.05 x 5.6578 = 0.282 ton

Section 1 – 1

H3 = 0.50 m H7 = 0.50 m Ywet = 1.85 t/m3
W3 = 0.60 m W7 = 0.30 m Ysat = 2.00 t/m3
Yconcre = 2.40 t/m3 Yw = 1.00 t/m3
Pq.r = 0.61 ton

Load	Description Yc	x	H	x	W	=	Weight	Vo	Ho	Xo	Yo	M
	m		m		t/m3		ton	ton	ton	m	m	t.m
C3 =	2.40	x	0.50	x	0.60	=	0.720	0.720		0.300		0.216
C7 =	2.40	x	0.50	x	0.30	=	0.360	0.360		0.100		0.036
Pq =						=	0.611		0.611			
R.vr =						=	5.782	5.782		0.300		1.734
sum								6.862	0.611			1.986

Section 2 – 2

H1 =	0.25 m	W1 =	0.40 m	H4 =	0.50 m	W4 =	1.000 m				
H2 =	1.20 m	W2 =	0.60 m	H6 =	0.50 m	W6 =	0.300 m				
H3 =	0.50 m	W3 =	0.60 m	H7 =	0.50 m	W7 =	0.300 m				
Rv.l =	5.78 ton	Rv.r =	13.25 ton	H2+H6 =	1.70 m	H3+H7 =	1.000 m				
Pq.l =	0.61 ton	Pq.r =	1.40 ton								

Load	Description Y	x	H	x	W	=	Weight	Vo	Ho	Xo	Yo	Mx=Vo.Xo
	m		m		t/m3		ton	ton	ton	m	m	t.m
C1 =			2.40	x	0.25	x	0.40	=	0.240	0.240				
C2 =			2.40	x	1.20	x	0.60	=	1.728	1.728				
C3 =			2.40	x	0.50	x	0.60	=	0.720	0.720				
C4 =			2.40	x	0.50	x	1.00	=	1.200	1.200				
C6 =	0.50	x	2.40	x	0.50	x	0.30	=	0.180	0.180				
C7 =	0.50	x	2.40	x	0.50	x	0.30	=	0.180	0.180				
Pq.l								=	0.611		0.611		1.700	1.038
Pq.r								=	1.396		1.396		1.000	1.396
Rv.l								=	5.782	5.782				
Rv.r								=	13.251	13.251				
Breking forces L/s								=	0.086		0.086		1.700	0.145
Breking forces R/s								=	0.263		0.263		1.000	0.263
sum										23.281	2.375			2.862

mqh-3

Section 3 – 3

H1	=	0.25	m	W1	=	0.40	m	H6	=	0.50	m
H2	=	1.20	m	W2	=	0.60	m	H7	=	0.50	m
H3	=	0.50	m	W3	=	0.60	m	H8	=	7.50	m
H4	=	7.50	m	W4	=	1.00	m	H9	=	7.50	m
Pq.l	=	0.61	ton								
Pq.r	=	1.40	ton								

| | | | | | | | | | | |

Project : Medan Flood Control Channel : Medan Flood Way Structur : Br – F 8 Station : DU –19 + 00	Japan International Cooperation Agency (JICA)	Calculation sheet Date Nos of sheet Prepared by

Combined load at Pier section
Earthquake condition
III.2.8.4 Case – IV Earthquake Condition (LWL)

= width of footing = 3.80 m

Total weight

total load			
L/s span =	16.00 m		
Description	Dead load	Pedestrian load	total ton
Total weight	30.94	13.00	43.94
Reaction to pier	15.47	6.50	21.97
Load per m width	4.07	1.71	5.78
R/s span =	31.00 m		
Total weight	70.71	30.00	100.71
Reaction to pier	35.36	15.00	50.36
Load per m width	9.30	3.95	13.25
Total load to pier	13.38	5.66	19.03

Earthquake coefficient = 0.15
Breaking forces L/s = 0.05 x 1.7105 = 0.085 ton
Breaking forces R/s = 0.05 x 5.6578 = 0.282 ton

Section 1 – 1

H3 = 0.50 m H7 = 0.50 m Ywet = 1.85 t/m3
W3 = 0.60 m W7 = 0.30 m Ysat = 2.00 t/m3
Yconcre = 2.40 t/m3 Yw = 1.00 t/m3
Pq.r = 0.61 ton

Load	Description Yc x H x W =	Weight	Vo	Ho	Xo	Yo	M
	m x m x t/m3	ton	ton	ton	m	m	t.m
C3 =	2.40 x 0.50 x 0.60 =	0.720	0.720		0.300		0.216
C7 =	2.40 x 0.50 x 0.30 =	0.360	0.360		0.100		0.036
Pq =	=	0.611		0.611			
R.vr =	=	5.782	5.782		0.300		1.734
sum			6.862	0.611			1.986

Section 2 – 2

H1 =	0.25 m	W1 =	0.40 m	H4 =	0.50 m	W4 =	1.000 m		
H2 =	1.20 m	W2 =	0.60 m	H6 =	0.50 m	W6 =	0.300 m		
H3 =	0.50 m	W3 =	0.60 m	H7 =	0.50 m	W7 =	0.300 m		
Rv.l =	5.78 ton	Rv.r =	13.25 ton	H2+H6 =	1.70 m	H3+H7 =	1.000 m		
Pq.l =	0.61 ton	Pq.r =	1.40 ton						

Load	Description Y x H x W =	Weight	Vo	Ho	Xo	Yo	Mx=Vo.Xo
	m x m x t/m3	ton	ton	ton	m	m	t.m
C1 =	2.40 x 0.25 x 0.40 =	0.240	0.240				
C2 =	2.40 x 1.20 x 0.60 =	1.728	1.728				
C3 =	2.40 x 0.50 x 0.60 =	0.720	0.720				
C4 =	2.40 x 0.50 x 1.00 =	1.200	1.200				
C6 = 0.50 x	2.40 x 0.50 x 0.30 =	0.180	0.180				
C7 = 0.50 x	2.40 x 0.50 x 0.30 =	0.180	0.180				
Pq.l	=	0.611		0.611		1.700	1.038
Pq.r	=	1.396		1.396		1.000	1.396
Rv.l	=	5.782	5.782				
Rv.r	=	13.251	13.251				
Breking forces L/s	=	0.086		0.086		1.700	0.145
Breking forces R/s	=	0.283		0.283		1.000	0.283
sum			23.281	2.375			2.862

mqh – 4

Section 3 – 3

H1 =	0.25 m	W1 =	0.40 m	H6 =	0.50 m	W6 =	0.300 m		
H2 =	1.20 m	W2 =	0.60 m	H7 =	0.50 m	W7 =	0.300 m		
H3 =	0.50 m	W3 =	0.60 m	H8 =	7.50 m	W8 =	0.200 m		
H4 =	7.50 m	W4 =	1.00 m	H9 =	7.50 m	W9 =	0.200 m		
Pq.l =	0.61 ton					H2+H6+H4 =	9.200 m		
Pq.r =	1.40 ton					H3+H7+H4 =	8.500 m		

Load	Description Y x H x W =	Weight	Vo	Ho	Xo	Yo	M
	m x m x t/m3	ton	ton	ton	m	m	t.m
C1 =	2.40 x 0.25 x 0.40 =	0.240	0.240				
C2 =	2.40 x 1.20 x 0.60 =	1.728	1.728				
C3 =	2.40 x 0.50 x 0.60 =	0.720	0.720				
C4 =	2.40 x 0.50 x 1.00 =	1.200	1.200				
C8 = 0.50 x	2.40 x 0.50 x 0.30 =	0.180	0.180				
C9 = 0.50 x	2.40 x 0.50 x 0.30 =	0.180	0.180				
Pq.l	=	0.611		0.611		9.200	5.618
Pq.r	=	1.396		1.396		8.500	11.863
Rv.l	=	5.782	5.782				
Rv.r	=	13.251	13.251				
Breking forces L/s	=	0.086		0.086		9.200	0.787
Breking forces R/s	=	0.283		0.283		8.500	2.405
sum			23.281	2.375			20.672

Section 4 – 4

H9 = 0.30 m W1 = 1.20 m
H5 = 1.00 m W2 = 1.20 m
H wet = 0.00 m
H sat = 1.564 m

Load	Description Y x H x W =	Weight	Vo	Ho	Xo	Yo	M = Vo.Xo
	m x m x t/m3	ton	ton	ton	m	m	
45r1 = 0.50 x	2.40 x 0.30 x 1.20 =	0.432	0.432		0.400		0.173
45r2 =	2.40 x 1.00 x 1.20 =	2.880	2.880		0.600		1.728
Esat =	2.00 x 1.56 x 2.00 =	6.256	6.256		1.000		6.256
Rp–3	=	(27.340)	(27.340)		0.575		(15.721)
sum			(17.772)				(7.564)

Section 5 – 5

H8 = 0.30 m W8 = 1.20 m
H3 = 1.00 m W3 = 1.20 m
H wet = 0.00 m
H sat = 1.564 m

Load	Description Y x H x W =	Weight	Vo	Ho	Xo	Yo	M = Vo.Xo
	m x m x t/m3	ton	ton	ton	m	m	
C3.ru = 0.50 x	2.40 x 0.30 x 1.20 =	0.432	0.432		0.400		0.173
C3.rd =	2.40 x 1.00 x 1.20 =	2.880	2.880		0.600		1.728
Esat =	2.00 x 1.56 x 2.00 =	6.256	6.256		1.000		6.256
Rp–1	=	(11.770)	(11.770)		0.575		(6.768)
sum			(2.202)				1.389

mqh – 4

Section 6 – 6

H1 = 0.50 m W1 = 1.50 m
H2 = 0.50 m W2 = 1.50 m
Length = 2.80 m Rv tot. = 0.00 ton

Load	Description	Weight	Vo	Ho	Xo	Yo	M = Vo.Xo
	Y x H x W x L =						
	m m m m	ton	ton	ton	m	m	
C3.id =	2.40 x 1.20 x 1.50 x 1.00 =	4.320	4.320		0.750		3.240
C3.iu =	0.50 x 2.40 x 0.50 x 1.50 x 1.00 =	0.900	0.900		0.500		0.450
Rv	=	0.000	0.000		0.000		0.000
R – service	=	2.500	2.500		0.750		1.875
sum			7.720				5.565

Section 7 – 7

H1 = 1.00 m W1 = 1.15 m
H2 = 1.30 m W2 = 1.15 m
Back fill depth = 1.564 m

Load	Description	Weight	Vo	Ho	Xo	Yo	M = Vo.Xo
	Y x H x W =						
	m m t/m3	ton	ton	ton	m	m	t.m
C8.u =	0.50 x 2.40 x 0.50 x 1.50 =	0.900	0.900		0.500		0.450
C8.d =	2.40 x 1.30 x 1.50 =	4.680	4.680		0.750		3.510
Back fill =	2.00 x 1.56 x 1.50 =	4.692	4.692		0.750		3.519
Rp row1	=	(11.770)	(11.770)		0.350		(4.119)
sum			(1.498)				3.360

Project : Medan Flood Control Channel : Medan Flood Way Structure : Br – Mf 8 Station : Du 19 + 00	Japan International Cooperation Agency (JICA)	Calculation sheet Date Nos of sheet Prepared by

III.2.8.9 Resume forces on Pier Section

Case – I,Normal Condition (HWL)

Case	Forces	Unit	Section 1	2	3	4	5	6	7
Case – I	Moment	t.m	1.986	2.862	20.672	0.688	3.268	5.565	0.525
		kg.cm	198,600	286,200	2,067,200	68,800	326,800	556,500	52,500
	Shear	ton	0.6	2.375	2.376	0.0	0.0	0.0	0.0
		kg	611.0	2,375	2,376.0	0.0	0.0	0.0	0.0
	Normal	ton	6.862	23.281	23.281	3.422	10.302	7.720	9.598
		kg	6,862	23,281	23,281	3,422	10,302	7,720	9,598

Case – II,Normal Condition (LWL)

Case	Forces	Unit	Section 1	2	3	4	5	6	7
Case – II	Moment	t.m	1.986	2.862	20.672	5.873	0.301	5.565	0.525
		kg.cm	198,600	286,200	2,067,200	587,300	30,100	556,500	52,500
	Shear	ton	0.6	2.375	2.375	0.0	0.0	0.0	0.0
		kg	610.0	2,375	2,375.0	0.0	0.0	0.0	0.0
	Normal	ton	6.862	23.281	23.281	14.832	5.142	7.720	9.598
		kg	6,862	23,281	23,281	14,832	5,142	7,720	9,598

Case – III,Earthquake Condition (HWL)

Case	Forces	Unit	Section 1	2	3	4	5	6	7
Case – III	Moment	t.m	1.986	2.862	20.672	5.029	7.610	5.565	2.118
		kg.cm	198,600	286,200	2,067,200	502,900	761,000	556,500	211,800
	Shear	ton	0.611	2.375	2.375	0.0	0.0	0.0	0.0
		kg	611	2,375	2,375	0.0	0.0	0.0	0.0
	Normal	ton	6.862	23.281	23.281	4.128	17.852	7.720	17.148
		kg	6,862	23,281	23,281	4,128	17,852	7,720	17,148

Case – IV,Earthquake Condition (LWL)

Case	Forces	Unit	Section 1	2	3	4	5	6	7
Case – IV	Moment -	t.m	1.986	2.862	20.672	7.564	1.389	5.565	3.360
		kg.cm	198,600	286,200	2,067,200	756,400	138,900	556,500	336,000
	Shear	ton	0.611	2.375	2.375	0.0	0.0	0.0	0.0
		kg	611	2,375	2,375	0.0	0.0	0.0	0.0
	Normal	ton	6.862	23.281	23.281	17.772	2.202	7.720	1.498
		kg	6,862	23,281	23,281	17.772	2,202	7,720	1,498

mnh

Project	: Medan Flood Control	Japan International Cooperation Agency (JICA)	Calculation sheet	
Channel	: Medan Flood Way		Date	
Structure	: Br – Mf 6		Nos of sheet	
Station	: Du 19 + 00		Prepared by	

III.2.8.9 Reinforcing steel bar of Abutment section

Section – 3

Item	Describtion	unit	Normal condition Calcu–lation	Earth quake condition Calcu–lation
-	Allowance stresses			
concrete compressive	fc = K – 225	kg/cm2	*75*	*75*
steel tensile	fs	kg/cm2	*1400*	*1400*
concrete shear	tou without r.bar	kg/cm2	*8*	*8*
	tou with r.bar	kg/cm2	*20*	*20*
transformend	n = Es/Ec		*21*	*21*
Moment	M	t.m	20.672	20.672
		kg.cm	2,067,200	2,067,200
Shear	S	ton	2.376	2.375
		kg	2376	2375
Normal	N	ton	23.281	23.281
		kg	23,281	23,281
dimension	b	cm	*100*	*100*
	ht	cm	*100*	*100*
	d'	cm	*10*	*10*
	h	cm	*90*	*90*
	b.h	cm2	*9,000*	*9,000*
Calculation for reinfor–cement bar with steel full working	eo1=M/N	cm	88.79	88.79
	eo2=1/30.ht,> 2 cm	cm	3.33	3.33
	used eo2	cm	2.00	2.00
	eo=eo1+eo2	cm	90.79	90.79
	eo/ht (see table)		0.91	0.91
	C		7.60	7.60
	lk	cm	750.0	750.0
	100.ht	cm	10,000	10,000
	lk/100.ht	cm	0.0750	0.0750
	(lk/100.ht) ^2	cm	*0.0056*	*0.0056*
	e1=C.[lk/(100.ht)] ^2.ht	cm	*4.275*	*4.275*
	e2=0.15.ht	cm	*15.00*	*15.00*
	e=eo+e1+e2	cm	*110.07*	*110.07*
	ea=e+1/2.ht–d'	cm	150.07	150.07
	M' = N.ea	kg.cm	3,493,743	3,493,743
	n.M'	kg.cm	73,368,609	73,368,609
	b.fs	kg/cm	140,000	140,000
	n.M'/(b.fs)		524.06	524.06
	@sqrt(n.M'/(b.fs))		22.89	22.89
	Ca=h /@sqrt(n.M'/b.fs) see PBI 1971 N.I–2		*3.931*	*3.931*
	n.fc		1,575	1,575
	øo = fs / (n.fc)		0.8889	0.8889
	delta		0.60	0.60
	from table fined Ca		3.962	3.962
	fine ø > øo		2.448	2.448
	ø'		3.737	3.737
	ksi(j)		0.290	0.290
	zeta		0.903	0.903
	100 nw		7.055	7.055
	nw		0.07055	0.07055
	w		0.00336	0.00336
	ea/h		1.67	1.67
	from table fined i		2.13	2.13
	i.A = wbh		30.24	30.24
	A	cm2	14.20	14.20
	A' =delta.	cm2	8.517	8.517

A – used bar dia. 16 mm @ 12.5 cm,
Area @ bar = 2.011
nos of bar = 10
total area = 10 x 2.011
(cm2) = 20.11 cm2 > 14.20

A' – used bar dia. 13 mm @ 12.5 cm,
Area @ bar = 1.327
nos of bar = 10
total area = 10 x 1.327
(cm2) = 13.27 cm2 > 8.52

	steel bar full warking		
	n.ø		51.41
tension of bar	fs	kg/cm2	1,400.00
compressive concrete	fc' = fs / (n.ø)	kg/cm2	27.23
tensile of bar	fs' = fs / ø'	kg/cm2	374.63
	7/8.b.h	cm2	7,875.00
shear concrete	Tca = S / (7/8.b.h)	kg/cm2	0.30

Section – 4

Item	Describtion	unit	Normal condition Calcu–lation	Earth quake condition Calcu–lation
	Allowance stresses			
concrete compressive	fc = K – 225	kg/cm2	*75*	*75*
steel tensile	fs	kg/cm2	*1400*	*1400*
concrete shear	tou without r.bar	kg/cm2	*8*	*8*
	tou with r.bar	kg/cm2	*20*	*20*
transformend	n = Es/Ec		*21*	*21*
Moment	M	t.m	5.565	5.565
		kg.cm	556,500	556,500
Shear	S	ton	7.72	7.72
		kg	7720	7720
dimension	b	cm	*100*	*100*
	ht	cm	*1,300*	*1,300*
	d'	cm	*10*	*10*
	h	cm	*1,290*	*1,290*
	b.h	cm2	*129,000*	*129,000*
	M	kg.cm	556,500	556,500
	n.M	kg.cm	11,686,500	11,686,500
	b.fs	kg/cm	140,000	140,000
	n.M / (b.fs)		83.48	83.48
	@sqrt(n.M /(b.fs))		9.14	9.14
	Ca=h /@sqrt(n.M/b.fs) see PBI 1971 N.I–2		*141.192*	*141.192*
	n.fc		1,575	1,575
	øo = fs / (n.fc)		0.8889	0.8889
	delta		1.00	1.00
	from table fined Ca		12.290	12.290
Calculation for reinfor–cement bar with steel full working	fine ø > øo		8.091	8.091
	ø'		89.000	89.000
	ksi(j)		0.110	0.110
	zeta		0.963	0.963
	100 nw		0.688	0.688
	nw		0.00688	0.00688
	w		0.00033	0.00033
	A	cm2	42.26	42.26
	A' =delta.i.A	cm2	42.26	42.26

A – used bar dia. 25 mm @ 12.5 cm,
Area @ bar = 4.909
nos of bar = 10
total area = 10 x 4.909
(cm2) = 49.09 cm > 42.26 cm2

A' – used bar dia. 25 mm @ 12.5 cm,
Area @ bar = 4.909
nos of bar = 10
total area = 10 x 4.909
(cm2) = 49.09 cm2 > 42.26

	steel bar full warking		
	n.ø		169.91
tension of bar	fs	kg/cm2	1,400.00
compressive concrete	fc' = fs / (n.ø)	kg/cm2	8.24
tensile of bar	fs' = fs / ø'	kg/cm2	15.73
	7/8.b.h	cm2	112,875.00
shear concrete	Tca = S / (7/8.b.h)	kg/cm2	0.07

bar

bar

4.1.14 RAILWAY BRIDGE

Location: FW32+0

Bridge Width : 3.50 m

PRESTRESSED CONCRETE BRIDGE COMPUTATION

CHANNEL MEDAN FLOOD WAY

Br – Mf 4

Station : Fw 30 + 80

Span
31.00

I SUPERSTRUCTURE

- I.1 Slab deck
- I.2 Beam

span = 31 .00 m

- I.2.1 Section properties of beam
- I.2.2 Loading on a beam
- I.2.3 Influence line of Moment
- I.2.4 Sketch of loading
- I.2.5 Moment due to Live Load case – I
- I.2.6 Moment due to Live Load case – II
- I.2.7 Moment due to Dead Load
- I.2.8 Moment due to Wind Pressure
- I.2.9 Load due to Wind Pressure
- I.2.10 Prestress force and number of tendon avaiable
- I.2.11 Centre gravity of tendon
- I.2.12 Prestress loss
- I.2.13 Stresses control
- I.2.14 Layout of tendons
- I.2.15 Shear force and tensile stress
- I.2.16 Deflection

I.3 Loading on Abutment and Pier

Project : Medan Flood Control Channel : Medan Flood Way Structure : Br – F 4 Station : Fw 30 + 80	Japan International Cooperation Agency (JICA)	Calculation sheet Date Nos of sheet Prepared by

I. SUPERSTRUCTURE

I.1 Slab deck

a Load

a.1 Dead Load

Width of slab deck = 4.10 m
Beam distamce = 1.50 m

Slab	=	0.3	x	1.0	x	2,500.0	=	750.00 kg/m'	
Asphalt	=	0.03	x	1.0	x	1,500.0	=	45.00 kg/m'	
Ballast	=	0.65	x	1.0	x	1,800.0	=	1,170.00 kg/m'	
Sand	=	0.15	x	1.0	x	1,800.0	=	270.00 kg/m'	
								2,235.00 kg/m'	
Curb	=	0.35	x	0.83	x	2.00	x	2,500 =	1452.5 kg/m'
Sleeper	=	0.45	x	0.30	x	2.00	x	2,500 =	675.00 kg/m'
Rail	=							=	0.10 kg/m'
									7,127.6 kg/m'

Load per meter width = 7127.6 : 4.1 = 1,738.44 kg/m'
Total load per meter width of slab

q = 2,235.00 + 1,738.44 = 3,973.44 kg/m'

a.2 Live Load

= 12,000 kg

b. Moment

b.1 Moment by dead load

Fixed End Moment = Mqe

Mqe = 1 / 8 x q x lx^2
= 0.125 x 3,973.439 x 2.250
= 1,117.530 kg.m

Span moment = Mqs

Mqs = 1 / 10 x q x lx^2
= 0.100 x 3,973.439 x 2.250
= 894.024 kg.m

b.2 Moment by live load

$$q = \frac{P}{(1.067+(2\times0.83))} = \frac{12,000}{2.727} = 4,400.44 \text{ kg / m2}$$

Fixed End Moment

= 0.05 x q x lx^2
= 0.05 x 4,400.44 x 2.25
= 495.050 kg.m

Span moment

= 0.125 x q x lx^2
= 0.125 x 4,400.44 x 2.25
= 1,237.624 kg.m

Total moment

Fixed end moment = Mdl + Mll
= 1,117.530 + 495.050
= 1,612.579 kg.m

Span moment = Mdl + Mll
= 894.024 + 1,237.624
= 2,131.648 kg.m

b.3 Shear force

By load Sg = 1 / 2 x (g + q) x lx
= 0.500 x 3,973.439 x 1.500
= 2,980.079 kg

C. Reinforcing steel bar of slab deck

Item		Description	unit	Calculation
		Allowance stresses		
concrete compressive	K =	fc	kg/cm2	115.5
steel tensile		fs	kg/cm2	1400
concrete shear		tou without steel bar	kg/cm2	8.04
		tou with steel bar	kg/cm2	20.20
		E steel	kg/cm2	1,897,200
		E concrete	kg/cm2	107,051
transformend		n = Es/Ec		17.72
Moment (kg.cm)		M	kg.cm	2,132
Shear (kg)		S	kg	2,980
		b	cm	100
dimension		ht	cm	20.50
		d'	cm	5
		h	cm	15.50
		b.h	cm2	1,550
		n.M	kg.cm	37,778
		b.fs	kg/cm	140,000
		n.M/(b.fs)		0.27
		@sqrt(n.M'/(b.fs))		0.52
		Ca=h /@sqrt(n.M'/b.fs)		29.838
Calculation for reinfor -		n.fc		2,047
cement bar with		eo = fs/(n.fc)		0.684
steel full working		delta		0.20
		from table fined Ca		12.340
		fine e > eo		8.090
		e'		89.000
		j		0.110
		100 nw		0.681
		nw		0.00681
		w		0.00038
		A = wbh		0.60
		A' =delta.A	cm2	0.119

A - used bar dia. 16 mm @ 12.5 cm,

Area @ bar	=	2.011 cm2	
nos of bar	=	9	
total area	=	9 x	2.011
	=	18.099 >	0.595602377

A' - used bar dia. 13 mm @ 12.5 cm,

Area @ bar	=	1.327 cm2	
nos of bar	=	9	
total area	=	9 x	1.327
	=	11.94 >	0.119

steel bar full warking	n.e			143.37
	fs		kg/cm2	1400
compressive concrete	fc' = fs / (n.e)		kg/cm2	9.76
tensile bar	fs' = fs / e'		kg/cm2	15.73
	7/8.b.h		cm2	1,356.25
shear concrete	Tca = S / (7/8.b.h)		kg/cm2	2.20

slab

Project : Medan Flood Control	Japan International Cooperation Agency (JICA)	Calculation sheet
Channel : Madan Flood Way		Date
Structure : Br - F4		Nos of sheet
Station : Fw 30 + 80		Prepared by

I.2 Beam

I.2.1 Section Properties

Span	=	31.0 m
Width of road way	=	3.5 m
Nos of beam	=	3.0 m
Space of a beam	=	1.75 m
Thick of slab	=	0.25 m

Section Properties

moment static to top fiber

part	depth	width	area	distance to	Ai.Yi	Ai.Yi^2	Ii	Ixi
i	t	w	Ai	Yti	Sx		cm4	cm4
	cm	cm	cm2	cm	cm3	cm4	(9)	(10)
(1)	(2)	(3)	(4)	(5)	(6)	(8)	1/12.b.h^3	(8) + (9)
	H beam	160	cm					
1	12.5	55.0	687.5	6.3	4,296.9	26,855.5	8,951.8	35,807.3
3	22.5	65.0	1,462.5	148.8	217,546.9	32,360,097.7	61,699.2	32,421,796.9
2	125.0	18.0	2,250.0	75.0	168,750.0	12,656,250.0	2,929,687.5	15,585,937.5
4	7.5	18.5	138.8	15.0	2,081.3	31,218.8	433.6	31,652.3
5	10.0	23.5	235.0	134.2	31,529.2	4,230,163.2	1,305.6	4,231,468.8
		total	4,773.8		424,204.2			52,306,662.8

Yt = Sx / Ac = 424,204.17 / 4,773.75 = 88.86 cm

Yb = Ht - Yt
= 160.00 - 88.86 = 71.14 cm

Ix = tot.Ixi - tot.Ai x Yt^2
= 52,306,662.76 - 4,773.75 x 7,896.43
= 52,306,662.76 - 37,695,550.05
= 14,611,103.71 cm4

Section modulus

top fiber Wt = Ix / Yt = 14,611,103.71 / 88.86 = 164,424.97 cm3

bottom fiber Wb = Ix / Yb = 14,611,103.71 / 71.14 = 205,390.50 cm3

Kern

top fiber kt = Wb / Ac = 205,390.50 / 4,773.75 = 43.02 cm

bottom fiber kb = Wt / Ac = 164,424.97 / 4,773.75 = 34.44 cm

Composite section

width of flange = (be)

ACI

Effective flange width (be) lesser than

Clear span = 5,100.0 cm

1	S	=	175.0 cm
2	l/4	=	775.0 cm
	bw	=	16.0 cm
	ht	=	25.00 cm
3	bw + 16 ht	=	416.0 cm

mf4-inr31

		be	=	175.0 cm	
		1 Mpa	=	10.20 kg/cm2	
		1 kg/cm2	=	0.0980 Mpa	
Width of transformed flange = btr					
Concrete Class of deck K – 350			=	350.00 kg/cm2	
			=	34.31 Mpa	
Concrete Class of Precast Prestressed K – 400			=	400 kg/cm2	
Concrete specific			=	39.22 Mpa	
				350	
Ratio of modull (n)			=	-----	
				400	
			=	0.875	
bt	=	n	x	be	
	=	0.875	x	175	
bt	=	153.13 cm		cm	
say		150.0 cm		cm	

Section properties of Composite section
moment static to bottom fiber

part	depth	width	area	distance to	Ai'.Yi'	Ai'.Yi'^2	Ii'	bzi'
	t	w	Ai'	Yb	(4)	(5)	cm4	
	cm	cm	cm2	cm	cm3	cm4	(9)	(8) + (9)
(1)	(2)	(3)	(4)	(5)	(6)	(8)	1/12.b.h^3	
slab	17.5	150.0	2,625.0	175.8	461,343.8	81,081,164.1	86,992.2	81,148,156.3
panel	7.0	150.0	1,050.0	163.5	171,675.0	28,066,882.5	4,287.5	28,073,150.0
beam			4,773.8	71.1	339,595.8	24,158,225.7	14,611,103.7	38,769,329.4
total	24.5		8,448.8		972,614.6			147,990,635.7

		Sx'		972,614.58			
Yb'	=	----	=	----	=	115.12	cm
		Ac'		8,448.75			
Yt'	=	Ht	+	bt	–	Yb'	
	=	160.00	+	24.50	–	115.12	
	=	69.38	cm				
Ix'	=	tot.Ixi'	–	tot.Ai'	x	Yb'^2	
	=	147,990,635.7	–	8,448.8	x	13,252.5	
	=	147,962,186.9	–	111,966,755.8			
	=	36,015,431.2	cm4				

Section modulus

top fiber		Ix'		36,015,431.2			
Wt'	=	----	=	----	=	519,099.1	cm3
		Yt'		69.4			
bottom fiber		Ix'		36,015,431.2			
Wb'	=	----	=	----	=	312,853.0	cm3
		Yb'		115.1			

Kern

top fiber		Wb'		312,853.0			
kt'	=	----	=	----	=	37.0	cm
		Ac'		8,448.8			
bottom fiber		Wt'		519,099.1			
kb'	=	----	=	----	=	61.4	cm
		Ac'		8,448.8			

mf4–inr31

Project	: Medan Flood Control	Japan International Cooperation Agency (JICA)	Calculation sheet
Channel	: Medan Flood Way		Date
Structure	: Br – F4		Nos of sheet
Station	: Fw 30 + 80		Prepared by

I.2.2 Load on beam

span	=	31.60	m	Unit weight of asphalt	=	1.500	t/m3
clear span	=	31.00	m	Thickness of concrete deck	=	0.300	m
				Unit weight of concrete K–225	=	2.400	t/m3
		slab		Unit weight of concrete K–400	=	2.500	t/m3
width of rail way	=	3.50	m	Unit weight of sand	=	1.800	t/m3
width of curb 2 x 0.60 m	=	0.60	m	Unit weight of ballast	=	1.800	t/m3
total width of slab	=	4.10	m	Unit weight of sleeper	=	2.500	t/m3
				Unit weight of rail	=	7.800	t/m3
thickness of ballast	=	0.40	m				
thickness of sand	=	0.15	m				
		beam					
nos = n	=	3.00	m	End block section area	=	0.960	m2
space = S	=	1.50	m	Prestressed section area	=	0.477	m2
thick of web = tw	=	0.18	m	Additional area at end block	=	0.483	m2
depth	=	1.60	m				
depth of flens	=	0.525	m				

cross beam

length	= (S – tw) x nos of beam – 1						
n – 1	=	2.00					
S – tw	=	1.50	–	0.18	=	1.320	m
length	=	1.32	x	2.00	=	2.640	m
width	=	0.20	m				
depth	=	1.600	–	0.525	=	1.075	m
area	=	0.200	x	1.075	=	0.215	m

end block

length	=	2.00	x	1.60	=	3.200	m
volume	=	0.48	x	3.20	=	1.544	m
volume / m run	=	1.54	:	31.00	=	0.050	m

a. By Dead load

Description			width		thick		length		nos		weight		weight / m'
			m		m		m3				t / m3		t / m3
load of a beam					0.4774	x	1.00	x	3.00	x	2.500	=	3.581
end block									0.050	x	2.500	=	0.125
	gb / m'											=	3.705
a.2 Slab	gs / m'	=	4.10	x	0.300	x	1.00	x	1.00	x	2.500	=	3.075
a.3 Asphalt													
	ga / m'	=	3.50	x	ERR	x	1.00	x	1.00	x	1.500	=	ERR
a.4 Ballast													
	gsw /m'	=	3.50	x	0.650	x	1.00	x	1.00	x	1.800	=	4.095
a.5 Cross Beam													
	gcb tot.	=			0.215	x	2.64	x	4.00	x	2.500	=	5.676
	gcb / m'	=							5.68	:	31.00	=	0.183
a.6 Sand													
	gsn/m'	=	3.50	x	0.150	x	1.00	x	1.00	x	1.800	=	0.945
a.7 Concrete curb													
	gcr / m'	=	0.35	x	0.830	x	1.00	x	2.0	x	2.500	=	1.453
a.8 Sleeper													
	g slp / m'	=	0.25	x	1.50	x	0.30	x	1.0	x	2.500	=	0.281
a.8 Rail	grl / m'	=										=	0.100

bm–lod

Project : Medan Flood Control	Japan International Cooperation Agency (JICA)	Calculation sheet	
Channel : Medan Flood Way		Date	
Structur : Br – F4		Nos of sheet	
Station : FW 30 + 60		Prepared by	

I.2.3 Influence line (I.L) of Moment

Ra = Reaction at point " A "
L = Span (m)
X = Distabce each point
I = Point be observated
n = Numbers of point observation
LIl = Distance from point observation to left side (L/s)
LIr = Distance from point observation to right side (R/s)
n = Numbers of point observation to point " I "
nl = Numbers of point observation L/s side point " I "
nr = Numbers of point observation R/s point " I "
YI−1 = Influence line of moment at point " I – 1 "
YI+1 = Influence line of moment at point " I + 1 "

LIl = n.X
LIr = L – LIl

Influence line ordinate left side point " I "

$$Y_{I-1} = \frac{Y_I.n.X}{LIl}$$

Influence line ordinate right side point " I "

$$Y_{I+1} = \frac{Y_I.(Lr - nr.X)}{Lr}$$

L = 31.00 m
X = 1.20 m

Influence line of Reaction of " A "

I	Ra	X	n.X	L–nX	I.L of Moment
	ton	m	m	m	t.m
0.00	1.00	0.00	0.00	31.00	0.000
1.00	0.96	1.20	1.20	29.80	1.154
2.00	0.92	1.20	2.40	28.60	2.214
3.00	0.88	1.20	3.60	27.40	3.182
4.00	0.85	1.20	4.80	26.20	4.057
5.00	0.81	1.20	6.00	25.00	4.839
6.00	0.77	1.20	7.20	23.80	5.528
7.00	0.73	1.20	8.40	22.60	6.124
8.00	0.69	1.20	9.60	21.40	6.627
9.00	0.65	1.20	10.80	20.20	7.037
10.00	0.61	1.20	12.00	19.00	7.355
11.00	0.57	1.20	13.20	17.80	7.579
12.00	0.54	1.20	14.40	16.60	7.711
13.00	0.50	1.20	15.60	15.40	7.750

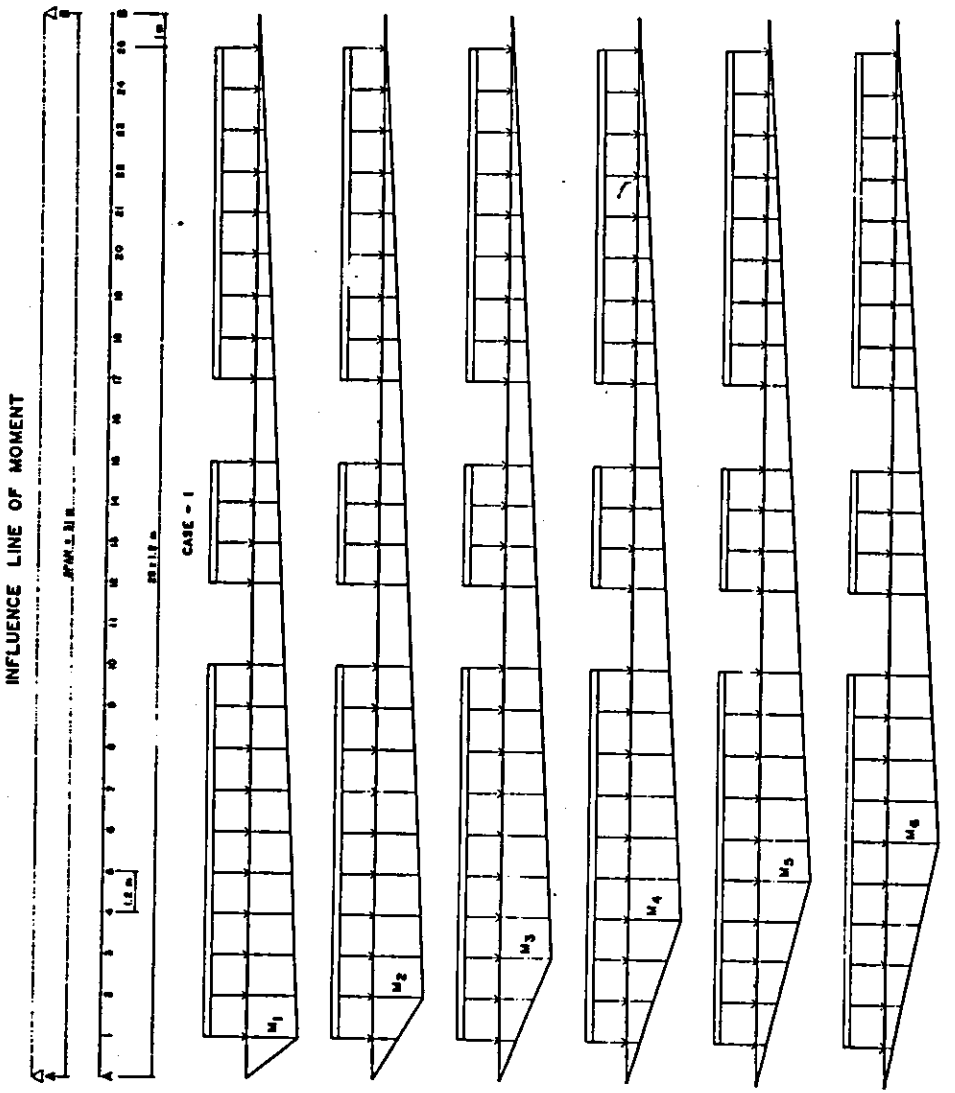

P = 12 TON

CASE - II

I.2.4. SKETCH OF LOAD

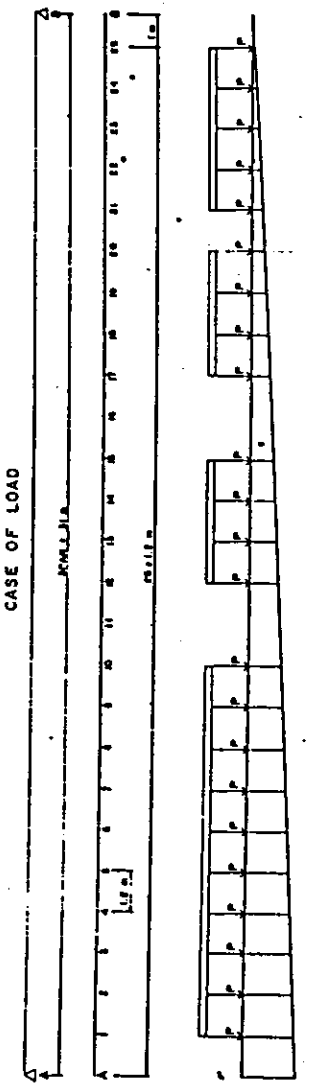

Project	: Medan Flood Control	Japan International Cooperation Agency (JICA)	Calculation sheet
Channel	: Medan Flood Way		Date
Structur	: Br – F4		Nos of sheet
Station	: Fw 30 + 80		Prepared by

I.2.5 Moment by live load

Load Case – I

Ra = Reaction at point " A "
L = Span (m)
X = Distabce each point
i = Point be observated
n = Numbers of point observation
Lil = Distance from point observation to left side (L/s)
Lir = Distance from point observation to right side (R/s)
n = Numbers of point observation to point " I "
nl = Numbers of point observation L/s side point " I "
nr = Numbers of point observation R/s point " I "
Yi–1 = Influence line of moment at point " i – 1 "
Yi+1 = Influence line of moment at point " i + 1 "

Lil = n.X
Lir = L – Lil

Influence line ordinate left side point " i "

$$Yi-1 = \frac{Yi.nl.X}{Lil}$$

Influence line ordinate right side point " i "

$$Yi+1 = \frac{Yi..(Lir-nr.X)}{Lir}$$

L = 31.00 m
X = 1.20 m

Influence line of Reaction of " A "

i	Ra ton	X m	n.X m	L–nX m	I.L of Moment t.m
0.00	1.00	0.00	0.00	31.00	0.000
1.00	0.96	1.20	1.20	29.80	1.154
2.00	0.92	1.20	2.40	28.60	2.214
3.00	0.88	1.20	3.60	27.40	3.182
4.00	0.85	1.20	4.80	26.20	4.057
5.00	0.81	1.20	6.00	25.00	4.839
6.00	0.77	1.20	7.20	23.80	5.528
7.00	0.73	1.20	8.40	22.60	6.124
8.00	0.69	1.20	9.60	21.40	6.627
9.00	0.65	1.20	10.80	20.20	7.037
10.00	0.61	1.20	12.00	19.00	7.355
11.00	0.57	1.20	13.20	17.80	7.579
12.00	0.54	1.20	14.40	16.60	7.711
13.00	0.50	1.20	15.60	15.40	7.750

Moment at point " I "

L = 31.00 m
n = 1.00
X = 1.20 m
n.X = 1.20 m
Lil = n.X = 1.20 m
Lir = L – Lil = 31.00 – 1.20 = 29.80 m

Axel load = 12.00 ton

List of point	Left side point of " i " X	nl	nl.X	Right side point of " i " nr	nr.X	Lir – nr.X	I.L M1 = Yi	L/s Yi–1	R/s Yi+1	Load	M1
1.00	1.20			1.00	1.20	29.80	1.154		1.154	12.0	13.843
2.00	1.20			2.00	2.40	28.60	1.154		1.107	12.0	13.285
3.00	1.20			3.00	3.60	27.40	1.154		1.061	12.0	12.728
4.00	1.20			4.00	4.80	26.20	1.154		1.014	12.0	12.170
5.00	1.20			5.00	6.00	25.00	1.154		0.968	12.0	11.613
6.00	1.20			6.00	7.20	23.80	1.154		0.921	12.0	11.055
7.00	1.20			7.00	8.40	22.60	1.154		0.875	12.0	10.498
8.00	1.20			8.00	9.60	21.40	1.154		0.828	12.0	9.941
9.00	1.20			9.00	10.80	20.20	1.154		0.782	12.0	9.383
10.00	1.20			10.00	12.00	19.00	1.154		0.735	12.0	8.826
11.00	1.20			11.00	13.20	17.80	1.154		0.689		
12.00	1.20			12.00	14.40	16.60	1.154		0.643	12.0	7.711

13.00	1.20		13.00	15.60	15.40	1.154		0.596	12.0	7.154
14.00	1.20		14.00	16.80	14.20	1.154		0.550	12.0	6.596
15.00	1.20		15.00	18.00	13.00	1.154		0.503	12.0	6.039
16.00	1.20		16.00	19.20	11.80	1.154		0.457		
17.00	1.20		17.00	20.40	10.60	1.154		0.410	12.0	4.924
18.00	1.20		18.00	21.60	9.40	1.154		0.364	12.0	4.366
19.00	1.20		19.00	22.80	8.20	1.154		0.317	12.0	3.809
20.00	1.20		20.00	24.00	7.00	1.154		0.271	12.0	3.252
21.00	1.20		21.00	25.20	5.80	1.154		0.225	12.0	2.694
22.00	1.20		22.00	26.40	4.60	1.154		0.178	12.0	2.137
23.00	1.20		23.00	27.60	3.40	1.154		0.132	12.0	1.579
24.00	1.20		24.00	28.80	2.20	1.154		0.085	12.0	1.022
25.00	1.20		25.00	30.00	1.00	1.154		0.039	12.0	0.465
26.00	1.00		26.00	31.00	0.00	1.154		0.000	12.0	0.000
										165.089

Moment at point " 2 "

L = 31.00 m
n = 2.00
X = 1.20 m
n.X = 2.40 m
Lil = n.X = 2.40 m
Lir = L − Lil
= 31.00 − 2.40 = 28.60 m

List of point	Left side point of " i "			Right side point of " i "			I.L M2 = Yi	L/s Yi−1	R/s Yi+1	Load	M2
	X	nl	nl.X	nr	nr.X	Lir−nr.X					
0.00	0.00	0.00	0.00				2.214	0.000		12.0	0.000
1.00	1.20	1.00	1.20				2.214	1.107		12.0	13.285
2.00	1.20	2.00	2.40				2.214	2.214		12.0	26.570
	1.20			1.00	1.20	27.40	2.214		2.121	12.0	25.455
	1.20			2.00	2.40	26.20	2.214		2.028	12.0	24.341
	1.20			3.00	3.60	25.00	2.214		1.935	12.0	23.226
	1.20			4.00	4.80	23.80	2.214		1.843	12.0	22.111
	1.20			5.00	6.00	22.60	2.214		1.750	12.0	20.996
	1.20			6.00	7.20	21.40	2.214		1.657	12.0	19.881
	1.20			7.00	8.40	20.20	2.214		1.564	12.0	18.766
	1.20			8.00	9.60	19.00	2.214		1.471	12.0	17.652
	1.20			9.00	10.80	17.80	2.214		1.378		
	1.20			10.00	12.00	16.60	2.214		1.285	12.0	15.422
	1.20			11.00	13.20	15.40	2.214		1.192	12.0	14.307
	1.20			12.00	14.40	14.20	2.214		1.099	12.0	13.192
	1.20			13.00	15.60	13.00	2.214		1.006	12.0	12.077
	1.20			14.00	16.80	11.80	2.214		0.914		
	1.20			15.00	18.00	10.60	2.214		0.821	12.0	9.848
	1.20			16.00	19.20	9.40	2.214		0.728	12.0	8.733
	1.20			17.00	20.40	8.20	2.214		0.635	12.0	7.618
	1.20			18.00	21.60	7.00	2.214		0.542	12.0	6.503
	1.20			19.00	22.80	5.80	2.214		0.449	12.0	5.388
	1.20			20.00	24.00	4.60	2.214		0.356	12.0	4.274
	1.20			21.00	25.20	3.40	2.214		0.263	12.0	3.159
	1.20			22.00	26.40	2.20	2.214		0.170	12.0	2.044
	1.20			23.00	27.60	1.00	2.214		0.077	12.0	0.929
	1.00			24.00	28.60	0.00	2.214		0.000	12.0	0.000
											315.778

Moment at point " 3 "

L = 31.00 m
n = 3.00
X = 1.20 m
n.X = 3.60 m
Lil = n.X = 3.60 m
Lir = L − Lil
= 31.00 − 3.60 = 27.40 m

List of point	Left side point of " i "			Right side point of " i "			I.L M3 = Yi	L/s Yi−1	R/s Yi+1	Load	M3
	X	nl	nl.X	nr	nr.X	Lir−nr.X					
0.00	0.00	0.00	0.00				3.182	0.000		12.0	0.000
1.00	1.20	1.00	1.20				3.182	1.061		12.0	12.728
2.00	1.20	2.00	2.40				3.182	2.121		12.0	25.455
3.00	1.20	3.00	3.60				3.182	3.182		12.0	38.183
	1.20			1.00	1.20	26.20	3.182		3.043	12.0	36.511
	1.20			2.00	2.40	25.00	3.182		2.903	12.0	34.839
	1.20			3.00	3.60	23.80	3.182		2.764	12.0	33.166
	1.20			4.00	4.80	22.60	3.182		2.625	12.0	31.494
	1.20			5.00	6.00	21.40	3.182		2.485	12.0	29.822
	1.20			6.00	7.20	20.20	3.182		2.346	12.0	28.150
	1.20			7.00	8.40	19.00	3.182		2.206	12.0	26.477
	1.20			8.00	9.60	17.80	3.182		2.067		
	1.20			9.00	10.80	16.60	3.182		1.928	12.0	23.133
	1.20			10.00	12.00	15.40	3.182		1.788	12.0	21.461
	1.20			11.00	13.20	14.20	3.182		1.649	12.0	19.788
	1.20			12.00	14.40	13.00	3.182		1.510	12.0	18.116
	1.20			13.00	15.60	11.80	3.182		1.370		
	1.20			14.00	16.80	10.60	3.182		1.231	12.0	14.772
	1.20			15.00	18.00	9.40	3.182		1.092	12.0	13.099
	1.20			16.00	19.20	8.20	3.182		0.952	12.0	11.427
	1.20			17.00	20.40	7.00	3.182		0.813	12.0	9.755
	1.20			18.00	21.60	5.80	3.182		0.674	12.0	8.083
	1.20			19.00	22.80	4.60	3.182		0.534	12.0	6.410
	1.20			20.00	24.00	3.40	3.182		0.395	12.0	4.738
	1.20			21.00	25.20	2.20	3.182		0.255	12.0	3.066
	1.20			22.00	26.40	1.00	3.182		0.116	12.0	1.394
	1.00			23.00	27.40	0.00	3.182		0.000	12.0	0.000
											452.07

Moment at point " 4 "

L = 31.00 m
n = 4.00
X = 1.20 m
n.X = 4.80 m
Lil = n.X = 4.80 m
Lir = L − Lil
= 31.00 − 4.80 = 26.20 m

List of point	Left side point of " i "			Right side point of " i "			I.L M4 = Yi	L/s Yi−1	R/s Yi+1	Load	M4
	X	nl	nl.X	nr	nr.X	Lir−nr.X					
0.00	0.00	0.00	0.00				4.057	0.000		12.0	0.000
1.00	1.20	1.00	1.20				4.057	1.014		12.0	12.170
2.00	1.20	2.00	2.40				4.057	2.028		12.0	24.341
3.00	1.20	3.00	3.60				4.057	3.043		12.0	36.511
4.00	1.20	4.00	4.80				4.057	4.057		12.0	48.681
	1.20			1.00	1.20	25.00	4.057		3.871	12.0	46.452
	1.20			2.00	2.40	23.80	4.057		3.685	12.0	44.222
	1.20			3.00	3.60	22.60	4.057		3.499	12.0	41.992
	1.20			4.00	4.80	21.40	4.057		3.314	12.0	39.763
	1.20			5.00	6.00	20.20	4.057		3.128	12.0	37.533
	1.20			6.00	7.20	19.00	4.057		2.942	12.0	35.303
	1.20			7.00	8.40	17.80	4.057		2.756		
	1.20			8.00	9.60	16.60	4.057		2.570	12.0	30.844
	1.20			9.00	10.80	15.40	4.057		2.385	12.0	28.614
	1.20			10.00	12.00	14.20	4.057		2.199	12.0	26.385
	1.20			11.00	13.20	13.00	4.057		2.013	12.0	24.155
	1.20			12.00	14.40	11.80	4.057		1.827		
	1.20			13.00	15.60	10.60	4.057		1.641	12.0	19.695
	1.20			14.00	16.80	9.40	4.057		1.455	12.0	17.466
	1.20			15.00	18.00	8.20	4.057		1.270	12.0	15.236
	1.20			16.00	19.20	7.00	4.057		1.084	12.0	13.006
	1.20			17.00	20.40	5.80	4.057		0.898	12.0	10.777
	1.20			18.00	21.60	4.60	4.057		0.712	12.0	8.547
	1.20			19.00	22.80	3.40	4.057		0.526	12.0	6.317
	1.20			20.00	24.00	2.20	4.057		0.341	12.0	4.088
	1.20			21.00	25.20	1.00	4.057		0.155	12.0	1.858
	1.00			22.00	26.20	0.00	4.057		0.000	12.0	0.000
											573.956

Moment at point " 5 "

L = 31.00 m
n = 5.00
X = 1.20 m
n.X = 6.00 m
Lil = n.X = 6.00 m
Lir = L − Lil
= 31.00 − 6.00 = 25.00 m

List of point	Left side point of " i "			Right side point of " i "			I.L M5 = Yi	L/s Yi−1	R/s Yi+1	Load	M5
	X	nl	nl.X	nr	nr.X	Lir−nr.X					
0.00	0.00	0.00	0.00				4.839	0.000		12.0	0.000
1.00	1.20	1.00	1.20				4.839	0.968		12.0	11.613
2.00	1.20	2.00	2.40				4.839	1.935		12.0	23.226
3.00	1.20	3.00	3.60				4.839	2.903		12.0	34.839
4.00	1.20	4.00	4.80				4.839	3.871		12.0	46.452
5.00	1.20	5.00	6.00				4.839	4.839		12.0	58.065
	1.20			1.00	1.20	23.80	4.839		4.606	12.0	55.277
	1.20			2.00	2.40	22.60	4.839		4.374	12.0	52.490
	1.20			3.00	3.60	21.40	4.839		4.142	12.0	49.703
	1.20			4.00	4.80	20.20	4.839		3.910	12.0	46.916
	1.20			5.00	6.00	19.00	4.839		3.677	12.0	44.129
	1.20			6.00	7.20	17.80	4.839		3.445		
	1.20			7.00	8.40	16.60	4.839		3.213	12.0	38.555
	1.20			8.00	9.60	15.40	4.839		2.981	12.0	35.768
	1.20			9.00	10.80	14.20	4.839		2.748	12.0	32.981

	1.20			10.00	12.00	13.00	4.839		2.516	12.0	30.194
	1.20			11.00	13.20	11.80	4.839		2.284		
	1.20			12.00	14.40	10.60	4.839		2.052	12.0	24.619
	1.20			13.00	15.60	9.40	4.839		1.819	12.0	21.832
	1.20			14.00	16.80	8.20	4.839		1.587	12.0	19.045
	1.20			15.00	18.00	7.00	4.839		1.355	12.0	16.258
	1.20			16.00	19.20	5.80	4.839		1.123	12.0	13.471
	1.20			17.00	20.40	4.60	4.839		0.890	12.0	10.684
	1.20			18.00	21.60	3.40	4.839		0.658	12.0	7.897
	1.20			19.00	22.80	2.20	4.839		0.426	12.0	5.110
	1.20			20.00	24.00	1.00	4.839		0.194	12.0	2.323
	1.00			21.00	25.00	0.00	4.839		0.000	12.0	0.000
											681.445

Moment at point " 6 "

L = 31.00 m
n = 6.00
X = 1.20 m
n.X = 7.20 m
Lil = n.X = 7.20 m
Lir = L − Lil
= 31.00 − 7.20 = 23.80 m

List of point	Left side point of " i "			Right side point of " i "			I.L M6	L/s	R/s		
	X	ni	ni.X	nr	nr.X	Lir − nr.X	= Yi	Yi−1	Yi+1	Load	M6
0.00	0.00	0.00	0.00				5.528	0.000		12.0	0.000
1.00	1.20	1.00	1.20				5.528	0.921		12.0	11.055
2.00	1.20	2.00	2.40				5.528	1.843		12.0	22.111
3.00	1.20	3.00	3.60				5.528	2.764		12.0	33.166
4.00	1.20	4.00	4.80				5.528	3.685		12.0	44.222
5.00	1.20	5.00	6.00				5.528	4.606		12.0	55.277
6.00	1.20	6.00	7.20				5.528	5.528		12.0	66.333
	1.20			1.00	1.20	22.60	5.528		5.249	12.0	62.988
	1.20			2.00	2.40	21.40	5.528		4.970	12.0	59.644
	1.20			3.00	3.60	20.20	5.528		4.692	12.0	56.299
	1.20			4.00	4.80	19.00	5.528		4.413	12.0	52.955
	1.20			5.00	6.00	17.80	5.528		4.134		
	1.20			6.00	7.20	16.60	5.528		3.855	12.0	46.266
	1.20			7.00	8.40	15.40	5.528		3.577	12.0	42.921
	1.20			8.00	9.60	14.20	5.528		3.298	12.0	39.577
	1.20			9.00	10.80	13.00	5.528		3.019	12.0	36.232
	1.20			10.00	12.00	11.80	5.528		2.741		
	1.20			11.00	13.20	10.60	5.528		2.462	12.0	29.543
	1.20			12.00	14.40	9.40	5.528		2.183	12.0	26.199
	1.20			13.00	15.60	8.20	5.528		1.905	12.0	22.854
	1.20			14.00	16.80	7.00	5.528		1.626	12.0	19.510
	1.20			15.00	18.00	5.80	5.528		1.347	12.0	16.165
	1.20			16.00	19.20	4.60	5.528		1.068	12.0	12.821
	1.20			17.00	20.40	3.40	5.528		0.790	12.0	9.476
	1.20			18.00	21.60	2.20	5.528		0.511	12.0	6.132
	1.20			19.00	22.80	1.00	5.528		0.232	12.0	2.787
	1.00			20.00	23.80	0.00	5.528		0.000	12.0	0.000
											774.534

Moment at point " 7 "

L = 31.00 m
n = 7.00
X = 1.20 m
n.X = 8.40 m
Lil = n.X = 8.40 m
Lir = L − Lil
= 31.00 − 8.40 = 22.60 m

List of point	Left side point of " i "			Right side point of " i "			I.L M7	L/s	R/s		
	X	ni	ni.X	nr	nr.X	Lir − nr.X	= Yi	Yi−1	Yi+1	Load	M7
0.00	0.00	0.00	0.00				6.124	0.000		12.0	0.000
1.00	1.20	1.00	1.20				6.124	0.875		12.0	10.498
2.00	1.20	2.00	2.40				6.124	1.750		12.0	20.996
3.00	1.20	3.00	3.60				6.124	2.625		12.0	31.494
4.00	1.20	4.00	4.80				6.124	3.499		12.0	41.992
5.00	1.20	5.00	6.00				6.124	4.374		12.0	52.490
6.00	1.20	6.00	7.20				6.124	5.249		12.0	62.988
7.00	1.20	7.00	8.40				6.124	6.124		12.0	73.486
	1.20			1.00	1.20	21.40	6.124		5.799	12.0	69.585
	1.20			2.00	2.40	20.20	6.124		5.474	12.0	65.683
	1.20			3.00	3.60	19.00	6.124		5.148	12.0	61.781
	1.20			4.00	4.80	17.80	6.124		4.823		
	1.20			5.00	6.00	16.60	6.124		4.498	12.0	53.977
	1.20			6.00	7.20	15.40	6.124		4.173	12.0	50.075
	1.20			7.00	8.40	14.20	6.124		3.848	12.0	46.173
	1.20			8.00	9.60	13.00	6.124		3.523	12.0	42.271
	1.20			9.00	10.80	11.80	6.124		3.197		
	1.20			10.00	12.00	10.60	6.124		2.872	12.0	34.467

	1.20			11.00	13.20	9.40	6.124		2.547	12.0	30.565
	1.20			12.00	14.40	8.20	6.124		2.222	12.0	26.663
	1.20			13.00	15.60	7.00	6.124		1.897	12.0	22.761
	1.20			14.00	16.80	5.80	6.124		1.572	12.0	18.859
	1.20			15.00	18.00	4.60	6.124		1.246	12.0	14.957
	1.20			16.00	19.20	3.40	6.124		0.921	12.0	11.055
	1.20			17.00	20.40	2.20	6.124		0.596	12.0	7.154
	1.20			18.00	21.60	1.00	6.124		0.271	12.0	3.252
	1.00			19.00	22.60	0.00	6.124		0.000	12.0	0.000
											853.223

Moment at point " 8 "

L = 31.00 m
n = 8.00
X = 1.20 m
n.X = 9.60 m
Lil = n.X = 9.60 m
Lir = L − Lil
= 31.00 − 9.60 = 21.40 m

List of point	Left side point of " i "			Right side point of " i "			I.L M8	L/s	R/s		
	X	ni	ni.X	nr	nr.X	Lir − nr.X	= Yi	Yi−1	Yi+1	Load	M8
0.00	0.00	0.00	0.00				6.627	0.000		12.0	0.000
1.00	1.20	1.00	1.20				6.627	0.828		12.0	9.941
2.00	1.20	2.00	2.40				6.627	1.657		12.0	19.881
3.00	1.20	3.00	3.60				6.627	2.485		12.0	29.822
4.00	1.20	4.00	4.80				6.627	3.314		12.0	39.763
5.00	1.20	5.00	6.00				6.627	4.142		12.0	49.703
6.00	1.20	6.00	7.20				6.627	4.970		12.0	59.644
7.00	1.20	7.00	8.40				6.627	5.799		12.0	69.585
8.00	1.20	8.00	9.60				6.627	6.627		12.0	79.525
	1.20			1.00	1.20	20.20	6.627		6.255	12.0	75.066
	1.20			2.00	2.40	19.00	6.627		5.884	12.0	70.606
	1.20			3.00	3.60	17.80	6.627		5.512		
	1.20			4.00	4.80	16.60	6.627		5.141	12.0	61.688
	1.20			5.00	6.00	15.40	6.627		4.769	12.0	57.228
	1.20			6.00	7.20	14.20	6.627		4.397	12.0	52.769
	1.20			7.00	8.40	13.00	6.627		4.026	12.0	48.310
	1.20			8.00	9.60	11.80	6.627		3.654		
	1.20			9.00	10.80	10.60	6.627		3.283	12.0	39.391
	1.20			10.00	12.00	9.40	6.627		2.911	12.0	34.932
	1.20			11.00	13.20	8.20	6.627		2.539	12.0	30.472
	1.20			12.00	14.40	7.00	6.627		2.168	12.0	26.013
	1.20			13.00	15.60	5.80	6.627		1.796	12.0	21.554
	1.20			14.00	16.80	4.60	6.627		1.425	12.0	17.094
	1.20			15.00	18.00	3.40	6.627		1.053	12.0	12.635
	1.20			16.00	19.20	2.20	6.627		0.681	12.0	8.175
	1.20			17.00	20.40	1.00	6.627		0.310	12.0	3.716
	1.00			18.00	21.40	0.00	6.627		0.000	12.0	0.000
											917.51

Moment at point " 9 "

L = 31.00 m
n = 9.00
X = 1.20 m
n.X = 10.80 m
Lil = n.X = 10.80 m
Lir = L − Lil
= 31.00 − 10.80 = 20.20 m

List of point	Left side point of " i "			Right side point of " i "			I.L M9	L/s	R/s		
	X	ni	ni.X	nr	nr.X	Lir − nr.X	= Yi	Yi−1	Yi+1	Load	M9
0.00	0.00	0.00	0.00				7.037	0.000		12.0	0.000
1.00	1.20	1.00	1.20				7.037	0.782		12.0	9.383
2.00	1.20	2.00	2.40				7.037	1.564		12.0	18.766
3.00	1.20	3.00	3.60				7.037	2.346		12.0	28.150
4.00	1.20	4.00	4.80				7.037	3.128		12.0	37.533
5.00	1.20	5.00	6.00				7.037	3.910		12.0	46.916
6.00	1.20	6.00	7.20				7.037	4.692		12.0	56.299
7.00	1.20	7.00	8.40				7.037	5.474		12.0	65.683
8.00	1.20	8.00	9.60				7.037	6.255		12.0	75.066
9.00	1.20	9.00	10.80				7.037	7.037		12.0	84.449
	1.20			1.00	1.20	19.00	7.037		6.619	12.0	79.432
	1.20			2.00	2.40	17.80	7.037		6.201		
	1.20			3.00	3.60	16.60	7.037		5.783	12.0	69.399
	1.20			4.00	4.80	15.40	7.037		5.365	12.0	64.382
	1.20			5.00	6.00	14.20	7.037		4.947	12.0	59.365
	1.20			6.00	7.20	13.00	7.037		4.529	12.0	54.348
	1.20			7.00	8.40	11.80	7.037		4.111		
	1.20			8.00	9.60	10.60	7.037		3.693	12.0	44.315
	1.20			9.00	10.80	9.40	7.037		3.275	12.0	39.298
	1.20			10.00	12.00	8.20	7.037		2.857	12.0	34.281
	1.20			11.00	13.20	7.00	7.037		2.439	12.0	29.265

	1.20		12.00	14.40	5.80	7.037		2.021	12.0	24.248
	1.20		13.00	15.60	4.60	7.037		1.603	12.0	19.231
	1.20		14.00	16.80	3.40	7.037		1.185	12.0	14.214
	1.20		15.00	18.00	2.20	7.037		0.766	12.0	9.197
	1.20		16.00	19.20	1.00	7.037		0.348	12.0	4.181
	1.00		17.00	20.20	0.00	7.037		0.000	12.0	0.000
										987.401

Moment at point " 10 "

L	=	31.00	m			
n	=	10.00				
X	=	1.20	m			
n.X	=	12.00	m			
Li	=	n.X	=	12.00	m	
Lr	=	L	−	Li		
	=	31.00	−	12.00	=	19.00 m

List of point	Left side point of " I "			Right side point of " I "			I.L M10	L/s	R/s		
	X	nl	nl.X	nr	nr.X	Lir−nr.X	= Yi	Yi−1	Yi+1	Load	M10
0.00	0.00	0.00	0.00				7.355	0.000		12.0	0.000
1.00	1.20	1.00	1.20				7.355	0.735		12.0	8.826
2.00	1.20	2.00	2.40				7.355	1.471		12.0	17.652
3.00	1.20	3.00	3.60				7.355	2.206		12.0	26.477
4.00	1.20	4.00	4.80				7.355	2.942		12.0	35.303
5.00	1.20	5.00	6.00				7.355	3.677		12.0	44.129
6.00	1.20	6.00	7.20				7.355	4.413		12.0	52.955
7.00	1.20	7.00	8.40				7.355	5.148		12.0	61.781
8.00	1.20	8.00	9.60				7.355	5.884		12.0	70.606
9.00	1.20	9.00	10.80				7.355	6.619		12.0	79.432
10.00	1.20	10.00	12.00				7.355	7.355		12.0	88.258
	1.20			1.00	1.20	17.80	7.355				
	1.20			2.00	2.40	16.60	7.355		6.426	12.0	77.110
	1.20			3.00	3.60	15.40	7.355		5.961	12.0	71.535
	1.20			4.00	4.80	14.20	7.355		5.497	12.0	65.961
	1.20			5.00	6.00	13.00	7.355		5.032	12.0	60.387
	1.20			6.00	7.20	11.80	7.355				
	1.20			7.00	8.40	10.60	7.355		4.103	12.0	49.239
	1.20			8.00	9.60	9.40	7.355		3.639	12.0	43.665
	1.20			9.00	10.80	8.20	7.355		3.174	12.0	38.090
	1.20			10.00	12.00	7.00	7.355		2.710	12.0	32.516
	1.20			11.00	13.20	5.80	7.355		2.245	12.0	26.942
	1.20			12.00	14.40	4.60	7.355		1.781	12.0	21.368
	1.20			13.00	15.60	3.40	7.355		1.316	12.0	15.794
	1.20			14.00	16.80	2.20	7.355		0.852	12.0	10.219
	1.20			15.00	18.00	1.00	7.355		0.387	12.0	4.645
	1.00			16.00	19.00	0.00	7.355		0.000	12.0	0.000
											1,002.890

Moment at point " 11 "

L	=	31.00	m			
n	=	11.00				
X	=	1.20	m			
n.X	=	13.20	m			
Li	=	n.X	=	13.20	m	
Lr	=	L	−	Li		
	=	31.00	−	13.20	=	17.80 m

List of point	Left side point of " I "			Right side point of " I "			I.L M11	L/s	R/s		
	X	nl	nl.X	nr	nr.X	Lir−nr.X	= Yi	Yi−1	Yi+1	Load	M11
0.00	0.00	0.00	0.00				7.579	0.000		12.0	0.000
1.00	1.20	1.00	1.20				7.579	0.689		12.0	8.268
2.00	1.20	2.00	2.40				7.579	1.378		12.0	16.537
3.00	1.20	3.00	3.60				7.579	2.067		12.0	24.805
4.00	1.20	4.00	4.80				7.579	2.756		12.0	33.074
5.00	1.20	5.00	6.00				7.579	3.445		12.0	41.342
6.00	1.20	6.00	7.20				7.579	4.134		12.0	49.610
7.00	1.20	7.00	8.40				7.579	4.823		12.0	57.879
8.00	1.20	8.00	9.60				7.579	5.512		12.0	66.147
9.00	1.20	9.00	10.80				7.579	6.201		12.0	74.415
10.00	1.20	10.00	12.00				7.579	6.890		12.0	82.684
11.00	1.20	11.00	13.20				7.579	7.579		12.0	
	1.20			1.00	1.20	16.60	7.579		7.068	12.0	84.821
	1.20			2.00	2.40	15.40	7.579		6.557	12.0	78.689
	1.20			3.00	3.60	14.20	7.579		6.046	12.0	72.557
	1.20			4.00	4.80	13.00	7.579		5.535	12.0	66.426
	1.20			5.00	6.00	11.80	7.579		5.025		
	1.20			6.00	7.20	10.60	7.579		4.514	12.0	54.163
	1.20			7.00	8.40	9.40	7.579		4.003	12.0	48.031
	1.20			8.00	9.60	8.20	7.579		3.492	12.0	41.899
	1.20			9.00	10.80	7.00	7.579		2.981	12.0	35.768
	1.20			10.00	12.00	5.80	7.579		2.470	12.0	29.636
	1.20			11.00	13.20	4.60	7.579		1.959	12.0	23.505
	1.20			12.00	14.40	3.40	7.579		1.448	12.0	17.373
	1.20			13.00	15.60	2.20	7.579		0.937	12.0	11.241

	1.20		14.00	16.80	1.00	7.579		0.426	12.0	5.110
	1.00		15.00	17.80	0.00	7.579		0.000	12.0	0.000
										1,023.979

Moment at point " 12 "

L	=	31.00	m			
n	=	12.00				
X	=	1.20	m			
n.X	=	14.40	m			
Li	=	n.X	=	14.40	m	
Lr	=	L	−	Li		
	=	31.00	−	14.40	=	16.60 m

List of point	Left side point of " I "			Right side point of " I "			I.L M12	L/s	R/s		
	X	nl	nl.X	nr	nr.X	Lir−nr.X	= Yi	Yi−1	Yi+1	Load	M12
0.00	0.00	0.00	0.00				7.711	0.000		12.0	0.000
1.00	1.20	1.00	1.20				7.711	0.643		12.0	7.711
2.00	1.20	2.00	2.40				7.711	1.285		12.0	15.422
3.00	1.20	3.00	3.60				7.711	1.928		12.0	23.133
4.00	1.20	4.00	4.80				7.711	2.570		12.0	30.844
5.00	1.20	5.00	6.00				7.711	3.213		12.0	38.555
6.00	1.20	6.00	7.20				7.711	3.855		12.0	46.266
7.00	1.20	7.00	8.40				7.711	4.498		12.0	53.977
8.00	1.20	8.00	9.60				7.711	5.141		12.0	61.688
9.00	1.20	9.00	10.80				7.711	5.783		12.0	69.399
10.00	1.20	10.00	12.00				7.711	6.426		12.0	77.110
11.00	1.20	11.00	13.20				7.711	7.068		12.0	
12.00	1.20	12.00	14.40				7.711	7.711		12.0	92.532
	1.20			1.00	1.20	15.40	7.711		7.154	12.0	85.843
	1.20			2.00	2.40	14.20	7.711		6.596	12.0	79.154
	1.20			3.00	3.60	13.00	7.711		6.039	12.0	72.465
	1.20			4.00	4.80	11.80	7.711		5.481		
	1.20			5.00	6.00	10.60	7.711		4.924	12.0	59.086
	1.20			6.00	7.20	9.40	7.711		4.366	12.0	52.397
	1.20			7.00	8.40	8.20	7.711		3.809	12.0	45.708
	1.20			8.00	9.60	7.00	7.711		3.252	12.0	39.019
	1.20			9.00	10.80	5.80	7.711		2.694	12.0	32.330
	1.20			10.00	12.00	4.60	7.711		2.137	12.0	25.641
	1.20			11.00	13.20	3.40	7.711		1.579	12.0	18.952
	1.20			12.00	14.40	2.20	7.711		1.022	12.0	12.263
	1.20			13.00	15.60	1.00	7.711		0.465	12.0	5.574
	1.00			14.00	16.60	0.00	7.711		0.000	12.0	0.000
											1,045.068

Moment at point " 13 "

L	=	31.00	m			
n	=	13.00				
X	=	1.20	m			
n.X	=	15.60	m			
Li	=	n.X	=	15.60	m	
Lr	=	L	−	Li		
	=	31.00	−	15.60	=	15.40 m

List of point	Left side point of " I "			Right side point of " I "			I.L M13	L/s	R/s		
	X	nl	nl.X	nr	nr.X	Lir−nr.X	= Yi	Yi−1	Yi+1	Load	M13
0.00	0.00	0.00	0.00				7.750	0.000		12.0	0.000
1.00	1.20	1.00	1.20				7.750	0.596		12.0	7.154
2.00	1.20	2.00	2.40				7.750	1.192		12.0	14.307
3.00	1.20	3.00	3.60				7.750	1.788		12.0	21.461
4.00	1.20	4.00	4.80				7.750	2.385		12.0	28.614
5.00	1.20	5.00	6.00				7.750	2.981		12.0	35.768
6.00	1.20	6.00	7.20				7.750	3.577		12.0	42.921
7.00	1.20	7.00	8.40				7.750	4.173		12.0	50.075
8.00	1.20	8.00	9.60				7.750	4.769		12.0	57.228
9.00	1.20	9.00	10.80				7.750	5.365		12.0	64.382
10.00	1.20	10.00	12.00				7.750	5.961		12.0	71.535
11.00	1.20	11.00	13.20				7.750	6.557			
12.00	1.20	12.00	14.40				7.750	7.154		12.0	85.843
13.00	1.20	13.00	15.60				7.750	7.750		12.0	92.996
	1.20			1.00	1.20	14.20	7.750		7.146	12.0	85.750
	1.20			2.00	2.40	13.00	7.750		6.542	12.0	78.503
	1.20			3.00	3.60	11.80	7.750		5.938		
	1.20			4.00	4.80	10.60	7.750		5.334	12.0	64.010
	1.20			5.00	6.00	9.40	7.750		4.730	12.0	56.764
	1.20			6.00	7.20	8.20	7.750		4.126	12.0	49.517
	1.20			7.00	8.40	7.00	7.750		3.523	12.0	42.271
	1.20			8.00	9.60	5.80	7.750		2.919	12.0	35.025
	1.20			9.00	10.80	4.60	7.750		2.315	12.0	27.778
	1.20			10.00	12.00	3.40	7.750		1.711	12.0	20.532

1.20		11.00	13.20	2.20	7.750		1.107	12.0	13.285
1.20		12.00	14.40	1.00	7.750		0.503	12.0	6.039
1.00		13.00	15.40	0.00	7.750		0.000	12.0	0.000
									1,051.757

Resume moment with load of case – I

List of point	Distance m	Moment t.m
1.00	1.200	165.069
2.00	2.400	315.778
3.00	3.600	452.067
4.00	4.800	573.956
5.00	6.000	681.445
6.00	7.200	774.534
7.00	8.400	853.223
8.00	9.600	917.512
9.00	10.800	967.401
10.00	12.000	1,002.890
11.00	13.200	1,023.979
12.00	14.400	1,045.068
13.00	15.600	1,051.757

Project	: Medan Flood Control	Japan International Cooperation Agency (JICA)	Calculation sheet
Channel	: Medan Flood Way		Date
Structur	: Br – F4		Nos of sheet
Station	: Fw 30 + 80		Prepared by

I.2.6 Moment by live

Case – II

Ra = Reaction at point " A "
L = Span (m)
X = Distabce each point
i = Point be observated
n = Numbers of point observation
Lil = Distance from point observation to left side (L/s)
Lir = Distance from point observation to right side (R/s)
n = Numbers of point observation to point " i "
nl = Numbers of point observation L/s side point " i "
nr = Numbers of point observation R/s point " i "
Yi–1 = Influence line of moment at point " i – 1 "
Yi+1 = Influence line of moment at point " i + 1 "

Lil = n.X
Lir = L –

Influence line ordinate left side point " i "

$$Yi-1 = \frac{Yi.nl.X}{Lil}$$

Influence line ordinate right side point " i "

$$Yi+1 = \frac{Yi.(Lir-nr.X)}{Lir}$$

L = 31.00 m
X = 1.20 m

Influence line of Reaction of " A "

i	X m	n.X m	L–nX m	Ra ton	Moment t.m
0.00	0.00	0.00	31.00	1.00	0.000
1.00	1.20	1.20	29.80	0.96	1.154
2.00	1.20	2.40	28.60	0.92	2.214
3.00	1.20	3.60	27.40	0.88	3.182
4.00	1.20	4.80	26.20	0.85	4.057
5.00	1.20	6.00	25.00	0.81	4.839
6.00	1.20	7.20	23.80	0.77	5.528
7.00	1.20	8.40	22.60	0.73	6.124
8.00	1.20	9.60	21.40	0.69	6.627
9.00	1.20	10.80	20.20	0.65	7.037
10.00	1.20	12.00	19.00	0.61	7.355
11.00	1.20	13.20	17.80	0.57	7.579
12.00	1.20	14.40	16.60	0.54	7.711
13.00	1.20	15.60	15.40	0.50	7.750

Moment at point " i "

L = 31.00 m
n = 1.00
X = 1.20 m
n.X = 1.20 m
Lil = n.X = 1.20 m
Lir = L – Lil
= 31.00 – 1.20 = 29.80 m

Axel load = 12.00 ton

List of point	Left side point of " i " X	nl	n.X	Right side point of " i " nr	nr.X	Lir–nr.X	I.L M1 = Yi	L/s Yi–1	R/s Yi+1	Load	M1
1.00	1.20			1.00	1.20	29.80	1.154		1.154	12.0	13.843
2.00	1.20			2.00	2.40	28.60	1.154		1.107	12.0	13.285
3.00	1.20			3.00	3.60	27.40	1.154		1.061	12.0	12.728
4.00	1.20			4.00	4.80	26.20	1.154		1.014	12.0	12.170
5.00	1.20			5.00	6.00	25.00	1.154		0.968	12.0	11.613
6.00	1.20			6.00	7.20	23.80	1.154		0.921	12.0	11.055
7.00	1.20			7.00	8.40	22.60	1.154		0.875	12.0	10.498
8.00	1.20			8.00	9.60	21.40	1.154		0.828	12.0	9.941
9.00	1.20			9.00	10.80	20.20	1.154		0.782	12.0	9.383
10.00	1.20			10.00	12.00	19.00	1.154		0.735	12.0	8.826
11.00	1.20			11.00	13.20	17.80	1.154		0.689		
12.00	1.20			12.00	14.40	16.60	1.154		0.643	12.0	7.711
13.00	1.20			13.00	15.60	15.40	1.154		0.596	12.0	7.154

14.00	1.20		14.00	16.80	14.20	1.154		0.550	12.0	6.596
15.00	1.20		15.00	18.00	13.00	1.154		0.503	12.0	6.039
16.00	1.20		16.00	19.20	11.80	1.154		0.457		
17.00	1.20		17.00	20.40	10.60	1.154		0.410	12.0	4.924
18.00	1.20		18.00	21.60	9.40	1.154		0.364	12.0	4.366
19.00	1.20		19.00	22.80	8.20	1.154		0.317	12.0	3.809
20.00	1.20		20.00	24.00	7.00	1.154		0.271	12.0	3.252
21.00	1.20		21.00	25.20	5.80	1.154		0.225		
22.00	1.20		22.00	26.40	4.60	1.154		0.178	12.0	2.137
23.00	1.20		23.00	27.60	3.40	1.154		0.132	12.0	1.579
24.00	1.20		24.00	28.80	2.20	1.154		0.085	12.0	1.022
25.00	1.20		25.00	30.00	1.00	1.154		0.039	12.0	0.465
26.00	1.00		26.00	31.00	0.00	1.154		0.000	12.0	0.000
										162.395

Moment at point " 2 "

L = 31.00 m
n = 2.00
X = 1.20 m
n.X = 2.40 m
Lil = n.X = 2.40 m
Lir = L − Lil
= 31.00 − 2.40 = 28.60 m

List of point	Left side point of " i "			Right side point of " i "			I.L M2 = Yi	L/s Yi−1	R/s Yi+1	Load	M2
	X	ni	ni.X	nr	nr.X	Lir − nr.X					
0.00	0.00	0.00	0.00				2.214	0.000		12.0	0.000
1.00	1.20	1.00	1.20				2.214	1.107		12.0	13.285
2.00	1.20	2.00	2.40				2.214	2.214		12.0	26.570
	1.20			1.00	1.20	27.40	2.214		2.121	12.0	25.455
	1.20			2.00	2.40	26.20	2.214		2.028	12.0	24.341
	1.20			3.00	3.60	25.00	2.214		1.935	12.0	23.226
	1.20			4.00	4.80	23.80	2.214		1.843	12.0	22.111
	1.20			5.00	6.00	22.60	2.214		1.750	12.0	20.996
	1.20			6.00	7.20	21.40	2.214		1.657	12.0	19.881
	1.20			7.00	8.40	20.20	2.214		1.564	12.0	18.766
	1.20			8.00	9.60	19.00	2.214		1.471	12.0	17.652
	1.20			9.00	10.80	17.80	2.214		1.378		
	1.20			10.00	12.00	16.60	2.214		1.285	12.0	15.422
	1.20			11.00	13.20	15.40	2.214		1.192	12.0	14.307
	1.20			12.00	14.40	14.20	2.214		1.099	12.0	13.192
	1.20			13.00	15.60	13.00	2.214		1.006	12.0	12.077
	1.20			14.00	16.80	11.80	2.214		0.914		
	1.20			15.00	18.00	10.60	2.214		0.821	12.0	9.848
	1.20			16.00	19.20	9.40	2.214		0.728	12.0	8.733
	1.20			17.00	20.40	8.20	2.214		0.635	12.0	7.618
	1.20			18.00	21.60	7.00	2.214		0.542	12.0	6.503
	1.20			19.00	22.80	5.80	2.214		0.449		
	1.20			20.00	24.00	4.60	2.214		0.356	12.0	4.274
	1.20			21.00	25.20	3.40	2.214		0.263	12.0	3.159
	1.20			22.00	26.40	2.20	2.214		0.170	12.0	2.044
	1.20			23.00	27.60	1.00	2.214		0.077	12.0	0.929
	1.00			24.00	28.60	0.00	2.214		0.000	12.0	0.000
											310.390

Moment at point " 3 "

L = 31.00 m
n = 3.00
X = 1.20 m
n.X = 3.60 m
Lil = n.X = 3.60 m
Lir = L − Lil
= 31.00 − 3.60 = 27.40 m

List of point	Left side point of " i "			Right side point of " i "			I.L M3 = Yi	L/s Yi−1	R/s Yi+1	Load	M3
	X	ni	ni.X	nr	nr.X	Lir − nr.X					
0.00	0.00	0.00	0.00				3.182	0.000		12.0	0.000
1.00	1.20	1.00	1.20				3.182	1.061		12.0	12.728
2.00	1.20	2.00	2.40				3.182	2.121		12.0	25.455
3.00	1.20	3.00	3.60				3.182	3.182		12.0	38.183
	1.20			1.00	1.20	26.20	3.182		3.043	12.0	36.511
	1.20			2.00	2.40	25.00	3.182		2.903	12.0	34.839
	1.20			3.00	3.60	23.80	3.182		2.784	12.0	33.166
	1.20			4.00	4.80	22.60	3.182		2.625	12.0	31.494
	1.20			5.00	6.00	21.40	3.182		2.485	12.0	29.822
	1.20			6.00	7.20	20.20	3.182		2.346	12.0	28.150
	1.20			7.00	8.40	19.00	3.182		2.206	12.0	26.477
	1.20			8.00	9.60	17.80	3.182		2.067		
	1.20			9.00	10.80	16.60	3.182		1.928	12.0	23.133

ii−m2

	1.20		10.00	12.00	15.40	3.182		1.788	12.0	21.461
	1.20		11.00	13.20	14.20	3.182		1.649	12.0	19.786
	1.20		12.00	14.40	13.00	3.182		1.510	12.0	18.116
	1.20		13.00	15.60	11.80	3.182		1.370		
	1.20		14.00	16.80	10.60	3.182		1.231	12.0	14.772
	1.20		15.00	18.00	9.40	3.182		1.092	12.0	13.099
	1.20		16.00	19.20	8.20	3.182		0.952	12.0	11.427
	1.20		17.00	20.40	7.00	3.182		0.813	12.0	9.755
	1.20		18.00	21.60	5.80	3.182		0.674		
	1.20		19.00	22.80	4.60	3.182		0.534	12.0	6.410
	1.20		20.00	24.00	3.40	3.182		0.395	12.0	4.738
	1.20		21.00	25.20	2.20	3.182		0.255	12.0	3.066
	1.20		22.00	26.40	1.00	3.182		0.116	12.0	1.394
	1.00		23.00	27.40	0.00	3.182		0.000	12.0	0.000
										443.98

Moment at point " 4 "

L = 31.00 m
n = 4.00
X = 1.20 m
n.X = 4.80 m
Lil = n.X = 4.80 m
Lir = L − Lil
= 31.00 − 4.80 = 26.20 m

List of point	Left side point of " i "			Right side point of " i "			I.L M4 = Yi	L/s Yi−1	R/s Yi+1	Load	M4
	X	ni	ni.X	nr	nr.X	Lir − nr.X					
0.00	0.00	0.00	0.00				4.057	0.000		12.0	0.000
1.00	1.20	1.00	1.20				4.057	1.014		12.0	12.170
2.00	1.20	2.00	2.40				4.057	2.028		12.0	24.341
3.00	1.20	3.00	3.60				4.057	3.043		12.0	36.511
4.00	1.20	4.00	4.80				4.057	4.057		12.0	48.681
	1.20			1.00	1.20	25.00	4.057		3.871	12.0	46.452
	1.20			2.00	2.40	23.80	4.057		3.685	12.0	44.222
	1.20			3.00	3.60	22.60	4.057		3.499	12.0	41.992
	1.20			4.00	4.80	21.40	4.057		3.314	12.0	39.763
	1.20			5.00	6.00	20.20	4.057		3.128	12.0	37.533
	1.20			6.00	7.20	19.00	4.057		2.942	12.0	35.303
	1.20			7.00	8.40	17.80	4.057		2.756		
	1.20			8.00	9.60	16.60	4.057		2.570	12.0	30.844
	1.20			9.00	10.80	15.40	4.057		2.385	12.0	28.614
	1.20			10.00	12.00	14.20	4.057		2.199	12.0	26.385
	1.20			11.00	13.20	13.00	4.057		2.013	12.0	24.155
	1.20			12.00	14.40	11.80	4.057		1.827		
	1.20			13.00	15.60	10.60	4.057		1.641	12.0	19.695
	1.20			14.00	16.80	9.40	4.057		1.455	12.0	17.466
	1.20			15.00	18.00	8.20	4.057		1.270	12.0	15.236
	1.20			16.00	19.20	7.00	4.057		1.084	12.0	13.006
	1.20			17.00	20.40	5.80	4.057		0.898		
	1.20			18.00	21.60	4.60	4.057		0.712	12.0	8.547
	1.20			19.00	22.80	3.40	4.057		0.526	12.0	6.317
	1.20			20.00	24.00	2.20	4.057		0.341	12.0	4.088
	1.20			21.00	25.20	1.00	4.057		0.155	12.0	1.858
	1.00			22.00	26.20	0.00	4.057		0.000	12.0	0.000
											563.179

Moment at point " 5 "

L = 31.00 m
n = 5.00
X = 1.20 m
n.X = 6.00 m
Lil = n.X = 6.00 m
Lir = L − Lil
= 31.00 − 6.00 = 25.00 m

List of point	Left side point of " i "			Right side point of " i "			I.L M5 = Yi	L/s Yi−1	R/s Yi+1	Load	M5
	X	ni	ni.X	nr	nr.X	Lir − nr.X					
0.00	0.00	0.00	0.00				4.839	0.000		12.0	0.000
1.00	1.20	1.00	1.20				4.839	0.968		12.0	11.613
2.00	1.20	2.00	2.40				4.839	1.935		12.0	23.226
3.00	1.20	3.00	3.60				4.839	2.903		12.0	34.839
4.00	1.20	4.00	4.80				4.839	3.871		12.0	46.452
5.00	1.20	5.00	6.00				4.839	4.839		12.0	58.065
	1.20			1.00	1.20	23.80	4.839		4.606	12.0	55.277
	1.20			2.00	2.40	22.60	4.839		4.374	12.0	52.490
	1.20			3.00	3.60	21.40	4.839		4.142	12.0	49.703
	1.20			4.00	4.80	20.20	4.839		3.910	12.0	46.916
	1.20			5.00	6.00	19.00	4.839		3.677	12.0	44.129
	1.20			6.00	7.20	17.80	4.839		3.445		
	1.20			7.00	8.40	16.60	4.839		3.213	12.0	38.555
	1.20			8.00	9.60	15.40	4.839		2.981	12.0	35.768
	1.20			9.00	10.80	14.20	4.839		2.748	12.0	32.981
	1.20			10.00	12.00	13.00	4.839		2.516	12.0	30.194

ii−m2

	1.20			11.00	13.20	11.80	4.839		2.284		
	1.20			12.00	14.40	10.60	4.839		2.052	12.0	24.619
	1.20			13.00	15.60	9.40	4.839		1.819	12.0	21.832
	1.20			14.00	16.80	8.20	4.839		1.587	12.0	19.045
	1.20			15.00	18.00	7.00	4.839		1.355	12.0	16.258
	1.20			16.00	19.20	5.80	4.839		1.123		
	1.20			17.00	20.40	4.60	4.839		0.890	12.0	10.684
	1.20			18.00	21.60	3.40	4.839		0.658	12.0	7.897
	1.20			19.00	22.80	2.20	4.839		0.426	12.0	5.110
	1.20			20.00	24.00	1.00	4.839		0.194	12.0	2.323
	1.00			21.00	25.00	0.00	4.839		0.000	12.0	0.000
											667.974

Moment at point " 6 "

L = 31.00 m
n = 6.00
X = 1.20 m
n.X = 7.20 m
Lil = n.X = 7.20 m
Lir = L − Lil
= 31.00 − 7.20 = 23.80 m

List of point	Left side point of " i " X	ni	ni.X	Right side point of " j " nr	nr.X	Lir − nr.X	I.L M6 = Yi	Li/s Yi−1	Ri/s Yi+1	Load	M6
0.00	0.00	0.00	0.00				5.528	0.000		12.0	0.000
1.00	1.20	1.00	1.20				5.528	0.921		12.0	11.055
2.00	1.20	2.00	2.40				5.528	1.843		12.0	22.111
3.00	1.20	3.00	3.60				5.528	2.764		12.0	33.166
4.00	1.20	4.00	4.80				5.528	3.685		12.0	44.222
5.00	1.20	5.00	6.00				5.528	4.606		12.0	55.277
6.00	1.20	6.00	7.20				5.528	5.528		12.0	66.333
	1.20			1.00	1.20	22.60	5.528		5.249	12.0	62.988
	1.20			2.00	2.40	21.40	5.528		4.970	12.0	59.644
	1.20			3.00	3.60	20.20	5.528		4.692	12.0	56.299
	1.20			4.00	4.80	19.00	5.528		4.413	12.0	52.955
	1.20			5.00	6.00	17.80	5.528		4.134		
	1.20			6.00	7.20	16.60	5.528		3.855	12.0	46.266
	1.20			7.00	8.40	15.40	5.528		3.577	12.0	42.921
	1.20			8.00	9.60	14.20	5.528		3.298	12.0	39.577
	1.20			9.00	10.80	13.00	5.528		3.019	12.0	36.232
	1.20			10.00	12.00	11.80	5.528		2.741		
	1.20			11.00	13.20	10.60	5.528		2.462	12.0	29.543
	1.20			12.00	14.40	9.40	5.528		2.183	12.0	26.199
	1.20			13.00	15.60	8.20	5.528		1.905	12.0	22.854
	1.20			14.00	16.80	7.00	5.528		1.626	12.0	19.510
	1.20			15.00	18.00	5.80	5.528		1.347		
	1.20			16.00	19.20	4.60	5.528		1.068	12.0	12.821
	1.20			17.00	20.40	3.40	5.528		0.790	12.0	9.476
	1.20			18.00	21.60	2.20	5.528		0.511	12.0	6.132
	1.20			19.00	22.80	1.00	5.528		0.232	12.0	2.787
	1.00			20.00	23.80	0.00	5.528		0.000	12.0	0.000
											758.369

Moment at point " 7 "

L = 31.00 m
n = 7.00
X = 1.20 m
n.X = 8.40 m
Lil = n.X = 8.40 m
Lir = L − Lil
= 31.00 − 8.40 = 22.60 m

List of point	Left side point of " i " X	ni	ni.X	Right side point of " j " nr	nr.X	Lir − nr.X	I.L M7 = Yi	Li/s Yi−1	Ri/s Yi+1	Load	M7
0.00	0.00	0.00	0.00				6.124	0.000		12.0	0.000
1.00	1.20	1.00	1.20				6.124	0.875		12.0	10.498
2.00	1.20	2.00	2.40				6.124	1.750		12.0	20.996
3.00	1.20	3.00	3.60				6.124	2.625		12.0	31.494
4.00	1.20	4.00	4.80				6.124	3.499		12.0	41.992
5.00	1.20	5.00	6.00				6.124	4.374		12.0	52.490
6.00	1.20	6.00	7.20				6.124	5.249		12.0	62.988
7.00	1.20	7.00	8.40				6.124	6.124		12.0	73.486
	1.20			1.00	1.20	21.40	6.124		5.799	12.0	69.585
	1.20			2.00	2.40	20.20	6.124		5.474	12.0	65.683
	1.20			3.00	3.60	19.00	6.124		5.148	12.0	61.781
	1.20			4.00	4.80	17.80	6.124		4.823		
	1.20			5.00	6.00	16.60	6.124		4.498	12.0	53.977
	1.20			6.00	7.20	15.40	6.124		4.173	12.0	50.075
	1.20			7.00	8.40	14.20	6.124		3.848	12.0	46.173
	1.20			8.00	9.60	13.00	6.124		3.523	12.0	42.271
	1.20			9.00	10.80	11.80	6.124		3.197		
	1.20			10.00	12.00	10.60	6.124		2.872	12.0	34.467
	1.20			11.00	13.20	9.40	6.124		2.547	12.0	30.565

	1.20			12.00	14.40	8.20	6.124		2.222	12.0	26.663
	1.20			13.00	15.60	7.00	6.124		1.897	12.0	22.761
	1.20			14.00	16.80	5.80	6.124		1.572		
	1.20			15.00	18.00	4.60	6.124		1.246	12.0	14.957
	1.20			16.00	19.20	3.40	6.124		0.921	12.0	11.055
	1.20			17.00	20.40	2.20	6.124		0.596	12.0	7.154
	1.20			18.00	21.60	1.00	6.124		0.271	12.0	3.252
	1.00			19.00	22.60	0.00	6.124		0.000	12.0	0.000
											834.364

Moment at point " 8 "

L = 31.00 m
n = 8.00
X = 1.20 m
n.X = 9.60 m
Lil = n.X = 9.60 m
Lir = L − Lil
= 31.00 − 9.60 = 21.40 m

List of point	Left side point of " i " X	ni	ni.X	Right side point of " j " nr	nr.X	Lir − nr.X	I.L M8 = Yi	Li/s Yi−1	Ri/s Yi+1	Load	M8
0.00	0.00	0.00	0.00				6.627	0.000		12.0	0.000
1.00	1.20	1.00	1.20				6.627	0.828		12.0	9.941
2.00	1.20	2.00	2.40				6.627	1.657		12.0	19.881
3.00	1.20	3.00	3.60				6.627	2.485		12.0	29.822
4.00	1.20	4.00	4.80				6.627	3.314		12.0	39.763
5.00	1.20	5.00	6.00				6.627	4.142		12.0	49.703
6.00	1.20	6.00	7.20				6.627	4.970		12.0	59.644
7.00	1.20	7.00	8.40				6.627	5.799		12.0	69.585
8.00	1.20	8.00	9.60				6.627	6.627		12.0	79.525
	1.20			1.00	1.20	20.20	6.627		6.255	12.0	75.066
	1.20			2.00	2.40	19.00	6.627		5.884	12.0	70.608
	1.20			3.00	3.60	17.80	6.627		5.512		
	1.20			4.00	4.80	16.60	6.627		5.141	12.0	61.688
	1.20			5.00	6.00	15.40	6.627		4.769	12.0	57.228
	1.20			6.00	7.20	14.20	6.627		4.397	12.0	52.769
	1.20			7.00	8.40	13.00	6.627		4.026	12.0	48.310
	1.20			8.00	9.60	11.80	6.627		3.654		
	1.20			9.00	10.80	10.60	6.627		3.283	12.0	39.391
	1.20			10.00	12.00	9.40	6.627		2.911	12.0	34.932
	1.20			11.00	13.20	8.20	6.627		2.539	12.0	30.472
	1.20			12.00	14.40	7.00	6.627		2.168	12.0	26.013
	1.20			13.00	15.60	5.80	6.627		1.796		
	1.20			14.00	16.80	4.60	6.627		1.425	12.0	17.094
	1.20			15.00	18.00	3.40	6.627		1.053	12.0	12.635
	1.20			16.00	19.20	2.20	6.627		0.681	12.0	8.175
	1.20			17.00	20.40	1.00	6.627		0.310	12.0	3.716
	1.00			18.00	21.40	0.00	6.627		0.000	12.0	0.000
											895.96

Moment at point " 9 "

L = 31.00 m
n = 9.00
X = 1.20 m
n.X = 10.80 m
Lil = n.X = 10.80 m
Lir = L − Lil
= 31.00 − 10.80 = 20.20 m

List of point	Left side point of " i " X	ni	ni.X	Right side point of " j " nr	nr.X	Lir − nr.X	I.L M9 = Yi	Li/s Yi−1	Ri/s Yi+1	Load	M9
0.00	0.00	0.00	0.00				7.037	0.000		12.0	0.000
1.00	1.20	1.00	1.20				7.037	0.782		12.0	9.383
2.00	1.20	2.00	2.40				7.037	1.564		12.0	18.766
3.00	1.20	3.00	3.60				7.037	2.346		12.0	28.150
4.00	1.20	4.00	4.80				7.037	3.128		12.0	37.533
5.00	1.20	5.00	6.00				7.037	3.910		12.0	46.916
6.00	1.20	6.00	7.20				7.037	4.692		12.0	56.299
7.00	1.20	7.00	8.40				7.037	5.474		12.0	65.683
8.00	1.20	8.00	9.60				7.037	6.255		12.0	75.066
9.00	1.20	9.00	10.80				7.037	7.037		12.0	84.449
	1.20			1.00	1.20	19.00	7.037		6.619	12.0	79.432
	1.20			2.00	2.40	17.80	7.037		6.201		
	1.20			3.00	3.60	16.60	7.037		5.783	12.0	69.399
	1.20			4.00	4.80	15.40	7.037		5.365	12.0	64.382
	1.20			5.00	6.00	14.20	7.037		4.947	12.0	59.365
	1.20			6.00	7.20	13.00	7.037		4.529	12.0	54.348
	1.20			7.00	8.40	11.80	7.037		4.111		
	1.20			8.00	9.60	10.60	7.037		3.693	12.0	44.315
	1.20			9.00	10.80	9.40	7.037		3.275	12.0	39.298
	1.20			10.00	12.00	8.20	7.037		2.857	12.0	34.281
	1.20			11.00	13.20	7.00	7.037		2.439	12.0	29.265
	1.20			12.00	14.40	5.80	7.037		2.021		

	1.20			13.00	15.60	4.60	7.037		1.603	12.0	19.231
	1.20			14.00	16.80	3.40	7.037		1.185	12.0	14.214
	1.20			15.00	18.00	2.20	7.037		0.766	12.0	9.197
	1.20			16.00	19.20	1.00	7.037		0.348	12.0	4.181
	1.00			17.00	20.20	0.00	7.037		0.000	12.0	0.000
											943.154

Moment at point " 10 "

L = 31.00 m
n = 10.00
X = 1.20 m
n.X = 12.00 m
Lil = n.X = 12.00 m
Lir = L − Lil
= 31.00 − 12.00 = 19.00 m

List of point	Left side point of " i "			Right side point of " i "			I.L M10 = Yi	L/s Yi−1	R/s Yi+1	Load	M10
	X	ni	ni.X	nr	nr.X	Lir−nr.X					
0.00	0.00	0.00	0.00				7.355	0.000		12.0	0.000
1.00	1.20	1.00	1.20				7.355	0.735		12.0	8.826
2.00	1.20	2.00	2.40				7.355	1.471		12.0	17.652
3.00	1.20	3.00	3.60				7.355	2.206		12.0	26.477
4.00	1.20	4.00	4.80				7.355	2.942		12.0	35.303
5.00	1.20	5.00	6.00				7.355	3.677		12.0	44.129
6.00	1.20	6.00	7.20				7.355	4.413		12.0	52.955
7.00	1.20	7.00	8.40				7.355	5.148		12.0	61.781
8.00	1.20	8.00	9.60				7.355	5.884		12.0	70.606
9.00	1.20	9.00	10.80				7.355	6.619		12.0	79.432
10.00	1.20	10.00	12.00				7.355	7.355		12.0	88.258
	1.20			1.00	1.20	17.80	7.355				
	1.20			2.00	2.40	16.60	7.355		6.426	12.0	77.110
	1.20			3.00	3.60	15.40	7.355		5.961	12.0	71.535
	1.20			4.00	4.80	14.20	7.355		5.497	12.0	65.961
	1.20			5.00	6.00	13.00	7.355		5.032	12.0	60.387
	1.20			6.00	7.20	11.80	7.355				
	1.20			7.00	8.40	10.60	7.355		4.103	12.0	49.239
	1.20			8.00	9.60	9.40	7.355		3.639	12.0	43.665
	1.20			9.00	10.80	8.20	7.355		3.174	12.0	38.090
	1.20			10.00	12.00	7.00	7.355		2.710	12.0	32.516
	1.20			11.00	13.20	5.80	7.355		2.245		
	1.20			12.00	14.40	4.60	7.355		1.781	12.0	21.368
	1.20			13.00	15.60	3.40	7.355		1.316	12.0	15.794
	1.20			14.00	16.80	2.20	7.355		0.852	12.0	10.219
	1.20			15.00	18.00	1.00	7.355		0.387	12.0	4.645
	1.00			16.00	19.00	0.00	7.355		0.000	12.0	0.000
											975.948

Moment at point " 11 "

L = 31.00 m
n = 11.00
X = 1.20 m
n.X = 13.20 m
Lil = n.X = 13.20 m
Lir = L − Lil
= 31.00 − 13.20 = 17.80 m

List of point	Left side point of " i "			Right side point of " i "			I.L M11 = Yi	L/s Yi−1	R/s Yi+1	Load	M11
	X	ni	ni.X	nr	nr.X	Lir−nr.X					
0.00	0.00	0.00	0.00				7.579	0.000		12.0	0.000
1.00	1.20	1.00	1.20				7.579	0.689		12.0	8.268
2.00	1.20	2.00	2.40				7.579	1.378		12.0	16.537
3.00	1.20	3.00	3.60				7.579	2.067		12.0	24.805
4.00	1.20	4.00	4.80				7.579	2.756		12.0	33.074
5.00	1.20	5.00	6.00				7.579	3.445		12.0	41.342
6.00	1.20	6.00	7.20				7.579	4.134		12.0	49.610
7.00	1.20	7.00	8.40				7.579	4.823		12.0	57.879
8.00	1.20	8.00	9.60				7.579	5.512		12.0	66.147
9.00	1.20	9.00	10.80				7.579	6.201		12.0	74.415
10.00	1.20	10.00	12.00				7.579	6.890		12.0	82.684
11.00	1.20	11.00	13.20				7.579	7.579		12.0	
	1.20			1.00	1.20	16.60	7.579		7.068	12.0	84.821
	1.20			2.00	2.40	15.40	7.579		6.557	12.0	78.689
	1.20			3.00	3.60	14.20	7.579		6.046	12.0	72.557
	1.20			4.00	4.80	13.00	7.579		5.535	12.0	66.426
	1.20			5.00	6.00	11.80	7.579		5.025		
	1.20			6.00	7.20	10.60	7.579		4.514	12.0	54.163
	1.20			7.00	8.40	9.40	7.579		4.003	12.0	48.031
	1.20			8.00	9.60	8.20	7.579		3.492	12.0	41.899
	1.20			9.00	10.80	7.00	7.579		2.981	12.0	35.768
	1.20			10.00	12.00	5.80	7.579		2.470		
	1.20			11.00	13.20	4.60	7.579		1.959	12.0	23.505
	1.20			12.00	14.40	3.40	7.579		1.448	12.0	17.373
	1.20			13.00	15.60	2.20	7.579		0.937	12.0	11.241
	1.20			14.00	16.80	1.00	7.579		0.426	12.0	5.110
	1.00			15.00	17.80	0.00	7.579		0.000	12.0	0.000
											994.343

Moment at point " 12 "

L = 31.00 m
n = 12.00
X = 1.20 m
n.X = 14.40 m
Lil = n.X = 14.40 m
Lir = L − Lil
= 31.00 − 14.40 = 16.60 m

List of point	Left side point of " i "			Right side point of " i "			I.L M12 = Yi	L/s Yi−1	R/s Yi+1	Load	M12
	X	ni	ni.X	nr	nr.X	Lir−nr.X					
0.00	0.00	0.00	0.00				7.711	0.000		12.0	0.000
1.00	1.20	1.00	1.20				7.711	0.643		12.0	7.711
2.00	1.20	2.00	2.40				7.711	1.285		12.0	15.422
3.00	1.20	3.00	3.60				7.711	1.928		12.0	23.133
4.00	1.20	4.00	4.80				7.711	2.570		12.0	30.844
5.00	1.20	5.00	6.00				7.711	3.213		12.0	38.555
6.00	1.20	6.00	7.20				7.711	3.855		12.0	46.266
7.00	1.20	7.00	8.40				7.711	4.498		12.0	53.977
8.00	1.20	8.00	9.60				7.711	5.141		12.0	61.688
9.00	1.20	9.00	10.80				7.711	5.783		12.0	69.399
10.00	1.20	10.00	12.00				7.711	6.426		12.0	77.110
11.00	1.20	11.00	13.20				7.711	7.068		12.0	
12.00	1.20	12.00	14.40				7.711	7.711		12.0	92.532
	1.20			1.00	1.20	15.40	7.711		7.154	12.0	85.843
	1.20			2.00	2.40	14.20	7.711		6.596	12.0	79.154
	1.20			3.00	3.60	13.00	7.711		6.039	12.0	72.465
	1.20			4.00	4.80	11.80	7.711		5.481		
	1.20			5.00	6.00	10.60	7.711		4.924	12.0	59.086
	1.20			6.00	7.20	9.40	7.711		4.366	12.0	52.397
	1.20			7.00	8.40	8.20	7.711		3.809	12.0	45.708
	1.20			8.00	9.60	7.00	7.711		3.252	12.0	39.019
	1.20			9.00	10.80	5.80	7.711		2.694		
	1.20			10.00	12.00	4.60	7.711		2.137	12.0	25.641
	1.20			11.00	13.20	3.40	7.711		1.579	12.0	18.952
	1.20			12.00	14.40	2.20	7.711		1.022	12.0	12.263
	1.20			13.00	15.60	1.00	7.711		0.465	12.0	5.574
	1.00			14.00	16.60	0.00	7.711		0.000	12.0	0.000
											1,012.738

Moment at point " 13 "

L = 31.00 m
n = 13.00
X = 1.20 m
n.X = 15.60 m
Lil = n.X = 15.60 m
Lir = L − Lil
= 31.00 − 15.60 = 15.40 m

List of point	Left side point of " i "			Right side point of " i "			I.L M13 = Yi	L/s Yi−1	R/s Yi+1	Load	M13
	X	ni	ni.X	nr	nr.X	Lir−nr.X					
0.00	0.00	0.00	0.00				7.750	0.000		12.0	0.000
1.00	1.20	1.00	1.20				7.750	0.596		12.0	7.154
2.00	1.20	2.00	2.40				7.750	1.192		12.0	14.307
3.00	1.20	3.00	3.60				7.750	1.788		12.0	21.461
4.00	1.20	4.00	4.80				7.750	2.385		12.0	28.614
5.00	1.20	5.00	6.00				7.750	2.981		12.0	35.768
6.00	1.20	6.00	7.20				7.750	3.577		12.0	42.921
7.00	1.20	7.00	8.40				7.750	4.173		12.0	50.075
8.00	1.20	8.00	9.60				7.750	4.769		12.0	57.228
9.00	1.20	9.00	10.80				7.750	5.365		12.0	64.382
10.00	1.20	10.00	12.00				7.750	5.961		12.0	71.535
11.00	1.20	11.00	13.20				7.750	6.557			
12.00	1.20	12.00	14.40				7.750	7.154		12.0	85.843
13.00	1.20	13.00	15.60				7.750	7.750		12.0	92.996
	1.20			1.00	1.20	14.20	7.750		7.146	12.0	85.750
	1.20			2.00	2.40	13.00	7.750		6.542	12.0	78.503
	1.20			3.00	3.60	11.80	7.750		5.938		
	1.20			4.00	4.80	10.60	7.750		5.334	12.0	64.010
	1.20			5.00	6.00	9.40	7.750		4.730	12.0	56.764
	1.20			6.00	7.20	8.20	7.750		4.126	12.0	49.517
	1.20			7.00	8.40	7.00	7.750		3.523	12.0	42.271
	1.20			8.00	9.60	5.80	7.750		2.919		
	1.20			9.00	10.80	4.60	7.750		2.315	12.0	27.778
	1.20			10.00	12.00	3.40	7.750		1.711	12.0	20.532
	1.20			11.00	13.20	2.20	7.750		1.107	12.0	13.285
	1.20			12.00	14.40	1.00	7.750		0.503	12.0	6.039
	1.00			13.00	15.40	0.00	7.750		0.000	12.0	0.000
											1,016.733

Resume moment by load case –I and case – II

List of point	Distance m	Case – I Moment t.m	Case – II Moment t.m
1.00	1.200	165.089	162.39
2.00	2.400	315.778	310.39
3.00	3.600	452.067	443.98
4.00	4.800	573.956	563.16
5.00	6.000	681.445	667.97
6.00	7.200	774.534	758.37
7.00	8.400	853.223	834.36
8.00	9.600	917.512	895.96
9.00	10.800	967.401	943.15
10.00	12.000	1,002.890	975.95
11.00	13.200	1,023.979	994.34
12.00	14.400	1,045.068	1,012.74
13.00	15.600	1,051.757	1,016.73

Maximum moment due to Live Load by case – I

ll-m2

Project : Medan Flood Control Channel : Medan Flood Way Structure : Br – F4 Station : Fw 30 + 80	Japan International Cooperation Agency (JICA)	Calculation sheet Date Nos of sheet Prepared by

I.2.7 Moment due to Dead Load

span	=	31.60 m	Unit weight of asphalt	=	1.500 t/m3
clear span	=	31.00 m	Thickness of deck	=	0.300 m
			Y concrete K–225	=	2.400 t/m3
	slab		Y concrete K–400	=	2.500 t/m3
width of rail way	=	3.50 m	Unit weight of sand	=	1.800 t/m3
width of curb 2 x 0.60 m	=	0.60 m	Unit weight of ballast	=	1.800 t/m3
total width of slab	=	4.10 m	Unit weight of sleeper	=	2.500 t/m3
			Unit weight of rail	=	7.800 t/m3
thickness of ballast	=	0.40 m			
thickness of sand	=	0.15 m			
thickness of sand	=	0.030 m			
	beam				
nos = n	=	3.00 m	End block section area	=	0.960 m2
space = S	=	1.00 m	Prestressed section area	=	0.477 m2
thick of web = tw	=	0.18 m	Additional area at		
depth	=	1.60 m	end block	=	0.483 m2
depth of flens	=	0.525 m			

cross beam

length	= (S – tw) x nos of beam – 1					
n – 1	=	2.00				
S – tw	=	1.00	–	0.18	=	0.820 m
length	=	0.82	x	2.00	=	1.640 m
width	=	0.20 m				
depth	=	1.600	–	0.525	=	1.075 m
area	=	0.200	x	1.075	=	0.215 m

end block

length	=	2.00	x	1.60	=	3.200 m
volume	=	0.48	x	3.20	=	1.544 m
volume / m run	=	1.54	:	31.00	=	0.050 m

a. By Dead load per meter width of bridge

Description		width m	x	thick m	x	length m3	x	nos	x	weight t / m3	=	weight / m' t / m3
load of a beam				0.4774	x	1.00	x	3.00	x	2.500	=	3.581
end block								0.050	x	2.500	=	0.125
gb / m'											=	3.705
a.2 Slab gs / m'	=	4.10	x	0.300	x	1.00	x	1.00	x	2.500	=	3.075
a.3 Asphalt												
ga / m'	=	3.50	x	0.03	x	1.00	x	1.00	x	1.500	=	0.158
a.4 Ballast												
gsw /m'	=	3.50	x	0.450	x	1.00	x	1.00	x	1.800	=	2.835
a.5 Cross Beam												
gcb tot.	=			0.215	x	1.64	x	4.00	x	2.500	=	3.526
gcb / m'	=							3.53	:	31.00	=	0.114
a.6 Sand												
gsn/m'	=	3.50	x	0.150	x	1.00	x	1.00	x	1.800	=	0.945
a.7 Concrete curb												
gcr / m'	=	0.35	x	0.830	x	1.00	x	2.0	x	2.500	=	1.453
a.8 Sleeper												
g slp / m'	=	0.25	x	1.50	x	0.30	x	1.0	x	2.500	=	0.281
a.8 Rail grl / m'	=										=	0.100

mom-dl

Loading condition

by self weight of beam	=	3.705 t.m
by slab	=	3.075 t.m
by cross beam	=	0.114 t.m
by concrete curb	=	1.453 t.m
total load by dead load	=	4.64 t.m
by asphalt	=	0.158 t.m
by ballast	=	2.835 t.m
by sand	=	0.945 t.m
by sleeper	=	0.281 t.m
by rail	=	0.100 t.m
total load by super imposed load	=	4.319 t.m

Bending moment by dead load

Moment at point " 1 "

Description	Load t / m'	span m	Influence Line (I.L) Moment t.m	Influence Line (I.L) Area t.m2	Moment M 1 t.m
by self weight of beam	3.705	31.00	1.154	17.89	66.272
by dead load	4.641	31.00	1.154	17.89	83.018
by super imposed	4.319	31.00	1.154	17.89	77.249

Moment at point " 2 "

Description	Load t / m'	span m	Influence Line (I.L) Moment t.m	Influence Line (I.L) Area t.m2	Moment M 2 t.m
by self weight of beam	3.705	31.00	2.214	34.32	127.146
by dead load	4.641	31.00	2.214	34.32	159.273
by super imposed	4.319	31.00	2.214	34.32	148.207

Moment at point " 3 "

Description	Load t / m'	span m	Influence Line (I.L) Moment t.m	Influence Line (I.L) Area t.m2	Moment M 3 t.m
by self weight of beam	3.705	31.00	3.182	49.32	182.736
by dead load	4.641	31.00	3.182	49.32	228.911
by super imposed	4.319	31.00	3.182	49.32	213.005

Moment at point " 4 "

Description	Load t / m'	span m	Influence Line (I.L) Moment t.m	Influence Line (I.L) Area t.m2	Moment M 4 t.m
by self weight of beam	3.705	31.00	4.057	62.88	232.986
by dead load	4.641	31.00	4.057	62.88	291.858
by super imposed	4.319	31.00	4.057	62.88	271.578

Moment at point " 5 "

Description	Load t / m'	span m	Influence Line (I.L) Moment t.m	Influence Line (I.L) Area t.m2	Moment M 5 t.m
by self weight of beam	3.705	31.00	4.839	75.00	277.895
by dead load	4.641	31.00	4.839	75.00	348.114
by super imposed	4.319	31.00	4.839	75.00	323.926

Moment at point " 6 "

Description	Load t / m'	span m	Influence Line (I.L) Moment t.m	Influence Line (I.L) Area t.m2	Moment M 6 t.m
by self weight of beam	3.705	31.00	5.528	85.68	317.463
by dead load	4.641	31.00	5.528	85.68	397.680
by super imposed	4.319	31.00	5.528	85.68	370.048

Moment at point " 7"

Description	Load t / m'	span m	Influence Line (I.L) Moment t.m	Influence Line (I.L) Area t.m2	Moment M 7 t.m
by self weight of beam	3.705	31.00	6.124	94.92	351.690
by dead load	4.641	31.00	6.124	94.92	440.556
by super imposed	4.319	31.00	6.124	94.92	409.944

Moment at point " 8 "

Description	Load t / m'	span m	Influence Line (I.L) Moment t.m	Influence Line (I.L) Area t.m2	Moment M 8 t.m
by self weight of beam	3.705	31.00	6.627	102.72	380.576
by dead load	4.641	31.00	6.627	102.72	476.741
by super imposed	4.319	31.00	6.627	102.72	443.616

mom-dl

Moment at point " 9 "

Description	Load t / m'	span m	Influence Line (I.L) Moment t.m	Influence Line (I.L) Area t.m2	Moment M 9 t.m
by self weight of beam	3.705	31.00	7.037	109.07	404.122
by dead load	4.641	31.00	7.037	109.07	506.237
by super imposed	4.319	31.00	7.037	109.07	471.061

Moment at point " 10 "

Description	Load t / m'	span m	Influence Line (I.L) Moment t.m	Influence Line (I.L) Area t.m2	Moment M 10 t.m
by self weight of beam	3.705	31.00	7.355	114.00	422.384
by dead load	4.641	31.00	7.355	114.00	529.113
by super imposed	4.319	31.00	7.355	114.00	492.348

Moment at point " 11 "

Description	Load t / m'	span m	Influence Line (I.L) Moment t.m	Influence Line (I.L) Area t.m2	Moment M 11 t.m
by self weight of beam	3.705	31.00	7.579	117.47	435.248
by dead load	4.641	31.00	7.579	117.47	545.228
by super imposed	4.319	31.00	7.579	117.47	507.343

Moment at point " 12 "

Description	Load t / m'	span m	Influence Line (I.L) Moment t.m	Influence Line (I.L) Area t.m2	Moment M 12 t.m
by self weight of beam	3.705	31.00	7.711	119.52	442.828
by dead load	4.641	31.00	7.711	119.52	554.724
by super imposed	4.319	31.00	7.711	119.52	516.179

Moment at point " 13 "

Description	Load t / m'	span m	Influence Line (I.L) Moment t.m	Influence Line (I.L) Area t.m2	Moment M 13 t.m
by self weight of beam	3.705	31.00	7.750	120.13	445.068
by dead load	4.641	31.00	7.750	120.13	557.529
by super imposed	4.319	31.00	7.750	120.13	518.790

Total moment by

Point	Weight of beam t.m	Dead load t.m	Super imposed t.m	Live load t.m	Composite t.m
1	66.272	83.018	77.249	165.089	242.34
2	127.146	159.273	148.207	315.778	463.98
3	182.736	228.911	213.005	452.067	665.07
4	232.986	291.858	271.578	573.956	845.53
5	277.895	348.114	323.926	681.445	1,005.37
6	317.463	397.680	370.048	774.534	1,144.58
7	351.690	440.556	409.944	853.223	1,263.17
8	380.576	476.741	443.616	917.512	1,361.13
9	404.122	506.237	471.061	967.401	1,438.46
10	422.384	529.113	492.348	1,002.890	1,495.24
11	435.248	545.228	507.343	1,023.979	1,531.32
12	442.828	554.724	516.179	1,045.068	1,561.25
13	445.068	557.529	518.790	1,051.757	1,570.55

Moment per beam — nos. of beam = 3.00

Point	Weight of beam t.m	Dead load t.m	Super imposed t.m	Live load t.m	Composite t.m
1	22.091	27.673	25.750	55.030	80.78
2	42.382	53.091	49.402	105.259	154.66
3	60.912	76.304	71.002	150.689	221.69
4	77.662	97.286	90.526	191.319	281.84
5	92.632	116.038	107.975	227.148	335.12
6	105.821	132.560	123.349	258.178	381.53
7	117.230	146.852	136.648	284.408	421.06
8	126.859	158.914	147.872	305.837	453.71
9	134.707	168.746	157.020	322.467	479.49
10	140.795	176.371	164.116	334.297	498.41
11	145.083	181.743	169.114	341.326	510.44
12	147.609	184.908	172.060	348.356	520.42
13	148.356	185.843	172.930	350.586	523.52

mom-dl

Project	: Medan Flood Control	Japan International Cooperation Agency (JICA)	Calculation sheet
Channel	: Medan Flood Way		Date
Structure	: Br – F4		Nos of sheet
Station	: Fw 30 + 80		Prepared by

I.2.8 Load due to Wind Pressure

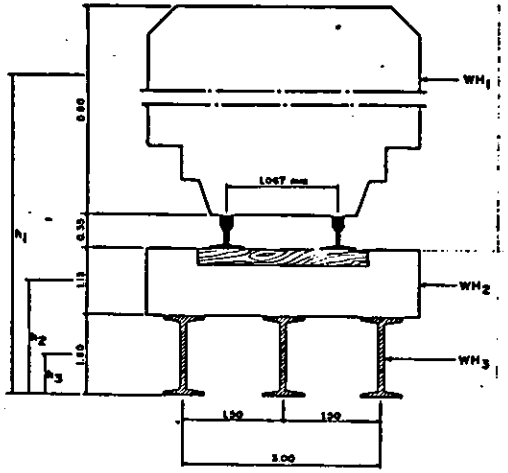

span = 31.60 m
clear span = 31.00 m
Wind pressure = W = 100.0 kg / m2

hw1	=	3.60 m	h1	=	4.88 m
hw2	=	1.13 m	h2	=	2.17 m
hw3	=	1.60 m	h3	=	0.80 m
width	=	3.00 m			

Load

W1	=	W	x	hw1		
	=	100.0	x	3.60	=	360.00 kg
W2	=	W	x	hw2		
	=	100.0	x	1.13	=	113.00 kg
W3	=	W	x	hw3		
	=	100.0	x	1.60	=	160.00 kg

Moment by wind pressure

Mh1	=	W	x	h1			
	=	360.00	x	4.88	=	1,756.80	kg.m
Mh2	=	W	x	h2			
	=	113.00	x	2.17	=	244.64	kg.m
Mh3	=	W	x	h3			
	=	160.00	x	0.80	=	128.00	kg.m
Mh1 + Mh2 + Mh3 = Mh tot.					=	2,129.445	kg.m

Moment by wind pressure reaction

Mv = Mh tot.
W v x width = 2,129.45 kg.m
W v x 3.00 = 2,129.45 kg.m
W v = 709.82 kg / m
= 0.70982 ton / m

Bending moment due to wind pressure

Description	Load	span	Influence Line (t.L)		Moment
			Moment	Area	M 1
	t / m'	m	t.m	t.m2	t.m
Moment at point * 1	0.710	31.00	1.154	17.89	12.696
Moment at point * 2	0.710	31.00	2.214	34.32	24.359
Moment at point * 3	0.710	31.00	3.183	49.32	35.009
Moment at point * 4	0.710	31.00	4.057	62.88	44.636
Moment at point * 5	0.710	31.00	4.839	75.00	53.239
Moment at point * 6	0.710	31.00	5.528	85.68	60.820
Moment at point * 7	0.710	31.00	6.124	94.92	67.377
Moment at point * 8	0.710	31.00	6.627	102.72	72.911
Moment at point * 9	0.710	31.00	7.037	109.07	77.422
Moment at point * 1	0.710	31.00	7.355	114.00	80.921
Moment at point * 1	0.710	31.00	7.579	117.47	83.385
Moment at point * 1	0.710	31.00	7.711	119.52	84.837
Moment at point * 1	0.710	31.00	7.750	120.13	85.267

win-lod

Project	: Medan Flood Control	Japan International Cooperation Agency (JICA)	Calculation sheet
Channel	: Medan Flood Way		Date
Structure	: Br – F4		Nos of sheet
Station	: Fw 30 + 80		Prepared by

I.2.9 Load due to break Force

$$Ra = \frac{(L-nX)}{L}$$

L = 31.00 m
X = 1.20 m

Load by Live load

l	X	Load	Break force
	m	ton	ton
0.00	1.20	0.00	0.00
1.00	1.20	12.00	1.20
2.00	1.20	12.00	1.20
3.00	1.20	12.00	1.20
4.00	1.20	12.00	1.20
5.00	1.20	12.00	1.20
6.00	1.20	12.00	1.20
7.00	1.20	12.00	1.20
8.00	1.20	12.00	1.20
9.00	1.20	12.00	1.20
10.00	1.20	12.00	1.20
11.00	1.20		
12.00	1.20	12.00	1.20
13.00	1.20	12.00	1.20
14.00	1.20	12.00	1.20
15.00	1.20	12.00	1.20
16.00	1.20		
17.00	1.20	12.00	1.20
18.00	1.20	12.00	1.20
19.00	1.20	12.00	1.20
20.00	1.20	12.00	1.20
21.00	1.20	12.00	1.20
22.00	1.20	12.00	1.20
23.00	1.20	12.00	1.20
24.00	1.20	12.00	1.20
25.00	1.20	12.00	1.20
26.00	1.00	12.00	1.20
	total load	288.00	26.80

Length of Abutment = 7.500 m
Break force per m' = 3.840 ton

Project : Medan Flood Control	Japan International Cooperation Agency (JICA)	Calculation sheet	
Channel : Medan Flood Way		Date	
Structure : Br – F4		Nos of sheet	
Station : Fw 30 + 60		Prepared by	

L2.10 Prestress Force and numbers of tendon

Working moment maximum due to :

self weight of beam	=	148.358	t.m
	=	14,835,600	t.m
dead load	=	185.843	t.m
	=	18,584,300	t.m
super imposed	=	172.930	t.m
live load	=	350.586	t.m
composite section	=	523.516	t.m
	=	52,351,600	t.m

Charateristic of Concrete

specified strength (fc)

Concrete class		K-400	
fti'	=	0	kg/cm2
fci'	=	190	kg/cm2
fcs'	=	180	kg/cm2
fts'	=	0	kg/cm2
1 Mpa	=	10.2	kg/cm2
1 kg/cm2	=	0.098	Mpa
1 kN	=	102	Kg
1 kg	=	0.0098	kN

Compression strength

Section properties

		Beam				Composite
h	=	160.00	cm	thick of slab	=	17.50 cm
A	=	4,774.00	cm2	thick of panel	=	7 cm
Yt	=	88.86	cm	h'	=	184.50 cm
Yb	=	71.14	cm	Ac'	=	8,449.00 cm2
I	=	14,611,103.00	cm4	Yt'	=	69.38 cm
Wt	=	164,424.00	cm3	Yb'	=	115.12 cm
Wb	=	205,391.00	cm3	I'	=	36,015,431 cm4
kt	=	43.02	cm	Wt'	=	519,099 cm3
kb	=	34.44	cm	Wb'	=	312,853 cm3
e	=	55.14	cm	kt'	=	37.00 cm3
				kb'	=	61.40 cm3
				n	=	0.75

Computation prestressing force

1. Initial case

1st equation top fiber

$$Pi > \frac{f'ti.Wt - Mg}{(kb - e)}$$ by self weight of beam

Mg	=	14,835,600	kg.cm			
f'ti	=	0.00	kg/cm2			
Wt	=	164,424.00	cm3			
f'ti.Wt	=	0.00	cm3			
kb	=	34.44	cm			
e	=	55.14	cm			
f'ti.Wt – M min	=	0.00	–	14,835,600	=	(14,835,600) kg.cm
kb – e	=	34.44	–	55.14	=	(20.70) cm
		(14,835,600)				
Pi	>	----------	=	716,696		
		(20.70)				
	>	716.70	ton			

2nd equation bottom fiber

$$Pi < \frac{f'ci.Wb + Mg}{(e + kt)}$$ by self weight of beam

Mg	=	14,835,600	kg.cm			
f'ci	=	190.00	kg.cm			
Wb	=	205,391.00	kg/cm2			
f'ci.Wb	=	39,024,290.00	cm3			
kt	=	43.02	cm3			
e	=	55.14	cm			
M min + f'ci.Wb	=	14,835,600	+	39,024,290	=	53,859,890 kg.cm
kt + e	=	43.02	+	55.14	=	98.16 cm
		53,859,890				
Pi	<	----------	=	548,695		
		98.16				
	<	548.69	ton			

2. After transfeer

1st equation top fibeTop fiber

$$Pi > \frac{f'ti.Wt - Mg}{n.(kb - e)}$$ after prestress losses

Mg	=	14,835,600	kg.cm			
f'ti	=	0.00	kg/cm2			
Wt	=	164,424.00	cm3			
f'ti.Wt	=	0.00	cm3			
kb	=	34.44	cm			
e	=	55.14	cm			
(kb – e)	=	34.44	–	55.14	=	(20.70) cm
f'ti.Wt – M min	=	0.00	–	14,835,600	=	(14,835,600) cm
n.(kb – e)	=	0.75	x	(20.70)	=	(15.53) cm
		(14,835,600)				
Pi	>	----------	=	955,594	kg	
		-15.525				
	>	955.59	ton			

2nd equation bottom fiber

$$Pi < \frac{f'ci.Wb + Mg}{n.(e + kt)}$$ after prestress losses

Mg	=	14,835,600	kg.cm			
f'ci	=	190.00	kg.cm			
Wb	=	205,391.00	kg/cm2			
f'ci.Wb	=	190	x	205,391.00	=	39,024,290 cm
kt	=	43.02		cm3		
e	=	55.14		cm		
(kt + e)	=	43.02	+	55.14	=	98.16 cm
f'ci.Wb + M trans.	=	39,024,290	+	14,835,600	=	53,859,890 cm
n.(kt + e)	=	0.75	x	98.16	=	73.62 cm
		53,859,890				
Pi	<	----------	=	731,593	kg	
		73.62				
	<	731.59	ton			

3. Dead load

1st equation top fiber

$$Pi > \frac{f'cs.Wt - M\,dl}{n.(kb - e)}$$ by beam and concrete insitu

M dl	=	18,584,300	kg.cm			
f'ti	=	0.00	kg/cm2			
Wt	=	164,424.00	cm3			
f'ti.Wt	=	0	x	164424	=	0.00 cm
kb	=	34.44	cm			
e	=	55.14	cm			
(kb – e)	=	34.44	–	55.14	=	(20.70) cm
f'ti.Wt – M dl	=	0	–	18,584,300	=	(18,584,300) kg.cm
n.(kb – e)	=	0.75	x	(20.70)	=	(15.53) cm

pres-p

Pi	>	(18,584,300) / (15.53)	=	1,197,058	kg		
	>	1,197.06	ton				

2nd equation bottom fiber

Pi	<	f'ts.Wb + M dl / n.(e + kt)	by beam and concrete insitu

M dl	=	18,584,300	kg.cm				
f'tl	=	0.00	kg.cm				
Wb	=	205,391.00	kg/cm2				
f'tl.Wb	=	0	x	205,391.00	=	0.00	cm
kt	=	43.02	cm				
e	=	55.14	cm				
(e + kt)	=	55.14	+	43.02	=	98.16	cm
f'tl.Wb + M dl	=	0	+	18,584,300	=	18,584,300	cm
n.(e + kt)	=	0.75	x	98.16	=	73.62	cm
Pi	<	18,584,300 / 73.62	=	252,435	kg		
	<	252.44	ton				

4. Service load

3 rd equation top fiber

Pi	<	f'cs.Wt − Mdl − Mc.Wt/Wt' / n.(kb − e)	by service load

Mc	=	52,351,600	kg.cm				
Mdl	=	14,835,600	kg.cm				
f'cs	=	180.00	kg/cm2				
Wt	=	164,424.00	cm3				
Wt'	=	519,099.00	cm3				
Wb	=	519,099.00	cm3				
kb	=	34.44	cm				
e	=	55.14	cm				
(kb − e)	=	34.44	−	55.14	=	(20.70)	cm
Wt/Wt'	=	164,424.00	:	519,099.00	=	0.32	
Mc.Wt / Wt'	=	52,351,600.00	x	0.32	=	16,582,307.96	kg.cm
f'cs.Wt	=	180.00	x	164,424.00	=	29,596,320.00	kg.cm
f'cs.Wt − Mdl	=	29,596,320.00	−	14,835,600.00	=	14,760,720.00	kg.cm
	=	14,760,720.00	−	16,582,307.96	=	(1,821,587.96)	kg.cm
n.(kb − e)	=	0.75	x	(20.70)	=	(15.53)	kg.cm
Pi	<	(1,821,587.96) / (15.53)	=	117,332.56			
	<	117.33					

4 th equation bottom fiber

Pi	>	f'ts.Wb + Mdl + Mc.Wb/Wb' / n.(e + kt)	by service load

Mc	=	52,351,600.00	kg.cm				
Mdl	=	14,835,600.00	kg.cm				
f'ts	=	0.00	kg/cm2				
Wt'	=	519,099.00	cm3				
Wb	=	205,391.00	cm3				
Wb'	=	312,853.00	cm3				
kt	=	43.02	cm				
e	=	55.14	cm				
(e + kt)	=	55.14	+	43.02	=	98.16	cm
Wb/Wb'	=	205,391	:	312,853	=	0.66	
Mc.Wb/Wb'	=	52351600	x	0.66	=	34,369,328.33	kg.cm
f'ts.Wb	=	0	x	205391	=	0	kg.cm

f'ts.Wb + Mdl	=	0	+	14835600	=	14835600 kg.cm
	=	14835600	+	34369328.329	=	49204928.32 kg.cm
n.(e + kt)	=	0.75	x	98.16	=	73.62 cm
Pi	>	49,204,928 / 73.62	=	668,364 kg		
	>	668.36	ton			

Initial case

Top fibre	Pi	>	716.70	ton
Bottom fibre	Pi	<	548.69	ton

Transfeer

Top fibre	Pi	>	955.59	ton
Bottom fibre	Pi	<	731.59	ton

Dead load

Top fibre	Pi	<	1,197.06	ton
Bottom fibre	Pi	>	252.44	ton

Service case

Top fibre	Pi	<	117.33	ton
Bottom fibre	Pi	>	668.36	ton

252.44 ton < Pi < 548.695 ton

Pi = 548,695 kg

used prestresing steel regular 12 wire strand

nominal diameter		=	12.5	mm	
nominal area		=	98.71	mm2	
		=	0.9871	cm2	
ultimate	fpu	=	18,972	kgf/cm2	
	Pu	=	18,972	x	0.9871
		=	18,727	kg	
at jacking	fpi = 0.75 x fpu	=	14,045	kgf/cm2	
	Pj	=	14,045	x	0.9871
		=	13,864	kg	
after transfer	fr = 0.6 x fpu	=	11,383	kgf/cm2	
	Pr	=	11,383	x	0.9871
		=	11,236	kg	
nos of strand / tendon		=	8.00 ✓		
at jacking Pj		=	14,045	x	8
		=	112,364	kg / tendon	
nos of tendon		=	total force	:	Pj
		=	548,695	:	112,364
		=	4.88		
say		=	6.00	nos	

Project : Medan Flood Control	Japan International Cooperation Agency (JICA)	Calculation sheet
Channel : Medan Flood Way		Date
Structure : Br – F 4		Nos of sheet
Station : Fw 30 + 80		Prepared by

I.2.11 Centre Gravity of tendon

for span = 31.00 m

Y = centre gravity of tendon (cgs) to the centre gravity of concrete (cgc)

dia.of strand	=	12.70 mm
depth	=	160.00 cm
area	=	98.71 mm2
	=	0.9871 cm2
nos of strand	=	8.00
area of a tendon	=	7.8968 cm2
Yb	=	71.14 cm
Yt	=	88.86 cm
top cover concrete	=	tc
tc	=	20.00 cm

a. at tressing of tendon

cgs tendon at tressing tendon no.5 at edge of span

tendon no		distance to each	tendon no	distance to cgc	area of tendon As		static moment Y		As.Y
		cm		cm	cm2		cm		cm3
No.6 to No.5	=	30.00	No.6	68.86	7.8968	x	68.86	=	543.77
No.5 to No.4	=	30.00	No.5	38.86	7.8968	x	38.86	=	306.87
No.4 to cgc	=	8.86	No.4	8.86	7.8968	x	8.86	=	69.97
		68.86			23.69				920.61

e at edge = 920.61 / 23.690 = 38.86 cm

cgs tendon at stressing tendon no.5 at middle of span

Strand no		distance to each	Strand no	distance to outside	area of strand As		static moment Y		As.Y
		cm		cm	cm2		cm		cm3
No.6 to No.5	=	13.50	No.6	47.80	7.8968	x	47.80	=	377.47
No.5 to No.4	=	13.50	No.5	34.30	7.8968	x	34.30	=	270.86
No.4 to outside	=	20.80	No.4	20.80	7.8968	x	20.80	=	164.25
		47.80			23.690				812.58

Ys = 812.58 / 23.690 = 34.30 cm

Y jack at midle = Yb – Ys = 71.14 – 34.30 = 36.84 cm

b. at tranfsfer

cgs tendon at edge of span

Strand no		distance to each	Strand no	distance to outside	area of strand As		static moment Y		As.Y
		cm		cm	cm2		cm		cm3
No.6 to No.5	=	30.00	No.6	140.00	0.9871	x	140.00	=	138.19
No.5 to No.4	=	30.00	No.5	110.00	0.9871	x	110.00	=	108.58
No.4 to No.3	=	30.00	No.4	80.00	0.9871	x	80.00	=	78.97
No.3 to No.2	=	30.00	No.3	50.00	0.9871	x	50.00	=	49.36
No.2.1 to out side	=	20.00	No.2	20.00	0.9871	x	20.00	=	19.74
			No.1	20.00	0.9871	x	20.00	=	19.74
		140.00			5.923				414.58

Ys = 414.58 / 5.923 = 70.00 cm

Eccentrisites cable = Yb – Ys = 71.14 – 70.00 = 1.14 cm

cgs tendon at middle of span

Strand no		distance to each	Strand no	distance to outside	area of strand As		static moment Y		As.Y
		cm		cm	cm2		cm		cm3
No.6 to No.5	=	13.50	No.6	47.80	0.9871	x	47.80	=	47.18
No.5 to No.4	=	13.50	No.5	34.30	0.9871	x	34.30	=	33.86
No.4 to No.3	=	12.10	No.4	20.80	0.9871	x	20.80	=	20.53
No.3 to No.2	=	2.50	No.3	8.70	0.9871	x	8.70	=	8.59
No.2.1 to out side	=	6.20	No.2	6.20	0.9871	x	6.20	=	6.12
			No.1	6.20	0.9871	x	6.20	=	6.12
		47.80			5.923				122.40

Ys = 122.40 / 5.923 = 20.67 cm

Eccentrisites cable = Yb – Ys = 71.14 – 20.67 = 50.47 cm

Project : Medan Flood Control Channel : Medan Flood Way Structure : Br – F4 Station : Fw 30 + 80	Japan International Cooperation Agency (JICA)	Calculation sheet Date Nos of sheet Prepared by

1.2.12 Prestresing loss

1. Due to elastic shortening

l	=	31.00	m
section properties			
Ht	=	160.00	cm
Ac	=	4,773.75	cm2
Ic	=	14,611,103	cm4
Wt	=	164,425	cm3
Wb	=	205,391	cm3
e	=	50.47	cm
Yb	=	71.14	cm
Yt	=	88.86	cm
1 kN	=	102	kg
1 Mpa	=	10.2	kg/cm2

Concret class K – 400

(fc')	=	400	kg/cm2
	=	39.22	Mpa
Ec	=	343,327	kg/cm2
Es	=	1,897,200	kg/cm2

Breaking load ultimate	=	184	kN
Number strand / tendon	=	7.00	nos
Area of strand	=	98.71	mm2
Total area	=	0.987	cm2

modular ratio n = Es / Ec = 1,897,200 / 343,327

= 5.53

stress at ultimate = fpu	=	1,860	Mpa
	=	18,972	kg/cm2
stress at breaking = fbk	=	15,178	kg/cm2
breaking load	=	18,727	kg/strand
stress at jacking = fj	=	0.8 x Pu	
	=	0.8 x 18,972	
	=	15,178	kg/cm2
Jacking force = Pj	=	15,178 x 0.987	
	=	14,982	kg/strand
nos of strands / tendon	=	8.00	
	=	8.00 x 14,982	
Pj	=	119,854	kg / tendon
nos of tendon	=	6.00	
total force at jacking Pj	=	Pj x nos of tendon	
	=	119,854 x 6	
	=	719,127	kg

p-los

at the jacking

tandon no	Yb cm	Y steel cm	e steel cm	Pj kg	Ac cm2	Pj/Ac kg/cm2	(e.Ac/Wb) kg.cm	(1+e.Ac/Wb) kg/cm2
6	71.14	47.80	23.34	119,854	4773.75	25.11	0.5425	1.54
5	71.14	34.30	36.84	119,854	4773.75	25.11	0.8562	1.86
4	71.14	20.80	50.34	119,854	4773.75	25.11	1.1700	2.17
3	71.14	8.70	62.44	119,854	4773.75	25.11	1.4512	2.45
2	71.14	6.20	64.94	119,854	4773.75	25.11	1.5094	2.51
1	71.14	3.70	67.44	119,854	4773.75	25.11	1.5675	2.57

tandon no	fcj kg/cm2	n	n.fcj cm	fj kg/cm2	Stress lossess n.fcj / fj x 100
6	38.73	5.53	214.00	15,178	1.41
5	46.60	5.53	257.53	15,178	1.70
4	54.48	5.53	301.07	15,178	1.98
3	61.54	5.53	340.08	15,178	2.24
2	63.00	5.53	348.15	15,178	2.29
1	64.46	5.53	356.21	15,178	0.00 final stressing stress lossess is zero
				sum	9.6249

average = 9.6249 : 6 = 1.6042 %

2. Due to friction

fx	=	fj x e^(–(ua + Ks))
	=	stress in the strand at the jacking end or at the anchord
fj	=	stress at initial jacking
u	=	coefficient of angular friction
alpha	=	change in the angle between the force at anchorage to section X
x	=	curvilinar length of the tandon anchorage to sextion x
f	=	depth of parabola

tendon parabola curve

Y = 4 x f/l^2 x (l–x)

angle of tendon parabolic to horizontal line

dx/dy = 0

x	=	0.00	m
e	=	0.5047	m
l	=	31.00	m
alpha 1	=	4 x f / l	radial
	=	4.00	
alpha 1	=	--- x 0.5047	
		31.00	
	=	0.0651	radial
alpha	=	2.00 x alpha 1	
	=	2.00 x 0.0651	
	=	0.1302	

436.2

no.tendon	value of sag parabola each tandon								
	f	=	Ht	– distance tendon top fiber	–	Y steel			
6	f	=	1.600	– 0.200	–	0.4780	=	0.922	m
5	f	=	1.600	– 0.500	–	0.3430	=	0.757	m
4	f	=	1.600	– 0.800	–	0.2080	=	0.592	m
3	f	=	1.600	– 1.100	–	0.0870	=	0.413	m
2	f	=	1.600	– 1.400	–	0.0620	=	0.138	m
1	f	=	1.600	– 1.400	–	(0.0000)	=	0.200	m

p-los

no.tendon		value of depth parabola each tandon						
6	alpha 1	=	4.00	x	0.922	:	31.00 = 0.11897	radial
5	alpha 1	=	4.00	x	0.757	:	31.00 = 0.09768	radial
4	alpha 1	=	4.00	x	0.592	:	31.00 = 0.07639	radial
3	alpha 1	=	4.00	x	0.413	:	31.00 = 0.05329	radial
2	alpha 1	=	4.00	x	0.14	:	31.00 = 0.01781	radial
1	alpha 1	=	4.00	x	0.20	:	31.00 = 0.02581	radial

if x = 0, alpa = alpha 1

if x = l/2, alpa = 2 x alpha 1

value of Px each tendon

describtion	tandon – 6		tandon – 5			
	x (m)		x (m)		x m	
	0.000	15.50	0.000	15.50	0.000	15.50
alpha	0.0651	0.1302	0.0977	0.1954	0.0764	0.1528
u	0.2000	0.2000	0.2000	0.2000	0.2000	0.2000
u.alhpa	0.0130	0.0260	0.0195	0.0391	0.0153	0.0306
K	0.0041	0.0041	0.0041	0.0041	0.0041	0.0041
K.x	0.0000	0.0636	0.0000	0.0636	0.0000	0.0636
u.alpha + K.X	0.0130	0.0896	0.0195	0.1026	0.0153	0.0941
e	2.7183	2.7183	2.7183	2.7183	2.7183	2.7183
e ^ – (u.alpha + K.X)	0.9871	0.9143	0.9807	0.9025	0.9848	0.9102
fx	0.9871	0.9143	0.9807	0.9025	0.9848	0.9102

X	tandon – 3		tandon – 2			
	0.000	15.50	0.000	15.50	0.000	15.50
alpha	0.0533	0.1066	0.1380	0.2760	0.2000	0.4000
u	0.2000	0.2000	0.2000	0.2000	0.2000	0.2000
u.alhpa	0.0107	0.0213	0.0276	0.0552	0.0400	0.0800
K	0.0041	0.0041	0.0041	0.0041	0.0041	0.0041
K.x	0.0000	0.0636	0.0000	0.0636	0.0000	0.0636
u.alpha + K.X	0.0107	0.0849	0.0276	0.1188	0.0400	0.1436
e	2.7183	2.7183	2.7183	2.7183	2.7183	2.7183
e ^ – (u.alpha + K.X)	0.9894	0.9186	0.9728	0.8880	0.9608	0.8663
fx	0.9894	0.9186	0.9728	0.8880	0.9608	0.8663

tandon no.	X = 0 fx	X = l/2 fx
6	0.987	0.914
5	0.981	0.902
4	0.985	0.910
3	0.989	0.919
2	0.973	0.888
1	0.961	0.866
sum	5.876	5.400

$$\text{average} = \frac{5.876}{6} \quad \frac{5.400}{6} = 0.979 \quad 0.900$$

$$\text{average of fx} = \frac{0.979 + 0.900}{2.00} = 0.9396\ \%$$

fx = (1 – 0.939617) x fj

= 0.060 fj

= 6.036 % fj

p-los

3. Due to anchorage set

stress losses = delta / l x Es

Es = 1,897,200 kg/cm2

assumed slip = 0.5 cm

$$\text{stress} = \frac{\text{delta}}{l} \times Es = \frac{0.50}{3,100} \times 1,897,200$$

= 306 kg/cm2

$$\text{stress losses} = \frac{306}{15,178} \times 100$$

= 2.016 %

total stress loss = 1.604 + 6.038 + 2.016

= 9.66 %

Initial stress / tendon = (1.00 – 0.0966)x P jacking / tendon

Pj = 0.903 x 119,854

= 108,278 kg

initial force after prestress loss = initial stress x nos strand

= 108,278 x 6.00

Pi = 649,670 kg

Pj = 719,127 kg

p-los

Project : Medan Flood Control	Japan International Cooperation Agency (JICA)	Calculation sheet	
Channel : Medan Flood Way		Date	
Structure : Br – F4		Nos of sheet	
Station : Fw 30 + 80		Prepared by	

1.2.13 Stress Control

Working moment

M minimum	=	148.356	t.m
	=	14,835,600	kg.cm
M after transfeer	=	148.356	t.m
	=	14,835,600	kg.cm
M dead load	=	185.843	t.m
	=	18,584,300	kg.cm
M composite	=	523.518	t.m
	=	52,351,600	kg.cm
f'ci	=	190	kg/cm2
f'ti	=	0	kg/cm2
f'cs	=	180	kg/cm2
f'ts	=	0	kg/cm2

Section properties

Girder				Composite			
				Thick of slab	=	17.50	cm
				Thick of panel	=	7.00	cm
h	=	160.00	cm	h'	=	184.50	cm
Ac	=	4,774.00	cm2	Ac'	=	8,449.00	cm2
Yt	=	88.86	cm	Yt'	=	69.38	cm
Yb	=	71.14	cm	Yb'	=	115.12	cm
I	=	14,611,103	cm4	I'	=	36,015,431	cm4
Wt	=	164,425.00	cm3	Wt'	=	519,099.00	cm3
Wb	=	205,391.00	cm3	Wb'	=	312,853.00	cm3
kt	=	43.02	cm	kt'	=	37.00	cm
kb	=	34.44	cm	kb'	=	61.40	cm
e	=	50.47	cm	n	=	0.75	cm

Computation of sresses

Force at jacking	=	Pja		
Pjack	=	14,982	kg/strand	
Nos of strand	=	8.00		
Pjack	=	119,856	kg/tendon	
nos.of tendon	=	6.00		
Pjack	=	119,856	x	6.00
	=	719,136	kg	
Pi	=	649,670	kg	
P	=	n	x	Pi
	=	0.75	x	649,670
	=	487,253	kg	

Moment by eccentricity tendon

Initial case

Pj x e	=	719,136	x	36.84
	=	26,492,970	kg.cm	

Transfeer

Pi x e	=	649,670	x	50.47
	=	32,788,845	kg.cm	

stress

Final case

$$P \times e = 487{,}253 \times 50.47 = 24{,}591{,}634 \text{ kg.cm}$$

Actualy working stresses

1. Initial case

top fibre

$$fti = \frac{Pj}{Ac} - \frac{Pj \times e}{Wt} + \frac{Mg}{Wt} > 0.00 \text{ kg/cm2}$$

$$= \frac{719{,}136}{4{,}774} - \frac{26{,}492{,}970}{164{,}425} + \frac{14{,}835{,}600}{164{,}425} > 0.00 \text{ kg/cm2}$$

$$= 150.64 - 161.12 + 90.23 > 0.00 \text{ kg/cm2}$$

$$= 79.74 \text{ kg/cm2} > 0 \text{ kg/cm2}$$

bottom fibre

$$fbi = \frac{Pj}{Ac} + \frac{Pj \times e}{Wb} - \frac{Mg}{Wb} < 190 \text{ kg/cm2}$$

$$= \frac{719{,}136}{4{,}774} + \frac{26{,}492{,}970}{205{,}391} - \frac{14{,}835{,}600}{205{,}391} < 190 \text{ kg/cm2}$$

$$= 150.64 + 128.99 - 72.23 < 190 \text{ kg/cm2}$$

$$= 207.39 < 190 \text{ kg/cm2}$$

2. after transfer case

top fibre

$$ft = \frac{Pi}{Ac} - \frac{Pi.e}{Wt} + \frac{Mtr}{Wt} > 0 \text{ kg/cm2}$$

$$= \frac{649{,}670}{4{,}774} - \frac{32{,}788{,}845}{164{,}425} + \frac{14{,}835{,}600}{164{,}425} > 0 \text{ kg/cm2}$$

$$= 136.09 - 199.42 + 90.23 > 0 \text{ kg/cm2}$$

$$= 26.90 > 0 \text{ kg/cm2}$$

bottom fibre

$$fb = \frac{Pi}{Ac} + \frac{Pi.e}{Wb} - \frac{M\,tr}{Wb} < 180 \text{ kg/cm2}$$

$$= \frac{649{,}670}{4{,}774} + \frac{32{,}788{,}845}{205{,}391} - \frac{14{,}835{,}600}{205{,}391} < 180 \text{ kg/cm2}$$

$$= 136.09 + 159.64 - 72.23 < 180 \text{ kg/cm2}$$

$$= 223.50 < 180.00 \text{ kg/cm2}$$

3. Dead load (self weigth beam + concrete cast in place)

top fibre

$$ft = \frac{P}{Ac} - \frac{P.e}{Wt} + \frac{Mdl}{Wt} > 0 \text{ kg/cm2}$$

stress

$$= \frac{487.253}{4.774} - \frac{24,591.634}{164.425} + \frac{18,584.300}{164.425} > 0 \text{ kg/cm2}$$

$$= 102.06 - 149.56 + 113.03 > 0 \text{ kg/cm2}$$

$$= 65.53 > 0.00 \text{ kg/cm2}$$

bottom fibre

$$fb = \frac{P}{Ac} + \frac{P.e}{Wb} - \frac{Mdl}{Wb} < 180 \text{ kg/cm2}$$

$$= \frac{487.253}{4.774} + \frac{32,788.845}{205.391} - \frac{18,584.300}{205.391} < 180 \text{ kg/cm2}$$

$$= 102.06 + 159.64 - 90.48 < 180 \text{ kg/cm2}$$

$$= 171.22 < 180 \text{ kg/cm2}$$

4. at srvice load
beam unshore
top fibre

$$ft\,aa = \frac{M\ composite}{Wt'}$$

Yt' = depth of faa = 69.38 cm
hs = depth of slab = 22 cm
Yt = Yt' − hs = 47.38 cm

$$= \frac{52,352.000}{519.099}$$

$$= 100.85 < 180.00 \text{ kg/cm2 on top of slab deck}$$

faa : fa = Yt' : Yt
fa x Yt' = faa x Yt
fa = faa x Yt/Yt'

$$fa = \frac{47.38}{69.38} \times 100.85$$

$$= 68.87 < 180 \text{ kg/cm2 (on bottom of slab deck)}$$

total fa = concrete compressive on top of girder
total fa = fa dl + fa composite < 180 kg/cm2

total fa = 65.53 + 68.87 = 134.40 kg/cm2 < 180 kg/cm2

bottom fibre

fbc = concrete compressive on bottom of girder in composite

$$fbc = \frac{M\ composite}{Wb'}$$

$$= \frac{52,352.000}{312.853}$$

$$= 167.34 \text{ kg/cm2}$$

fb = fb dl − fb c > 0 kg/cm2
= 171.22 − 167.34 = 3.88 kg/cm2 > 0 kg/cm2

5. at wind load
beam unshore
top fibre

$$ft\,aa = \frac{M\ wind}{Wt'}$$

Yt' = depth of faa = 69.38 cm
hs = depth of slab = 22 cm
Yt = Yt' − hs = 47.38 cm

$$= \frac{8,526.700}{519.099}$$

$$= 16.43 < 0.00 \text{ kg/cm2 on top of slab deck}$$

faa : fa = Yt' : Yt
fa x Yt' = faa x Yt
fa = faa x Yt/Yt'

$$fa = \frac{47.38}{69.38} \times 16.43$$

$$= 11.22 < 0 \text{ kg/cm2 (on bottom of slab deck)}$$

total fa = concrete compressive on top of girder
= fa dl + fa composote < 180 kg/cm2

total fa = 65.53 + 11.22 = 76.75 kg/cm2 < 180 kg/cm2

bottom fibre

fbc = concrete compressive on bottom of girder in composite

$$fbc = \frac{M\ wind}{Wb'}$$

$$= \frac{8,526.700}{312.853}$$

$$= 27.25 \text{ kg/cm2}$$

fb = fb dl − fb c > 0 kg/cm2
= 171.22 − 27.25 = 143.97 kg/cm2 > 0 kg/cm2

Total stress due service load and wind load

fiber	due to service load kg / cm2	due to wind load kg / cm2	total kg / cm2		Allowabible stress kg / cm2
	top fiber				
ft aa	100.85	16.43	117.28	<	180 kg / cm2
f a	68.87	11.22	80.09	<	180 kg / cm2
total fa	134.40	76.75	211.15	>	180 kg / cm2
	bottom fiber				
fbc	167.34	27.25	194.59	<	180 kg / cm2
fb	3.88	143.97	147.85	<	180 kg / cm2

Project	: Medan Flood Control	Japan International Cooperation Agency (JICA)	Calculation sheet	
Channel	: Medan Flood Way		Date	
Structure	: Br – F4		Nos of sheet	
Station	: Fw 30 + 80		Prepared by	

I.2.14 Layout of tendon

Total moment at each point

	point nos.						
	2	4	6	8	10	12	13
describtion	distance (m)						
	2.40	4.80	7.20	9.60	12.00	14.40	15.60
by beam	42.382	77.662	105.821	126.859	140.795	147.609	148.356
dead load	53.091	97.266	132.560	158.914	176.371	184.908	185.843
super imposed	49.402	90.526	123.349	147.872	164.116	172.060	172.930
live load	105.259	191.319	258.178	305.837	334.297	348.356	350.586
composite	154.661	281.845	381.527	453.709	498.413	520.416	523.516

Pj	=	719,127	kg	
Pi	=	649,670	kg	
n	=	0.75		
P	=	0.75	x	649,670
	=	487,253	kg	

	Prestessing force (kg)	
case	Pia	P=n.Pj
Initial case	719,127	
After transfer	649,670	
Deal load	487,253	
Live load	\	487,253
Composite		487,253

Arm = Moment / Force

Initial case								
Distance	m	2.40	4.80	7.20	9.60	12.00	14.40	15.60
Mg	t.m	42.38	77.66	105.82	126.86	140.80	147.61	148.36
	kg.cm	4,238,200	7,766,200	10,582,100	12,685,900	14,079,500	14,760,900	14,835,600
Prestressec	kg	719,127	719,127	719,127	719,127	719,127	719,127	719,127
arm	cm	5.89	10.80	14.72	17.64	19.58	20.53	20.63
After transfer								
Distance	m	2.40	4.80	7.20	9.60	12.00	14.40	15.60
M transfer	t.m	42.38	77.66	105.82	126.86	140.80	147.61	148.36
	kg.cm	4,238,200	7,766,200	10,582,100	12,685,900	14,079,500	14,760,900	14,835,600
Prestressec	kg	649,670	649,670	649,670	649,670	649,670	649,670	649,670
Arm	cm	6.52	11.95	16.29	19.53	21.67	22.72	22.84
Dead load								
Distance	m	2.40	4.80	7.20	9.60	12.00	14.40	15.60
M dead loa	t.m	53.09	97.29	132.56	158.91	176.37	184.91	185.84
	kg.cm	5,309,100	9,728,600	13,256,000	15,891,400	17,637,100	18,490,800	18,584,300
Prestressec	kg	487,253	487,253	487,253	487,253	487,253	487,253	487,253
Arm	cm	10.90	19.97	27.21	32.61	36.20	37.95	38.14
Composite load								
Distance	m	2.40	4.80	7.20	9.60	12.00	14.40	15.60
M compisit	t.m	154.66	281.84	381.53	453.71	498.41	520.42	523.52
	kg.cm	15,466,100	28,184,500	38,152,700	45,370,900	49,841,300	52,041,600	52,351,600
Prestressec	kg	487,253	487,253	487,253	487,253	487,253	487,253	487,253
Arm	cm	31.74	57.84	78.30	93.12	102.29	106.81	107.44

lay-out

Project	: Medan Flood Control	Japan International Cooperation Agency (JICA)	Calculation sheet	
Channel	: Medan Flood Way		Date	
Structure	: Br – F4		Nos of sheet	
Station	: Fw 30 + 80		Prepared by	

I.2.15 Shear force and tensile

$$Ra = \frac{(L-nX)}{L}$$

L = 31.00 m

X = 1.20 m

Reaction by Live load

I	X	n.X	L–nX	I.L Ra	Load	Reaction
0.00	1.20	0.00	31.00	1.00	12.00	12.00
1.00	1.20	1.20	29.80	0.96	12.00	11.54
2.00	1.20	2.40	28.60	0.92	12.00	11.07
3.00	1.20	3.60	27.40	0.88	12.00	10.61
4.00	1.20	4.80	26.20	0.85	12.00	10.14
5.00	1.20	6.00	25.00	0.81	12.00	9.68
6.00	1.20	7.20	23.80	0.77	12.00	9.21
7.00	1.20	8.40	22.60	0.73	12.00	8.75
8.00	1.20	9.60	21.40	0.69	12.00	8.28
9.00	1.20	10.80	20.20	0.65	12.00	7.82
10.00	1.20	12.00	19.00	0.61		
11.00	1.20	13.20	17.80	0.57	12.00	6.89
12.00	1.20	14.40	16.60	0.54	12.00	6.43
13.00	1.20	15.60	15.40	0.50	12.00	5.96
14.00	1.20	16.80	14.20	0.46	12.00	5.50
15.00	1.20	18.00	13.00	0.42		
16.00	1.20	19.20	11.80	0.38	12.00	4.57
17.00	1.20	20.40	10.60	0.34	12.00	4.10
18.00	1.20	21.60	9.40	0.30	12.00	3.64
19.00	1.20	22.80	8.20	0.26	12.00	3.17
20.00	1.20	24.00	7.00	0.23	12.00	2.71
21.00	1.20	25.20	5.80	0.19	12.00	2.25
22.00	1.20	26.40	4.60	0.15	12.00	1.78
23.00	1.20	27.60	3.40	0.11	12.00	1.32
24.00	1.20	28.80	2.20	0.07	12.00	0.85
25.00	1.20	30.00	1.00	0.03	12.00	0.39
26.00	1.00	31.00	0.00	0.00	12.00	0.00
					total load	148.65

Dead load

Beam	=	3.705	t/m'
slab	=	3.075	t/m'
asphalt	=	0.158	t/m'
Ballast	=	2.835	t/m'
Cross Beam	=	0.171	t/m'
Sand	=	0.945	t/m'
Concrete co.	=	1.453	t/m'
Sleeper	=	0.281	t/m'
Rail steel	=	0.100	t/m'
g tot.	=	12.723	t/m'

Reaction by Dead Load

$$Ra = \frac{1}{2} \times L \times g\,tot.$$

$$= \frac{1.00}{2.00} \times 31.00 \times 12.72$$

= 197.207 ton

shear

Total reaction = Ra ll + Ra dl
= 148.645 + 197.207
= 345.85 ton
nos.of beam = 3.00
Reaction per beam = 115.28 ton
V = 115.28 ton
= 115,283.89 kg

Part I (1)	Depth t (2)	Width w (3)	Area Al (4)	Distance to top = Yl (5)	Al.Yl (6)
	depth of section		88.86		
1	12.50	55.00	687.50	6.25	4,296.88
2	88.86	18.00	1,599.48	44.43	71,064.90
4	7.50	18.50	138.75	15.00	2,081.25
		sum	2,425.73		77,443.02

$$Y = \frac{Sy}{totAy} = \frac{77,443.02}{2,425.73}$$

= 31.93 cm

Ay.y = 2,425.73 x 31.93
= 77,443 cm2
b.I = 18.00 x 14,611,103
= 262,999,854 cm5
e = 50.47 cm
4 x e = 4.00 x 50.47
= 201.88 cm
= 2.02 m

P initial = 649,670 kg
n = 0.75
P = 487,253 kg

$$Vt = \frac{4 \times e}{I} \times P = \frac{2.0188}{31.00} \times 487,253$$

= 31,731.14 kg

V net = V − Vt
= 115,283.89 − 31,731.14
= 83,552.75 kg

vc = the shear resistance on the condrete
Ay = area of the portion of section outside the shear plane
outside the shear plane considearated
y = distance from neutral axis to centroid os Ay
by = width,of sention at level y of the shear plane considered
I = moment of inersia of the cross section

$$\text{shear stress} = \frac{Ay.y}{b.I} \times V\,net = \frac{77,443.02}{262,999,854} \times 83,553$$

vc = 24.60 kg/cm2

vc^2 = 605.31 kg/cm2
axial force = fx

$$fx = \frac{P}{Ac} = \frac{487,252.50}{2,426}$$

= 200.87 kg/cm2

$$fx/2 = \frac{200.87}{2.00} = 100.43 \text{ kg/cm2}$$

(fx/2)^2 = 10,087.03
vc^2 = 24.60
(fx/2)^2 = 10,087.03
vc^2 + (fx/ = 10,111.63

R = @sqrt (vc^2 + (fx/2) ^2)
= 100.56
Prinsiple compressive force = f

f1 = +/− fx/2 + R
f1 max = 100.43 + 100.56
= 200.99 kg/cm2

f2 min = (100.43) + 100.56
= 0.12 kg/cm2

1 kg/cm2 = 14.21 psi
fc = 400.00 kg/cm2
= 5,684.24 psi
vc min allowance = 2 @sqrt(fc)
= 150.79 psi
= 10.61 kg/cm2
vc max.allowance = 5 @sqrt(fc)
= 376.97 psi
= 26.53 kg/cm2

Project : Medan Flood Control	Japan International Cooperation Agency (JICA)	Calculation sheet	
Channel : Medan Flood Way		Date	
Structure : Br – F4		Nos of sheet	
Station : Fw 30 + 80		Prepared by	

I.2.16 Deflection of beam

I. deflection computation

deflection is " bending moment " as load

I.a deflection due to bending moment as parabola

$$ya = \frac{5 . Mo . l^2}{48 . EI}$$

I.b deflection due to bending moment as perpendicular

$$yb = \frac{Mo . l^2}{8 . EI}$$

I.c deflection due to bending moment as triangle

$$yc = \frac{Mo . l^2}{12 EI}$$

II. data

span	=	31.00	m
	=	3,100	cm
E – c	=	317,989	kg/cm2
Inertia of beam	=	14,611,103	cm4
E x I	=	4,646,170,031,867	kg.cm2
Inertia of composite	=	36,015,431	cm4
E x I	=	11,452,510,888,259	

II. loading

a. dead load

nos.of beam	=	3.00			
weight of beam	=	3.705	t/m'	=	1.235 t/m'
weight of slab	=	3.075	t/m'	=	1.025 t/m'
weight of cross beam	=	0.171	t/m'	=	0.057 t/m'
weight of curb	=	1.453	t/m'	=	0.484 t/m'
		weight of dead load		=	1.566 t/m'
weight of asphalt	=	0.158	t/m'	=	0.053 t/m'
weight of ballast	=	2.835	t/m'	=	0.945 t/m'
weight of sleeper	=	0.281	t/m'	=	0.094 t/m'
weight of rail	=	0.1	t/m'	=	0.033 t/m'
		weight of super imposed		=	1.125 t/m'
weight of live load	=	148.65	ton	=	49.550 ton
live load				=	1.598 t/m'

III. moment

a. moment due to external load = Mo

	cofficient	x	load t/m'	x	l^2 m	=	moment kg.cm
	dead load						
weight of beam	0.125	x	1.235	x	961.0	=	14,835,438
dead load	0.125	x	1.566	x	961.0	=	18,815,579
super imposed	0.125	x	1.125	x	961.0	=	13,510,058

b. moment due to prestressed force

b.1 at stressing of tendon no.5

jacking force	=	719.127	ton	
initial force	=	649.670	ton	
n	=	0.75		
final	=	487.253	ton	
e1	=	0.3684	m	eccentrisitas cable at midle span
e2	=	0.3886	m	eccentrisitas cable at edge span
e1 + e2	=	0.7570	m	

at edge	M2	=	P (ton)	x	e2 (m)	=	Moment (kg.cm)
		=	719	x	0.37	=	26,492,639
at middle	M1		–P (ton)	x	e2 (m)		
		=	(719)	x	0.76	=	(54,437,914)

b.2 at transfer

e1		=	0.5047	m	eccentrisitas cable at midle span		
e2		=	0.0114	m	eccentrisitas cable at edge span		
e1 + e2		=	0.5047	m			
at edge	M2	=	P (ton)	x	e2 (m)	=	Moment (kg.cm)
		=	649.670	x	0.0114	=	740,623.800
at middle	M1	=	–P (ton)	x	e2 (m)		
		=	(649.670)	x	0.5047	=	–3.28E+07

IV. deflection computation

a. by external load

load		5/48 coefficient	x	Mo kg.cm	x	l^2 cm^2	:	E.I kg.cm2	=	y mm
		a. deal load								
self weight	(1)	0.1042	x	14,835,438	x	9,610,000	:	1.15E+13	=	12.967
slab deck	(2)	0.1042	x	18,815,579	x	9,610,000	:	1.15E+13	=	16.446
asphalt	(3)	0.1042	x	13,510,058	x	9,610,000	:	1.15E+13	=	11.809

b. by prestressing force

b.1 at tressing of tendon no.5

at edge	1/8	x	M2	x	l^2	:	E.I	=	y
	0.125	x	26,492,639	x	9,610,000	:	4.65E+12	=	68.50
at midle	5/48	x	M1	x	l^2	:	E.I	=	y
	0.1042	x	(54,437,914)	x	9,610,000	:	4.65E+12	=	(117.29)
	balance	=	(117.29)	+	68.50	=	(48.79)		mm
	by self weight beam					=	12.97		mm
	total	=	(48.79)	+	12.97	=	(35.83)		mm

b.2 at transfer

at edge	1/8	x	M2	x	l^2	:	E.I	=	y
	0.125	x	740,624	x	9,610,000	:	4.65E+12	=	1.91
at midle	5/48	x	M1	x	l^2	:	E.I	=	y
	0.1042	x	(32,788,845)	x	9,610,000	:	4.65E+12	=	(70.65)
	balance	=	(70.65)	+	1.91	=	(68.73)		mm
	by self weight beam					=	12.97		mm
	total	=	(68.73)	+	12.97	=	(55.76)		mm

V. short term deflection

uncracked beam

	coeeficient	load t.m	x	l m	=	Moment kg.cm
uniform load	0.125	1.598	x	961.0	=	19,200,625

load	deflection coeeficient	x	Mo kg.cm	x	I^2 cm^2	:	E.I kg.cm2	=	y mm
uniform load	5/48	x	Mo	x	I^2	:	E.I	=	y
	0.1042	x	19,200,625	x	9,610,000	:	1.1453E+13	=	16.76
			total					=	16.76

VI. long term deflection

cracked beam

Cracking moment

Cracking moment is the moment for which thr tensile stress on the extreem fibre of the concrte section reaches a value equal to the modulus of rupture of the concrete.

modulus of rupture of the concrete = fr

fr	=	7.5 . @sqrt (fc') psi
fc'	=	40 Mpa
1 Mpa	=	145.0326 psi
40 Mpa	=	5801.304 psi
fr	=	(571.25) psi
1 psi	=	0.07 kg/cm2
fr	=	(39.99)kg/cm2

M cr	=	n.P. (kt – e)	–	fr . wb	
n.Pi = P	=	487,253	kg		
kt	=	43.02	cm		
e	=	–50.47	cm		
(kt – e)	=	93.49	cm		
wb	=	205,390.50	cm3		
fr x wb	=	(39.99) x		2.05E+05	
	=	(8,213,012.19)kg.cm			

M cr	=	n.P	x	(kt – e)	–	fr.wb
	=	487,252.50	x	93.49	–	(8,213,012.19)
	=	45,553,236.23	–	–8.21E+06		
	=	53,768,248.42 kg.cm				

deflection by cracking moment = yc

yc = 5 / 48 x Mo x I^2 : EI

5/48 cofficient	x	Mcr kg.cm	x	I^2 cm2	:	E.I kg.cm2	=	yc mm
0.1042	x	53,768,248	x	9,610,000	:	1.1453E+13	=	47.00
deflection by tendon							=	(55.76)

total deflection = 47.00 + (55.76)

= (8.77) mm

permissible deflections = span / 300

= 31,000 / 300

= 103.33 mm ok

4 - 553

def-31

Project	: Medan Flood Control	Japan International Cooperation Agency (JICA)
Channel	: Medan Flood Way	
Structure	: Br – F4	
Station	: Fw 03 + 080	

Calculation sheet

Date

Nos of sheet

Prepared by

L3 Loading on Abutment

span	=	31.60 m	Unit weight of asphalt	=	1.500	t/m3
clear span	=	31.00 m	Thickness of concrete deck	=	0.300	m
			Unit weight of concrete K–225	=	2.400	t/m3
		slab	Unit weight of concrete K–400	=	2.500	t/m3
width of rail way	=	3.50 m	Unit weight of sand	=	1.800	t/m3
width of curb 2 x 0.60 m	=	0.60 m	Unit weight of ballast	=	1.800	t/m3
total width of slab	=	4.10 m	Unit weight of sleeper	=	2.500	t/m3
			Unit weight of rail	=	7.800	t/m3
thickness of ballast	=	0.40 m				
thickness of sand	=	0.15 m				
thickness of sand	=	0.030 m				
		beam				
nos = n	=	3.00 m	End block section area	=	0.960	m2
space = S	=	1.50 m	Prestressed section area	=	0.477	m2
thick of web = tw	=	0.18 m	Additional area at end block	=	0.483	m2
depth	=	1.60 m				
depth of flens	=	0.525 m				

cross beam

length	= (S – tw) x nos of beam – 1						
n – 1	=	2.00					
S – tw	=	1.50	–	0.18	=	1.320	m
length	=	1.32	x	2.00	=	2.640	m
width	=	0.20	m				
depth	=	1.600	–	0.525	=	1.075	m
area	=	0.200	x	1.075	=	0.215	m

end block

length	=	2.00	x	1.60	=	3.200	m
volume	=	0.48	x	3.20	=	1.544	m
volume / m run	=	1.54	:	31.00	=	0.050	m

a. By Dead load

	Description		width m	x	thick m	x	length m3	x	nos	x	Y t/m3	=	weight ton/m'
1.a	Beam												
	load of a beam				0.4774	x	1.00	x	3.00	x	2.50	=	3.58
	weight of end block per m'								0.05	x	2.50	=	0.12
	weight of end block and beam per m'											=	3.71
	weight of end block and beam	=	3.71	x	31.00	=	114.86	ton					
a.2	Slab	gs / m'	=	4.10	x	0.300	x	1.00	x	1.00	x	2.500	=	3.07
		gs	=	3.07	x	31.60	=	97.17	ton				
a.3	Asphalt												
		ga / m'	=	3.50	x	0.03	x	1.00	x	1.00	x	1.500	=	0.16
		ga	=	0.16	x	31.60	=	4.98	ton				
a.4	Ballast												
		gsw /m'	=	3.50	x	0.650	x	1.00	x	1.00	x	1.800	=	4.10
		gsw	=	4.10	x	31.60	=	129.40	ton				
a.5	Cross Beam												
		gcb	=	0.215	x	2.640	x	1.00	x	4.0	x	2.500	=	5.68
a.6	Sand												
		gsn/m'	=	3.50	x	0.150	x	1.00	x	1.00	x	1.800	=	0.95
		gsn	=	0.95	x	31.60	=	29.86	ton				

sup-lod

a.7 Concrete curb

	gcr / m'	=	0.35	x	0.830	x	1.00	x	2.0	x	2.500	= 1.45
	gcr	=	1.45	x	31.60	=	45.90	ton				

a.8 Sleeper

	g slp / m'	=	0.25	x	1.50	x	0.30	x	1.0	x	2.500	= 0.28
	gsp	=	0.28	x	64.00	=	18.00	ton				

a.8 Rail

	grl / m'	=										= 0.10
	g rl	=	0.10	x	31.60	=	3.16	ton				

Total	=	a.1	+	a.2	+	a.3	+	a.4	+	a.5		
	+	a.6	+	a.7	+	a.8	+	a.9				
	=	114.86	+	97.17	+	4.98	+	129.40	+	5.68	=	352.08
	+	29.86	+	45.90	+	18.00	+	3.16			=	96.92
										sum	=	449.00

Influence line (LL) of Reaction

$$Ra = \frac{(L - nX)}{L}$$

L = 31.00 m

X = 1.20 m

Influence line of reaction

l	X	n.X	L−nX	Ra
0.00	1.20	0.00	31.00	1.00
1.00	1.20	1.20	29.80	0.96
2.00	1.20	2.40	28.60	0.92
3.00	1.20	3.60	27.40	0.88
4.00	1.20	4.80	26.20	0.85
5.00	1.20	6.00	25.00	0.81
6.00	1.20	7.20	23.80	0.77
7.00	1.20	8.40	22.60	0.73
8.00	1.20	9.60	21.40	0.69
9.00	1.20	10.80	20.20	0.65
10.00	1.20	12.00	19.00	0.61
11.00	1.20	13.20	17.80	0.57
12.00	1.20	14.40	16.60	0.54
13.00	1.20	15.60	15.40	0.50
14.00	1.20	16.80	14.20	0.46
15.00	1.20	18.00	13.00	0.42
16.00	1.20	19.20	11.80	0.38
17.00	1.20	20.40	10.60	0.34
18.00	1.20	21.60	9.40	0.30
19.00	1.20	22.80	8.20	0.26
20.00	1.20	24.00	7.00	0.23
21.00	1.20	25.20	5.80	0.19
22.00	1.20	26.40	4.60	0.15
23.00	1.20	27.60	3.40	0.11
24.00	1.20	28.80	2.20	0.07
25.00	1.20	30.00	1.00	0.03
26.00	1.00	31.00	0.00	0.00

Impact coefficient

$$I = 1.1 + \frac{22.5}{(L + 50)}$$

$$I = 1.10 + \frac{22.50}{81.00}$$

$$= 1.378$$

Reaction by Live load

l	X	n.X	Influence line of reaction	load ton	Impact coefficient (Y)	Reaction by live load
0.00	0.00	0.00	1.00	12.00	1.378	16.533
1.00	1.20	1.20	0.96	12.00	1.378	15.893
2.00	1.20	2.40	0.92	12.00	1.378	15.253
3.00	1.20	3.60	0.88	12.00	1.378	14.613
4.00	1.20	4.80	0.85	12.00	1.378	13.973
5.00	1.20	6.00	0.81	12.00	1.378	13.333
6.00	1.20	7.20	0.77	12.00	1.378	12.693
7.00	1.20	8.40	0.73	12.00	1.378	12.053
8.00	1.20	9.60	0.69	12.00	1.378	11.413
9.00	1.20	10.80	0.65	12.00	1.378	10.773
10.00	1.20	12.00	0.61	12.00	1.378	
11.00	1.20	13.20	0.57	12.00	1.378	9.493
12.00	1.20	14.40	0.54	12.00	1.378	8.853
13.00	1.20	15.60	0.50	12.00	1.378	8.213
14.00	1.20	16.80	0.46	12.00	1.378	7.573
15.00	1.20	18.00	0.42	12.00	1.378	
16.00	1.20	19.20	0.38	12.00	1.378	6.293
17.00	1.20	20.40	0.34	12.00	1.378	5.653
18.00	1.20	21.60	0.30	12.00	1.378	5.013
19.00	1.20	22.80	0.26	12.00	1.378	4.373
20.00	1.20	24.00	0.23	12.00	1.378	3.733
21.00	1.20	25.20	0.19	12.00	1.378	3.093
22.00	1.20	26.40	0.15	12.00	1.378	2.453
23.00	1.20	27.60	0.11	12.00	1.378	1.813
24.00	1.20	28.80	0.07	12.00	1.378	1.173
25.00	1.20	30.00	0.03	12.00	1.378	0.533
26.00	1.00	31.00	0.00	12.00	1.378	0.000
						204.80

Total load

load on Abutment	by dead load	by live load	total ton
	449.00	204.80	653.80

PRESTRESSED CONCRETE BRIDGE COMPUTATION

CHANNEL MEDAN FLOOD WAY

Br – Mf 4

Station : Fw 30 + 80

span
31.00

II SUB STRUCTURE

Abutment

- II.1 Neutral axis of Abutment
- II.2 Earthquake coefficient
- II.3 Axial forces on Abutment
- II.4 Coulumb coefficient
- II.5 Horizontal force
  - II.5.1 Case – I,Normal condition (HWL)
  - II.5.2 Case – II,Normal condition (LWL)
  - II.5.3 Case – III,Earthquake condition (HWL)
  - II.5.4 Case – IV,Earthquake condition (LWL)
- II.6 Combined Load on Abutment
  - II.6.1 Case – I,Normal condition (HWL)
  - II.6.2 Case – II,Normal condition (LWL)
  - II.6.3 Case – III,Earthquake condition (HWL)
  - II.6.4 Case – IV,Earthquake condition (LWL)

Project : Medan Flood Control Channel : Medan Flood Way Structure : Br – F4 Station : Fw 30 + 80	Japan International Cooperation Agency (JICA)	Calculation sheet Date Nos of sheet Prepared by

II ABUTMENT

II.1 Neutral axis

Top deck elevation		=	39.550	m						
Fotting bottom elevation		=	32.050	m						
depth of abutment = Ht		=	7.50	m						
depth beam		=	1.60	m						
depth slab		=	0.245	m						
depth of beam to deck		=	1.845	m						
depth of beam and deck		=	1.600	+	0.245	=	1.845	m		
depth bearing pad						=	0.100	m		
depth back wall		=	1.845	+	0.100	=	1.945	m		
depth of footing		=	1.000	m						
depth of steam		=	7.500	–	1.945	–	1.000	=	4.555	m

	H1	=	1.945	m	W1	=	0.300 m
	H2	=	4.555	m	Wf1	=	2.300 m
	H3	=	1.000	m	Wf2	=	1.000 m
	Ht	=	7.500	m	Wf3	=	1.800 m
		=			W3	=	5.100 m
Depth of back fill		=	7.500	–	1.000	=	6.500 m
	H4	=	0.500	m	W4	=	0.550 m
	H5	=	0.250	m	W5	=	0.550 m
	H6	=	0.500	m	W6	=	0.200 m
	H7	=	0.250	m	W7	=	0.200 m
	H8	=	0.300	m	W8	=	0.300 m
	H9	=	0.300	m	W9	=	1.800 m

A1	W1	=	0.300	X1 =	W1/2	+	W2	+	Wf3					
					0.150	+	1.000	+	1.800		=	2.950	m	
	H1	=	1.945	Y1 =	Ht	–	H1/2							
					7.500	–	0.973				=	6.528	m	
A2	W2	=	1.000	X2 =	W2/2	+	Wf3							
					0.500	+	1.800				=	2.300	m	
	H2	=	4.555	Y2 =	H2/2	+	H3							
					2.278	+	1.000				=	3.278	m	
A3	W3	=	5.100	X3 =	W3/2									
					2.550						=	2.550	m	
	H3	=	1.000	Y3 =	H3/2									
					0.500						=	0.500	m	
A4	W4	=	0.550	X4 =	W4/2	+	W2	+	Wf3					
					0.275	+	1.000	+	1.800		=	3.075	m	
	H4	=	0.500	Y4 =	H2	–	H4/2	+	H3					
					4.555	–	0.500	+	1.000		=	5.055	m	
A5	W5	=	0.550	X5 =	W5/3	+	W2	+	Wf3					
					0.183	+	1.000	+	1.800		=	2.983	m	
	H5	=	0.250	Y5 =	H2	–	H4/2	–	H5/3	+ H3				
					4.555	–	0.250	–	0.083	+ 1.000	=	5.222	m	
A6	W6	=	0.200	X6 =	Wf3	–	W6/2							
					1.800	–	0.100				=	1.700	m	
	H6	=	0.500	Y6 =	H2	–	H6/2	+	H3					
					4.555	–	0.250	+	0.083		=	4.388	m	
A7	W7	=	0.200	X7 =	Wf3	–	W7/3							
					1.800	–	0.067				=	1.733	m	
	H7	=	0.250	Y7 =	H2	–	H6/2	–	H7/3	+ H3				
					4.555	–	0.250	–	0.083	+ 1.000	=	5.222	m	

ar–xy

A8	W8	=	2.300	X8 =	W8/3	+	Wf2	+	Wf3				
					0.767	+	1.000	+	1.800	=	3.567	m	
	H8	=	0.300	Y8 =	H8/3	+	H3						
					0.100	+	1.000			=	1.100	m	
A9	W9	=	1.800	X9 =	W9x2/3								
					1.200					=	1.200	m	
	H9	=	0.300	Y9 =	H9/3	+	H3						
					0.100	+	1.000			=	1.100	m	

Wing wall

Hgw	=	1.200	m	H back fill	=	6.50	m
Ww1	=	3.00	m	Hw1	=	3.00	m
Ww2	=	2.30	m	Hw2	=	1.00	m
Ww3	=	0.70	m	Hw3	=	1.00	m
Ww4	=	2.30	m	Hw4	=	2.20	m
Ww5	=	2.30	m	Hw5	=	0.30	m

Ww1	Ww1	=	3.000	Xw1 =	Ww1/2	+	W2	+	Wf3				
					1.500	+	1.000	+	1.800	=	4.300	m	
	Hw1	=	3.000	Yw1 =	Ht	−	Hw1/2						
					7.500	−	1.500			=	6.000	m	
Ww2	Ww2	=	2.300	Xw2 =	Ww2/2	+	W2	+	Wf3				
					1.150	+	1.000	+	1.800	=	3.950	m	
	Hw2	=	1.000	Yw2 =	Ht	−	Hw1	−	Hw2/2				
					7.500	−	3.000	−	0.500	=	4.000	m	
Ww3	Ww3	=	0.700	Xw3 =	W3	−	Ww3/2						
					5.100	−	0.350			=	4.750	m	
	Hw3	=	1.000	Yw3 =	Ht	−	Hw1	−	Hw3/2				
					7.500	−	3.000	−	0.333	=	4.167	m	
Ww4	Ww4	=	2.300	Xw4 =	Ww4/2	+	W2	+	Wf3				
					1.150	+	1.000	+	1.800	=	3.950	m	
	Hw4	=	2.200	Yw4 =	Hw4/2	+	Hw5	+	H3				
					1.100	+	0.300	+	1.000	=	2.400	m	
Ww5	Ww5	=	2.300	Xw5 =	W3	−	Ww5x2/3						
					5.100	−	1.533			=	3.567	m	
	Hw5	=	0.300	Yw5 =	Hw5/3	+	H3						
					0.100	+	1.000			=	1.100	m	

Guide wall

Gw	Wgw	=	3.000	Xgw =	Wgw/2	+	W2	+	Wf3				
					1.500	+	1.000	+	1.800	=	4.300	m	
	Hgw	=	1.200	Ygw =	Ht	+	Hgw/2						
					7.500	+	0.600			=	8.100	m	

Approach slab

Apr	Wapr	=	3.000	Xapr =	Wapr/2	+	W2	+	Wf3				
					1.500	+	1.000	+	1.800	=	4.300	m	
	Hapr	=	0.200	Yapr =	Ht	−	H1	+	Hapr/2				
					7.500	−	1.945	+	0.100	=	5.655	m	

Asphalt

Ha	=	0.05	m	

Asp	Wasp	=	3.000	Xasp =	W9/2	+	W2	+	Wf3				
					1.500	+	1.000	+	1.800	=	4.300	m	
	Hasp	=	0.050	Yasp =	Ht	−	Hasp/2						
					7.500	−	0.025			=	7.475	m	

Back fill

a. In case High Water Level

Hwl elvation	=	31.980	m			
Lwl elvation	=	28.180	m			
Base foting elv.	=	39.550	−	7.500	=	32.050 m
Top foting elv.	=	32.050	+	1.000	=	33.050 m

Top foting elv. > or higher than Elv.of LWL

Depth of wet soil

H wet.l	=	39.550	−	33.050	=	6.500 m
H wet.r	=	H wet.l	−	H1		
	=	6.500	−	1.945	=	4.555 m

Depth of saturated soil = H sat.l

H sat.l	=	6.500	−	6.500	=	0.000 m

a.1 soil wet condition

wet.l	Wwet.l	=	2.300	X1 =	Wwet.l/2	+	W2	+	Wf3				
					1.150	+	1.000	+	1.800	=	3.950	m	
	Hwet.l	=	6.500	Y1 =	Ht	−	Hwet.l/2						
					7.500	−	3.250			=	4.250	m	
wet.r	Wwet.r	=	1.800	X2 =	Wf3/2								
					0.900					=	0.900	m	
	Hwet.r	=	4.555	Y2 =	Hwet.r/2	+	H3						
					2.278	+	1.000			=	3.278	m	

a.2 soil saturated condition

sat.l	Wsat.l	=	2.300	X1 =	Wsat.l/2	+	W2	+	Wf3				
					1.150	+	1.000	+	1.800	=	3.950	m	
	Hsat.l	=	0.000	Y1 =	Hsat.l/2	+	H3						
					0.000	+	1.000			=	1.000	m	
sat.r	Wsat.r	=	1.800	X2 =	Wsat.r/2								
					0.900					=	0.900	m	
	Hsat.r	=	0.000	Y2 =	Hsat.r/2	+	H3						
					0.000	+	1.000			=	1.000	m	

b. In case Low Water Level

b.1 soil wet condition

Depth of wet soil = Hwet

H wet.l	=	39.550	−	33.050	=	6.500 m
H wet.r	=	6.500	−	1.945	=	4.555 m

Depth of saturated soil HWL = Hstr

Hsat	=	6.500	−	6.500	=	0.000 m

wet.l	Wwet.l	=	2.300	X1 =	Wwet.l/2	+	W2	+	Wf3				
					1.150	+	1.000	+	1.800	=	3.950	m	
	Hwet.l	=	6.500	Y1 =	Hwet.l/2	+	H3						
					3.250	+	1.000			=	4.250	m	
wet.r	Wwet.r	=	1.800	X2 =	Wwet.r/2								
					0.900					=	0.900	m	
	Hwet.r	=	4.555	Y2 =	Hwet.r/2	+	H3						
					2.278	+	1.000			=	3.278	m	

b.2 soil saturated condition

sat.l	Wsat.l	=	2.300	X1 =	Wsat.l/2	+	W2	+	Wf3				
					1.150	+	ERR	+	0.000	=	ERR	m	
	Hsat.l	=	0.000	Y1 =	Hsat.l/2	+	H3						
					0.000	+	H3			=	0.000	m	
sat.r	Wsat.r	=	1.800	X2 =	Wsat.r/2								
					0.900					=	0.900	m	
	Hsat.r	=	0.000	Y2 =	Hsat.r/2	+	H3						
					0.000	+	0.200			=	0.200	m	

ar−xy

Project	: Medan Flood Control	Japan International Cooperation Agency (JICA)	Calculation sheet	
Channel	: Medan Flood Way		Date	
Structure	: Br. F 4		Nos of sheet	
Station	: Fw 30 + 80		Prepared by	

II.2 Lateral earth pressure due to earthquake

Kh = C x I x S

Kh = coefficient of horizontal siesmic loading

C = the base shear coefficient,base on the data :

siesmic zone and soil condition

Siesmic zone = 4

soil condition soft sc C = 0.15

S = the structure type factor = 1

I = the importance factor

for bridge carrying more than 2.000 vehicle per day I = 1.2

C	I	S	kh
0.15	1.2	1	0.18

for all other permanent bridge I = 1

C	I	S	kh
0.15	1	1	0.15

for temporary bridge I = 0.8

C	I	S	kh
0.15	0.8	1	0.12

soil condition firm sc C = 0.10

for bridge carrying more than 2.000 vehicle per day

C	I	S	kh
0.1	1.2	1	0.12

for all other permanent bridge

C	I	S	kh
0.1	1.00	1	0.10

for temporary bridge

C	I	S	kh
0.1	0.8	1	0.08

source,Bridge Management System

eq

Project	: Medan Flood Control	Japan International Cooperation Agency (JICA)	Calculation sheet	
Channel	: Medan Flood Way		Date	
Structure	: Br – F4		Nos of sheet	
Station	: Fw 30 + 80		Prepared by	

II.3 Axial load to Abutment

a. Superstucture

Length of Abutment = 7.50 m

Depth of Abutment = 7.50 m

Width of footing = 5.10 m

Vertical load on abutment

	Dead load	+	Live load	=	Total
	ton		ton		ton
Total weight	449.00	+	204.00	=	653.00
Weight per Abt.	224.50	+	102.00	=	326.50
Weight per m'	29.93		13.60	=	43.53

Siesmic coefficient = 0.15

Horizontal load

Heq = 0.150 x Rdl

= 0.150 x 29.933

= 4.490 ton/m'

Acting point of siesmic load

Wf3 = 1.80 m

H3 = 1.00 m

X = 0.300 + WF3

= 0.300 + 1.80

= 2.100 m

Y = H2 + H3

= 4.555 + 1.00

= 5.56 m

b. Abutment section

Self weight

Sec-tion	width m	depth m	length m	nos	Yc t/m3	G / m'	Gv/m' m3	X m	Y m	G.X m3	G.Y m3
A1	0.30	1.945	1.00	1.00	2.40	1.400	1.400	2.950	6.528	4.131	4.131
A2	1.00	4.555	1.00	1.00	2.40	10.932	10.932	2.300	3.278	25.144	25.144
A3	5.10	1.00	1.00	1.00	2.40	12.240	12.240	2.550	0.500	31.212	31.212
A4	0.55	0.50	1.00	1.00	2.40	0.660	0.660	3.075	5.055	2.030	2.030
A5	0.55	0.25	1.00	1.00	2.40	0.165	0.165	2.983	5.222	0.492	0.492
A6	0.20	0.50	1.00	1.00	2.40	0.240	0.240	1.700	4.388	0.408	0.408
A7	0.20	0.50	1.00	1.00	2.40	0.120	0.120	1.733	5.222	0.208	0.208
A8	2.30	0.30	1.00	1.00	2.40	0.828	0.828	4.333	1.100	3.588	3.588
A9	1.80	0.30	1.00	1.00	2.40	0.648	0.648	1.200	1.100	0.778	0.778
					sum		27.23			67.99	67.99
Wing wall and guard wall											
Ww1	3.000	3.000	0.40	2.00	2.400	2.304	0.307	4.300	6.000	1.321	1.321
Ww2	2.300	1.000	0.40	2.00	2.400	0.589	0.079	3.950	4.000	0.310	0.314
Ww3	0.400	1.000	0.40	2.00	2.400	0.102	0.014	5.333	4.167	0.073	0.057
Ww4	2.300	2.000	0.40	2.00	2.400	1.178	0.157	3.950	2.400	0.620	0.377
Ww5	2.300	0.300	0.40	2.00	2.400	0.177	0.024	0.533	1.100	0.013	0.026
Gw	3.000	1.20	0.40	2.00	2.000	0.768	0.102	4.300	8.100	0.440	0.829
					sum		0.580			2.337	2.095
Miscellaneous load											
Aproasch Road,Guide wall and Asphalt											
Aps	3.00	0.20	1.00	1.00	2.400	1.44	1.440	4.300	5.655	6.192	8.143
asp	3.00	0.05	1.00	1.00	2.300	0.35	0.345	4.300	7.475	1.483	2.579
					sum		1.785			7.675	10.722
					total		29.598			78.00	80.81

axl-lod

Centre of gravity

		Gv/m'.X				Gv/m'.Y			
X	=	---			Y	=	---		
		Gv/m'					Gv/m'		
		78.002					80.806		
	=	---	=	2.635 m		=	---	=	2.730 m
		29.598					29.598		

H-abt = 0.150 x 29.598 = 4.440 ton

c. Back fill

a. High Water level

Hwl = 31.98 m under footing elevation
Lwl = 27.18 m
Depth of back fill = 6.500 m
H wet.l = 6.500 m
H wet.r = 4.555 m
H saturated = 0.000 m

Section	width m	depth m	length m	nos	Yc t/m3	G / m'	Gv/m' m3	X m	Y m	G.X m3	G.Y m3
Wet.l	2.300	6.500	1.00	1.00	1.850	27.658	27.658	3.950	4.250	109.25	117.54
Wet.r	1.800	4.555	1.00	1.00	1.850	15.168	15.168	0.900	3.278	13.65	49.72
Sat.l	2.300	0.000	1.00	1.00	2.000	0.000	0.000	3.950	1.000	0.000	0.000
Sat.r	1.800	0.000	1.00	1.00	2.000	0.000	0.000	0.900	1.000	0.000	0.000
					sum		42.826			122.898	167.266

		Gv/m'.X				Gv/m'.Y			
X	=	---			Y	=	---		
		Gv/m'					Gv/m'		
		122.898					167.266		
	=	---	=	2.870 m		=	---	=	3.906 m
		42.826					42.826		

H-abt = 0.150 x 42.826 = 6.424 ton

b. Low water level

Depth of Hwet.l = 6.500 m
Depth of Hwet.r = 4.555 m
Depth of H saturated = 0.000 m

a. Wet condition

Section	width m	depth m	length m	nos	Yc t/m3	G / m'	Gv/m' m3	X m	Y m	G.X m3	G.Y m3
Wet.l	2.300	6.500	1.00	1.00	1.850	27.658	27.658	3.950	4.250	109.247	117.544
Wet.r	1.800	4.555	1.00	1.00	1.850	15.168	15.168	0.900	3.028	13.651	45.929
Sat.l	2.300	0.000	1.00	1.00	2.000	0.000	0.000	3.950	0.000	0.000	0.000
Sat.r	1.800	0.000	1.00	1.00	2.000	0.000	0.000	0.900	0.000	0.000	0.000
					sum		42.826			122.898	163.474

Habt 0.150 x 42.826 = 6.424 ton

Centre of gravity

		Gv/m'.X				Gv/m'.Y			
X	=	---			Y	=	---		
		Gv/m'					Gv/m'		
		122.898					163.474		
	=	---	=	2.870 m		=	---	=	3.817 m
		42.826					42.826		

axl-lod

Project	: Medan Flood Control	Japan International Cooperation Agency (JICA)	Calculation sheet
Channel	: Medan Flood Way		Date
Structure	: Br. F 4		Nos of sheet
Station	: Fw 30 + 60		Prepared by

II.4 Columb's coefficient

Right side Abutment

Normal condition

ø	=	30.00	deg.	ø - alpa	=	30.00 -	0.0 =	30.00	deg.
alpa	=	0.0	deg.	ø + delta	=	30.00 +	30.00 =	60.00	deg.
Q	=	0.0	deg.	ø - beta	=	30.00 -	0.0 =	30.00	deg.
delta	=	30.00	deg.	alpa + delta	=	0.0 +	30.00 =	30.00	deg.
beta	=	0.0	deg.	alpa - beta	=	0.0 -	0.000 =	0.00	deg.

$$Ka = \frac{\cos^2(\phi - alpa)}{\cos^2 alpa \cdot \cos(alpa + delta) \cdot \left\{\left(1 + \sqrt{\frac{\sin(\phi + delta)\cdot\sin(\phi - beta)}{\cos(alpa + delta)\cdot\cos(alpa - beta)}}\right)\right\}^2}$$

Cos(alpa)	=	1.000		sin(ø + delta)	=	0.866	
Cos^2 (alpa)	=	1.000		sin(ø - beta)	=	0.500	
Cos(ø - alpa)	=	0.866		cos(alpa + delta)	=	0.866	
Cos^2 (ø - alpa)	=	0.750		cos(alpa - beta)	=	1.000	

A = sin(ø+delta).sin(ø-beta) = 0.866 x 0.500 = 0.433

B = cos (alpa + delta).cos(alpa-beta) = 0.866 + 1.000 = 0.866

C = cos^2 (alpa).cos(alpa+delta) = 1.000 x 0.866 = 0.866

@sqrt(A/B) = 0.71

D = (1 + @sqrt(A/B)^2 = (1.000 + 0.707)^2 = 2.914

C.D = 0.866 x 2.914 = 2.524

$$Ka = \frac{\cos^2(\phi - alpa)}{C.D} = \frac{0.75}{2.52} = 0.297$$

Earth quake condition

$$Ke = \frac{\cos(\phi - alpa - Qo)^2}{\cos Qo \cdot \cos^2 alpa \cdot \cos(alpa + delta^{\wedge} + Qo) \cdot \left\{\left(1 + \sqrt{\frac{\sin(\phi + delta)\cdot\sin(\phi - beta - Qo)}{\cos(alpa + delta + Qo)\cdot\cos(alpa - beta)}}\right)\right\}^2}$$

Qo = composite siesmic angle

k' = tan^-1.k

$$= \frac{Y}{Y-1} \times k$$

k = siesmic coefficient in air = 0.15

Y = 2.00

Y - 1 = 1.00

$$k' = \frac{Y}{Y-1} \times k = \frac{2.00}{1.00} \times 0.15 = 0.30$$

Qo = @atan^-1.k

Qo = 8.5308

colum

e	=	30.00	deg.	e − alpa−Qo	=	30.00	−	0.00	−	8.53	= 21.47
alpa	=	0.00	deg.	e + delta	=	30.00	+	15.00			= 45.00
Q	=	8.53	deg.	e − beta−Qo	=	30.00	−	0.00	−	8.53	= 21.47
delta	=	15.00	deg.	e − beta + Qo	=	30.00	−	0.00	+	8.53	= 38.53
beta	=	0.00	deg.	alpa + delta+Qo	=	0.00	+	15.00	+	8.53	= 23.53
				alpa − beta	=	0.000	−	0.000			= 0.00

Cos(Qo)	=	0.989		
Cos(alpa)	=	1.000	sin(e + delta)	= 0.707
Cos^2 (alpa)	=	1.000	sin(e − beta − Qo)	= 0.366
Cos(e − alpa − Qo)	=	0.931	cos(alpa + delta + Qo)	= 0.917
Cos^2 (e − alpa−Qo)^2	=	0.866	cos(alpa − beta)	= 1.000

A = sin(e+delta).sin(e−beta−Qo)
= 0.707 x 0.366
= 0.259

B = cos (alpa + delta+Qo).cos(alpa−beta)
= 0.917 + 1.000
= 0.917

C = cos Qo.Cos^2(alpa).cos(alpa+delta+Qo)
= 0.989 x 1.000 x 0.92
= 0.907

@sqrt(A/B) = 0.531

D = (1 + @sqrt(A/B)^2
= (1.000 + 0.531)^2
= 2.345

C.D = 0.907 x 2.345
= 2.126

$$Ka = \frac{Cos^2(e-alpa)}{C.D} = \frac{0.87}{2.126} = 0.407$$

colum

Project : Medan Flood Control	Japan International Cooperation Agency (JICA)	Calculation sheet
Channel : Medan Flood Way		Date
Structure : Br − F4		Nos of sheet
Station : Fw 50 + 80		Prepared by

II.5 Horizontal force at Abutment

II.5.1 Normal Condition

Case − I, High Water Level

Depth of Abutment	=	7.50	m			
Surcharge load	=	1.00	t/m2			
Unit weight wet soil	=	1.85	t/m3			
Unit weight saturated soil	=	2.00	t/m3			
Unit weight of water	=	1.00	t/m3			
Width of footing						
Wf1	=	2.30	m			
Wf2	=	1.00	m			
Wf3	=	1.80	m			
W3	=	5.10	m			
Elevation of Hwl	=	31.980	m			
Elevation of Lwl	=	27.180	m			
Top slab elevation	=	39.550	m			
Depth of footing	=	1.000	m			
Elv.of base footing	=	39.550	−	7.50	=	32.050 m
Elv.of top footing	=	32.050	+	1.00	=	33.050 m
Depth of back fill	=	39.550	−	33.050	=	6.500 m

Depth of wet soil = H wet
H wet = Top elv. − Hwl elv.
H wet = 39.550 − 33.050 = 6.500 m
Depth of saturated soil = H sat
H sat = 6.50 − 6.500 = 0.000 m

A Active earth pressure
By live load
Surcharge load = (q)

q	=	1.000 t/m2	Sin(alpha)	=	0.000	
delta	=	0.000	L	=	1.000	m
alpa	=	0.000	H	=	6.500	m
Cos(alpha'	=	1.000	B	=	5.100	m

coefficient of active pressure Ka = 0.297

Pq = q x H x L x Ka
Pq = 1.000 x 6.500 x 1.000 x 0.297
Pq = 1.930 ton

Pqv	=	Hq	x Sin(alpha)	Pqh	=	Hq	x Cos(alpha)
	=	1.930	x 0.000		=	1.930	x 1.000
	=	0.000 ton			=	1.930 ton	
X	=	5.100 m		Y	=	6.500 : 2.000	
					=	3.250 m	

B By earth

B−1 Wet soil
Length = 1.000 m
Hwet = 6.500 m
Hsat = 0.000 m

fh−1

1. Load triangular

Pw	=	0.500	x	Ywet	x	Hwet^2	x	L	x	Ka
	=	0.500	x	1.850	x	42.250	x	1.000	x	0.297
	=	11.607	ton							

Pw(v)	=	Pw	x	Sin(alpha)	Pw(h)	=	Pw	x	Cos(alpha)	
	=	11.607	x	0.000		=	11.607	x	1.000	
	=	0.000	ton			=	11.607	ton		
X	=	5.100	m		Y	=	6.500	:	3.000	+ 0.000
						=	2.167	m		

B-2 Saturated

H sat = 0.000 m

2. Load rectangular

Ps1	=	Ysat	x	H sat	x	L	x	Ka
	=	2.000	x	0.000	x	1.000	x	0.297
	=	0.000	ton					

Ps1(v)	=	H sat	x	Sin(alpha)	Ps1(h)	=	H sat	x	Cos(alpha)	
	=	0.000		0.000		=	0.000	x	1.000	
	=	0.000	ton			=	0.000	ton		
X	=	5.100	m		Y	=	0.000	:	2.000	
						=	0.000	m		

3. Load triangular

Ps2	=	0.500	x	Ysat	x	H sat^2	x	L	x	Ka
	=	0.500	x	2.000	x	0.000	x	1.000	x	0.297
	=	0.000	ton							

Ps2(v)	=	H sat-2	x	Sin(alpha)	Ps2(h)	=	H sat-2	x	Cos(alpha)	
	=	0.000	x	0.000		=	0.000	x	1.000	
	=	0.000	ton			=	0.000	ton		
X	=	5.100	m		Y	=	0.000	:	3.000	
						=	0.000	m		

4. Water

Hw = 0.000 m

Pw	=	0.500	x	Yw	x	Hw^2	x	L
	=	0.500	x	1.000	x	0.000	x	1.000
	=	0.000	ton					
X	=	5.100	m					
Y	=	0.000	:	3.000				
	=	0.000	m					

5. Uplife HWL

B = 5.100 m

Pu	=	Hw	x	B	x	Yw
	=	0.000	x	5.100	x	1.000
	=	0.000	ton/m'			
X	=	5.100	:	2.000		
	=	2.550	m			

Project : Medan Flood Control	Japan International	Calculation sheet	
Channel : Medan Flood Way	Cooperation Agency	Date	
Structure : Br - F4	(JICA)	Nos of sheet	
Station : Fw 30 + 80		Prepared by	

Normal Condition

II.5.2 Case - II, Low Water Level

Depth of Abutment	=	7.50	m			
Surcharge load	=	1.00	t/m2			
Unit weight wet soil	=	1.85	t/m3			
Unit weight saturated soil	=	2.00	t/m3			
Unit weight of water	=	1.00	t/m3			
Width of footing						
Wf1	=	2.30	m			
Wf2	=	1.00	m			
Wf3	=	1.80	m			
W3	=	5.10	m			
Elevation of Hwl	=	31.980	m			
Elevation of Lwl	=	27.180	m			
Top slab elevation	=	39.550	m			
Depth of footing	=	1.000	m			
Elv.of base footing	=	39.550	-	7.50	=	32.050 m
Elv.of top footing	=	32.050	+	1.00	=	33.050 m
Depth of back fill	=	39.550	-	33.050	=	6.500 m

Depth of wet soil = H wet

H wet = Top elv. - Hwl elv.

H wet = 39.550 - 33.050 = 6.500 m

Depth of saturated soil = H sat

H sat = 6.50 - 6.500 = 0.000 m

A Active earth pressure

By live load

Surcharge load = (q)

q	=	1.000 t/m2	Sin(alpha)	=	0.000	
delta	=	0.000	L	=	1.000	m
alpa	=	0.000	H	=	6.500	m
Cos(alpha'	=	1.000	B	=	5.100	m

oefficient of active pressure Ka = 0.297

Pq	=	q	x	H	x	L	x	Ka
Pq	=	1.000	x	6.500	x	1.000	x	0.297
Pq	=	1.930	ton					

Pqv	=	Hq	x	Sin(alpha)	Pqh	=	Hq	x	Cos(alpha)	
	=	1.930	x	0.000		=	1.930	x	1.000	
	=	0.000	ton			=	1.930	ton		
X	=	5.100	m		Y	=	6.500	:	2.000	
						=	3.250	m		

B By earth

B-1 Wet soil

Length = 1.000 m

Hwet = 6.500 m

Hsat = 0.000 m

1. Load triangular

Pw	=	0.500	x	Ywet	x	Hwet^2	x	L	x	Ka
	=	0.500	x	1.850	x	42.250	x	1.000	x	0.297
	=	11.607	ton							

Pw(v)	=	Pw	x	Sin(alpha)	Pw(h)	=	Pw	x	Cos(alpha)	
	=	11.607	x	0.000		=	11.607	x	1.000	
	=	0.000	ton			=	11.607	ton		
X	=	5.100	m		Y	=	6.500	:	3.000	+ 0.000
						=	2.167	m		

B-2 Saturated

H sat = 0.000 m

2. Load rectangular

Ps1	=	Ysat	x	H sat	x	L	x Ka
	=	2.000	x	0.000	x	1.000	x 0.297
	=	0.000	ton				

Ps1(v)	=	H sat	x	Sin(alpha)	Ps1(h)	=	H sat	x	Cos(alpha)	
	=	0.000		0.000		=	0.000	x	1.000	
	=	0.000	ton			=	0.000	ton		
X	=	5.100	m		Y	=	0.000	:	2.000	
						=	0.000	m		

3. Load triangular

Ps2	=	0.500	x	Ysat	x	H sat^2	x	L	x	Ka
	=	0.500	x	2.000	x	0.000	x	1.000	x	0.297
	=	0.000	ton							

Ps2(v)	=	H sat-2	x	Sin(alpha)	Ps2(h)	=	H sat-2	x	Cos(alpha)	
	=	0.000	x	0.000		=	0.000	x	1.000	
	=	0.000	ton			=	0.000	ton		
X	=	5.100	m		Y	=	0.000	:	3.000	
						=	0.000	m		

4. Water

Hw = 0.000 m

Pw	=	0.500	x	Yw	x	Hw^2	x	L	
	=	0.500	x	1.000	x	0.000	x	1.000	
	=	0.000	ton						
X	=	5.100	m						
Y	=	0.000	:	3.000					
	=	0.000	m						

5. Uplife HWL

B = 5.100 m

Pu	=	Hw	x	B	x	Yw
	=	0.000	x	5.100	x	1.000
	=	0.000	ton/m'			
X	=	5.100	:	2.000		
	=	2.550	m			

Project	: Medan Flood Control	Japan International Cooperation Agency (JICA)	Calculation sheet
Channel	: Medan Flood Way		Date
Structure	: Br - F4		Nos of sheet
Station	: Fw 03 + 80		Prepared by

Earthquake Condition

II.5.3 Case - III, High Water Level

Depth of Abutment	=	7.50	m			
Surcharge load	=	0.50	t/m2			
Unit weight wet soil	=	1.85	t/m3			
Unit weight saturated soil	=	2.00	t/m3			
Unit weight of water	=	1.00	t/m3			
Width of footing						
Wf1	=	2.30	m			
Wf2	=	1.00	m			
Wf3	=	1.80	m			
W3	=	5.10	m			
Elevation of Hwl	=	31.980	m			
Elevation of Lwl	=	27.180	m			
Top slab elevation	=	39.550	m			
Depth of footing	=	1.000	m			
Elv.of base footing	=	39.550	-	7.50	=	32.050 m
Elv.of top footing	=	32.050	+	1.00	=	33.050 m
Depth of back fill	=	39.550	-	33.050	=	6.500 m

Depth of wet soil = H wet

H wet = Top elv. - Hwl elv.

H wet = 39.550 - 33.050 = 6.500 m

Depth of saturated soil = H sat

H sat = 6.50 - 6.500 = 0.000 m

A Active earth pressure

By live load

Surcharge load = (q)

q	=	0.500 t/m2	Sin(alpha)	=	0.000	
delta	=	0.000	L	=	1.000	m
alpa	=	0.000	H	=	6.500	m
Cos(alpha'	=	1.000	B	=	5.100	m

oefficient of active pressure Ke = 0.407

Pq	=	q	x	H	x	L	x	Ke
Pq	=	0.500	x	6.500	x	1.000	x	0.407
Pq	=	1.323	ton					

Pqv	=	Hq	x	Sin(alpha)	Pqh	=	Hq	x	Cos(alpha)	
	=	1.323	x	0.000		=	1.323	x	1.000	
	=	0.000	ton			=	1.323	ton		
X	=	5.100	m		Y	=	6.500	:	2.000	
						=	3.250	m		

B By earth

B-1 Wet soil

Length = 1.000 m

Hwet = 6.500 m

Hsat = 0.000 m

1. Load triangular

Pw	=	0.500	x	Ywet	x	Hwet^2	x	L	x Ke
	=	0.500	x	1.850	x	42.250	x	1.000	x 0.407
	=	15.906	ton						

Pw(v)	=	Pw	x	Sin(alpha)	Pw(h)	=	Pw	x	Cos(alpha)	
	=	15.906	x	0.000		=	15.906	x	1.000	
	=	0.000	ton			=	15.906	ton		
X	=	5.100	m		Y	=	6.500	:	3.000	+ 0.000
						=	2.167	m		

B-2 Saturated

H sat = 0.000 m

2. Load rectangular

Ps1	=	Ysat	x	H sat	x	L	x Ke
	=	2.000	x	0.000	x	1.000	x 0.407
	=	0.000	ton				

Ps1(v)	=	H sat	x	Sin(alpha)	Ps1(h)	=	H sat	x	Cos(alpha)	
	=	0.000		0.000		=	0.000	x	1.000	
	=	0.000	ton			=	0.000	ton		
X	=	5.100	m		Y	=	0.000	:	2.000	
						=	0.000	m		

3. Load triangular

Ps2	=	0.500	x	Ysat	x	H sat^2	x	L	x Ke
	=	0.500	x	2.000	x	0.000	x	1.000	x 0.407
	=	0.000	ton						

Ps2(v)	=	H sat-2	x	Sin(alpha)	Ps2(h)	=	H sat-2	x	Cos(alpha)	
	=	0.000	x	0.000		=	0.000	x	1.000	
	=	0.000	ton			=	0.000	ton		
X	=	5.100	m		Y	=	0.000	:	3.000	
						=	0.000	m		

4. Water

Hw = 0.000 m

Pw	=	0.500	x	Yw	x	Hw^2	x	L
	=	0.500	x	1.000	x	0.000	x	1.000
	=	0.000	ton					
X	=	5.100	m					
Y	=	0.000	:	3.000				
	=	0.000	m					

5. Uplife HWL

B = 5.100 m

Pu	=	Hw	x	B	x	Yw
	=	0.000	x	5.100	x	1.000
	=	0.000	ton/m'			
X	=	5.100	:	2.000		
	=	2.550	m			

Project	: Medan Flood Control	Japan International Cooperation Agency (JICA)	Calculation sheet
Channel	: Medan Flood Way		Date
Structure	: Br - F4		Nos of sheet
Station	: Fw 30 + 80		Prepared by

Earthquake Condition

II.5.4 Case - IV, Low Water Level

Depth of Abutment	=	7.50	m			
Surcharge load	=	0.50	t/m2			
Unit weight wet soil	=	1.85	t/m3			
Unit weight saturated soil	=	2.00	t/m3			
Unit weight of water	=	1.00	t/m3			
Width of footing						
Wf1	=	2.30	m			
Wf2	=	1.00	m			
Wf3	=	1.80	m			
W3	=	5.10	m			
Elevation of Hwl	=	31.980	m			
Elevation of Lwl	=	27.180	m			
Top slab elevation	=	39.550	m			
Depth of footing	=	1.000	m			
Elv.of base footing	=	39.550	-	7.50	= 32.050	m
Elv.of top footing	=	32.050	+	1.00	= 33.050	m
Depth of back fill	=	39.550	-	33.050	= 6.500	m

Depth of wet soil = H wet

H wet = Top elv. - Hwl elv.

H wet = 39.550 - 33.050 = 6.500 m

Depth of saturated soil = H sat

H sat = 6.50 - 6.500 = 0.000 m

A Active earth pressure

By live load

Surcharge load = (q)

q	=	0.500 t/m2	Sin(alpha)	=	0.000	
delta	=	0.000	L	=	1.000	m
alpa	=	0.000	H	=	6.500	m
Cos(alpha'	=	1.000	B	=	5.100	m

oefficient of active pressure Ke = 0.407

Pq	=	q	x	H	x	L	x Ke
Pq	=	0.500	x	6.500	x	1.000	x 0.407
Pq	=	1.323	ton				

Pqv	=	Hq	x	Sin(alpha)	Pqh	=	Hq	x	Cos(alpha)	
	=	1.323	x	0.000		=	1.323	x	1.000	
	=	0.000	ton			=	1.323	ton		
X	=	5.100	m		Y	=	6.500	:	2.000	
						=	3.250	m		

B By earth

B-t Wet soil

Length = 1.000 m

Hwet = 6.500 m

Hsat = 0.000 m

1. Load triangular

Pw	=	0.500	x	Ywet	x	Hwet^2	x	L	x	Ke
	=	0.500	x	1.850	x	42.250	x	1.000	x	0.407
	=	15.906	ton							

Pw(v)	=	Pw	x	Sin(alpha)	Pw(h)	=	Pw	x	Cos(alpha)	
	=	15.906	x	0.000		=	15.906	x	1.000	
	=	0.000	ton			=	15.906	ton		
X	=	5.100	m		Y	=	6.500	:	3.000	+ 0.000
						=	2.167	m		

B-2 Saturated

H sat = 0.000 m

2. Load rectangular

Ps1	=	Ysat	x	H sat	x	L	x	Ke
	=	2.000	x	0.000	x	1.000	x	0.407
	=	0.000	ton					

Ps1(v)	=	H sat	x	Sin(alpha)	Ps1(h)	=	H sat	x	Cos(alpha)	
	=	0.000		0.000		=	0.000	x	1.000	
	=	0.000	ton			=	0.000	ton		
X	=	5.100	m		Y	=	0.000	:	2.000	
						=	0.000	m		

3. Load triangular

Ps2	=	0.500	x	Ysat	x	H sat^2	x	L	x	Ke
	=	0.500	x	2.000	x	0.000	x	1.000	x	0.407
	=	0.000	ton							

Ps2(v)	=	H sat-2	x	Sin(alpha)	Ps2(h)	=	H sat-2	x	Cos(alpha)	
	=	0.000	x	0.000		=	0.000	x	1.000	
	=	0.000	ton			=	0.000	ton		
X	=	5.100	m		Y	=	0.000	:	3.000	
						=	0.000	m		

4. Water

Hw = 0.000 m

Pw	=	0.500	x	Yw	x	Hw^2	x	L		
	=	0.500	x	1.000	x	0.000	x	1.000		
	=	0.000	ton							
X	=	5.100	m							
Y	=	0.000	:	3.000						
	=	0.000	m							

5. Uplife HWL

B = 5.100 m

Pu	=	Hw	x	B	x	Yw		
	=	0.000	x	5.100	x	1.000		
	=	0.000	ton/m'					
X	=	5.100	:	2.000				
	=	2.550	m					

fh-4

Project : Medan Flood Control Channel : Medan Flood Way Structure : Br - F4 Station : 03 + 080	Japan International Cooperation agency (JICA)	Calculation sheet Date Nos of sheet Prepared by

II.6 Combined load

Normal condition

II.6.1 Case - I, High Water Level

Length	L	=	7.50	m	
Width of floting	W3	=	5.10	m	
Thick of footing	H3	=	1.00	m	

	Item	V load/m'	H load /m	Xo	Yo	V.Xo	H.Yo
	Super structure	V-sp	43.530		2.100		91.413	
	Abutment	V-abt	29.598		2.635		77.991	
	Back fill	V-bf	42.826		2.870		122.911	
			Active earth pressure					
	Surcharge load	Pq		1.930		3.250		6.273
Wet soil	triangle load	Pw		11.607		2.167		25.152
Sat.soil	rectangular load	Ps1						
	triangle load	Ps2						
	Water	Pw						
	Up life	Pu						
	Total		115.954	13.537			292.314	31.425

$$X' = \frac{Vo.Xo}{Vo\ tot} = \frac{292.314}{115.954} = 2.521\ m \qquad Y' = \frac{Ho.Yo}{Ho\ tot} = \frac{31.425}{13.537} = 2.321\ m$$

V	=	V/m'	x	L	
	=	115.95	x	7.50	
	=	869.66	ton		

H	=	H/m'	x	L	
	=	13.54	x	7.50	
	=	101.53	ton		

M = V.(X-(0.5.W)) - H.(Y-tb)

0.5 x W	=	0.50	x	5.10	
	=	2.55	m		
(X-(0.5xW))	=	2.52	-	2.55	
	=	(0.03)	m		
(Y - tb)	=	2.321	-	1.00	
	=	1.32	m		
H x (Y - tb)	=	101.53	x	1.32	
	=	134.16	t.m		

= V x (X-(0.5 x W))	-	(H x (Y-tb))			
=	869.66	x	(0.03)	-	134.16
=	(25.26)	-	134.16		
=	(159.42)	t.m			

cid-an

II.6.2 Case – II, Low Water Level

	Item	Vo/m'	Ho/m'	Xo	Yo	Vo.Xo	Ho.Yo
	Super structure	V–sp	43.530		2.100		91.413	
	Abutment	V–Abt	29.598		2.635		77.991	
	Back fill	V–bf	42.826		2.870		122.911	
			Active earth pressure					
	Surcharge load	Hq		1.930		3.250		6.273
Wet soil	triangle load	Hwet		11.607		2.167		25.152
Sat.soil	rectangular load	Hsat–1						
	triangle load	Hsat–2						
	Water	Pw						
	Up life	Pu						
	Total		115.954	13.537			292.314	31.425

$$X' = \frac{Vo.Xo}{Vo\ tot} = \frac{292.314}{115.954} = 2.521\ m \qquad Y' = \frac{Ho.Yo}{Ho\ tot} = \frac{31.425}{13.537} = 2.321\ m$$

$V = V/m' \times L = 115.95 \times 7.50 = 869.66$ ton

$H = H/m' \times L = 13.54 \times 7.50 = 101.53$ ton

$M = V \times (X-(0.5 \times W)) - (H \times (Y-tb))$

$0.5 \times W = 0.500 \times 5.10 = 2.55$ m

$(X-(0.5xW)) = 2.521 - 2.55 = (0.03)$ m

$(Y-tb) = 2.321 - 1.00 = 1.32$ m

$H \times (Y-tb) = 101.53 \times 1.32 = 134.16$ m

$= V \times (X-(0.5 \times W)) - (H \times (Y-tb))$
$= 869.66 \times (0.03) - 134.16$
$= (25.26) - 134.16$
$= (159.42)$ t.m

Earthquake condition

II.6.3 Case – III, High Water Level

Length	L	=	7.50	m
Width of floting	W3	=	5.10	m
Thick of footing	H3	=	1.00	m

	Item	V load/m'	H load /m	Xo	Yo	V.Xo	H.Yo
	Super structure	V–sp	42.530	4.490	2.100	5.560	89.313	24.964
	Abutment	V–abt	29.598	4.440	2.635	2.730	77.991	12.121
	Back fill	V–bf	42.826	6.424	2.870	3.906	122.911	25.092
			Active earth pressure					
	Surcharge load	Pq		1.323		3.250		4.300
Wet soil	triangle load	Pw		15.906		2.167		34.468
Sat.soil	rectangular load	Ps1						
	triangle load	Ps2						
	Water	Pw						
	Up life	Pu						
	Total		114.954	32.583			290.214	100.948

$$X' = \frac{Vo.Xo}{Vo\ tot} = \frac{290.214}{114.954} = 2.525\ m \qquad Y' = \frac{Ho.Yo}{Ho\ tot} = \frac{100.946}{32.583} = 3.098\ m$$

$V = V/m' \times L = 114.95 \times 7.50 = 862.16$ ton

$H = H/m' \times L = 32.58 \times 7.50 = 244.37$ ton

$M = V.(X-(0.5.W)) - H.(Y-tb)$

$0.5 \times W = 0.50 \times 5.10 = 2.55$ m

$(X-(0.5xW)) = 2.52 - 2.55 = (0.03)$ m

$(Y-tb) = 3.098 - 1.00 = 2.10$ m

$H \times (Y-tb) = 244.37 \times 2.10 = 512.72$ t.m

$= V \times (X-(0.5 \times W)) - (H \times (Y-tb))$
$= 862.16 \times (0.03) - 512.72$
$= (21.89) - 512.72$
$= (534.61)$ t.m

II.6.4 Case – IV Low Water Level

		Item	Vo/m'	Ho/m'	Xo	Yo	Vo.Xo	Ho.Yo
	Super structure	V–sp	42.530	4.490	2.100	5.560	89.313	24.964
	Abutment	V–Abt	29.598	4.440	2.635	2.730	77.991	12.121
	Back fill	V–bf	42.826	6.424	2.870	3.817	122.911	24.520
					Active earth pressure			
	Surcharge load	Hq		1.323		3.250		4.300
Wet soil	triangle load	Hwet		15.906		2.167		34.468
Sat.soil	rectangular load	Hsat–1						
	triangle load	Hsat–2						
	Water	Pw						
	Up life	Pu						
		Total	114.954	32.583			290.214	100.374

$$X' = \frac{Vo.Xo}{Vo\ tot} = \frac{290.214}{114.954} = 2.525\ m \qquad Y' = \frac{Ho.Yo}{Ho\ tot} = \frac{100.374}{32.583} = 3.081\ m$$

V = V/m' x L
= 114.95 x 7.50
= 862.16 ton

H = H/m' x L
= 32.58 x 7.50
= 244.37 ton

M = V x (X–(0.5 x W)) – (H x (Y–tb))

0.5 x W = 0.500 x 5.10
= 2.55 m

(X –(0.5xW)) = 2.525 – 2.550
= (0.03) m

(Y – tb) = 3.081 – 1.00
= 2.08 m

H x (Y – tb) = 244.37 x 2.08
= 508.43 m

= V x (X–(0.5 x W)) – (H x (Y–tb))
= 862.16 x (0.03) – 508.43
= (21.89) – 508.43
= (530.32) t.m

cld–aq

Project : Medan Flood Control Channel : Medan Flood Way Structure : Br – F 4 Station : Fw 30 + 80	Japan International Cooperation Agency (JICA)	Calculation sheet Date Nos of sheet Prepared by

Allowance stresses

Unit compersion 1 Mpa = 10.20 kg/cm2
1 kg/cm2 = 0.098 Mpa
1 k.N = 102.00 kg

A. CONCRETE

concrete cilynder charateristic at 28 daya

Allowance stress in concrete in prestressed flexural members.

a Stresses immediately after prestres transfer, (before prestress losses)

concrete K.400
f'c = 400.00 kg/cm2
= 39.22 Mpa

f'ci = 0.80 x f'c Mpa
= 0.80 . x 39.22
= 31.37 Mpa
= 31.37 x 10.20
= 320.0 kg/cm2

Extreme fiber stress in compression from ACI 318–77

fci = 0.60 x f'ci Mpa
= 0.60 x 31.37
= 18.82 Mpa
= 18.82 x 10.20
= 192.00 kg/cm2

Extreme fiber stress in tension from ACI 318–77

fti = –0.25 x @ sqrt(f'ci) Mpa
= (0.25) x 5.60
= (1.40) Mpa
= (1.40) x 10.20
= (14.28)kg/cm2

b Stresses at sercice load (after allowance for all prestres losses)

service load K.400
f'c = 400.00 kg/cm2
= 39.22 Mpa

extreem fiber stress in compression

fcs = 0.45 x fc Mpa
= 0.45 x 39.22
= 17.65 Mpa
= 17.65 x 10.20
= 180.00 kg/cm2

extreem fiber stress in tension

fts = –0.5 x @sqrt(f'c) Mpa
= (0.500) x 6.26
= (3.13) Mpa
= (3.13) x 10.20
= (31.94)kg/cm2

Modulus of elasticity

a Concrete class K.400

f'c = 400.00 kg/cm2
= 39.22 Mpa

alw–stres

a.1 Permanent load

Ec	=	Yc^1.5x(0.043x@sqrt(f'c)				
Yc	=	2,500 kg/cm2				
	=	125,000	x	0.043	x	@sqrt(f'c)
	=	5,375	x	6.262		
	=	33,659.56 Mpa				
	=	33,659.56	x	10.20		
	=	343,327.47 kg/cm2				

b.1 Temporary load

Ec	=	1.50	x	343,327
	=	514,991 kg/cm2		

b Concrete class K.350

b.1 Permanent load

f'c	=	350.00 kg/cm2				
	=	34.31 Mpa				
Ec	=	Yc^1.5x(0.043x@sqrt(f'c)				
Yc	=	2,500 kg/cm2				
	=	125,000	x	0.043	x	@sqrt(f'c)
	=	5,375	x	5.858		
	=	31,486 Mpa				
	=	31,486	x	10.20		
	=	321,153 kg/cm2				

b.2 Temporary load

Ec	=	1.50	x	321,153.44
	=	481,730 kg/cm2		

c Concrete class K.225

f'c	=	225.00 kg/cm2				
	=	22.06 Mpa				
c.1 Permanent load Ec	=	Yc^1.5x(0.043x@sqrt(f'c)				
Yc	=	2,500 kg/cm2				
	=	125,000	x	0.043	x	@sqrt(f'c)
	=	5,375	x	4.697		
	=	25,244.67 Mpa				
	=	25,244.67	x	5.86		
	=	147,878 kg/cm2				

c.2 Temporary load

Ec	=	1.50	x	147,878.00
	=	221,817 kg/cm2		

B. STEEL

Elasticity of strand (ASTM A 416)

Es	=	186,000 Mpa		
	=	186,000	x	10.20
	=	1,897,200 kg/cm2		

nominal diameter	=	12.70	mm	
nominal area	=	92.40	mm2	
	=	0.9240	cm2	

allowance stresses in prestressing tendon

grade		270		
fu	=	1,860 Mpa		
	=	1,860	x	10.20
	=	18,972 kg/cm2		
at jacking	=	0.80	x	fu
	=	0.80	x	18,972
	=	15,178 kg/cm2		

after tranfer	=	0.70	x	fu
	=	0.70	x	18,972
	=	13,280 kg/cm2		
effective presttressing	=	0.60	x	fu
	=	0.60	x	18,972
	=	11,383 kg/cm2		
Breaking load	=	As	x	fu
	=	0.924	x	18,972
	=	17,530 kg/cm2		
	=	171.86 kN		
say	=	172 kN		

Jacking forces

nos of strand	area of strand cm2	allowance stress of strand kg/cm2	jacking forces kg
1.00	0.9240	15,178	14,024
2.00	0.9240	15,178	28,048
3.00	0.9240	15,178	42,072
4.00	0.9240	15,178	56,096
5.00	0.9240	15,178	70,121
6.00	0.9240	15,178	84,145
7.00	0.9240	15,178	98,169
8.00	0.9240	15,178	112,193
9.00	0.9240	15,178	126,217
10.00	0.9240	15,178	140,241

alw-stres

PRESTRESSED CONCRETE BRIDGE COMPUTATION

CHANNEL MEDAN FLOOD WAY

Br – Mf 4

Station : Fw 30 + 80

span
31.00

III FOUNDATION

Pile for Abutment

- III.1 Charateristic of pile
  - III.1.1 Normal condition
  - III.1.2 Earthquake condition
- III.2 Axial bearing load allowance for a pile
- III.3 Spring constant of a pile
  - III.3.1 Normal condition
  - III.3.2 Earthquake condition
- III.4 Displacement of a head pile
  - III.4.1 Normal condition
  - III.4.2 Earthquake condition
- III.5 Coeficient displacement of footing
  - III.5.1 Case – I,Normal condition (HWL)
  - III.5.2 Case – II,Normal condition (LWL)
  - III.5.3 Case – III,Earthquake condition (HWL)
  - III.5.4 Case – IV,Earthquake condition (LWL)
- III.6 Forces at the i–th pile head
  - III.6.1 Case – I,Normal condition (HWL)
  - III.6.2 Case – II,Normal condition (LWL)
  - III.6.3 Case – III,Earthquake condition (HWL)
  - III.6.4 Case – IV,Earthquake condition (LWL)
- III.7 Control stresses on a head pile
  - III.7.1 Normal condition
  - III.7.2 Earthquake condition
- III.8 Combined load at Abutment section
  - III.8.1 Case – I,Normal condition (HWL)
  - III.8.2 Case – II,Normal condition (LWL)
  - III.8.3 Case – III,Earthquake condition (HWL)
  - III.8.4 Case – IV,Earthquake condition (LWL)
- III.9 Resume Load on Abutment Section
- III.10 Reinforcing steel bar

Project : Medan Flood Control Channel : Medan Flood Way Structure : Br – F4 Station : Fw 30 + 80	Japan International Cooperation Agency (JICA)	Calculation sheet Date Nos of sheet Prepared by

III.1 Pile of Left side Abutment

III.1.1 Charateristic of steel pipe pile

Normal condition

t' = thick of steel pipe corrotion,
do = outer diameter of steel pipe
t = thick of steel pipe after corrosion
di = Inner diameter of steel pipe
Beta = characteristic value of pile
d = outside diameter of pile before corrotion
de = outside diameter of pile after corrotion
delta = the standard amount of displacement (cm)
k = coefficuent of horizontal subgrade reaction (kg/cm2)
Eo = modulus of deformation of the ground obtained from table 3.5

Inersia

Ic = Inersia concrete
Is = Inersia steel

Modulus elasticyty

Es = pile/steel
Ec = concrete

thick of corosion = t' = 0.100 x 1.0310 = 0.1031 cm
normal thick = te = 1.031 – 0.1031 = 0.9279 cm

de effective = do – 2 x te
de = 40.00 – 2.00 x 0.9279
= 40.00 – 1.86
= 38.14 cm
di = (de – (2 x t) cm
= 38.14 – 2.00 x 0.93
= 38.14 – 1.86
= 36.29 cm
de^4 = 2,116,967 cm4
di^4 = 1,734,089 cm4
de^4 – di^4 = 2,116,967 – 1,734,089
= 382,878 cm4

$$Beta = \left(\frac{kh.de}{4.E.I}\right)^{0.25}$$

kho = 1/30 x alpa x Eo
Alpha = 0.20 from table 3.5
Eo = 28 x N
= 28.00 x 10.00
= 280 kg/cm3

Permanent load

Ec (K–225) = 147,878 kg/cm2
Es = 1,897,200 kg/cm2

$$1/n = \frac{147,878}{1,897,200} = 0.0779$$

bc = @pi/64 x de^4 x 1/n
= 0.05 x 2,116,967 x 0.07795
= 8,100 cm^4

bs = @pi/64 x (de^4 – di^4)
= 0.05 x 382,878
= 18,794 cm4

chars–n

Ix tot.	=	bc	+	bs			
	=	8,100	+	18,794			
	=	26,894	cm2				
E.I	=	1,897,200	x	26,894			
	=	51,023,849,328	kg.cm2				
4.E.I	=	4	x	51,023,849,328			
	=	204,095,397,313	kg.cm2				
kho	=	1/30	x	Alpa	x	Eo	
	=	0.03	x	1	x	280	
	=	9.33	kg/cm3				

kh = kho x {(Bh) / 30 }^−0.75 (1)------- equition

Bh = @sqrt (de / Beta)

de		38.1442	
-----	=	----------	= 7,170.11
Beta		0.005320	------>>>>>Beta find by trial

Bh	=	84.68	
		84.68	
Bh / 30	=	----------	= 2.82
		30.00	
(Bh / 30)^−0.75	=	0.46	

kh	=	9.33	x	0.46
	=	4.2860		

$$Beta = \left(\frac{kh \times de}{4.EI}\right)^{0.25} \quad (2)\text{-----equition}$$

$$kh = \frac{Beta^4 \times 4.EI}{de}$$

$$kh = \frac{8.009596E-10}{38.1442} \times 204,095,397,313$$

------ (1) = ------ (2)

4.2860	=	4.2856 kg/cm3

By trial method, kh left side equal to kh right side

kh	=	4,285.64	ton / m3
Beta	=	0.005320	cm−1
Beta	=	0.531989	m−1
kh.D	=	4.29	x 38.14
	=	163.47	kg/cm2

Allowance Horizontal Force

$$Han = \frac{kh.D}{Beta} \times delta$$

$$Han = \frac{163.47}{0.01} \times 1.00$$

	=	30,726	kg
	=	30.726	ton

chars−n

Project	: Medan Flood Control	Japan International Cooperation Agency (JICA)	Calculation sheet
Channel	: Medan Flood Way		Date
Structure	: Br − F4		Nos of sheet
Station	: Fw 30 + 80		Prepared by

III.2 Axial bearing load allowable for a pile

do	=	outer diameter of a pile (cm)				
di	=	inner diameter of a pile (cm)				
t	=	normal thick				
te	=	effective thick				
t'	=	corrosion thick				
de	=	dia. effective				
Apl	=	area of a pile (cm2)				
Lp	=	Length of pile				
d	=	40.64	cm			
t	=	1.031	cm			
t'	=	0.10 x t				
	=	0.10	x	1.0310		
	=	0.1031	cm			
te	=	t − t'				
	=	1.0310	−	0.1031		
	=	0.9279	cm			
de	=	do − 2 x te				
	=	40.64	−	1.86		
	=	38.78	cm			
re	=	0.1939	m			
di	=	(de − (2 x te)	cm			
	=	38.78	−	1.856		
	=	36.93	cm			
de^2	=	1504.21	cm2			
di^2	=	1,363.7067	cm2			
de^2−di^2	=	1,504.2142	−	1363.71		
	=	140.5074	cm2			
	=	0.0141	m2			
	=	0.25	x	3.14	x(de^2 − di^2)	
	=	0.25	x	3.14	x 140.51	
	=	110.35	cm2			
	=	0.0110	m2			

Modulus Elasticity

E pile	=	1,897,200	kg/cm2
	=	18,972,000	t/m2
Ec (K = 225)			
E concrete	=	147,878	kg/cm2
	=	1,478,780	t/m2

$$l/n = \frac{Ec}{Ep} = \frac{147,878}{1,897,200} = 0.0779$$

di−transforme	=	d t		
dt	=	di x l/n		
	=	36.93	x	0.0779
	=	2.8784	cm	
dt^2	=	8.2852	cm2	
de^2 − dt^2	=	1504.21	−	8.29
	=	1495.93		

Ap2	=	@pi/64 x (de^2−(dt)^2)			
	=	0.25	x	3.14	x 1,495.93
pn−alw	=	1,174.90	cm2		
	=	0.1175	m2		

axl−alw

Ap	=	Ap1	+	Ap2
	=	0.0110	+	0.1175
	=	0.1285	m2	
Lp	=	18.50	m	
N1	=	50.00		
N	=	40.00		

N – value of embedded

N–value top	bot.	Elv. top	Elv. bot.	avrg depth	tot depth	avrg N–value	tot. N–value	Kind of soils	soil frictio (t/m2)	li x fi
5.00	1.00	33.390	32.390	1.00	1.00	3.00	3.00	fine sand	6.80	6.80
1.00	6.00	32.390	31.390	1.00	2.00	3.50	3.50	do	6.80	6.80
6.00	23.00	31.390	30.390	1.00	3.00	14.50	14.50	do	6.80	6.80
23.00	16.00	30.390	29.390	1.00	4.00	19.50	19.50	do	6.80	6.80
16.00	9.00	29.390	28.390	1.00	5.00	12.50	12.50	silty sand	3.30	3.30
9.00	12.00	28.390	27.390	1.00	6.00	10.50	10.50	do	3.30	3.30
12.00	16.00	27.390	26.390	1.00	7.00	14.00	14.00	do	3.30	3.30
16.00	16.00	26.390	25.390	1.00	8.00	16.00	16.00	do	3.30	3.30
16.00	14.00	25.390	24.390	1.00	9.00	15.00	15.00	fine sand	6.80	6.80
14.00	34.00	24.390	23.390	1.00	10.00	24.00	24.00	do	6.80	6.80
34.00	47.00	23.390	22.390	1.00	11.00	40.50	40.50	do	6.80	6.80
47.00	50.00	22.390	21.390	1.00	12.00	48.50	48.50	do	6.80	6.80
50.00	38.00	21.390	20.390	1.00	13.00	44.00	44.00	do	6.80	6.80
38.00	19.00	20.390	19.390	1.00	14.00	28.50	28.50	do	6.80	6.80
19.00	18.00	19.390	18.390	1.00	15.00	18.50	18.50	do	6.80	6.80
18.00	22.00	18.390	17.390	1.00	16.00	20.00	20.00	do	6.80	6.80
22.00	52.00	17.390	16.390	1.00	17.00	37.00	37.00	do	6.80	6.80
52.00	57.00	16.390	15.390	1.00	18.00	54.50	54.50	do	6.80	6.80
			sum	18.00					108.40	108.40

Material is fine sand

$$N = \frac{N1 + N2'}{2}$$

N2' = mean N–value in the range from the tip of the pile to 4 x D above.

4.D	=	4.00	x	0.4064	=	1.6256	m
N2'	=	(22+57)/2					
	=	39.50					
N	=	$\frac{50.00 + 39.50}{2}$					
	=	44.75	> 40				
	=	40					

Ru = Ultimate bearing capacity of the pile

li = statum thickness with the skin friction power taken into account (m)

fi = maximum unit area skin friction power of statum with the skin friction power taken into account (t/m2)

4.D	=	4.00	x	0.3878	=	1.55	m
l	=	0.50	x	1.55	=	0.78	m
l/D	=	0.78	:	0.39	=	2.00	
qd/N	=	8.00					
qd	=	8.00	x	N			
	=	8.00	x	40.00			
	=	320.00	ton/m2				
qd.Ap	=	320	x	0.1285			
	=	41.13	ton				
U	=	2 x @pi x re					
	=	2.00	x	3.14	x	0.1939	
	=	1.22	m				
Ru	=	qd.A + U.(total li.fi)					
	=	41.13	+	1.22	x	108.40	
	=	173.207	ton				

Le	=	Length of pile filled by concrete							
	=	5.55	m						
Y soil	=	2.00	t/m3						

Ws = Effective weight of soil which replace by pile

	=	0.25	x	@pi	x	de^2	x	Le	Ysoil
	=	0.25	x	3.14	x	0.15	x	18.50	x 2.00
	=	4.37	ton						

W = Effective weight of concrete which filled in the pile

	=	0.25		@pi		di^2		Le	Y concrete
	=	0.25	x	3.14	x	0.1364	x	18.50	x 2.50
	=	4.95	ton						

Force bearing capacity of a pile in Pier

Permanent load safety factor Sn = 3.00

Temporary load safety factor Sq = 2.00

Case – I, Normal Condition

$$Ran = \frac{1}{Sn} \times (Ru - Ws) + Ws - W$$

	=	1.00/3.00	x(	173.21	–	4.37	)+	4.37	– 4.95
	=	0.33	x(	168.84	)+	–0.58			
	=	56.28	+	–0.58					
	=	55.70	ton/nos						

by material of pile

Rp	=	Ap l x fs	=	110.35	x	1.400	=	154.496	kg
Rp	=	154.50	ton						

R minimum = 55.70 ton

Case – II, Earthquake Condition

$$Raq = \frac{1.00}{2.00} \times (173.21 - 4.37) + 4.37 - 4.95$$

	=	0.50	x(	168.84	) +	–0.58			
	=	84.42	+	–0.58					
	=	83.84	ton/nos						

Case		V ton	H ton	M ton.m	Allowance bearing pile Vertical	Allowance bearing pile Horizontal	Nos of pile Vertical	Nos of pile Horizontal
		Normal condition						
case – I	Hwl	821.29	87.99	–166.17	55.70	31.66	14.75	2.78
case – II	Lwl	821.29	87.99	–166.17	55.70	31.66	14.75	2.78
		Earthquake condition						
case – III	Hwl	821.29	190.01	480.68	83.84	32.69	9.80	5.81
case – IV	Lwl	821.29	190.01	480.68	83.84	32.69	9.80	5.81

Project : Medan Flood Control Channel : Medan Flood Way Structure : Br – F4 Station : Fw 30 + 80	Japan International Cooperation Agency (JICA)	Calculation sheet Date Nos of sheet Prepared by

III.1.2 Earthquake condition

t' = thick of steel pipe corrotion,
do = outer diameter of steel pipe
t = thick of steel pipe after corrosion
di = inner diameter of steel pipe
Beta = characteristic value of pile
d = outside diameter of pile before corrotion
de = outside diameter of pile after corrotion
delta = the standard amount of displacement (cm)
k = coefficuent of horizontal subgrade reaction (kg/cm2)
Eo = modulus of deformation of the ground obtained from table 3.5

Inersia

Ic = Inersia concrete
Is = Inersia steel

Modulus elasticyty

Es = pile/steel
Ec = concrete

thick of corosion = t' = 0.100 x 1.0310 = 0.1031 cm
normal thick = te = 1.031 – 0.1031 = 0.9279 cm

de effective = do – 2 x te
de = 40.00 – 2.00 x 0.9279
= 40.00 – 1.86
= 38.14 cm

di = (de – (2 x t) cm
= 38.14 – 2.00 x 0.93
= 38.14 – 1.86
= 36.29 cm

de^4 = 2,116.967 cm4
di^4 = 1,734.089 cm4
de^4 – di^4 = 2,116.967 – 1,734.089
= 382.878 cm4

(kh.de)
Beta = (----------)^0.25
4.E.I

kho = 1/30 x alpa x Eo
Alpha = 0.20 from table 3.5
Eo = 28 x N
= 28.00 x 10.00
= 280 kg/cm3

Temporary load
Ec (K=225) = 221,817 kg/cm2
Es = 1,897,200 kg/cm2

1/n = 221,817 / 1,897,200
= 0.1169

bc = @pi/64 x de^4 x 1/n
= 0.05 x 2,116.967 x 0.11692
= 12.150 cm^4

bs = @pi/64 x (de^4 – di^4)
= 0.05 x 382.878
= 18.794 cm4

bx tot. = bc + bs
= 12.150 + 18.794
= 30.944 cm2

E.I = 1,897,200 x 30.944
= 58,707,321,359 kg.cm2

4.E.I = 4.00 x 58,707,321,359
= 234,829,285,436 kg.cm2

kho = 1/30 x Alpa x Eo
= 0.03 x 1 x 280
= 9.33 kg/cm3

kh = kho x ((Bh) / 30)^–0.75 (1)------ equition

Bh = @sqrt (de / Beta)

de / Beta = 38.1442 / 0.005116 = 7,452.77 ------>>>>>Beta find by trial

Bh = 86.33
86.33

Bh / 30 = 86.33 / 30.00 = 2.88

(Bh / 30)^–0.75 = 0.45

kh = 9.33 x 0.45
= 4.2243

Beta = (kh x de / 4.EI)^0.25 (2)------ equition

kh = Beta^4 x 4.EI / de

kh = 6.86E–10 / 38.1442 x 234,829,285,436

------ (1) = ------ (2)

4.2243 = 4.2244 kg/cm3

By trial method, kh left side equal to kh right side

kh = 4,224.43 ton / m3
Beta = 0.005116 cm–1
Beta = 0.511813 m–1
kh.D = 4.22 x 38.14
= 161.14 kg/cm2

Allowance Horizontal Force

Haq = kh.D / Beta x delta
= 161.14 / 0.00512 x 1.00
= 31,484 kg
= 31.484 ton

Project	: Medan Flood Control	Japan International Cooperation Agency (JICA)	Calculation sheet	
Channel	: Medan Flood Way		Date	
Structure	: Br – F4		Nos of sheet	
Station	: Fw 30 + 80		Prepared by	

III.3 Spring Constante of steel pipe pile

III.3.1 Normal condition

h = axial length of pile above the design groung surface
Beta = charateristic value of pile
k = coeficient of horozontal sub grade reaction (kg/cm^2)
IE = flexural rigidity of pile
K1,K2,K3&K4 = spring constante
Kv = Axial force (axial spring constante)
t = thick of steel pipe before corrotion (cm)
t' = thick of steel pipe corrosion (cm)
te = thick of steel pipe after corrosion (cm)

d	=	40.64	cm	
t	=	1.031	cm	
t'	=	0.103	cm	
te	=	1.0310	–	0.1031
	=	0.9279	cm	
de	=	d	–	2 x te
	=	40.64	–	1.8558
	=	38.78	cm	
de^2	=	1,504.21	cm2	
di	=	(de – (2 x te)	cm	
	=	38.78	–	1.8558
	=	36.93	cm	
di^2	=	1,363.71	cm2	
de^2 – di^	=	1,504.21	–	1,363.71
	=	140.51	cm2	
de^4	=	2,262,660	cm4	
di^4	=	1,859,696	cm4	
de^4 – di^4	=	2,262,660	–	1,859,696
	=	402,964	cm4	

Modulus Elasticity

Permanent load

Ec (K–225)	=	147,878	kg/cm2	
Es	=	1,897,200	kg/cm2	
		147,878		
1/n	=	----	=	0.0779
		1,897,200		
dt	=	di x 1/n		
	=	36.9284	x	0.0779
	=	2.8784	cm	
dt^2	=	8.2852	cm2	

I1	=	@pi/64 x (dt^4)		
	=	0.0491	x	69
	=	3.37	cm^4	
I2	=	@pi/64 x (de^4 – di^4)		
	=	0.04909	x	402,964
	=	19,780	cm4	
I tot.	=	I1	+	I2
	=	3.3696	+	19,780.48
	=	19,783.83	cm4	
	=	0.00019783	m4	

ks–n

4 - 571

As1	=	1/4 x 3.14 x dt^2				
	=	0.25	x	3.14	x	8.29
	=	6.51	cm2			
As2	=	1/4.3.14.(de^2–di^2)				
	=	0.25	x	3.14	x	140.51
	=	110.35	cm2			
A tot.	=	As1	+	As2		
	=	6.51	+	110.35		
	=	116.86	cm2			
	=	0.01168614	m2			
Lp	=	18.50	m			

$$Kv = a \times \frac{A\,tot.}{Lp} \times Ep$$

$$a = 0.027 \times \frac{Lp}{de} + 0.2$$

$$= 0.027 \times \frac{1,850.00}{38.7842} + 0.2$$

$$= 1.28790 + 0.2000$$

$$= 1.4879$$

Spring constante on axial force = Kv

$$Kv = a \times \frac{A\,tot. \times Epile}{Lp}$$

$$= 1.49 \times \frac{117 \times 1,897,200}{1,850}$$

$$= 1.49 \times 119,843$$

	=	178,314	kg/cm	
	=	17,831	ton/m	
EI	=	1,897,200	x	19,784
	=	3.75E+10	kg.cm2	
	=	3,753	t.m2	
2.EI	=	2.00	x	3.75E+03
	=	7,507	t.m2	
4.EI	=	4	x	3,753
	=	15,014	t.m2	
Beta	=	0.00532	cm–1	
Beta	=	0.5320	m–1	

Spring constante K1, K2 and K3

K1	=	4.EI.Beta^3		
	=	1.50E+04	x	0.15056876
	=	2,261	t/m	
K2=K3	=	2.EI.Beta^2		
	=	7,507	x	0.283024
	=	2,125	t/rad	
K4	=	2.EI.Beta		
	=	7,506.78	x	0.532
	=	3,994	t.m/rad	

ks–n

Project	: Medan Flood Control	Japan International Cooperation Agency (JICA)	Calculation sheet
Channel	: Percut River		Date
Structure	: Br. F – 4		Nos of sheet
Station	: Fw 30 + 80		Prepared by

B1.3.2 Earthquake condition

h	=	axial length of pile above the design groung surface
Beta	=	charateristic value of pile
k	=	coeficient of horozontal sub grade reaction (kg/cm^2)
IE	=	flexural rigidity of pile
K1,K2,K3&K	=	spring constante
Kv	=	Axial force (axial spring constante)
t	=	thick of steel pipe before corrotion (cm)
t'	=	thick of steel pipe corrosion (cm)
te	=	thick of steel pipe after corrosion (cm)

d	=	40.64 cm	
t	=	1.031 cm	
t'	=	0.103 cm	
te	=	1.0310 –	0.1031
	=	0.9279 cm	
de	=	d – 2 x te	
	=	40.64 –	1.8558
	=	38.78 cm	
de^2	=	1,504.21 cm2	
di	=	(de – (2 x te) cm	
	=	38.78 –	1.8558
	=	36.93 cm	
di^2	=	1,363.71 cm2	
de^2 – di^	=	1,504.21 –	1,363.71
	=	140.51 cm2	
de^4	=	2,262,660 cm4	
di^4	=	1,859,696 cm4	
de^4– di^	=	2,262,660 –	1,859,696
	=	402,964 cm4	

Modulus Elasticity

Temporary load

Ec (K-225)	=	221,817 kg/cm2
Es	=	1,897,200 kg/cm2

$$1/n = \frac{221{,}817}{1{,}897{,}200} = 0.1169$$

dt	=	di x 1/n	
	=	36.9284 x	0.1169
	=	4.3176 cm	
dt^2	=	18.6417 cm2	
I1	=	@pi/64 x (dt^4)	
	=	0.0491 x	348
	=	17.06 cm^4	
I2	=	@pi/64 x (de^4 – di^4)	
	=	0.04909 x	402,964
	=	19,780 cm4	
I tot.	=	I1 +	I2
	=	17 +	19,780.46
	=	19,797.52 cm4	
	=	0.00019797 m4	
As1	=	1/4 x 3.14 x dt^2	
	=	0.25 x	3.14 x 18.64
	=	14.64 cm2	

ks-q

As2	=	1/4.3.14.(de^2–di^2)
	=	0.25 x 3.14 x 140.51
	=	110.35 cm2
A tot.	=	As1 + As2
	=	14.64 + 110.35
	=	125.00 cm2
	=	0.01249954 m2
Lp	=	18.50 m

$$Kv = a \times \frac{A\,tot.}{Lp} \times Ep$$

$$a = 0.027 \times \frac{Lp}{de} + 0.2$$

$$= 0.027 \times \frac{1{,}850.00}{38.78} + 0.2$$

	=	1.28790 + 0.2000
	=	1.4879

Spring constante on axial force = Kv

$$Kv = a \times \frac{A\,tot. \times Epile}{Lp}$$

$$= 1.49 \times \frac{125.00 \times 1{,}897{,}200}{1{,}850}$$

	=	1.49 x 128,164
	=	190,725.12 kg/cm
	=	19,073 ton/m
EI	=	1,897,200 x 19,798
	=	3.76E+10 kg.cm2
	=	3,756 t.m2
2.EI	=	2 x 3.76E+03
	=	7,512 t.m2
4.EI	=	4 x 3,756
	=	15,024 t.m2
Beta	=	0.00511813 cm–1
Beta	=	0.511813 m–1

Spring constante K1,K2 and K3

K1	=	4.EI.Beta^3
	=	1.50E+04 x 0.1340707
	=	2,014 t/m
K2=K3	=	2.EI.Beta^2
	=	7,512 x 0.2619525
	=	1,968 t/rad
K4	=	2.EI.Beta
	=	7,511.97 x 0.511813
	=	3,845 t.m/rad

ks-q

Project : Medan Flood Control	Japan International Cooperation Agency (JICA)	Calculation sheet
Channel : Medan Flood Way		Date
Structure : Br – F4		Nos of sheet
Station : Fw 30 + 80		Prepared by

Left Side Abutment

III.4 Displacement of head pile

III.4.1 Normal Condition

Axx = tot.(K1 x cos^2 e + Kv x sin ^2 e)
Axy = tot.(Kv – K1) x sin e x cos e)
Ayx = tot.(Kv – K1) x sin e x cos e)
Axa = tot.(KV – K1) x Xi x (sin e x cos e) – (K2 x cos e))
Aax = tot.(KV – K1) x Xi x (sin e x cos e) – (K2 x cos e))
Ayy = tot.(KV x cos ^2 e + (K1 x sin^2 e))
Aya = tot.(KV x cos ^2 e + K1 x sin^2 e) x Xi + K2 x sin e)
Aay = tot.(KV x cos ^2 e + K1 x sin^2 e) x Xi + K2 x sin e)
Aaa = tot.(KV x cos ^2 e + K1 x sin^2 e) x Xi^2 ^+ (K2 + K3).Xi sin e + K4)

Abutment		Rows				Total
Nos. of row		(1)	(2)	(3)	(4)	
side		L/s	L/s	R/s	R/s	
sign		(–)	(–)	(+)	(+)	
angle		< 0	< 0	> 0	> 0	
Xi	=	(1.875)	(0.625)	0.625	1.875	
n	=	6.00	6.00	6.00	6.00	
angle degree	=	0.0000	0.0000	0.0000	5.71	
sin e	=	0.0000	0.00	0.00	0.10	
cos e	=	1.0000	1.0000	1.0000	0.9950	
sin e x cose	=	0.0000	0.00	0.00	0.10	
sin^2 e	=	0.0000	0.00	0.00	0.01	
cos^2 e	=	1.0000	1.0000	1.0000	0.9901	
Xi^2	=	3.5156	0.3906	0.3906	3.5156	
K1	=	2,261	2,261	2,261	2,261	
K2	=	2,125	2,125	2,125	2,125	
K3	=	2,125	2,125	2,125	2,125	
K4	=	3,994	3,994	3,994	3,994	
Kv	=	17,831	17,831	17,831	17,831	
n.K1	=	13,566	13,566	13,566	13,566	
n.K2	=	12,750	12,750	12,750	12,750	
n.K3	=	12,750	12,750	12,750	12,750	
n.K4	=	23,964	23,964	23,964	23,964	
n.Kv	=	106,986	106,986	106,986	106,986	
n.(K2 + K3)	=	25,500	25,500	25,500	25,500	
Xi.(n.(K2 + K3))	=	(47,813)	(15,938)	15,938	47,813	
Xi.(n.(K2 + K3)).sin e	=	0	0	0	4,757	
n.(Kv–K1)	=	93,420	93,420	93,420	93,420	
n.(Kv–K1).sin e.cose	=	0	0	0	9,249	
n.K1.cos^2 e	=	13,566	13,566	13,566	13,432	
n.Kv.sin^2 e	=	0	0	0	1,059	
n.Kv.cos^2 e	=	106,986	106,986	106,986	105,927	
n.K1.sin^2 e	=	0	0	0	134	
n.K1.sin e.cose	=	0	0	0	1,343	
n.Kv.sin e.cose	=	0	0	0	10,592	
Xi.(n.K1.sin e.cos e)	=	0	0	0	2,518	
Xi.(n.Kv.sin e.cos e)	=	0	0	0	19,859	
n.K2.cos e	=	12,750	12,750	12,750	12,687	
n.K2.sin e	=	0	0	0	1,269	
n.K3.sin e	=	0	0	0	1,269	
Xi.(n.Kv.cos ^2 e)	=	(200,599)	(66,866)	66,866	198,613	
Xi.(n.K1.sin^2 e)	=	0	0	0	252	
Xi^2.(n.Kv.cos ^2 e)	=	376,123	41,791	41,791	372,399	
Xi^2.(n.K1.sin^2 e)	=	0	0	0	472	
Xi.(n.K2.sin e)	=	0	0	0	2,379	
Xi.(n.K3.sin e)	=	0	0	0	2,379	

Axx = tot.(K1 x cos^2 e + Kv x sin ^2 e)

n.K1.cos^2 e	=	13,566	13,566	13,566	13,432	
n.Kv.sin^2 e	=	0	0	0	1,059	
total		13,566	13,566	13,566	14,491	55,189

Axy = tot.(Kv – K1) x sin e x cos e)

n.(Kv–K1).sin e.cose	=	0	0	0	9,249	
A xy	=	0	0	0	9,249	9,249
A yx	=	0	0	0	9,249	9,249

Axa = tot.(KV – K1) x Xi x (sin e x cos e) – (K2 x cos e))

Xi.(n.(Kv – K1).sin e.cos e)	=	0	0	0	17,341	
– n.K2.cos e	=	(12,750)	(12,750)	(12,750)	(12,687)	
Axa		(12,750)	(12,750)	(12,750)	4,654	(33,596)
Aax	=	(12,750)	(12,750)	(12,750)	4,654	(33,596)

Ayy = tot.(KV x cos ^2 e + (K1 x sin^2 e))

n.Kv.cos ^2 e	=	106,986	106,986	106,986	105,927	
n.K1.sin^2 e	=	0	0	0	134	
Ayy		106,986	106,986	106,986	106,061	427,019

Aya = tot.(KV x cos ^2 e + K1 x sin^2 e) x Xi + K2 x sin e)

Xi.(n.Kv.cos ^2 e)	=	(200,599)	(66,866)	66,866	198,613	
Xi.(n.K1.sin^2 e)	=	0	0	0	252	
n.K2.sin e	=	0	0	0	1,269	
Aya	=	(200,599)	(66,866)	66,866	200,133	(465)
Aay	=	(200,599)	(66,866)	66,866	200,133	(465)

Aaa = tot.(KV x cos ^2 e + K1 x sin^2 e) x Xi^2 ^+ (K2+K3) Xi sin e + K4)

Xi^2.(n.Kv.cos ^2 e)	=	376,123	41,791	41,791	372,399	
Xi^2.(n.K1.sin^2 e)	=	0	0	0	472	
n.(K2+K3).Xi.sin e	=	0	0	0	4,757	
n.K4	=	23,964	23,964	23,964	23,964	
Aaa		400,087	65,755	65,755	401,593	933,190

coe-disn

coe-disn

Project : Medan Flood Control Channel : Medan Flood Way Structure : Br – F4 Station : Fw 30 + 80	Japan International Cooperation Agency (JICA)	Calculation sheet Date Nos of sheet Prepared by

Left Side Abutment
III.4.2 Earthquake Condition

Axx = tot.(K1 x cos^2 e + Kv x sin ^2 e)
Axy = tot.(Kv – K1) x sin e x cos e)
Ayx = tot.(Kv – K1) x sin e x cos e)
Axa = tot.(KV – K1) x Xi x (sin e x cos e) – (K2 x cos e))
Aax = tot.(KV – K1) x Xi x (sin e x cos e) – (K2 x cos e))
Ayy = tot.(KV x cos ^2 e + (K1 x sin ^2 e))
Aya = tot.(KV x cos ^2 e + K1 x sin ^2 e) x Xi + K2 x sin e)
Aay = tot.(KV x cos ^2 e + K1 x sin ^2 e) x Xi + K2 x sin e)
Aaa = tot.(KV x cos ^2 e + K1 x sin ^2 e) x Xi ^2 ^ + (K2 + K3) Xi sin e + K4)

Abutment		Rows				Total
Nos. of row		(1)	(2)	(3)	(4)	
side		L/s	L/s	R/s	R/s	
sign		(–)	(–)	(+)	(+)	
angle		< 0	< 0	> 0	> 0	
Xi	=	(1.875)	(0.625)	0.625	1.875	
n	=	6.00	6.00	6.00	6.00	
angle degree	=	0.0000	0.0000	0.0000	5.71	
sin e	=	0.0000	0.00	0.00	0.10	
cos e	=	1.0000	1.0000	1.0000	0.9950	
sin e x cose	=	0.0000	0.00	0.00	0.10	
sin^2 e	=	0.0000	0.00	0.00	0.01	
cos^2 e	=	1.0000	1.0000	1.0000	0.9901	
Xi^2	=	3.5156	0.3906	0.3906	3.5156	
K1	=	2,014	2,014	2,014	2,014	
K2	=	1,968	1,968	1,968	1,968	
K3	=	1,968	1,968	1,968	1,968	
K4	=	3,845	3,845	3,845	3,845	
Kv	=	19,073	19,073	19,073	19,073	
n.K1	=	12,084	12,084	12,084	12,084	
n.K2	=	11,808	11,808	11,808	11,808	
n.K3	=	11,808	11,808	11,808	11,808	
n.K4	=	23,070	23,070	23,070	23,070	
n.Kv	=	114,438	114,438	114,438	114,438	
n.(K2 + K3)	=	23,616	23,616	23,616	23,616	
Xi.(n.(K2 + K3))	=	(44,280)	(14,760)	14,760	44,280	
Xi.(n.(K2 + K3)).sin e	=	0	0	0	4,406	
n.(Kv–K1)	=	102,354	102,354	102,354	102,354	
n.(Kv–K1).sin e.cose	=	0	0	0	10,133	
n.K1.cos^2 e	=	12,084	12,084	12,084	11,964	
n.Kv.sin^2 e	=	0	0	0	1,133	
n.Kv.cos^2 e	=	114,438	114,438	114,438	113,305	
n.K1.sin^2 e	=	0	0	0	120	
n.K1.sin e.cose	=	0	0	0	1,196	
n.Kv.sin e.cose	=	0	0	0	11,329	
Xi.(n.K1.sin e.cos e)	=	0	0	0	2,243	
Xi.(n.Kv.sin e.cos e)	=	0	0	0	21,243	
n.K2.cos e	=	11,808	11,808	11,808	11,749	
n.K2.sin e	=	0	0	0	1,175	
n.K3.sin e	=	0	0	0	1,175	
Xi.(n.Kv.cos ^2 e)	=	(214,571)	(71,524)	71,524	212,447	
Xi.(n.K1.sin^2 e)	=	0	0	0	224	

coe–disq

Xi^2.(n.Kv.cos ^2 e)	=	402,321	44,702	44,702	398,339	
Xi^2.(n.K1.sin^2 e)	=	0	0	0	421	
Xi.(n.K2.sin e)	=	0	0	0	2,203	
Xi.(n.K3.sin e)	=	0	0	0	2,203	
Axx = tot.(K1 x cos^2 e + Kv x sin ^2 e)						
n.K1.cos^2 e	=	12,084	12,084	12,084	11,964	
n.Kv.sin^2 e	=	0	0	0	1,133	
total		12,084	12,084	12,084	13,097	49,349
Axy = tot.(Kv – K1) x sin e x cos e)						
n.(Kv–K1).sin e.cose	=	0	0	0	10,133	
A xy	=	0	0	0	10,133	10,133
A yx	=	0	0	0	10,133	10,133
Axa = tot.(KV – K1) x Xi x (sin e x cos e) – (K2 x cos e))						
Xi.(n.(Kv – K1).sin e.cos e)	=	0	0	0	18,999	
– n.K2.cos e	=	(11,808)	(11,808)	(11,808)	(11,749)	
Axa		(11,808)	(11,808)	(11,808)	7,250	(26,174)
Aax	=	(11,808)	(11,808)	(11,808)	7,250	(26,174)
Ayy = tot.(KV x cos ^2 e + (K1 x sin ^2 e))						
n.Kv.cos ^2 e	=	114,438	114,438	114,438	113,305	
n.K1.sin^2 e	=	0	0	0	120	
Ayy		114,438	114,438	114,438	113,425	456,739
Aya = tot.(KV x cos ^2 e + K1 x sin ^2 e) x Xi + K2 x sin e)						
Xi.(n.Kv.cos ^2 e)	=	(214,571)	(71,524)	71,524	212,447	
Xi.(n.K1.sin ^2 e)	=	0	0	0	224	
n.K2.sin e	=	0	0	0	1,175	
Aya	=	(214,571)	(71,524)	71,524	213,846	(725)
Aay	=	(214,571)	(71,524)	71,524	213,846	(725)
Aaa = tot.(KV x cos ^2 e + K1 x sin ^2 e) x Xi ^2 ^ + (K2+K3) Xi sin e + K4)						
Xi^2.(n.Kv.cos ^2 e)	=	402,321	44,702	44,702	398,339	
Xi^2.(n.K1.sin^2 e)	=	0	0	0	421	
n.(K2+K3).Xi.sin e	=	0	0	0	4,406	
n.K4	=	23,070	23,070	23,070	23,070	
Aaa		425,391	67,772	67,772	426,235	987,170

coe–disq

Project	: Medan Flood Control	Japan International Cooperation Agency (JICA)	Calculation sheet
Channel	: Medan Flood Way		Date
Structure	: Br – F4		Nos of sheet
Station	: Fw 30 + 80		Prepared by

III.5 Coefficient displacement of footing
Normal condition
III.5.1 Case – I High Water Level

Axx	dx	+	Axy	dy	+	Axz	dz	= H
Ayx	dx	+	Ayy	dy	+	Ayz	dz	= V
Axz	dx	+	Asy	dy	+	Azz	dz	= M

55,189.00	dx	+	9,249.00	dy	+	(33,596.00)	dz	= 101.53 H
9,249.00	dx	+	427,019.00	dy	+	(465.00)	dz	= 869.66 V
(33,596.00)	dx	+	(465.00)	dy	+	933,190.00	dz	= (158.42) M

det A

5.519E+04	427019	−465
	−465	933190
9249	9249	−465
	−33596	933190
−33596	9249	427019
	−33596	−465

+	55189	x(	427019	x	933190	−	−465	x	−465)		
	55189	x(	396489660810	−	−216225	)				=	2.20E+16
−	9249	x(	9249	x	933190	−	−33596	x	−465)		
	9249	x(	8631074310	−	−15622140	)				=	−7.97E+13
+	−33596	x(	9249	x	−465	−	−33596	x	427019)		
	−33596	x(	−4300785	−	1.435E+10	)				=	−4.82E+14
											2.14E+16

$$\frac{1}{\det} = \frac{1}{2.14E+16}$$

Kofactor

a11	4.27E+05		−4.65E+02	+(	4.27E+05	x	9.33E+05	)−(−4.65E+02	x	−4.65E+02	)=	C11
	−4.65E+02		9.33E+05	+(	3.98E+11			)−(2.16E+05	)		=	3.98E+11
a12	9.25E+03		−4.65E+02	−(	9.25E+03	x	9.33E+05	)−(−3.36E+04	x	−4.65E+02	)=	C12
	−3.36E+04		9.33E+05	−(	8.63E+09			)−(1.56E+07	)		=	−8.62E+09
a13	9.25E+03		4.27E+05	+(	9.25E+03	x	−4.65E+02	)−(−3.36E+04	x	4.27E+05	)=	C13
	−3.36E+04		−4.65E+02	+(	−4.30E+08			)−(−1.43E+10	)		=	1.43E+10
a21	9.25E+03		−3.36E+04	−(	9.25E+03	x	9.33E+05	)−(−4.65E+02	x	−3.36E+04	)=	C21
	−4.65E+02		9.33E+05	−(	8.63E+09			)−(1.56E+07	)		=	−8.62E+09
a22	5.52E+04		−3.36E+04	+(	5.52E+04	x	9.33E+05	− −3.36E+04	x	−3.36E+04	)=	C22
	−3.36E+04		9.33E+05	+(	5.15E+10			− 1.13E+09	)		=	5.04E+10
a23	5.52E+04		9.25E+03	+(	5.52E+04	x	−4.65E+02	− −3.36E+04	x	9.25E+03	)=	C23
	−3.36E+04		−4.65E+02	+(	−2.57E+07			− −3.11E+08	)		=	−2.85E+08
a31	9.25E+03		−3.36E+04	+(	9.25E+03	x	−4.65E+02	− 4.27E+05	x	−3.36E+04	)=	C31
	4.27E+05		−4.65E+02	+(	−4.30E+08			− −1.43E+10	)		=	1.43E+10
a32	5.52E+04		−3.36E+04	−(	5.52E+04	x	−4.65E+02	− 9.25E+03	x	−3.36E+04	)=	C32
	9.25E+03		−4.65E+02	−(	−2.57E+07			− −3.11E+08	)		=	−2.85E+08
a33	5.52E+04		9.25E+03	+(	5.52E+04	x	4.27E+05	− 9.25E+03	x	9.25E+03	)=	C33
	9.25E+03		4.27E+05	+(	2.36E+10			− 8.55E+07	)		=	2.35E+10

C =

3.98E+11	−8.62E+09	1.43E+10
−8.62E+09	5.04E+10	−2.85E+08
1.43E+10	−2.85E+08	2.35E+10

Adj C = C t =

3.98E+11	−8.62E+09	1.43E+10
−8.62E+09	5.04E+10	−2.85E+08
1.43E+10	−2.85E+08	2.35E+10

$$A^{-1} = \frac{\text{adj A}}{\det A} = \frac{1}{\det A} \times \begin{vmatrix} 3.98E+11 & -8.62E+09 & 1.43E+10 \\ -8.62E+09 & 5.04E+10 & -2.85E+08 \\ 1.43E+10 & -2.85E+08 & 2.35E+10 \end{vmatrix} = \begin{vmatrix} 1.02E+02 & -8.70E+02 \\ 8.70E+02 & -1.59E+02 \end{vmatrix}$$

$$\begin{vmatrix} 3.98E+11 & x & 1.02E+02 + -8.62E+09 & x & 8.70E+02 + 1.43E+10 & x & -1.59E+02 \\ -8.62E+09 & x & 1.02E+02 + 5.04E+10 & x & 8.70E+02 + -2.85E+08 & x & -1.59E+02 \\ 1.43E+10 & x & 1.02E+02 + -2.85E+08 & x & 8.70E+02 + 2.35E+10 & x & -1.59E+02 \end{vmatrix}$$

$$X = A^{-1}.b = \frac{1.00E+00}{2.14E+16} \times \begin{vmatrix} 4.05E+13 + -7.49E+12 + -2.29E+12 \\ -8.75E+11 + 4.38E+13 + 4.54E+10 \\ 1.46E+12 + -2.48E+11 + -3.74E+12 \end{vmatrix} =$$

$$X = \frac{1.00E+00}{2.14E+16} \times \begin{vmatrix} 3.07E+13 \\ 4.30E+13 \\ -2.54E+12 \end{vmatrix} = \begin{vmatrix} 1.43E-03 \\ 2.01E-03 \\ -1.18E-04 \end{vmatrix}$$

$$X = \begin{vmatrix} dx \\ dy \\ dz \end{vmatrix} = \begin{matrix} 0.00143158 \\ 0.00200545 \\ (0.00011830) \end{matrix}$$

Control

9,249.00	dx	+	427,019.00	dy	+	(465.00)	dz = 869.66
9249	x	0.0014315780	=	13.2406648			
427019	x	0.0020054478	=	856.384327			
−465	x	−0.0001182955	=	0.05500740			
				869.66	=	869.66	

def–h1

Project	: Medan Flood Control	Japan International Cooperation Agency (JICA)	Calculation sheet
Channel	: Medan Flood Way		Date
Structure	: Br – F4		Nos of sheet
Station	: Fw 30 + 80		Prepared by

Normal condition
III.5.2 Case – II Low Water Level

Axx	dx	+	Axy	dy	+	Axz	dz	= H
Ayx	dx	+	Ayy	dy	+	Ayz	dz	= V
Axz	dx	+	Asy	dy	+	Azz	dz	= M

55,189.00	dx	+	9,249.00	dy	+	(33,596.00)	dz	= 101.53 H
9,249.00	dx	+	427,019.00	dy	+	(465.00)	dz	= 869.66 V
(33,596.00)	dx	+	(465.00)	dy	+	933,190.00	dz	= (158.42) M

det A

5.519E+04	427019	−465
	−465	933190
9249	9249	−465
	−33596	933190
−33596	9249	427019
	−33596	−465

+	55189	x(	427019	x	933190	−	−465	x	−465)		
	55189	x(	396489660810	−	−216225	)				=	2.20E+16
−	9249	x(	9249	x	933190	−	−33596	x	−465)		
	9249	x(	8631074310	−	−15622140	)				=	−7.97E+13
+	−33596	x(	9249	x	−465	−	−33596	x	427019)		
	−33596	x(	−4300785	−	1.435E+10	)				=	−4.82E+14
											2.14E+16

$$\frac{1}{\det} = \frac{1}{2.14E+16}$$

Kofactor

a11	4.27E+05		−4.65E+02	+(	4.27E+05	x	9.33E+05	)−(−4.65E+02	x	−4.65E+02	)=	C11
	−4.65E+02		9.33E+05	+(	3.98E+11			)−(2.16E+05	)		=	3.98E+11
a12	9.25E+03		−4.65E+02	−(	9.25E+03	x	9.33E+05	)−(−3.36E+04	x	−4.65E+02	)=	C12
	−3.36E+04		9.33E+05	−(	8.63E+09			)−(1.56E+07	)		=	−8.62E+09
a13	9.25E+03		4.27E+05	+(	9.25E+03	x	−4.65E+02	)−(−3.36E+04	x	4.27E+05	)=	C13
	−3.36E+04		−4.65E+02	+(	−4.30E+08			)−(−1.43E+10	)		=	1.43E+10
a21	9.25E+03		−3.36E+04	−(	9.25E+03	x	9.33E+05	)−(−4.65E+02	x	−3.36E+04	)=	C21
	−4.65E+02		9.33E+05	−(	8.63E+09			)−(1.56E+07	)		=	−8.62E+09
a22	5.52E+04		−3.36E+04	+(	5.52E+04	x	9.33E+05	− −3.36E+04	x	−3.36E+04	)=	C22
	−3.36E+04		9.33E+05	+(	5.15E+10			− 1.13E+09	)		=	5.04E+10
a23	5.52E+04		9.25E+03	+(	5.52E+04	x	−4.65E+02	− −3.36E+04	x	9.25E+03	)=	C23
	−3.36E+04		−4.65E+02	+(	−2.57E+07			− −3.11E+08	)		=	−2.85E+08
a31	9.25E+03		−3.36E+04	+(	9.25E+03	x	−4.65E+02	− 4.27E+05	x	−3.36E+04	)=	C31
	4.27E+05		−4.65E+02	+(	−4.30E+08			− −1.43E+10	)		=	1.43E+10
a32	5.52E+04		−3.36E+04	−(	5.52E+04	x	−4.65E+02	− 9.25E+03	x	−3.36E+04	)=	C32
	9.25E+03		−4.65E+02	−(	−2.57E+07			− −3.11E+08	)		=	−2.85E+08
a33	5.52E+04		9.25E+03	+(	5.52E+04	x	4.27E+05	− 9.25E+03	x	9.25E+03	)=	C33
	9.25E+03		4.27E+05	+(	2.36E+10			− 8.55E+07	)		=	2.35E+10

C =

3.98E+11	−8.62E+09	1.43E+10
−8.62E+09	5.04E+10	−2.85E+08
1.43E+10	−2.85E+08	2.35E+10

Adj C = C t =

3.98E+11	−8.62E+09	1.43E+10
−8.62E+09	5.04E+10	−2.85E+08
1.43E+10	−2.85E+08	2.35E+10

$$A^{-1} = \frac{\text{adj A}}{\det A} = \frac{1}{\det A} \times \begin{vmatrix} 3.98E+11 & -8.62E+09 & 1.43E+10 \\ -8.62E+09 & 5.04E+10 & -2.85E+08 \\ 1.43E+10 & -2.85E+08 & 2.35E+10 \end{vmatrix} = \begin{vmatrix} 1.02E+02 & -8.70E+02 \\ 8.70E+02 & -1.59E+02 \end{vmatrix}$$

$$\begin{vmatrix} 3.98E+11 & x & 1.02E+02 + -8.62E+09 & x & 8.70E+02 + 1.43E+10 & x & -1.59E+02 \\ -8.62E+09 & x & 1.02E+02 + 5.04E+10 & x & 8.70E+02 + -2.85E+08 & x & -1.59E+02 \\ 1.43E+10 & x & 1.02E+02 + -2.85E+08 & x & 8.70E+02 + 2.35E+10 & x & -1.59E+02 \end{vmatrix}$$

$$X = A^{-1}.b = \frac{1.00E+00}{2.14E+16} \times \begin{vmatrix} 4.05E+13 + -7.49E+12 + -2.29E+12 \\ -8.75E+11 + 4.38E+13 + 4.54E+10 \\ 1.46E+12 + -2.48E+11 + -3.74E+12 \end{vmatrix} =$$

$$X = \frac{1.00E+00}{2.14E+16} \times \begin{vmatrix} 3.07E+13 \\ 4.30E+13 \\ -2.54E+12 \end{vmatrix} = \begin{vmatrix} 1.43E-03 \\ 2.01E-03 \\ -1.18E-04 \end{vmatrix}$$

$$X = \begin{vmatrix} dx \\ dy \\ dz \end{vmatrix} = \begin{matrix} 0.00143158 \\ 0.00200545 \\ (0.00011830) \end{matrix}$$

Control

9,249.00	dx	+	427,019.00	dy	+	(465.00)	dz = 869.66
9249	x	0.0014315780	=	13.2406648			
427019	x	0.0020054478	=	856.384327			
−465	x	−0.0001182955	=	0.05500740			
				869.66	=	869.66	

def–h2

Project	: Medan Flood Control
Channel	: Medan Flood Way
Structure	: Br – F4
Station	: Fw 30 + 80

Japan International Cooperation Agency (JICA)

Calculation sheet	
Date	
Nos of sheet	
Prepared by	

Earthquake condition
III.5.3 Case – III High Water Level

Axx	dx	+	Axy	dy	+	Axz	dz	= H
Ayx	dx	+	Ayy	dy	+	Ayz	dz	= V
Axx	dx	+	Axy	dy	+	Axa	dz	= M

48,349.00	dx	+	10,133.00	dy	+ (28,174.00)	dz = 244.37 H
10,133.00	dx	+	456,739.00	dy	+ (725.00)	dz = 862.16 V
(28,174.00)	dx	+	(725.00)	dy	+ 967,170.00	dz = (534.61) M

det A

4.935E+04	456739	−725
	−725	967170
10133	10133	−725
	−28174	967170
−28174	10133	456739
	−28174	−725

+	48349	x(	456739	x	967170	−	−725	x	−725)	
	48349	x(	450879036830	−	−525625	)				= 2.23E+16
−	10133	x(	10133	x	967170	−	−28174	x	−725)	
	10133	x(	10002993810	−	−20426150	)				= −1.01E+14
+	−28174	x(	10133	x	−725	−	−28174	x	456739)	
	−28174	x(	−7346425	−	1.287E+10	)				= −3.62E+14
										2.18E+16

1 / det = 1 / 2.18E+16

Kofactor

a11	4.57E+05	−7.25E+02	+(	4.57E+05	x	9.87E+05	)−(−7.25E+02	x	−7.25E+02	)= C11		
	−7.25E+02	9.87E+05	+(	4.51E+11			)−(5.26E+05	)		= 4.51E+11		
a12	1.01E+04	−7.25E+02	−(	1.01E+04	x	9.87E+05	)−(−2.82E+04	x	−7.25E+02	)= C12		
	−2.82E+04	9.87E+05	−(	1.00E+10			)−(2.04E+07	)		= −9.98E+09		
a13	1.01E+04	4.57E+05	+(	1.01E+04	x	−7.25E+02	)−(−2.82E+04	x	4.57E+05	)= C13		
	−2.82E+04	−7.25E+02	+(	−7.35E+08			)−(−1.29E+10	)		= 1.29E+10		
a21	1.01E+04	−2.82E+04	−(	1.01E+04	x	9.87E+05	)−(−7.25E+02	x	−2.82E+04	)= C21		
	−7.25E+02	9.87E+05	−(	1.00E+10			)−(2.04E+07	)		= −9.98E+09		
a22	4.93E+04	−2.82E+04	+(	4.93E+04	x	9.87E+05	− −2.82E+04	x	−2.82E+04	)= C22		
	−2.82E+04	9.87E+05	+(	4.67E+10			− 7.94E+08	)		= 4.79E+10		
a23	4.93E+04	1.01E+04	+(	4.93E+04	x	−7.25E+02	− −2.82E+04	x	1.01E+04	)= C23		
	−2.82E+04	−7.25E+02	+(	−3.56E+07			− −2.85E+08	)		= −2.50E+08		
a31	1.01E+04	−2.82E+04	+(	1.01E+04	x	−7.25E+02	− 4.57E+05	x	−2.82E+04	)= C31		
	4.57E+05	−7.25E+02	+(	−7.35E+08			− −1.29E+10	)		= 1.29E+10		
a32	4.93E+04	−2.82E+04	−(	4.93E+04	x	−7.25E+02	− 1.01E+04	x	−2.82E+04	)= C32		
	1.01E+04	−7.25E+02	−(	−3.56E+07			− −2.85E+08	)		= −2.50E+08		
a33	4.93E+04	1.01E+04	+(	4.93E+04	x	4.57E+05	− 1.01E+04	x	1.01E+04	)= C33		
	1.01E+04	4.57E+05	+(	2.25E+10			− 1.03E+08	)		= 2.24E+10		

C =

4.51E+11	−9.98E+09	1.29E+10
−9.98E+09	4.79E+10	−2.50E+08
1.29E+10	−2.50E+08	2.24E+10

Adj C = Ct =

4.51E+11	−9.98E+09	1.29E+10
−9.98E+09	4.79E+10	−2.50E+08
1.29E+10	−2.50E+08	2.24E+10

A^−1 = adj A / det A = (1 / det A) x

4.51E+11	−9.98E+09	1.29E+10
4.79E+10	−2.50E+08	2.24E+10
−2.50E+08	2.24E+10	−5.35E+02

4.51E+11	x	2.44E+02	+	−9.98E+09	x	8.62E+02	+	1.29E+10	x	−5.35E+02
−9.98E+09	x	2.44E+02	+	4.79E+10	x	8.62E+02	+	−2.50E+08	x	−5.35E+02
1.29E+10	x	2.44E+02	+	−2.50E+08	x	8.62E+02	+	2.24E+10	x	−5.35E+02

X = A^−1.b =

1.00E+00 / 2.18E+16	x	1.10E+14	+	−8.61E+12	+	−8.62E+12		
		−2.44E+12	+	4.13E+13	+	1.33E+11	=	
		3.14E+12	+	−2.15E+11	+	−1.20E+13		

X = 1.00E+00 / 2.18E+16 x

9.47E+13	=	4.35E−03
3.90E+13		1.79E−03
−9.07E+12		−4.16E−04

X = dx, dy, dz =

dx	0.00434660
dy	0.00179055
dz	(0.00041619)

Control

10,133.00	dx	+	456,739.00	dy	+	(725.00)	dz =	862.16
10133	x		0.0043466050	=		44.0441481		
456739	x		0.0017905502	=		817.814113		
−725	x		−0.0004161903	=		0.30173798		
						862.16	=	862.16

def−h3

Project	: Medan Flood Control
Channel	: Medan Flood Way
Structure	: Br – F4
Station	: Fw 30 + 80

Japan International Cooperation Agency (JICA)

Calculation sheet	
Date	
Nos of sheet	
Prepared by	

Earthquake condition
III.5.4 Case – IV Low Water Level

Axx	dx	+	Axy	dy	+	Axz	dz	= H
Ayx	dx	+	Ayy	dy	+	Ayz	dz	= V
Axx	dx	+	Axy	dy	+	Axa	dz	= M

48,349.00	dx	+	10,133.00	dy	+ (28,174.00)	dz = 244.37 H
10,133.00	dx	+	456,739.00	dy	+ (725.00)	dz = 862.16 V
(28,174.00)	dx	+	(725.00)	dy	+ 967,170.00	dz = (530.32) M

det A

4.935E+04	456739	−725
	−725	967170
10133	10133	−725
	−28174	967170
−28174	10133	456739
	−28174	−725

+	48349	x(	456739	x	967170	−	−725	x	−725)	
	48349	x(	450879036830	−	−525625	)				= 2.23E+16
−	10133	x(	10133	x	967170	−	−28174	x	−725)	
	10133	x(	10002993810	−	−20426150	)				= −1.01E+14
+	−28174	x(	10133	x	−725	−	−28174	x	456739)	
	−28174	x(	−7346425	−	1.287E+10	)				= −3.62E+14
										2.18E+16

1 / det = 1 / 2.18E+16

Kofactor

a11	4.57E+05	−7.25E+02	+(	4.57E+05	x	9.87E+05	)−(−7.25E+02	x	−7.25E+02	)= C11		
	−7.25E+02	9.87E+05	+(	4.51E+11			)−(5.26E+05	)		= 4.51E+11		
a12	1.01E+04	−7.25E+02	−(	1.01E+04	x	9.87E+05	)−(−2.82E+04	x	−7.25E+02	)= C12		
	−2.82E+04	9.87E+05	−(	1.00E+10			)−(2.04E+07	)		= −9.98E+09		
a13	1.01E+04	4.57E+05	+(	1.01E+04	x	−7.25E+02	)−(−2.82E+04	x	4.57E+05	)= C13		
	−2.82E+04	−7.25E+02	+(	−7.35E+08			)−(−1.29E+10	)		= 1.29E+10		
a21	1.01E+04	−2.82E+04	−(	1.01E+04	x	9.87E+05	)−(−7.25E+02	x	−2.82E+04	)= C21		
	−7.25E+02	9.87E+05	−(	1.00E+10			)−(2.04E+07	)		= −9.98E+09		
a22	4.93E+04	−2.82E+04	+(	4.93E+04	x	9.87E+05	− −2.82E+04	x	−2.82E+04	)= C22		
	−2.82E+04	9.87E+05	+(	4.67E+10			− 7.94E+08	)		= 4.79E+10		
a23	4.93E+04	1.01E+04	+(	4.93E+04	x	−7.25E+02	− −2.82E+04	x	1.01E+04	)= C23		
	−2.82E+04	−7.25E+02	+(	−3.56E+07			− −2.85E+08	)		= −2.50E+08		
a31	1.01E+04	−2.82E+04	+(	1.01E+04	x	−7.25E+02	− 4.57E+05	x	−2.82E+04	)= C31		
	4.57E+05	−7.25E+02	+(	−7.35E+08			− −1.29E+10	)		= 1.29E+10		
a32	4.93E+04	−2.82E+04	−(	4.93E+04	x	−7.25E+02	− 1.01E+04	x	−2.82E+04	)= C32		
	1.01E+04	−7.25E+02	−(	−3.56E+07			− −2.85E+08	)		= −2.50E+08		
a33	4.93E+04	1.01E+04	+(	4.93E+04	x	4.57E+05	− 1.01E+04	x	1.01E+04	)= C33		
	1.01E+04	4.57E+05	+(	2.25E+10			− 1.03E+08	)		= 2.24E+10		

C =

4.51E+11	−9.98E+09	1.29E+10
−9.98E+09	4.79E+10	−2.50E+08
1.29E+10	−2.50E+08	2.24E+10

Adj C = Ct =

4.51E+11	−9.98E+09	1.29E+10
−9.98E+09	4.79E+10	−2.50E+08
1.29E+10	−2.50E+08	2.24E+10

A^−1 = adj A / det A = (1 / det A) x

4.51E+11	−9.98E+09	1.29E+10
4.79E+10	−2.50E+08	2.24E+10
−2.50E+08	2.24E+10	−5.30E+02

4.51E+11	x	2.44E+02	+	−9.98E+09	x	8.62E+02	+	1.29E+10	x	−5.30E+02
−9.98E+09	x	2.44E+02	+	4.79E+10	x	8.62E+02	+	−2.50E+08	x	−5.30E+02
1.29E+10	x	2.44E+02	+	−2.50E+08	x	8.62E+02	+	2.24E+10	x	−5.30E+02

X = A^−1.b =

1.00E+00 / 2.18E+16	x	1.10E+14	+	−8.61E+12	+	−8.62E+12		
		−2.44E+12	+	4.13E+13	+	1.32E+11	=	
		3.14E+12	+	−2.15E+11	+	−1.19E+13		

X = 1.00E+00 / 2.18E+16 x

9.48E+13	=	4.35E−03
3.90E+13		1.79E−03
−9.07E+12		−4.12E−04

X = dx, dy, dz =

dx	0.00434914
dy	0.00179050
dz	(0.00041177)

Control

10,133.00	dx	+	456,739.00	dy	+	(725.00)	dz =	862.16
10133	x		0.0043481374	=		44.0896088		
456739	x		0.0017905501	=		817.791658		
−725	x		−0.0004117723	=		0.29653493		
						862.16	=	862.16

def−h4

Project	: Medan Flood Control	Japan International Cooperation Agency (JICA)	Calculation sheet
Channel	: Medan Flood Way		Date
Structure	: Br – F4		Nos of sheet
Station	: Pw 30 + 80		Prepared by

III.6 Force at each pile head

Normal condition

III.6.1 Case I High Water Level

dxi = (dxi.cos e) – (dy + alpa.Xi).sin e)

dyi = (dxi.sin e) + (dy + alpa.Xi)cos e)

		Side	Row of pile (1)	(2)	(3)	(4)	total
			L/s	L/s	R/s	R/s	per
		sign	(–)	(–)	(+)	(+)	row
		degree	< 0	< 0	> 0	> 0	
Xi	m		(1.875)	(0.625)	0.625	1.875	
n=nos pile/rows			6.00	6.00	6.00	6.00	
e	degree		0.00	0.00	0.00	5.71	
cos e	degree		1.000	1.000	1.000	0.995	
sin e	degree		0.000	0.000	0.000	0.099	
K1	t.m		2,261	2,261	2,261	2,261	
K2	t.m/rad		2,125	2,125	2,125	2,125	
K3	t.m/rad		2,125	2,125	2,125	2,125	
K4	t.m		3,994	3,994	3,994	3,994	
Kv	t.m		17,831	17,831	17,831	17,831	
dx	m		0.00143158	0.00143158	0.00143158	0.00143158	
dy	m		0.00200545	0.00200545	0.00200545	0.00200545	
alpa	rad		(0.00011830)	(0.00011830)	(0.00011830)	(0.00011830)	
dxi = dx cos e – (dy + alpa.Xi) sin e							
dx.cos e	=		0.00143	0.00143	0.00143	0.00142	
dy	=		0.00201	0.00201	0.00201	0.00201	
alpa	=		(0.00012)	(0.00012)	(0.00012)	(0.00012)	
Alpa x Xi	=		0.00022	0.00007	(0.00007)	(0.00022)	
dy + Alpa x Xi	=		0.00223	0.00208	0.00193	0.00178	
(dy + alpa.Xi).sin e	=		0.00000	0.00000	0.00000	0.00018	
dxi	=		0.00143	0.00143	0.00143	0.00125	
dyi = dx sin e + (dy + alpa.Xi).cos e							
dx.sin e	=		0.0000000	0.0000000	0.0000000	0.0001424	
dy	=		0.0020055	0.0020055	0.0020055	0.0020055	
alpa	=		(0.0001183)	(0.0001183)	(0.0001183)	(0.0001183)	
Alpa x Xi	=		0.0002218	0.0000739	(0.0000739)	(0.0002218)	
dy + Alpa x Xi	=		0.0022273	0.0020794	0.0019315	0.0017836	
(dy + alpa.Xi).cos e	=		0.0022273	0.0020794	0.0019315	0.0017748	
dyi	=		0.0022273	0.0020794	0.0019315	0.0019172	
P ni=Kv.dyi			39.71	37.08	34.44	34.19	
K1.dxi	=		3.24	3.24	3.24	2.82	
K2.alpa	=		(0.25)	(0.25)	(0.25)	(0.25)	
P hi=K1.dxi–K2.alpa	=		3.49	3.49	3.49	3.07	
K3.dxi	=		3.04	3.04	3.04	2.65	
K4.alpa	=		(0.47)	(0.47)	(0.47)	(0.47)	
M ti=–K3.dxi+K4.alpa	=		(3.51)	(3.51)	(3.51)	(3.12)	(13.67)
Mti x n	=		(21.09)	(21.09)	(21.09)	(18.73)	(82.00)
Vi = Pni.cos e – Phi.sin e							
Pni.cos	=		39.71	37.08	34.44	34.02	
Phi.sin e	=		0.00	0.00	0.00	0.31	
Vi	=		39.71	37.08	34.44	33.71	
Vi.n	=		238.29	222.47	206.64	202.26	869.66
Hi= Pni.sin e + Phi.cos e							
Pni.sin e	=		0.0	0.0	0.0	3.4	
Phi.cos e	=		3.5	3.5	3.5	3.1	
Hi	=		3.49	3.49	3.49	6.46	
Hi.n	=		20.93	20.93	20.93	38.74	101.53
Vi.n.X	=		(446.79)	(139.04)	129.15	379.25	
Mti.n	=		(21.09)	(21.09)	(21.09)	(18.73)	
Mt=Mti.n + Vi.n.X	=		(467.87)	(160.13)	108.07	360.51	(159.42)

Total forces at footing of Abutment

Ho	=	101.53	ton
Vo	=	869.66	ton
Mo	=	(159.42)	t.m

Total forces at pile head

Hi.n = Ho	101.53	ton
Vi.n = Vo	869.66	ton
Mt = Mo	(159.42)	t.m

mvh–1

Project	: Medan Flood Control	Japan International Cooperation Agency (JICA)	Calculation sheet
Channel	: Medan Flood Way		Date
Structure	: Br – F4		Nos of sheet
Station	: Pw 30 + 80		Prepared by

Normal condition

III.6.2 Case II Low Water Level

dxi = (dxi.cos e) – (dy + alpa.Xi).sin e)

dyi = (dxi.sin e) + (dy + alpa.Xi)cos e)

		Side	Row of pile (1)	(2)	(3)	(4)	total
			L/s	L/s	R/s	R/s	per
		sign	(–)	(–)	(+)	(+)	row
		degree	< 0	< 0	> 0	> 0	
Xi	m		(1.875)	(0.625)	0.625	1.875	
n=nos pile/rows			6.00	6.00	6.00	6.00	
e	degree		0.00	0.00	0.00	5.71	
cos e	degree		1.000	1.000	1.000	0.995	
sin e	degree		0.000	0.000	0.000	0.099	
K1	t.m		2,261	2,261	2,261	2,261	
K2	t.m/rad		2,125	2,125	2,125	2,125	
K3	t.m/rad		2,125	2,125	2,125	2,125	
K4	t.m		3,994	3,994	3,994	3,994	
Kv	t.m		17,831	17,831	17,831	17,831	
dx	m		0.00143158	0.00143158	0.00143158	0.00143158	
dy	m		0.00200545	0.00200545	0.00200545	0.00200545	
alpa	rad		(0.00011830)	(0.00011830)	(0.00011830)	(0.00011830)	
dxi = dx cos e – (dy + alpa.Xi) sin e							
dx.cos e	=		0.00143	0.00143	0.00143	0.00142	
dy	=		0.00201	0.00201	0.00201	0.00201	
alpa	=		(0.00012)	(0.00012)	(0.00012)	(0.00012)	
Alpa x Xi	=		0.00022	0.00007	(0.00007)	(0.00022)	
dy + Alpa x Xi	=		0.00223	0.00208	0.00193	0.00178	
(dy + alpa.Xi).sin e	=		0.00000	0.00000	0.00000	0.00018	
dxi	=		0.00143	0.00143	0.00143	0.00125	
dyi = dx sin e + (dy + alpa.Xi).cos e							
dx.sin e	=		0.0000000	0.0000000	0.0000000	0.0001424	
dy	=		0.0020055	0.0020055	0.0020055	0.0020055	
alpa	=		(0.0001183)	(0.0001183)	(0.0001183)	(0.0001183)	
Alpa x Xi	=		0.0002218	0.0000739	(0.0000739)	(0.0002218)	
dy + Alpa x Xi	=		0.0022273	0.0020794	0.0019315	0.0017836	
(dy + alpa.Xi).cos e	=		0.0022273	0.0020794	0.0019315	0.0017748	
dyi	=		0.0022273	0.0020794	0.0019315	0.0019172	
P ni=Kv.dyi			39.71	37.08	34.44	34.19	
K1.dxi	=		3.24	3.24	3.24	2.82	
K2.alpa	=		(0.25)	(0.25)	(0.25)	(0.25)	
P hi=K1.dxi–K2.alpa	=		3.49	3.49	3.49	3.07	
K3.dxi	=		3.04	3.04	3.04	2.65	
K4.alpa	=		(0.47)	(0.47)	(0.47)	(0.47)	
M ti=–K3.dxi+K4.alpa	=		(3.51)	(3.51)	(3.51)	(3.12)	(13.67)
Mti x n	=		(21.09)	(21.09)	(21.09)	(18.73)	(82.00)
Vi = Pni.cos e – Phi sin e							
Pni.cos	=		39.71	37.08	34.44	34.02	
Phi.sin e	=		0.00	0.00	0.00	0.31	
Vi	=		39.71	37.08	34.44	33.71	
Vi.n	=		238.29	222.47	206.64	202.26	869.66
Hi= Pni.sin e + Phi.cos e							
Pni.sin e	=		0.0	0.0	0.0	3.4	
Phi.cos e	=		3.5	3.5	3.5	3.1	
Hi	=		3.49	3.49	3.49	6.46	
Hi.n	=		20.93	20.93	20.93	38.74	101.53
Vi.n.X	=		(446.79)	(139.04)	129.15	379.25	
Mti.n	=		(21.09)	(21.09)	(21.09)	(18.73)	
Mt=Mti.n + Vi.n.X	=		(467.87)	(160.13)	108.07	360.51	(159.42)

Total forces at footing of Abutment

Ho	=	101.53	ton
Vo	=	869.66	ton
Mo	=	(159.42)	t.m

Total forces at pile head

Hi.n = Ho	101.53	ton
Vi.n = Vo	869.66	ton
Mt = Mo	(159.42)	t.m

mvh–2

Project	: Medan Flood Control	Japan International Cooperation Agency (JICA)	Calculation sheet	
Channel	: Medan Flood Way		Date	
Structure	: Br – F4		Nos of sheet	
Station	: Fw 30 + 80		Prepared by	

Earthquake condition

III.6.3 Case III High Water Level

dxi = (dxi.cos e) – (dy + alpa.Xi).sin e)

dyi = (dxi.sin e) + (dy + alpa.Xi)cos e)

		Row of pile (1)	(2)	(3)	(4)	total
	Side	L/s	L/s	R/s	R/s	per
	sign	(–)	(–)	(+)	(+)	row
	degree	< 0	< 0	> 0	> 0	
Xi	m	(1.875)	(0.625)	0.625	1.875	
n=nos pile/rows		6.00	6.00	6.00	6.00	
e	degree	0.00	0.00	0.00	5.71	
cos e	degree	1.000	1.000	1.000	0.995	
sin e	degree	0.000	0.000	0.000	0.099	
Ki	t.m	2,014	2,014	2,014	2,014	
K2	t.m/rad	1,968	1,968	1,968	1,968	
K3	t.m/rad	1,968	1,968	1,968	1,968	
K4	t.m	3,845	3,845	3,845	3,845	
Kv	t.m	19,073	19,073	19,073	19,073	
dx	m	0.00434660	0.00434660	0.00434660	0.00434660	
dy	m	0.00179055	0.00179055	0.00179055	0.00179055	
alpa	rad	(0.00041619)	(0.00041619)	(0.00041619)	(0.00041619)	
dxi = dx cos e – (dy + alpa.Xi).sin e						
dx.cos e	=	0.00435	0.00435	0.00435	0.00433	
dy	=	0.00179	0.00179	0.00179	0.00179	
alpa	=	(0.00042)	(0.00042)	(0.00042)	(0.00042)	
Alpa x Xi	=	0.00078	0.00026	(0.00026)	(0.00078)	
dy + Alpa x Xi	=	0.00257	0.00205	0.00153	0.00101	
(dy + alpa.Xi).sin e	=	0.00000	0.00000	0.00000	0.00010	
dxi	=	0.00435	0.00435	0.00435	0.00422	
dyi = dx sin e + (dy + alpa.Xi).cos e						
dx.sin e	=	0.0000000	0.0000000	0.0000000	0.0004325	
dy	=	0.0017906	0.0017906	0.0017906	0.0017906	
alpa	=	(0.0004162)	(0.0004162)	(0.0004162)	(0.0004162)	
Alpa x Xi	=	0.0007804	0.0002601	(0.0002601)	(0.0007804)	
dy + Alpa x Xi	=	0.0025709	0.0020507	0.0015304	0.0010102	
(dy + alpa.Xi).cos e	=	0.0025709	0.0020507	0.0015304	0.0010052	
dyi	=	0.0025709	0.0020507	0.0015304	0.0014376	
P ni=Kv.dyi		49.03	39.11	29.19	27.42	
K1.dxi	=	8.75	8.75	8.75	8.51	
K2.alpa	=	(0.82)	(0.82)	(0.82)	(0.82)	
P hi=K1.dxi–K2.alpa	=	9.57	9.57	9.57	9.33	
K3.dxi	=	8.55	8.55	8.55	8.31	
K4.alpa	=	(1.60)	(1.60)	(1.60)	(1.60)	
M ti=–K3.dxi+K4.alpa	=	(10.15)	(10.15)	(10.15)	(9.91)	(40.36)
Mti x n	=	(60.93)	(60.93)	(60.93)	(59.48)	(242.26)
Vi = Pni.cos e – Phi.sin e						
Pni.cos	=	49.03	39.11	29.19	27.28	
Phi.sin e	=	0.00	0.00	0.00	0.93	
Vi	=	49.03	39.11	29.19	26.36	
Vi.n	=	294.21	234.67	175.14	158.14	862.16
Hi= Pni.sin e + Phi.cos e						
Pni.sin e	=	0.0	0.0	0.0	2.7	
Phi.cos e	=	9.6	9.6	9.6	9.3	
Hi	=	9.57	9.57	9.57	12.01	
Hi.n	=	57.44	57.44	57.44	72.05	244.37
Vi.n.X	=	(551.64)	(146.67)	109.46	296.51	
Mti.n	=	(60.93)	(60.93)	(60.93)	(59.48)	
Mt=Mti.n + Vi.n.X	=	(612.57)	(207.60)	48.54	237.02	(534.61)

Total forces at footing of Abutment			
Ho	=	244.37	ton
Vo	=	862.16	ton
Mo	=	(534.61)	t.m

Total forces at pile head		
Hi.n = Ho	244.37	ton
Vi.n = Vo	862.16	ton
Mt = Mo	(534.61)	t.m

mvh–3

Project	: Medan Flood Control	Japan International Cooperation Agency (JICA)	Calculation sheet	
Channel	: Medan Flood Way		Date	
Structure	: Br – F4		Nos of sheet	
Station	: Fw 30 + 80		Prepared by	

Earthquake condition

III.6.4 Case IV Low Water Level

dxi = (dxi.cos e) – (dy + alpa.Xi).sin e)

dyi = (dxi.sin e) + (dy + alpa.Xi)cos e)

		Row of pile (1)	(2)	(3)	(4)	total
	Side	L/s	L/s	R/s	R/s	per
	sign	(–)	(–)	(+)	(+)	row
	degree	< 0	< 0	> 0	> 0	
Xi	m	(1.875)	(0.625)	0.625	1.875	
n=nos pile/rows		6.00	6.00	6.00	6.00	
e	degree	0.00	0.00	0.00	5.71	
cos e	degree	1.000	1.000	1.000	0.995	
sin e	degree	0.000	0.000	0.000	0.099	
K1	t.m	2,014	2,014	2,014	2,014	
K2	t.m/rad	1,968	1,968	1,968	1,968	
K3	t.m/rad	1,968	1,968	1,968	1,968	
K4	t.m	3,845	3,845	3,845	3,845	
Kv	t.m	19,073	19,073	19,073	19,073	
dx	m	0.00434914	0.00434914	0.00434914	0.00434914	
dy	m	0.00179050	0.00179050	0.00179050	0.00179050	
alpa	rad	(0.00041177)	(0.00041177)	(0.00041177)	(0.00041177)	
dxi = dx cos e – (dy + alpa.Xi).sin e						
dx.cos e	=	0.00435	0.00435	0.00435	0.00433	
dy	=	0.00179	0.00179	0.00179	0.00179	
alpa	=	(0.00041)	(0.00041)	(0.00041)	(0.00041)	
Alpa x Xi	=	0.00077	0.00026	(0.00026)	(0.00077)	
dy + Alpa x Xi	=	0.00256	0.00205	0.00153	0.00102	
(dy + alpa.Xi).sin e	=	0.00000	0.00000	0.00000	0.00010	
dxi	=	0.00435	0.00435	0.00435	0.00423	
dyi = dx sin e + (dy + alpa.Xi).cos e						
dx.sin e	=	0.0000000	0.0000000	0.0000000	0.0004327	
dy	=	0.0017905	0.0017905	0.0017905	0.0017905	
alpa	=	(0.0004118)	(0.0004118)	(0.0004118)	(0.0004118)	
Alpa x Xi	=	0.0007721	0.0002574	(0.0002574)	(0.0007721)	
dy + Alpa x Xi	=	0.0025626	0.0020479	0.0015331	0.0010184	
(dy + alpa.Xi).cos e	=	0.0025626	0.0020479	0.0015331	0.0010134	
dyi	=	0.0025626	0.0020479	0.0015331	0.0014461	
P ni=Kv.dyi		48.88	39.06	29.24	27.58	
K1.dxi	=	8.76	8.76	8.76	8.51	
K2.alpa	=	(0.81)	(0.81)	(0.81)	(0.81)	
P hi=K1.dxi–K2.alpa	=	9.57	9.57	9.57	9.32	
K3.dxi	=	8.56	8.56	8.56	8.32	
K4.alpa	=	(1.58)	(1.58)	(1.58)	(1.58)	
M ti=–K3.dxi+K4.alpa	=	(10.14)	(10.14)	(10.14)	(9.90)	(40.33)
Mti x n	=	(60.85)	(60.85)	(60.85)	(59.40)	(241.97)
Vi = Pni.cos e – Phi.sin e						
Pni.cos	=	48.88	39.06	29.24	27.44	
Phi.sin e	=	0.00	0.00	0.00	0.93	
Vi	=	48.88	39.06	29.24	26.52	
Vi.n	=	293.26	234.35	175.45	159.10	862.16
Hi= Pni.sin e + Phi.cos e						
Pni.sin e	=	0.0	0.0	0.0	2.7	
Phi.cos e	=	9.6	9.6	9.6	9.3	
Hi	=	9.57	9.57	9.57	12.02	
Hi.n	=	57.42	57.42	57.42	72.12	244.37
Vi.n.X	=	(549.85)	(146.47)	109.68	298.32	
Mti.n	=	(60.85)	(60.85)	(60.85)	(59.40)	
Mt=Mti.n + Vi.n.X	=	(610.71)	(207.32)	48.80	238.91	(530.32)

Total forces at footing of Abutment			
Ho	=	244.37	ton
Vo	=	862.16	ton
Mo	=	(530.32)	t.m

Total forces at pile head		
Hi.n = Ho	244.37	ton
Vi.n = Vo	862.16	ton
Mt = Mo	(530.32)	t.m

mvh–4

Project : Medan Flood Control Channel : Medan Flood Way Structure : Br – F 4 Station : Fw 30 + 80	Japan International Cooperation Agency (JICA)	Calculation sheet Date Nos of sheet Prepared by

III.7 Control stresses on head pile
Normal Condition
III.7.1 Case – II Low Water Level

review pile ø 400 mm,with 21 nos pile per group

Depth embedded of pile = 28.84 m

Axial load Vi = 39.710 ton
39,710 kg

Moment Mi = (3.810) t.m
= (381,000)kg.cm

diameter do = 40.00 cm
outer radius ro = 20.00 cm

M' = Mx + Vi x ro
= (381,000) + 39,710 x 20.00
= (381,000) + 794,200
= 413,200 kg.cm

excentrisitas $e = \frac{Mx}{Vi}$

$= \frac{(381,000)\text{kg.cm}}{39,710\text{ kg}}$

= (9.59) cm

concrete covering a' = 2.50 cm

t = 1.03 cm

Inner diameter di = 40.00 – 2.06
= 37.94
inner radius ri = 18.97 cm

ro^2 = 400.00
ri^2 = 359.82
ro^2–ri^2 = 400.00 – 359.82
ro^2–ri^2 = 40.18 cm2

area of steel bar
As = 8 ø 16 --Ø 16 "
8.00 x 2.0106 = 16.08 cm2

As = 16.08 cm2

$Ys = \frac{\text{Area of bar.Y bar}}{\text{Area of bar}}$

$= \frac{16.08 \times 18.97}{16.08}$

$= \frac{305.12}{16.08}$

= 18.97 cm

$n = \frac{1,897,200}{147,878}$

= 12.83

$p = \frac{\text{tot.A rea of steel bar}}{@pi.ro^2}$

$= \frac{16.08}{3.14 \times 400.00}$

$= \frac{16.08}{1,256.64}$

p = 0.01280

n.p = 12.83 x 0.01280

= 1.54810

$alpa = \frac{ri}{ro} = \frac{18.97}{20.00} = 0.95$

e = (9.59) cm

$\frac{e}{ro} = \frac{(9.59)}{20.00} = (0.4797)$

$\frac{e}{ro} = \frac{pi/4 - (5/12 - 1/6.\cos^2 pi)\sin pi.\cos pi + (n.@pi.p)/2.(ri/ro)^2}{\sin pi/3.(2 + \cos^2 pi) - pi.\cos pi - n.@pi.p \cos pi}$

trial value of pi --->>>>

pi = 27.9161 degree
pi = 0.4872 rad.

e = pi/4 – (5/12 – 1/6.cos^2 pi)sin pi.cos pi + (n.@pi.p)/2.(alpa)^2
pi/4 = A = 0.4872 : 4.00 = 0.12
n = 12.83
alpa = 0.95 cm
alpa^2 = 0.90 cm^2

cos pi	=	0.883634							
Sin pi	=	0.468178							
Cos^2 pi	=	0.780809							
1/6.cos^2 pi	=	0.166667	x	0.780809	=	0.13013			
(5/12 − 1/6.cos^2 pi)	=	0.416667	−	0.130135	=	0.286532			
Sin pi cos pi	=	0.468178	x	0.883634	=	0.41			
(5/12 − 1/6.cos^2 pi) x sin pi.cos pi = B	=	0.28653	x	0.88363			=	0.25319	
(n.@pi.p)	=	1.55	x	3.14	=	4.86			
(n.@pi.p)/2	=	4.86	:	2.00	=	2.43			
(n.@pi.p)/2 x (alpa)^2 = C	=	2.43	x	0.90			=	2.19	
sum A − B + C	=	0.12	−	0.25	+	2.19	=	2.06	

ro = sin pi/3.(2 + cos^2 pi)−pi.cos pi − n.@pi.p cos pi

(Sin pi)/3	=	0.156							
(2 + cos^2 pi)	=	2.000	+	0.781	=	2.781			
sin ø /3 x (2 + cos^2 pi)	=	0.156	x	2.781			=	0.434	
pi.cos pi	=	0.487	x	0.884			=	0.431	
n.@pi.p	=	1.548	x	3.142	=	4.864			
n.@pi.p cos pi	=	4.864	x	0.884			=	4.298	
							=	(4.294)	

$$\frac{e}{ro} = \frac{2.06}{(4.29)} \qquad pi = 27.92 \text{ rad}$$

$$\frac{e}{ro} = (0.4788) \qquad \frac{e}{ro} = (0.4797)$$

$$C = \frac{1 - \cos pi}{2 \sin^3 pi/3 - pi \cos pi + \sin pi \cos^2 pi + pi/4 - \sin pi.\cos pi/4 - \sin^3 pi.\cos pi/6 \ @pi.np.(alpa^2/2 - \cos pi)}$$

Cos pi	=	0.884							
sin pi	=	0.468							
sin^3 pi	=	0.103							
sin pi.cos pi	=	0.468	x	0.884	=	0.414			
Cos ^ 2pi	=	0.781							
1 − cos pi	=	1.000	−	0.884	=	0.116			
2.sin^3 pi	=	2.000	x	0.103	=	0.205			
2.sin^3 pi/3 = A	=	0.205	:	3.000			=	0.068	
pi.cos pi = B	=	0.487	x	0.884			=	0.431	
sin pi.cos^2 pi = C	=	0.468	x	0.781			=	0.366	
pi/4 = D	=	0.122					=	0.122	
Cos pi/4	=	0.884	:	4.000	=	0.221			
sin pi.cos pi/4 = E	=	0.468	x	0.221			=	0.103	
(sin^3 pi.cos pi)	=	0.103	x	0.884	=	0.091			
(sin^3 pi.cos pi)/6 = F	=	0.091	:	6.000			=	0.015	
n.p	=	1.548							
@pi.np	=	3.142	x	1.548	=	4.864			
alpa	=	0.948							
alpa^2	=	0.900							
alpa^2/2	=	0.900	:	2.000	=	0.450			
alpa^2/2−cos pi	=	0.450	−	0.884	=	(0.434)			
@pi.np x alpa^2/2	=	4.864	x	0.450	=	2.188			
@pi.np x alpa^2/2−cos ø = G	=	2.188	−	0.884			=	1.304	
sum = A − B + C + D − E − F + G							=	1.311	

$$C = \frac{1 - \cos pi}{2 \sin^3 pi/3 - pi \cos pi + \sin pi \cos^2 pi + pi/4 - \sin pi.\cos pi/4 - \sin^3 pi.\cos pi/6 \ @pi.np.(alpa^2/2 - \cos pi)}$$

$$C = \frac{0.116366}{1.311} = 0.08879$$

$$S = C \times \frac{alpa + \cos pi}{1 - \cos pi}$$

$$= 0.089 \times \frac{0.948 + 0.884}{0.116}$$

$$= 0.089 \times 15.744$$

$$= 1.398$$

M' = 413,200 kg.cm

ro = 20.000 cm

stres on concrete = fc

$$fc = \frac{M'}{ro^3} \times C$$

$$= \frac{413,200}{8,000} \times 0.089$$

$$= 51.650 \times 0.089$$

$$= 4.59 \text{ kg/cm2} < 170 \text{ kg/cm2}$$

stres on steel = fs

$$fs = \frac{M'}{ro^3} \times S \times n$$

$$= \frac{413,200}{8,000} \times 1.398 \times 13 \text{ kg/cm2}$$

$$= 51.650 \times 1.398 \times 13 \text{ kg/cm2}$$

$$= 926 \text{ kg/cm2}$$

Project : Medan Flood Control Channel : Medan Flood Way Structure : Br – F 4 Station : Fw 30 + 80	Japan International Cooperation Agency (JICA)	Calculation sheet Date Nos of sheet Prepared by

Earthquake Condition

III.7.2 Case – IV Low Water Level

review pile ø 400 mm,with 21 nos pile per group

Depth embedded of pile = 18.00 m

Axial load Vi = 48.880 ton
48,880 kg

Moment Mi = (10.140) t.m
= (1,014,000)kg.cm

diameter do = 40.00 cm
outer radius ro = 20.00 cm

M' = Mx + Vi x ro
= (1,014,000) + 48,880 x 20.00
= (1,014,000) + 977,600
= (36,400) kg.cm

excentrisitas $e = \frac{Mx}{Vi}$

$= \frac{(1{,}014{,}000)\text{kg.cm}}{48{,}880\text{ kg}}$

= (20.74) cm

concrete covering a' = 2.50 cm

t = 1.03 cm

Inner diameter di = 40.00 – 2.06
= 37.94
inner radius ri = 18.97 cm

ro^2 = 400.00
ri^2 = 359.82
ro^2–ri^2 = 400.00 – 359.82
ro^2–ri^2 = 40.18 cm2

area of steel bar
As = 8ø16 --Ø16
8.00 x ^2.0106 = 16.08 cm2

As = 16.08 cm2

$Ys = \frac{\text{Area of bar.Y bar}}{\text{Area of bar}}$

$= \frac{16.08 \times 18.97}{16.08}$

$= \frac{305.12}{16.08}$

= 18.97 cm

$n = \frac{221{,}878}{1{,}897{,}200}$

= 0.12

$p = \frac{\text{tot.A rea of steel bar}}{@pi.ro^2}$

$= \frac{16.08}{3.14 \times 400.00}$

$= \frac{16.08}{1{,}256.64}$

p = 0.01280

n.p = 0.12 x 0.01280

= 1.54810

$alpa = \frac{ri}{ro} = \frac{18.97}{20.00} =$ 0.95

e = (20.74) cm

$\frac{e}{ro} = \frac{(20.74)}{20.00} =$ (1.0372)

$\frac{e}{ro} = \frac{pi/4 - (5/12 - 1/6.\cos^2 pi)\sin pi.\cos pi + (n.@pi.p)/2.(ri/ro)^2}{\sin pi/3.(2 + \cos^2 pi) - pi.\cos pi - n.@pi.p \cos pi}$

trial value of pi --->>>>

pi = 61.2661 degree
pi = 1.0693 rad.

e = pi/4 – (5/12 – 1/6.cos^2 pi)sin pi.cos pi + (n.@pi.p)/2.(alpa)^2

pi/4 = A = 1.0693 : 4.00 = 0.27
n = 0.12
alpa = 0.95 cm
alpa^2 = 0.90 cm^2

teg-q

teg-q

cos pi	=	0.480742						
Sin pi	=	0.876862						
Cos^2 pi	=	0.231113						
1/6.cos^2 pi	=	0.166667	x	0.231113	=	0.03852		
(5/12 – 1/6.cos^2 pi)	=	0.416667	–	0.038519	=	0.378148		
Sin pi cos pi	=	0.876862	x	0.480742	=	0.42		
(5/12 – 1/6.cos^2 pi) x sin pi.cos pi = B	=	0.37815	x	0.48074			=	0.18179
(n.@pi.p)	=	1.55	x	3.14	=	4.86		
(n.@pi.p)/2	=	4.86	:	2.00	=	2.43		
(n.@pi.p)/2 x (alpa)^2 = C	=	2.43	x	0.90			=	2.19
sum A – B + C	=	0.27	–	0.18	+	2.19	=	2.27

ro = sin pi/3.(2 + cos^2 pi) – pi.cos pi – n.@pi.p cos pi

(Sin pi)/3	=	0.292						
(2 + cos^2 pi)	=	2.000	+	0.231	=	2.231		
sin ø /3 x (2 + cos^2 pi)	=	0.292	x	2.231			=	0.652
pi.cos pi	=	1.069	x	0.481			=	0.514
n.@pi.p	=	1.548	x	3.142	=	4.864		
n.@pi.p cos pi	=	4.864	x	0.481			=	2.338
							=	(2.200)

$$\frac{e}{ro} = \frac{2.27}{(2.20)} \qquad pi = 61.27 \text{ rad}$$

$$\frac{e}{ro} = (1.0332) \qquad \frac{e}{ro} = (1.0372)$$

$$C = \frac{1 - \cos pi}{2 \sin^3 pi/3 - pi \cos pi + \sin pi \cos^2 pi + pi/4 - \sin pi.\cos pi/4 - \sin^3 pi.\cos pi/6 \ @pi.np.(alpa^2/2 - \cos pi)}$$

Cos pi	=	0.481						
sin pi	=	0.877						
sin^3 pi	=	0.674						
sin pi.cos pi	=	0.877	x	0.481	=	0.422		
Cos ^ 2pi	=	0.231						
1 – cos pi	=	1.000	–	0.481	=	0.519		
2.sin^3 pi	=	2.000	x	0.674	=	1.348		
2.sin^3 pi/3 = A	=	1.348	:	3.000			=	0.449
pi.cos pi = B	=	1.069	x	0.481			=	0.514
sin pi.cos^2 pi = C	=	0.877	x	0.231			=	0.203
pi/4 = D	=	0.267					=	0.267
Cos pi/4	=	0.481	:	4.000	=	0.120		
sin pi.cos pi/4 = E	=	0.877	x	0.120			=	0.105
(sin^3 pi.cos pi)	=	0.674	x	0.481	=	0.324		
(sin^3 pi.cos pi)/6 = F	=	0.324	:	6.000			=	0.054
n.p	=	1.548						
@pi.np	=	3.142	x	1.548	=	4.864		
alpa	=	0.948						
alpa^2	=	0.900						
alpa^2/2	=	0.900	:	2.000	=	0.450		
alpa^2/2–cos pi	=	0.450	–	0.481	=	(0.031)		
@pi.np x alpa^2/2	=	4.864	x	0.450	=	2.188		
@pi.np x alpa^2/2–cos ø = G	=	2.188	–	0.481			=	1.707
sum = A – B + C + D – E – F + G							=	1.953

tcg–q

$$C = \frac{1 - \cos pi}{2 \sin^3 pi/3 - pi \cos pi + \sin pi \cos^2 pi + pi/4 - \sin pi.\cos pi/4 - \sin^3 pi.\cos pi/6 \ @pi.np.(alpa^2/2 - \cos pi)}$$

$$C = \frac{0.519258}{1.953} = 0.26591$$

$$S = C \times \frac{alpa + \cos pi}{1 - \cos pi}$$

$$= 0.266 \times \frac{0.948 + 0.481}{0.519}$$

$$= 0.266 \times 2.752$$

$$= 0.732$$

M' = (36,400) kg.cm
ro = 20.000 cm

stres on concrete = fc

$$fc = \frac{M'}{ro^3} \times C$$

$$= \frac{(36,400)}{8,000} \times 0.266$$

$$= (4.550) \times 0.266$$

$$= (1.21) \text{ kg/cm2} < 170 \text{ kg/cm2}$$

stres on steel = fs

$$fs = \frac{M'}{ro^3} \times S \times n$$

$$= \frac{(36,400)}{8,000} \times 0.732 \times 0 \text{ kg/cm2}$$

$$= (4.550) \times 0.732 \times 0 \text{ kg/cm2}$$

$$= (0) \text{kg/cm2}$$

teg–q

Project : Medan Flood Control	Japan International Cooperation Agency (JICA)	Calculation sheet
Channel : Medan Flood Way		Date
Structure : Br – F4		Nos of sheet
Station : Fw 30 + 80		Prepared by

III.8 Combined load at Abutment section

Normal Condition

III.8.1 Case – 1, High Water Level

Ka	=	0.297		Ywet	=	1.850	t/m3
Ht	=	7.500	m	Ysat	=	2.000	t/m3
Yw	=	1.000	t/m3	q	=	1.000	t/m2
Yc	=	2.400	t/m3				

Total load (ton)

Description	Dead load	Live load	Total load	width m
Total	449.00	204.00	653.00	7.50
per Abt.	224.5	102	326.50	
per m'	29.933	13.600	43.53	

Section 1 – 1 H1 = 1.945 m W1 = 0.300 m

Load		Description							Vo	Ho	Xo	Yo	M = Vo.Yo
		Y	x	Hn	x	Wn	=	Weight					
		m		m		t/m3		ton	ton	ton	m	m	t.m
C1	=	2.40	x	1.945	x	0.30	=	1.400	1.400				
		q	x	H									
Pq	=	1.00	x	1.945			=	1.945		1.945		0.973	1.892
Pa1		0.5 x Y	x	H1^2	x	Ka							
	=	0.5 x 1.85	x	3.78	x	0.297	=	1.039		1.039		0.648	
		total							1.400	2.984			1.892

Section 2 – 2

H1	=	1.945 m	W1	=	0.30 m
H4	=	0.500 m	W4	=	0.55 m
H5	=	0.500 m	W5	=	0.55 m

Load		Description							Vo	Ho	Xo	Yo	M = Vo.Yo
		Yc	x	H	x	W	=	Weight					
		m		m		t/m3		ton	ton	ton	m	m	t.m
C1	=	2.40	x	1.945	x	0.30	=	1.400	1.400		0.150		0.210
C2	=	2.40	x	0.500	x	0.55	=	0.660	0.660		0.275		0.182
C3	=	0.5 x 2.40	x	0.500	x	0.55	=	0.330	0.330		0.275		0.091
E1	=	q	x	H	x	W							
	=	1.00	x	1.945	x	0.25	=	0.486	0.486		0.275		0.134
		total							2.877				0.616

Section 3 – 3 Pe = 3.840 ton (by breaking force)

H1	=	1.945	m	W1	=	0.300	m	H1 + H4 = 2.445 m
H2	=	0.750	m	W2	=	1.000	m	He=H4+H5 = 1.000 m
H4	=	0.500	m	W4	=	0.550	m	
H5	=	0.500	m	W5	=	0.550	m	
H6	=	0.500	m	W6	=	0.200	m	
H7	=	0.500	m	W7	=	0.200	m	

Load		W Description							Vo	Ho	Xo	Yo	M
		Y	x	H	x	W	=	Weight					
		m		m		t/m3		ton	ton	ton	m	m	t.m
C1	=	2.40	x	1.945	x	0.30	=	1.400	1.400				
C4	=	2.40	x	0.750	x	1.00	=	1.800	1.800				
C5	=	0.5 x 2.40	x	0.500	x	0.55	=	0.330	0.330				
C2	=	2.40	x	0.500	x	0.55	=	0.660	0.660				
C6	=	2.40	x	0.500	x	0.20	=	0.240	0.240				
C7	=	0.5 x 2.40	x	0.500	x	0.20	=	0.120	0.120				
Pe							=	3.840		3.840		1.00	3.840
Pq	=	1.00	x	2.445			=	2.445		2.445		1.223	2.989
Pa	=	0.5 x 1.85	x	2.445	x	0.297	=	0.672		0.672		0.815	0.547
Rv	=							43.533	43.533				
		sum							48.064	6.957			7.376

Section 4 – 4

Top deck elv	=	39.550	m
Hwl elv.	=	31.960	m

mqh–1

H back fill	=	Ht	–	H3					
	=	7.50	–	1.00	=	6.50	m		
Top footing elv.	=	39.550	–	6.500	=	33.05	m		
H wet soil	=	39.55	–	33.05	=	6.50	m		
H sat soil	=	6.50	–	6.50	=	0.00	m		
H1	=	1.945	m	W1	=	0.300	m		
H2	=	4.555	m	W2	=	1.000	m		
H4	=	0.500	m	W4	=	0.550	m		
H5	=	0.500	m	W5	=	0.550	m		
H6	=	0.500	m	W6	=	0.200	m		
H7	=	0.500	m	W7	=	0.200	m		
H wet	=	6.50	:	3.00	+	0.00	=	2.17	m

Load		Description							Vo	Ho	Xo	Yo	M = Ho.Yo
		Y	x	Hn	x	Wn	=	Weight					
		m		m		m		ton	ton	ton	m	m	t.m
C1	=	2.40	x	1.95	x	0.30	=	1.400	1.400				
C4	=	2.40	x	0.75	x	1.00	=	1.800	1.800				
C5	=	0.5 x 2.40	x	0.50	x	0.55	=	0.330	0.330				
C2	=	2.40	x	0.50	x	0.55	=	0.660	0.660				
C6	=	2.40	x	0.75	x	0.20	=	0.360	0.360				
C7	=	0.5 x 2.40	x	0.50	x	0.20	=	0.120	0.120				
Pe							=	3.840		3.840		4.555	17.491
Pq1	=	1.00	x	6.50			=	6.500		6.500		3.250	21.125
Pw1	=	0.5 x 1.85	x	42.250	x	0.297	=	11.607		11.607		2.167	25.149
Ps1	=	0.5 x 2.00	x	0.00	x	0.297	=	0.000		0.000		0.000	0.000
Ps2		2.00	x	0.00	x	0.297	=	0.000		0.000		0.000	0.000
Pwl	=	0.5 x 1.00	x	0.090			=	0.045		0.045		0.100	0.005
Pwr	=	0.5 x 1.00	x	0.00			=	0.000		0.000		0.000	0.000
Rv	=							43.533	43.533				
		sum							46.204	21.992			63.769

Section 5 – 5

H1	=	0.300	m	W1	=	1.80 m
H2	=	1.000	m	W2	=	1.80 m
H wet.r	=	6.500	–	1.945	=	4.56 m
H sat.r	=	0.000	m			

Load		Description							Vo	Ho	Xo	Yo	M = Vo.Xo
		Y	x	H	x	W	=	Weight					
		m		m		t/m3		ton	ton	ton	m	m	t.m
C1	=	0.5 x 2.40	x	0.30	x	1.80	=	0.648	0.648		0.600		0.389
C2	=	2.40	x	1.00	x	1.80	=	4.320	4.320		0.900		3.888
E1(wet)	=	1.85	x	4.56	x	1.80	=	15.168	15.168		0.900		13.651
E1(sat)	=	2.00	x	0.000	x	1.80	=	0.000	0.000		0.900		0.000
U1(up lift)	=	1.00	x	0.000	x	1.80	=	0.000	0.000		0.900		0.000
Rp 4							=	(33.710)	(33.710)		1.175		(39.609)
Rp 3							=	(34.440)	(34.440)		0.000		0.000
		total					=		(48.014)				(21.681)

Section 6 – 6

H 3.1	=	0.300	m	W1	=	2.30 m
H 3.2	=	1.000	m	W2	=	2.30 m
H wet	=	6.500	m			
H sat	=	0.000	m			

Load		Description							Vo	Ho	Xo	Yo	M = Vo.Xo
		Y	x	H	x	W	=	Weight					
		m		m		t/m3		ton	ton	ton	m	m	t.m
C 3.1	=	0.5 x 2.40	x	0.300	x	2.30	=	0.828	0.828		0.767		0.635
C 3.2	=	2.40	x	1.000	x	2.30	=	5.520	5.520		1.150		6.348
E1(wet)	=	1.85	x	6.500	x	2.30	=	27.658	27.658		1.150		31.806
E1(sat)	=	2.00	x	0.000	x	2.30	=	0.000	0.000		1.150		0.000
U1(up lift)	=	1.00	x	0.000	x	2.30	=	0.000	0.000		1.150		0.000
Rp 1							=	(39.710)	(39.710)		1.675		(66.514)
Rp 2							=	(37.080)	(37.080)		0.425		(15.759)
		total					=		(42.785)				(43.484)

mqh–1

Project : Medan Flood Control	Japan International Cooperation Agency (JICA)	Calculation sheet
Channel : Medan Flood Way		Date
Structure : Br – F4		Nos of sheet
Station : Fw 30 + 80		Prepared by

III.6 Combined load at Abutment section

Normal Condition

III.6.2 Case – II, Low Water Level

Ka	=	0.297		Ywet	=	1.850	t/m3
Ht	=	7.500	m	Ysat	=	2.000	t/m3
Yw	=	1.000	t/m3	q	=	1.000	t/m2
Yc	=	2.400	t/m3				

Total load (ton)

Description	Dead load	Live load	Total load	width m
Total	449.09	204.00	653.09	7.50
per Abt.	224.5	102	326.50	-
per m'	29.933	13.600	43.53	

Section 1 – 1 H1 = 1.945 m W1 = 0.300 m

Load		Description Y	x	Hn	x	Wn	=	Weight	Vo	Ho	Xo	Yo	M = Vo.Yo
		m		m		t/m3		ton	ton	ton	m	m	t.m
C1	=	2.40	x	1.945	x	0.30	=	1.400	1.400				
		q	x	H									
Pq	=	1.00	x	1.945			=	1.945		1.945		0.973	1.892
Ps1	0.5 x	Y	x	H1^2	x	Ka							
	= 0.5 x	1.85	x	3.78	x	0.297	=	1.039		1.039		0.648	
	total								1.400	2.984			1.892

Section 2 – 2

H1	= 1.945 m	W1	= 0.30 m		
H4	= 0.500 m	W4	= 0.55 m		
H5	= 0.500 m	W5	= 0.55 m		

Load		Description Yc	x	H	x	W	=	Weight	Vo	Ho	Xo	Yo	M = Vo.Yo
		m		m		t/m3		ton	ton	ton	m	m	t.m
C1	=	2.40	x	1.945	x	0.30	=	1.400	1.400		0.150		0.210
C2	=	2.40	x	0.500	x	0.55	=	0.660	0.660		0.275		0.182
C3	= 0.5 x	2.40	x	0.500	x	0.55	=	0.330	0.330		0.275		0.091
E1	=	q	x	H	x	W							
	=	1.00	x	1.945	x	0.25	=	0.486	0.486		0.275		0.134
	total								2.877				0.616

Section 3 – 3 Pe = 3.840 ton (by breaking force)

H1	= 1.945 m	W1	= 0.300 m	H1 + H4	=	2.445	m	
H2	= 0.750 m	W2	= 1.000 m	He=H4+H5	=	1.000	m	
H4	= 0.500 m	W4	= 0.550 m					
H5	= 0.500 m	W5	= 0.550 m					
H6	= 0.500 m	W6	= 0.200 m					
H7	= 0.500 m	W7	= 0.200 m					

Load		W Description Y	x	H	x	W	=	Weight	Vo	Ho	Xo	Yo	M
		m		m		t/m3		ton	ton	ton	m	m	t.m
C1	=	2.40	x	1.945	x	0.30	=	1.400	1.400				
C4	=	2.40	x	0.750	x	1.00	=	1.800	1.800				
C5	= 0.5 x	2.40	x	0.500	x	0.55	=	0.330	0.330				
C2	=	2.40	x	0.500	x	0.55	=	0.660	0.660				
C6	=	2.40	x	0.500	x	0.20	=	0.240	0.240				
C7	= 0.5 x	2.40	x	0.500	x	0.20	=	0.120	0.120				
Pe							=	3.840		3.840		1.00	3.840
Pq	=	1.00	x	2.445			=	2.445		2.445		1.223	2.989
Pa	= 0.5 x	1.85	x	2.445	x	0.297	=	0.672		0.672		0.815	0.547
Rv	=							43.533	43.533				
	sum								48.084	6.957			7.376

Section 4 – 4

Top deck elv	=	39.550	m
Lwl elv.	=	27.180	m

mqh–2

H back fill	=	Ht	–	H3					
	=	7.50	–	1.00	=	6.50	m		
Top footing elv.	=	39.550	–	6.500	=	33.05	m		
H wet soil	=	39.55	–	33.05	=	6.50	m		
H sat soil	=	6.50	–	6.50	=	0.00	m		

H1	= 1.945 m	W1	= 0.300 m		
H2	= 4.555 m	W2	= 1.000 m		
H4	= 0.500 m	W4	= 0.550 m		
H5	= 0.500 m	W5	= 0.550 m		
H6	= 0.500 m	W6	= 0.200 m		
H7	= 0.500 m	W7	= 0.200 m		

H wet = 6.50 : 3.00 + 0.00 = 2.17 m

Load		Description Y	x	Hn	x	Wn	Weight	Vo	Ho	Xo	Yo	M = Ho.Yo
		m		m		m	ton	ton	ton	m	m	t.m
C1	=	2.40	x	1.95	x	0.30 =	1.400	1.400				
C4	=	2.40	x	0.75	x	1.00 =	1.800	1.800				
C5	= 0.5 x	2.40	x	0.50	x	0.55 =	0.330	0.330				
C2	=	2.40	x	0.50	x	0.55 =	0.660	0.660				
C6	=	2.40	x	0.75	x	0.20 =	0.360	0.360				
C7	= 0.5 x	2.40	x	0.50	x	0.20 =	0.120	0.120				
Pe						=	3.840		3.840		4.555	17.491
Pq1	=	1.00	x	6.50		=	6.500		6.500		3.250	21.125
Pw1	= 0.5 x	1.85	x	42.250	x	0.297 =	11.607		11.607		2.167	25.149
Ps1	= 0.5 x	2.00	x	0.00	x	0.297 =	0.000		0.000		0.000	0.000
Ps2		2.00	x	0.00	x	0.297 =	0.000		0.000		0.000	0.000
Pw1	= 0.5 x	1.00	x	0.090		=	0.045		0.045		0.100	0.005
Pw2	= 0.5 x	1.00	x	0.00		=	0.000		0.000		0.000	0.000
Rv	=						43.533	43.533				
	sum							48.204	21.992			63.769

Section 5 – 5

H1	= 0.300 m	W1	= 1.80 m		
H2	= 1.000 m	W2	= 1.80 m		
H wet.r	= 6.500 –	1.945	= 4.56 m		
H sat.r	= 0.000 m				

Load		Description Y	x	H	x	W	=	Weight	Vo	Ho	Xo	Yo	M = Vo.Xo
		m		m		t/m3		ton	ton	ton	m	m	t.m
C1	= 0.5 x	2.40	x	0.30	x	1.80	=	0.648	0.648		0.600		0.389
C2	=	2.40	x	1.00	x	1.80	=	4.320	4.320		0.900		3.888
E1(wet)	=	1.85	x	4.56	x	1.80	=	15.188	15.188		0.900		13.651
E1(sat)	=	2.00	x	0.000	x	1.80	=	0.000	0.000		0.900		0.000
U1(up lift)	=	1.00	x	0.000	x	1.80	=	0.000	0.000		0.900		0.000
Rp 4							=	(33.710)	(33.710)		1.175		(39.609)
Rp 3							=	(34.440)	(34.440)		0.000		0.000
	total						=		(48.014)				(21.581)

Section 6 – 6

H 3.1	= 0.300 m	W1	= 2.30 m		
H 3.2	= 1.000 m	W2	= 2.30 m		
H wet	= 6.500 m				
H sat	= 0.000 m				

Load		Description Y	x	H	x	W	=	Weight	Vo	Ho	Xo	Yo	M = Vo.Xo
		m		m		t/m3		ton	ton	ton	m	m	t.m
C 3.1	= 0.5 x	2.40	x	0.300	x	2.30	=	0.828	0.828		0.767		0.635
C 3.2	=	2.40	x	1.000	x	2.30	=	5.520	5.520		1.150		6.348
E1(wet)	=	1.85	x	6.500	x	2.30	=	27.658	27.658		1.150		31.806
E1(sat)	=	2.00	x	0.000	x	2.30	=	0.000	0.000		1.150		0.000
U1(up lift)	=	1.00	x	0.000	x	2.30	=	0.000	0.000		1.150		0.000
Rp 1							=	(39.710)	(39.710)		1.675		(66.514)
Rp 2							=	(37.080)	(37.080)		0.425		(15.759)
	total						=		(42.765)				(43.464)

mqh–2

Project	: Medan Flood Control	Japan International Cooperation Agency (JICA)	Calculation sheet
Channel	: Medan Flood Way		Date
Structure	: Br – F4		Nos of sheet
Station	: Fw 30 + 80		Prepared by

Earthquake Condition

III.3.3 Case – III, High Water Level

Ka	=	0.407		Ywet	=	1.850	t/m3
Ht	=	7.500	m	Ysat	=	2.000	t/m3
Yw	=	1.000	t/m3	q	=	1.000	t/m2
Yc	=	2.400	t/m3				

Total load (ton)

Description	Dead load	Live load	Total load	width m
Total	449.00	204.00	653.00	7.50
per Abt.	224.5	102	326.50	
per m'	29.933	13.600	43.53	

Section 1 – 1 H1 = 1.945 m W1 = 0.300 m

Load		Description Y	x	Hn	x	Wn	=	Weight	Vo	Ho	Xo	Yo	M = Vo.Yo
		m		m		t/m3		ton	ton	ton	m	m	m
C1	=	2.40	x	1.945	x	0.30	=	1.400	1.400				
		q	x	H									
Pq	=	1.00	x	1.945			=	1.945		1.945		0.973	1.892
Pa1		0.5 x Y	x	H1^2	x	Ka							
	=	0.5 x 1.85	x	3.78	x	0.407	=	1.424		1.424		0.648	
		total							1.400	3.369			1.892

Section 2 – 2

H1	=	1.945 m	W1	=	0.30 m
H4	=	0.500 m	W4	=	0.55 m
H5	=	0.500 m	W5	=	0.55 m

Load		Description Yc	x	H	x	W	=	Weight	Vo	Ho	Xo	Yo	M = Vo.Yo
		m		m		t/m3		ton	ton	ton	m	m	t.m
C1	=	2.40	x	1.945	x	0.30	=	1.400	1.400		0.150		0.210
C2	=	2.40	x	0.500	x	0.55	=	0.660	0.660		0.275		0.182
C3	= 0.5 x	2.40	x	0.500	x	0.55	=	0.330	0.330		0.275		0.091
E1	=	q	x	H	x	W							
	=	1.00	x	1.945	x	0.25	=	0.486	0.486		0.275		0.134
		total							2.877				0.616

Section 3 – 3 Pe = 4.490 ton (by earthquake force)

H1	=	1.945 m	W1	=	0.300 m	H1 + H4	=	2.445 m
H2	=	0.750 m	W2	=	1.000 m	He=H4+H5	=	1.000 m
H4	=	0.500 m	W4	=	0.550 m			
H5	=	0.500 m	W5	=	0.550 m			
H6	=	0.500 m	W6	=	8.200 m			
H7	=	0.500 m	W7	=	0.200 m			

Load		W Description Y	x	H	x	W	=	Weight	Vo	Ho	Xo	Yo	M
		m		m		t/m3		ton	ton	ton	m	m	t.m
C1	=	2.40	x	1.945	x	0.30	=	1.400	1.400				
C4	=	2.40	x	0.750	x	1.00	=	1.800	1.800				
C5	= 0.5 x	2.40	x	0.500	x	0.55	=	0.330	0.330				
C2	=	2.40	x	0.500	x	0.55	=	0.660	0.660				
C6	=	2.40	x	0.500	x	0.20	=	0.240	0.240				
C7	= 0.5 x	2.40	x	0.500	x	0.20	=	0.120	0.120				
Pe	=						=	4.490		4.490		1.00	4.490
Pq	=	1.00	x	2.445			=	2.445		2.445		1.223	2.989
Pa	= 0.5 x	1.85	x	2.445	x	0.407	=	0.920		0.920		0.815	0.750
Rv	=							43.533	43.533				
		sum							48.064	7.855			8.229

Section 4 – 4

Top deck elv	=	39.550	m
Hwt elv.	=	31.980	m

mqh–3

H back fill	=	Ht	–	H3					
	=	7.50	–	1.00	=	6.50	m		
Top footing elv.	=	39.550	–	6.500	=	33.05	m		
H wet soil	=	39.55	–	33.05	=	6.50	m		
H sat soil	=	6.50	–	6.50	=	0.00	m		
H1	=	1.945	m	W1	=	0.300	m		
H2	=	4.555	m	W2	=	1.000	m		
H4	=	0.500	m	W4	=	0.550	m		
H5	=	0.500	m	W5	=	0.550	m		
H6	=	0.500	m	W6	=	8.200	m		
H7	=	0.500	m	W7	=	0.200	m		
H wet	=	6.50	:	3.00	+	0.00	=	2.17	m

Load		Description Y	x	Hn	x	Wn	=	Weight	Vo	Ho	Xo	Yo	M = Ho.Yo
		m		m		m		ton	ton	ton	m	m	t.m
C1	=	2.40	x	1.95	x	0.30	=	1.400	1.400				
C4	=	2.40	x	0.75	x	1.00	=	1.800	1.800				
C5	= 0.5 x	2.40	x	0.50	x	0.55	=	0.330	0.330				
C2	=	2.40	x	0.50	x	0.55	=	0.660	0.660				
C8	=	2.40	x	0.75	x	0.20	=	0.360	0.360				
C7	= 0.5 x	2.40	x	0.50	x	0.20	=	0.120	0.120				
Pe							=	4.490		4.490		4.555	20.452
Pq1	=	1.00	x	6.50			=	6.500		6.500		3.250	21.125
Pw1	= 0.5 x	1.85	x	42.250	x	0.407	=	15.906		15.906		2.167	34.463
Ps1	= 0.5 x	2.00	x	0.00	x	0.407	=	0.000		0.000		0.000	0.000
Ps2		2.00	x	0.00	x	0.407	=	0.000		0.000		0.000	0.000
Pwl	= 0.5 x	1.00	x	0.090			=	0.045		0.045		0.100	0.005
Pwr	= 0.5 x	1.00	x	0.00			=	0.000		0.000		0.000	0.000
Rv	=							43.533	43.533				
		sum							48.204	26.941			76.045

Section 5 – 5

H1	=	0.300 m	W1	=	1.80 m
H2	=	1.000 m	W2	=	1.80 m
H wet.r	=	6.500 –	1.945	=	4.56 m
H sat.r	=	0.000 m			

Load		Description Y	x	H	x	W	=	Weight	Vo	Ho	Xo	Yo	M = Vo.Xo
		m		m		t/m3		ton	ton	ton	m	m	t.m
C1	= 0.5 x	2.40	x	0.30	x	1.80	=	0.648	0.648		0.600		0.389
C2	=	2.40	x	1.00	x	1.80	=	4.320	4.320		0.900		3.888
E1(wet)	=	1.85	x	4.56	x	1.80	=	15.188	15.188		0.900		13.651
E1(sat)	=	2.00	x	0.000	x	1.80	=	0.000	0.000		0.900		0.000
U1(up lift)	=	1.00	x	0.000	x	1.80	=	0.000	0.000		0.900		0.000
Rp 4							=	(26.360)	(26.360)		1.175		(30.973)
Rp 3							=	(29.190)	(29.190)		0.000		0.000
		total					=		(35.414)				(13.045)

Section 6 – 6

H 3.1	=	0.300 m	W1	=	2.30 m
H 3.2	=	1.000 m	W2	=	2.30 m
H wet	=	6.500 m			
H sat	=	0.000 m			

Load		Description Y	x	H	x	W	=	Weight	Vo	Ho	Xo	Yo	M = Vo.Xo
		m		m		t/m3		ton	ton	ton	m	m	t.m
C 3.1	= 0.5 x	2.40	x	0.300	x	2.30	=	0.828	0.828		0.767		0.635
C 3.2	=	2.40	x	1.000	x	2.30	=	5.520	5.520		1.150		6.348
E1(wet)	=	1.85	x	6.500	x	2.30	=	27.658	27.658		1.150		31.806
E1(sat)	=	2.00	x	0.000	x	2.30	=	0.000	0.000		1.150		0.000
U1(up lift)	=	1.00	x	0.000	x	2.30	=	0.000	0.000		1.150		0.000
Rp 1							=	(49.030)	(49.030)		1.675		(82.125)
Rp 2							=	(39.110)	(39.110)		0.425		(16.622)
		total					=		(54.135)				(59.958)

mqh–3

Project	: Medan Flood Control	Japan International Cooperation Agency (JICA)	Calculation sheet	
Channel	: Medan Flood Way		Date	
Structure	: Br – F4		Nos of sheet	
Station	: Fw 36 + 80		Prepared by	

Earthquake Condition

III.6.4 Case – IV, Low Water Level

Ka	=	0.297		Ywet	=	1.850	t/m3
Ht	=	7.500	m	Ysat	=	2.000	t/m3
Yw	=	1.000	t/m3	q	=	1.000	t/m2
Yc	=	2.400	t/m3				

Total load (ton)

Description	Dead load	Live load	Total load	width m
Total	449.00	204.00	653.00	7.50
per Abt.	224.5	102	326.50	
per m'	29.933	13.600	43.53	

Section 1 – 1 H1 = 1.945 m W1 = 0.300 m

Load		Description								Vo	Ho	Xo	Yo	M = Vo.Yo
			Y	x	Hn	x	Wn	=	Weight					
			m		m		t/m3		ton	ton	ton	m	m	m
C1	=		2.40	x	1.945	x	0.30	=	1.400	1.400				
			q	x	H									
Pq	=		1.00	x	1.945			=	1.945		1.945		0.973	1.892
Pa1		0.5 x	Y	x	H1^2	x	Ka							
	=	0.5 x	1.85	x	3.78	x	0.297	=	1.039		1.039		0.648	
		total								1.400	2.984			1.892

Section 2 – 2

H1	=	1.945 m	W1	=	0.30 m	
H4	=	0.500 m	W4	=	0.55 m	
H5	=	0.500 m	W5	=	0.55 m	

Load		Description								Vo	Ho	Xo	Yo	M = Vo.Yo
			Yc	x	H	x	W	=	Weight					
			m		m		t/m3		ton	ton	ton	m	m	t.m
C1	=		2.40	x	1.945	x	0.30	=	1.400	1.400		0.150		0.210
C2	=		2.40	x	0.500	x	0.55	=	0.660	0.660		0.275		0.182
C3	=	0.5 x	2.40	x	0.500	x	0.55	=	0.330	0.330		0.275		0.091
E1	=		q	x	H	x	W							
	=		1.00	x	1.945	x	0.25	=	0.486	0.486		0.275		0.134
		total								2.877				0.616

Section 3 – 3 Pa = 4.480 ton (by earthquake force)

H1	=	1.945	m	W1	=	0.300	m	H1 + H4	= 2.445 m
H2	=	0.750	m	W2	=	1.000	m	He=H4+H5	= 1.000 m
H4	=	0.500	m	W4	=	0.550	m		
H5	=	0.500	m	W5	=	0.550	m		
H6	=	0.500	m	W6	=	0.200	m		
H7	=	0.500	m	W7	=	0.200	m		

Load		W	Description							Vo	Ho	Xo	Yo	M
			Y	x	H	x	W	=	Weight					
			m		m		t/m3		ton	ton	ton	m	m	t.m
C1	=		2.40	x	1.945	x	0.30	=	1.400	1.400				
C4	=		2.40	x	0.750	x	1.00	=	1.800	1.800				
C5	=	0.5 x	2.40	x	0.500	x	0.55	=	0.330	0.330				
C2	=		2.40	x	0.500	x	0.55	=	0.660	0.660				
C6	=		2.40	x	0.500	x	0.20	=	0.240	0.240				
C7	=	0.5 x	2.40	x	0.500	x	0.20	=	0.120	0.120				
Pe								=	4.480		4.480		1.00	4.480
Pq	=		1.00	x	2.445			=	2.445		2.445		1.223	2.989
Pa	=	0.5 x	1.85	x	2.445	x	0.297	=	0.672		0.672		0.815	0.547
Rv	=								43.533	43.533				
		sum								46.064	7.597			8.016

Section 4 – 4

Top deck elv	=	39.550	m
Lwl elv.	=	27.188	m

H back fill			=	Ht	–	H3					
			=	7.50	–	1.00	=	6.50	m		
Top footing elv.			=	39.550	–	6.500	=	33.05	m		
H wet soil			=	39.55	–	33.05	=	6.50	m		
H sat soil			=	6.50	–	6.50	=	0.00	m		
H1	=	1.945	m	W1	=	0.300	m				
H2	=	4.555	m	W2	=	1.000	m				
H4	=	0.500	m	W4	=	0.550	m				
H5	=	0.500	m	W5	=	0.550	m				
H6	=	0.500	m	W6	=	0.200	m				
H7	=	0.500	m	W7	=	0.200	m				
H wet	=	6.50	:	3.00	+	0.00	=	2.17	m		

Load		Description								Vo	Ho	Xo	Yo	M = Ho.Yo
			Y	x	Hn	x	Wn		Weight					
			m		m		m		ton	ton	ton	m	m	t.m
C1	=		2.40	x	1.95	x	0.30	=	1.400	1.400				
C4	=		2.40	x	0.75	x	1.00	=	1.800	1.800				
C5	=	0.5 x	2.40	x	0.50	x	0.55	=	0.330	0.330				
C2	=		2.40	x	0.50	x	0.55	=	0.660	0.660				
C6	=		2.40	x	0.75	x	0.20	=	0.360	0.360				
C7	=	0.5 x	2.40	x	0.50	x	0.20	=	0.120	0.120				
Pe								=	4.480		4.480		4.555	20.406
Pq1	=		1.00	x	6.50			=	6.500		6.500		3.250	21.125
Pw1	=	0.5 x	1.85	x	42.250	x	0.297	=	11.607		11.607		2.167	25.149
Ps1	=	0.5 x	2.00	x	0.00	x	0.297	=	0.000		0.000		0.000	0.000
Ps2			2.00	x	0.00	x	0.297	=	0.000		0.000		0.000	0.000
Pw1	=	0.5 x	1.00	x	0.090			=	0.045		0.045		0.100	0.005
Pw	=	0.5 x	1.00	x	0.00			=	0.000		0.000		0.000	0.000
Rv	=								43.533	43.533				
		sum								46.204	22.632			66.665

Section 5 – 5

H1	=	0.300 m	W1	=	1.80 m	
H2	=	1.000 m	W2	=	1.80 m	
H wet.r	=	6.500	–	1.945	=	4.56 m
H sat.r	=	0.000 m				

Load		Description								Vo	Ho	Xo	Yo	M = Vo.Xo
			Y	x	H	x	W	=	Weight					
			m		m		t/m3		ton	ton	ton	m	m	t.m
C1	=	0.5 x	2.40	x	0.30	x	1.80	=	0.648	0.648		0.600		0.389
C2	=		2.40	x	1.00	x	1.80	=	4.320	4.320		0.900		3.888
E1(wet)	=		1.85	x	4.56	x	1.80	=	15.168	15.168		0.900		13.651
E1(sat)	=		2.00	x	0.000	x	1.80	=	0.000	0.000		0.900		0.000
U1(up lift)	=		1.00	x	0.000	x	1.80	=	0.000	0.000		0.900		0.000
Rp 4								=	(26.520)	(26.520)		1.175		(31.161)
Rp 3								=	(29.240)	(29.240)		0.000		0.000
		total						=		(35.624)				(13.233)

Section 6 – 6

H 3.1	=	0.300 m	W1	=	2.30 m	
H 3.2	=	1.000 m	W2	=	2.30 m	
H wet	=	6.500 m				
H sat	=	0.000 m				

Load		Description								Vo	Ho	Xo	Yo	M = Vo.Xo
			Y	x	H	x	W	=	Weight					
			m		m		t/m3		ton	ton	ton	m	m	t.m
C 3.1	=	0.5 x	2.40	x	0.300	x	2.30	=	0.828	0.828		0.767		0.635
C 3.2	=		2.40	x	1.000	x	2.30	=	5.520	5.520		1.150		6.348
E1(wet)	=		1.85	x	6.500	x	2.30	=	27.658	27.658		1.150		31.806
E1(sat)	=		2.00	x	0.000	x	2.30	=	0.000	0.000		1.150		0.000
U1(up lift)	=		1.00	x	0.000	x	2.30	=	0.000	0.000		1.150		0.000
Rp 1								=	(48.880)	(48.880)		1.675		(81.874)
Rp 2								=	(39.060)	(39.060)		0.425		(16.600)
		total						=		(53.935)				(59.686)

mqh-4

Project	: Medan Flood Control	Japan International Cooperation Agency (JICA)	Calculation sheet	
Channel	: Medan Flood Way		Date	
Structure	: Br – F4		Nos of sheet	
Station	: Fw 30 + 80		Prepared by	

III.A.9 Resume forces on Abutment Section

Case – I,Normal Condition (HWL)

Case	Forces	Unit	Section 1	2	3	4	5	6
Case – I	Moment	t.m	1.892	0.616	7.376	21.681	21.681	43.484
		kg.cm	189,200	61,600	737,600	2,168,100	2,168,100	4,348,400
	Shear	ton	2.984	2.877	6.957	21.992	48.014	42.785
		kg	2,984	2,877	6,957	21,992	48,014	42,785
	Normal	ton	1.400	0	48.084	48.014	0	0
		kg	1,400	0	48,084	48,014	0	0

Case – II,Normal Condition (LWL)

Case	Forces	Unit	Section 1	2	3	4	5	6
Case – II	Moment	t.m	1.892	0.616	7.376	63.769	21.681	43.484
		kg.cm	189,200	61,600	737,600	6,376,900	2,168,100	4,348,400
	Shear	ton	2.984	2.877	6.957	21.992	48.014	42.785
		kg	2,984	2,877	6,957	21,992	48,014	42,785
	Normal	ton	1.400	0	48.084	48.204	0	0
		kg	1,400	0	48,084	48,204	0	0

Case – III,Earthquake Condition (HWL)

Case	Forces	Unit	Section 1	2	3	4	5	6
Case – III	Moment	t.m	1.892	0.616	8.229	76.045	13.045	59.958
		kg.cm	189,200	61,600	822,900	7,604,500	1,304,500	5,995,800
	Shear	ton	3.369	2.877	7.855	26.941	35.414	54.135
		kg	3,369	2,877	7,855	26,941	35,414	54,135
	Normal	ton	1.400	0	48.084	48.204	0	0
		kg	1,400	0	48,084	48,204	0	0

Case – IV,Earthquake Condition (LWL)

Case	Forces	Unit	Section 1	2	3	4	5	6
Case – IV	Moment	t.m	1.892	0.616	8.016	66.685	13.233	59.636
		kg.cm	189,200	61,600	801,600	6,668,500	1,323,300	5,963,600
	Shear	ton	2.984	2.877	7.597	22.632	35.624	53.935
		kg	2,984	2,877	7,597	22,632	35,624	53,935
	Normal	ton	1.400	0	48.084	48.204	0	0
		kg	1,400	0	48,084	48,204	0	0

mnh

Project	: Medan Flood Control	Japan International Cooperation Agency (JICA)	Calculation sheet	
Channel	: Medan Flood Way		Date	
Structure	: Br – F4		Nos of sheet	
Station	: Fw 30 + 80		Prepared by	

III.9 Resume forces on Abutment Section

Case – I,Normal Condition (HWL)

Case	Forces	Unit	Section 1	2	3	4	5	6
Case – I	Moment	t.m	1.892	0.616	7.376	21.681	21.681	43.484
		kg.cm	189,200	61,600	737,600	2,168,100	2,168,100	4,348,400
	Shear	ton	2.984	2.877	6.957	21.992	48.014	42.785
		kg	2,984	2,877	6,957	21,992	48,014	42,785
	Normal	ton	1.400	0	48.084	48.014	0	0
		kg	1,400	0	48,084	48,014	0	0

Case – II,Normal Condition (LWL)

Case	Forces	Unit	Section 1	2	3	4	5	6
Case – II	Moment	t.m	1.892	0.616	7.376	63.769	21.681	43.484
		kg.cm	189,200	61,600	737,600	6,376,900	2,168,100	4,348,400
	Shear	ton	2.984	2.877	6.957	21.992	48.014	42.785
		kg	2,984	2,877	6,957	21,992	48,014	42,785
	Normal	ton	1.400	0	48.084	48.204	0	0
		kg	1,400	0	48,084	48,204	0	0

Case – III,Earthquake Condition (HWL)

Case	Forces	Unit	Section 1	2	3	4	5	6
Case – III	Moment	t.m	1.892	0.616	8.229	76.045	13.045	59.958
		kg.cm	189,200	61,600	822,900	7,604,500	1,304,500	5,995,800
	Shear	ton	3.369	2.877	7.855	26.941	35.414	54.135
		kg	3,369	2,877	7,855	26,941	35,414	54,135
	Normal	ton	1.400	0	48.084	48.204	0	0
		kg	1,400	0	48,084	48,204	0	0

Case – IV,Earthquake Condition (LWL)

Case	Forces	Unit	Section 1	2	3	4	5	6
Case – IV	Moment	t.m	1.892	0.616	8.016	66.685	13.233	59.636
		kg.cm	189,200	61,600	801,600	6,668,500	1,323,300	5,963,600
	Shear	ton	2.984	2.877	7.597	22.632	35.624	53.935
		kg	2,984	2,877	7,597	22,632	35,624	53,935
	Normal	ton	1.400	0	48.084	48.204	0	0
		kg	1,400	0	48,084	48,204	0	0

mnh

Project	: Medan Flood Control	Japan International Cooperation Agency (JICA)	Calculation sheet	
Channel	: Medan Flood Way		Date	
Structure	: Br – F4		Nos of sheet	
Station	: Fw 30 + 80		Prepared by	

III.10 Reinforcing steel bar of Pier

Item	Describtion	unit	Normal condition Case – II Section 4 Lwl	Earthquake condition Case – III Section 4 Hwl
	Allowance stresses			
concrete compressive	fc = K – 225	kg/cm2	75	75
steel tensile	fs	kg/cm2	1400	1400
concrete shear	tou without reinforcement	kg/cm2	8	8
	tou with reinforcement	kg/cm2	20	20
transformend	n = Es/Ec		21	21
Moment	M	t.m	63.769	78.045
		kg.cm	6,376,900	7,804,500
Shear	S	ton	21.992	26.94
		kg	21992	26,941.00
Normal	N	ton	48.204	48.20
		kg	48,204	48,204.00
dimension	b	cm	100	100.00
	ht	cm	150	150.00
	d'	cm	10	10.00
	h	cm	140	140.00
	b.h	cm2	14,000	14,000.00
	eo1=M/N	cm	132.29	157.76
	eo2=1/30.ht,> 2 cm	cm	5.00	5.00
	used eo2	cm	2.00	2.00
	eo=eo1+eo2	cm	134.29	159.76
	eo/ht (see table)		0.90	1.07
	C		7.70	7.70
	lk	cm	455.50	455.50
	100.ht	cm	15,000	15,000.00
	lk/100.ht	cm	0.0304	0.03
	(lk/100.ht) ^ 2	cm	0.0009	0.00
	e1=C.[lk/(100.ht)] ^ 2.ht	cm	1.065	1.07
	e2=0.15.ht	cm	22.50	22.50
	e=eo+e1+e2	cm	157.85	183.32
	ea=e+1/2.ht–d'	cm	222.85	248.32
	M' = N.ea	kg.cm	10,742,498	11,970,098
	n.M'	kg.cm	225,592,457	251,372,067
	b.fs	kg/cm	140,000	140,000
Calculation for reinforcement bar with steel full working	n.M'/(b.fs)		1,611.37	1,795.51
	@sqrt(n.M'/(b.fs))		40.14	42.37
	Ca=h /@sqrt(n.M'/b.fs)		3.488	3.304
	n.fc		1,575	1,575
	eo = fs / (n.fc)		0.8889	0.8889
	delta		1.00	1.00
	from table fined Ca		2.930	3.167
	fine e > eo			2.125
	e'			3.091
	ksi(j)			0.320
	zeta			0.595
	100 nw			11.13
	nw			0.1113
	w			0.005
Calculation for reinforcement bar area	ea/h			1.77
	from table fined I			2.060
	I.A = wbh			74.20
	A	cm2		36.02
	A' =delta.I.A	cm2		36.02

A – used bar dia. 25 mm @ 12.5 cm,
Area @ bar = 4.909
nos of bar = 8
total area = 8 x 4.909
= 39.272 cm2
> 36.0194 cm2

A' – used bar dia. 25 mm @ 12.5 cm,
Area @ bar = 4.909
nos of bar = 8
total area = 8 x 4.909
= 39.272 cm
> 36.02 cm2

steel bar full warking

	n.e		44.63	
	fs		1,400.00	kg/cm2
compressive concrete	fc' = fs / (n.e)		31.37	kg/cm2
tensile bar	fs'' = fs / e'		452.93	kg/cm2
	fs' = 2 x fs''		905.86	kg/cm2
	7/8.b.h		12,250.00	cm2
shear concrete	Tca = S / (7/8.b.h)		0.0022	kg/cm2

bar

Item	Describtion	unit	Normal condition Case – II Section 6 Lwl	Earthquake condition Case – III Section 6 Hwl
	Allowance stresses			
concrete compressive	fc = K – 225	kg/cm2	75	75
steel tensile	fs	kg/cm2	1400	1400
concrete shear	tou without reinforcement	kg/cm2	8	8
	tou with reinforcement	kg/cm2	20	20
transformend	n = Es/Ec		21	21
Moment	M	t.m	43.484	59.958
		kg.cm	4,348,400	5,995,800
Shear	S	ton	42.785	53.935
		kg	42785	53935
dimension	b	cm	100	100
	ht	cm	150	150
	d'	cm	10	10
	h	cm	140	140
	b.h	cm2	14,000	14,000
	n.M	kg.cm	91,318,400	125,911,800
	b.fs	kg/cm	140,000	140,000
	n.M / (b.fs)		652.26	899.37
	@sqrt(n.M'/(b.fs))		25.54	29.99
Calculation for reinforcement bar with steel full working	Ca=h /@sqrt(n.M'/b.fs)		5.482	4.668
	n.fc		1,575	1,575
	eo = fs / (n.fc)		0.8889	0.8889
	delta		0.40	0.40
	from table fined Ca			4.662
	fine e > eo			2.845
	e'			4.625
	ksi(j)			0.260
	zeta			0.912
	100 nw			5.00
	nw			0.05
	w			0.002
reinforcement bar	A	cm2		33.33
	A' = A x delta	cm2		13.333

A – used bar dia. 25 mm @ 12.5 cm,
Area @ bar = 4.909
nos of bar = 8
total area = 8 x 4.909
= 39.272 cm2
> 33.33 cm2

A' – used bar dia. 22 mm @ 12.5 cm,
Area @ bar = 3.801
nos of bar = 8
total area = 8 x 3.801
= 30.408 cm
> 13.33 cm2

steel bar full warking

	n.e		59.77	
	fs		1,400	kg/cm2
compressive concrete	fc' = fs / (n.e)		23.42	kg/cm2
tensile bar	fs'' = fs / e'		302.70	kg/cm2
	fs' = 2 x fs''		605.41	kg/cm2
	7/8.b.h		12,250.00	cm2
shear concrete	Tca = S / (7/8.b.h)		0.0739	kg/cm2

bar

4.1.15 SUBSTRUCTURE (JL. SMA 12 Bridge)

(1) Basic Dimensions

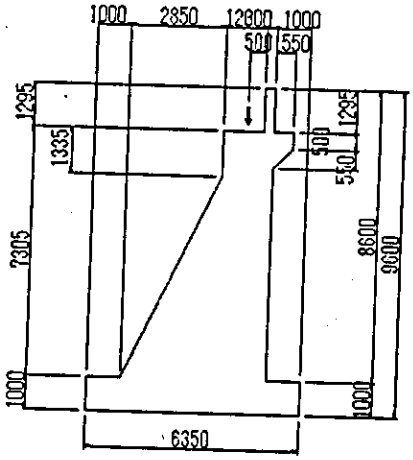

(1) Load from Superstructure

Dead Load

Beam length	16.6 m
Deck width	5.5 m
Deck slab thickness	0.245 m
No. of bemm	3 beams
Self weight of 1 pre-cast beem	0.643 t/m
No. of end diaphragm	4 nos.
Self weight of 1 diaphragm	0.099 t/pc.

- Self weight of deck slab — 16.6 x 5.5 x 0.245 x 2.5 = 55.921 t
- Self weight of pavement — 0.05 x 4.5 x 16.6 x 2.2 = 8.217 t
- Self weight of beam — 0.634 x 16.0 x 3 = 31.573 t
- Self weight of diaphragm — 0.099 x 2 = 0.198 t
- Self weight of hamdrail post — 2.4 x 2.5 = 6.000 t
- Self weight of hamdrail — 16.6 x 4 x 0.00879 = 0.583 t

Total dead load — Ms = 102.492 t

Live Load

- Line Load — $q = 0.8\ t/m^2 \times 4.5\ m \times 16.6\ m \times (1+0.4) = 83.664\ t$
- Knife load — 4.4 t/m x 4.5 m x (1+0.4) = 27.72 t

Total live load — 111.384 t

Horizontal Load

H = 0.1 x Ms = 10.249

(2) Stability Analysis

(a) Design Factors

Earthquake load	k=0.15	
Foundation (See Table 4.1.1)	SPT N value = 40	
	Internal Friction Angle	$\phi = 40$
	Bearing Capacity	qa1 = 65.6 tf/m^2
	Bearing Capacity	qa2 = 82.7 tf/m^2
Backfill Material	$\gamma t = 1.9$ t/m^3	
	$\phi = 30$ °	
	c = 0 t/m^2	

(b) Loading Combination and Safety Factor

The stability analysis of abutment are conducted under the following load combinations and safety conditions.

Case No.		Loading Combination	Increase in Allowable Stress	Safety Factor	
				Sliding	Bearing Capacity
1	Normal 1	Ms/2+Mw+Tn/2	0 %	1.5	2
2	Normal 2	Ms/2+Mw+Tn/2+La/2	0 %	1.5	2
3	Earthquake	Ms/2+Mw+He/2+Te/2+La/2+G	20 %	1.2	3

where, M : dead load
Tn : normal earth pressure
Te : earthquake earth pressure
La : live load
G : earthquake load (Ws x k)

(c) Safety of Weir

Sliding

The factor of safety against sliding is determined using the following formula:

$$SF = Rc / \Sigma H$$

where, H : total horizontal forces
Rc : resisting capacity
SF : safety factor given in the following
SF $\geq$ 1.5 (under normal condition)
SF $\geq$ 1.2 (under floods and earthquake condition)

Overturning

All forces acting on part of the structure above any horizontal plane should fall within the middle third of the structure base.

For this purpose, the following condition should be satisfied :
Normal condition
e = b/2-M/N < b/6
Earthquake condition
e = b/2-M/N < b/3
where,

b : width of base (m)
M : total moment about point A (tf . m)
N : total vertical forces (tf)
e : eccentricity (m)

Bearing Capacity of Pile Foundation

The maximum principal stress in the spread foundation must be kept within allowable soil bearing capacity which is derived from the following :

$Qa = Qu/SF$

where,

Qa : allowable soil bearing capacity
Qu : ultimate soil bearing capacity
$Qu_1 = 65.6$ tf/m^2 for long term load,
$Qu_2 = 82.7$ tf/m^2 for short term load.
SF $\geq$ 1.2

The allowable soil bearing capacity for the diversion weirs are;

$Qa_1 = 65.6$ tf/m^2 / 3 = 21 tf/m^2 for nomal condition,
$Qa_2 = 82.7$ tf/m^2 / 2 = 41 tf/m^2 for earthquake condition.

(d) Results of Analysis

The results of stability analysis is presented in Table 4.1.2 and summarized in the table below:

		SF	e	B/6 or B/3	qmax
1	Normal 1	2.48	0.29	1.06	17.52
2	Normal 2	2.19	0.51	1.06	18.00
3	Earthquake	1.25	1.52	2.12	27.62

Table 4.1.1 Foundation Condition of Diversion Weirs

N value	c					fai	Eo	α	β	C	γ1	γ2	Nc	Nr	Nq	Df'	B'	q_{a1}	q_{a2}
	soft clay		hard clay		sand														
	(tf/m2)	(tf/m2)	(tf/m2)	(tf/m2)	(tf/m3)														
5	0.6	0.5	3.0	5.0	0.0	24.0	140.0	0.1	0.5	0.0	1.9	1.8	5.1	0.0	3.5	2.5	1.0	5.3	5.3
10	1.3	0.9	6.0	10.0	0.0	27.0	280.0	0.1	0.5	0.0	1.9	1.8	5.1	0.0	4.2	2.5	1.0	6.3	6.3
15	1.9	1.4	9.0	15.0	0.0	30.0	420.0	0.1	0.5	0.0	1.9	1.8	1.2	1.2	5.0	2.5	1.0	7.9	8.3
20	2.5	1.8	12.0	20.0	0.0	32.0	560.0	0.1	0.5	0.0	1.9	1.8	8.0	2.0	6.0	2.5	1.0	9.6	10.3
25	3.1	2.3	15.0	25.0	0.0	34.0	700.0	0.1	0.5	0.0	1.9	1.8	11.0	3.4	8.0	2.5	1.0	13.1	14.2
30	3.8	2.7	18.0	30.0	0.0	36.0	840.0	0.1	0.5	0.0	1.7	1.6	13.4	6.2	14.5	2.5	1.0	21.4	23.2
35	4.4	3.2	21.0	35.0	0.0	38.0	980.0	0.1	0.5	0.0	1.9	1.8	38.0	26.0	30.0	2.5	1.0	53.2	61.5
40	5.0	3.6	24.0	40.0	0.0	39.0	1,120.0	0.1	0.5	0.0	0.9	0.7	95.7	114.0	83.2	2.5	1.0	65.6	82.7
45	5.6	4.1	27.0	45.0	0.0	41.0	1,260.0	0.1	0.5	0.0	1.9	1.8	93.0	110.0	81.0	2.5	1.0	156.3	191.2
50	6.3	4.5	30.0	50.0	0.0	42.0	1,400.0	0.1	0.5	0.0	1.9	1.8	93.0	110.0	81.0	2.5	1.0	156.3	191.2

TABLE 4.1.2 (1/4) RESULT OF STABILITY ANALYSIS

(1) IPUT DATA

Title	MEDAN FLOOD, JL. SMA 12 BRIDGE (F7)			
Basic Data	Unit Weight of Reinforcement Concrete		2.50	(tf/m^3)
	Unit Weight of Plain Concrete		2.35	(tf/m^3)
	Backfill Siol	Wet	1.90	(tf/m^3)
		Submarged	1.00	(tf/m^3)
		Internal friction angle	40.0	degree
	Active Load	Normal	1.00	tf/m^2
		Earthquake	0.00	tf/m^2
	Horizontal earthquake factor		0.15	
Reaction of	Dead load		51.246	tf
Superstructure	Live Load		55.692	tf
	Hrizontal load		5.125	tf
Basic Dimensions	Width of Abutment		5.50	m
	Base width		5.50	m

TABLE 4.1.2 (2/4) RESULT OF STABILITY ANALYSIS

(2) Result of Load Calculation

Self Weght

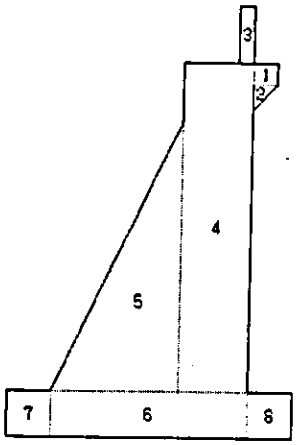

No	Width (m)	Height (m)	Length (m)	Unit weght (tf/m³)	V (tf)	Shape
1	0.550	0.500	5.500	2.50	3.78	□
2	0.550	0.550	5.500	2.50	2.08	◹
3	0.300	1.295	5.500	2.50	5.34	□
4	1.500	7.305	5.500	2.35	141.63	□
5	2.850	5.970	5.500	2.35	109.96	◿
6	4.350	1.000	5.500	2.35	56.22	□
7	1.000	1.000	5.500	2.35	12.93	□
8	1.000	1.000	5.500	2.35	12.93	□

No	V (tf)	x (m)	V x (tf·m)	H (tf)	y (m)	H y (tf·m)
1	3.78	5.625	21.27	0.57	8.055	4.57
2	2.08	5.533	11.51	0.31	7.622	2.38
3	5.34	5.200	27.78	0.80	8.952	7.17
4	141.63	4.600	651.48	21.24	4.653	98.84
5	109.96	2.900	318.87	16.49	2.990	49.32
6	56.22	3.175	178.51	8.43	0.500	4.22
7	12.93	0.500	6.46	1.94	0.500	0.97
8	12.93	5.850	75.61	1.94	0.500	0.97
Σ	344.86		1291.49	51.73		168.43

TABLE 4.1.2 (3/4)　　RESULT OF STABILITY ANALYSIS

Earth Pressure (Normal Condition)

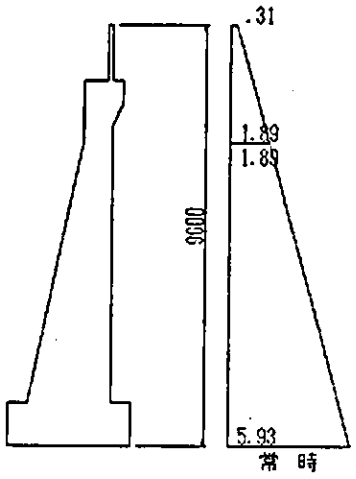

常時

土圧係数（ﾊﾟﾗﾍﾟｯﾄ部）　0.3085
土圧係数（く体部）　0.3085

	V (tf)	x (m)	V x (tf･m)	H (tf)	y (m)	H y (tf･m)
土圧1	2.04	5.350	10.92	11.57	7.800	90.25
土圧2	23.75	5.350	127.08	134.71	2.805	377.84
載荷重1	0.80	5.350	4.26	4.51	8.250	37.22
載荷重2	2.03	5.350	10.88	11.53	3.450	39.77
合　計	28.62		153.12	162.32		545.09

Earth Pressure (Earthquake Condition)

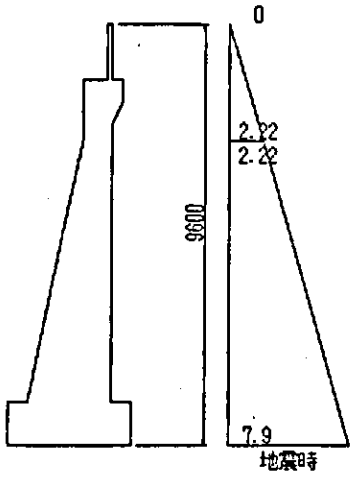

地震時

土圧係数（ﾊﾟﾗﾍﾟｯﾄ部）　0.4329
土圧係数（く体部）　0.4329

	V (tf)	x (m)	V x (tf･m)	H (tf)	y (m)	H y (tf･m)
土圧1	0.00	5.350	0.00	16.49	7.800	128.63
土圧2	0.00	5.350	0.00	191.98	2.805	538.49
合　計	0.00		0.00	208.48		667.12

TABLE 4.1.2 (4/4) RESULT OF STABILITY ANALYSIS

Results of Stability Analysis for Abutment of JL. SMA 12 Bridge

Case 1

	V (tf)	Vx (tf.m)	H (tf)	Hy (tf.m)
Reaction from Superstructure	106.94	486.57	0.00	0.00
Self-weight	344.86	1291.49	0.00	0.00
Earth Pressure (1)	2.84	15.17	16.08	127.47
Earth Pressure (2)	25.79	137.95	146.24	417.62
Total	480.43	1931.18	162.32	545.09

B =	6.35 m	
e =	0.29 m	
M = e.V	139.28 t.m	
B/6=	1.06 m	
SF =	2.48 > 1.5	
Qmax =	17.52 tf/m^2	> 21 t/m^2
Qmin =	9.99 tf/m^2	> 21 t/m^2

Case 2

	V (tf)	Vx (tf.m)	H (tf)	Hy (tf.m)
Reaction from Superstructure	51.25	233.17	0.00	0.00
Self-weight	344.86	1291.49	0.00	0.00
Earth Pressure (1)	2.84	15.17	16.08	127.47
Earth Pressure (2)	25.79	137.95	146.24	417.62
Total	424.74	1677.78	162.32	545.09

B =	6.35 m	
e =	0.51 m	
M = e.V	215.86 t.m	
B/6=	1.06 m	
SF =	2.19 > 1.5	
Qmax =	18.00 tf/m^2	> 21 t/m^2
Qmin =	6.32 tf/m^2	> 21 t/m^2

Case 3

	V (tf)	Vx (tf.m)	H (tf)	Hy (tf.m)
Reaction from Superstructure	51.25	233.17	5.13	43.08
Self-weight	344.86	1291.49	51.73	168.43
Earth Pressure (1)	0.00	0.00	16.49	128.63
Earth Pressure (2)	0.00	0.00	191.98	528.49
Total	396.11	1524.66	265.33	868.63

B =	6.35 m	
e =	1.52 m	
M = e.V	601.62 t.m	
B/3=	2.12 m	
SF =	1.25 > 1.2	
Qmax =	27.62 tf/m^2	> 41 t/m^2
Qmin =	-4.93 tf/m^2	> 41 t/m^2