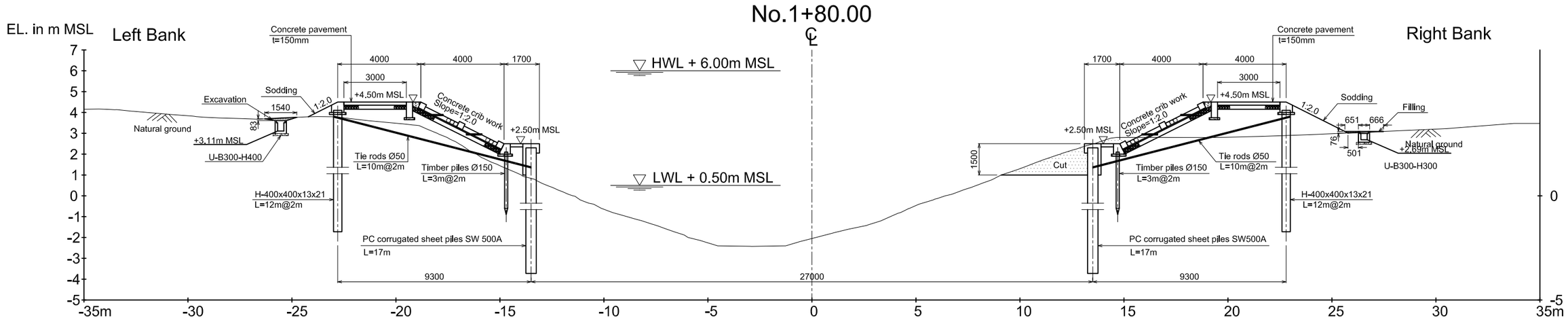

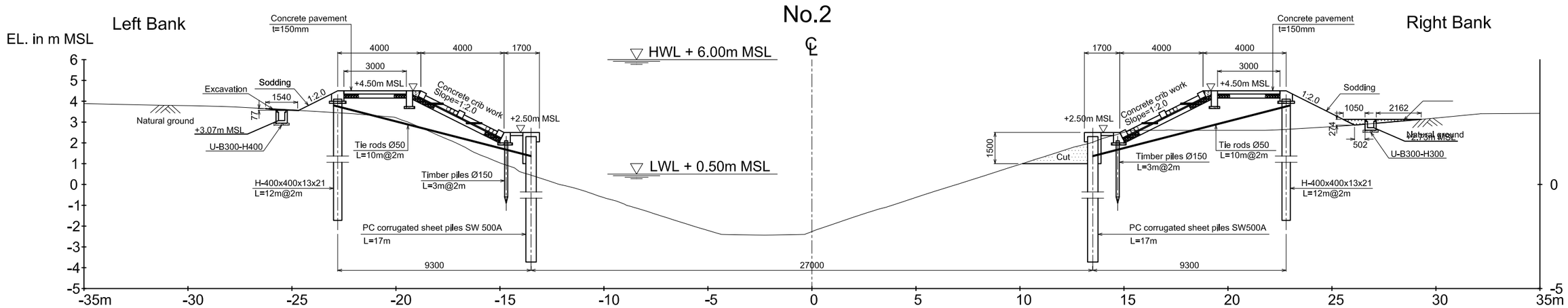

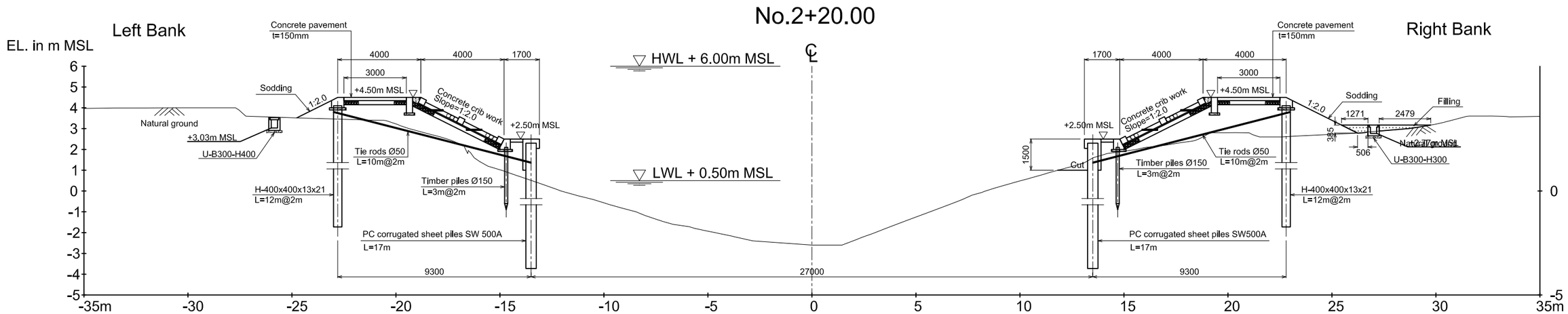

REV. NO.	DESCRIPTION	CONSULTANT CHECKED	CONSULTANT DATE	RID CHECKED	RID DATE	REV. NO.	APPROVED BY

KINGDOM OF THAILAND
MINISTRY OF AGRICULTURE AND COOPERATIVES
ROYAL IRRIGATION DEPARTMENT

SHEET CONTENTS: (CIVIL WORKS) BANK PROTECTION OF HAN TRA CANAL CROSS SECTIONS (4/6) NO.1+80.00 TO NO.2+20.00

OWNER: Royal Irrigation Department, Ministry of Agriculture and Cooperatives

PROJECT TITLE: Preparatory Survey on the Flood Prevention Project of East Side of the Pasak River in Ayutthaya in the Kingdom of Thailand

CTI ENGINEERING INTERNATIONAL CO., LTD.
ORIENTAL CONSULTANTS CO., LTD.
NIPPON KOEI CO., LTD.
CTI ENGINEERING CO., LTD.

DESIGNED BY	CHECKED BY	DATE :	SCALE :
ISHII Masaki	MISHINA Takahiro	JULY 2012	
STRUCTURAL ENGINEER	TEAM LEADER	DWG. NO. HT-BP-008	SHEET NO.

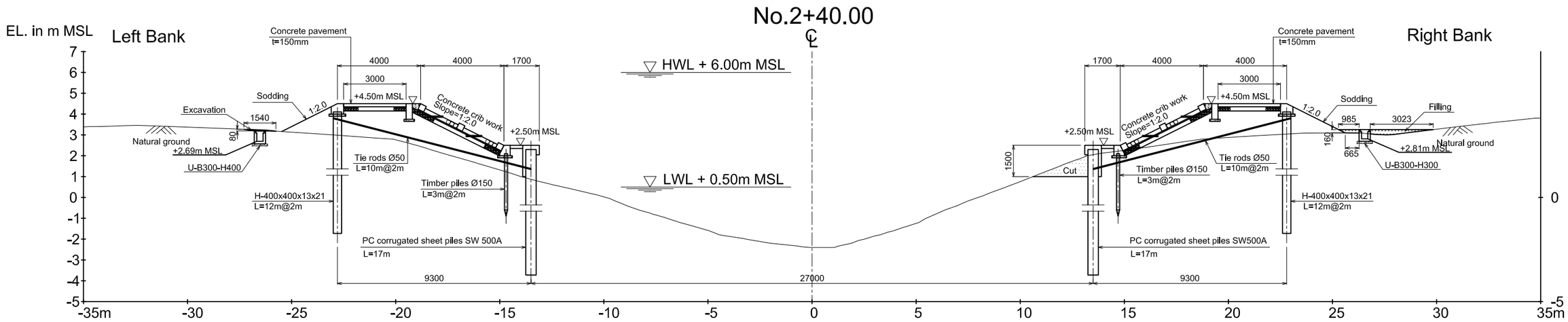

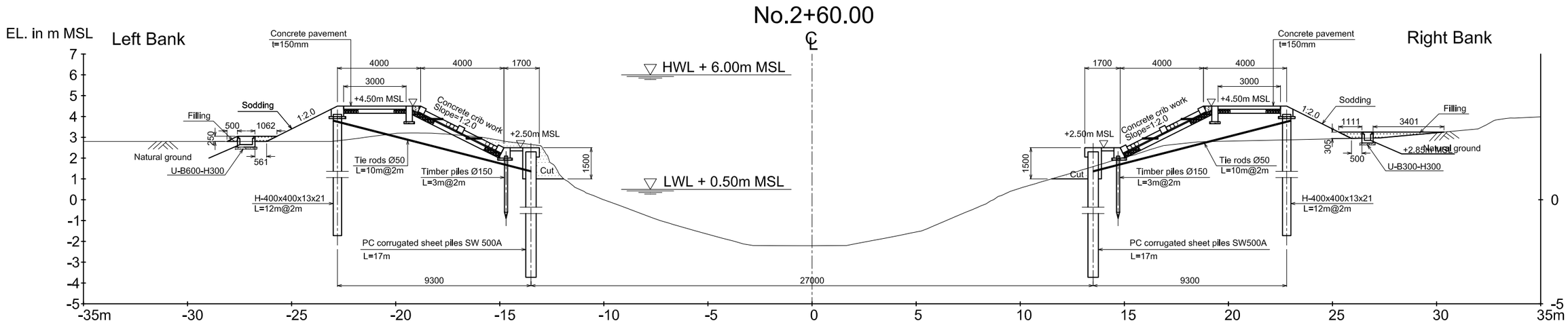

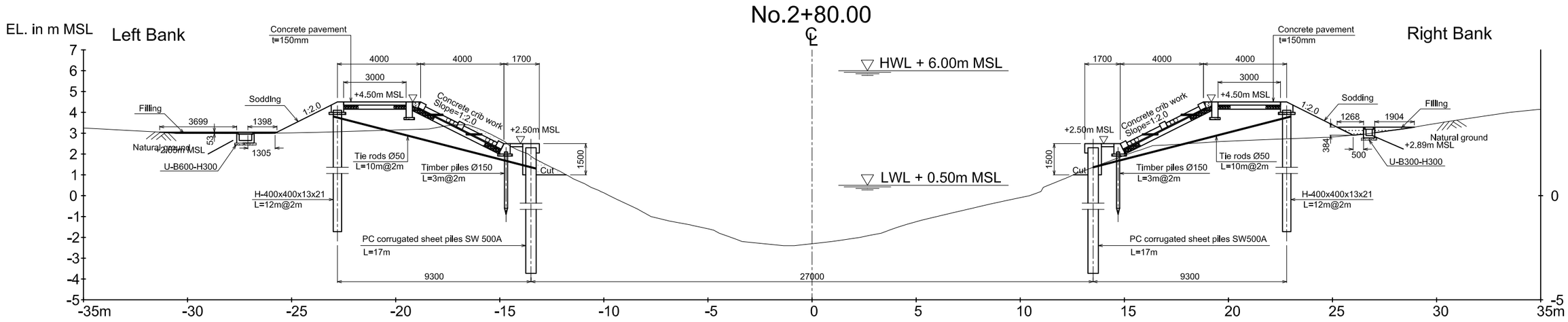

REV. NO.	DESCRIPTION	CONSULTANT CHECKED	CONSULTANT DATE	RID CHECKED	RID DATE	REV. NO.	APPROVED BY

KINGDOM OF THAILAND
MINISTRY OF AGRICULTURE AND COOPERATIVES
ROYAL IRRIGATION DEPARTMENT

SHEET CONTENTS: (CIVIL WORKS) BANK PROTECTION OF HAN TRA CANAL CROSS SECTIONS (5/6) NO.2+40.00 TO NO.2+80.00

OWNER: Royal Irrigation Department, Ministry of Agriculture and Cooperatives

PROJECT TITLE: Preparatory Survey on the Flood Prevention Project of East Side of the Pasak River in Ayutthaya in the Kingdom of Thailand

CTI ENGINEERING INTERNATIONAL CO., LTD.
ORIENTAL CONSULTANTS CO., LTD.
NIPPON KOEI CO., LTD.
CTI ENGINEERING CO., LTD.

DESIGNED BY	CHECKED BY	DATE :	SCALE :
ISHII Masaki	MISHINA Takahiro	JULY 2012	
STRUCTURAL ENGINEER	TEAM LEADER	DWG. NO. HT-BP-009	SHEET NO.

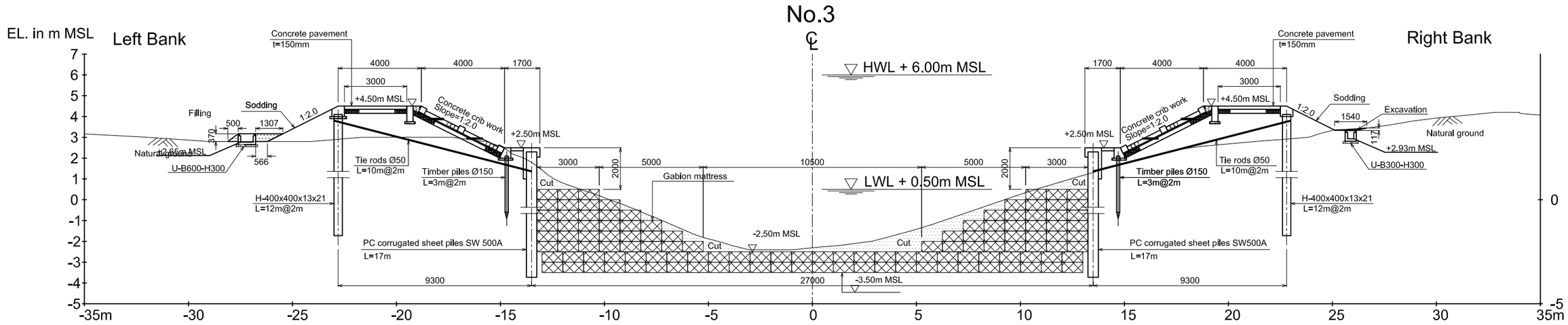

資料9-23

REV. NO.	DESCRIPTION	CONSULTANT CHECKED	CONSULTANT DATE	RID CHECKED	RID DATE	REV. NO.	APPROVED BY

KINGDOM OF THAILAND
MINISTRY OF AGRICULTURE AND COOPERATIVES
ROYAL IRRIGATION DEPARTMENT

SHEET CONTENTS: (CIVIL WORKS) BANK PROTECTION OF HAN TRA CANAL CROSS SECTIONS (6/6) NO.3

OWNER: Royal Irrigation Department, Ministry of Agriculture and Cooperatives

PROJECT TITLE: Preparatory Survey on the Flood Prevention Project of East Side of the Pasak River in Ayutthaya in the Kingdom of Thailand

CTI ENGINEERING INTERNATIONAL CO., LTD.
ORIENTAL CONSULTANTS CO., LTD.
NIPPON KOEI CO., LTD.
CTI ENGINEERING CO., LTD.

DESIGNED BY: ISHII Masaki (STRUCTURAL ENGINEER)
CHECKED BY: MISHINA Takahiro (TEAM LEADER)
DATE : JULY 2012
DWG. NO. HT-BP-010
SCALE :
SHEET NO.

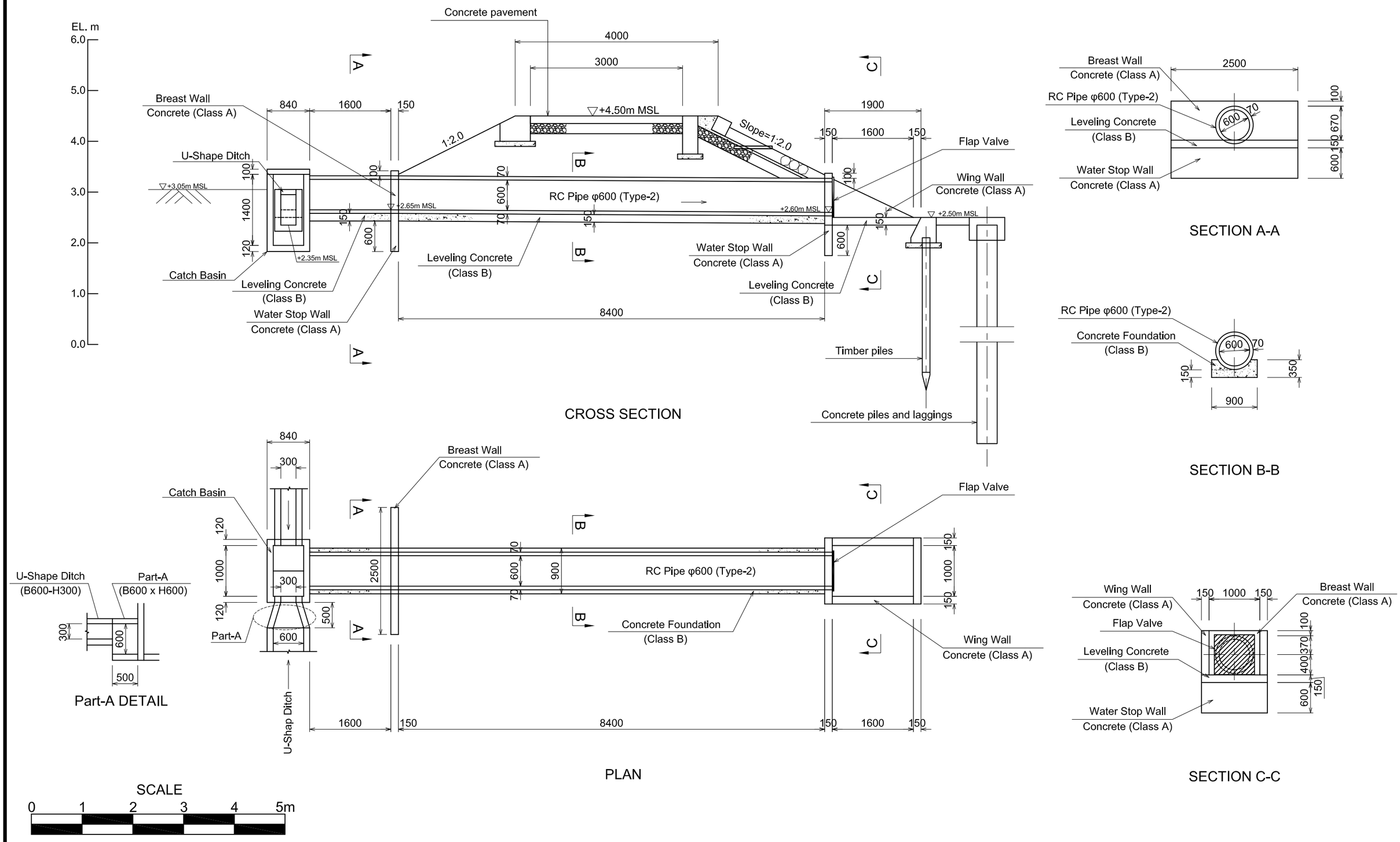

REV. NO.	DESCRIPTION	CONSULTANT CHECKED	CONSULTANT DATE	RID CHECKED	RID DATE	REV. NO.	APPROVED BY

KINGDOM OF THAILAND
MINISTRY OF AGRICULTURE AND COOPERATIVES
ROYAL IRRIGATION DEPARTMENT

SHEET CONTENTS: (CIVIL WORKS) BANK PROTECTION OF HAN TRA CANAL SLUICEWAY

OWNER: Royal Irrigation Department, Ministry of Agriculture and Cooperatives

PROJECT TITLE: Preparatory Survey on the Flood Prevention Project of East Side of the Pasak River in Ayutthaya in the Kingdom of Thailand

CTI ENGINEERING INTERNATIONAL CO., LTD.
ORIENTAL CONSULTANTS CO., LTD.
NIPPON KOEI CO., LTD.
CTI ENGINEERING CO., LTD.

DESIGNED BY	CHECKED BY	DATE :	SCALE :
KAJIURA Takeki	MISHINA Takahiro	JULY 2012	
STRUCTURAL ENGINEER	TEAM LEADER	DWG. NO. HT-BP-011	SHEET NO.

INLET (S=1/15)

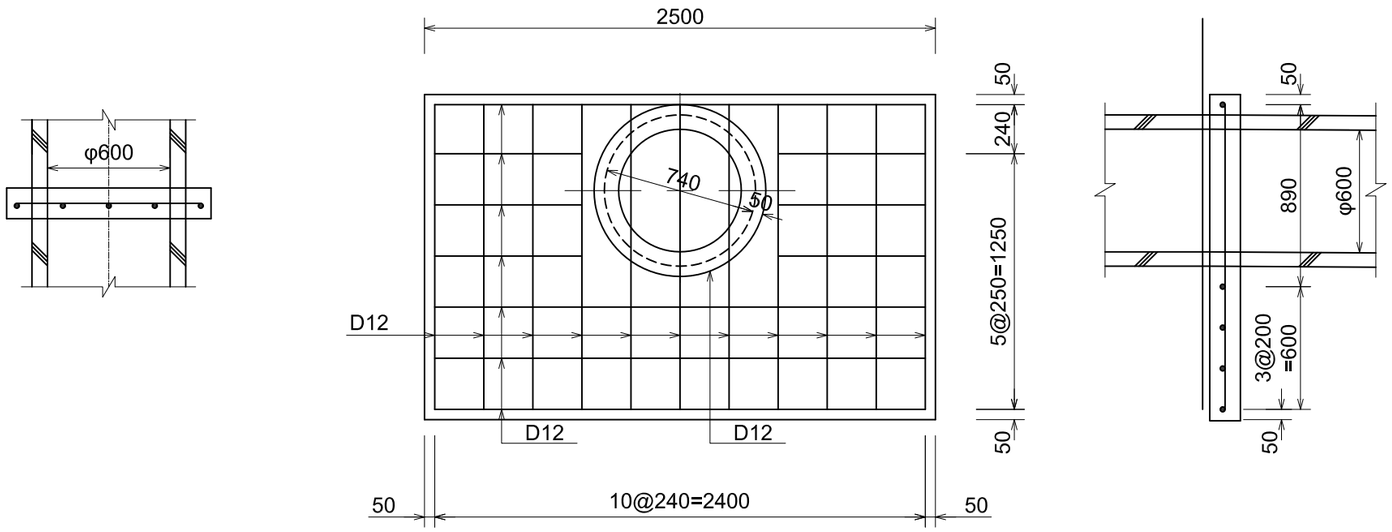

OUTLET (S=1/15)

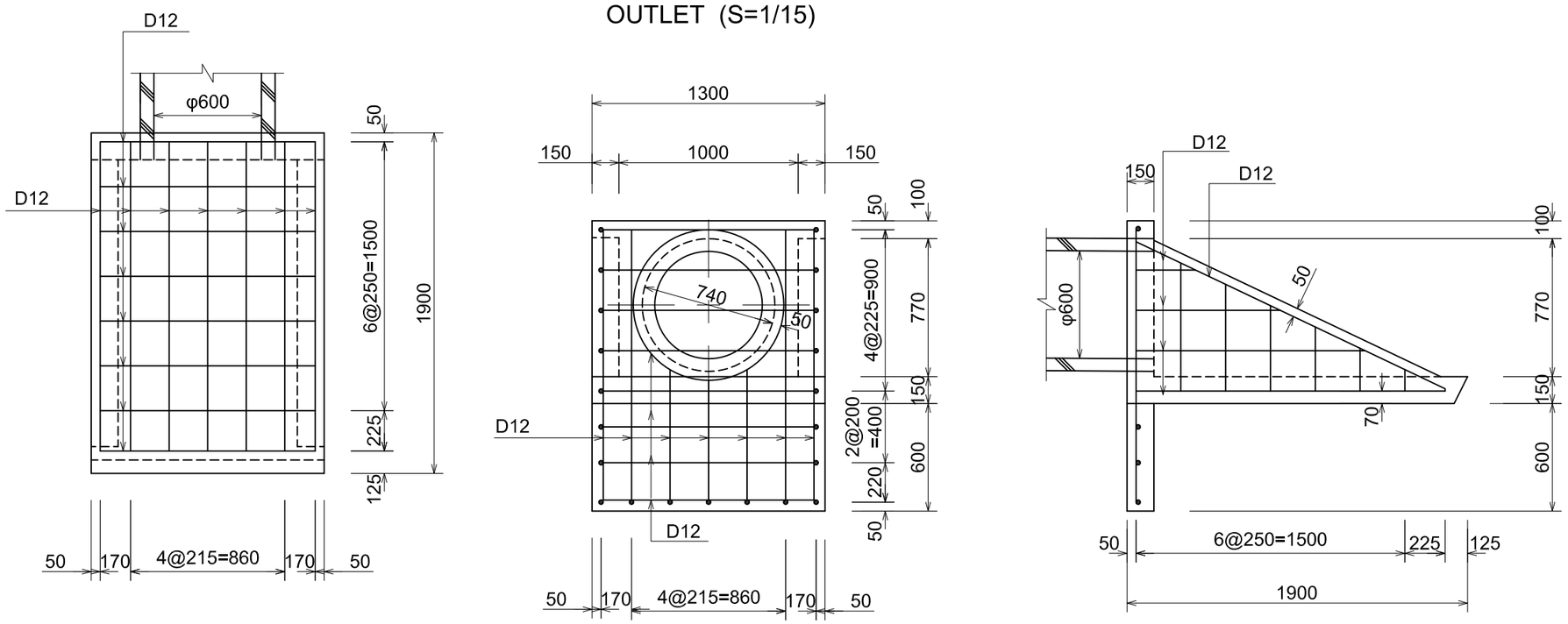

FLAP VALVE (S=1/15)

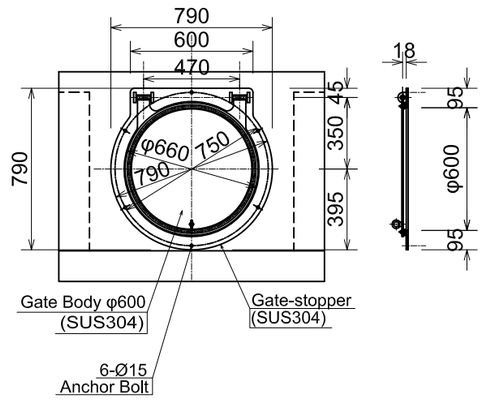

REV. NO.	DESCRIPTION	CONSULTANT CHECKED	CONSULTANT DATE	RID CHECKED	RID DATE	REV. NO.	APPROVED BY

KINGDOM OF THAILAND
MINISTRY OF AGRICULTURE AND COOPERATIVES
ROYAL IRRIGATION DEPARTMENT

SHEET CONTENTS: (CIVIL WORKS) BANK PROTECTION OF HAN TRA CANAL SLUICEWAY

OWNER: Royal Irrigation Department, Ministry of Agriculture and Cooperatives

PROJECT TITLE: Preparatory Survey on the Flood Prevention Project of East Side of the Pasak River in Ayutthaya in the Kingdom of Thailand

CTI ENGINEERING INTERNATIONAL CO., LTD.
ORIENTAL CONSULTANTS CO., LTD.
NIPPON KOEI CO., LTD.
CTI ENGINEERING CO., LTD.

DESIGNED BY: ISHII Masaki (STRUCTURAL ENGINEER)
CHECKED BY: MISHINA Takahiro (TEAM LEADER)
DATE: JULY 2012
DWG. NO. HT-BP-012
SCALE:
SHEET NO.

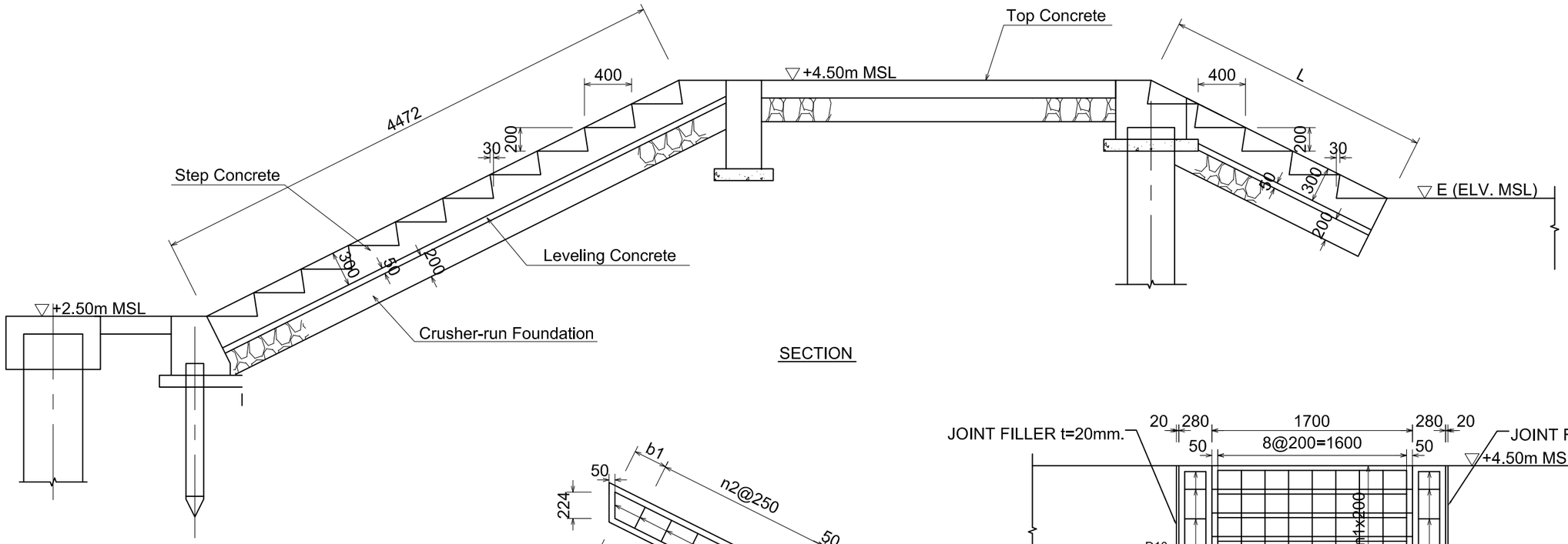

SECTION

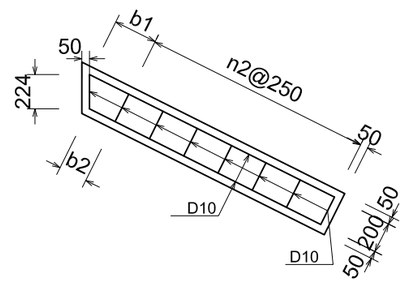

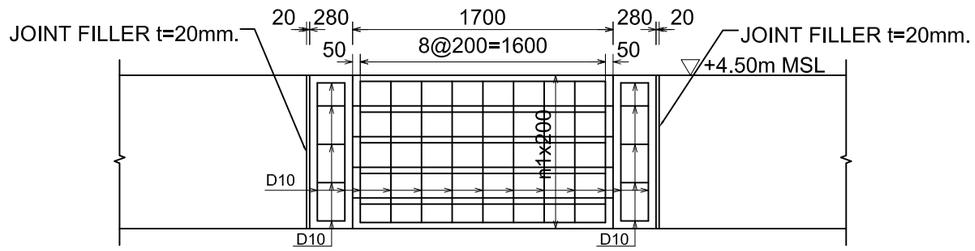

ELEVATION VIEW OF EXTERIOR STAIRS

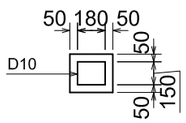

Stairs No.	n1 (-)	n2 (-)	b1 (mm)	b2 (mm)
R1	5	6	151	51
R2	8	11	160	60
R3	6	8	147	47
R4	8	11	135	35
R5	8	10	356	256
R6	9	11	265	165
R7	9	11	348	248
L1	3	3	363	263
L2	4	5	187	87
L3	5	6	231	131
L4	8	10	380	280

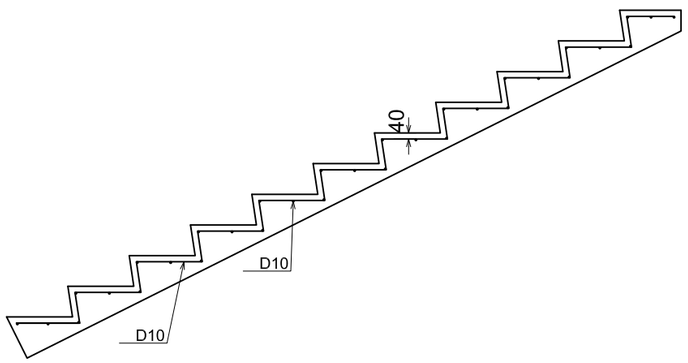

REINFORCEMENT ARRANGEMENT

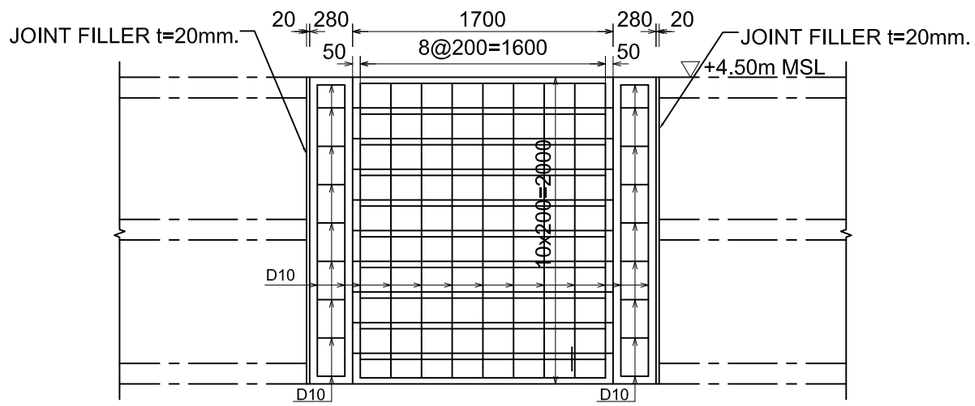

ELEVATION VIEW OF RIVER SIDE STAIRS

REV. NO.	DESCRIPTION	CONSULTANT CHECKED	CONSULTANT DATE	RID CHECKED	RID DATE	REV. NO.	APPROVED BY

KINGDOM OF THAILAND
MINISTRY OF AGRICULTURE AND COOPERATIVES
ROYAL IRRIGATION DEPARTMENT

SHEET CONTENTS: (CIVIL WORKS) BANK PROTECTION OF HAN TRA CANAL STAIRS AT REVETMENT

OWNER: Royal Irrigation Department, Ministry of Agriculture and Cooperatives

PROJECT TITLE: Preparatory Survey on the Flood Prevention Project of East Side of the Pasak River in Ayutthaya in the Kingdom of Thailand

CTI ENGINEERING INTERNATIONAL CO., LTD.
ORIENTAL CONSULTANTS CO., LTD.
NIPPON KOEI CO., LTD.
CTI ENGINEERING CO., LTD.

DESIGNED BY: ISHII Masaki (STRUCTURAL ENGINEER)
CHECKED BY: MISHINA Takahiro (TEAM LEADER)
DATE: JULY 2012
DWG. NO. HT-BP-013
SCALE: 1:40
SHEET NO.

REV. NO.	DESCRIPTION	CONSULTANT CHECKED	CONSULTANT DATE	RID CHECKED	RID DATE	REV. NO.	APPROVED BY

KINGDOM OF THAILAND
MINISTRY OF AGRICULTURE AND COOPERATIVES
ROYAL IRRIGATION DEPARTMENT

SHEET CONTENTS: (CIVIL WORKS) KRA MANG FLOODGATE LAYOUT 1

OWNER: Royal Irrigation Department, Ministry of Agriculture and Cooperatives

PROJECT TITLE: Preparatory Survey on the Flood Prevention Project of East Side of the Pasak River in Ayutthaya in the Kingdom of Thailand

CTI ENGINEERING INTERNATIONAL CO., LTD.
ORIENTAL CONSULTANTS CO., LTD.
NIPPON KOEI CO., LTD.
CTI ENGINEERING CO., LTD.

DESIGNED BY: ISHII Masaki (STRUCTURAL ENGINEER)
CHECKED BY: MISHINA Takahiro (TEAM LEADER)
DATE : AUGUST 2012
DWG. NO. KM-FG-001
SCALE :
SHEET NO.

資料9-27

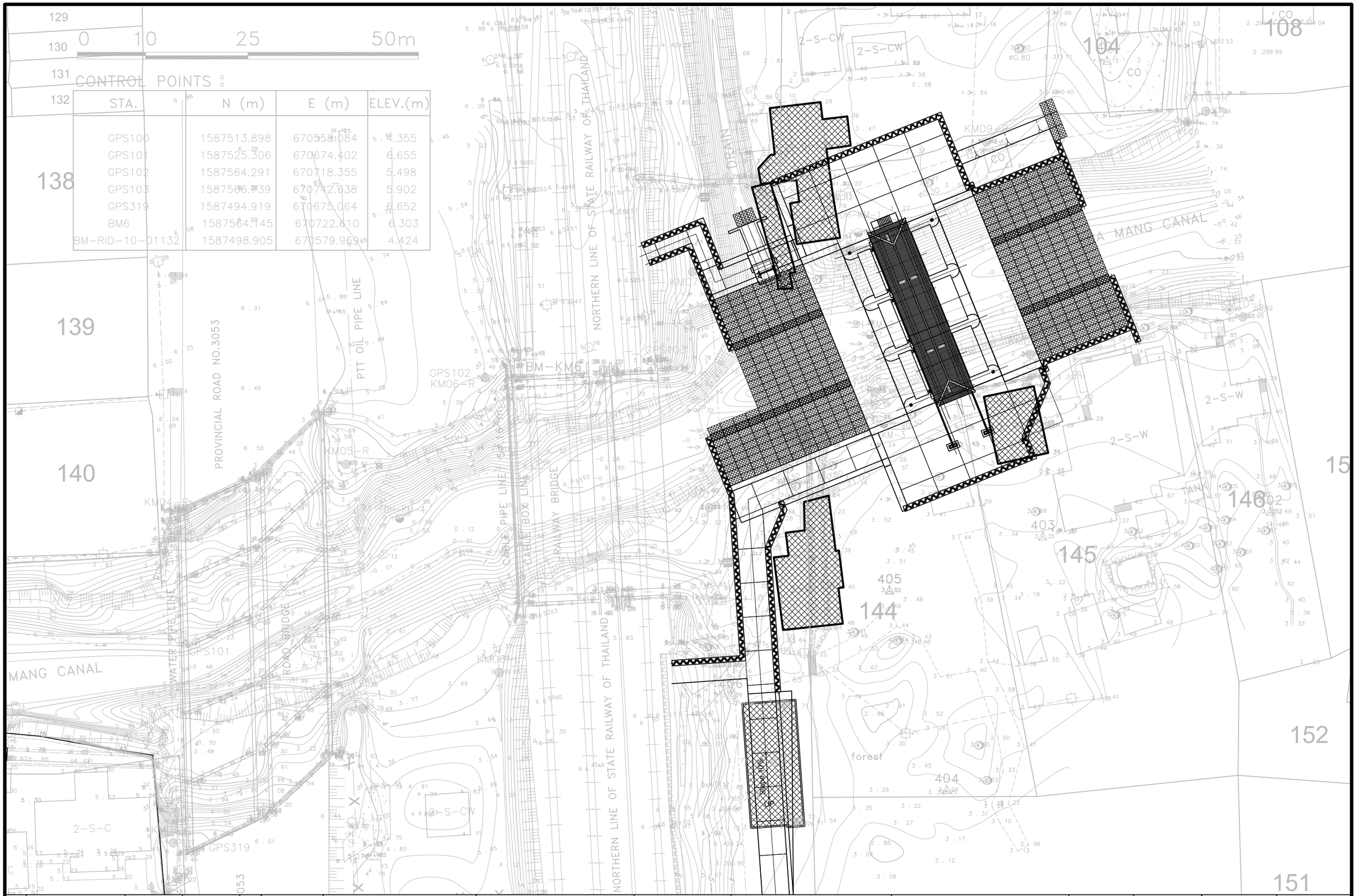

REV. NO.	DESCRIPTION	CONSULTANT CHECKED	CONSULTANT DATE	RID CHECKED	RID DATE	REV. NO.	APPROVED BY

KINGDOM OF THAILAND
MINISTRY OF AGRICULTURE AND COOPERATIVES
ROYAL IRRIGATION DEPARTMENT

SHEET CONTENTS: (CIVIL WORKS) KRA MANG FLOODGATE LAYOUT 2

OWNER: Royal Irrigation Department, Ministry of Agriculture and Cooperatives

PROJECT TITLE: Preparatory Survey on the Flood Prevention Project of East Side of the Pasak River in Ayutthaya in the Kingdom of Thailand

CTI ENGINEERING INTERNATIONAL CO., LTD.
ORIENTAL CONSULTANTS CO., LTD.
NIPPON KOEI CO., LTD.
CTI ENGINEERING CO., LTD.

DESIGNED BY: ISHII Masaki, STRUCTURAL ENGINEER
CHECKED BY: MISHINA Takahiro, TEAM LEADER
DATE: AUGUST 2012
DWG. NO. KM-FG-002
SCALE:
SHEET NO.

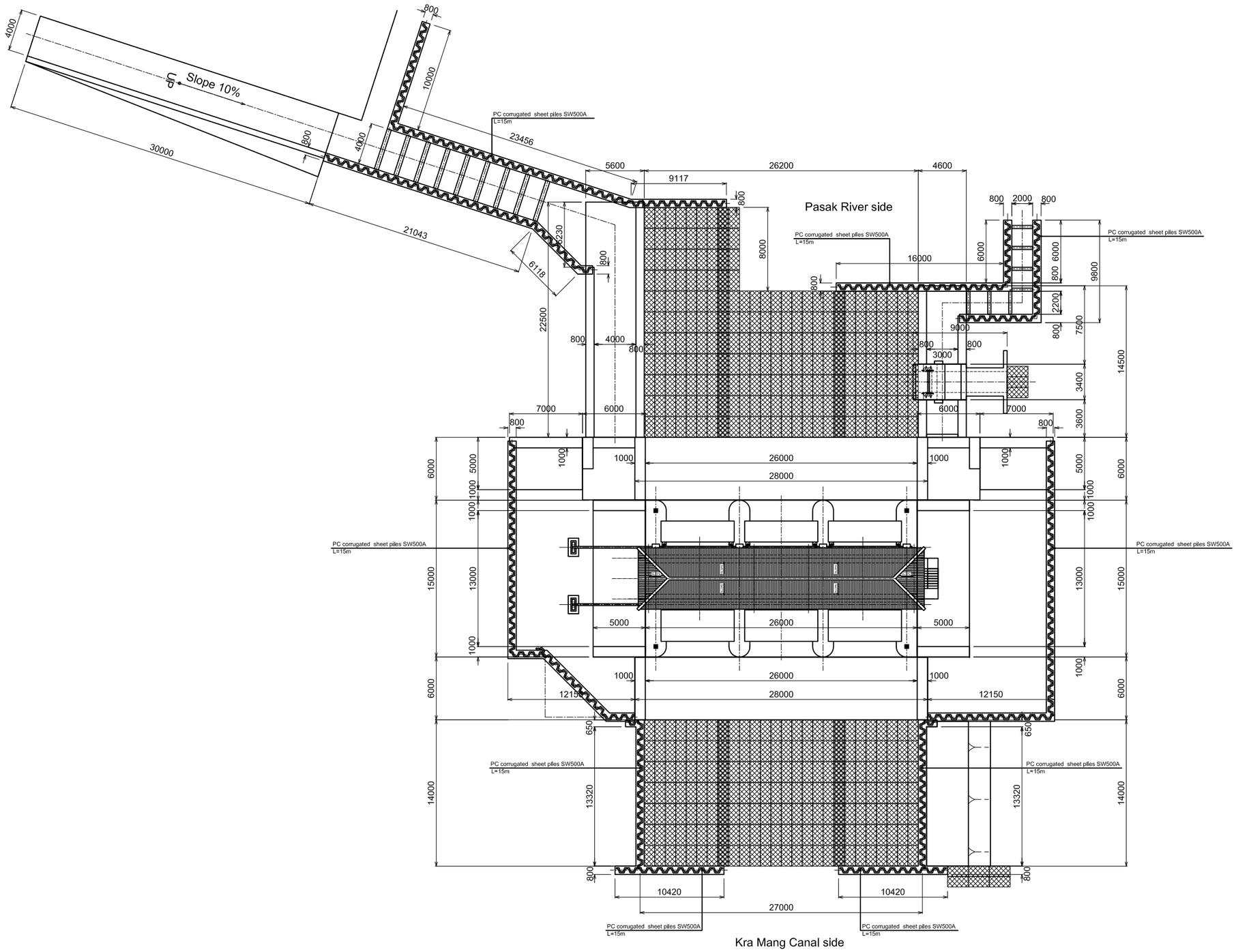

PLAN OF KRA MANG FLOOD GATE

REV. NO.	DESCRIPTION	CONSULTANT CHECKED	CONSULTANT DATE	RID CHECKED	RID DATE	REV. NO.	APPROVED BY

KINGDOM OF THAILAND
MINISTRY OF AGRICULTURE AND COOPERATIVES
ROYAL IRRIGATION DEPARTMENT

SHEET CONTENTS: (CIVIL WORKS) KRA MANG FLOODGATE PLAN

OWNER: Royal Irrigation Department, Ministry of Agriculture and Cooperatives

PROJECT TITLE: Preparatory Survey on the Flood Prevention Project of East Side of the Pasak River in Ayutthaya in the Kingdom of Thailand

CTI ENGINEERING INTERNATIONAL CO., LTD.
ORIENTAL CONSULTANTS CO., LTD.
NIPPON KOEI CO., LTD.
CTI ENGINEERING CO., LTD.

DESIGNED BY	CHECKED BY	DATE :	SCALE :
ISHII Masaki	MISHINA Takahiro	AUGUST 2012	
STRUCTURAL ENGINEER	TEAM LEADER	DWG. NO. KM-FG-001	SHEET NO.

資料9-29

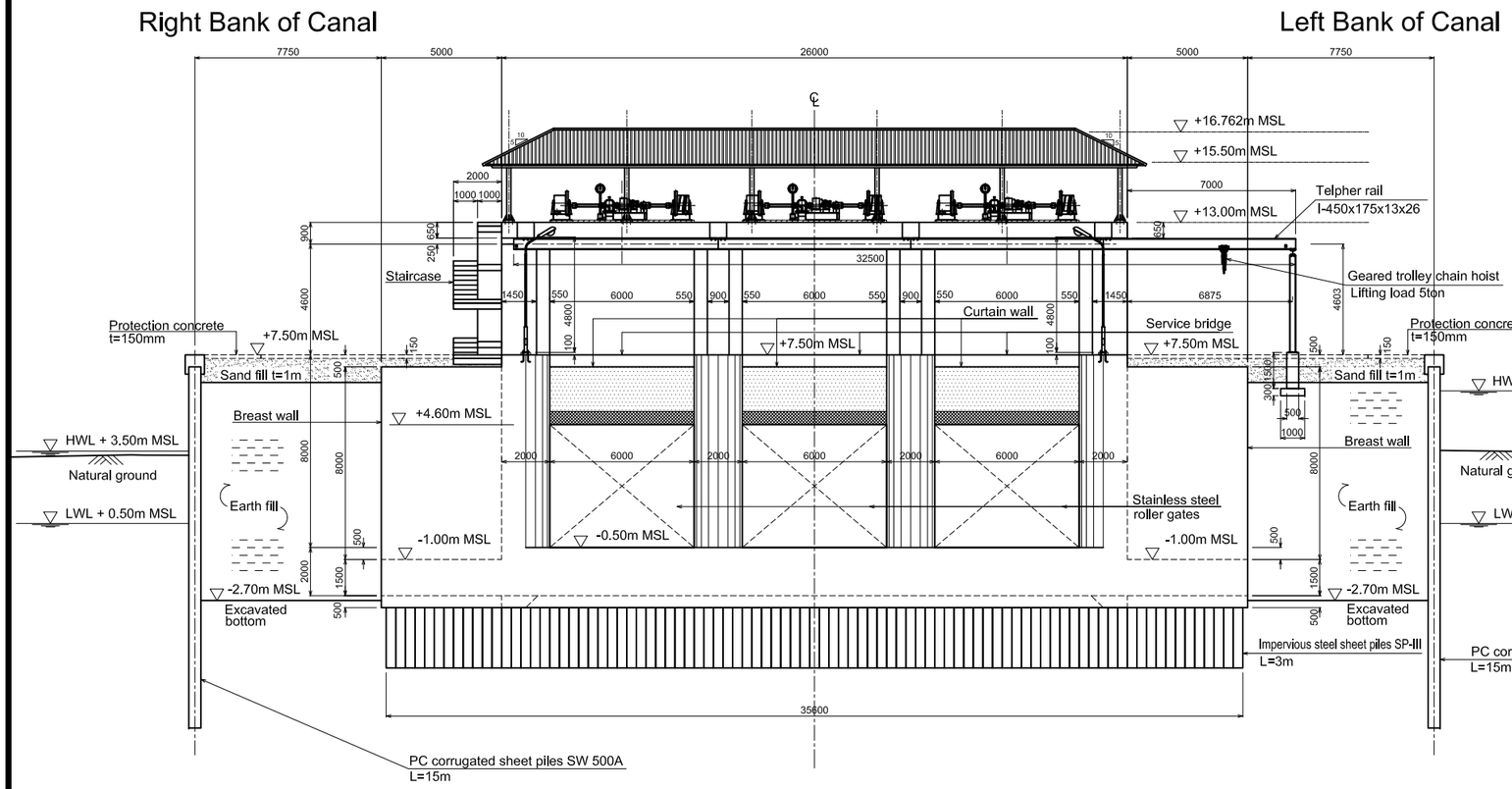

SECTION A-A

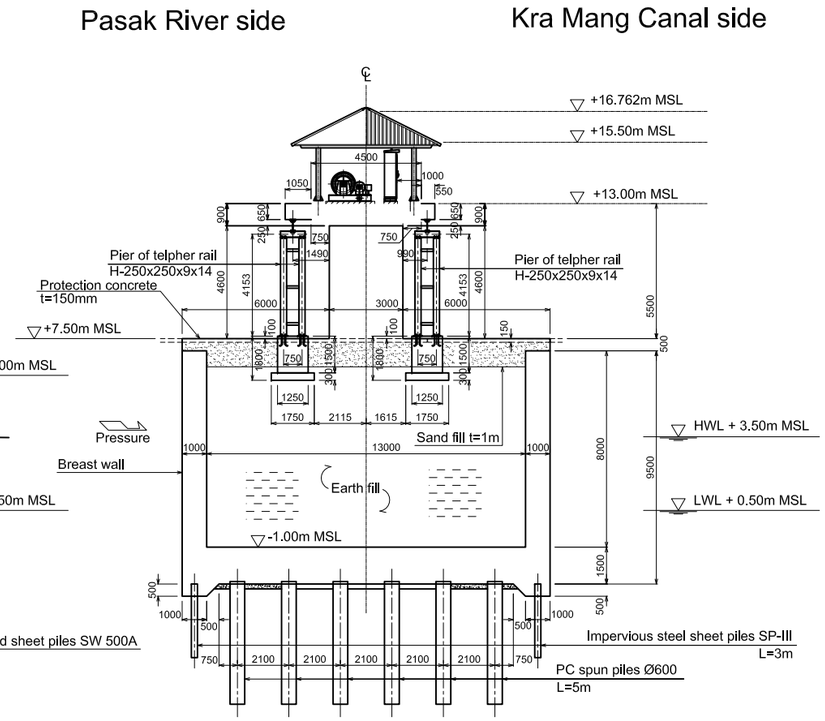

SECTION C-C

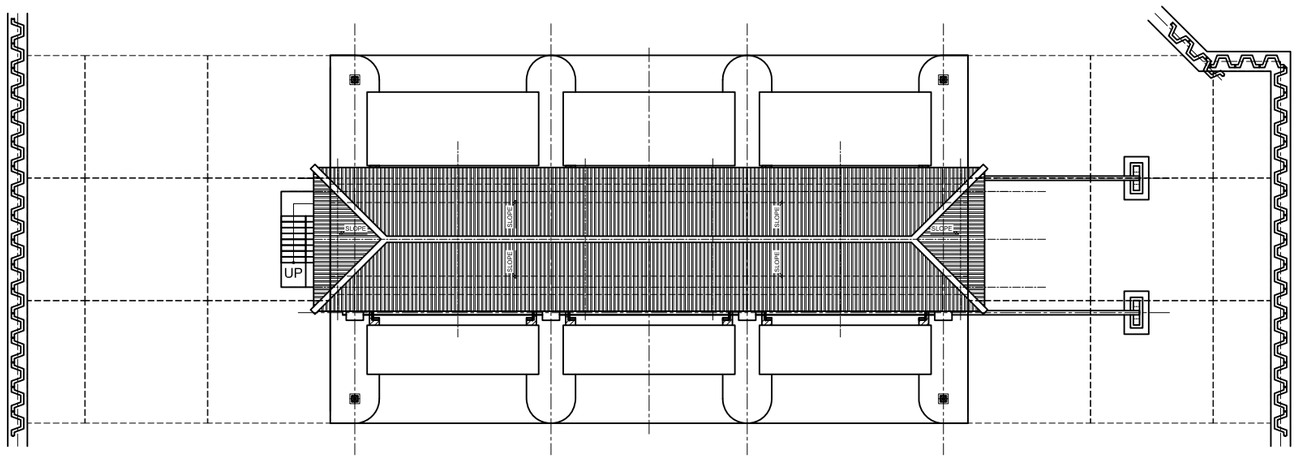

MAIN STRUCTURE OF KRA MANG FLOODGATE

REV. NO.	DESCRIPTION	CONSULTANT CHECKED	CONSULTANT DATE	RID CHECKED	RID DATE	REV. NO.	APPROVED BY

KINGDOM OF THAILAND
MINISTRY OF AGRICULTURE AND COOPERATIVES
ROYAL IRRIGATION DEPARTMENT

SHEET CONTENTS: (CIVIL WORKS) KRA MANG FLOODGATE MAIN STRUCTURE PLAN AND SECTIONS

OWNER: Royal Irrigation Department, Ministry of Agriculture and Cooperatives

PROJECT TITLE: Preparatory Survey on the Flood Prevention Project of East Side of the Pasak River in Ayutthaya in the Kingdom of Thailand

CTI ENGINEERING INTERNATIONAL CO., LTD.
ORIENTAL CONSULTANTS CO., LTD.
NIPPON KOEI CO., LTD.
CTI ENGINEERING CO., LTD.

DESIGNED BY	CHECKED BY	DATE :	SCALE :
ISHII Masaki	MISHINA Takahiro	AUGUST 2012	
STRUCTURAL ENGINEER	TEAM LEADER	DWG. NO. KM-FG-002	SHEET NO.