【Drawings of Outline Design】

Drawings List

No-1： General Plan
No-2： Diversion Weir, Intake, Settling Basin Plan
No-3： Diversion Weir, Intake, Settling Basin Cross Section 1
No-4： Diversion Weir, Intake, Settling Basin Cross Section 2
No-5： Diversion Weir, Intake, Settling Basin Cross Section 3
No-6： Diversion Weir, Intake, Settling Basin Cross Section 4
No-7： Diversion Weir Cross Section
No-8： Intake and Settling Basin Front View, Longitudinal Profile
No-9： Headrace Plan 1
No-10：Headrace Plan 2
No-11：Headrace Channel Typical Section
No-12：Headrace Longitudinal Profile
No-13：Head Tank and Powerhouse Plan
No-14：Head Tank and Powerhouse Cross Section 1
No-15：Head Tank and Powerhouse Cross Section 2
No-16：Head Tank and Powerhouse Cross Section 3
No-17：Head Tank and Powerhouse Cross Section 4
No-18：Head Tank and Powerhouse Cross Section 5
No-19：Powerhouse Plan and Sections 1
No-20：Powerhouse Plan and Sections 2
No.21：General Section
No.22：Submergible Turbine Generator
No-23：Single Diagram
No-24：Distribution Design Priority 1
No-25：Distribution Design Priority 2
No.26：Standard MV Single Pole Design
No.27：Standard MV Double Pole Design
No.28：Standard MV Transformer Mounted Pole Design
No.29：Standard MV Pole Foundation Design
No-30：LV Distribution Design, Boxao
No-31：Standard LV Pole Design
No-32：Standard LV Pole Foundation Design

General Plan

s=1:2,000

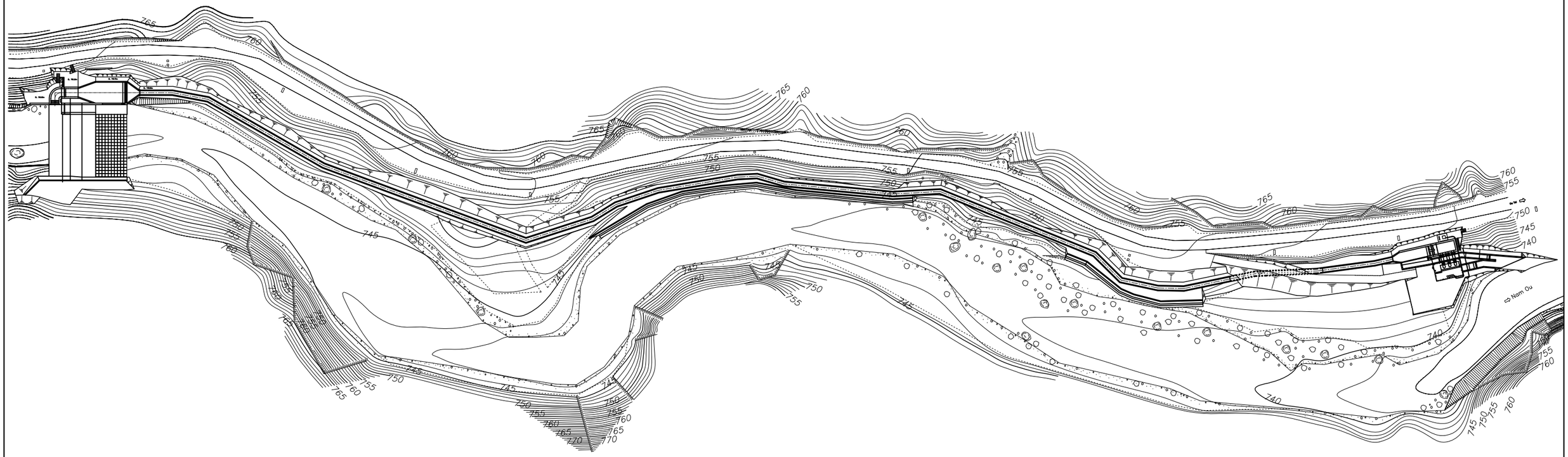

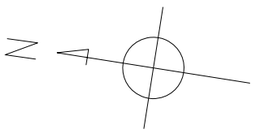

0 20 40 60 80 100 meters

S= 1 : 2,000

No.1

Gnod Ou Mini-Hydropower Plant			
General Plan			
Scale	1:2,000	Date	

Preparatory Survey for
Mini-Hydropower Development Project
in Lao PDR
Japan International Cooperation Agency (JICA)

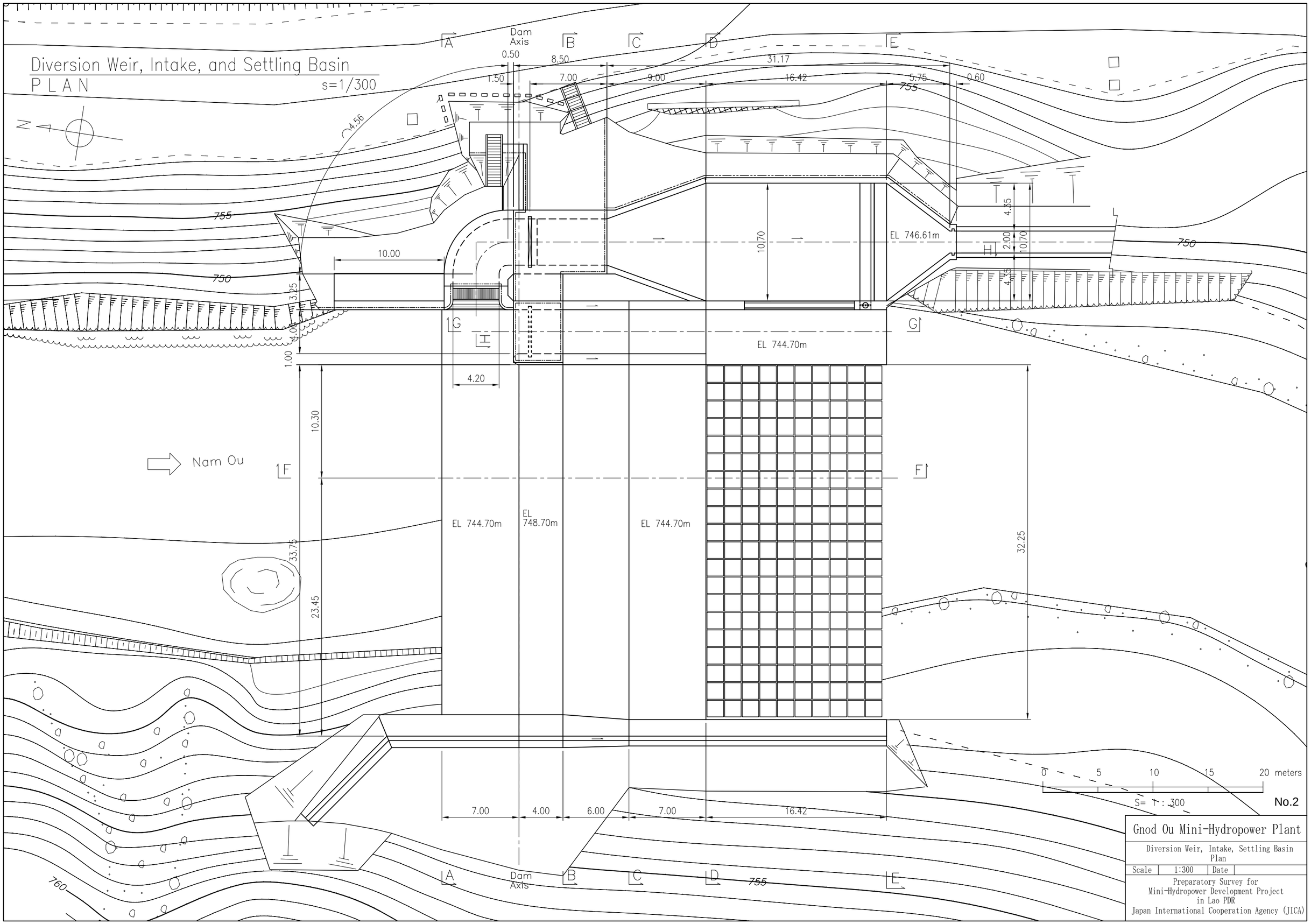
Diversion Weir, Intake, and Settling Basin
PLAN
s=1/300
N
Dam Axis
A
B
C
D
E
F
G
H
0.50
8.50
31.17
1.50
7.00
9.00
16.42
5.75
0.60
755
750
760
4.56
10.00
3.25
4.00
1.00
4.20
10.30
33.75
23.45
10.70
EL 746.61m
4.35
2.00
EL 744.70m
EL 748.70m
32.25
Nam Ou
7.00
4.00
6.00
7.00
16.42
0 5 10 15 20 meters
S= 1 : 300
No.2
Gnod Ou Mini-Hydropower Plant
Diversion Weir, Intake, Settling Basin Plan
Scale 1:300
Date
Preparatory Survey for
Mini-Hydropower Development Project
in Lao PDR
Japan International Cooperation Agency (JICA)

Diversion Weir
CROSS SECTION s=1/200

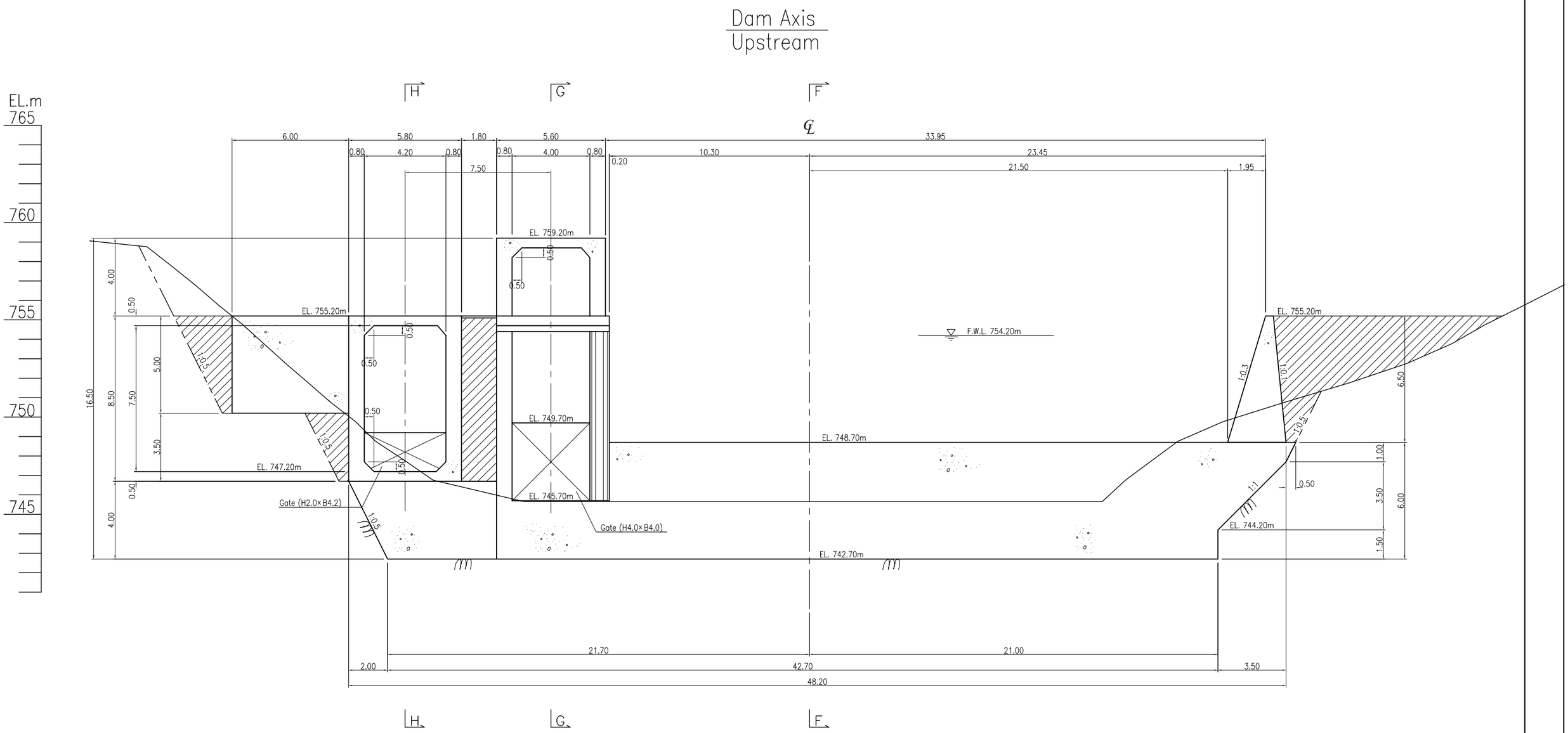

No.3

Gnod Ou Mini-Hydropower Plant			
Diversion Weir, Intake, Settling Basin Cross Section 1			
Scale	1:200	Date	
Preparatory Survey for Mini-Hydropower Development Project in Lao PDR Japan International Cooperation Agency (JICA)			

Diversion Weir
CROSS SECTION s=1/200

A – A

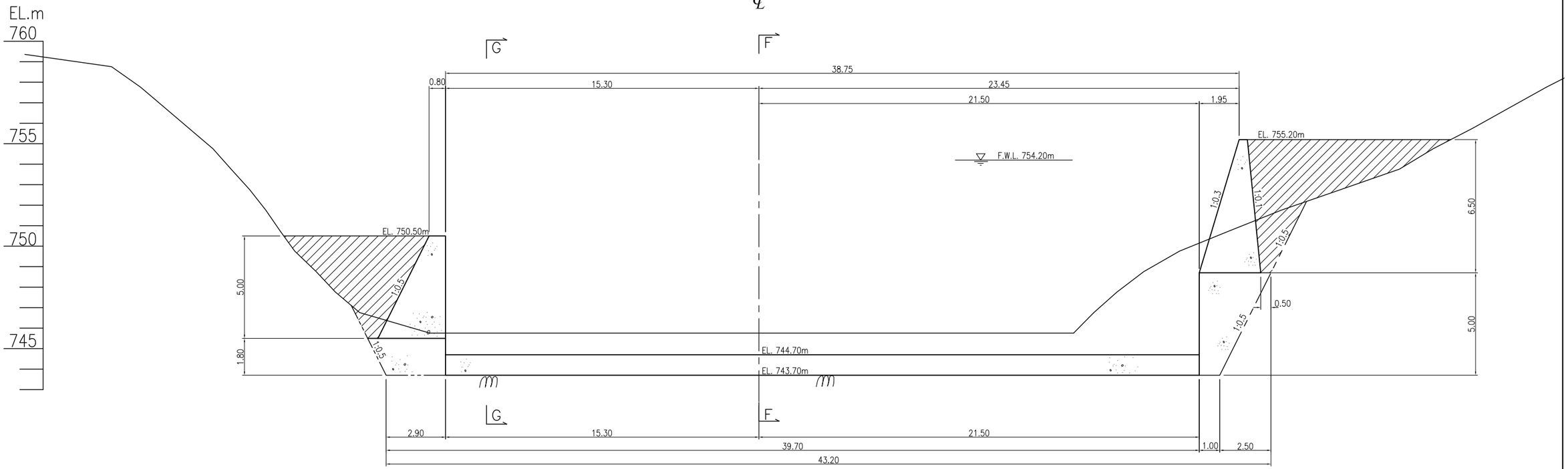

B – B

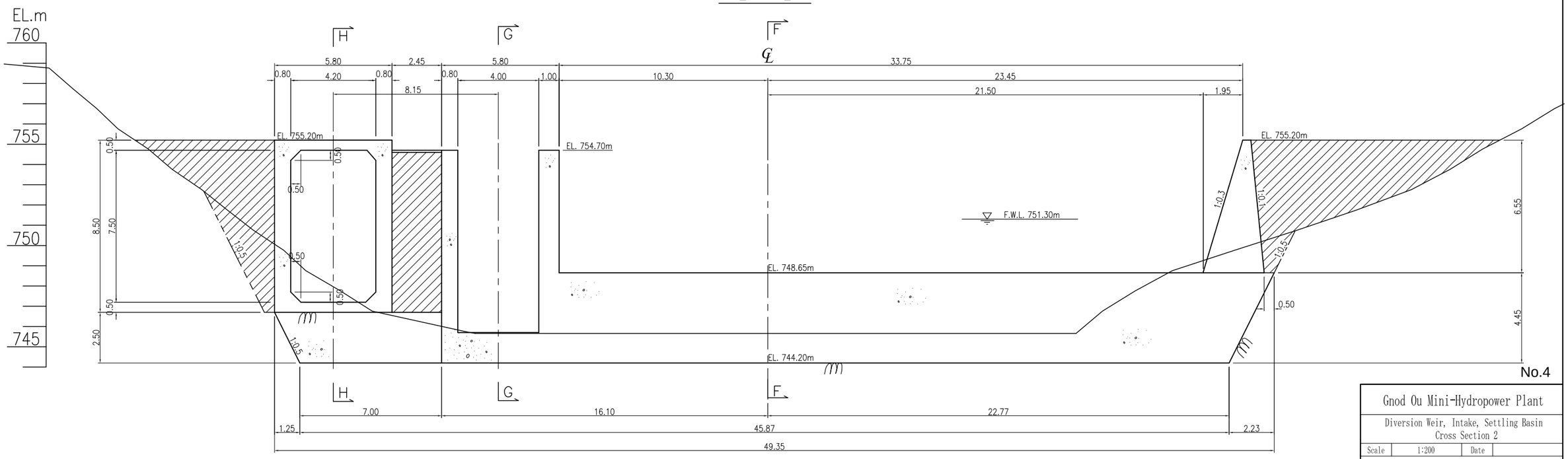

No.4

Gnod Ou Mini-Hydropower Plant			
Diversion Weir, Intake, Settling Basin Cross Section 2			
Scale	1:200	Date	
Preparatory Survey for Mini-Hydropower Development Project in Lao PDR Japan International Cooperation Agency (JICA)			

Diversion Weir
CROSS SECTION s=1/200

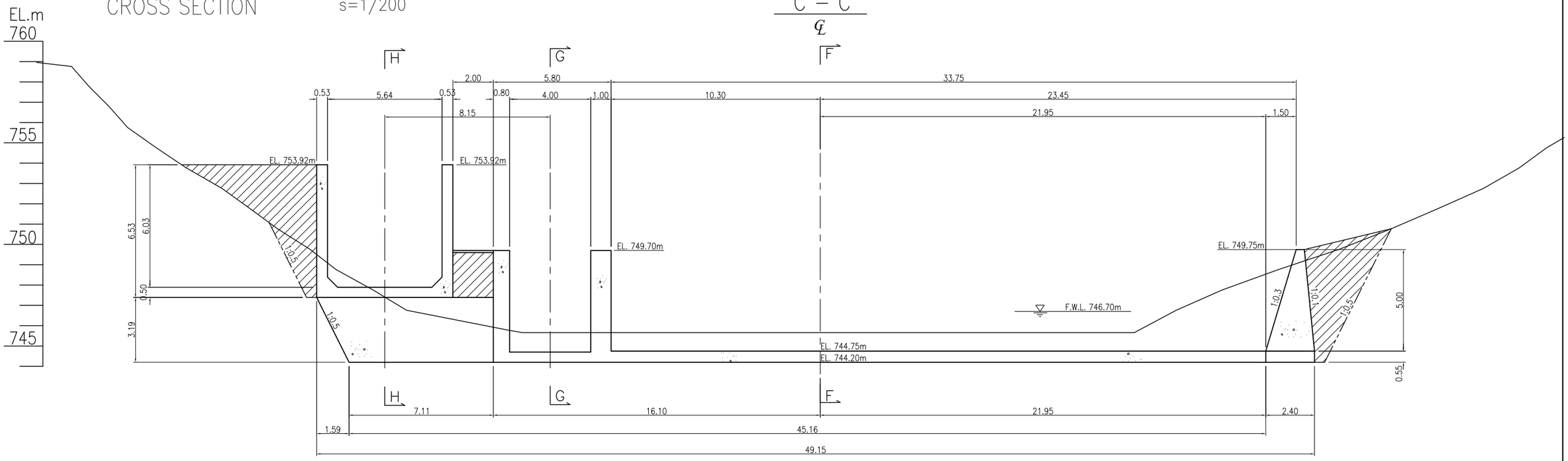

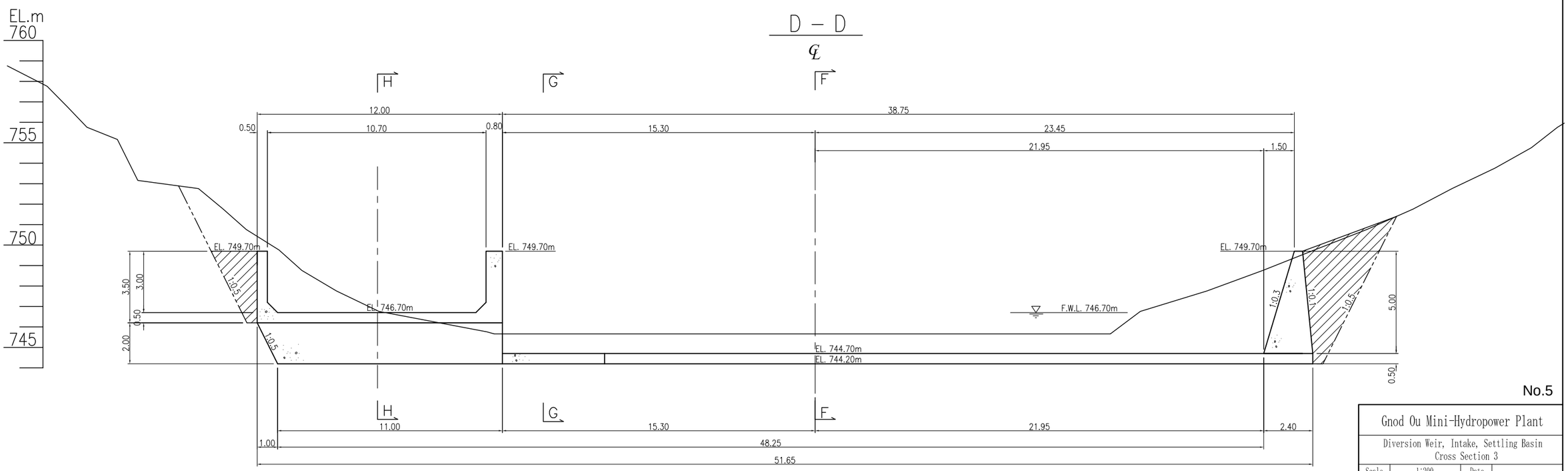

No.5

Gnod Ou Mini-Hydropower Plant			
Diversion Weir, Intake, Settling Basin Cross Section 3			
Scale	1:200	Date	
Preparatory Survey for Mini-Hydropower Development Project in Lao PDR Japan International Cooperation Agency (JICA)			

Diversion Weir
CROSS SECTION s=1/200

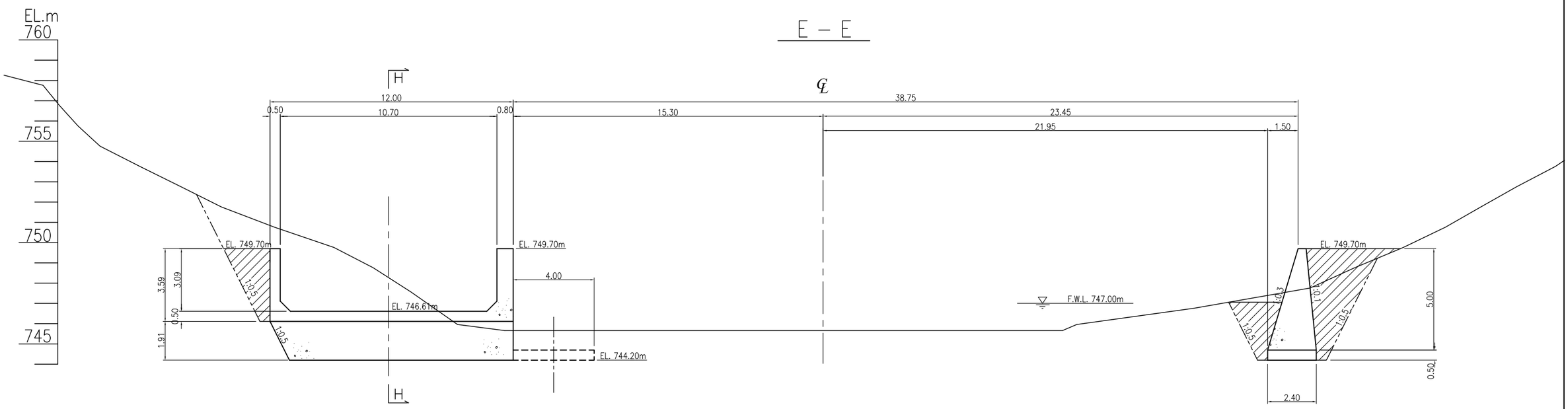

No.6

Gnod Ou Mini-Hydropower Plant			
Diversion Weir, Intake, Settling Basin Cross Section 4			
Scale	1:200	Date	
Preparatory Survey for Mini-Hydropower Development Project in Lao PDR Japan International Cooperation Agency (JICA)			

Diversion Weir
CROSS SECTION

s=1/200

F – F

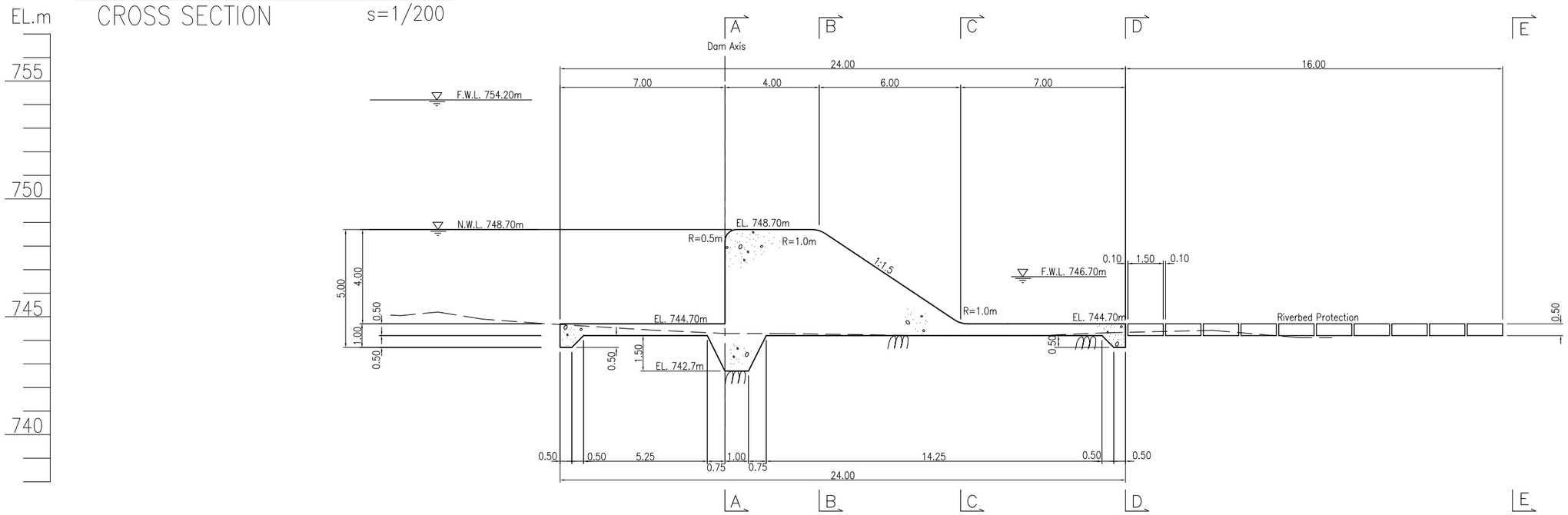

G – G

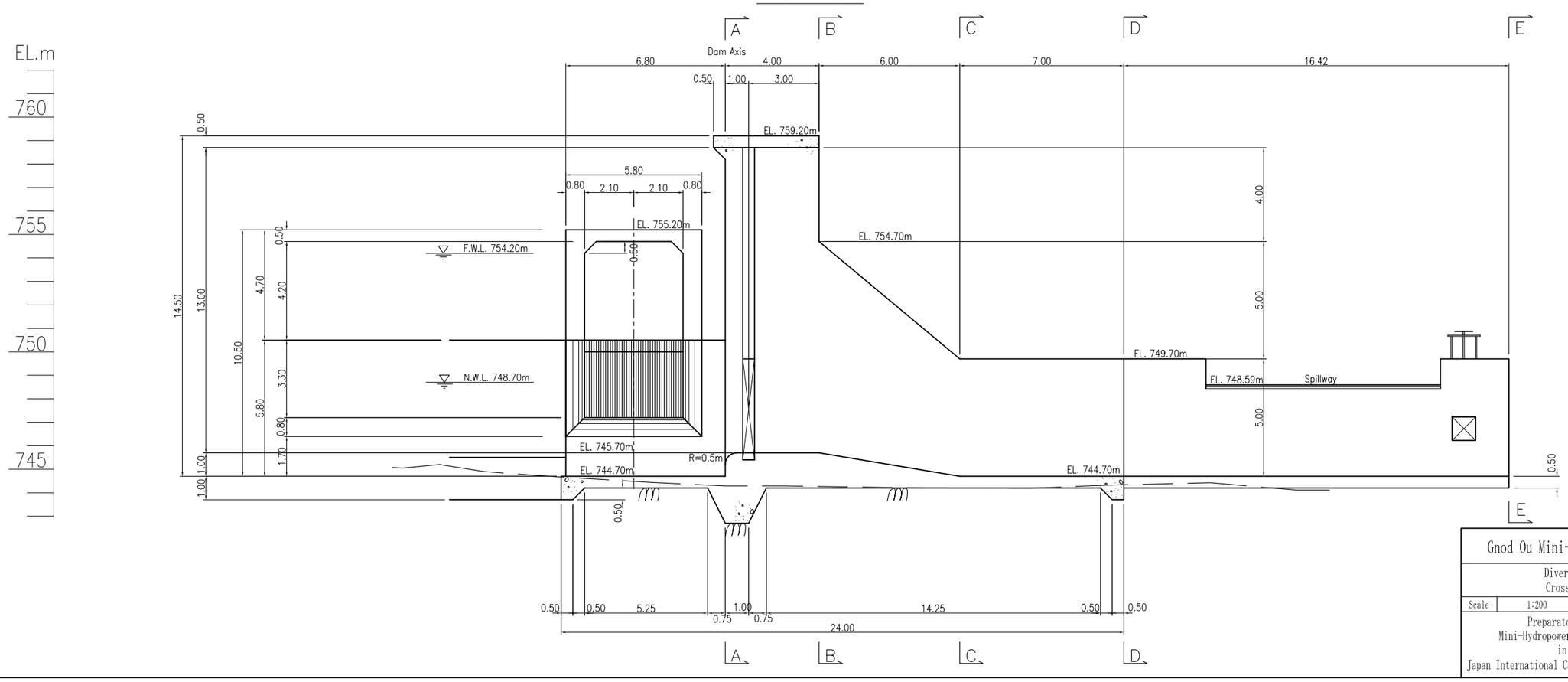

No.7

Gnod Ou Mini-Hydropower Plant			
Diversion Weir Cross Section			
Scale	1:200	Date	
Preparatory Survey for Mini-Hydropower Development Project in Lao PDR Japan International Cooperation Agency (JICA)			

Intake and Settling Basin
LONGITUDINAL SECTION s=1/200

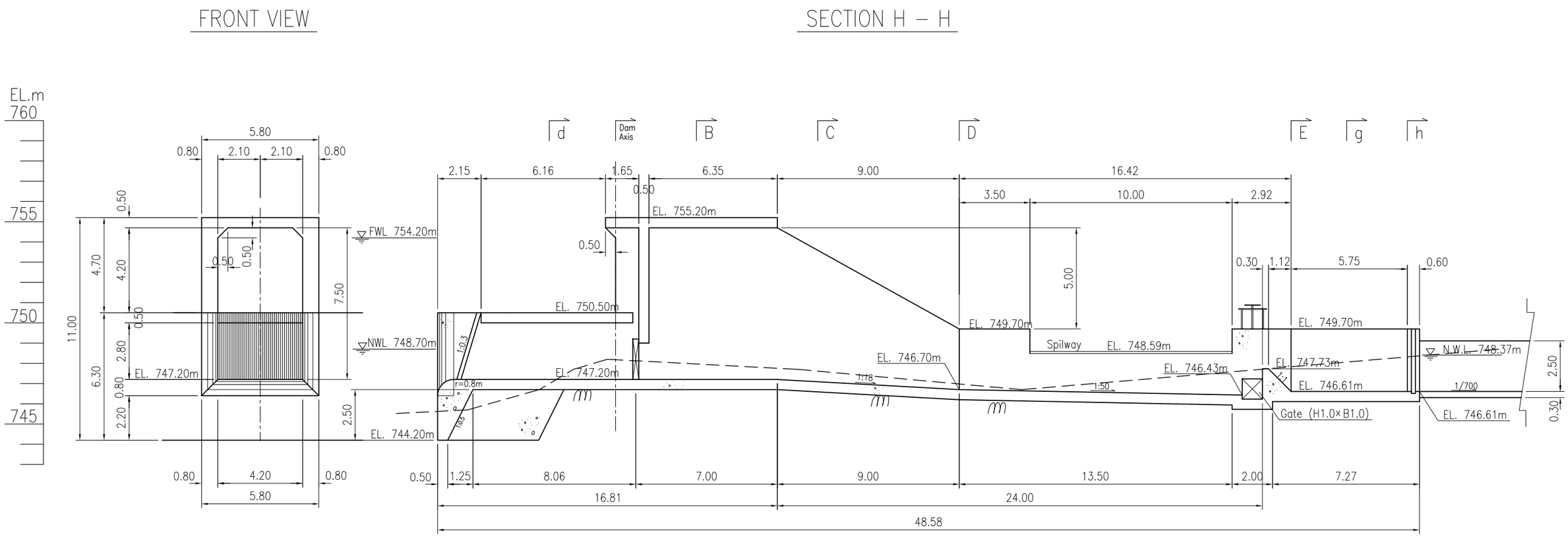

No.8

Gnod Ou Mini-Hydropower Plant			
Intake and Settling Basin Front View, Longitudinal Profile			
Scale	1:200	Date	
Preparatory Survey for Mini-Hydropower Development Project in Lao PDR Japan International Cooperation Agency (JICA)			

Headrace
P L A N (1) s=1:1,000

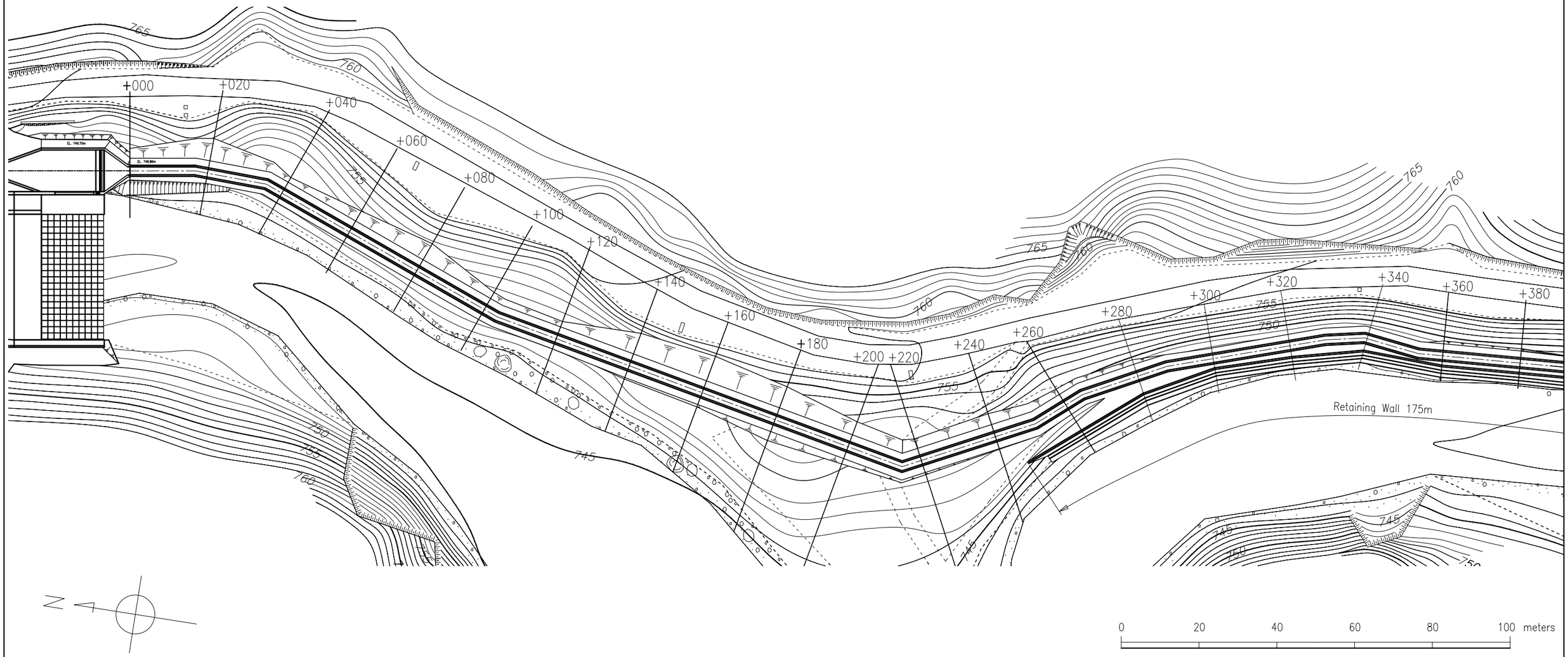

No.9

Gnod Ou Mini-Hydropower Plant			
Headrace Plan (1)			
Scale	1:1,000	Date	
Preparatory Survey for Mini-Hydropower Development Project in Lao PDR Japan International Cooperation Agency (JICA)			

Headrace
P L A N (2) s=1:1,000

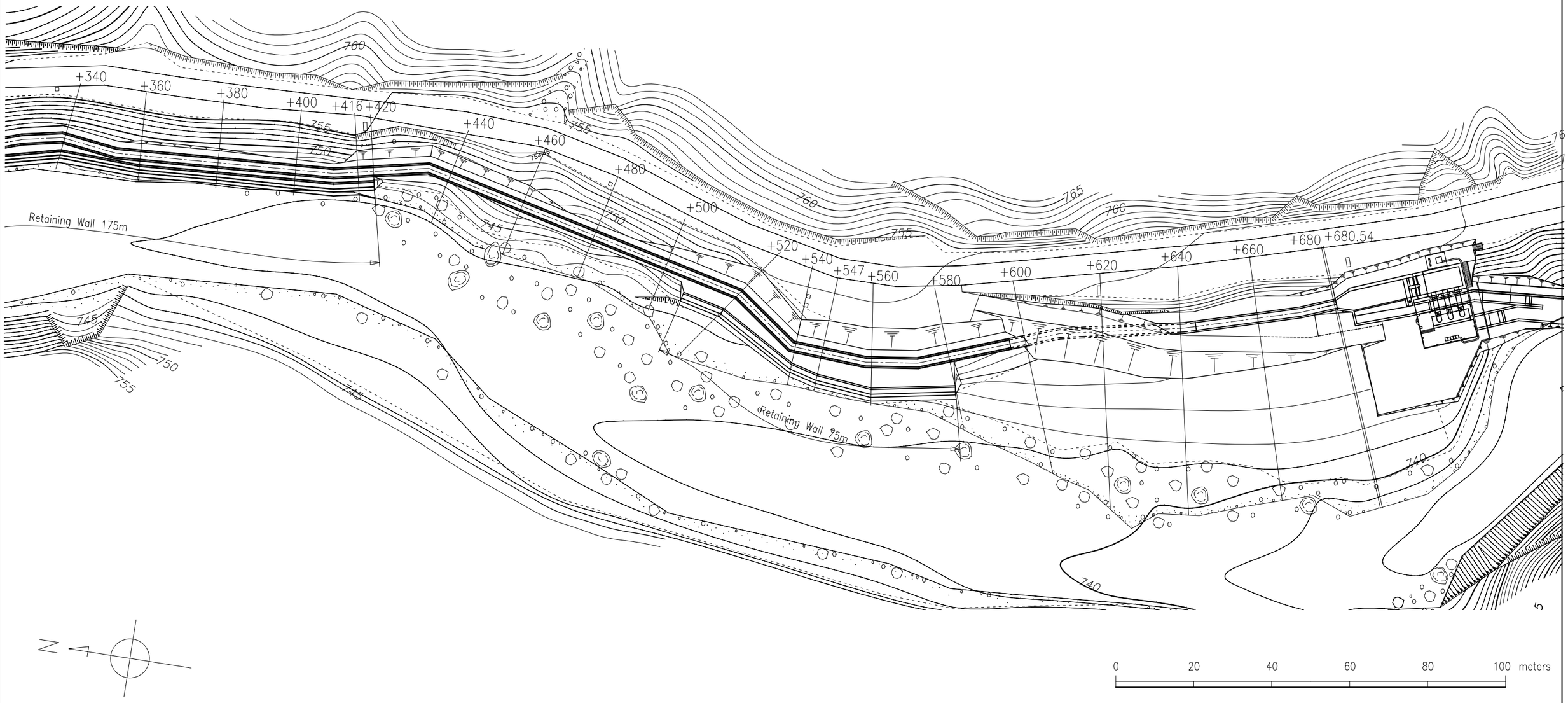

No.10

Gnod Ou Mini-Hydropower Plant			
Headrace Plan (2)			
Scale	1:1,000	Date	
Preparatory Survey for Mini-Hydropower Development Project in Lao PDR Japan International Cooperation Agency (JICA)			

Typical Section of Headrace Channel

s=1:100

Open Channel

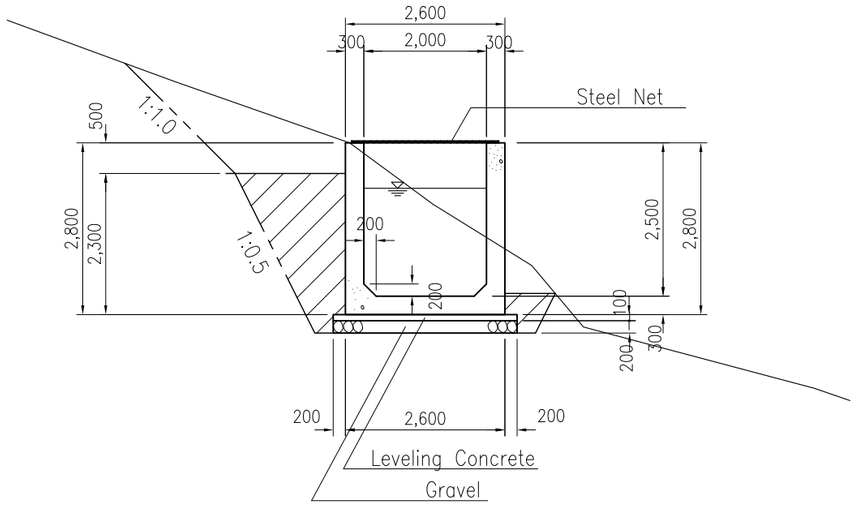

Box Culvert

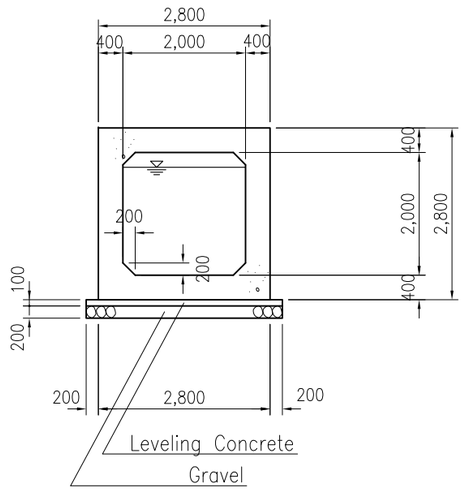

Typical Section of Concrete Gravity Wall

s=1:100

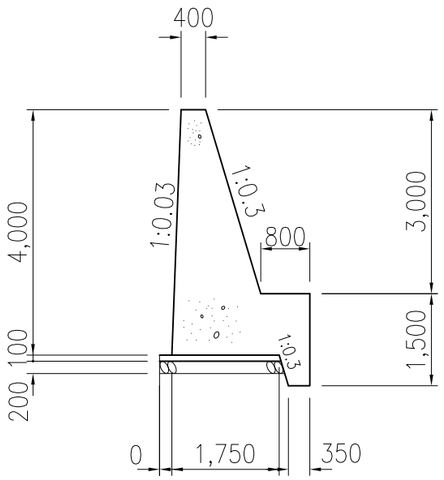

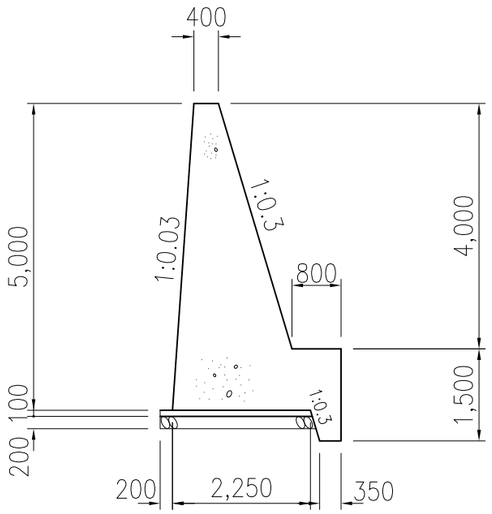

No.11

Gnod Ou Mini-Hydropower Plant			
Headrace Channel Typical Section of Waterway and Retaining Wall			
Scale	1:100	Date	
Preparatory Survey for Mini-Hydropower Development Project in Lao PDR Japan International Cooperation Agency (JICA)			

Longitudinal Profile of Headrace

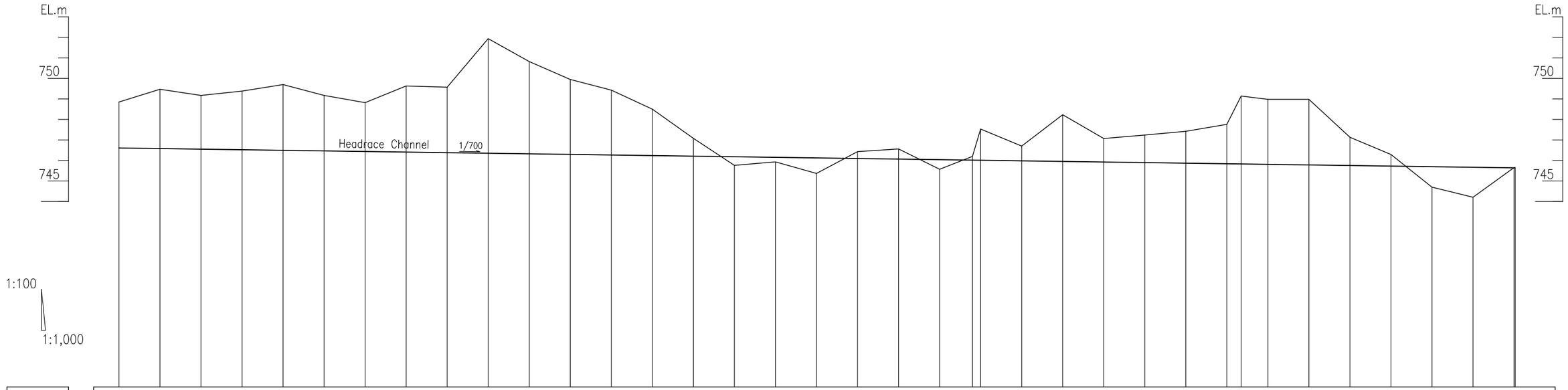

Section No.	Distance (m)	Acc. Distance (m)	Ground Height (EL. m)	Waterway Bed Height (EL. m)
+000	-	0.00	748.85	746.61
+020	20.00	20.00	749.47	746.58
+040	20.00	40.00	749.17	746.55
+060	20.00	60.00	749.38	746.52
+080	20.00	80.00	749.70	746.50
+100	20.00	100.00	749.17	746.47
+120	20.00	120.00	748.82	746.44
+140	20.00	140.00	749.63	746.41
+160	20.00	160.00	749.57	746.38
+180	20.00	180.00	751.94	746.35
+200	20.00	200.00	750.82	746.32
+220	20.00	220.00	749.95	746.30
+240	20.00	240.00	749.73	746.27
+260	20.00	260.00	748.50	746.24
+280	20.00	280.00	747.08	746.21
+300	20.00	300.00	745.76	746.18
+320	20.00	320.00	745.93	746.15
+340	20.00	340.00	745.37	746.12
+360	20.00	360.00	746.43	746.10
+380	20.00	380.00	746.56	746.07
+400	20.00	400.00	745.57	746.04
+416	16.00	416.00	746.20	746.02
+420	4.00	420.00	747.53	746.01
+440	20.00	440.00	746.70	745.98
+460	20.00	460.00	748.23	745.95
+480	20.00	480.00	747.07	745.92
+500	20.00	500.00	747.24	745.90
+520	20.00	520.00	747.42	745.87
+540	20.00	540.00	747.76	745.84
+547	7.00	547.00	749.14	745.83
+560	13.00	560.00	748.98	745.81
+580	20.00	580.00	748.98	745.78
+600	20.00	600.00	747.13	745.75
+620	20.00	620.00	746.29	745.72
+640	20.00	640.00	744.70	745.70
+660	20.00	660.00	744.21	745.67
+680	20.00	680.00	745.65	745.64
+680.54	0.54	680.54	745.65	745.64

No.12

Gnod Ou Mini-Hydropower Plant

Headrace
Longitudinal Profile

Scale V=1:100, H=1:1,000 Date

Preparatory Survey for
Mini-Hydropower Development Project
in Lao PDR
Japan International Cooperation Agency (JICA)

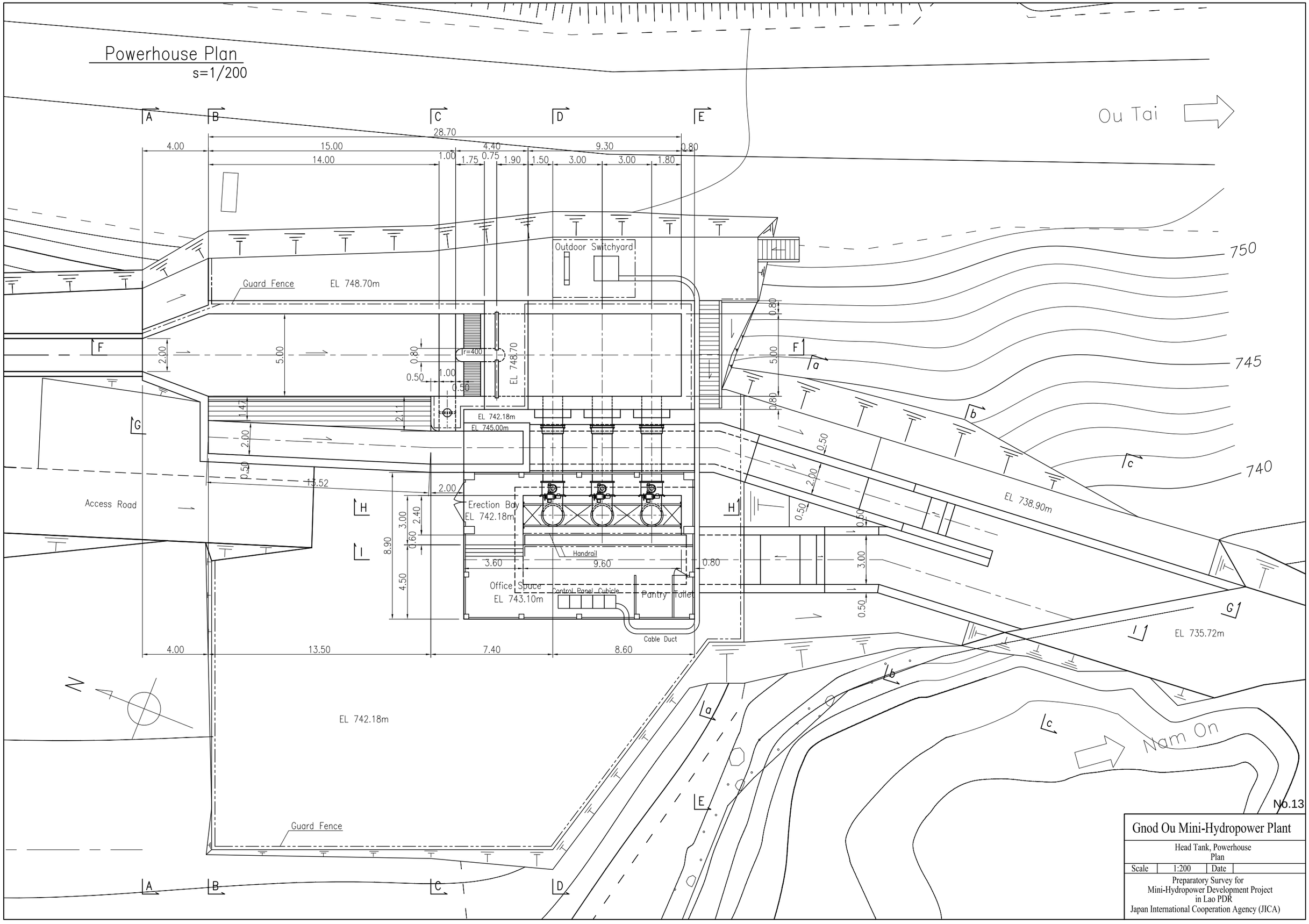
Powerhouse Plan
s=1/200
Ou Tai
Nam On
Outdoor Switchyard
Guard Fence
EL 748.70m
EL 748.70
EL 742.18m
EL 745.00m
Erection Bay
EL 742.18m
Handrail
Office Space
EL 743.10m
Control Panel Cubicle
Pantry
Toilet
Cable Duct
Access Road
EL 738.90m
EL 735.72m
EL 742.18m
Guard Fence
750
745
740
28.70
4.00
15.00
14.00
4.40
9.30
1.00
1.75
0.75
1.90
1.50
3.00
3.00
1.80
0.80
2.00
5.00
r=400
0.50
1.00
0.50
1.47
2.11
2.00
0.50
13.52
2.00
3.00
2.40
0.60
8.90
4.50
3.60
9.60
0.80
3.00
0.50
4.00
13.50
7.40
8.60
N
No.13
Gnod Ou Mini-Hydropower Plant
Head Tank, Powerhouse
Plan
Scale
1:200
Date
Preparatory Survey for
Mini-Hydropower Development Project
in Lao PDR
Japan International Cooperation Agency (JICA)

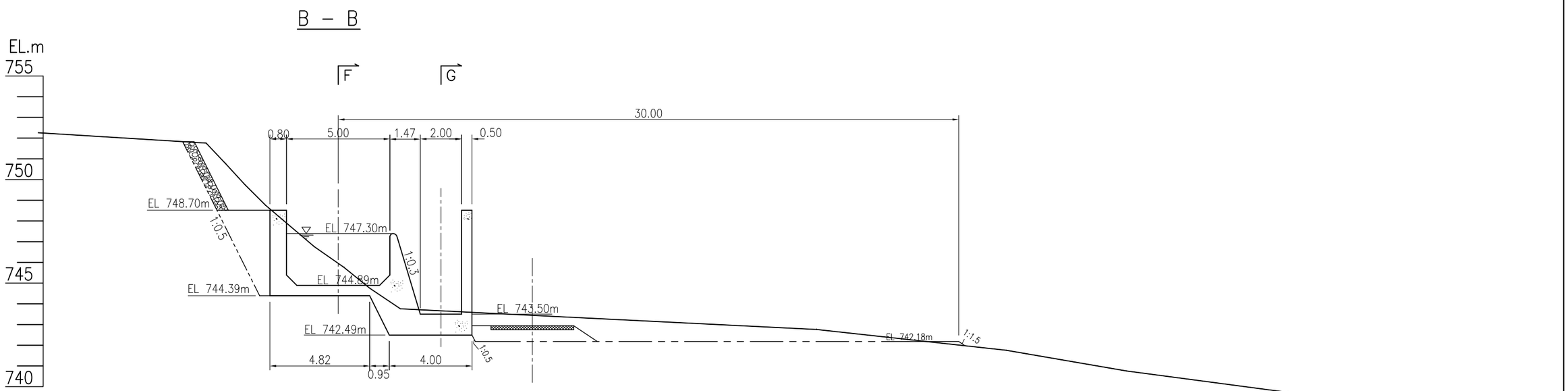

No.14

Gnod Ou Mini-Hydropower Plant			
Head Tank, Powerhouse Cross Section (1)			
Scale	1:200	Date	
Preparatory Survey for Mini-Hydropower Development Project in Lao PDR Japan International Cooperation Agency (JICA)			

C – C

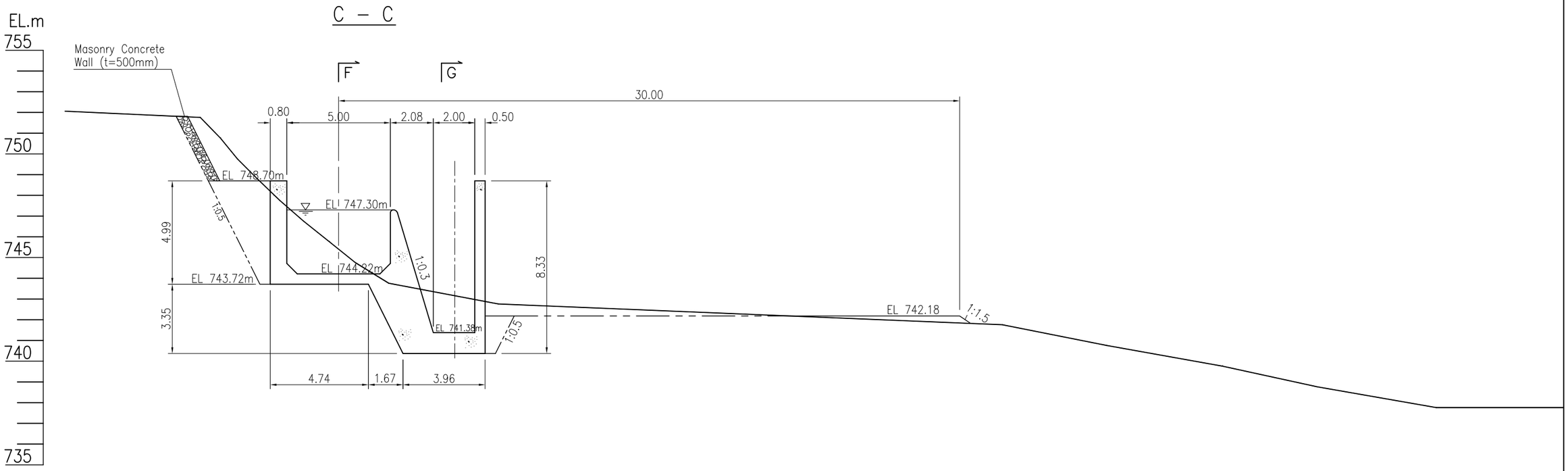

D – D

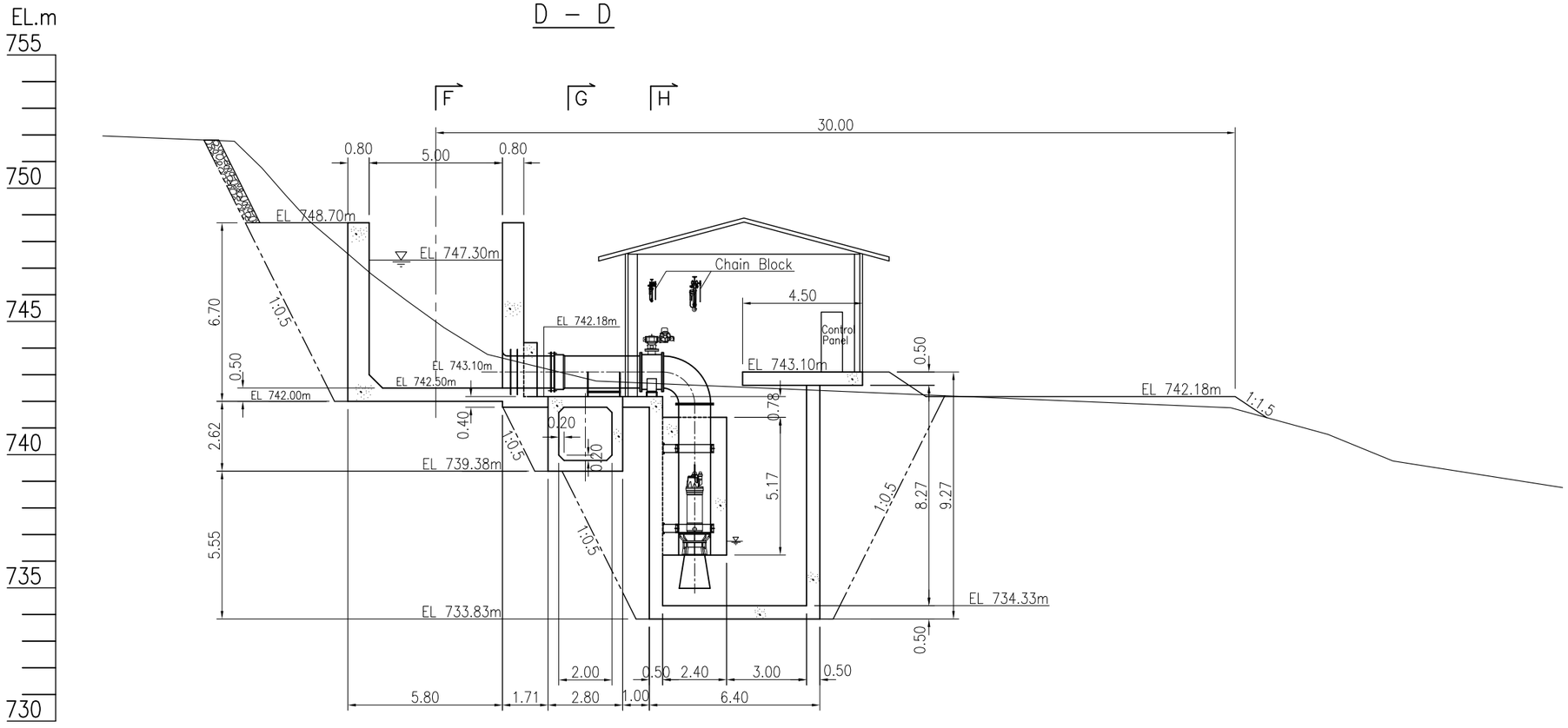

No.15

Gnod Ou Mini-Hydropower Plant		
Head Tank, Powerhouse Cross Section (2)		
Scale	1:200	Date
Preparatory Survey for Mini-Hydropower Development Project in Lao PDR Japan International Cooperation Agency (JICA)		

E – E

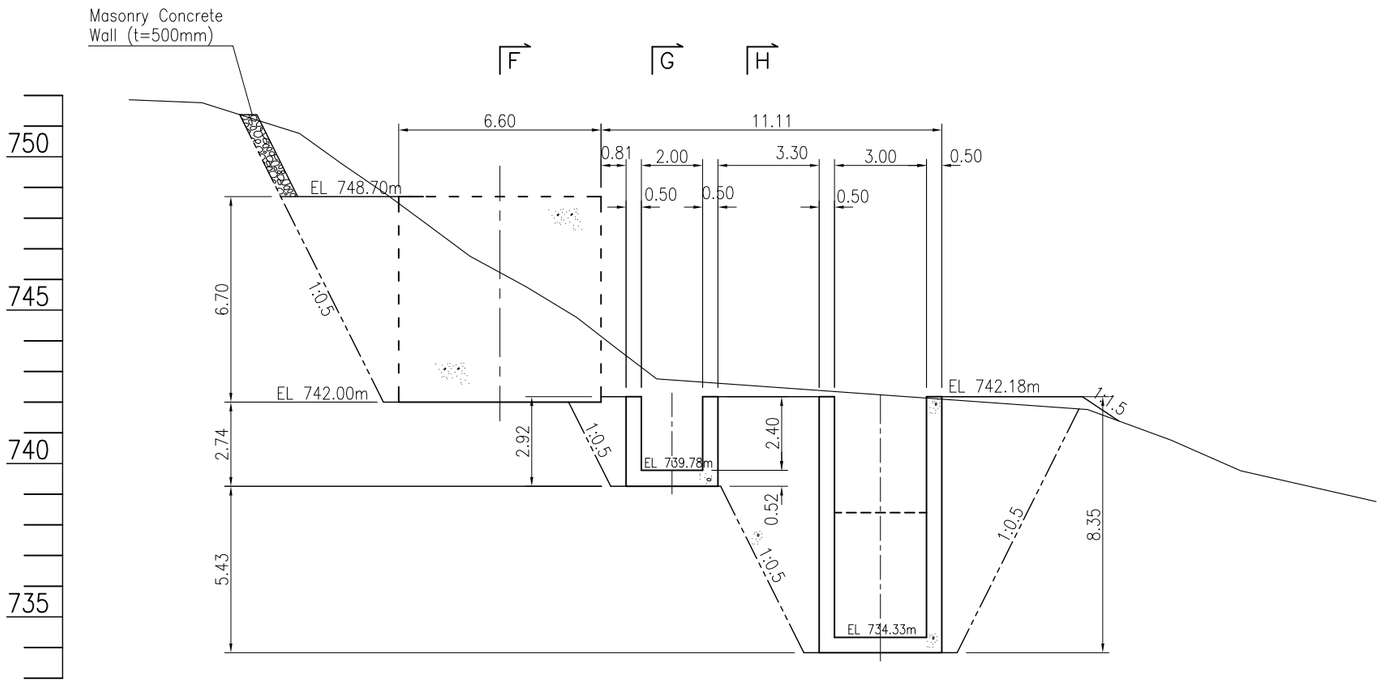

F – F

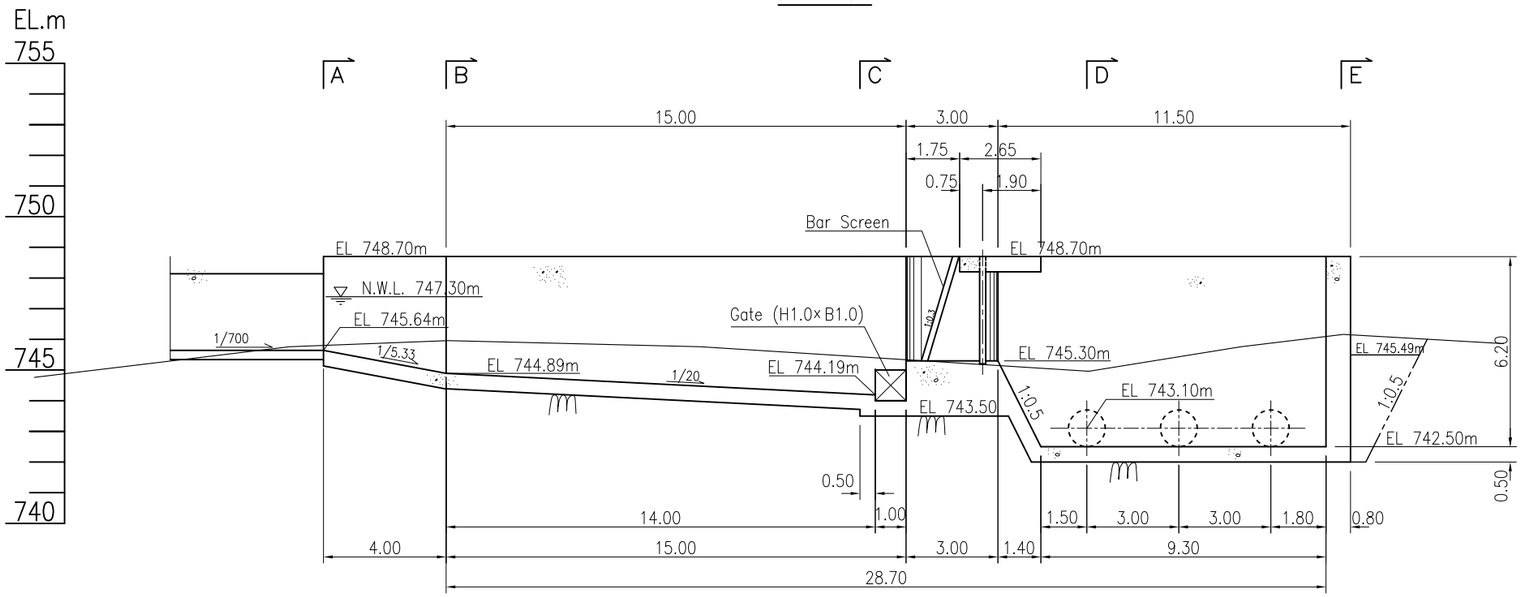

No.16

Gnod Ou Mini-Hydropower Plant		
Head Tank, Powerhouse Cross Section (3)		
Scale	1:200	Date
Preparatory Survey for Mini-Hydropower Development Project in Lao PDR Japan International Cooperation Agency (JICA)		

G – G

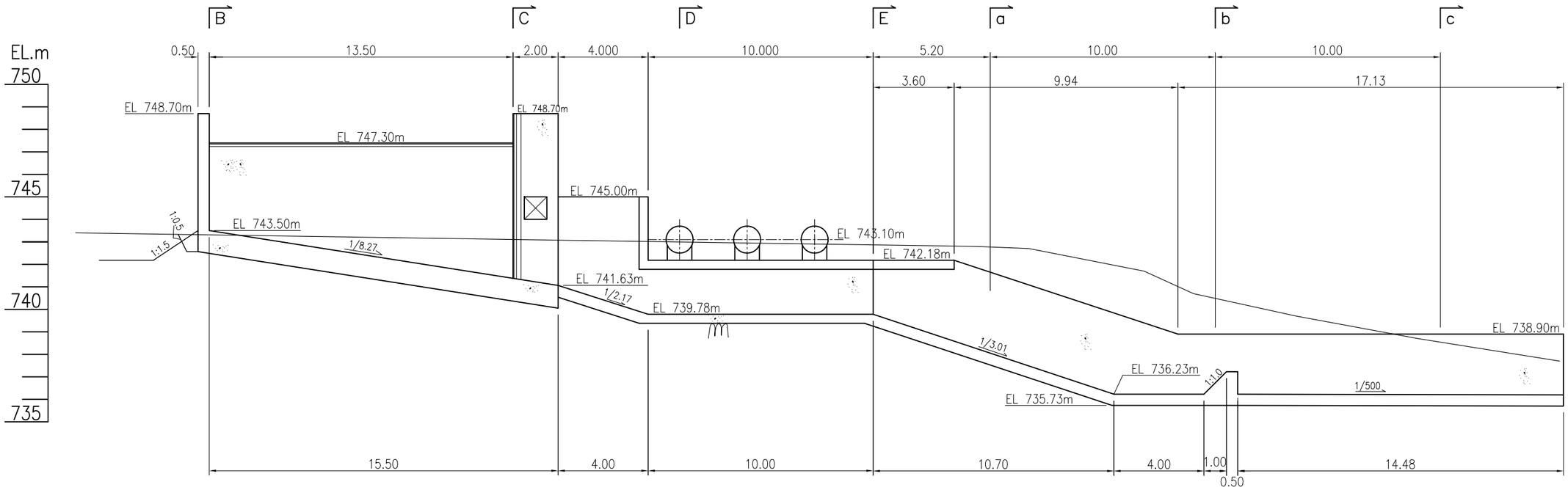

H – H

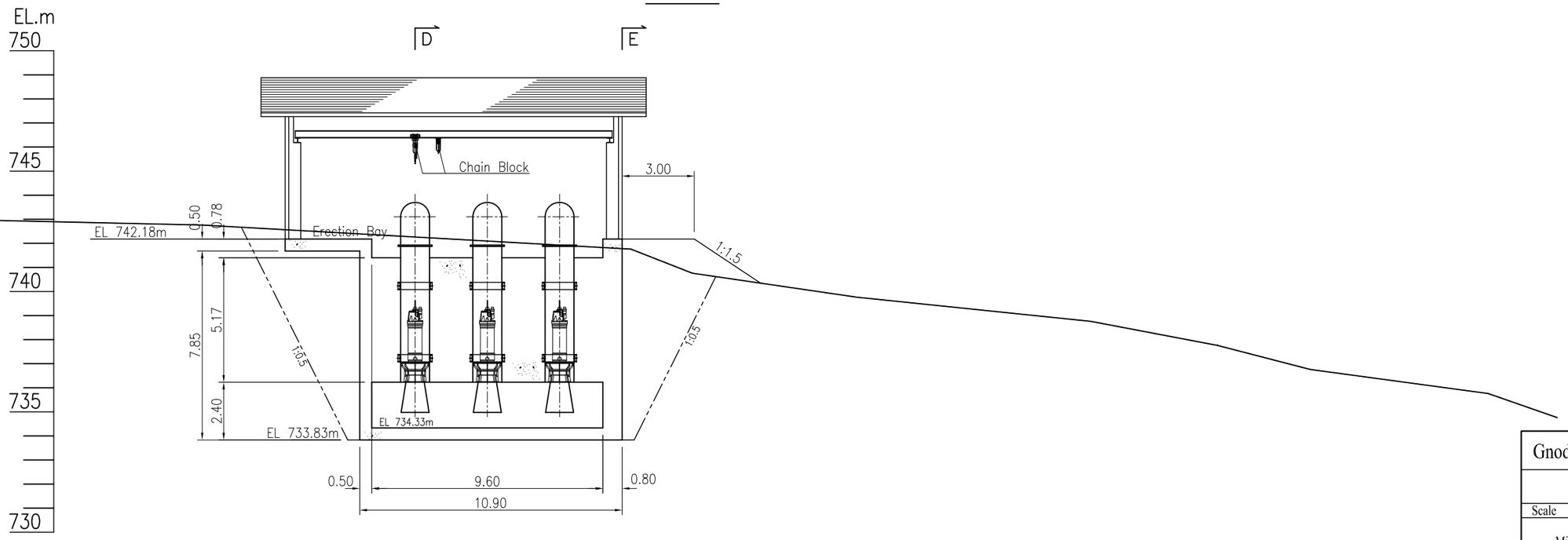

No.17

Gnod Ou Mini-Hydropower Plant			
Head Tank, Powerhouse Cross Section (4)			
Scale	1:200	Date	
Preparatory Survey for Mini-Hydropower Development Project in Lao PDR Japan International Cooperation Agency (JICA)			

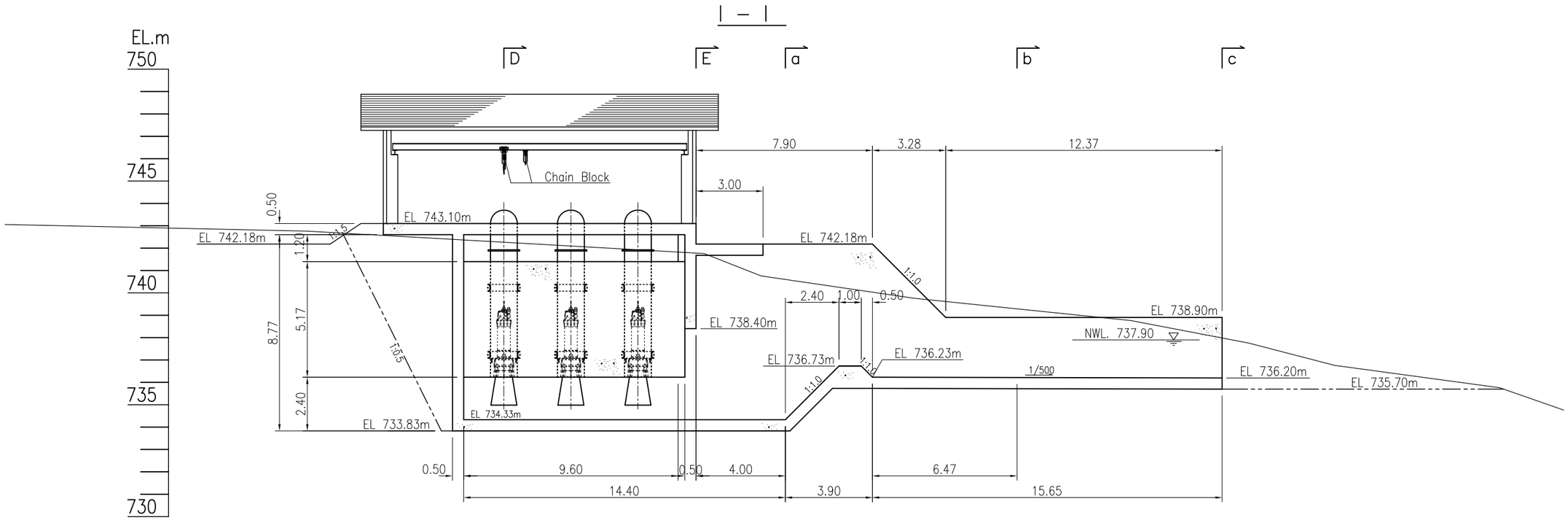

No.18

Gnod Ou Mini-Hydropower Plant			
Head Tank, Powerhouse Cross Section (5)			
Scale	1:200	Date	
Preparatory Survey for Mini-Hydropower Development Project in Lao PDR Japan International Cooperation Agency (JICA)			

PLAN

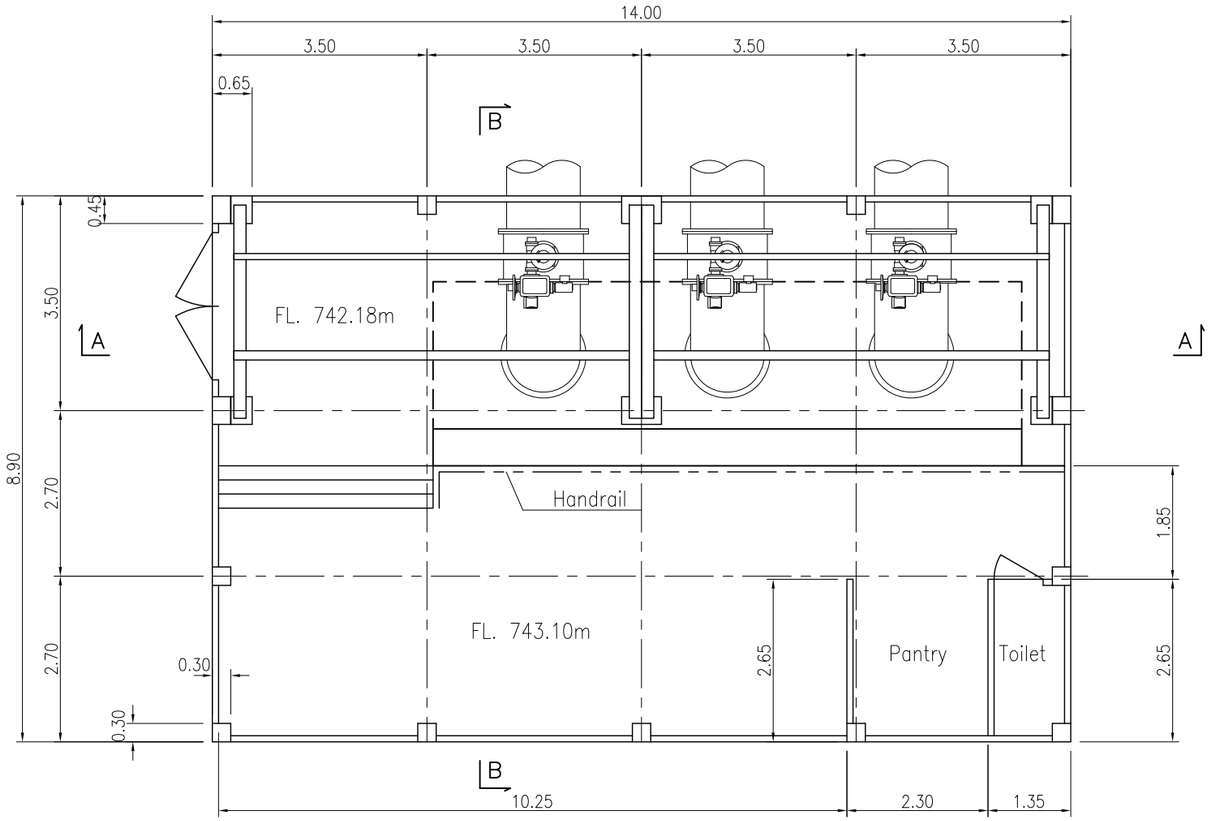

B – B

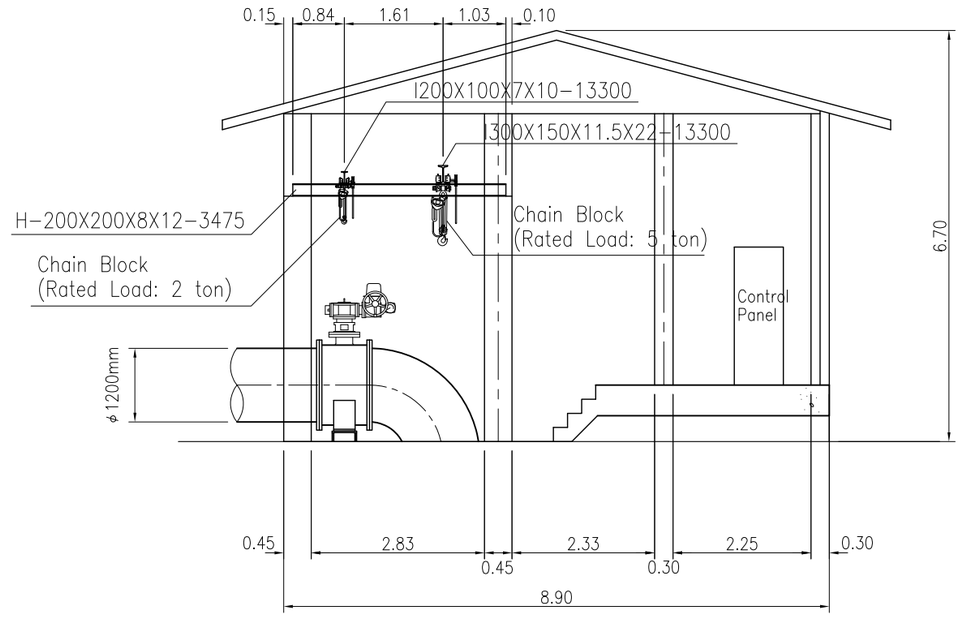

A – A

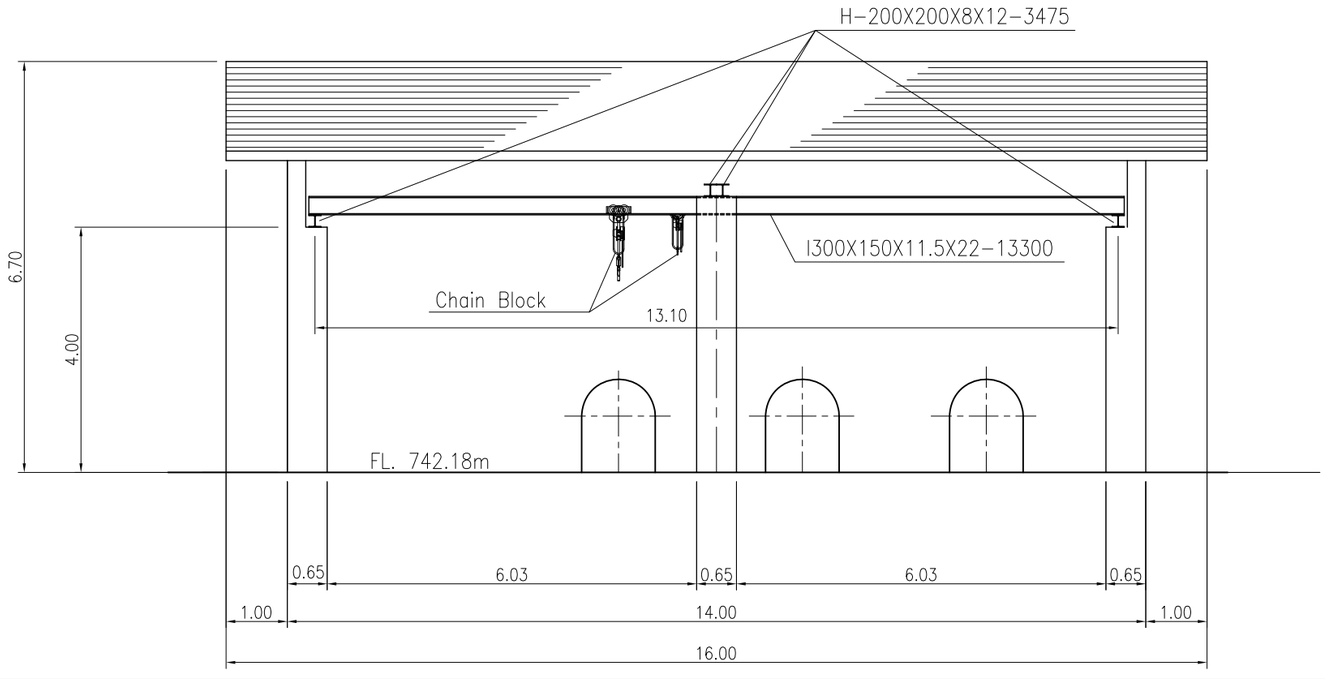

No.19

Gnod Ou Mini-Hydropower Plant			
Powerhouse Plan and Sections (1)			
Scale	1:100	Date	
Preparatory Survey for Mini-Hydropower Development Project in Lao PDR Japan International Cooperation Agency (JICA)			

FRONT VIEW

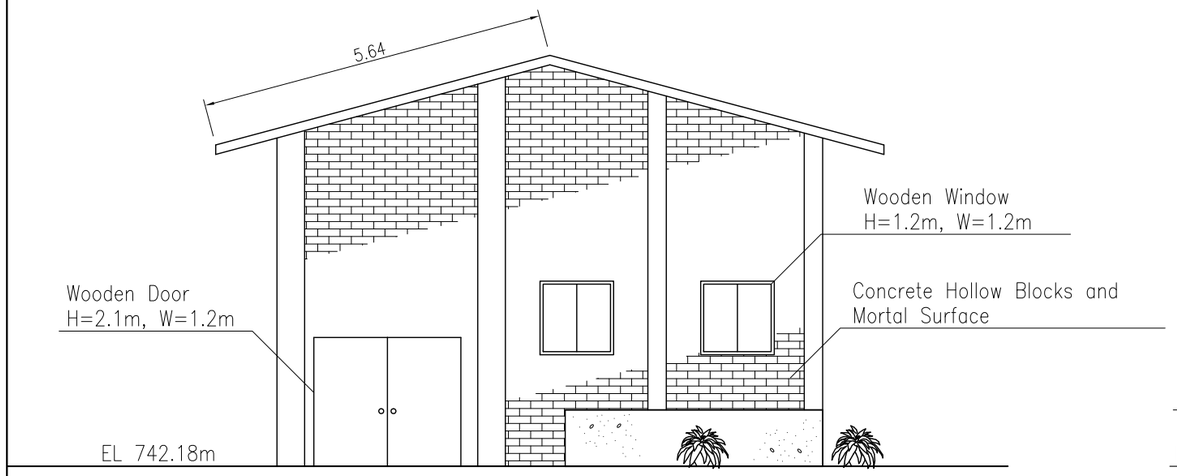

SIDE VIEW
RIVER SIDE

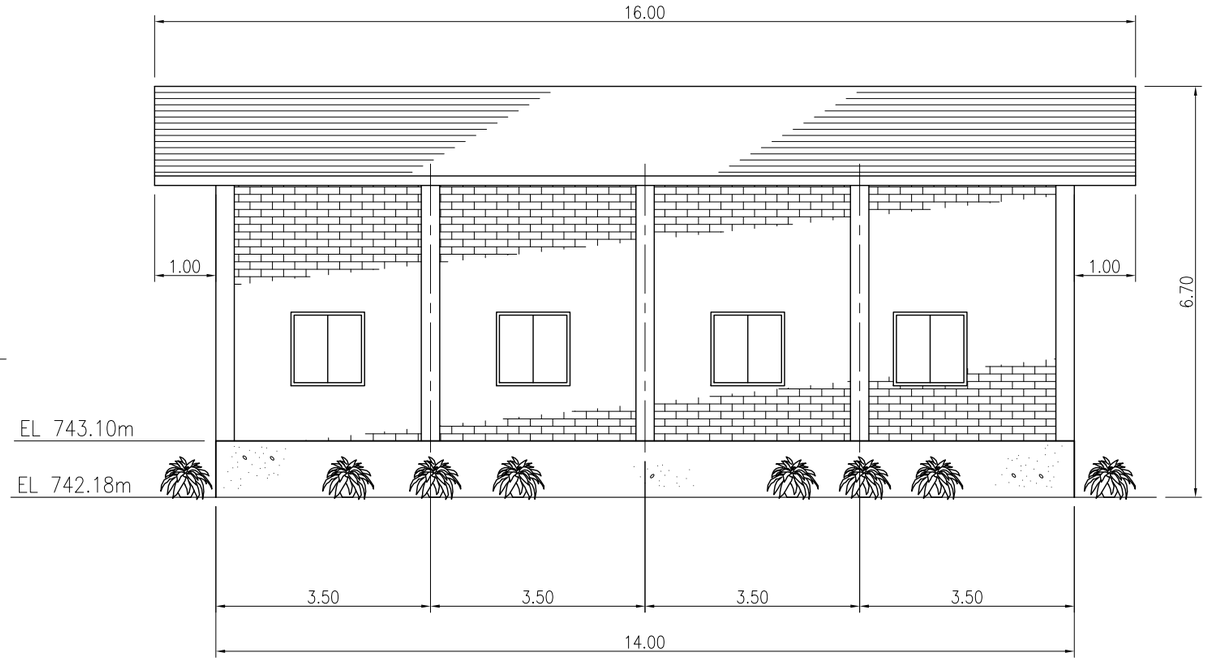

BACK VIEW

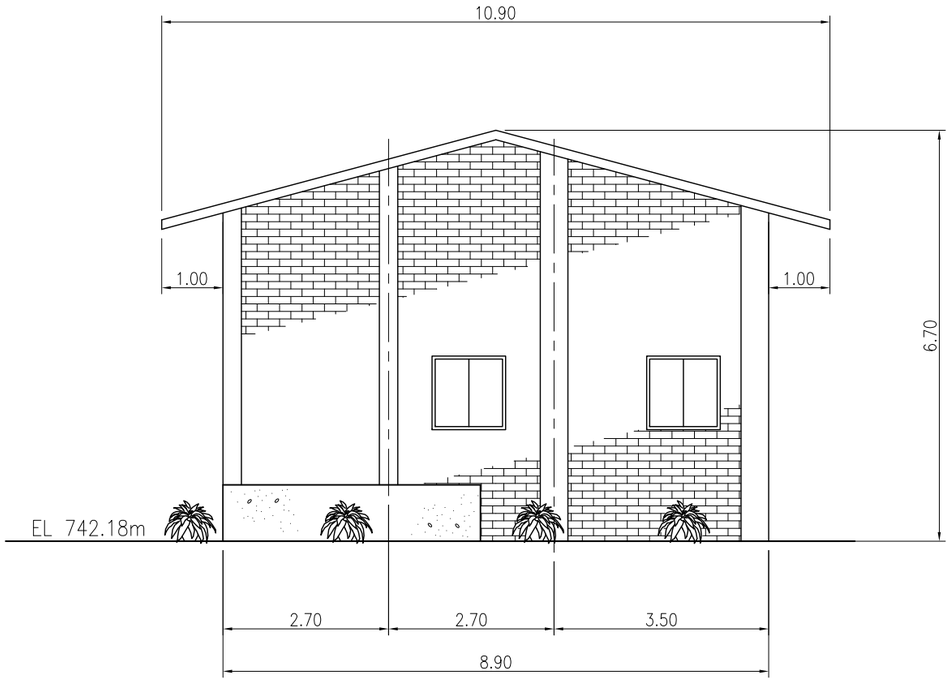

SIDE VIEW
HEAD TANK SIDE

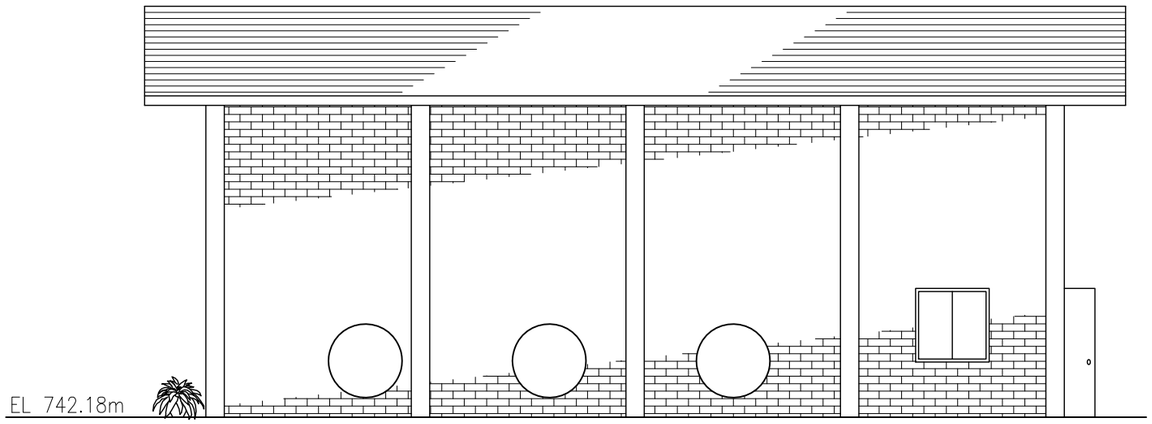

No.20

Gnod Ou Mini-Hydropower Plant		
Powerhouse Plan and Sections (2)		
Scale	1:100	Date
Preparatory Survey for Mini-Hydropower Development Project in Lao PDR Japan International Cooperation Agency (JICA)		

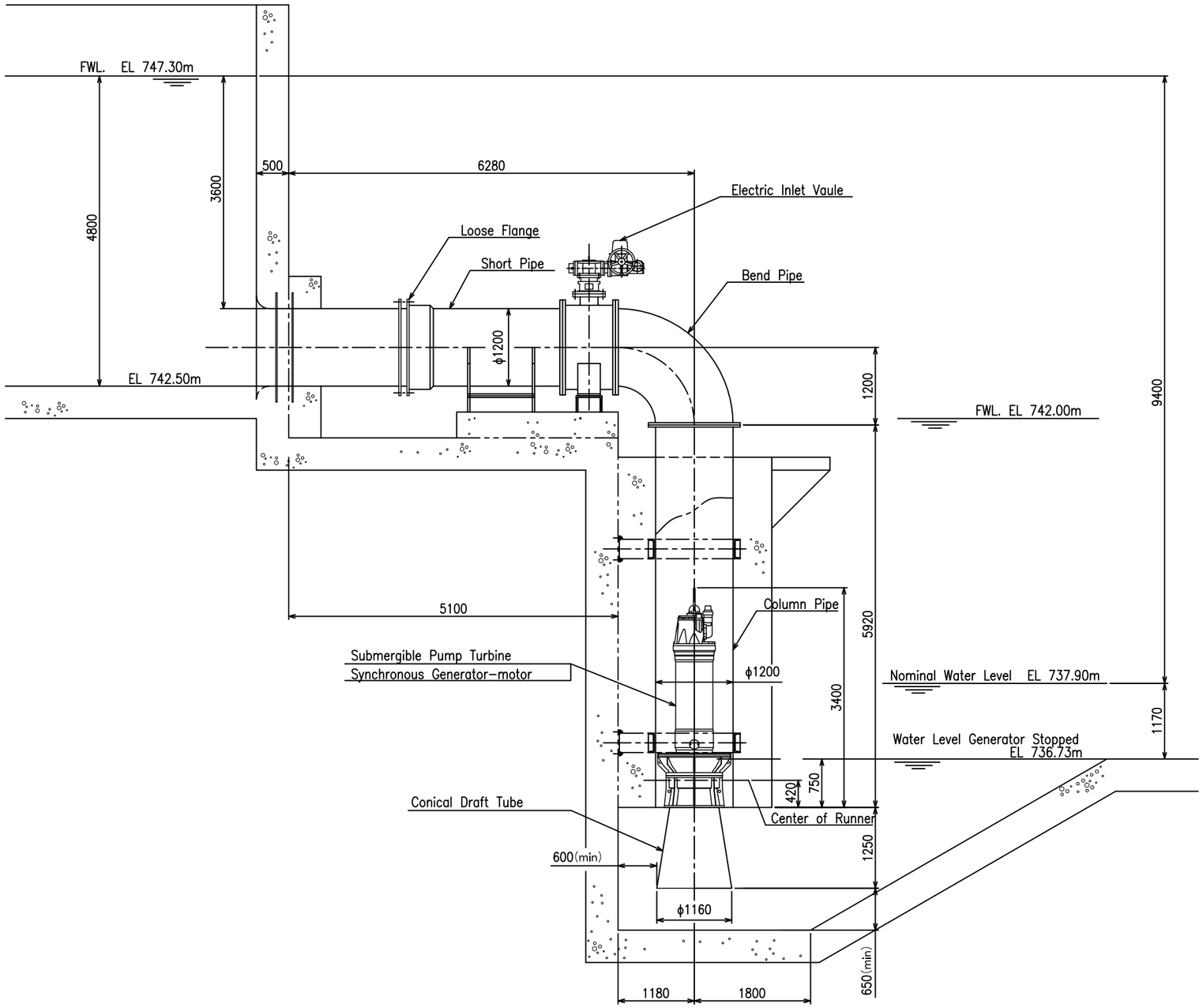

No.21

Gnod Ou Mini-Hydropower Plant			
General Sectional Drawing of Mini-Hydropower Plant			
Scale		Date	
Preparatory Survey for Mini-Hydropower Development Project in Lao PDR Japan International Cooperation Agency (JICA)			

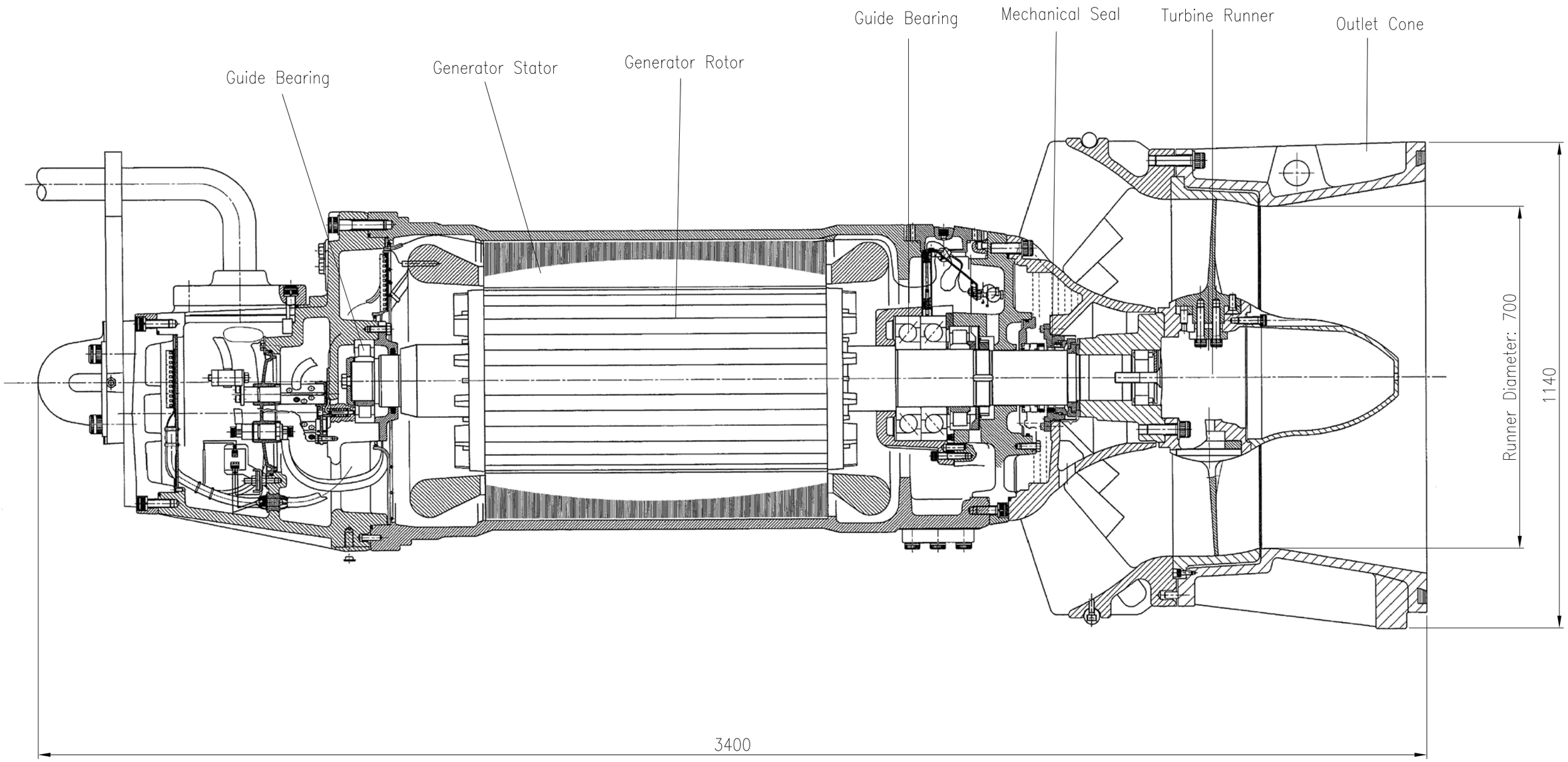

No.22

Gnod Ou Mini-Hydropower Plant			
Submergible Turbine Generator			
Scale	1:10	Date	
Preparatory Survey for Mini-Hydropower Development Project in Lao PDR Japan International Cooperation Agency (JICA)			

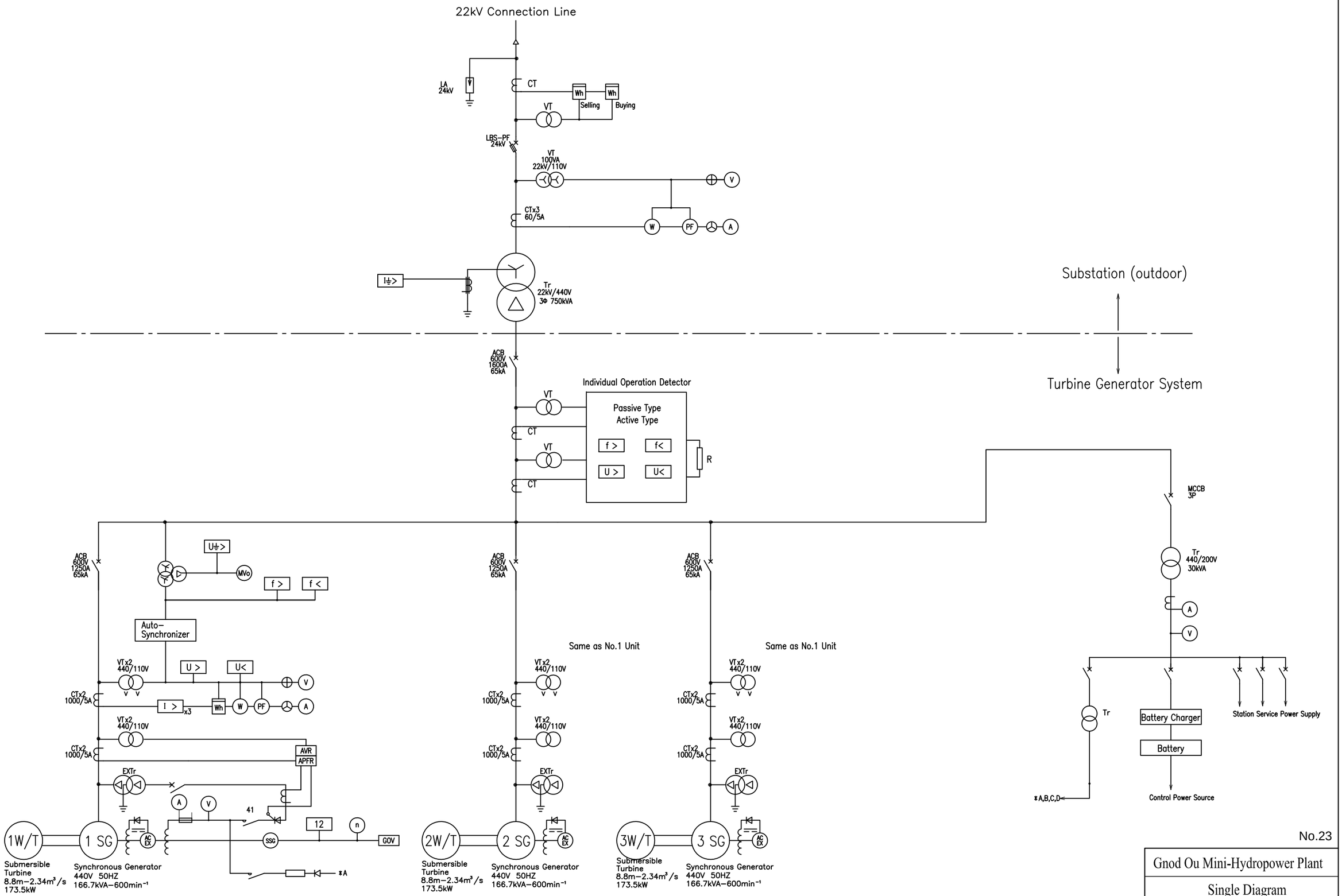

No.23

Gnod Ou Mini-Hydropower Plant		
Single Diagram		
Scale	none	Date

Preparatory Survey for
Mini-Hydropower Development Project
in Lao PDR
Japan International Cooperation Agency (JICA)

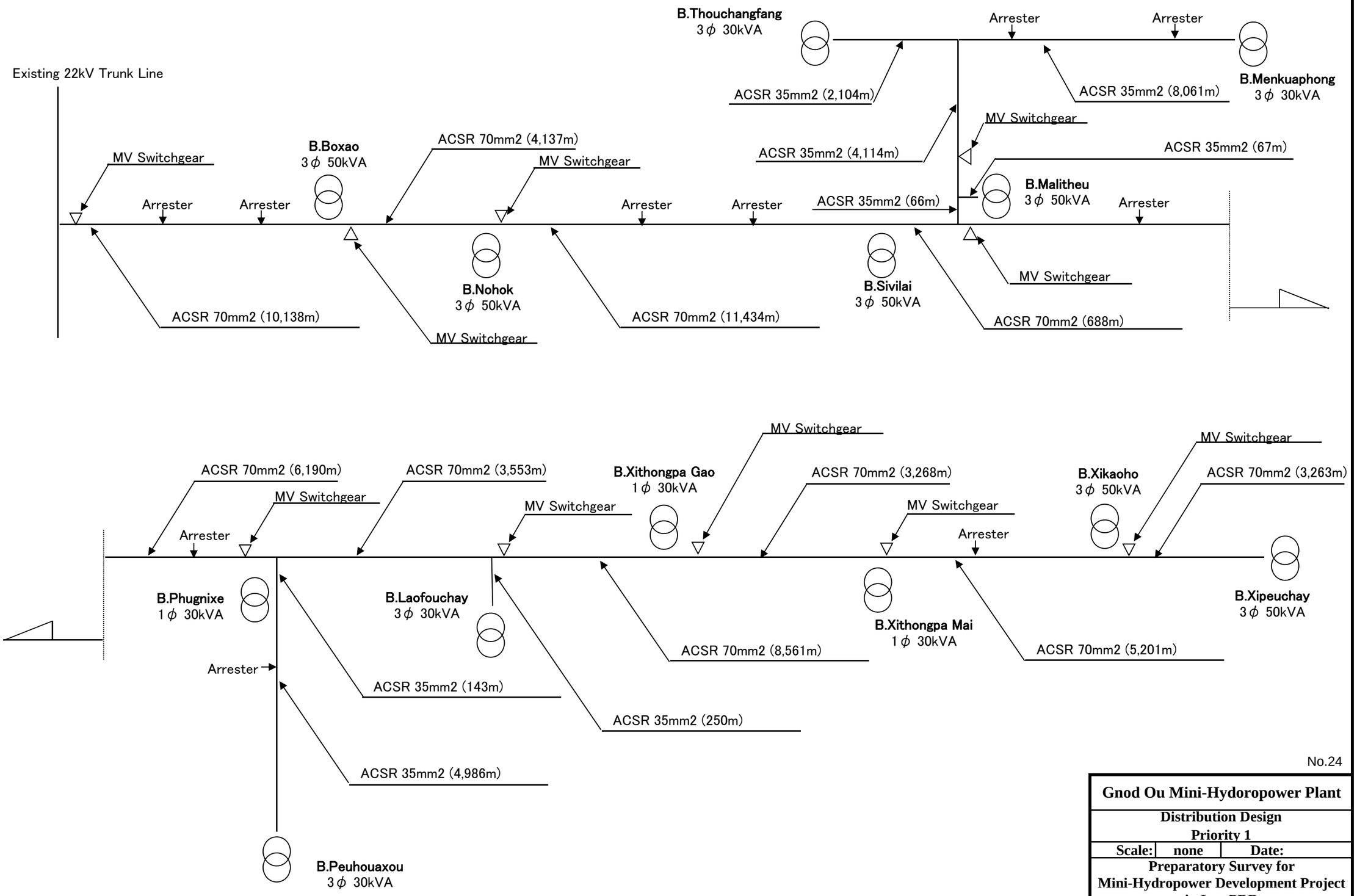

No.24

Gnod Ou Mini-Hydoropower Plant		
Distribution Design Priority 1		
Scale:	none	Date:
Preparatory Survey for Mini-Hydropower Development Project in Lao PDR		
Japan International Cooperation Agency (JICA)		

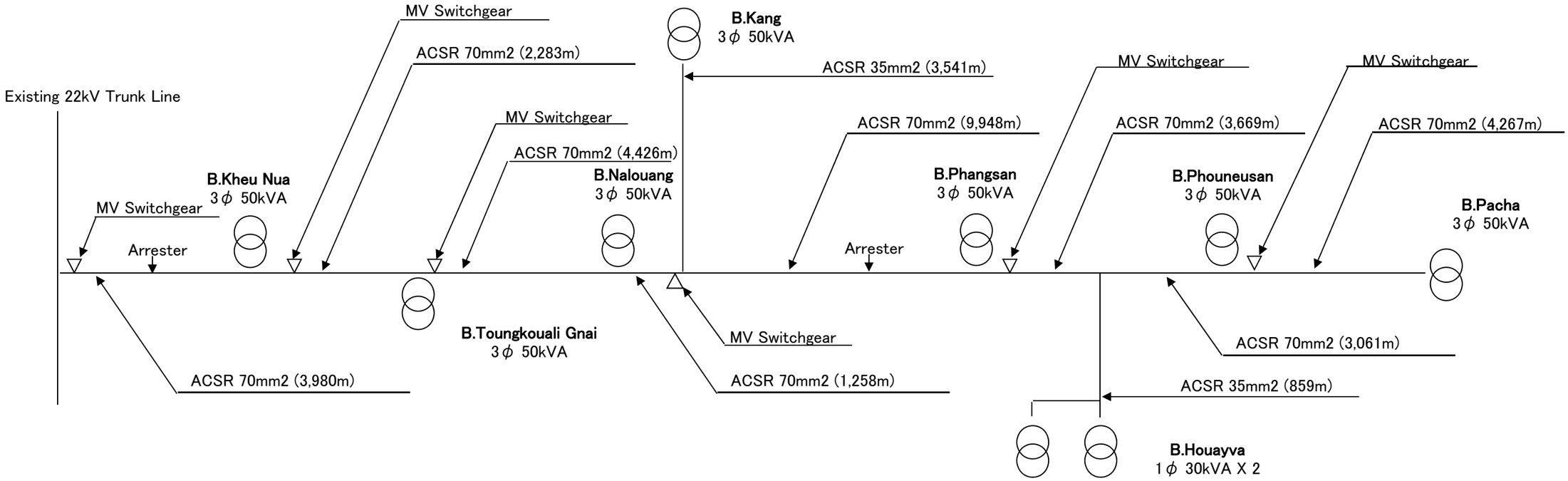

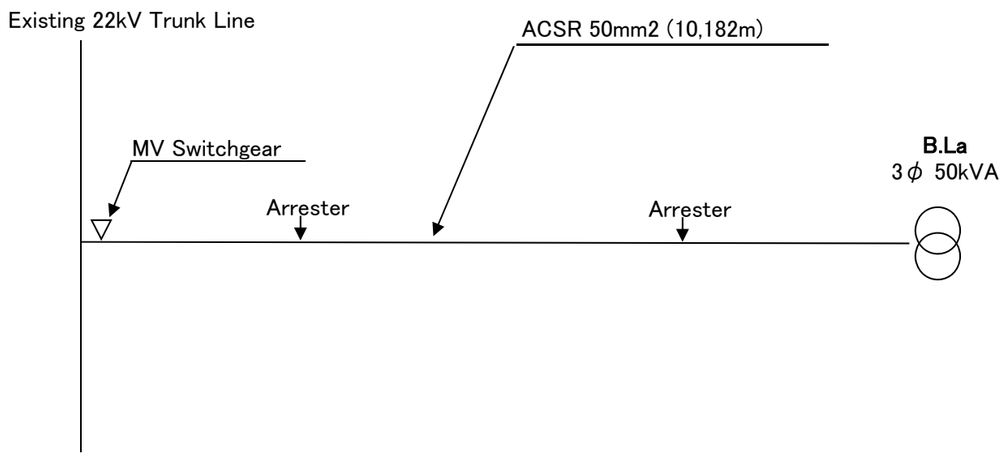

No.25

Gnod Ou Mini-Hydropower Plant			
Distribution Design Priority 2			
Scale		Date	
Preparatory Survey for Mini-Hydropower Development Project in Lao PDR Japan International Cooperation Agency (JICA)			

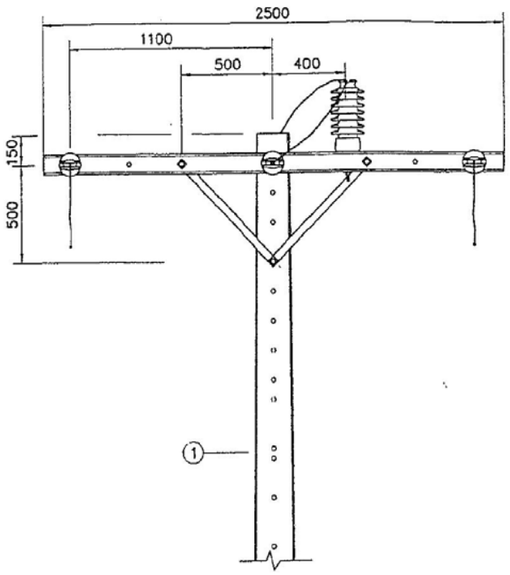

Front View

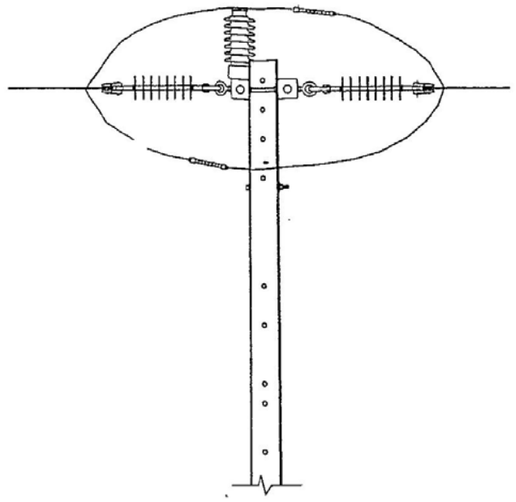

Side View

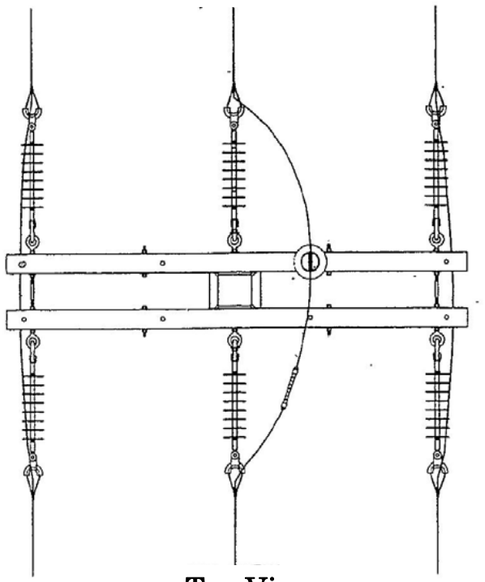

Top View

22kV Line Tension Pole

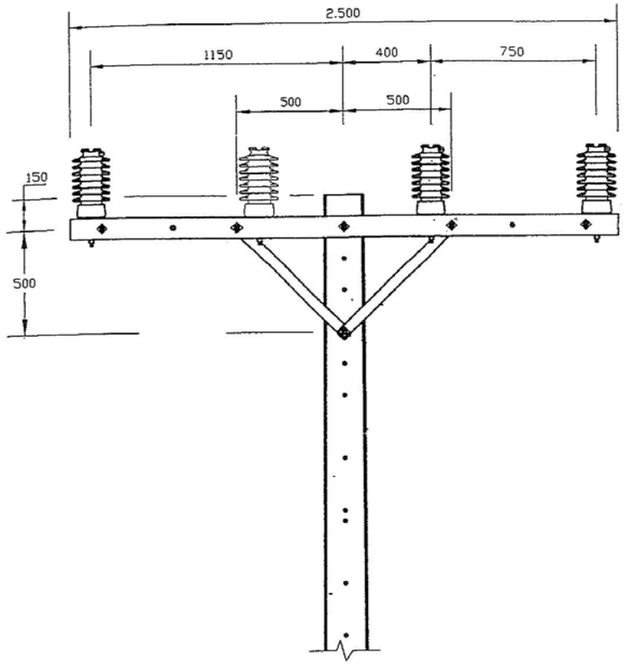

Front View

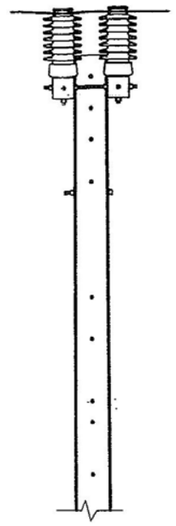

Side View

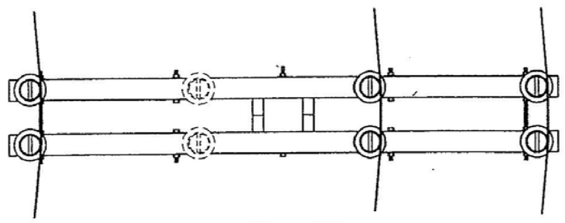

Top View

22kV Line Tangent or Angle Pole

No.26

Gnod Ou Mini-Hydoropower Plant		
Standard MV Single Pole Design		
Scale:	**none**	**Date:**
Preparatory Survey for Mini-Hydropower Development Project in Lao PDR Japan International Cooperation Agency (JICA)		

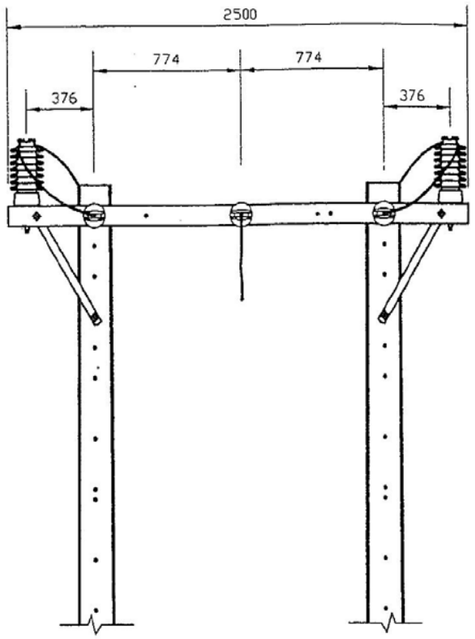

Front View

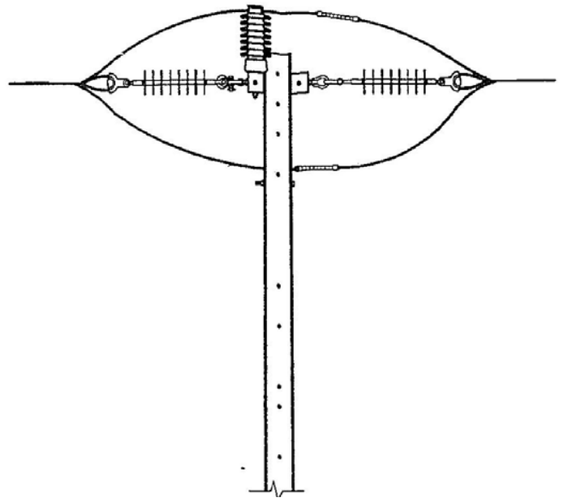

Side View

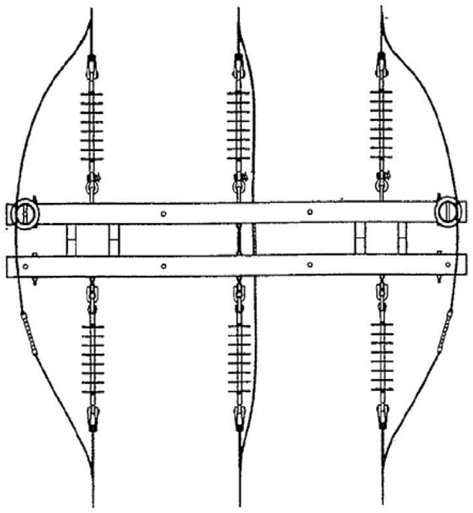

Top View

22kV Line Tension Pole

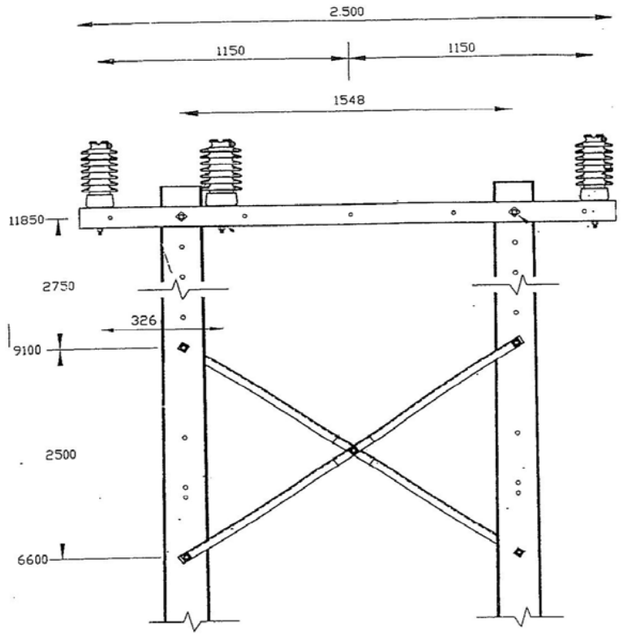

Front View

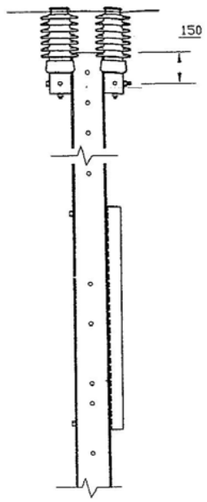

Side View

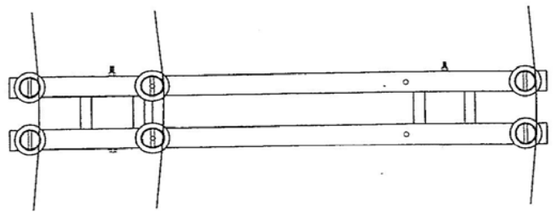

Top View

22kV Line Tangent or Angle Pole

No.27

Gnod Ou Mini-Hydoropower Plant		
Standard MV Double Pole Design		
Scale:	**none**	**Date:**
Preparatory Survey for Mini-Hydropower Development Project in Lao PDR Japan International Cooperation Agency (JICA)		

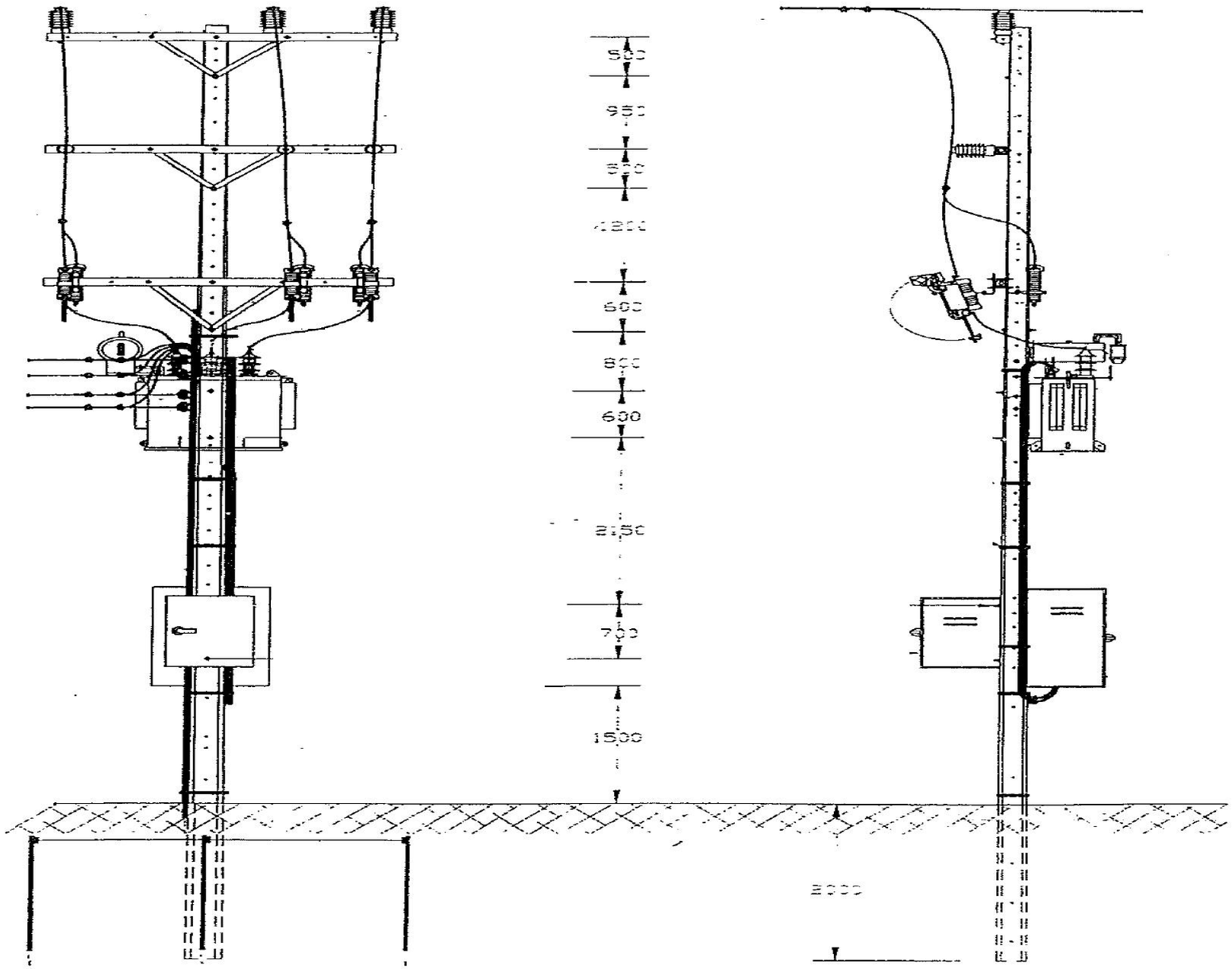

Front View

Side View

No.28

Gnod Ou Mini-Hydoropower Plant		
Standard MV Transformer Mounted Pole Design		
Scale:	**none**	**Date:**
Preparatory Survey for Mini-Hydropower Development Project in Lao PDR Japan International Cooperation Agency (JICA)		

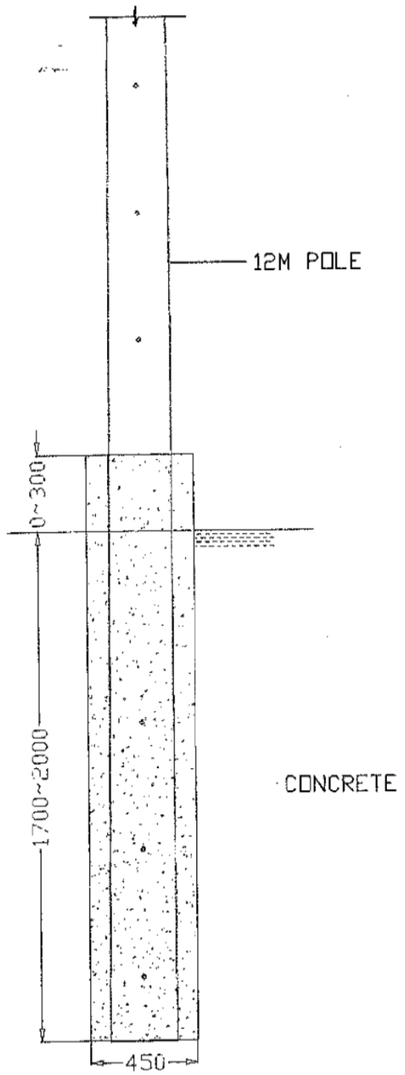

12M CONCRETE POLE FOUNDATION

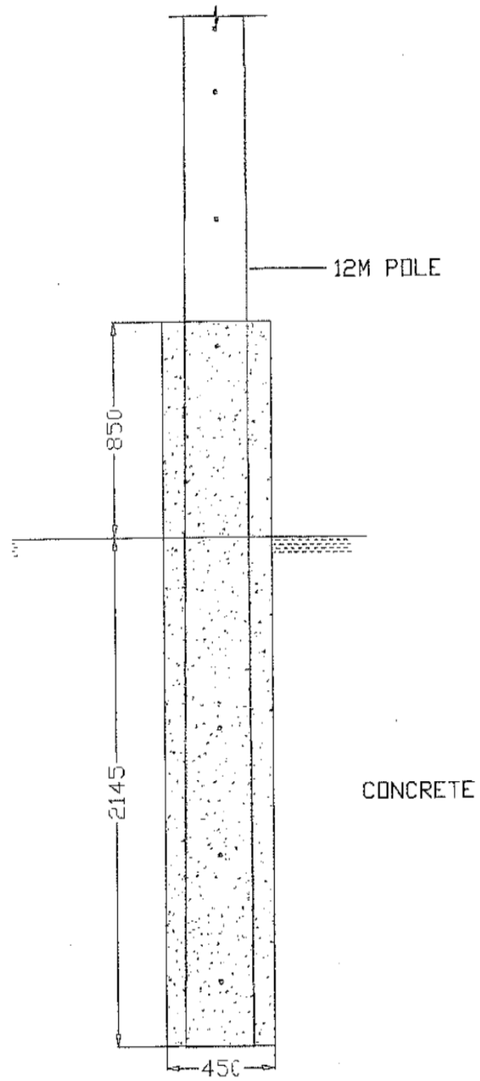

12M CONCRETE POLE FOUNDATION PROTECT FROM FLOOD AT POLE

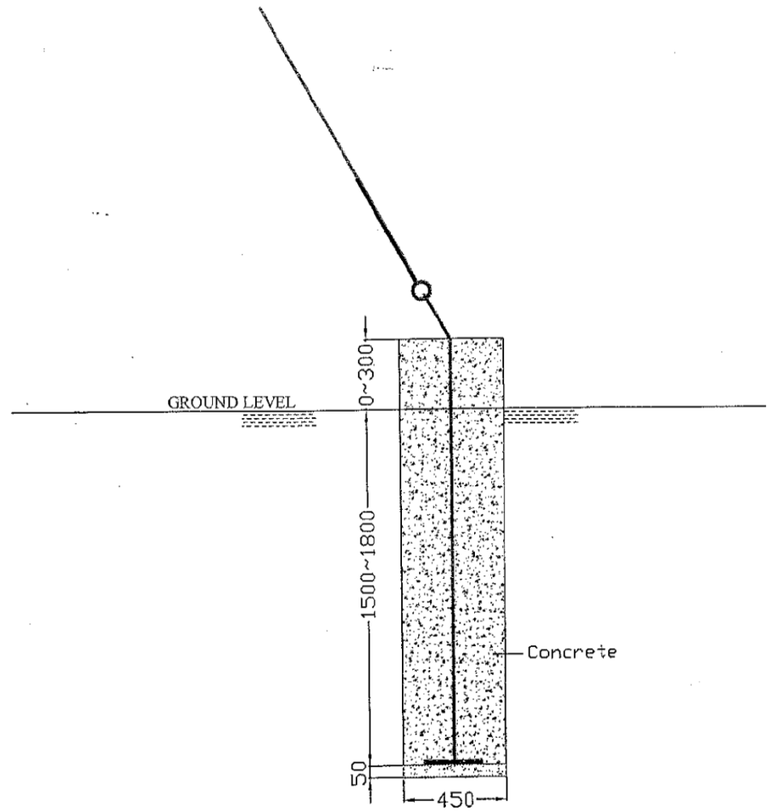

GUY WIRE FOUNDATION

No.29

Gnod Ou Mini-Hydoropower Plant		
Standard MV Pole Foundation Design		
Scale:	**none**	**Date:**
Preparatory Survey for Mini-Hydropower Development Project in Lao PDR Japan International Cooperation Agency (JICA)		

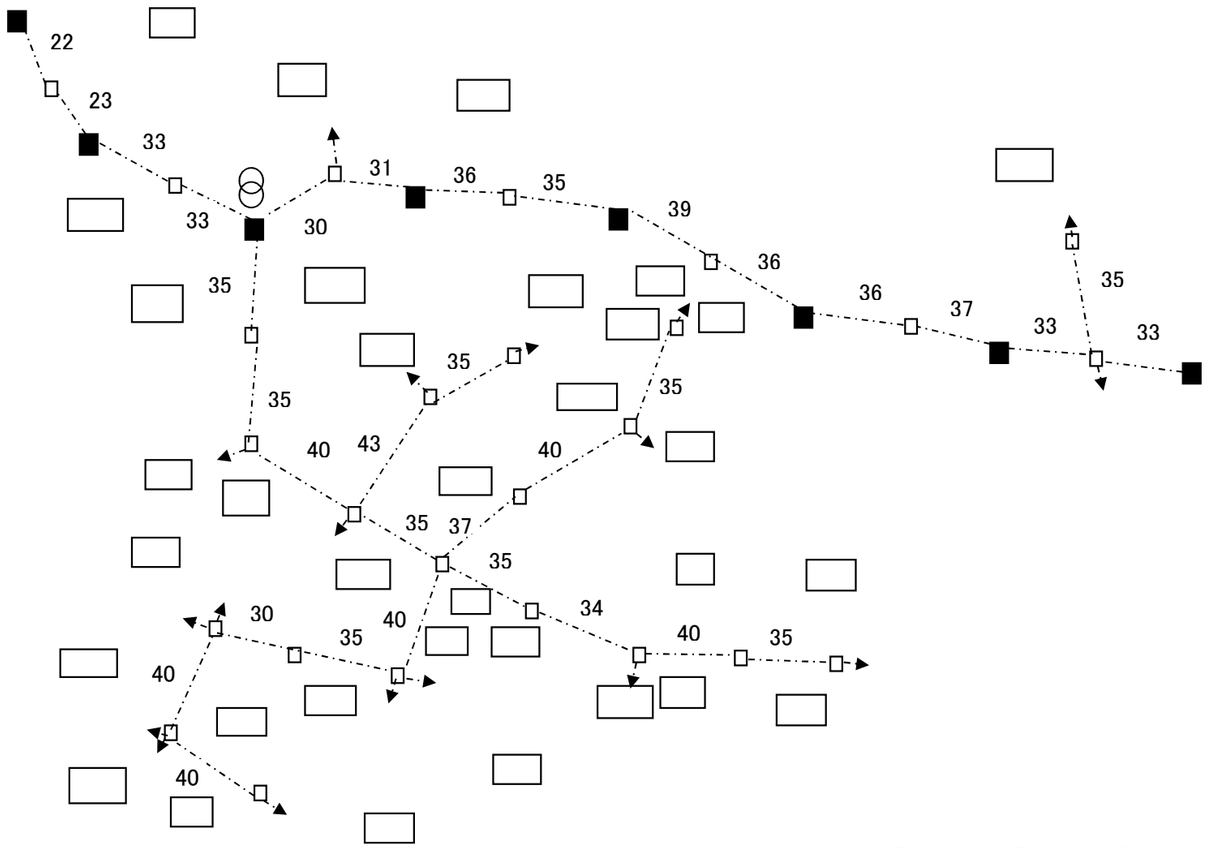

Power Line: PVC-AL 35mm2

Legend:

□	Utility Pole for LV
■	Utility Pole for MV
-·-·-▶	Guy Wire

No.30

Gnod Ou Mini-Hydoropower Plant

LV Distribution Design
Boxao

Scale:	none	Date:

Preparatory Survey for
Mini-Hydropower Development Project
in Lao PDR
Japan International Cooperation Agency (JICA)

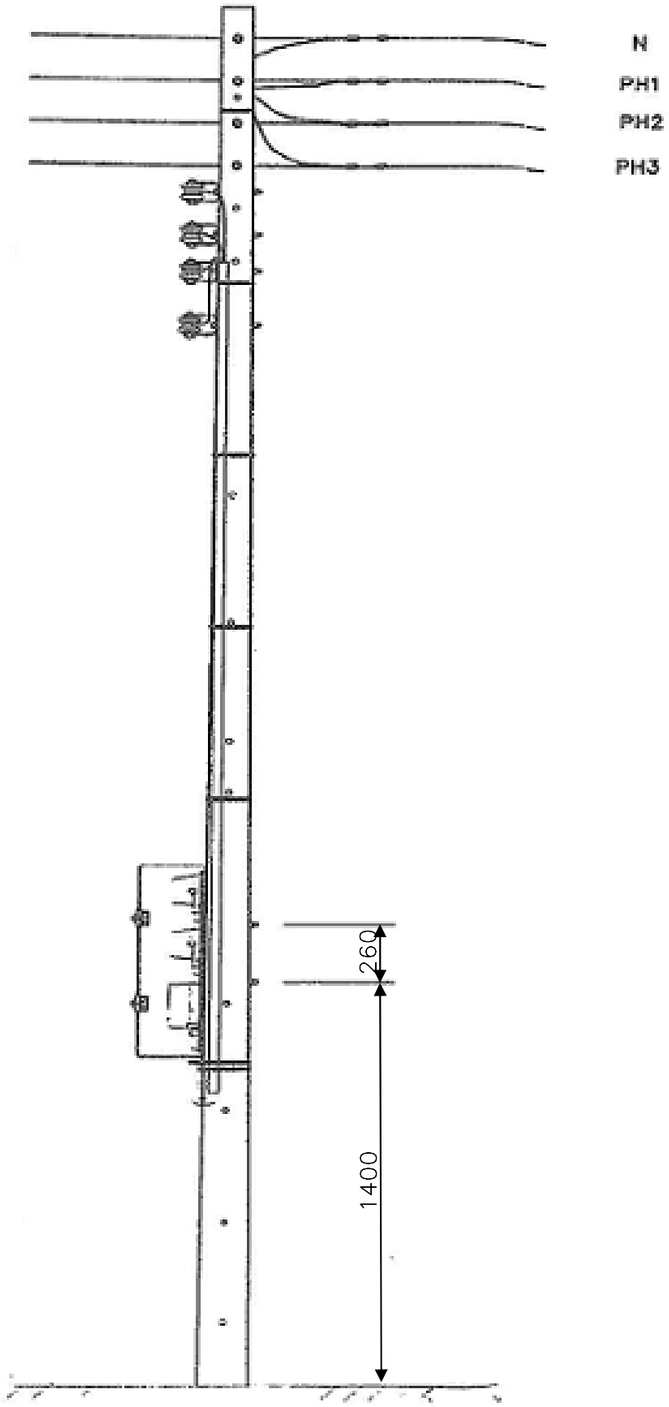

Front View

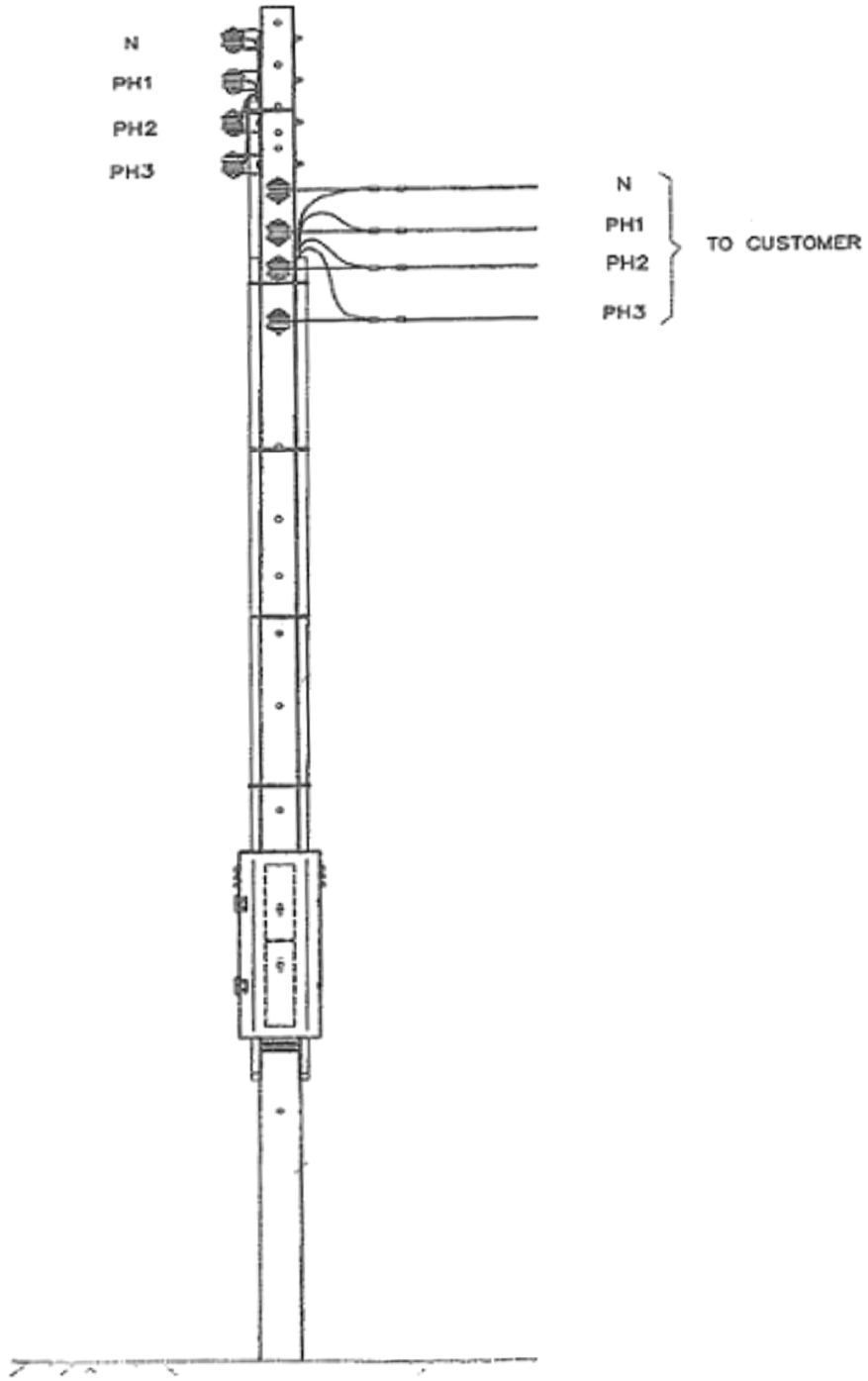

Side View

No.31

Gnod Ou Mini-Hydoropower Plant		
Standard LV pole design		
Scale:	**none**	**Date:**
Preparatory Survey for Mini-Hydropower Development Project in Lao PDR		
Japan International Cooperation Agency (JICA)		

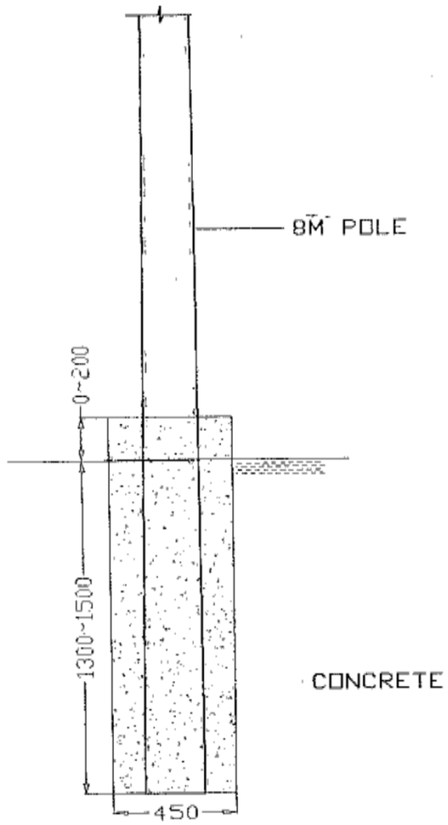

8M CONCRETE POLE FOUNDATION

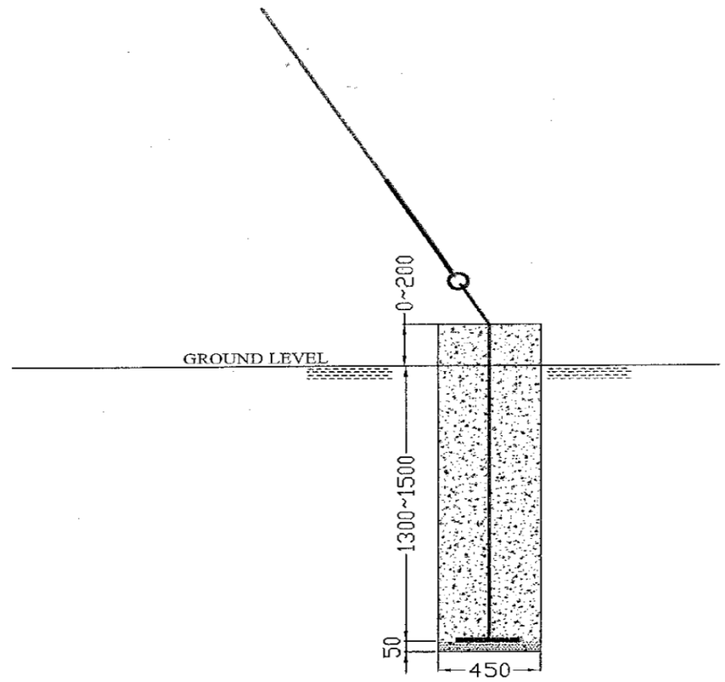

GUY WIRE FOUNDATION

No.32

Gnod Ou Mini-Hydoropower Plant		
Standard LV Pole Foundation Design		
Scale:	**none**	**Date:**
Preparatory Survey for Mini-Hydropower Development Project in Lao PDR Japan International Cooperation Agency (JICA)		