6. BR-27 LAMAR BRIDGE

ELEMENTS OF CURVE											
PI NO.	STATION	COORDINATES		Δ	R	T	Lc	E	e%	W	V(kph)
		NORTHING	EASTING								
PI-00	0+923.624	8999156.596	516080.795	NO HORIZONTAL CURVE							–
PI-01	0+938.873	8999169.541	516072.735	17°48'58"	97.289	15.249	30.252	1.188	*	–	–
PI-02	0+976.278	8999193.882	516044.011	64°59'48"	30.00	19.111	34.032	5.570	*	–	–
PI-03	1+077.406	8999295.479	516071.757	90°00'00"	20.00	20.000	31.416	8.284	*	–	–
PI-04	1+138.717	8999310.828	516139.184	90°00'00"	35.00	35.000	54.978	14.497	*	–	–
PI-05	1+158.695	8999277.065	516148.405	NO HORIZONTAL CURVE							–

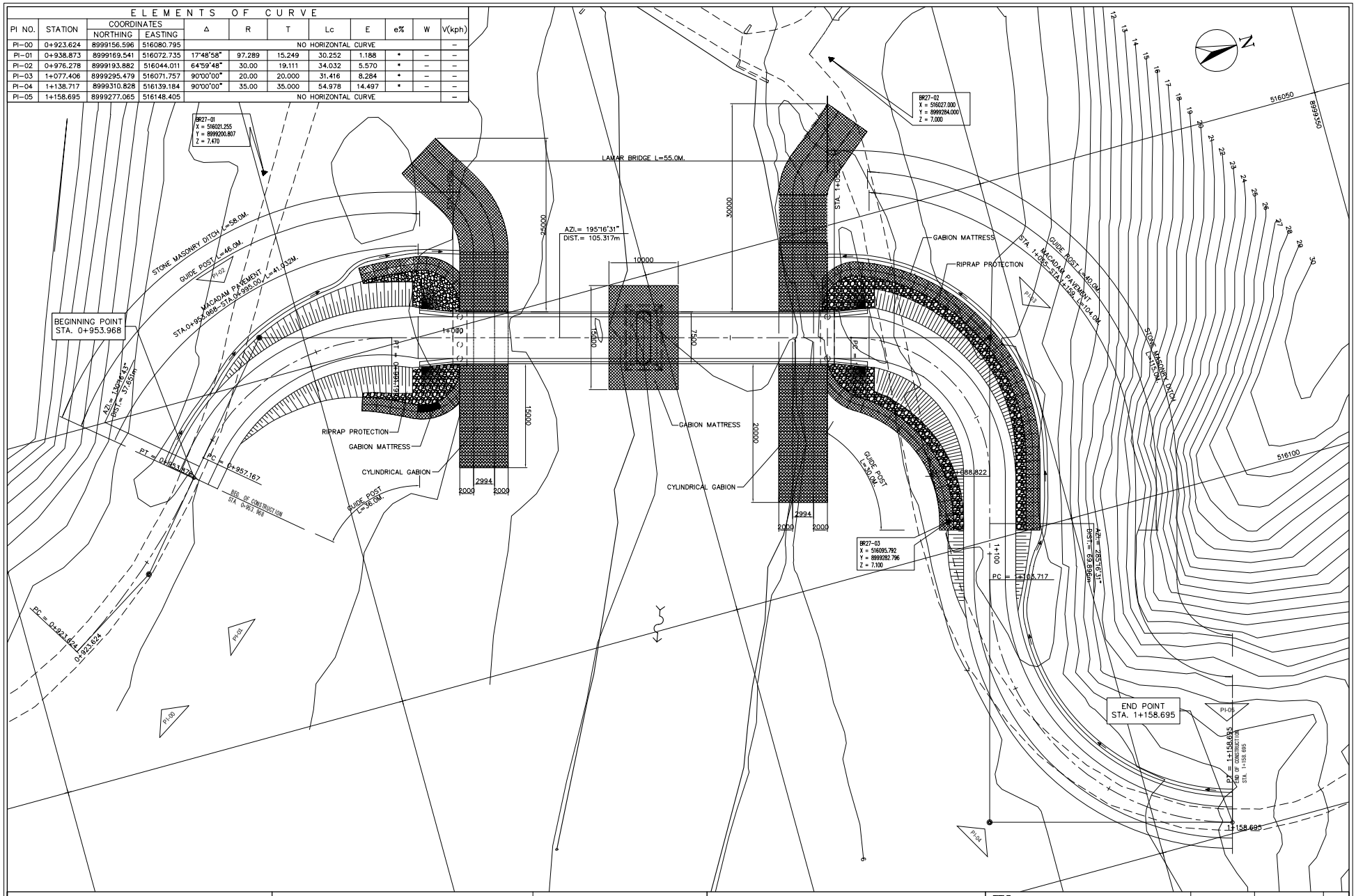

DIRECTORATE GENERAL OF HIGHWAY MINISTRY OF PUBLIC WORKS THE REPUBLIC OF INDONESIA	JICA JAPAN INTERNATIONAL COOPERATION AGENCY	KATAHIRA & ENGINEERS INTERNATIONAL	THE PREPARATORY SURVEY ON THE PROJECT FOR CONSTRUCTION OF BRIDGES IN THE PROVINCE OF NUSA TENGGARA BARAT, PHASE-3 IN THE REPUBLIC OF INDONESIA	TITLE : BR-27 LAMAR BRIDGE GENERAL SITE PLAN	SCALE : 1 : 500	DRAWING No: 6-1 Rev.

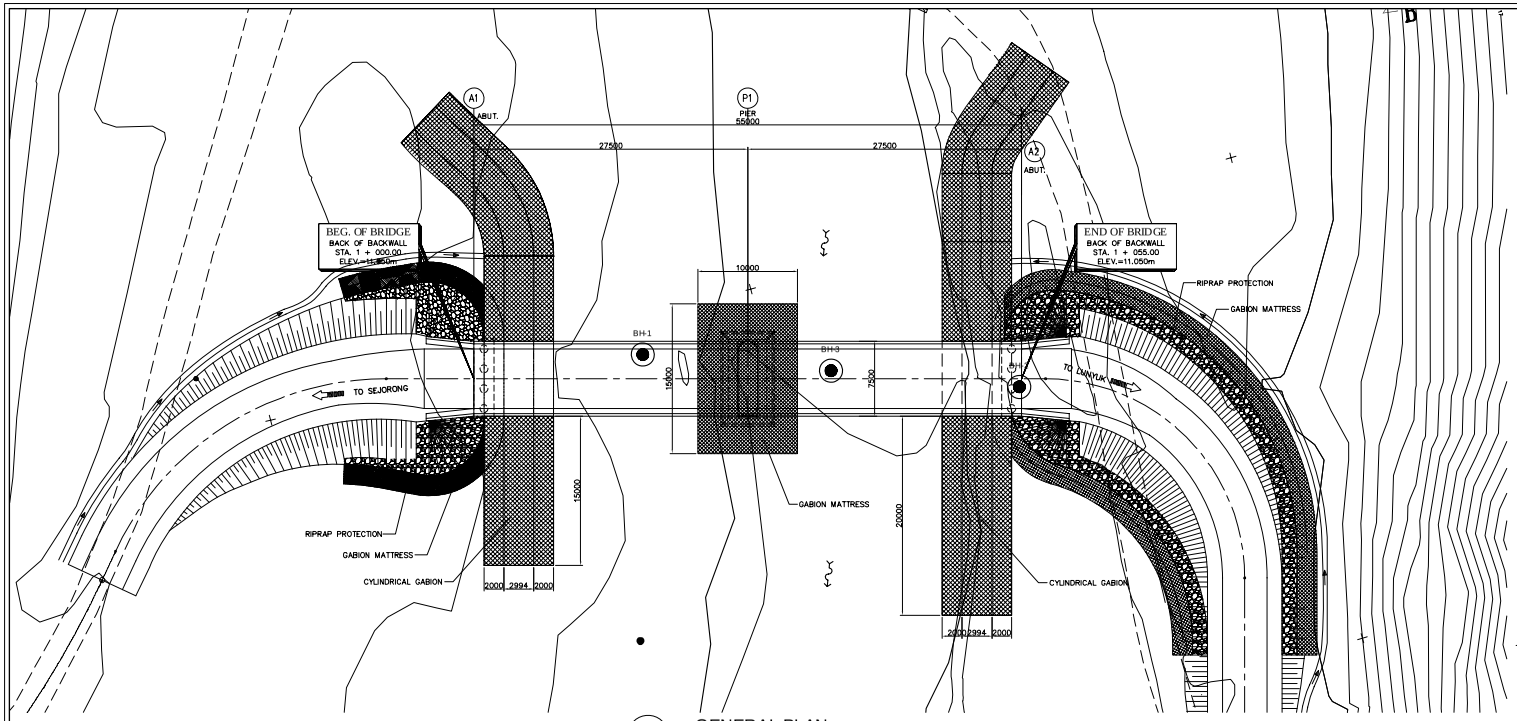

1 GENERAL PLAN
SCALE 1:500

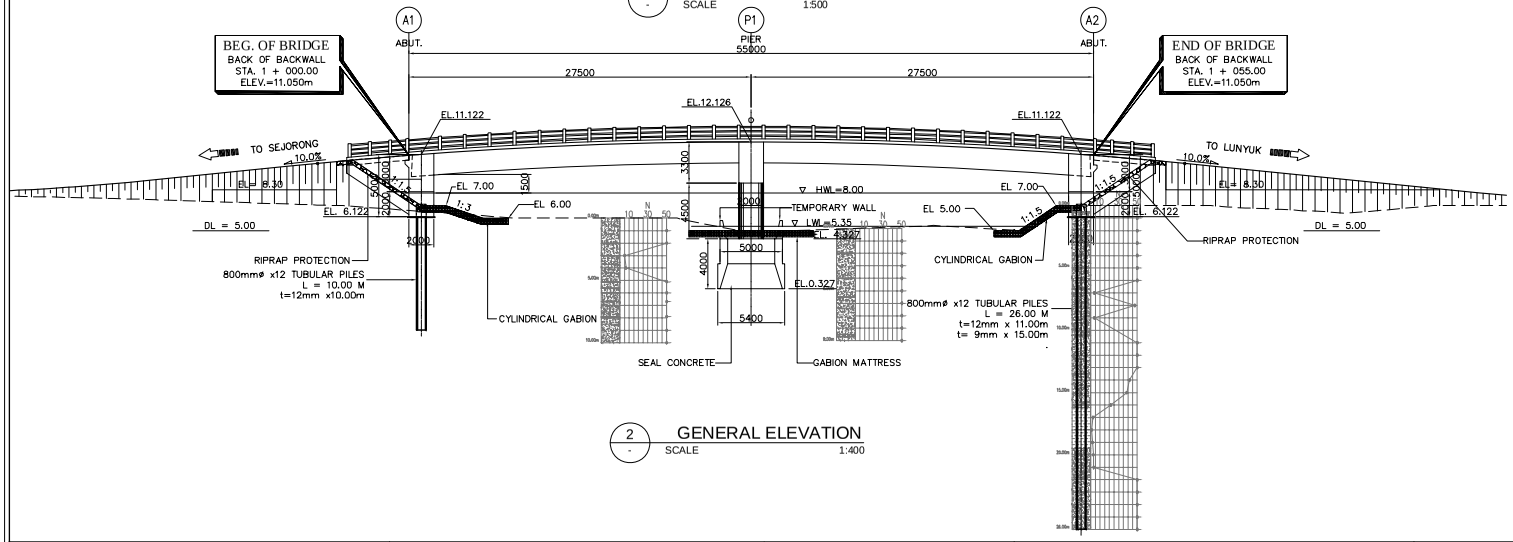

2 GENERAL ELEVATION
SCALE 1:400

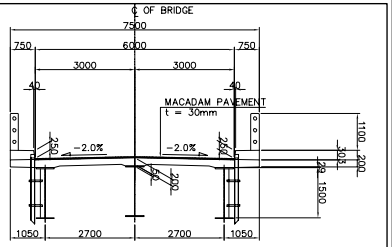

3 SECTION @ MIDSPAN
SCALE 1:150

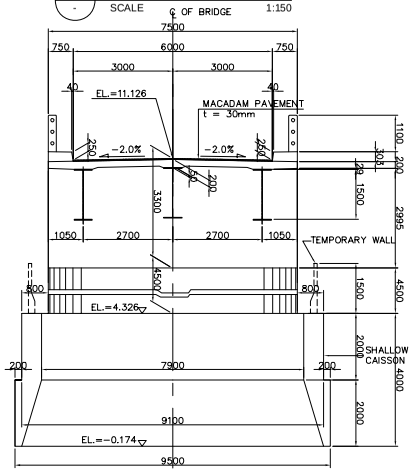

4 SECTION @ PIER
SCALE 1:150

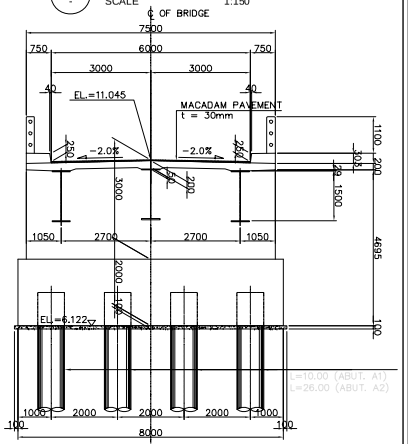

5 SECTION @ ABUTMENT
SCALE 1:150

DIRECTORATE GENERAL OF HIGHWAY MINISTRY OF PUBLIC WORKS THE REPUBLIC OF INDONESIA	JICA JAPAN INTERNATIONAL COOPERATION AGENCY	KATAHIRA & ENGINEERS INTERNATIONAL	THE PREPARATORY SURVEY ON THE PROJECT FOR CONSTRUCTION OF BRIDGES IN THE PROVINCE OF NUSA TENGGARA BARAT, PHASE-3 IN THE REPUBLIC OF INDONESIA	TITLE : BR-27 LAMAR BRIDGE GEN. PLAN, ELEVATION & SECTIONS	SCALE : AS SHOWN	DRAWING No: 6-2 Rev.

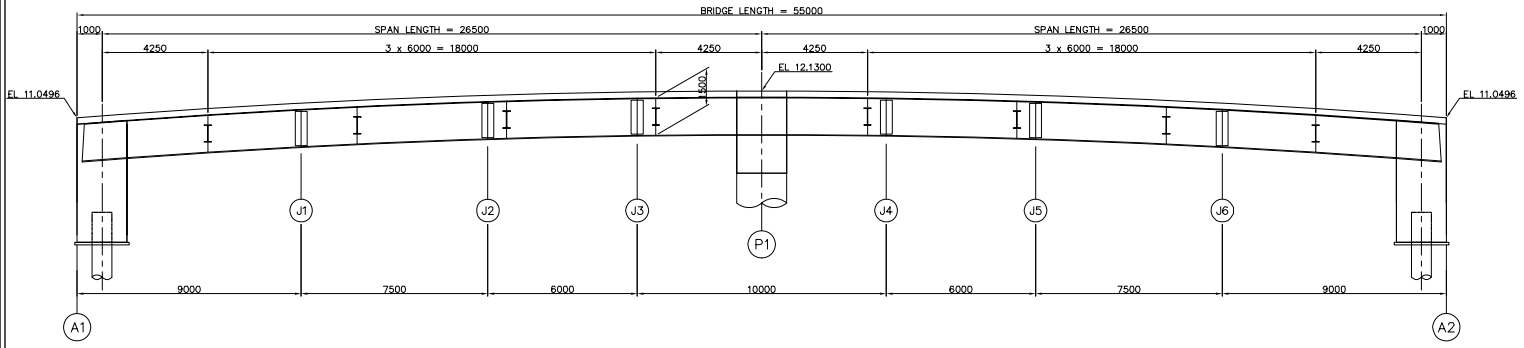

1 ELEVATION
SCALE 1:100

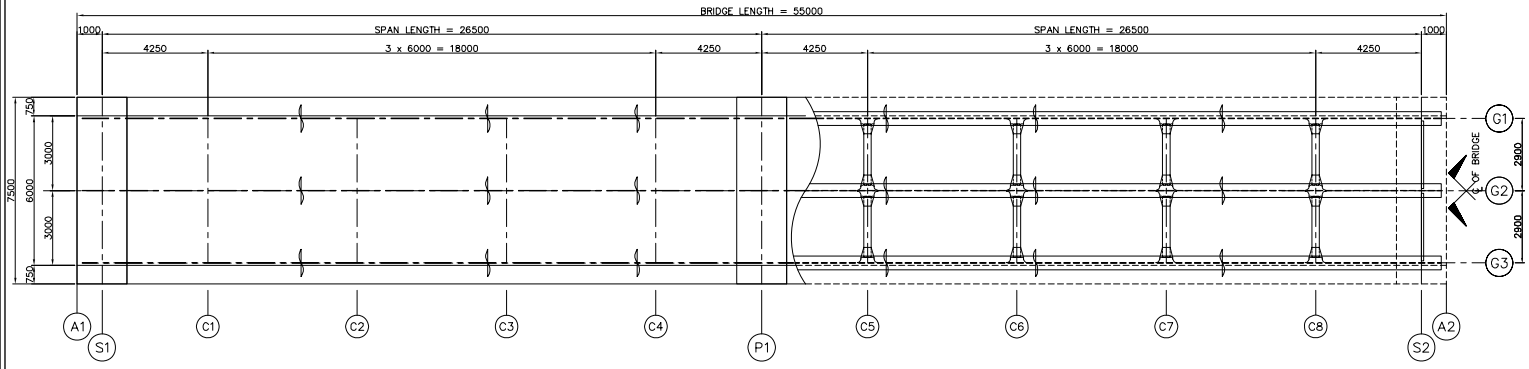

2 PLAN
SCALE 1:100

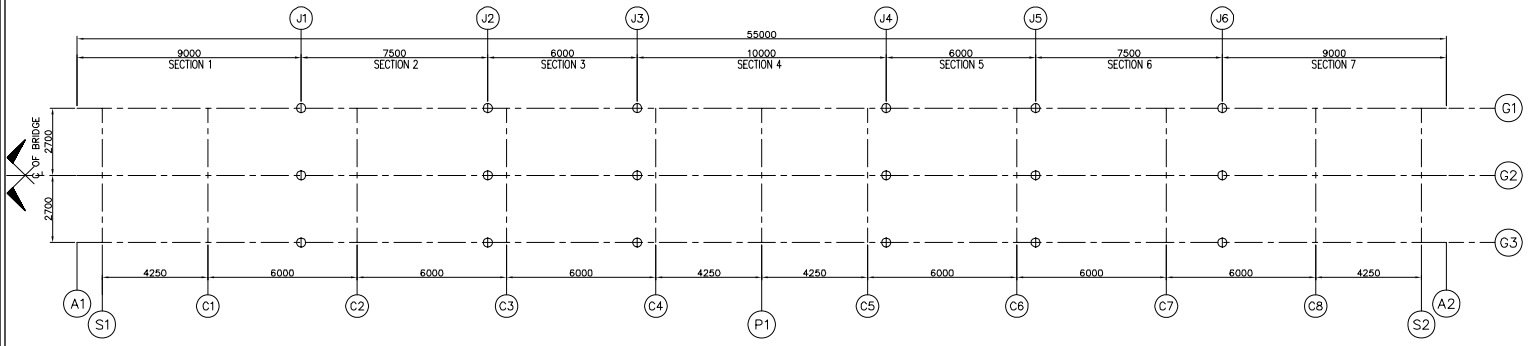

3 KEY PLAN
SCALE 1:100

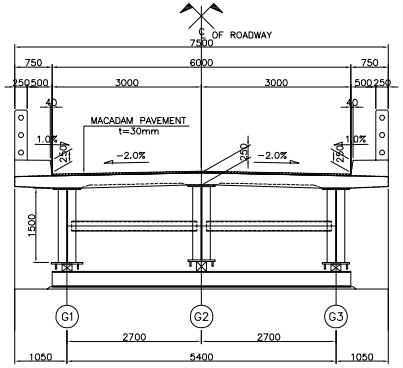

4 SECTION @ S1, P1 & S2
SCALE 1:50

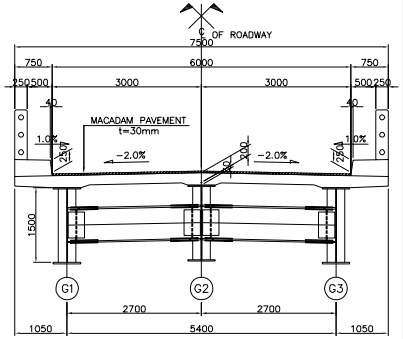

5 SECTION @ C1~C8
SCALE 1:50

DIRECTORATE GENERAL OF HIGHWAY MINISTRY OF PUBLIC WORKS THE REPUBLIC OF INDONESIA	JICA JAPAN INTERNATIONAL COOPERATION AGENCY	KATAHIRA & ENGINEERS INTERNATIONAL	THE PREPARATORY SURVEY ON THE PROJECT FOR CONSTRUCTION OF BRIDGES IN THE PROVINCE OF NUSA TENGGARA BARAT, PHASE-3 IN THE REPUBLIC OF INDONESIA	TITLE : BR-27 LAMAR BRIDGE GEN. DIM. OF SUPERSTRUCTURE	SCALE : AS SHOWN	DRAWING No: 6-3 Rev.

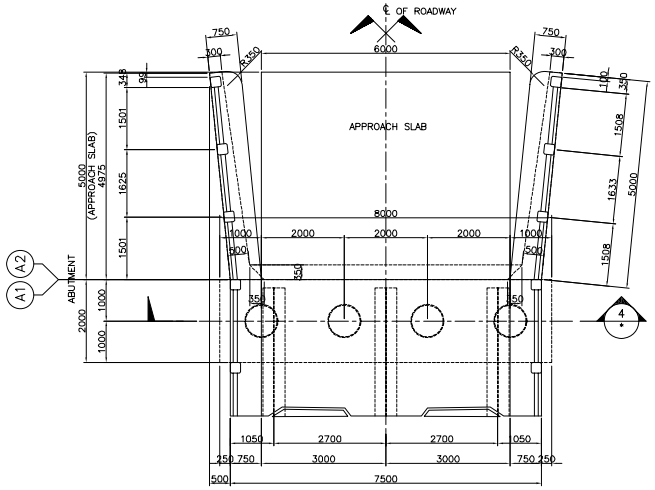

1 PLAN
SCALE 1:60

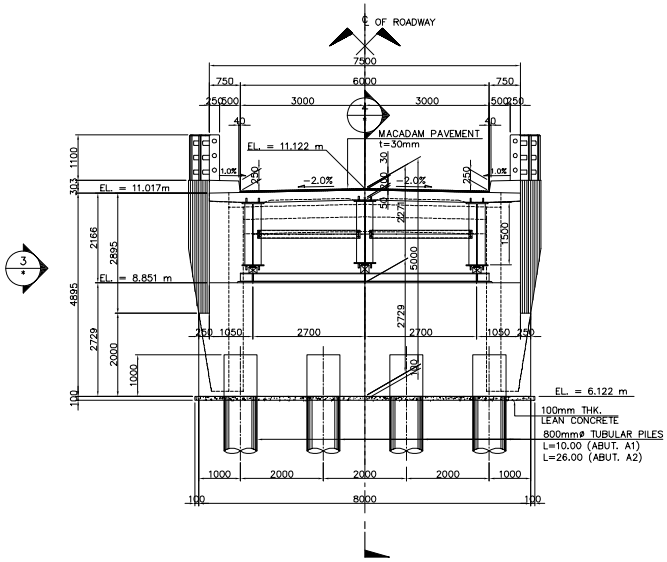

2 ELEVATION
SCALE 1:60

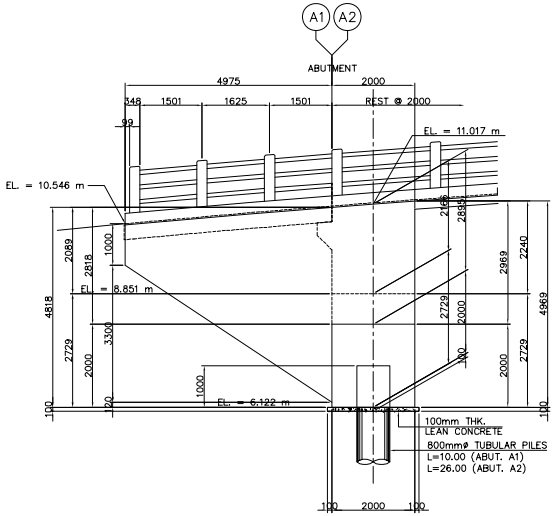

3 ELEVATION
SCALE 1:60

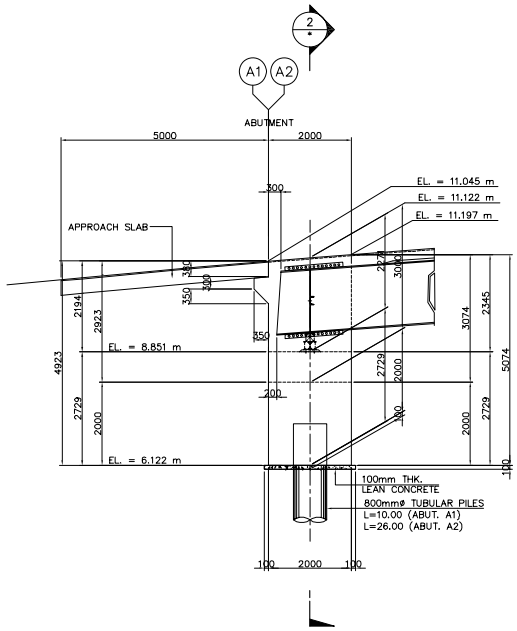

4 ELEVATION
SCALE 1:60

DIRECTORATE GENERAL OF HIGHWAY MINISTRY OF PUBLIC WORKS THE REPUBLIC OF INDONESIA	JICA JAPAN INTERNATIONAL COOPERATION AGENCY	KATAHIRA & ENGINEERS INTERNATIONAL	THE PREPARATORY SURVEY ON THE PROJECT FOR CONSTRUCTION OF BRIDGES IN THE PROVINCE OF NUSA TENGGARA BARAT, PHASE-3 IN THE REPUBLIC OF INDONESIA	TITLE : BR-27 LAMAR BRIDGE SUBSTRUCTURE STRUCTURAL DIMENSION (ABUTMENT A1 & A2)	SCALE : AS SHOWN	DRAWING No: 6-4 Rev.

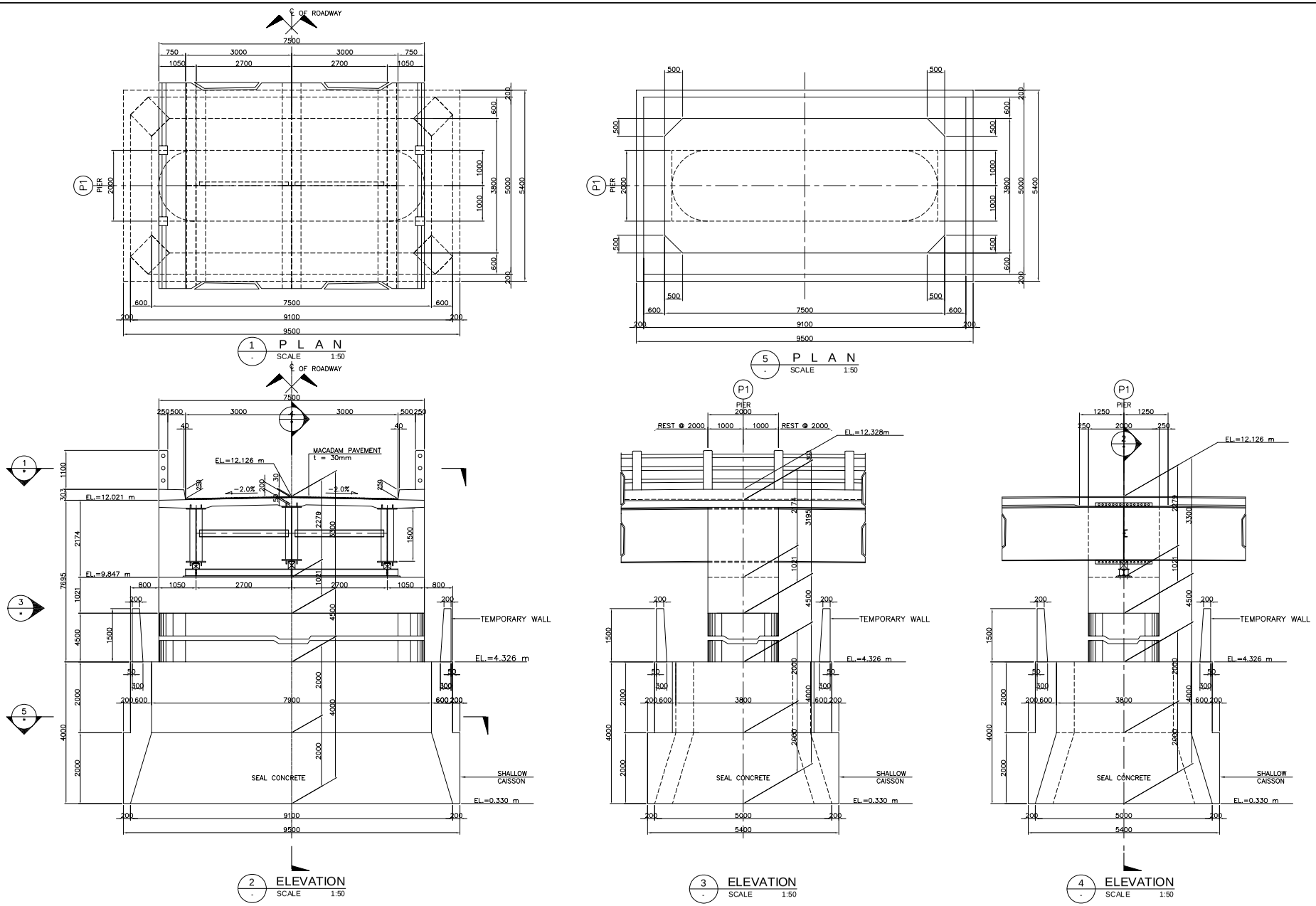

DIRECTORATE GENERAL OF HIGHWAY MINISTRY OF PUBLIC WORKS THE REPUBLIC OF INDONESIA	JICA JAPAN INTERNATIONAL COOPERATION AGENCY	KATAHIRA & ENGINEERS INTERNATIONAL	THE PREPARATORY SURVEY ON THE PROJECT FOR CONSTRUCTION OF BRIDGES IN THE PROVINCE OF NUSA TENGGARA BARAT, PHASE-3 IN THE REPUBLIC OF INDONESIA	TITLE : BR-27 LAMAR BRIDGE SUBSTRUCTURE STRUCTURAL DIMENSION (PIER P1)	SCALE : AS SHOWN	DRAWING No: 6-5 Rev.

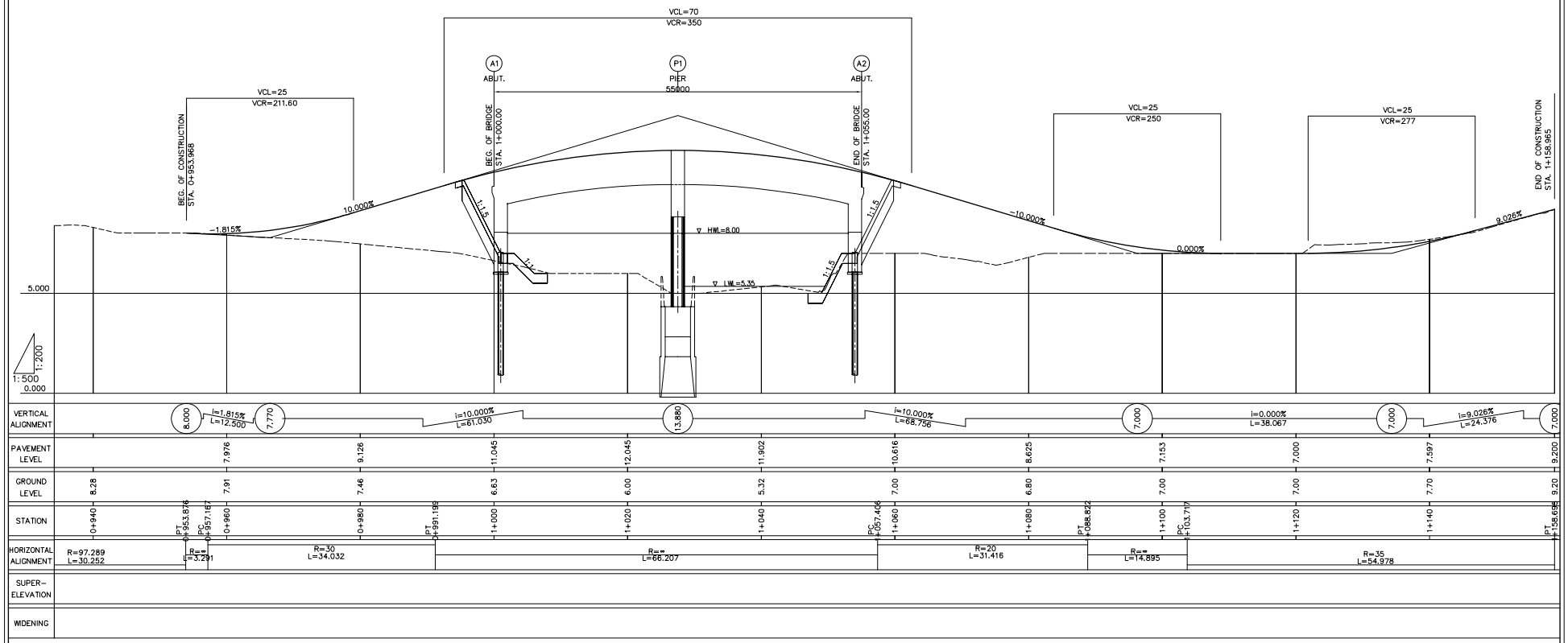

DIRECTORATE GENERAL OF HIGHWAY MINISTRY OF PUBLIC WORKS THE REPUBLIC OF INDONESIA	JICA JAPAN INTERNATIONAL COOPERATION AGENCY	KATAHIRA & ENGINEERS INTERNATIONAL	THE PREPARATORY SURVEY ON THE PROJECT FOR CONSTRUCTION OF BRIDGES IN THE PROVINCE OF NUSA TENGGARA BARAT, PHASE-3 IN THE REPUBLIC OF INDONESIA	TITLE: BR-27 LAMAR BRIDGE APPROACH ROAD PROFILE	SCALE: H = 1:500 V = 1:200	DRAWING No: 6-6	Rev.

NO.0+995.0000
GH=6.98
PH=10.62

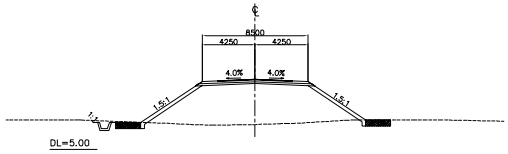

NO.0+980.0000
GH=7.47
PH=9.13

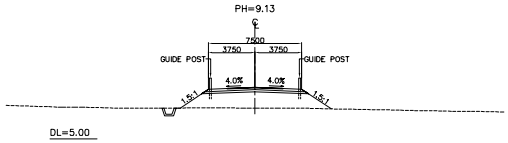

NO.0+960.0000
GH=7.91
PH=7.98

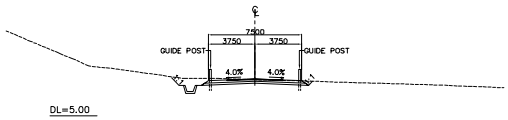

NO.0+953.9680
GH=8.00
PH=7.99

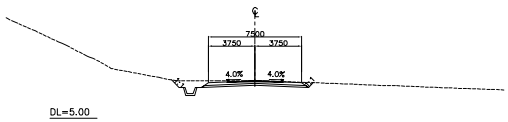

NO.1+100.0000
GH=7.00
PH=7.15

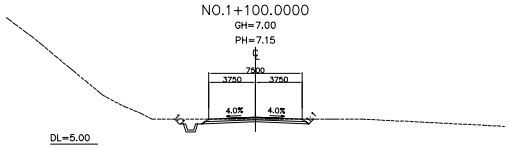

NO.1+080.0000
GH=6.79
PH=8.63

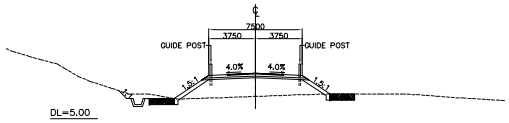

NO.1+060.0000
GH=7.00
PH=10.62

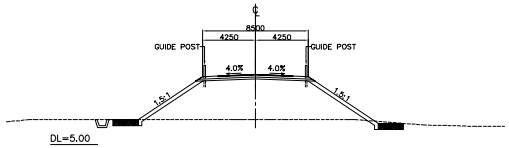

NO.1+158.695
GH=9.20
PH=9.200

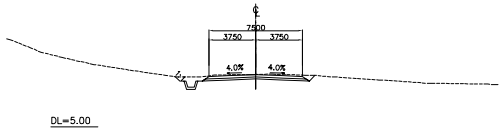

NO.1+140.0000
GH=7.69
PH=7.597

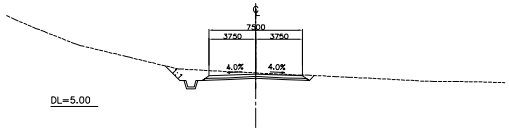

NO.1+120.0000
GH=7.00
PH=7.000

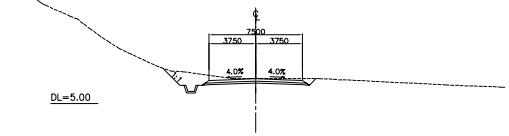

DIRECTORATE GENERAL OF HIGHWAY MINISTRY OF PUBLIC WORKS THE REPUBLIC OF INDONESIA	JICA JAPAN INTERNATIONAL COOPERATION AGENCY	KATAHIRA & ENGINEERS INTERNATIONAL	THE PREPARATORY SURVEY ON THE PROJECT FOR CONSTRUCTION OF BRIDGES IN THE PROVINCE OF NUSA TENGGARA BARAT, PHASE-3 IN THE REPUBLIC OF INDONESIA	TITLE : BR-27 LAMAR BRIDGE APPROACH ROAD CROSS SECTIONS	SCALE : 1:400	DRAWING No: 6-7 Rev.

7. BR-32 PETAIN III BRIDGE

ELEMENTS OF CURVE											
PI NO.	STATION	COORDINATES		Δ	R	T	Lc	E	e%	W	V(kph)
		NORTHING	EASTING								
PI-00	0+918.400	9002510.764	519091.445	NO HORIZONTAL CURVE							–
PI-01	0+988.902	9002520.493	519161.273	10°21'04"	150.00	13.587	27.099	0.614	*	–	–
PI-02	1+046.324	9002538.531	519215.866	18°07'54"	100.00	15.956	31.646	1.265	*	–	–
PI-03	1+122.237	9002583.754	519277.171	NO HORIZONTAL CURVE							–

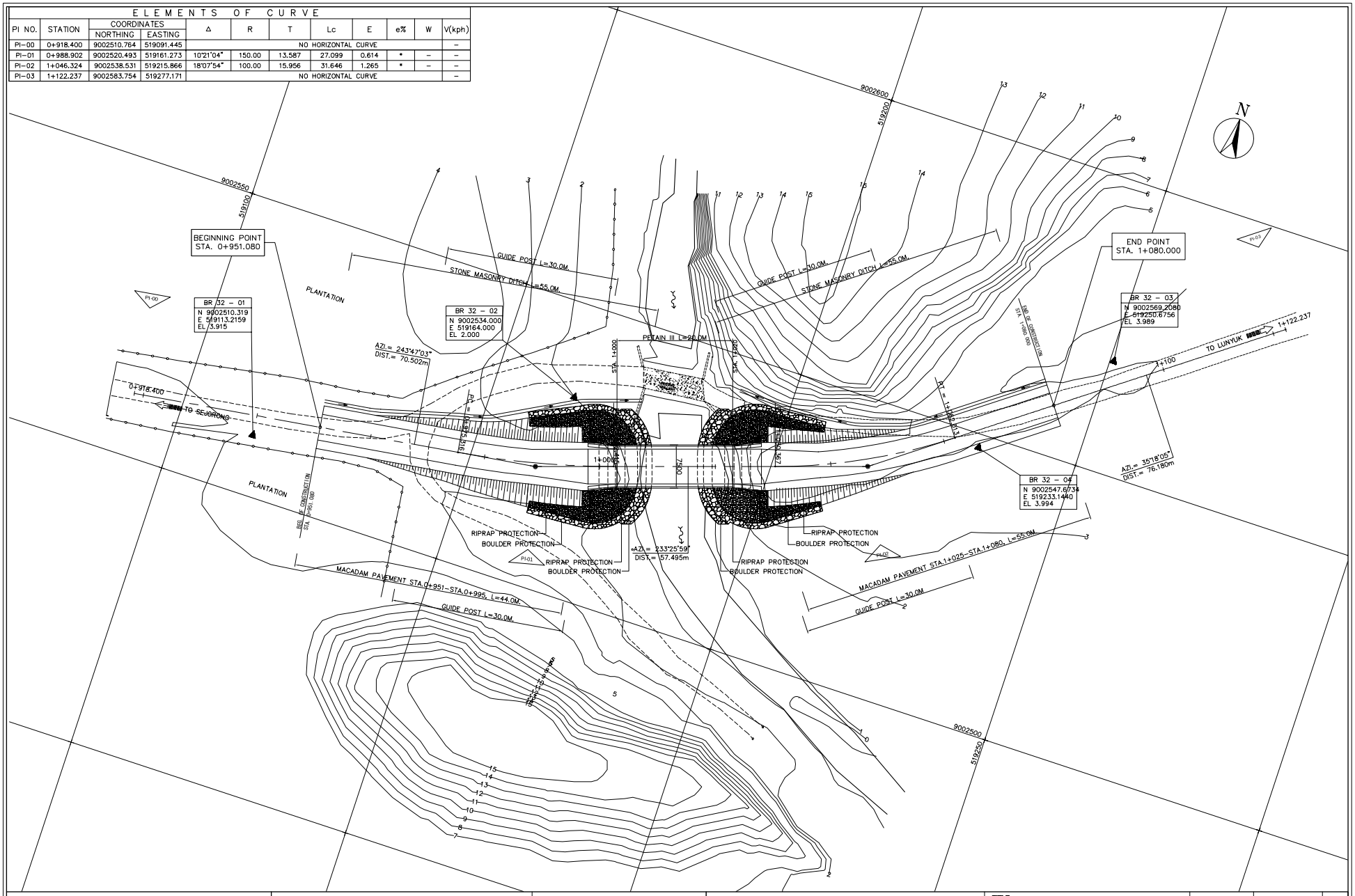

DIRECTORATE GENERAL OF HIGHWAY MINISTRY OF PUBLIC WORKS THE REPUBLIC OF INDONESIA	JICA JAPAN INTERNATIONAL COOPERATION AGENCY	KATAHIRA & ENGINEERS INTERNATIONAL	THE PREPARATORY SURVEY ON THE PROJECT FOR CONSTRUCTION OF BRIDGES IN THE PROVINCE OF NUSA TENGGARA BARAT, PHASE-3 IN THE REPUBLIC OF INDONESIA	TITLE: BR-32 PETAIN III BRIDGE GENERAL SITE PLAN	SCALE: 1:600	DRAWING No: 7-1 Rev.

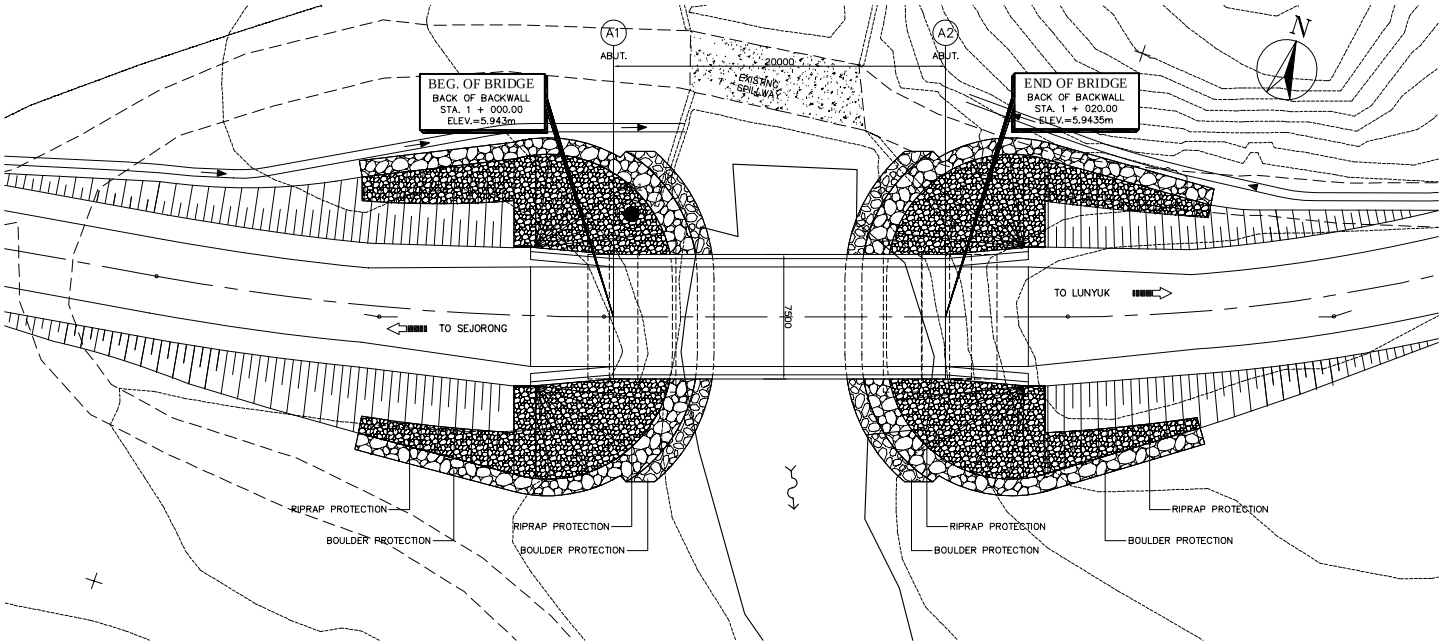

A GENERAL PLAN
SCALE 1:300

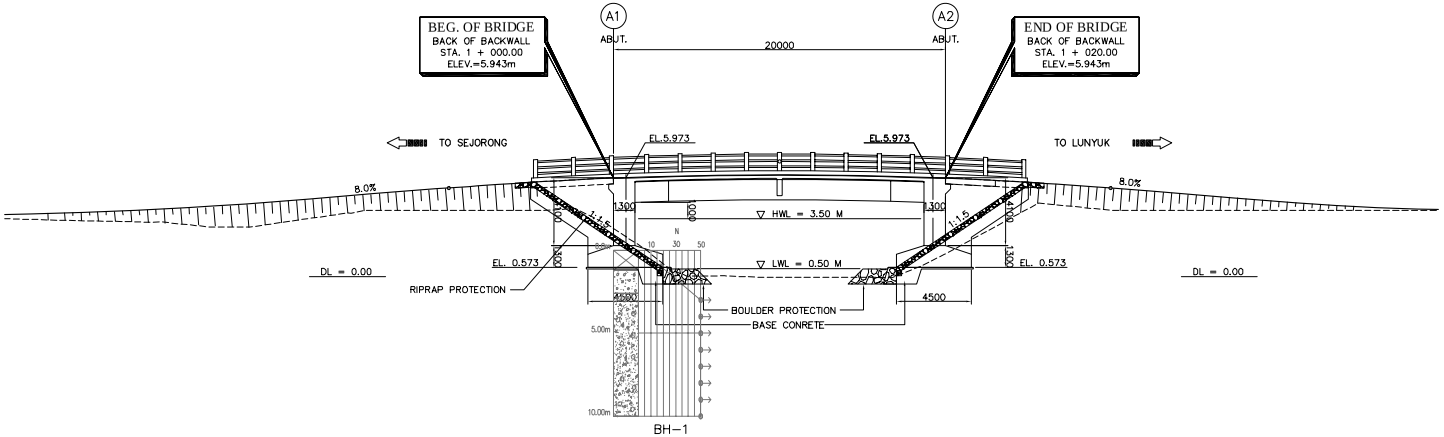

B GENERAL ELEVATION
SCALE 1:300

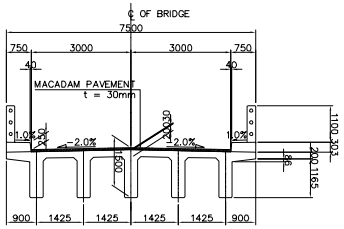

1 SECTION @ MIDSPAN
SCALE 1:150

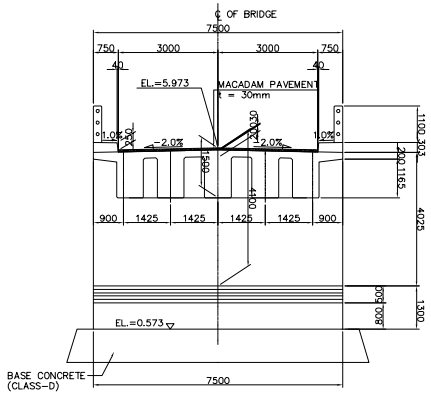

2 SECTION @ ABUTMENT
SCALE 1:150

NOTE:
The base concrete thickness shall be adjusted with the actual depth of the hard soil when excavated.

DIRECTORATE GENERAL OF HIGHWAY MINISTRY OF PUBLIC WORKS THE REPUBLIC OF INDONESIA	JICA JAPAN INTERNATIONAL COOPERATION AGENCY	KATAHIRA & ENGINEERS INTERNATIONAL	THE PREPARATORY SURVEY ON THE PROJECT FOR CONSTRUCTION OF BRIDGES IN THE PROVINCE OF NUSA TENGGARA BARAT, PHASE-3 IN THE REPUBLIC OF INDONESIA	TITLE: BR-32 PETAIN III BRIDGE GEN. PLAN, ELEVATION & SECTIONS	SCALE: AS SHOWN	DRAWING No: 7-2 Rev.

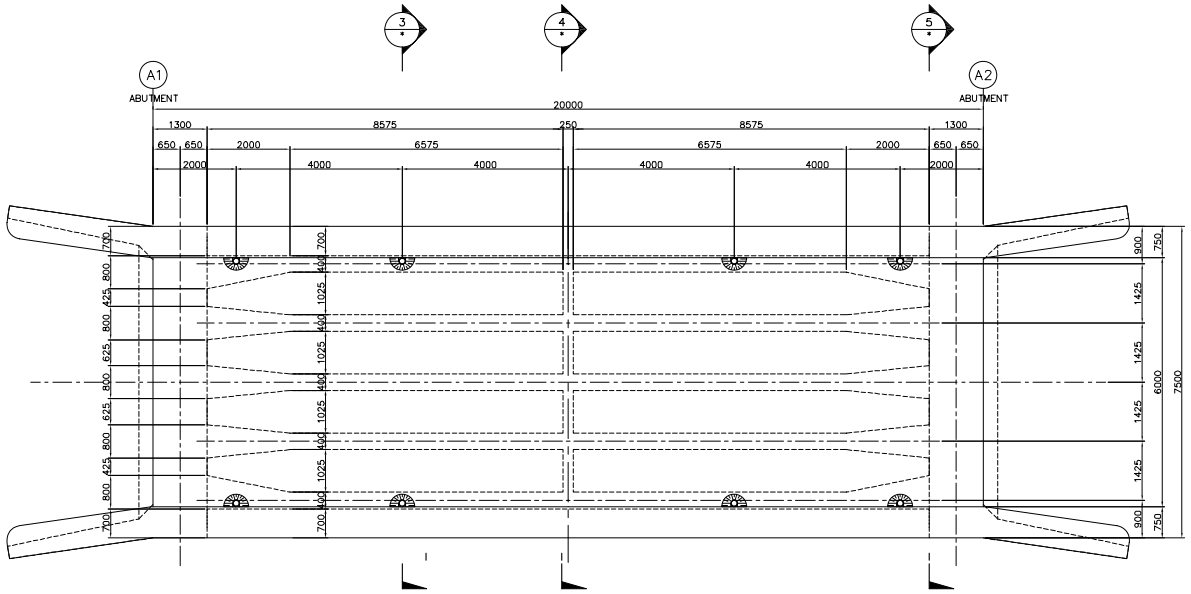

1 PLAN
SCALE 1:60

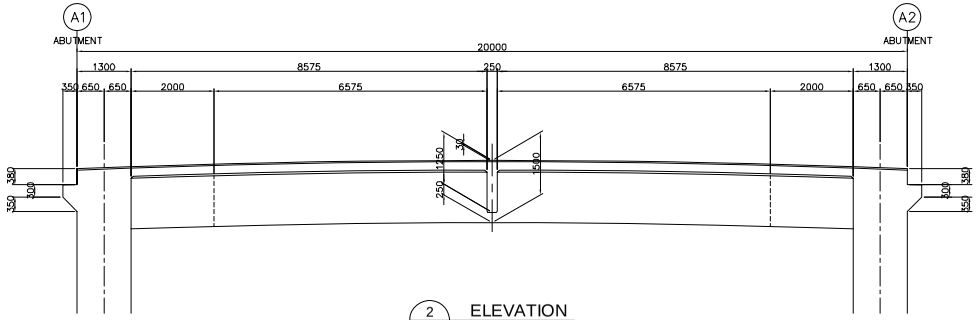

2 ELEVATION
SCALE 1:60

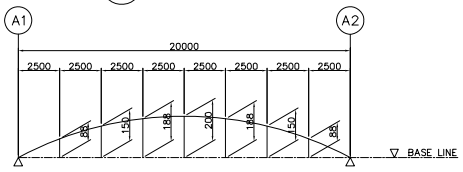

6 CAMBER DIAGRAM
NOT TO SCALE

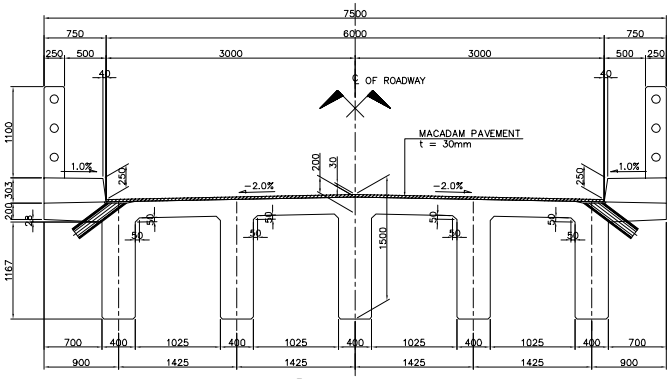

3 SECTION
SCALE 1:30

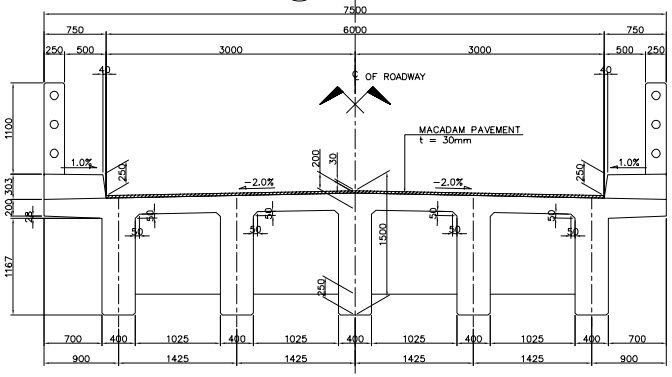

4 SECTION
SCALE 1:30

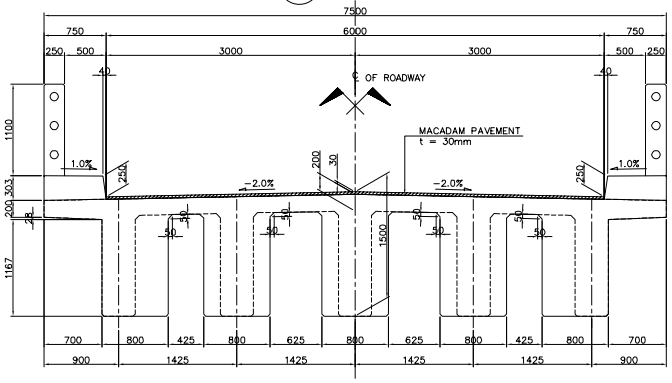

5 SECTION
SCALE 1:30

DIRECTORATE GENERAL OF HIGHWAY MINISTRY OF PUBLIC WORKS THE REPUBLIC OF INDONESIA	JICA JAPAN INTERNATIONAL COOPERATION AGENCY	KEI KATAHIRA & ENGINEERS INTERNATIONAL	THE PREPARATORY SURVEY ON THE PROJECT FOR CONSTRUCTION OF BRIDGES IN THE PROVINCE OF NUSA TENGGARA BARAT, PHASE-3 IN THE REPUBLIC OF INDONESIA	TITLE : BR-32 PETAIN III BRIDGE SUPERSTRUCTURE STRUCTURAL DIMENSION	SCALE : AS SHOWN	DRAWING No: 7-3 Rev.

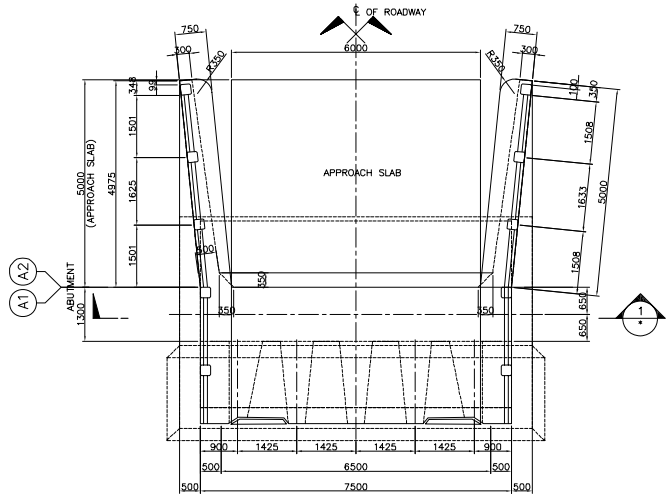

2 PLAN
SCALE 1:60

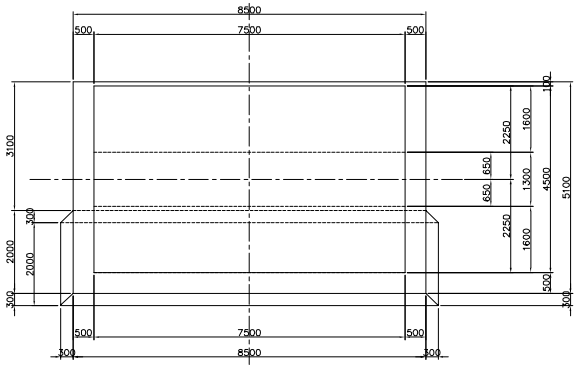

5 PLAN
SCALE 1:60

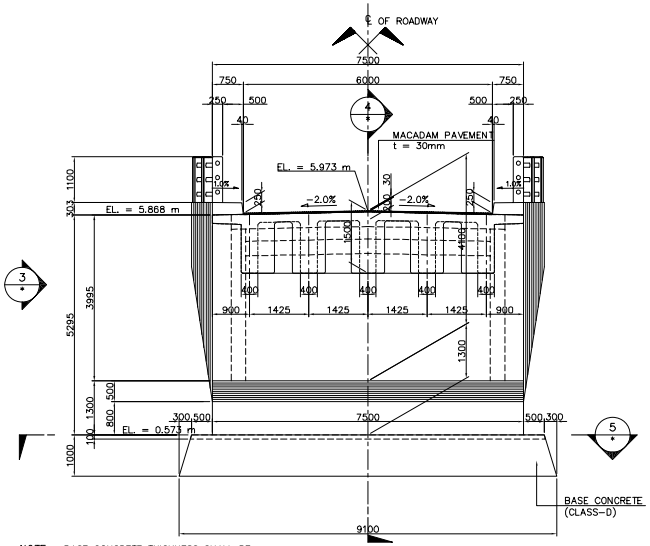

NOTE: –BASE CONCRETE THICKNESS SHALL BE ADJUSTED WITH ACTUAL DEPTH OF THE HARD SOIL WHEN EXCAVATED.
–TOP OF BASE CONCRETE SHALL BE ROUGHENED WITH SHEAR KEYS.

1 ELEVATION
SCALE 1:60

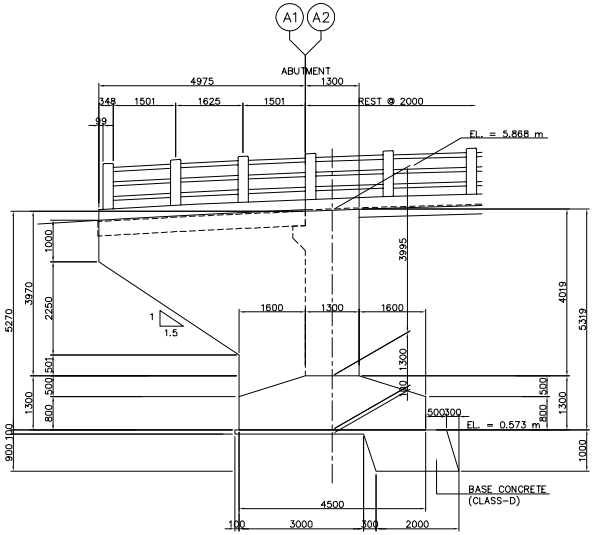

3 ELEVATION
SCALE 1:60

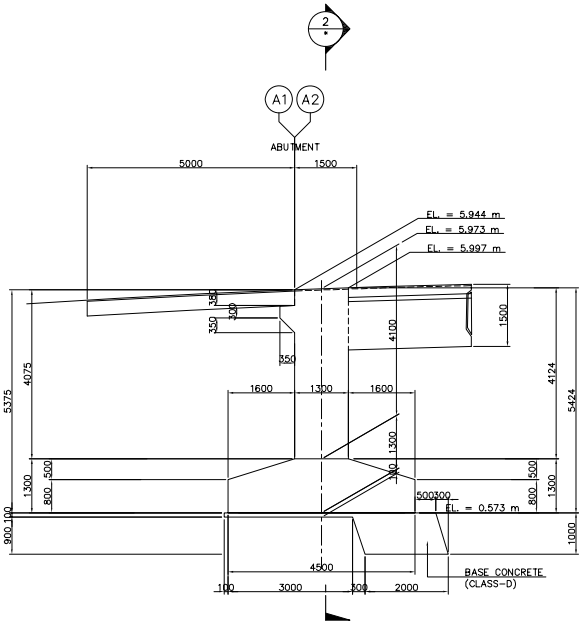

4 ELEVATION
SCALE 1:60

DIRECTORATE GENERAL OF HIGHWAY MINISTRY OF PUBLIC WORKS THE REPUBLIC OF INDONESIA	JICA JAPAN INTERNATIONAL COOPERATION AGENCY	KATAHIRA & ENGINEERS INTERNATIONAL	THE PREPARATORY SURVEY ON THE PROJECT FOR CONSTRUCTION OF BRIDGES IN THE PROVINCE OF NUSA TENGGARA BARAT, PHASE-3 IN THE REPUBLIC OF INDONESIA	TITLE: BR-32 PETAIN III BRIDGE SUBSTRUCTURE STRUCTURAL DIMENSION (ABUT. A1&A2)	SCALE: AS SHOWN	DRAWING No: 7-4 Rev.

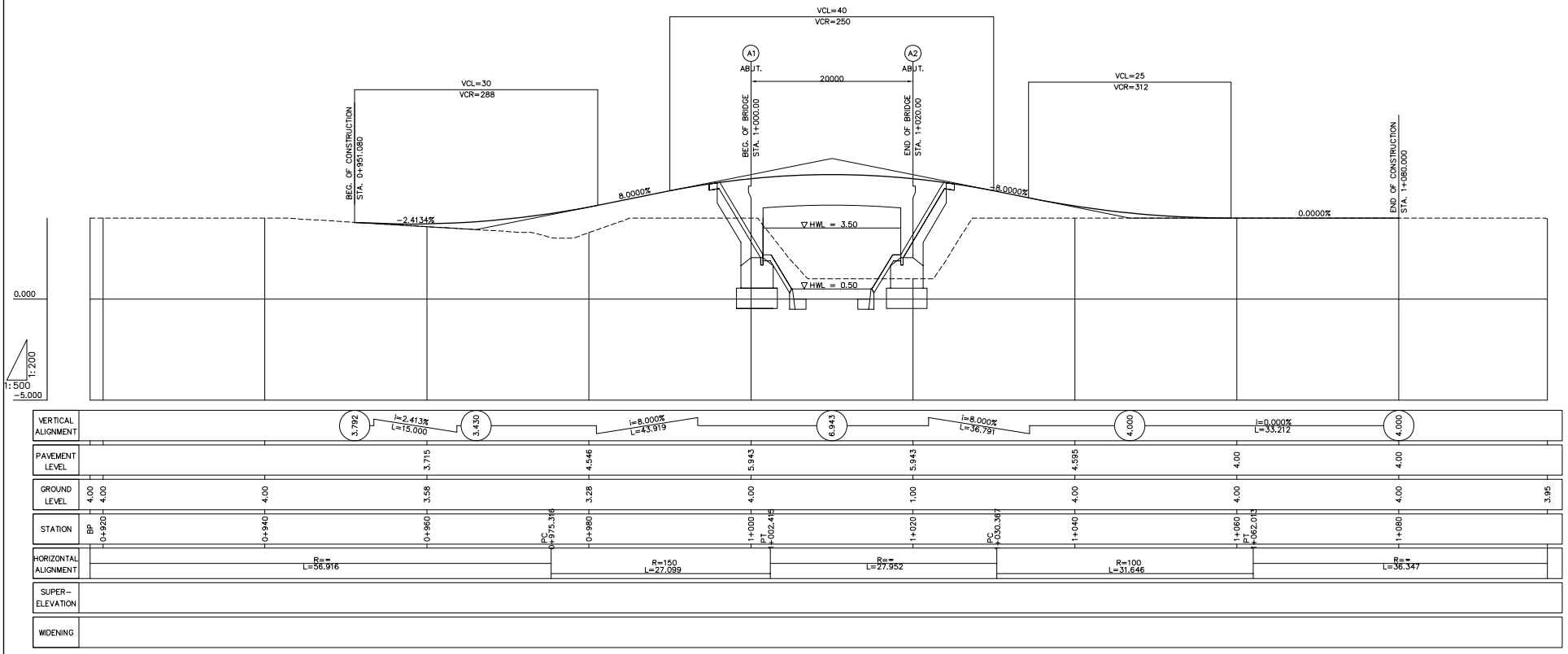

DIRECTORATE GENERAL OF HIGHWAY MINISTRY OF PUBLIC WORKS THE REPUBLIC OF INDONESIA	JICA JAPAN INTERNATIONAL COOPERATION AGENCY	KATAHIRA & ENGINEERS INTERNATIONAL	THE PREPARATORY SURVEY ON THE PROJECT FOR CONSTRUCTION OF BRIDGES IN THE PROVINCE OF NUSA TENGGARA BARAT, PHASE-3 IN THE REPUBLIC OF INDONESIA	TITLE : BR-32 PETAIN III BRIDGE APPROACH ROAD PROFILE	SCALE : H = 1:500 V = 1:200	DRAWING No: 7-5	Rev.

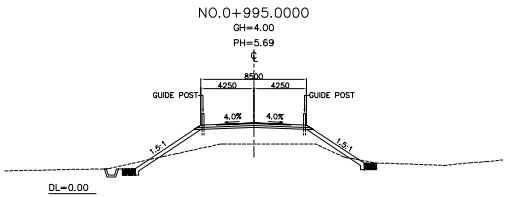

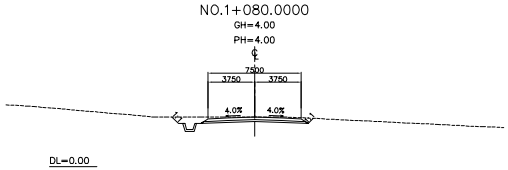

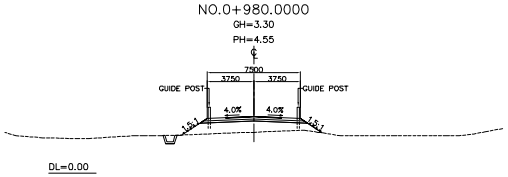

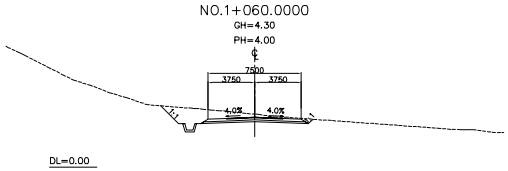

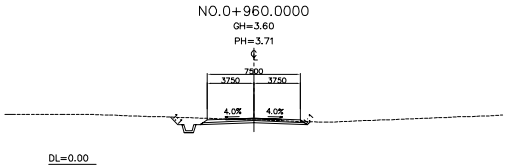

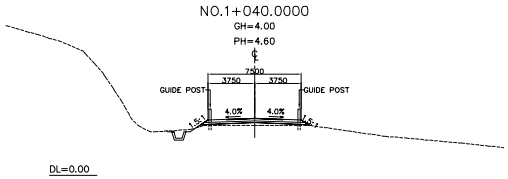

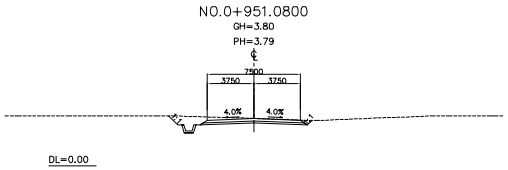

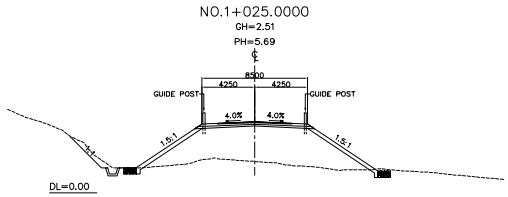

DIRECTORATE GENERAL OF HIGHWAY MINISTRY OF PUBLIC WORKS THE REPUBLIC OF INDONESIA	JICA JAPAN INTERNATIONAL COOPERATION AGENCY	KATAHIRA & ENGINEERS INTERNATIONAL	THE PREPARATORY SURVEY ON THE PROJECT FOR CONSTRUCTION OF BRIDGES IN THE PROVINCE OF NUSA TENGGARA BARAT, PHASE-3 IN THE REPUBLIC OF INDONESIA	TITLE : BR-32 PETAIN III BRIDGE APPROACH ROAD CROSS SECTIONS	SCALE : 1:400	DRAWING No: 7-6 Rev.

8. BR-33 MOLONG BRIDGE

ELEMENTS OF CURVE											
PI NO.	STATION	COORDINATES		Δ	R	T	Lc	E	e%	W	V(kph)
		NORTHING	EASTING								
PI-00	0+882.41	9002928.554	519258.876	NO HORIZONTAL CURVE							–
PI-01	0+942.81	9002987.031	519243.746	63°53'28"	30.00	18.707	33.453	5.354	*	–	–
PI-02	1+046.73	9003057.257	519325.636	11°33'10"	200.00	20.232	40.327	1.021	*	–	–
PI-03	1+124.78	9003119.006	519373.590	NO HORIZONTAL CURVE							–

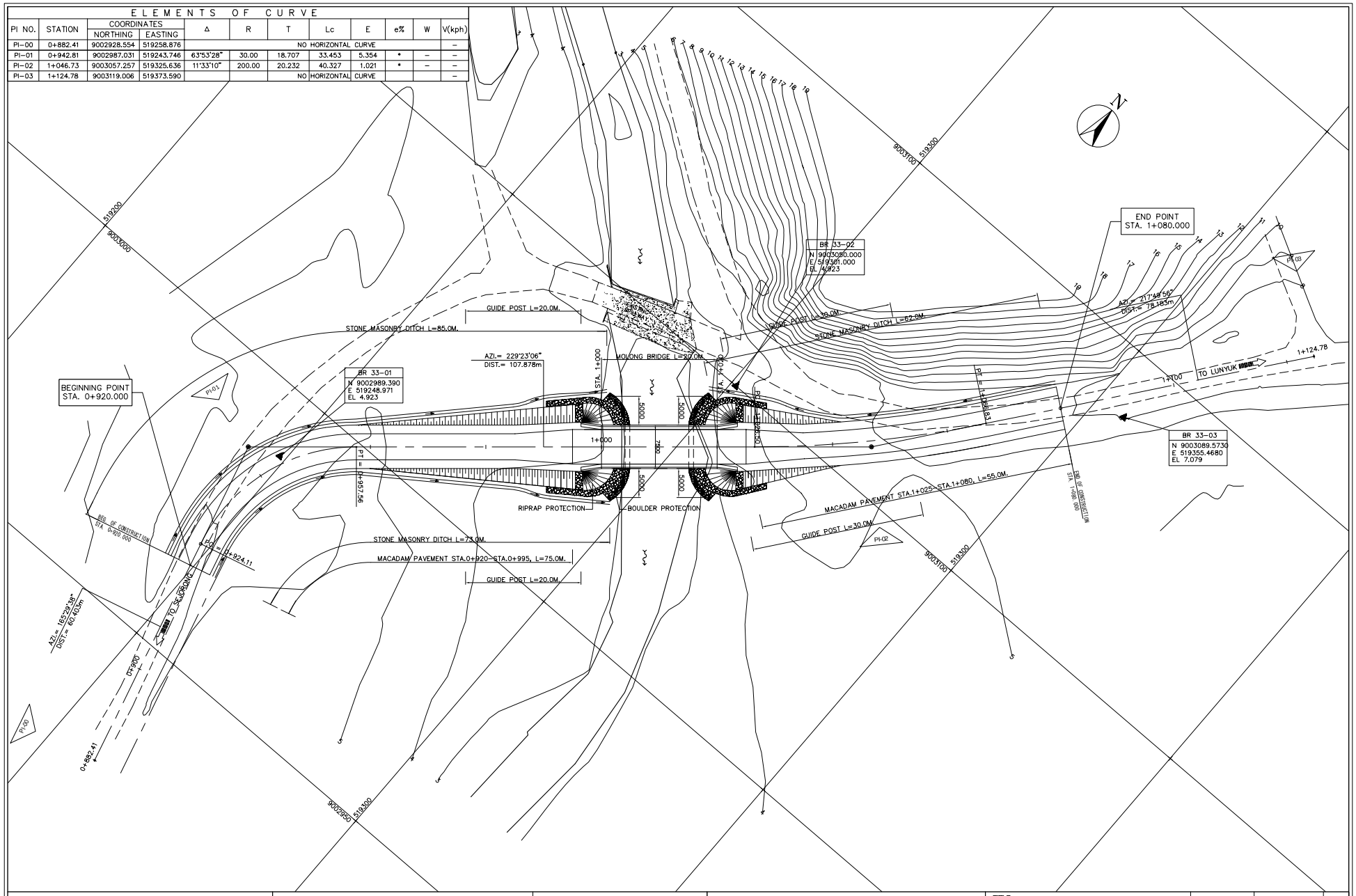

DIRECTORATE GENERAL OF HIGHWAY MINISTRY OF PUBLIC WORKS THE REPUBLIC OF INDONESIA	JICA JAPAN INTERNATIONAL COOPERATION AGENCY	KEI KATAHIRA & ENGINEERS INTERNATIONAL	THE PREPARATORY SURVEY ON THE PROJECT FOR CONSTRUCTION OF BRIDGES IN THE PROVINCE OF NUSA TENGGARA BARAT, PHASE-3 IN THE REPUBLIC OF INDONESIA	TITLE: BR-33 MOLONG BRIDGE GENERAL SITE PLAN	SCALE: 1:600	DRAWING No: 8-1 Rev.

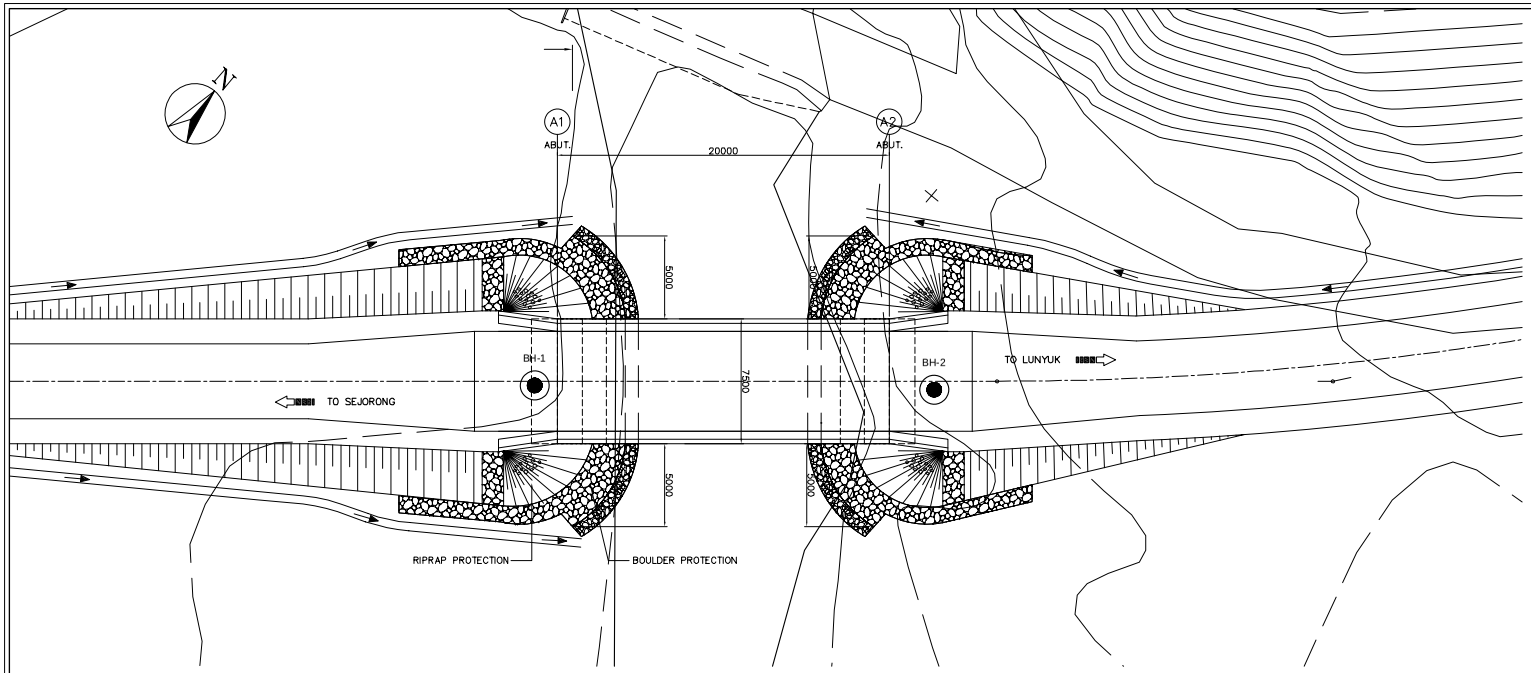

B GENERAL PLAN
SCALE 1:300

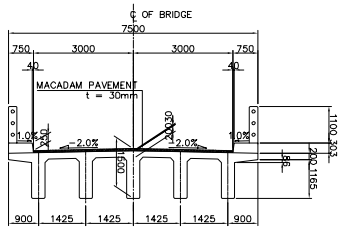

1 SECTION @ MIDSPAN
SCALE 1:150

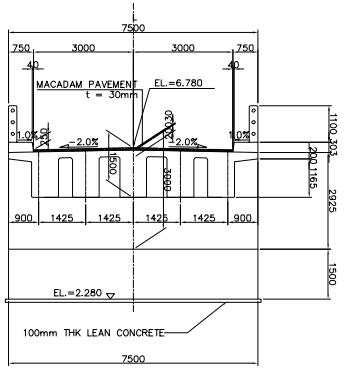

2 SECTION @ ABUTMENT
SCALE 1:150

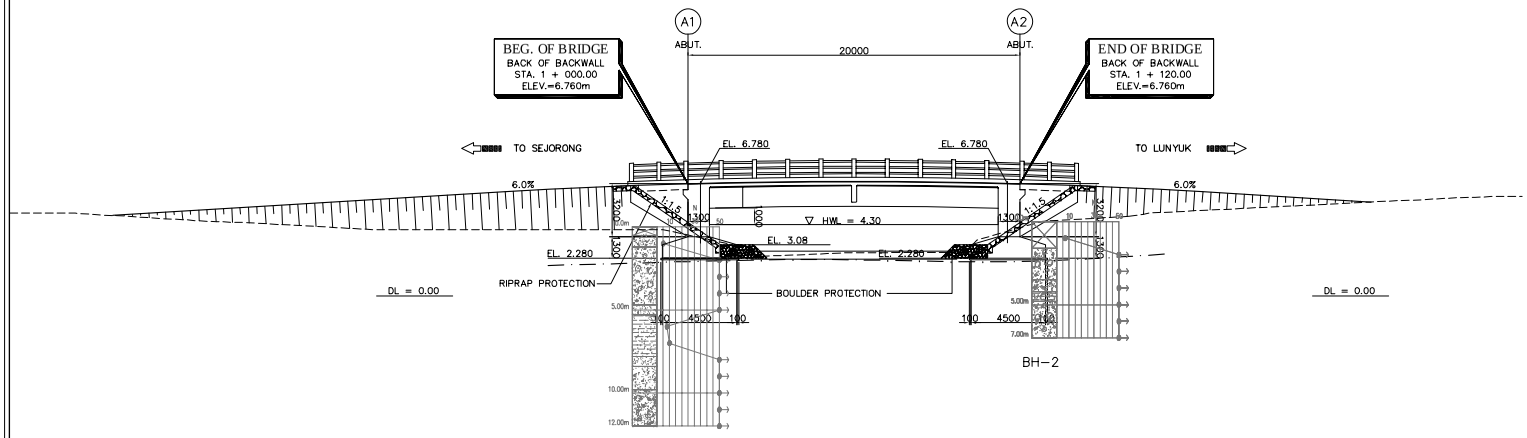

A GENERAL ELEVATION
SCALE 1:300

DIRECTORATE GENERAL OF HIGHWAY MINISTRY OF PUBLIC WORKS THE REPUBLIC OF INDONESIA	JICA JAPAN INTERNATIONAL COOPERATION AGENCY	KATAHIRA & ENGINEERS INTERNATIONAL	THE PREPARATORY SURVEY ON THE PROJECT FOR CONSTRUCTION OF BRIDGES IN THE PROVINCE OF NUSA TENGGARA BARAT, PHASE-3 IN THE REPUBLIC OF INDONESIA	TITLE: BR. -33 MOLONG BRIDGE GEN. PLAN, ELEVATION & SECTIONS	SCALE: AS SHOWN	DRAWING No: 8-2 Rev.

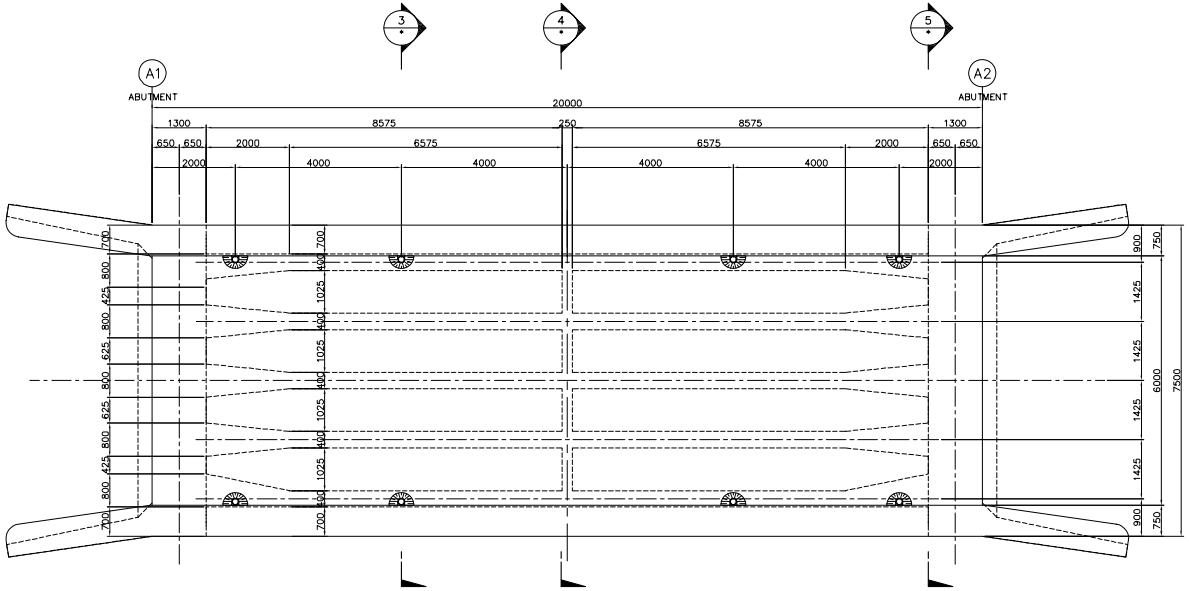

1 PLAN
SCALE 1:60

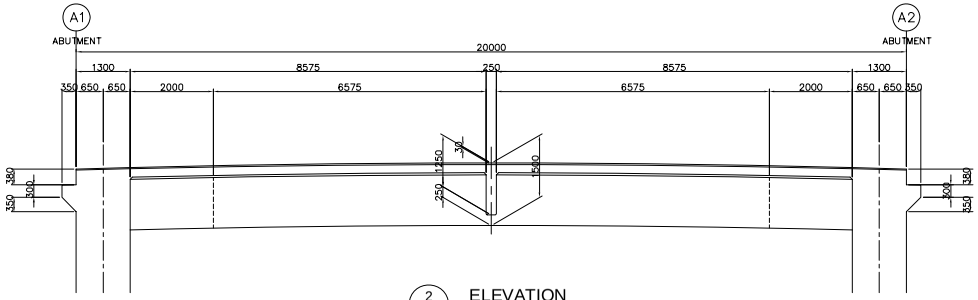

2 ELEVATION
SCALE 1:60

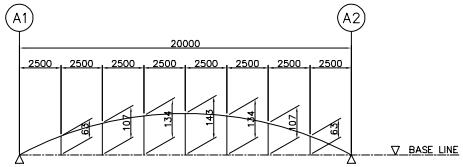

6 CAMBER DIAGRAM
NOT TO SCALE

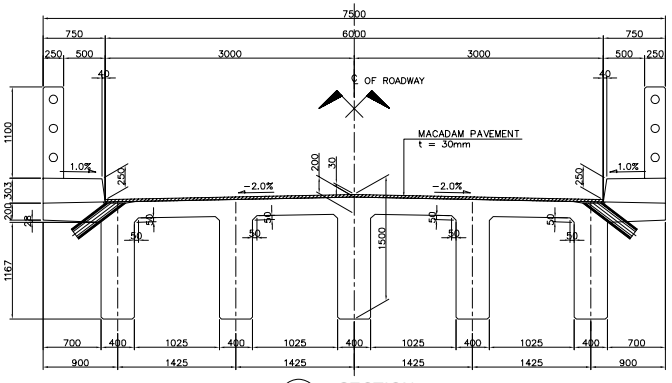

3 SECTION
SCALE 1:30

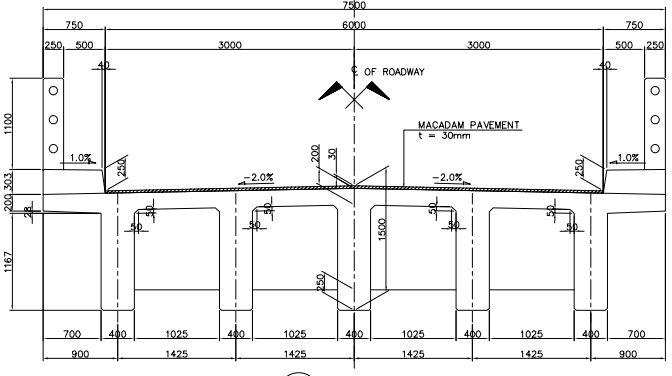

4 SECTION
SCALE 1:30

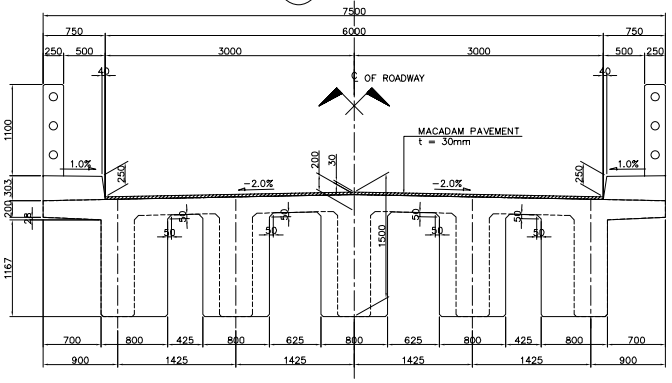

5 SECTION
SCALE 1:30

DIRECTORATE GENERAL OF HIGHWAY MINISTRY OF PUBLIC WORKS THE REPUBLIC OF INDONESIA	JICA JAPAN INTERNATIONAL COOPERATION AGENCY	KATAHIRA & ENGINEERS INTERNATIONAL	THE PREPARATORY SURVEY ON THE PROJECT FOR CONSTRUCTION OF BRIDGES IN THE PROVINCE OF NUSA TENGGARA BARAT, PHASE-3 IN THE REPUBLIC OF INDONESIA	TITLE: BR-33 MOLONG BRIDGE SUPERSTRUCTURE STRUCTURAL DIMENSION	SCALE: AS SHOWN	DRAWING No: 8-3 Rev.

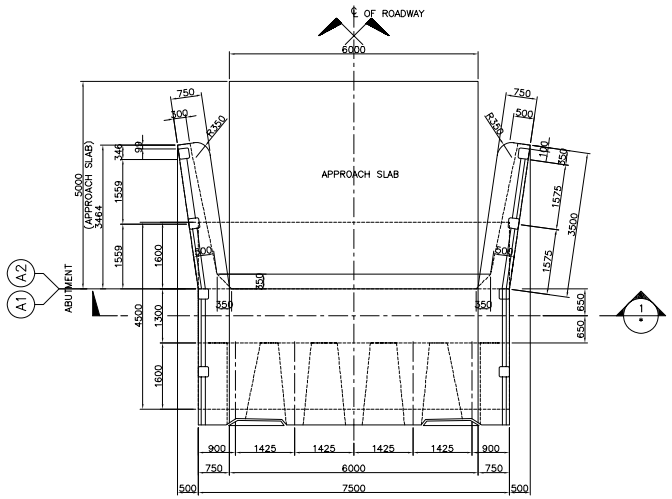

2 PLAN
SCALE 1:60

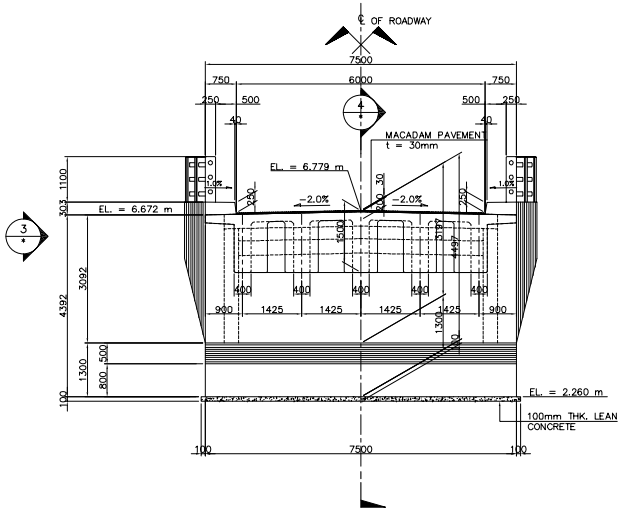

1 ELEVATION
SCALE 1:60

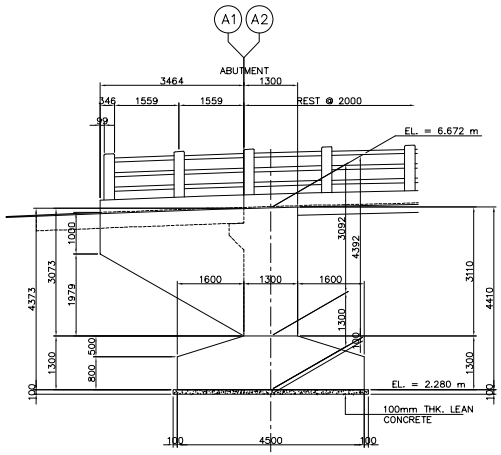

3 ELEVATION
SCALE 1:60

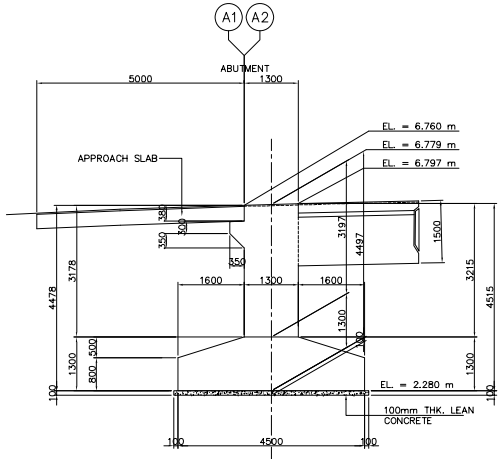

4 ELEVATION
SCALE 1:60

DIRECTORATE GENERAL OF HIGHWAY MINISTRY OF PUBLIC WORKS THE REPUBLIC OF INDONESIA	JICA JAPAN INTERNATIONAL COOPERATION AGENCY	KATAHIRA & ENGINEERS INTERNATIONAL	THE PREPARATORY SURVEY ON THE PROJECT FOR CONSTRUCTION OF BRIDGES IN THE PROVINCE OF NUSA TENGGARA BARAT, PHASE-3 IN THE REPUBLIC OF INDONESIA	TITLE: BR-33 MOLONG BRIDGE SUBSTRUCTURE STRUCTURAL DIMENSION (ABUT. A1 AND A2)	SCALE: AS SHOWN	DRAWING No: 8-4 Rev.

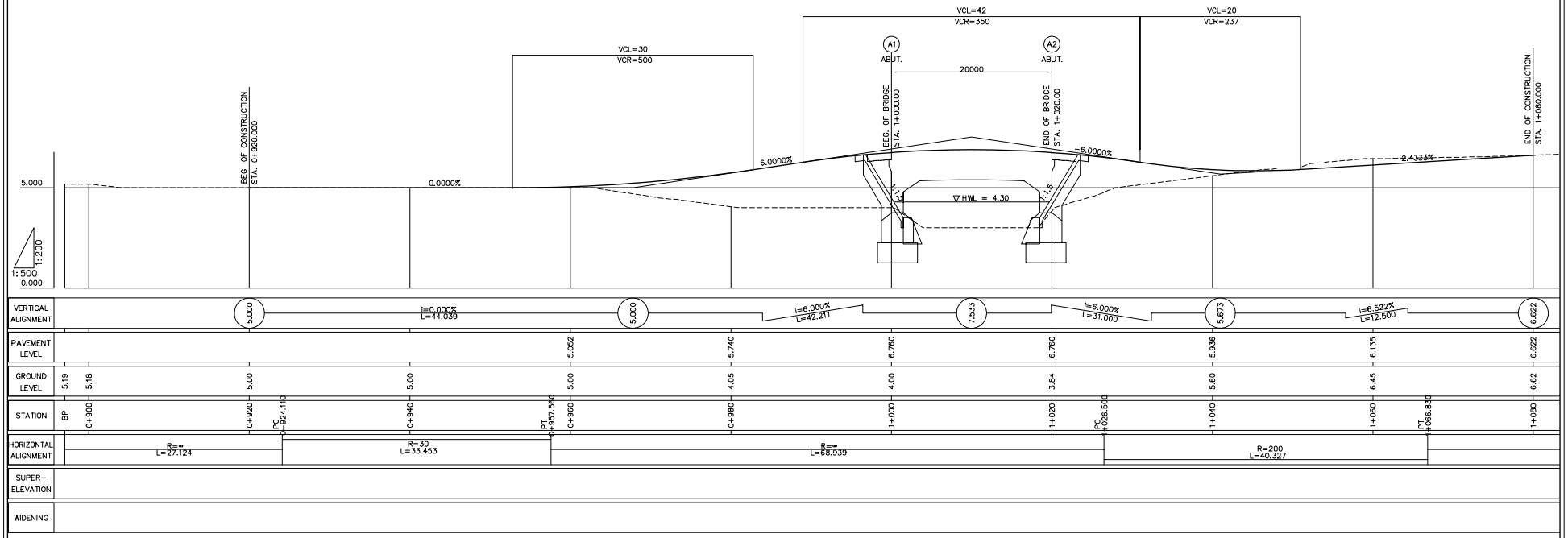

DIRECTORATE GENERAL OF HIGHWAY MINISTRY OF PUBLIC WORKS THE REPUBLIC OF INDONESIA	JICA JAPAN INTERNATIONAL COOPERATION AGENCY	KATAHIRA & ENGINEERS INTERNATIONAL	THE PREPARATORY SURVEY ON THE PROJECT FOR CONSTRUCTION OF BRIDGES IN THE PROVINCE OF NUSA TENGGARA BARAT, PHASE-3 IN THE REPUBLIC OF INDONESIA	TITLE : BR-33 MOLONG BRIDGE APPROACH ROAD PROFILE	SCALE : H = 1:500 V = 1:200	DRAWING No: 8-5 Rev.

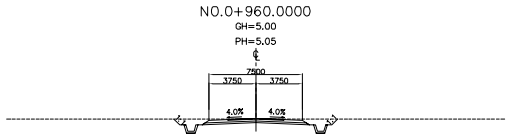

DL=0.00

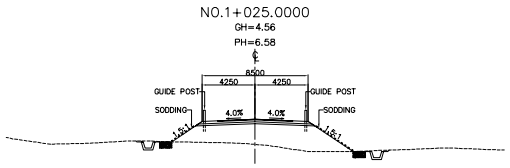

DL=0.00

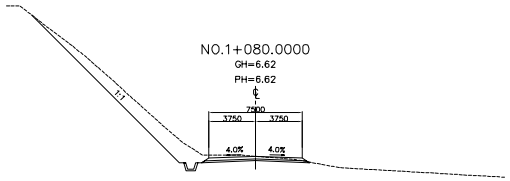

DL=0.00

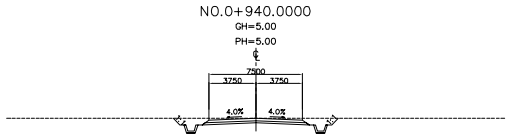

DL=0.00

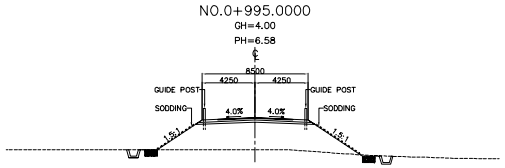

DL=0.00

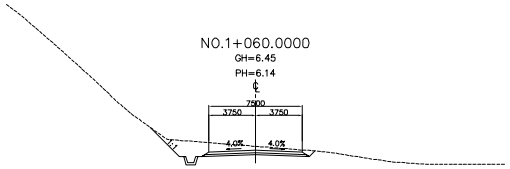

DL=0.00

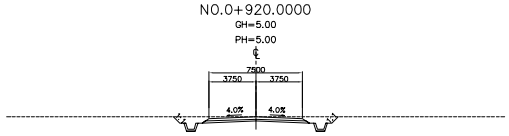

DL=0.00

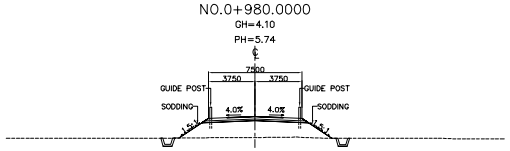

DL=0.00

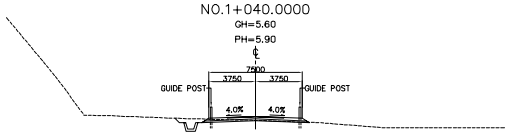

DL=0.00

DIRECTORATE GENERAL OF HIGHWAY MINISTRY OF PUBLIC WORKS THE REPUBLIC OF INDONESIA	JICA JAPAN INTERNATIONAL COOPERATION AGENCY	KATAHIRA & ENGINEERS INTERNATIONAL	THE PREPARATORY SURVEY ON THE PROJECT FOR CONSTRUCTION OF BRIDGES IN THE PROVINCE OF NUSA TENGGARA BARAT, PHASE-3 IN THE REPUBLIC OF INDONESIA	TITLE : BR-33 MOLONG BRIDGE APPROACH ROAD CROSS SECTIONS	SCALE : 1:400	DRAWING No: 8-6 Rev.

9. BR-34 EMANG BRIDGE

ELEMENTS OF CURVE											
PI NO.	STATION	COORDINATES		Δ	R	T	Lc	E	e%	W	V(kph)
		NORTHING	EASTING								
PI-00	0+901.951	9004491.429	519956.833	NO HORIZONTAL CURVE							–
PI-01	1+070.420	9004658.270	519980.231	15°00'00"	100.00	13.164	26.177	0.863	*	–	–
PI-02	1+171.180	9004751.171	520019.630	NO HORIZONTAL CURVE							–

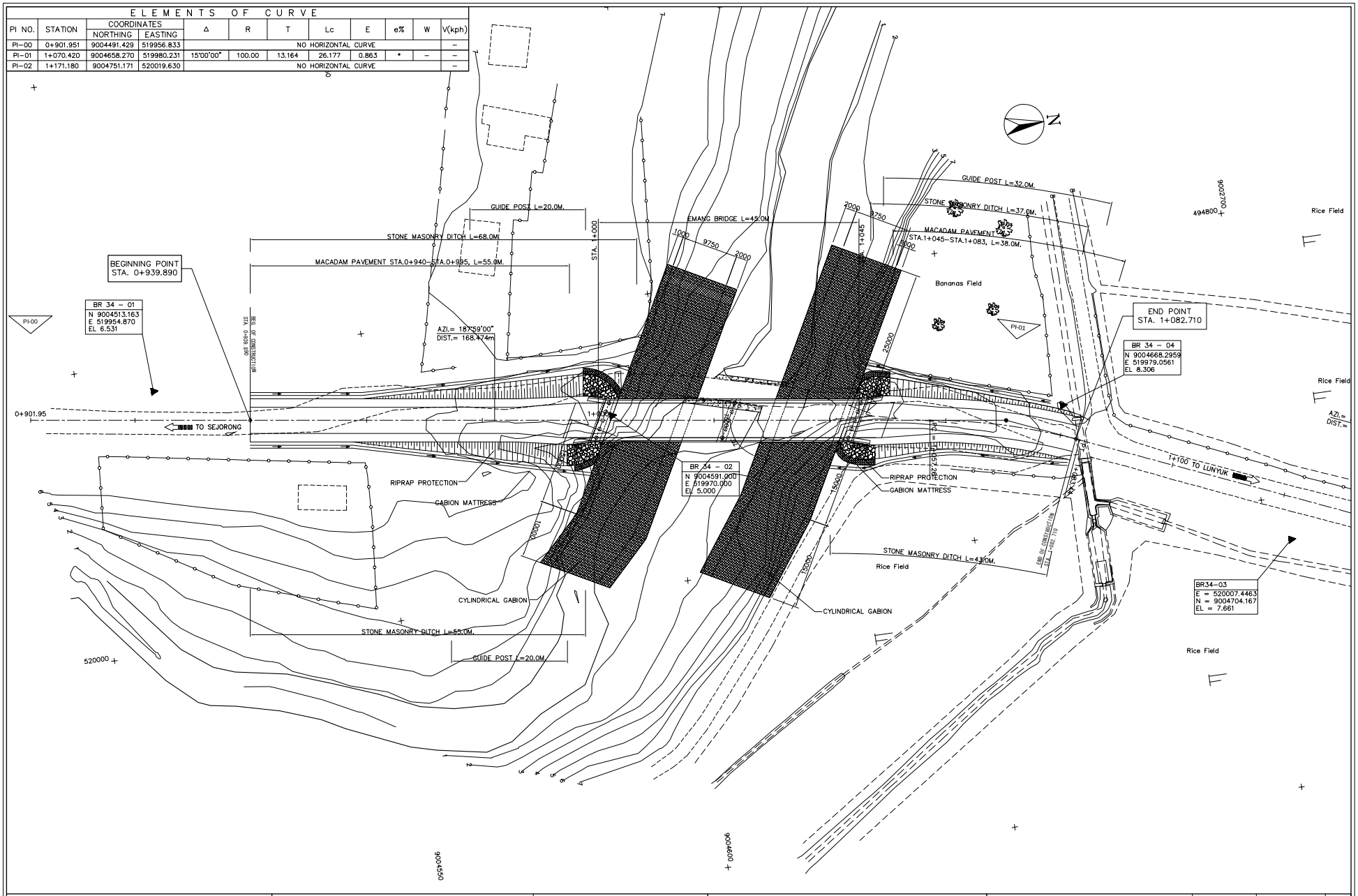

DIRECTORATE GENERAL OF HIGHWAY MINISTRY OF PUBLIC WORKS THE REPUBLIC OF INDONESIA	JICA JAPAN INTERNATIONAL COOPERATION AGENCY	KATAHIRA & ENGINEERS INTERNATIONAL	THE PREPARATORY SURVEY ON THE PROJECT FOR CONSTRUCTION OF BRIDGES IN THE PROVINCE OF NUSA TENGGARA BARAT, PHASE-3 IN THE REPUBLIC OF INDONESIA	TITLE : BR-34 EMANG BRIDGE GENERAL SITE PLAN	SCALE : 1:600	DRAWING No: 9-1 Rev.

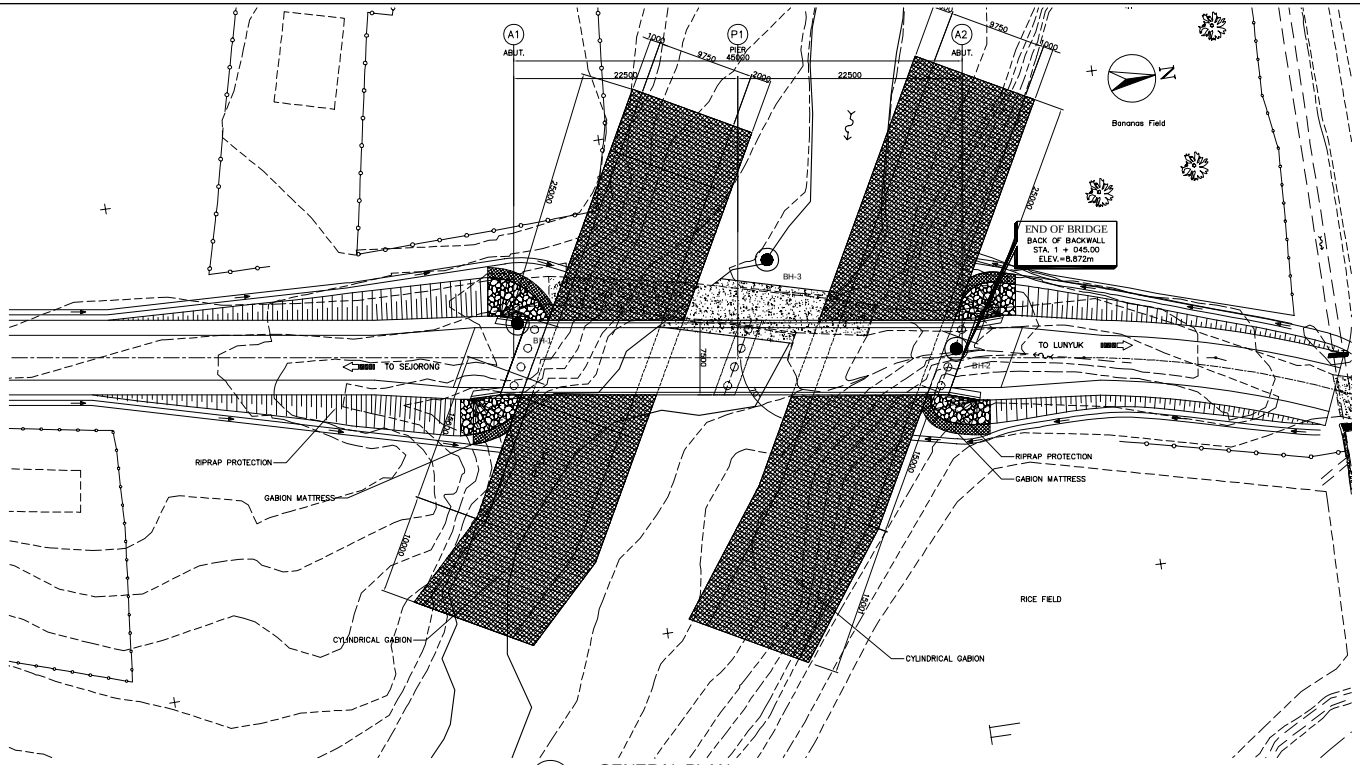

1 GENERAL PLAN
SCALE 1:500

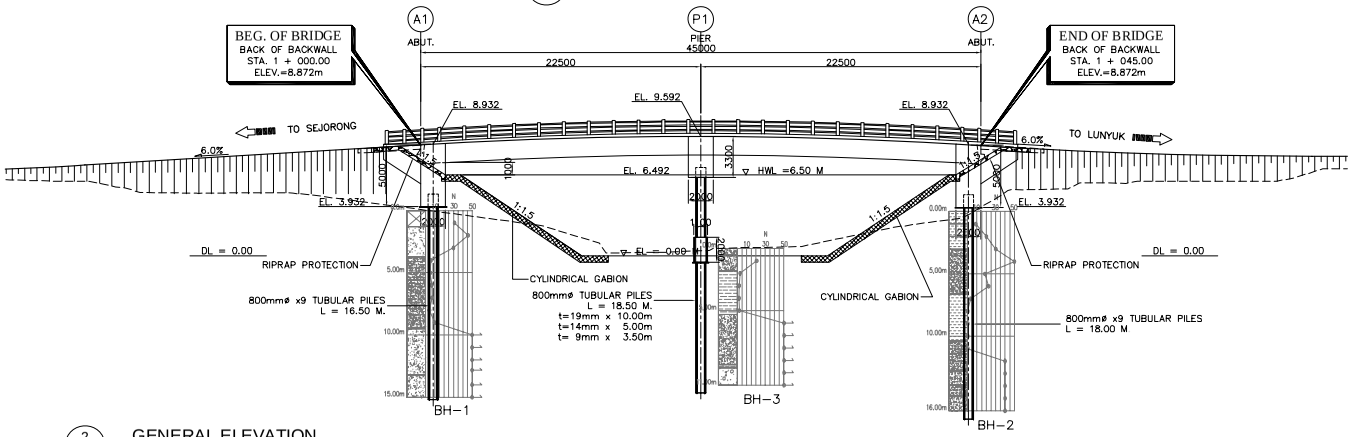

2 GENERAL ELEVATION
SCALE 1:400

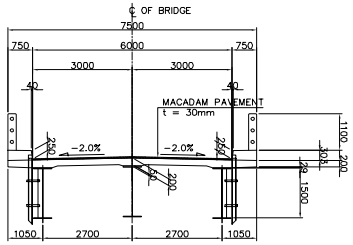

3 SECTION @ MIDSPAN
SCALE 1:150

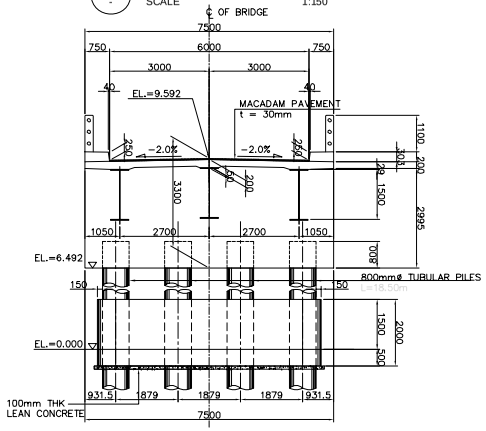

4 SECTION @ PIER
SCALE 1:150

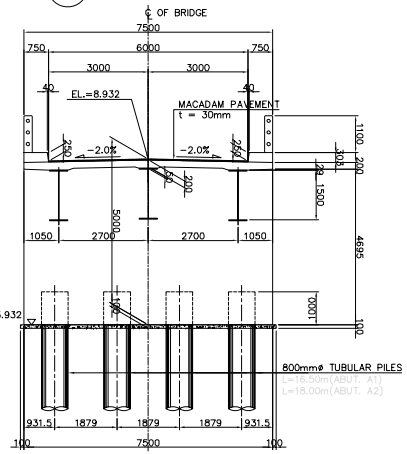

4 SECTION @ ABUTMENT
SCALE 1:150

DIRECTORATE GENERAL OF HIGHWAY MINISTRY OF PUBLIC WORKS THE REPUBLIC OF INDONESIA	JICA JAPAN INTERNATIONAL COOPERATION AGENCY	KATAHIRA & ENGINEERS INTERNATIONAL	THE PREPARATORY SURVEY ON THE PROJECT FOR CONSTRUCTION OF BRIDGES IN THE PROVINCE OF NUSA TENGGARA BARAT, PHASE-3 IN THE REPUBLIC OF INDONESIA	TITLE: BR-34 EMANG BRIDGE GEN. PLAN, ELEVATION & SECTIONS	SCALE: AS SHOWN	DRAWING No: 9-2 Rev.

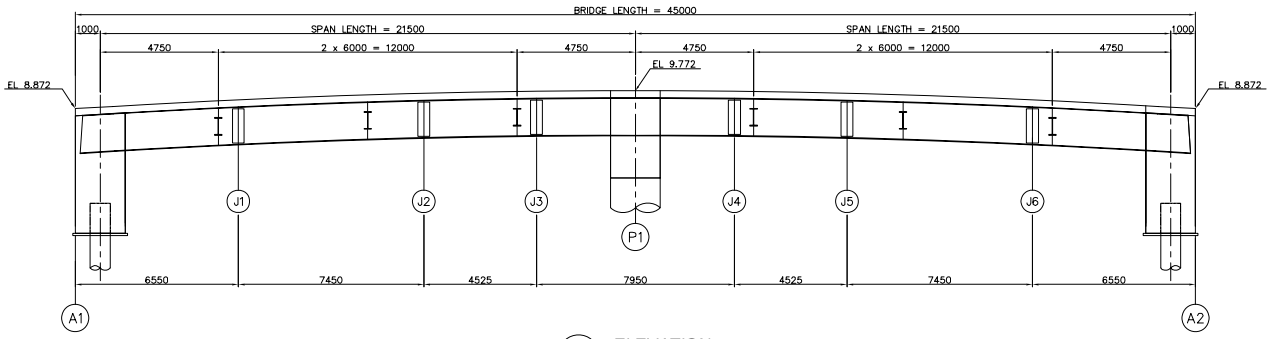

1 ELEVATION
SCALE 1:100

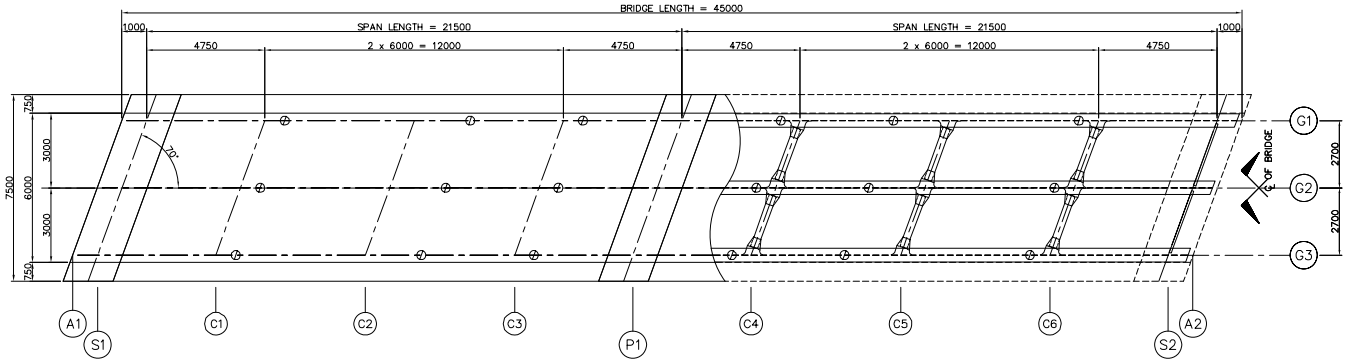

2 PLAN
SCALE 1:100

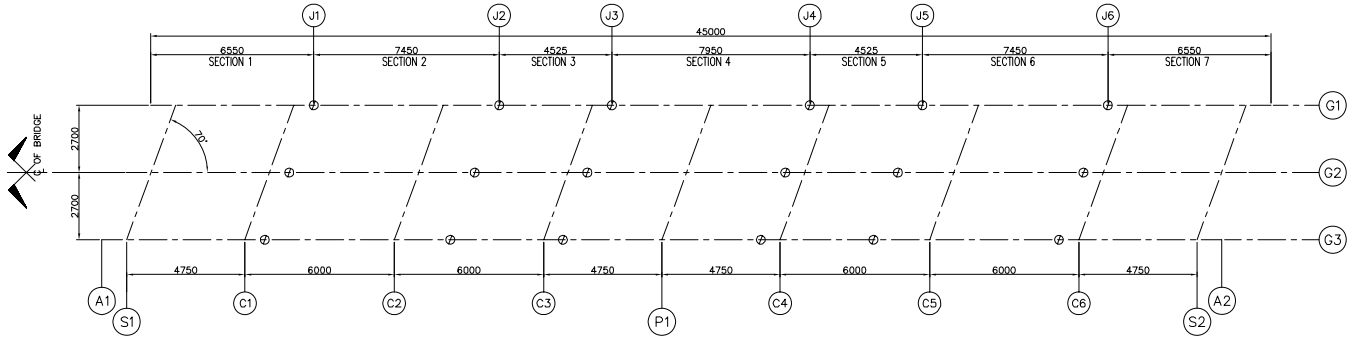

3 KEY PLAN
SCALE 1:100

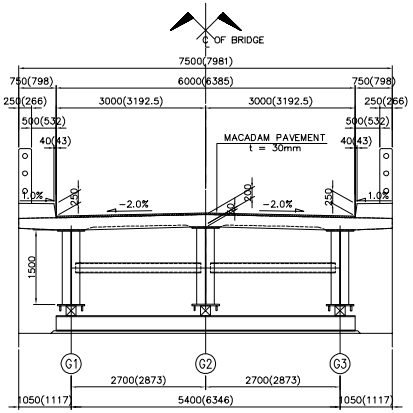

4 SECTION @ S1, P1& S2
SCALE 1:50

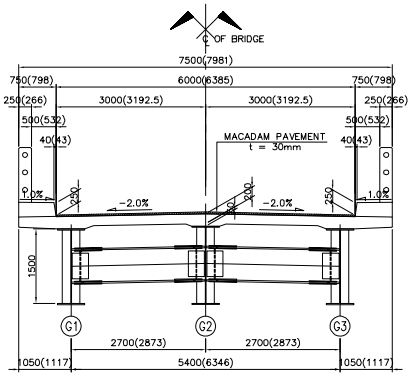

5 SECTION @ C1~C6
SCALE 1:50

DIRECTORATE GENERAL OF HIGHWAY MINISTRY OF PUBLIC WORKS THE REPUBLIC OF INDONESIA	JICA JAPAN INTERNATIONAL COOPERATION AGENCY	KATAHIRA & ENGINEERS INTERNATIONAL	THE PREPARATORY SURVEY ON THE PROJECT FOR CONSTRUCTION OF BRIDGES IN THE PROVINCE OF NUSA TENGGARA BARAT, PHASE-3 IN THE REPUBLIC OF INDONESIA	TITLE : BR-34 EMANG BRIDGE GEN. DIM. OF SUPERSTRUCTURE	SCALE : AS SHOWN	DRAWING No: 9-3 Rev.

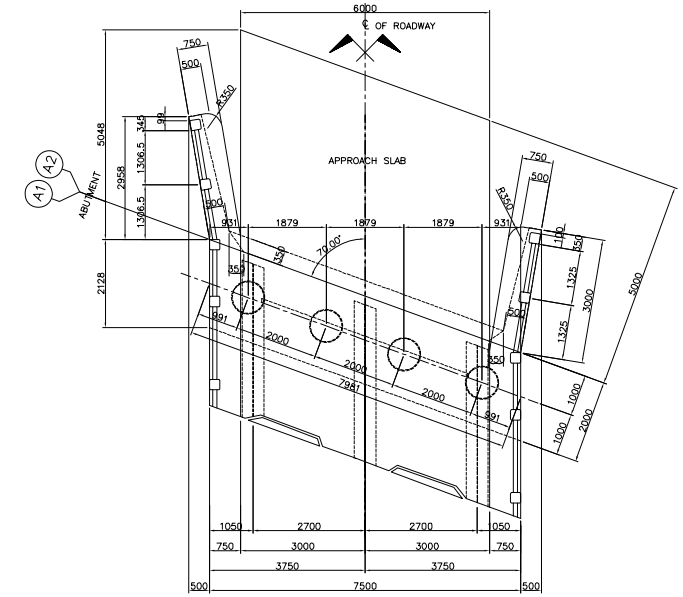

1 PLAN
SCALE 1:60

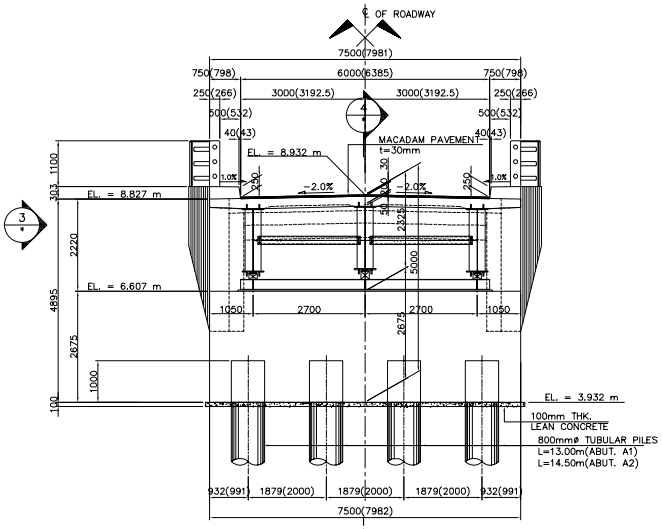

2 ELEVATION
SCALE 1:60

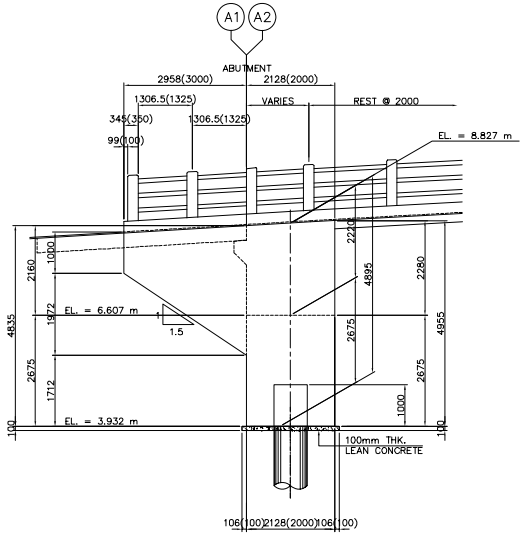

3 ELEVATION
SCALE 1:60

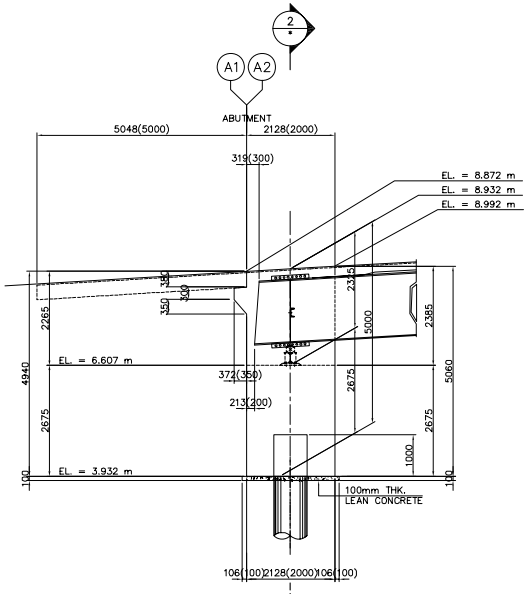

4 ELEVATION
SCALE 1:60

DIRECTORATE GENERAL OF HIGHWAY MINISTRY OF PUBLIC WORKS THE REPUBLIC OF INDONESIA	JICA JAPAN INTERNATIONAL COOPERATION AGENCY	KATAHIRA & ENGINEERS INTERNATIONAL	THE PREPARATORY SURVEY ON THE PROJECT FOR CONSTRUCTION OF BRIDGES IN THE PROVINCE OF NUSA TENGGARA BARAT, PHASE-3 IN THE REPUBLIC OF INDONESIA	TITLE : BR-34 EMANG BRIDGE SUBSTRUCTURE STRUCTURAL DIMENSION (ABUTMENT A1 & A2)	SCALE : AS SHOWN	DRAWING No: 9-4 Rev.

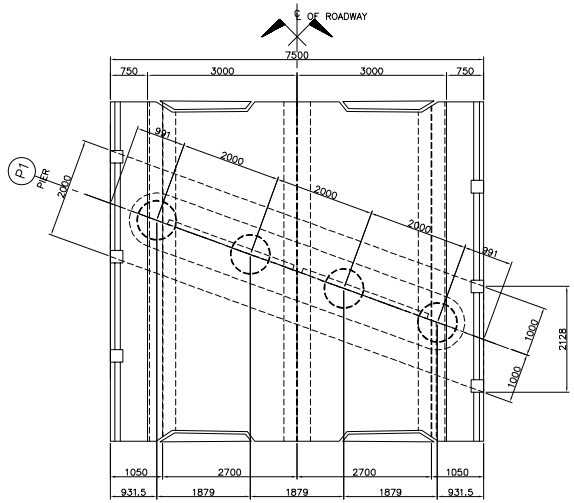

1 - PLAN
SCALE 1:50

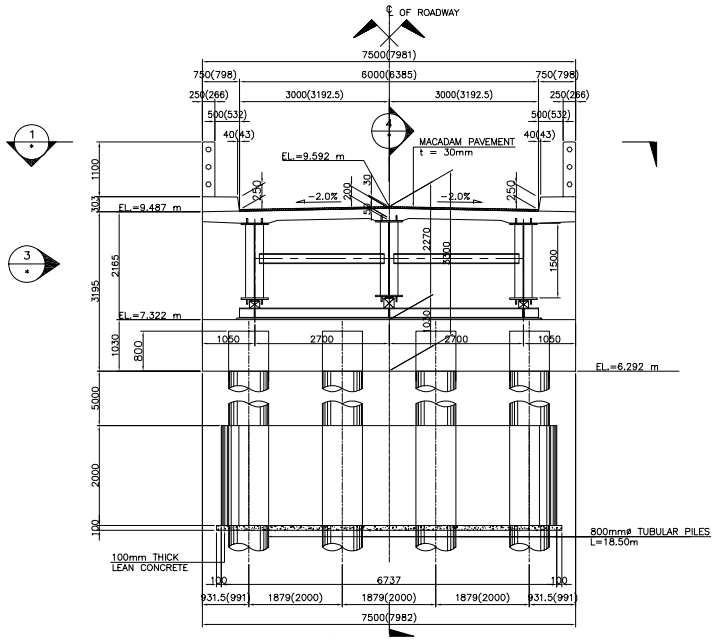

2 - ELEVATION
SCALE 1:50

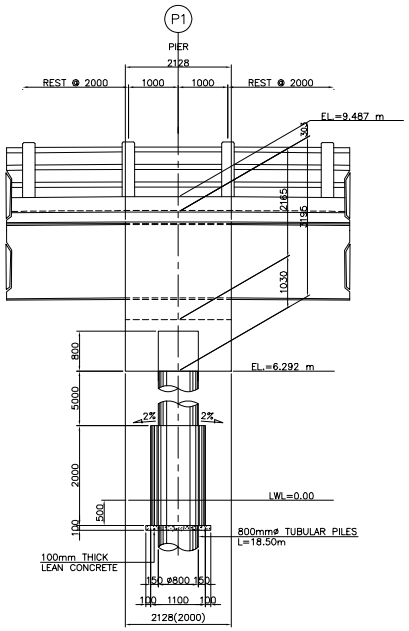

3 - ELEVATION
SCALE 1:50

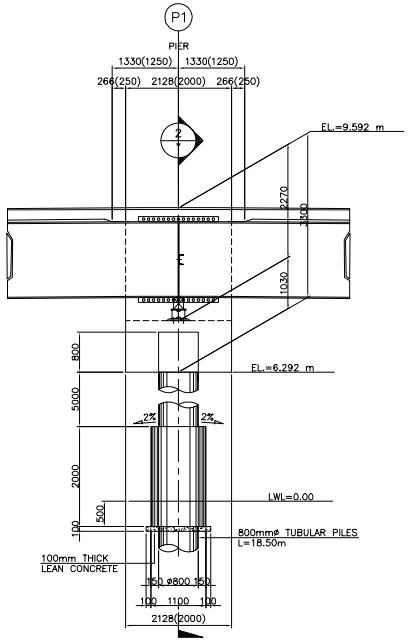

4 - ELEVATION
SCALE 1:50

DIRECTORATE GENERAL OF HIGHWAY MINISTRY OF PUBLIC WORKS THE REPUBLIC OF INDONESIA	JICA JAPAN INTERNATIONAL COOPERATION AGENCY	KATAHIRA & ENGINEERS INTERNATIONAL	THE PREPARATORY SURVEY ON THE PROJECT FOR CONSTRUCTION OF BRIDGES IN THE PROVINCE OF NUSA TENGGARA BARAT, PHASE-3 IN THE REPUBLIC OF INDONESIA	TITLE : BR-34 EMANG BRIDGE SUBSTRUCTURE STRUCTURAL DIMENSION (PIER P1)	SCALE : AS SHOWN	DRAWING No: 9-5 Rev.

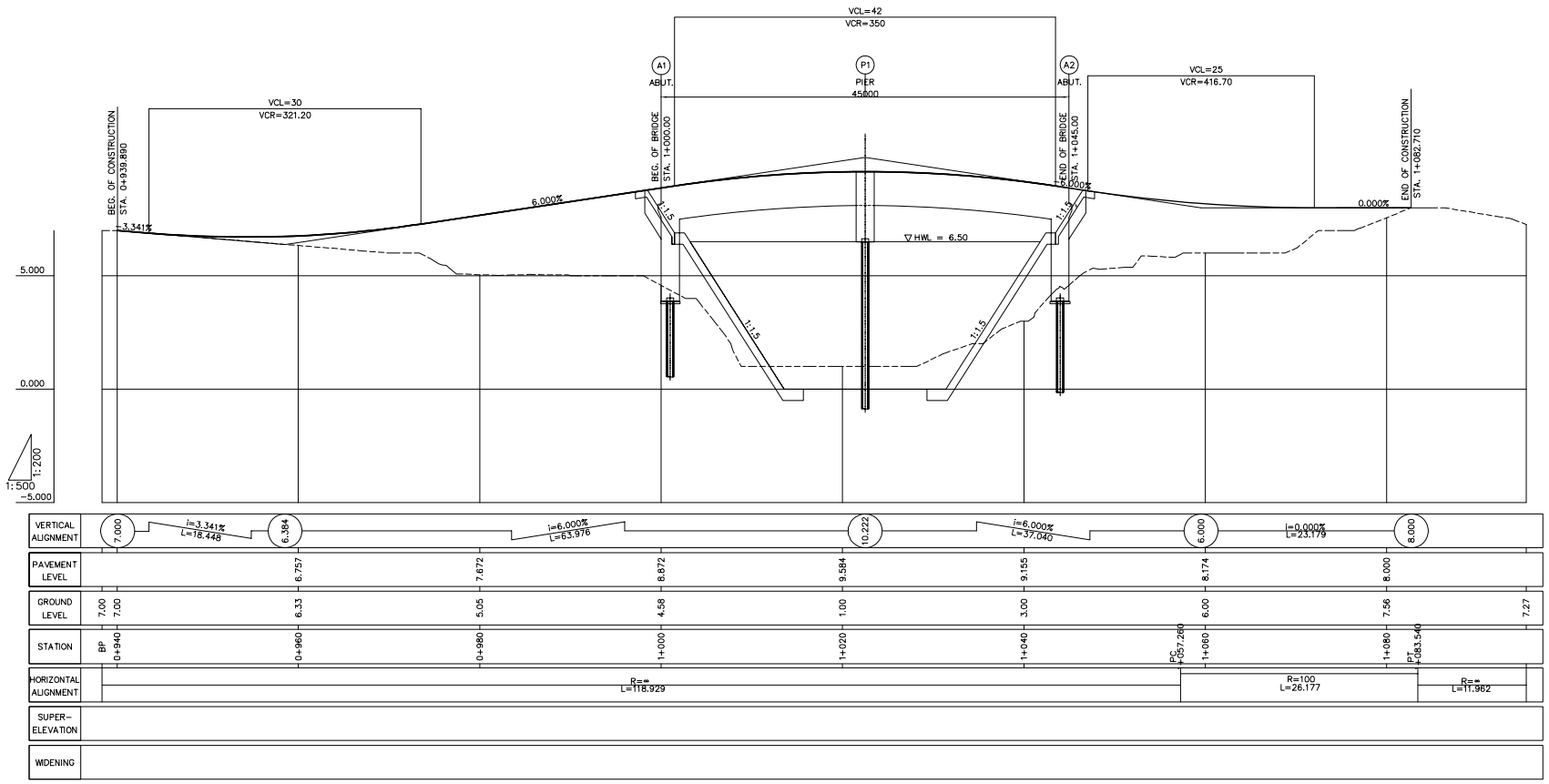

DIRECTORATE GENERAL OF HIGHWAY MINISTRY OF PUBLIC WORKS THE REPUBLIC OF INDONESIA	JICA JAPAN INTERNATIONAL COOPERATION AGENCY	KATAHIRA & ENGINEERS INTERNATIONAL	THE PREPARATORY SURVEY ON THE PROJECT FOR CONSTRUCTION OF BRIDGES IN THE PROVINCE OF NUSA TENGGARA BARAT, PHASE-3 IN THE REPUBLIC OF INDONESIA	TITLE : BR-34 EMANG BRIDGE APPROACH ROAD PROFILE	SCALE : H = 1:500 V = 1:200	DRAWING No: 9-6 Rev.

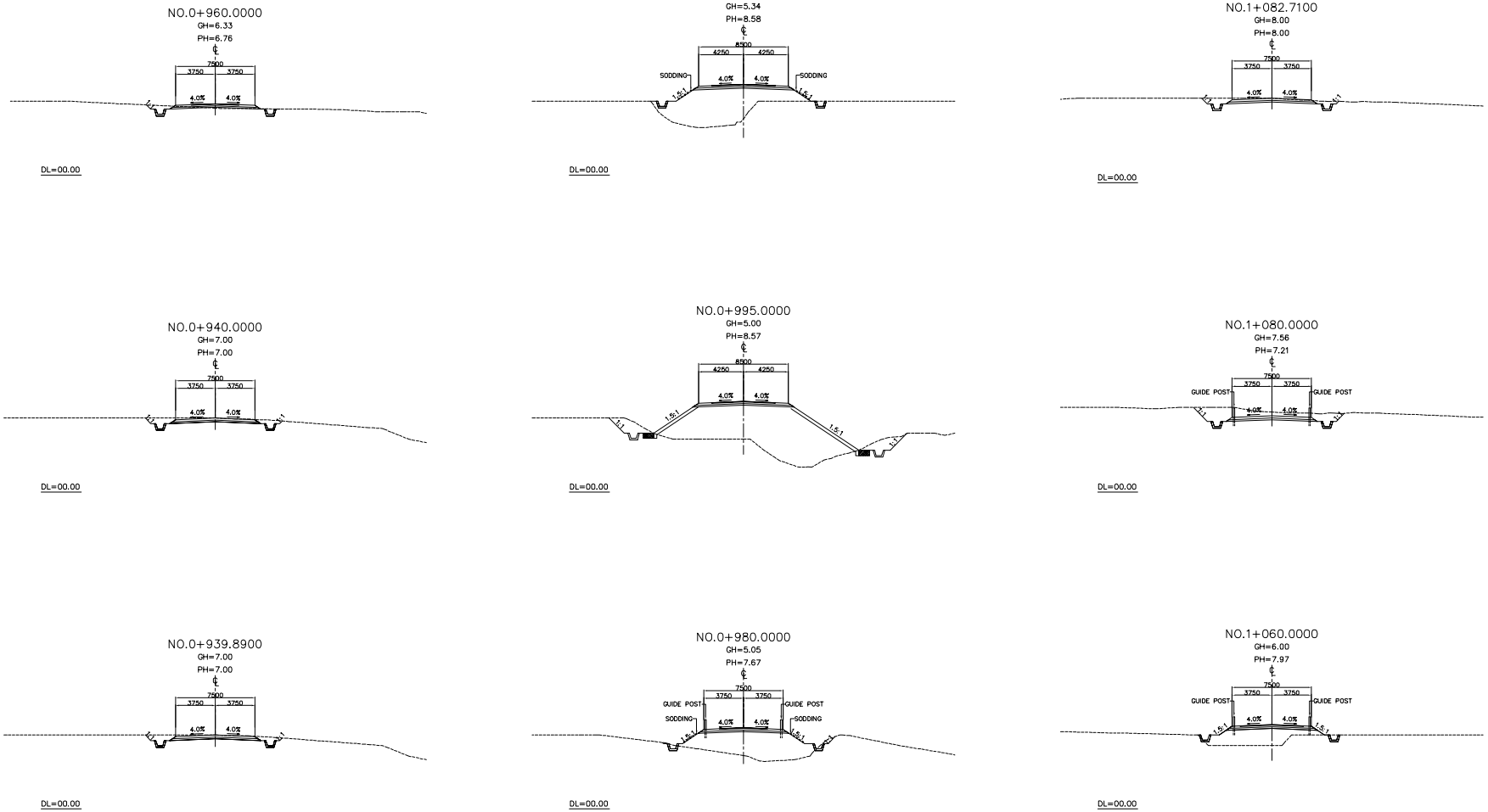

DIRECTORATE GENERAL OF HIGHWAY MINISTRY OF PUBLIC WORKS THE REPUBLIC OF INDONESIA	JICA JAPAN INTERNATIONAL COOPERATION AGENCY	KATAHIRA & ENGINEERS INTERNATIONAL	THE PREPARATORY SURVEY ON THE PROJECT FOR CONSTRUCTION OF BRIDGES IN THE PROVINCE OF NUSA TENGGARA BARAT, PHASE-3 IN THE REPUBLIC OF INDONESIA	TITLE : BR-34 EMANG BRIDGE APPROACH ROAD CROSS SECTIONS	SCALE : 1:400	DRAWING No: 9-7 Rev.

10. BR-35 KALBIR BRIDGE

ELEMENTS OF CURVE											
PI NO.	STATION	COORDINATES		Δ	R	T	Lc	E	e%	W	V(kph)
		NORTHING	EASTING								
PI-00	0+877.706	9005719.173	520348.631	NO HORIZONTAL CURVE							–
PI-01	0+944.153	9005770.823	520390.433	15°23'10"	350.00	47.278	93.988	3.179	*	–	–
PI-02	1+053.926	9005871.937	520434.606	14°01'55"	200.00	24.613	48.981	1.509	*	–	–
PI-03	1+130.540	9005932.809	520481.534	NO HORIZONTAL CURVE							–

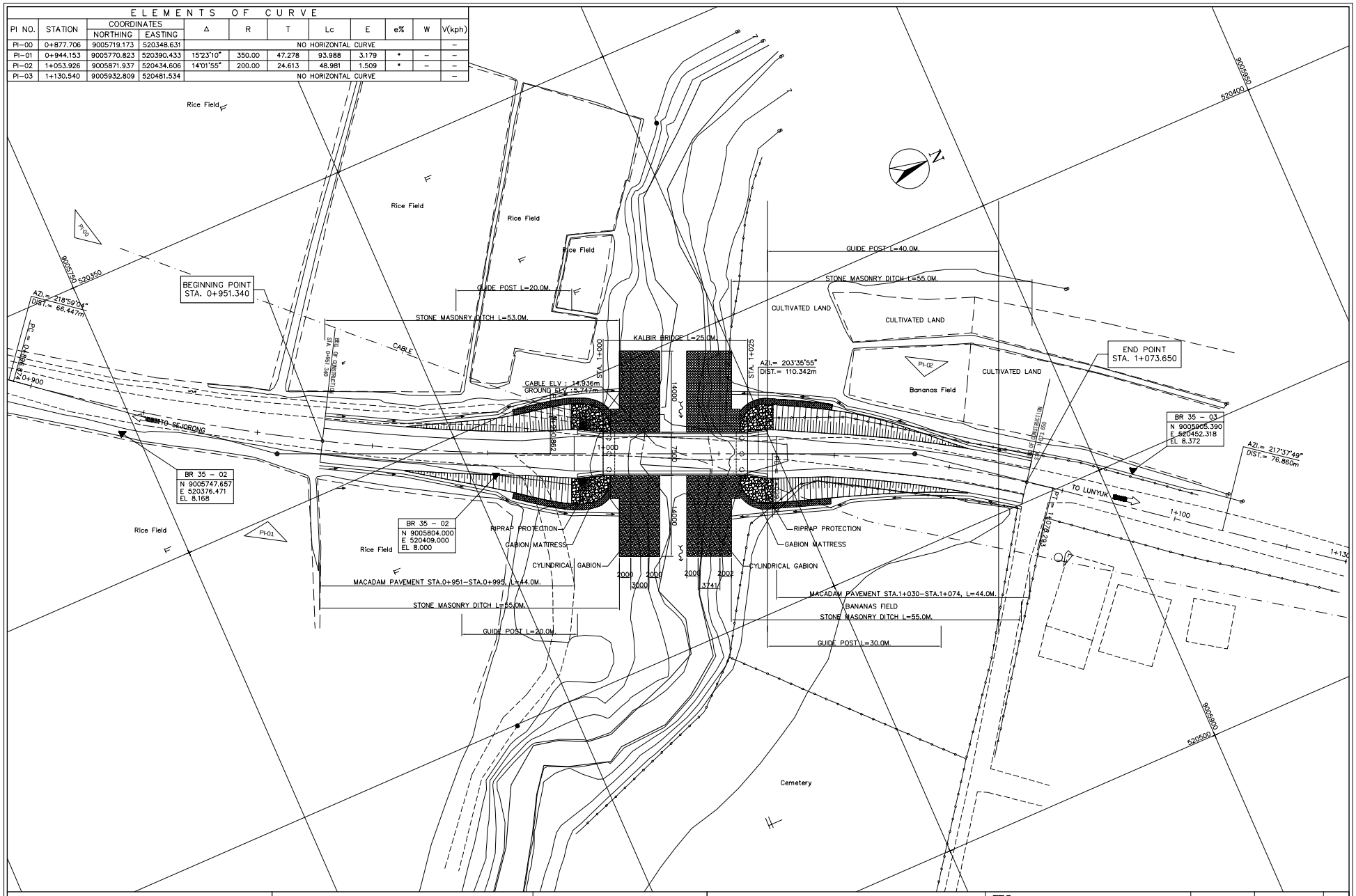

DIRECTORATE GENERAL OF HIGHWAY MINISTRY OF PUBLIC WORKS THE REPUBLIC OF INDONESIA	JICA JAPAN INTERNATIONAL COOPERATION AGENCY	KATAHIRA & ENGINEERS INTERNATIONAL	THE PREPARATORY SURVEY ON THE PROJECT FOR CONSTRUCTION OF BRIDGES IN THE PROVINCE OF NUSA TENGGARA BARAT, PHASE-3 IN THE REPUBLIC OF INDONESIA	TITLE : BR-35 KALBIR BRIDGE GENERAL SITE PLAN	SCALE : 1:600	DRAWING No: 10-1 Rev.

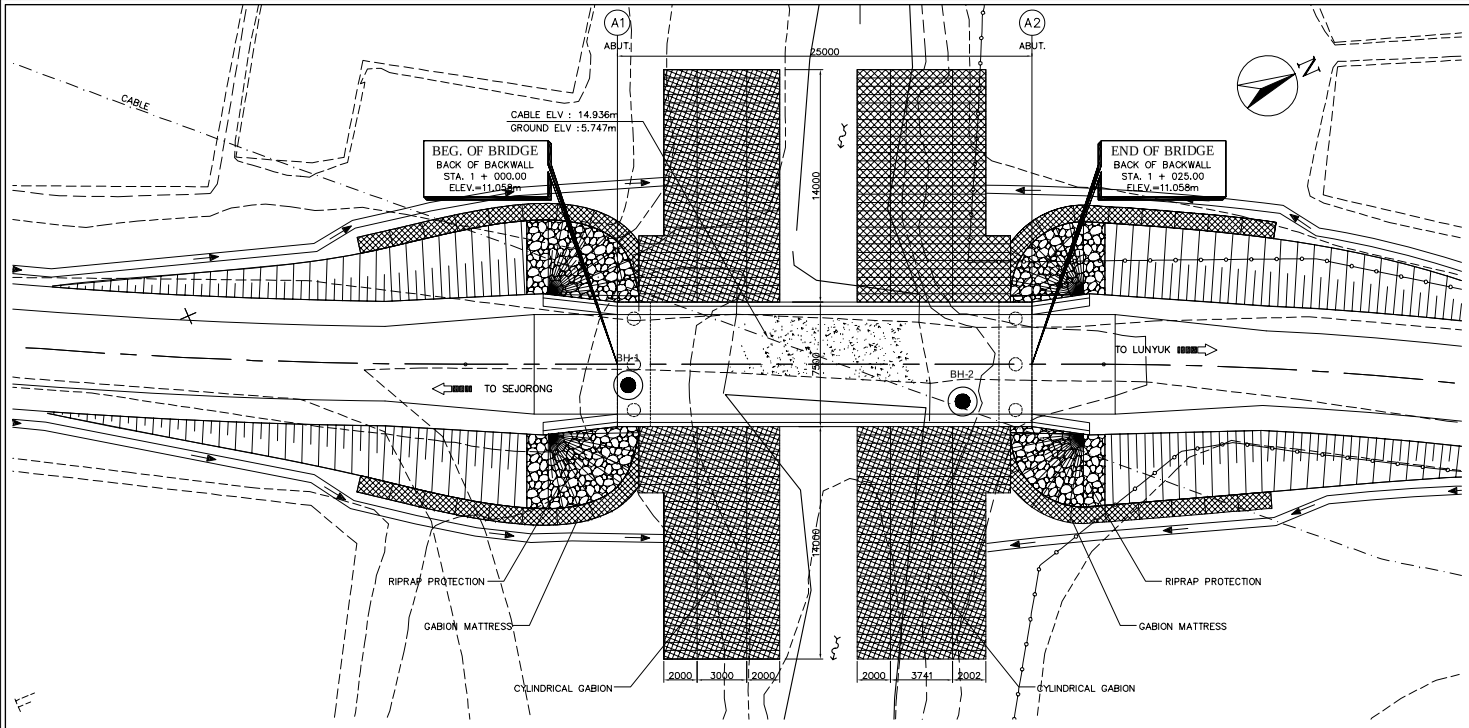

1 GENERAL PLAN
SCALE 1:300

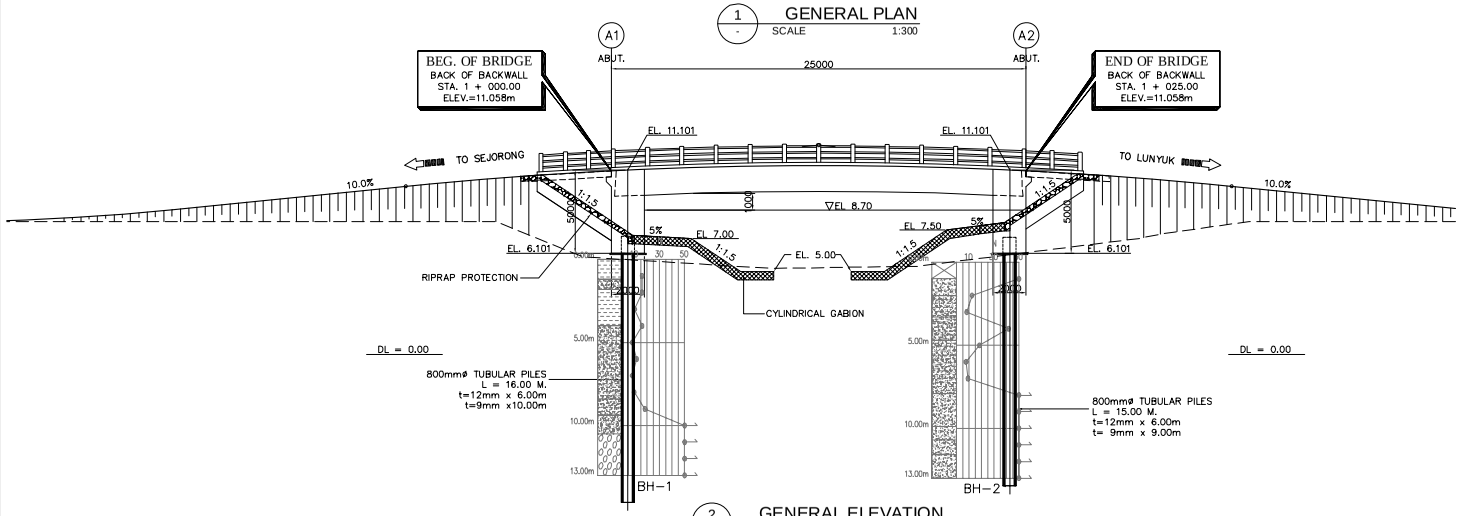

2 GENERAL ELEVATION
SCALE 1:300

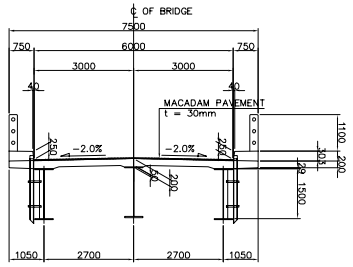

3 SECTION @ MIDSPAN
SCALE 1:150

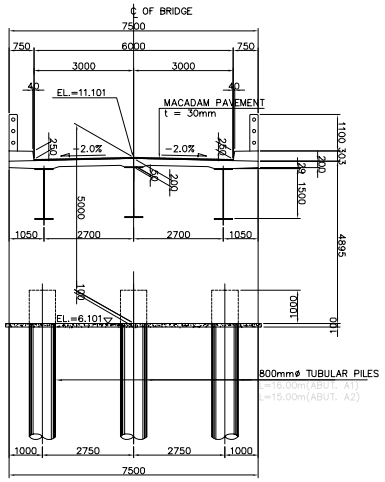

4 SECTION @ ABUTMENT
SCALE 1:150

DIRECTORATE GENERAL OF HIGHWAY MINISTRY OF PUBLIC WORKS THE REPUBLIC OF INDONESIA	JICA JAPAN INTERNATIONAL COOPERATION AGENCY	KATAHIRA & ENGINEERS INTERNATIONAL	THE PREPARATORY SURVEY ON THE PROJECT FOR CONSTRUCTION OF BRIDGES IN THE PROVINCE OF NUSA TENGGARA BARAT, PHASE-3 IN THE REPUBLIC OF INDONESIA	TITLE : BR-35 KALBIR BRIDGE GEN. PLAN, ELEVATION & SECTIONS	SCALE : AS SHOWN	DRAWING No: 10-2 Rev.

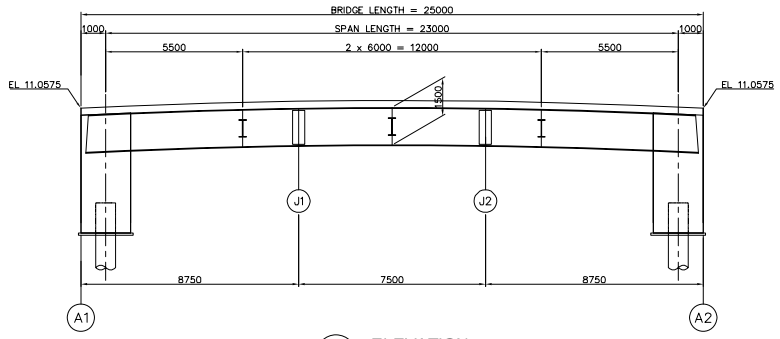

1 ELEVATION
SCALE 1:100

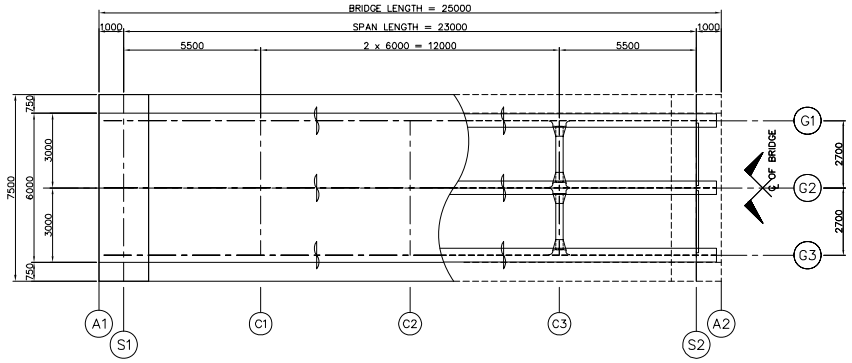

2 PLAN
SCALE 1:100

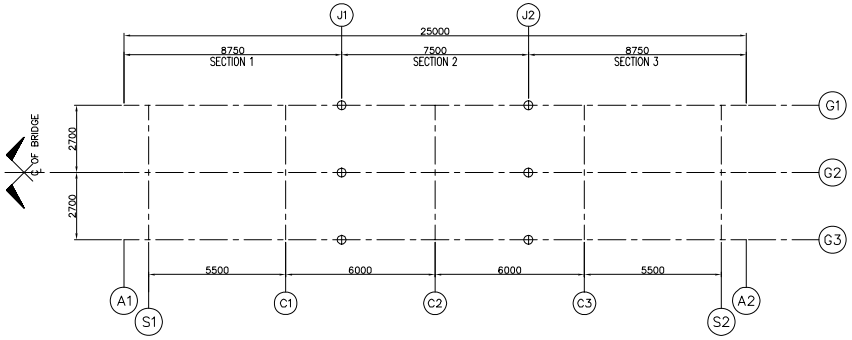

3 KEY PLAN
SCALE 1:100

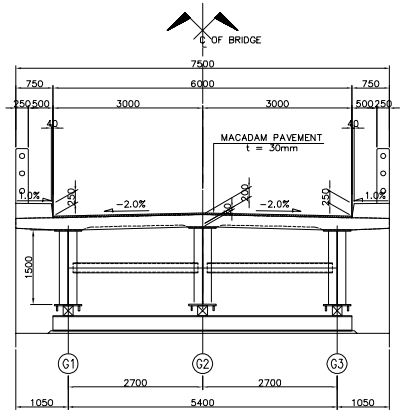

4 SECTION @ S1 & S2
SCALE 1:50

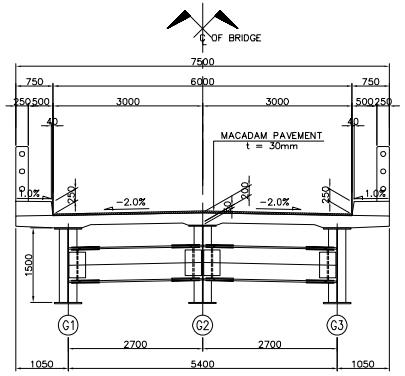

5 SECTION @ C1~C3
SCALE 1:50

DIRECTORATE GENERAL OF HIGHWAY MINISTRY OF PUBLIC WORKS THE REPUBLIC OF INDONESIA	JICA JAPAN INTERNATIONAL COOPERATION AGENCY	KATAHIRA & ENGINEERS INTERNATIONAL	THE PREPARATORY SURVEY ON THE PROJECT FOR CONSTRUCTION OF BRIDGES IN THE PROVINCE OF NUSA TENGGARA BARAT, PHASE-3 IN THE REPUBLIC OF INDONESIA	TITLE : BR-35 KALBIR BRIDGE GEN. DIM. OF SUPERSTRUCTURE	SCALE : AS SHOWN	DRAWING No: 10-3 Rev.

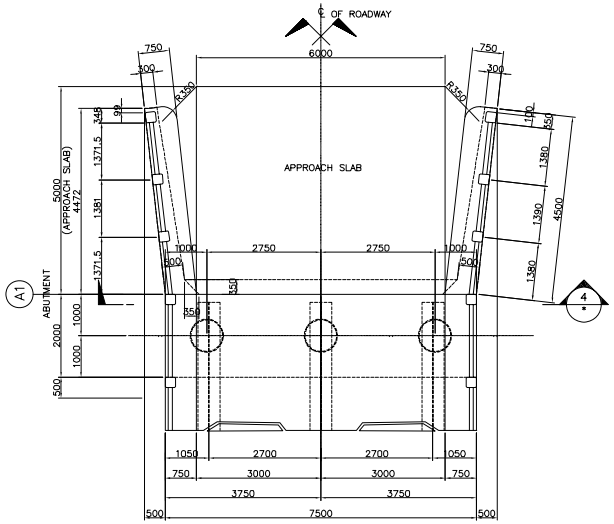

1 PLAN
SCALE 1:60

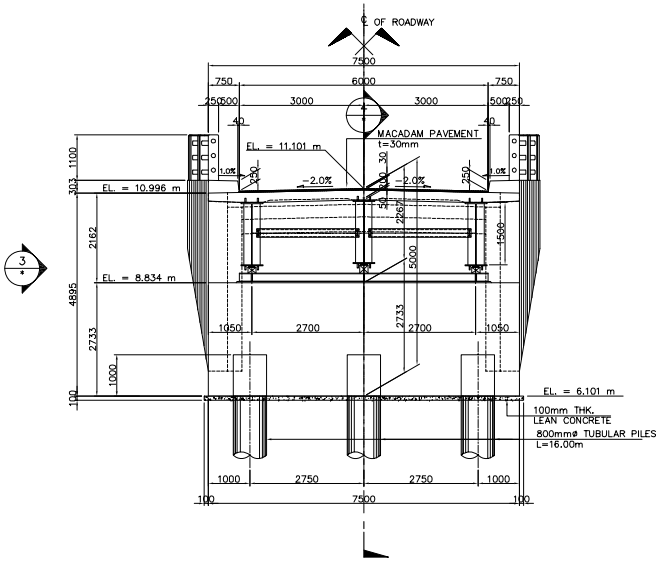

2 ELEVATION
SCALE 1:60

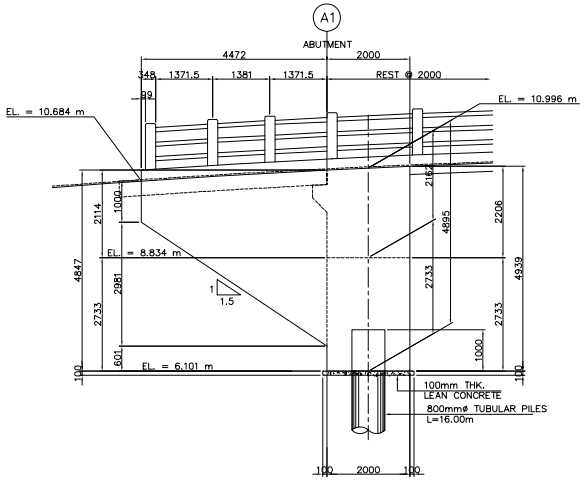

3 ELEVATION
SCALE 1:60

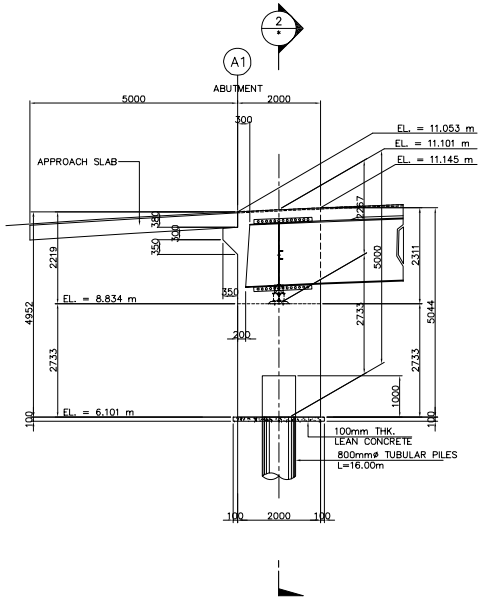

4 ELEVATION
SCALE 1:60

DIRECTORATE GENERAL OF HIGHWAY MINISTRY OF PUBLIC WORKS THE REPUBLIC OF INDONESIA	JICA JAPAN INTERNATIONAL COOPERATION AGENCY	KATAHIRA & ENGINEERS INTERNATIONAL	THE PREPARATORY SURVEY ON THE PROJECT FOR CONSTRUCTION OF BRIDGES IN THE PROVINCE OF NUSA TENGGARA BARAT, PHASE-3 IN THE REPUBLIC OF INDONESIA	TITLE: BR-35 KALBIR BRIDGE SUBSTRUCTURE STRUCTURAL DIMENSION (ABUTMENT A1)	SCALE: AS SHOWN	DRAWING No: 10-4 Rev.

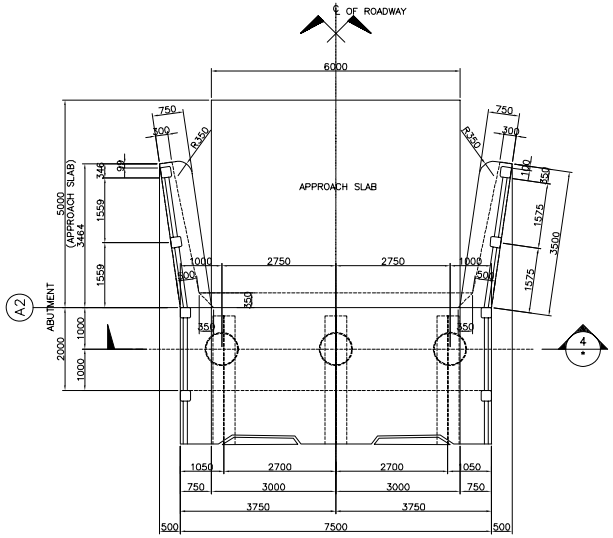

1 PLAN
SCALE 1:60

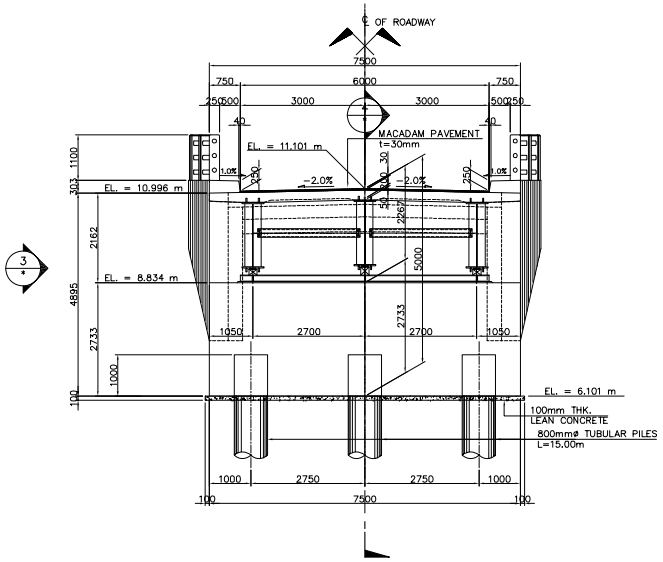

2 ELEVATION
SCALE 1:60

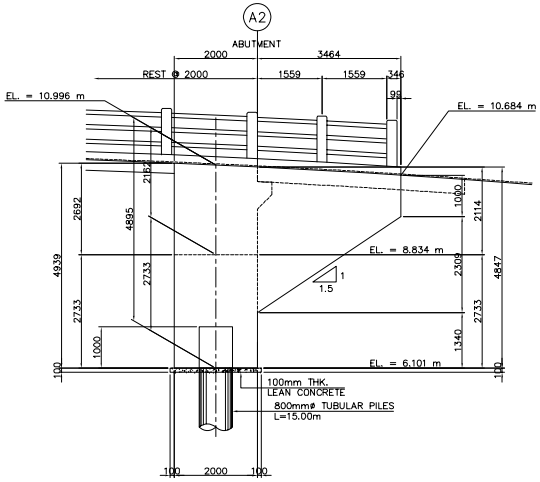

3 ELEVATION
SCALE 1:60

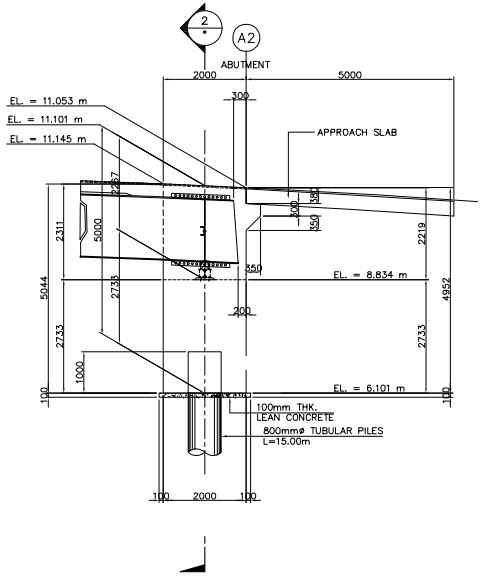

4 ELEVATION
SCALE 1:60

DIRECTORATE GENERAL OF HIGHWAY MINISTRY OF PUBLIC WORKS THE REPUBLIC OF INDONESIA	JICA JAPAN INTERNATIONAL COOPERATION AGENCY	KATAHIRA & ENGINEERS INTERNATIONAL	THE PREPARATORY SURVEY ON THE PROJECT FOR CONSTRUCTION OF BRIDGES IN THE PROVINCE OF NUSA TENGGARA BARAT, PHASE-3 IN THE REPUBLIC OF INDONESIA	TITLE : BR-35 KALBIR BRIDGE SUBSTRUCTURE STRUCTURAL DIMENSION (ABUTMENT A2)	SCALE : AS SHOWN	DRAWING No: 10-5 Rev.

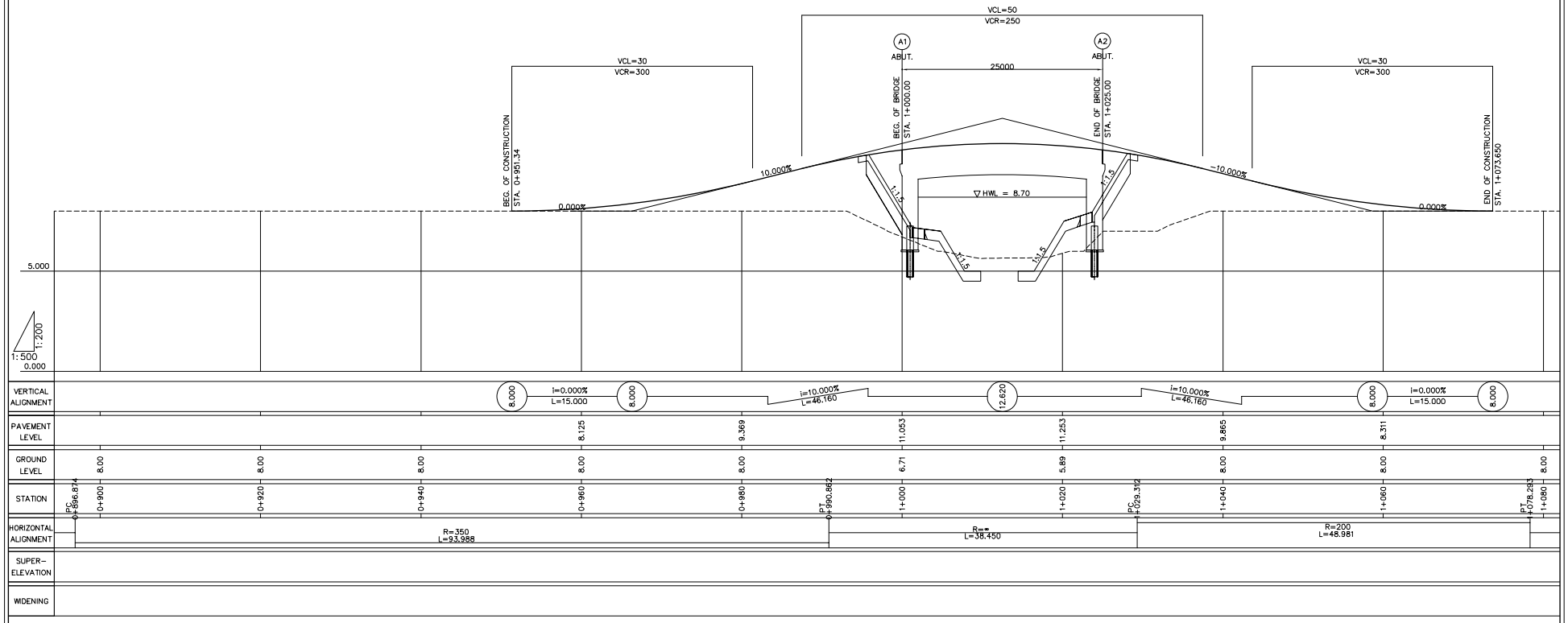

DIRECTORATE GENERAL OF HIGHWAY MINISTRY OF PUBLIC WORKS THE REPUBLIC OF INDONESIA	JICA JAPAN INTERNATIONAL COOPERATION AGENCY	KATAHIRA & ENGINEERS INTERNATIONAL	THE PREPARATORY SURVEY ON THE PROJECT FOR CONSTRUCTION OF BRIDGES IN THE PROVINCE OF NUSA TENGGARA BARAT, PHASE-3 IN THE REPUBLIC OF INDONESIA	TITLE : BR-35 KALBIR BRIDGE APPROACH ROAD PROFILE	SCALE : H = 1:500 V = 1:200	DRAWING No: 10-6 Rev.

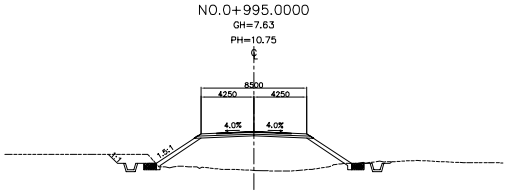

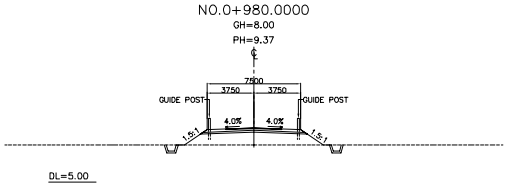

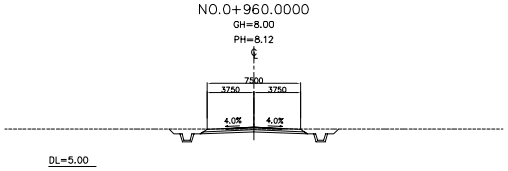

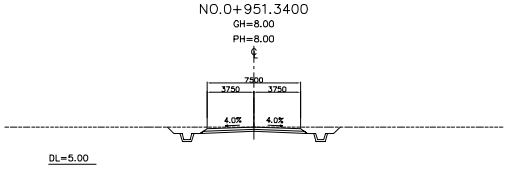

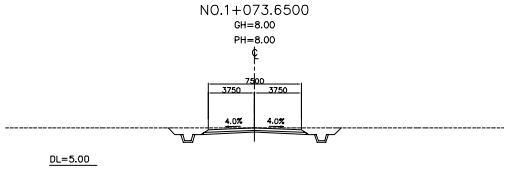

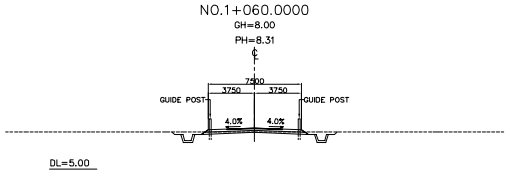

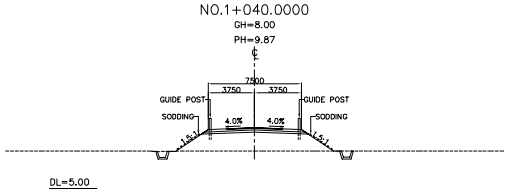

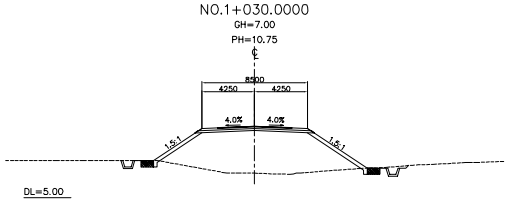

DIRECTORATE GENERAL OF HIGHWAY MINISTRY OF PUBLIC WORKS THE REPUBLIC OF INDONESIA	JAPAN INTERNATIONAL COOPERATION AGENCY	KATAHIRA & ENGINEERS INTERNATIONAL	THE PREPARATORY SURVEY ON THE PROJECT FOR CONSTRUCTION OF BRIDGES IN THE PROVINCE OF NUSA TENGGARA BARAT, PHASE-3 IN THE REPUBLIC OF INDONESIA	TITLE : BR-35 KALBIR BRIDGE APPROACH ROAD CROSS SECTIONS	SCALE : 1:400	DRAWING No: 10-7 Rev.