1. BR-13 MONE I BRIDGE

ELEMENTS OF CURVE											
PI NO.	STATION	COORDINATES		Δ	R	T	Lc	E	e%	W	V(kph)
		NORTHING	EASTING								
PI-00	0+910.565	8997085.440	499386.111	NO HORIZONTAL CURVE							–
PI-01	0+945.919	8997120.203	499379.671	73°47'01"	20.00	15.012	25.755	5.007	*	–	–
PI-02	0+982.968	8997138.775	499416.579	56°19'56"	30.00	16.063	29.495	4.030	*	–	–
PI-03	1+038.937	8997109.813	499467.521	15°00'56"	100.00	13.179	26.207	0.865	*	–	–
PI-04	1+101.128	8997066.011	499511.883	NO HORIZONTAL CURVE							–

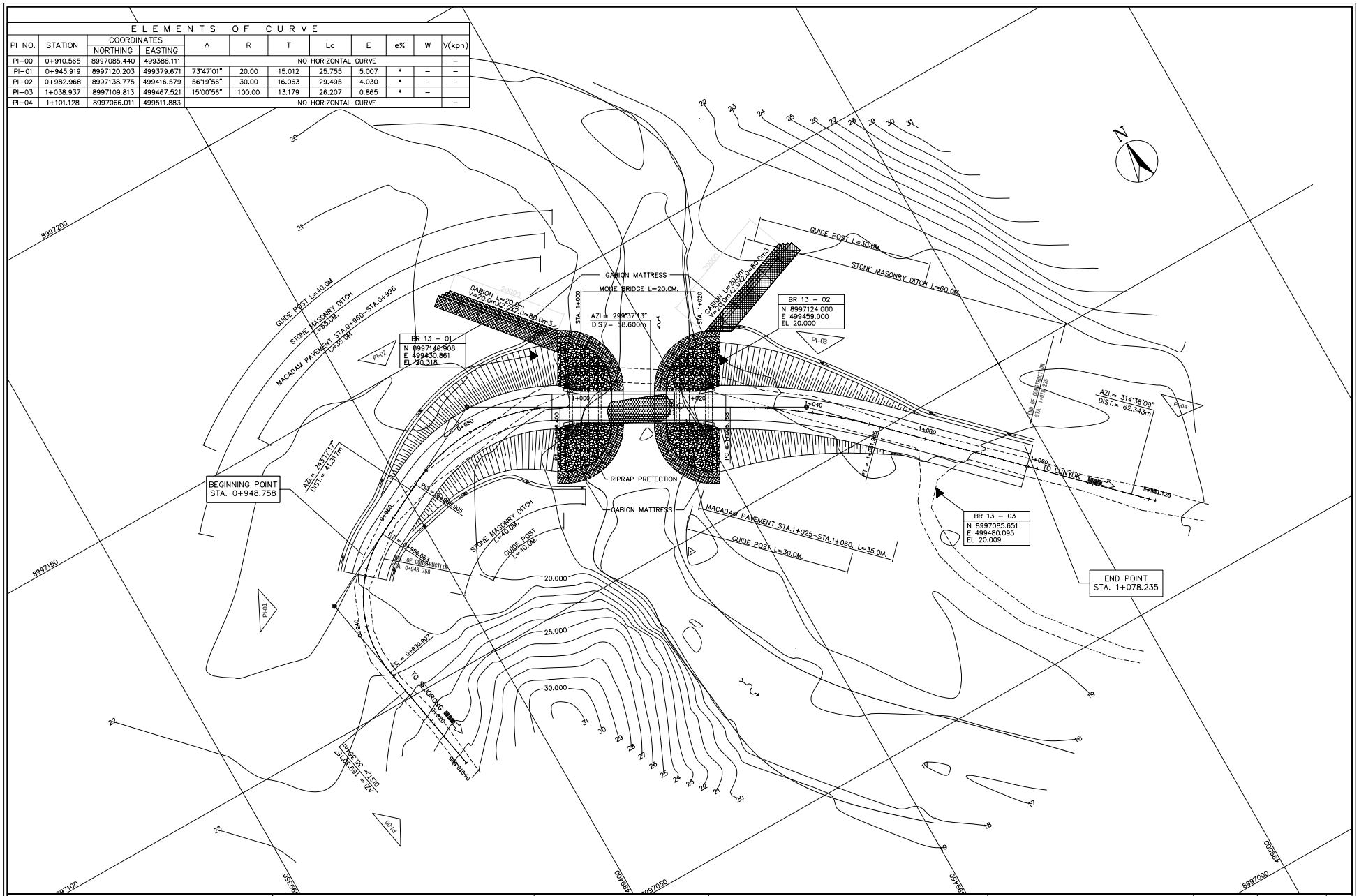

DIRECTORATE GENERAL OF HIGHWAY MINISTRY OF PUBLIC WORKS THE REPUBLIC OF INDONESIA	JICA JAPAN INTERNATIONAL COOPERATION AGENCY	KATAHIRA & ENGINEERS INTERNATIONAL	THE PREPARATORY SURVEY ON THE PROJECT FOR CONSTRUCTION OF BRIDGES IN THE PROVINCE OF NUSA TENGGARA BARAT, PHASE-3 IN THE REPUBLIC OF INDONESIA	TITLE : BR-13 MONE I BRIDGE GENERAL SITE PLAN	SCALE : AS SHOWN	DRAWING No: 1-1 Rev.

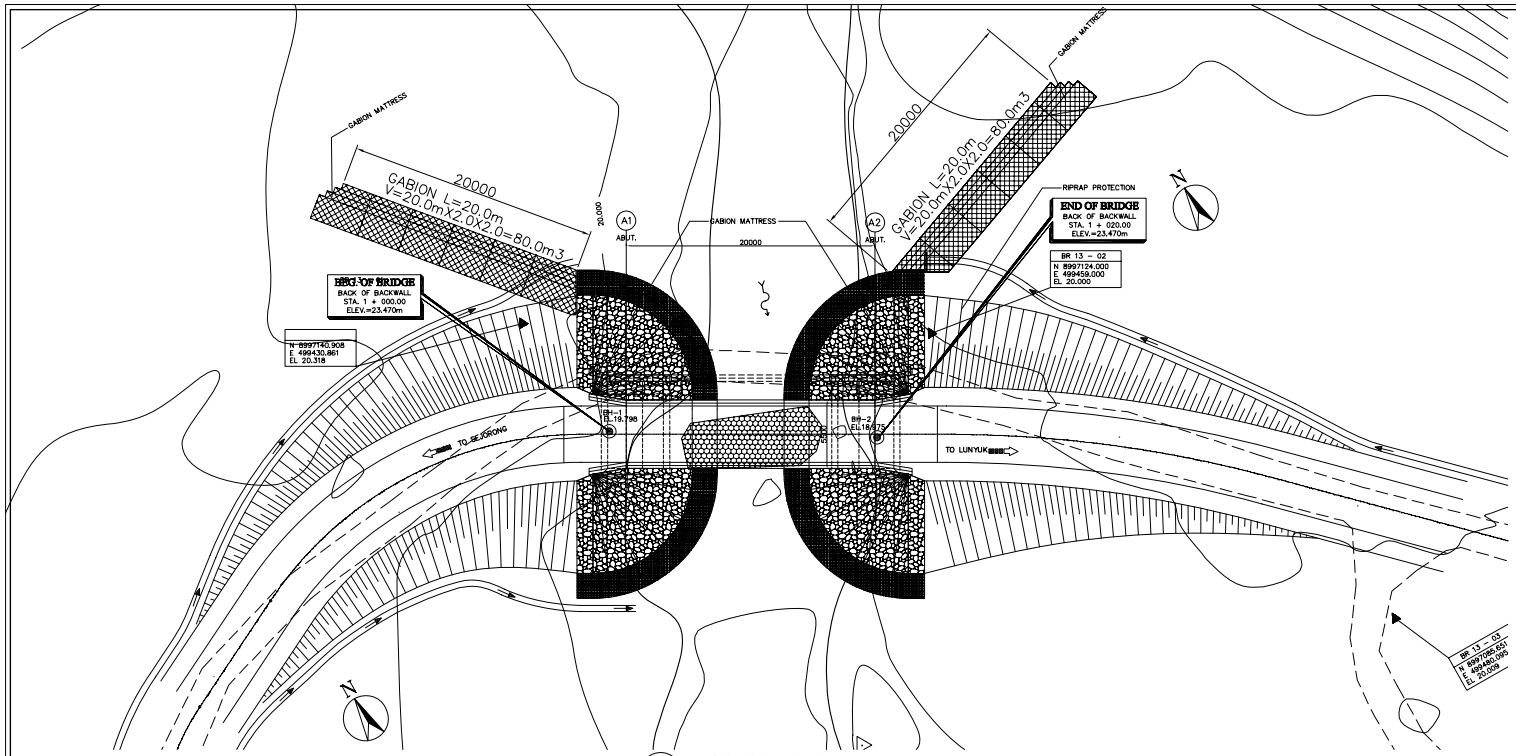

1 GENERAL PLAN
SCALE 1:400

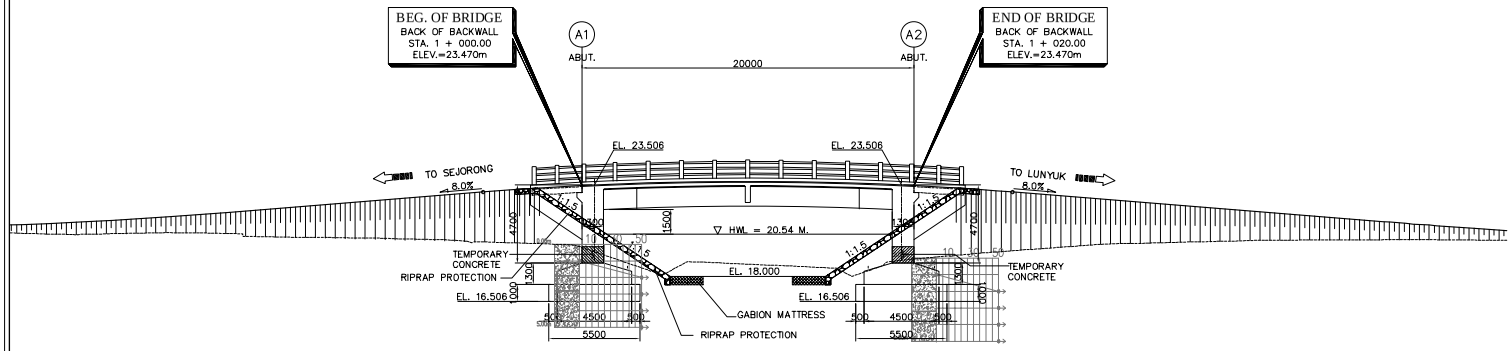

2 GENERAL ELEVATION
SCALE 1:300

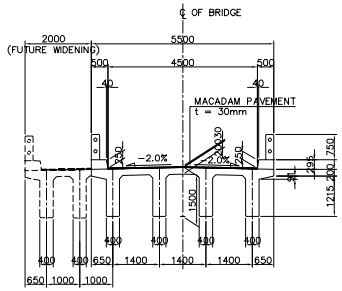

3 SECTION @ MIDSPAN
SCALE 1:150

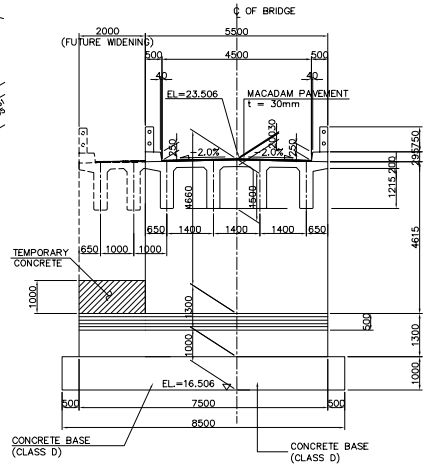

4 SECTION @ ABUTMENT
SCALE 1:150

NOTE:
The concrete base thickness shall be adjusted with the actual depth of the hard soil when excavated.

DIRECTORATE GENERAL OF HIGHWAY MINISTRY OF PUBLIC WORKS THE REPUBLIC OF INDONESIA	JICA JAPAN INTERNATIONAL COOPERATION AGENCY	KATAHIRA & ENGINEERS INTERNATIONAL	THE PREPARATORY SURVEY ON THE PROJECT FOR CONSTRUCTION OF BRIDGES IN THE PROVINCE OF NUSA TENGGARA BARAT, PHASE-3 IN THE REPUBLIC OF INDONESIA	TITLE : BR-13 MONE I BRIDGE GEN. PLAN, ELEVATION & SECTIONS	SCALE : AS SHOWN	DRAWING No: 1-2 Rev.

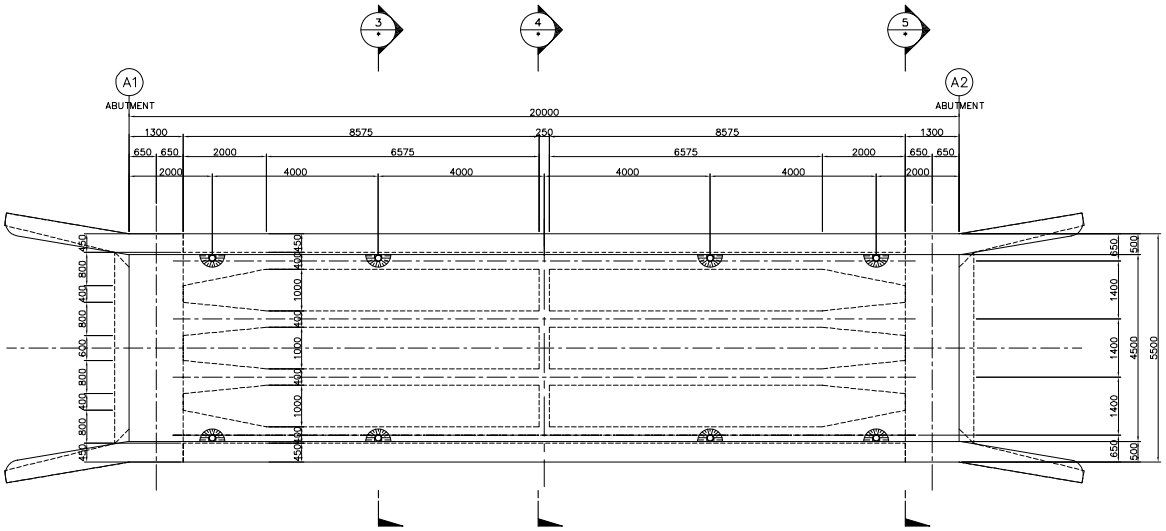

1 PLAN
SCALE 1:60

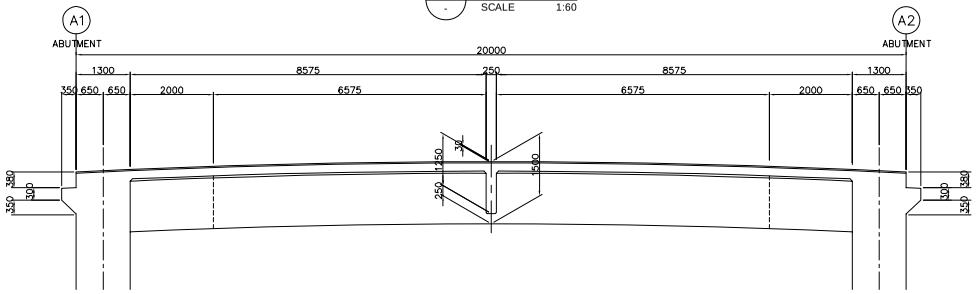

2 ELEVATION
SCALE 1:60

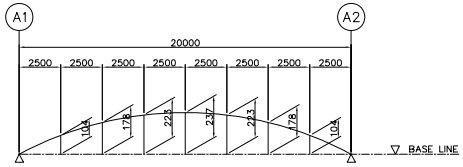

6 CAMBER DIAGRAM
NOT TO SCALE

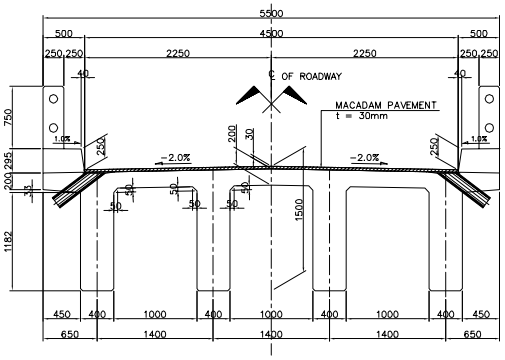

3 SECTION
SCALE 1:30

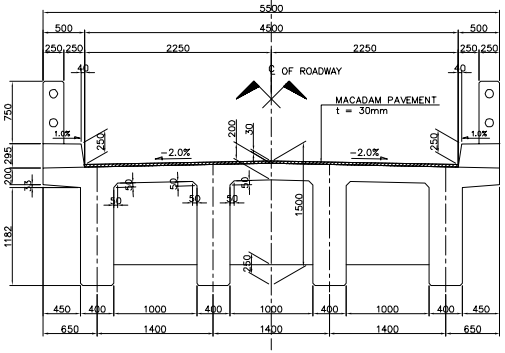

4 SECTION
SCALE 1:30

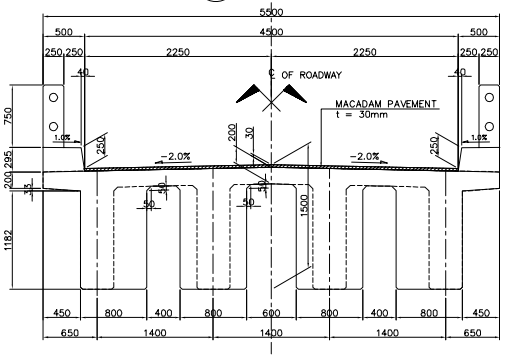

5 SECTION
SCALE 1:30

DIRECTORATE GENERAL OF HIGHWAY MINISTRY OF PUBLIC WORKS THE REPUBLIC OF INDONESIA	JICA JAPAN INTERNATIONAL COOPERATION AGENCY	KATAHIRA & ENGINEERS INTERNATIONAL	THE PREPARATORY SURVEY ON THE PROJECT FOR CONSTRUCTION OF BRIDGES IN THE PROVINCE OF NUSA TENGGARA BARAT, PHASE-3 IN THE REPUBLIC OF INDONESIA	TITLE: BR-13 MONE BRIDGE SUPERSTRUCTURE STRUCTURAL DIMENSION	SCALE: AS SHOWN	DRAWING No: 1-3 Rev.

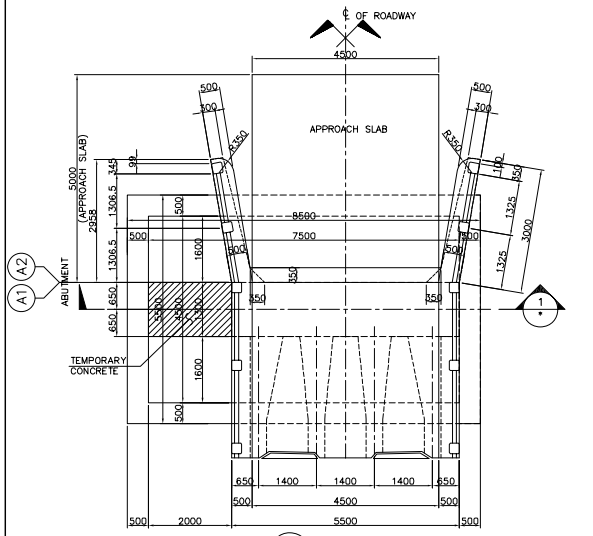

2 PLAN
SCALE 1:60

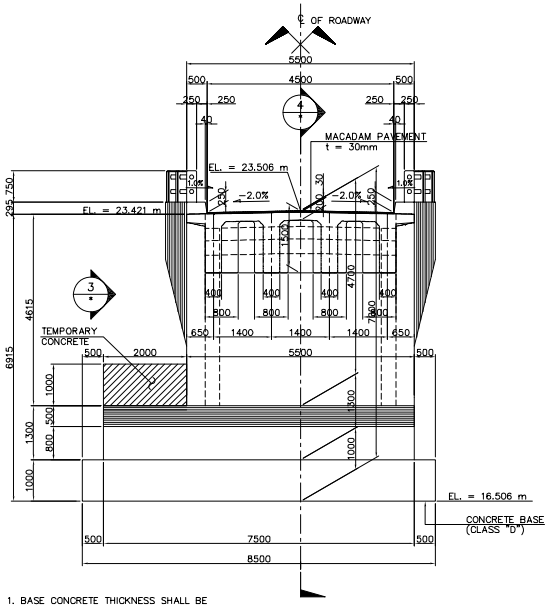

NOTE: 1. BASE CONCRETE THICKNESS SHALL BE ADJUSTED WITH ACTUAL DEPTH OF THE HARD SOIL WHEN EXCAVATED.
2. TOP OF BASE CONCRETE SHALL BE ROUGHENED WITH SHEAR KEYS.

1 ELEVATION
SCALE 1:60

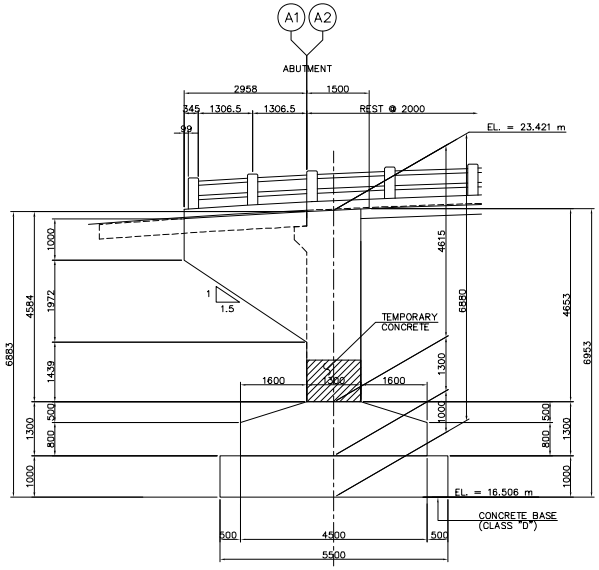

3 ELEVATION
SCALE 1:60

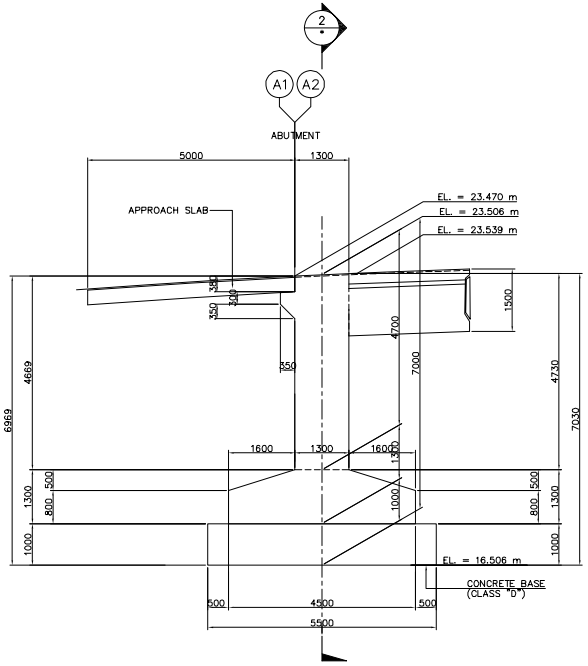

4 ELEVATION
SCALE 1:60

DIRECTORATE GENERAL OF HIGHWAY MINISTRY OF PUBLIC WORKS THE REPUBLIC OF INDONESIA	JICA JAPAN INTERNATIONAL COOPERATION AGENCY	KATAHIRA & ENGINEERS INTERNATIONAL	THE PREPARATORY SURVEY ON THE PROJECT FOR CONSTRUCTION OF BRIDGES IN THE PROVINCE OF NUSA TENGGARA BARAT, PHASE-3 IN THE REPUBLIC OF INDONESIA	TITLE: BR - 13 MONE BRIDGE SUBSTRUCTURE STRUCTURAL DIMENSION (ABUT. A1 AND A2)	SCALE: AS SHOWN	DRAWING No: 1-4 Rev.

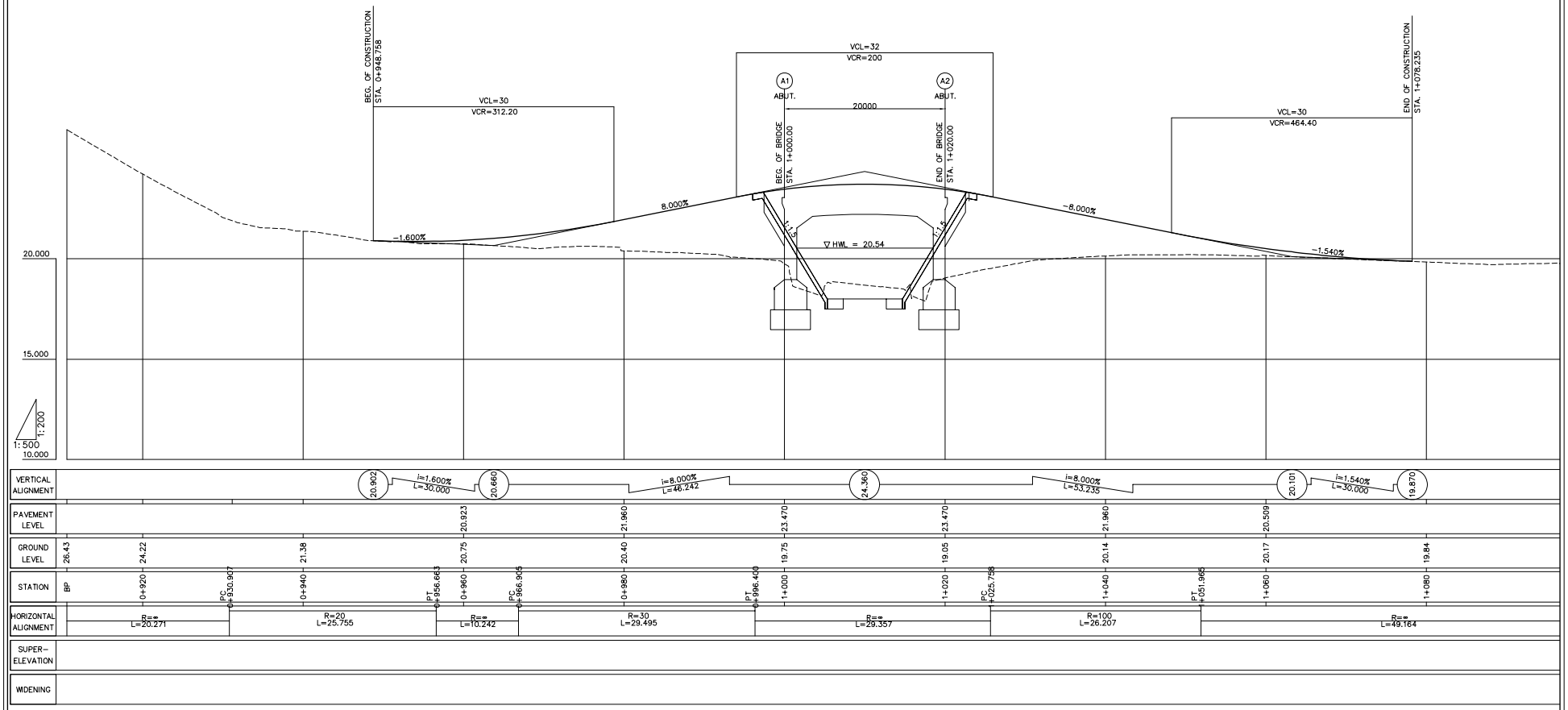

DIRECTORATE GENERAL OF HIGHWAY MINISTRY OF PUBLIC WORKS THE REPUBLIC OF INDONESIA	JICA JAPAN INTERNATIONAL COOPERATION AGENCY	KATAHIRA & ENGINEERS INTERNATIONAL	THE PREPARATORY SURVEY ON THE PROJECT FOR CONSTRUCTION OF BRIDGES IN THE PROVINCE OF NUSA TENGGARA BARAT, PHASE-3 IN THE REPUBLIC OF INDONESIA	TITLE : BR-13 MONE I BRIDGE APPROACH ROAD PROFILE	SCALE : H = 1:500 V = 1:200	DRAWING No: 1-5 Rev.

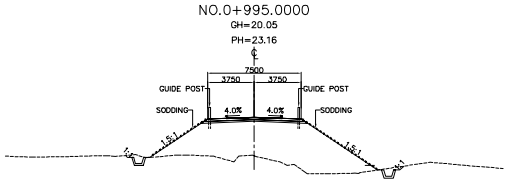

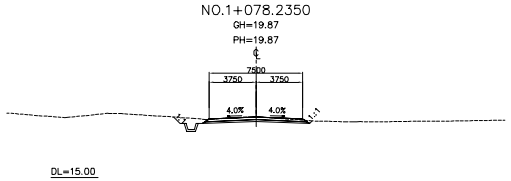

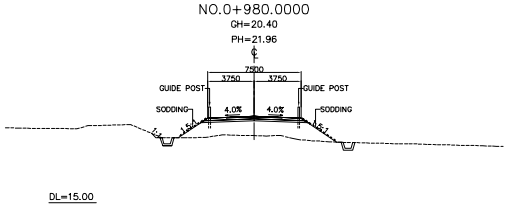

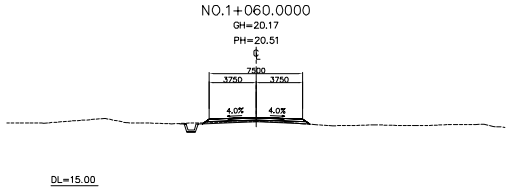

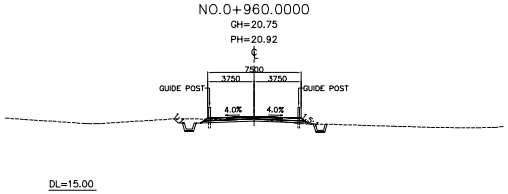

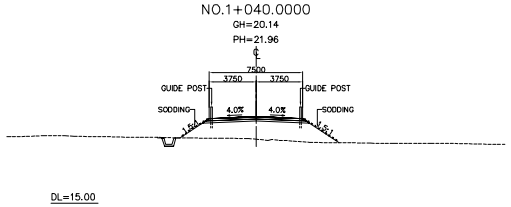

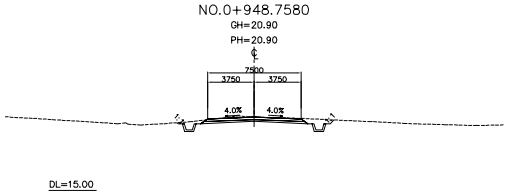

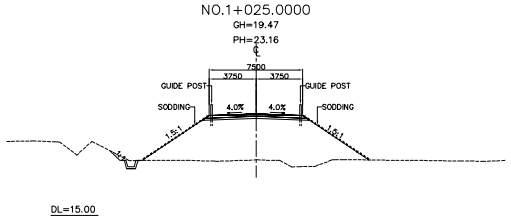

DIRECTORATE GENERAL OF HIGHWAY MINISTRY OF PUBLIC WORKS THE REPUBLIC OF INDONESIA	JICA JAPAN INTERNATIONAL COOPERATION AGENCY	KATAHIRA & ENGINEERS INTERNATIONAL	THE PREPARATORY SURVEY ON THE PROJECT FOR CONSTRUCTION OF BRIDGES IN THE PROVINCE OF NUSA TENGGARA BARAT, PHASE-3 IN THE REPUBLIC OF INDONESIA	TITLE : BR-13 MONE I BRIDGE APPROACH ROAD CROSS SECTIONS	SCALE : 1:400	DRAWING No: 1-6 Rev.

2. BR-16 TELONANG I BRIDGE

ELEMENTS OF CURVE											
PI NO.	STATION	COORDINATES		Δ	R	T	Lc	E	e%	W	V(kph)
		NORTHING	EASTING								
PI-00	0+945.81	8995256.064	502022.999	NO HORIZONTAL CURVE							–
PI-01	1+068.05	8995174.900	502114.405	65°04'25"	20.00	12.759	22.715	3.723	*	–	–
PI-02	1+105.62	8995190.977	502151.432	28°56'00"	30.00	7.740	15.149	0.982	*	–	–
PI-03	1+128.62	8995188.755	502174.659	NO HORIZONTAL CURVE							–

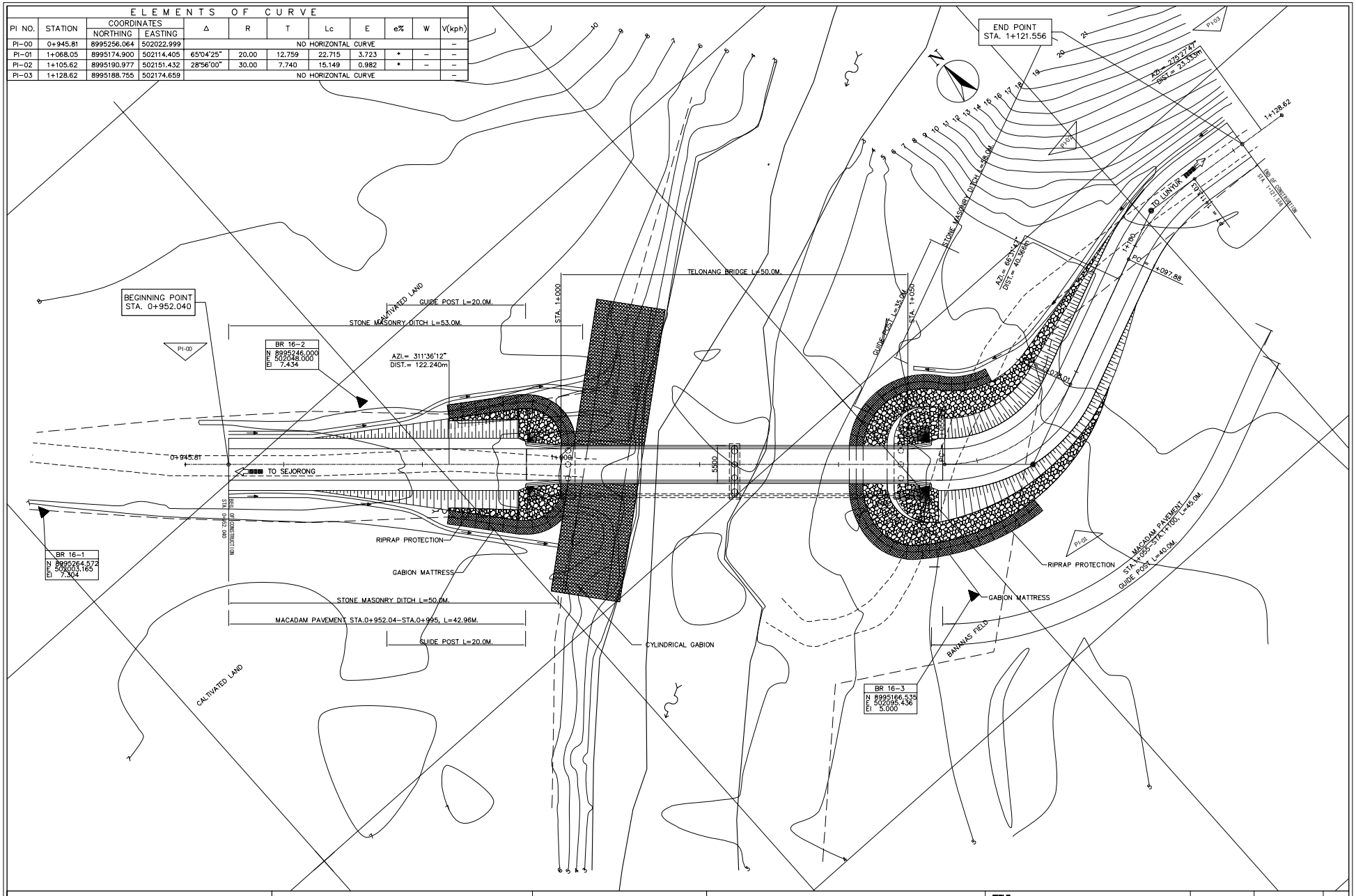

DIRECTORATE GENERAL OF HIGHWAY MINISTRY OF PUBLIC WORKS THE REPUBLIC OF INDONESIA	JICA JAPAN INTERNATIONAL COOPERATION AGENCY	KEI KATAHIRA & ENGINEERS INTERNATIONAL	THE PREPARATORY SURVEY ON THE PROJECT FOR CONSTRUCTION OF BRIDGES IN THE PROVINCE OF NUSA TENGGARA BARAT, PHASE-3 IN THE REPUBLIC OF INDONESIA	TITLE : BR-16 TELONANG I BRIDGE GENERAL SITE PLAN	SCALE : 1:500	DRAWING No: 2-1 Rev.

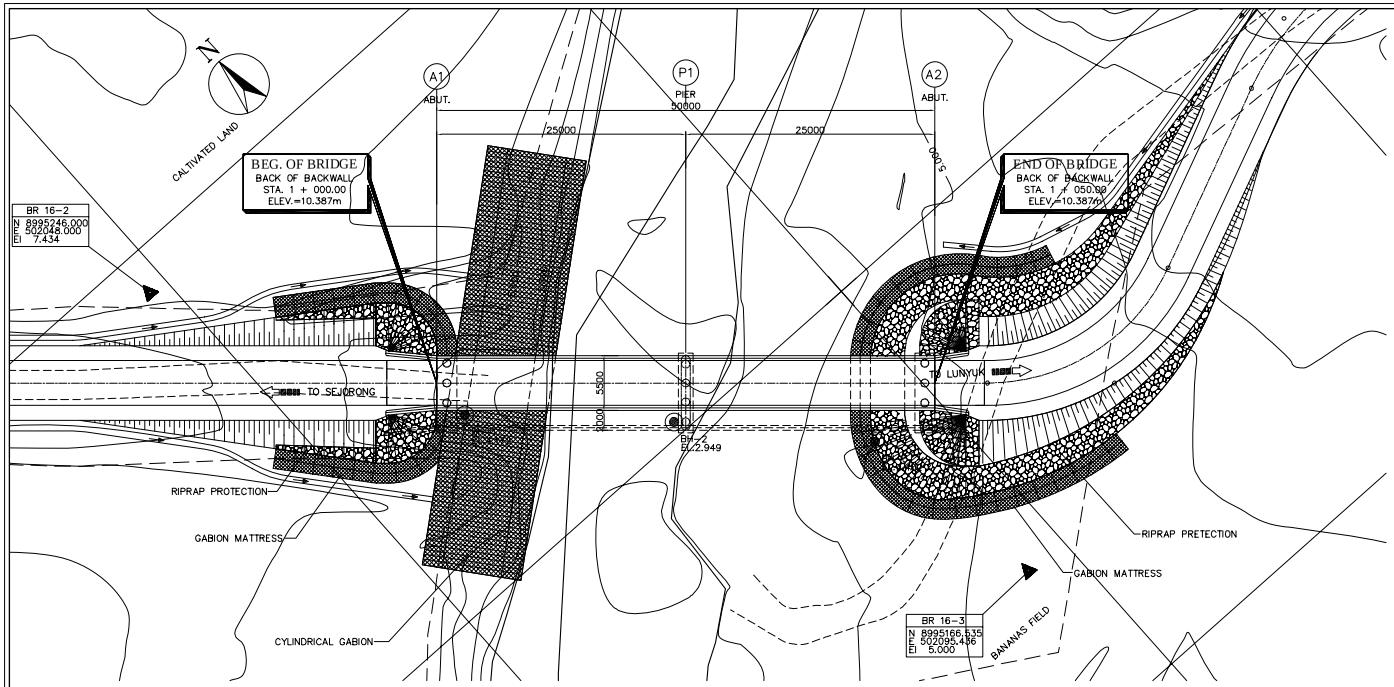

1 GENERAL PLAN
SCALE 1:500

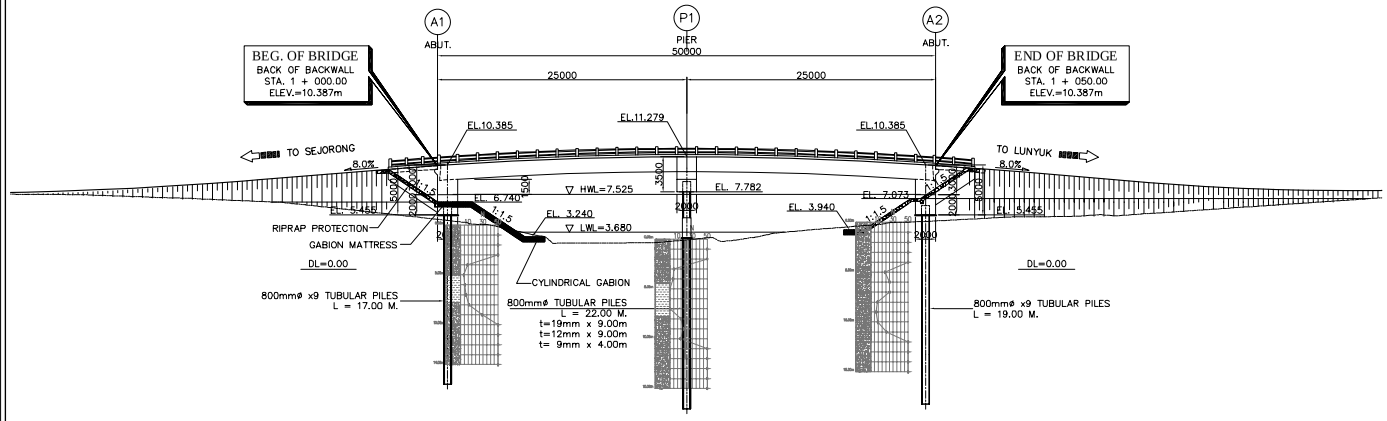

2 GENERAL ELEVATION
SCALE 1:500

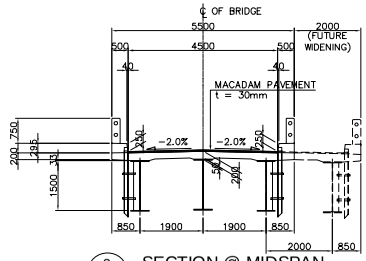

3 SECTION @ MIDSPAN
SCALE 1:150

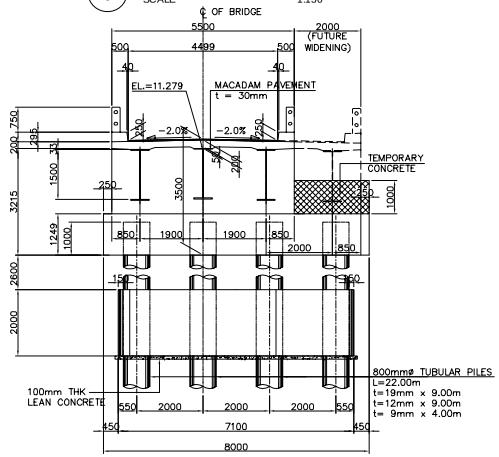

4 SECTION @ PIER
SCALE 1:150

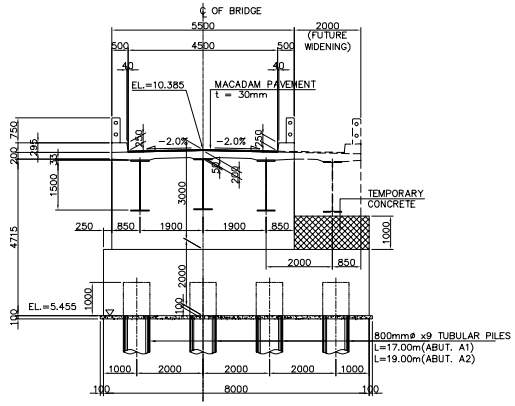

5 SECTION @ ABUTMENT
SCALE 1:150

DIRECTORATE GENERAL OF HIGHWAY MINISTRY OF PUBLIC WORKS THE REPUBLIC OF INDONESIA	JICA JAPAN INTERNATIONAL COOPERATION AGENCY	KATAHIRA & ENGINEERS INTERNATIONAL	THE PREPARATORY SURVEY ON THE PROJECT FOR CONSTRUCTION OF BRIDGES IN THE PROVINCE OF NUSA TENGGARA BARAT, PHASE-3 IN THE REPUBLIC OF INDONESIA	TITLE : BR-16 TELONANG I BRIDGE GEN. PLAN, ELEVATION & SECTIONS	SCALE : AS SHOWN	DRAWING No: 2-2 Rev.

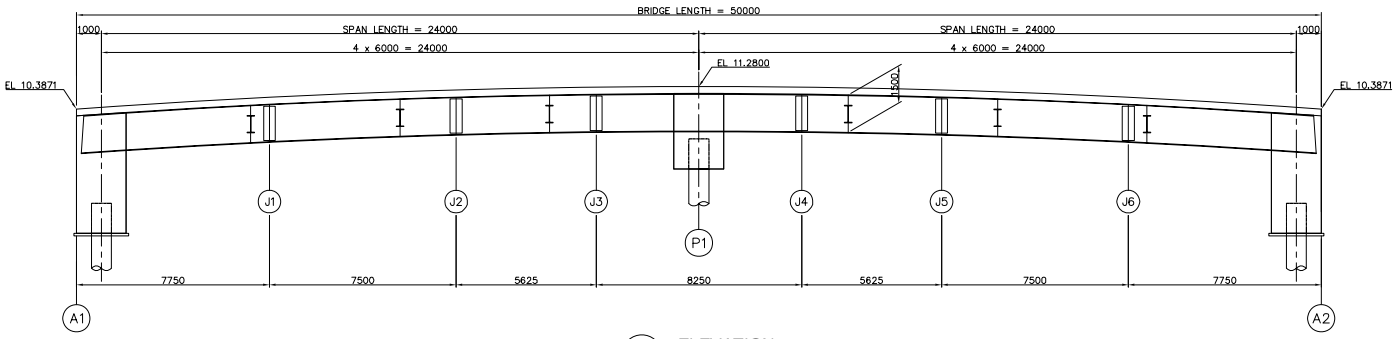

1 ELEVATION
SCALE 1:100

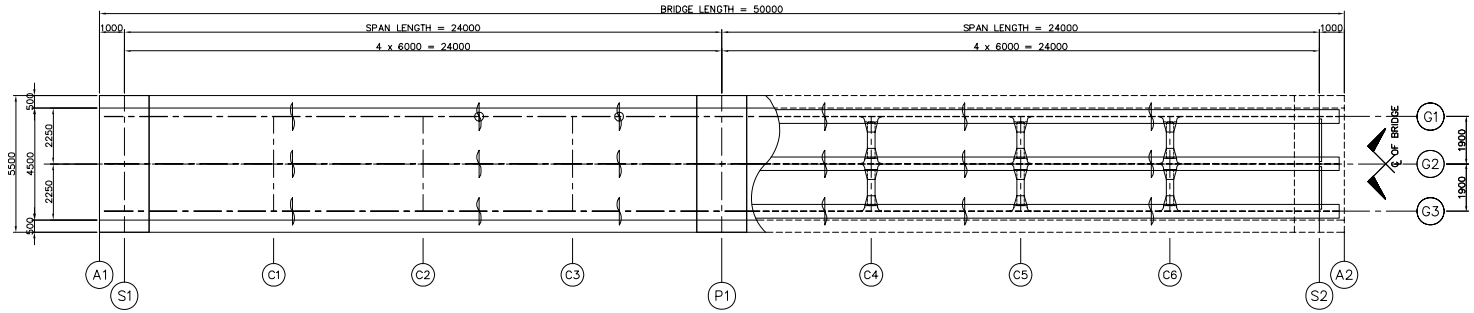

2 PLAN
SCALE 1:100

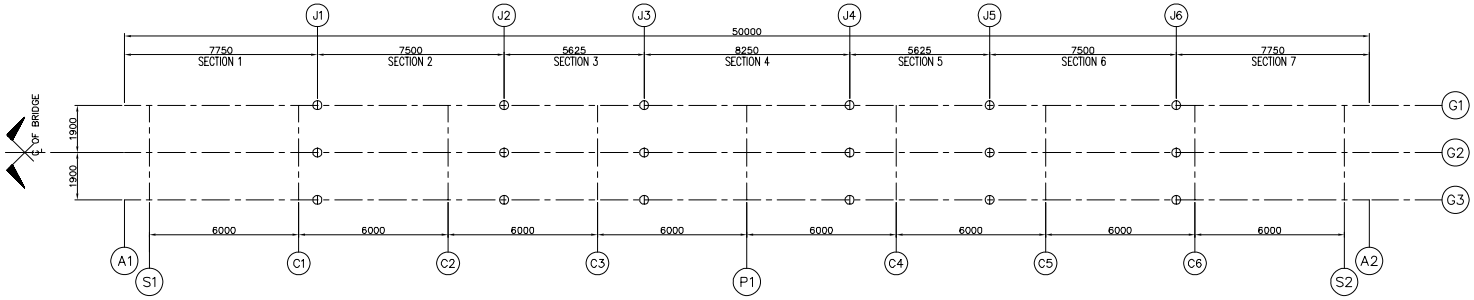

3 KEY PLAN
SCALE 1:100

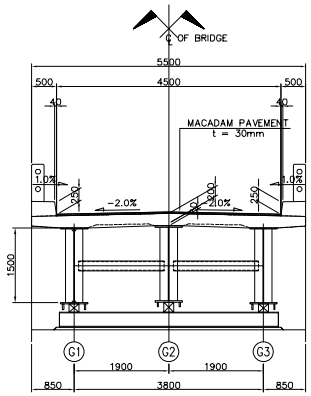

4 SECTION @ S1, P1 & S2
SCALE 1:50

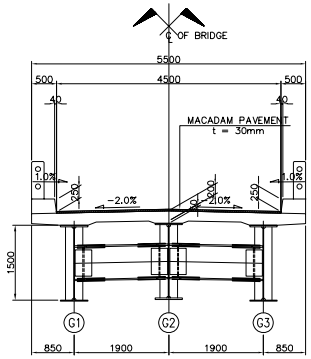

5 SECTION @ C1~C6
SCALE 1:50

DIRECTORATE GENERAL OF HIGHWAY MINISTRY OF PUBLIC WORKS THE REPUBLIC OF INDONESIA	JICA JAPAN INTERNATIONAL COOPERATION AGENCY	KATAHIRA & ENGINEERS INTERNATIONAL	THE PREPARATORY SURVEY ON THE PROJECT FOR CONSTRUCTION OF BRIDGES IN THE PROVINCE OF NUSA TENGGARA BARAT, PHASE-3 IN THE REPUBLIC OF INDONESIA	TITLE : BR-16 TELONANG BRIDGE GEN. DIM. OF SUPERSTRUCTURE	SCALE : AS SHOWN	DRAWING No: 2-3 Rev.

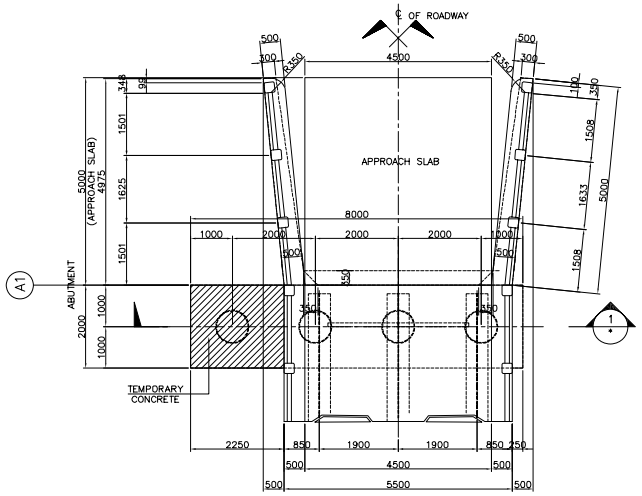

2 P L A N
SCALE 1:60

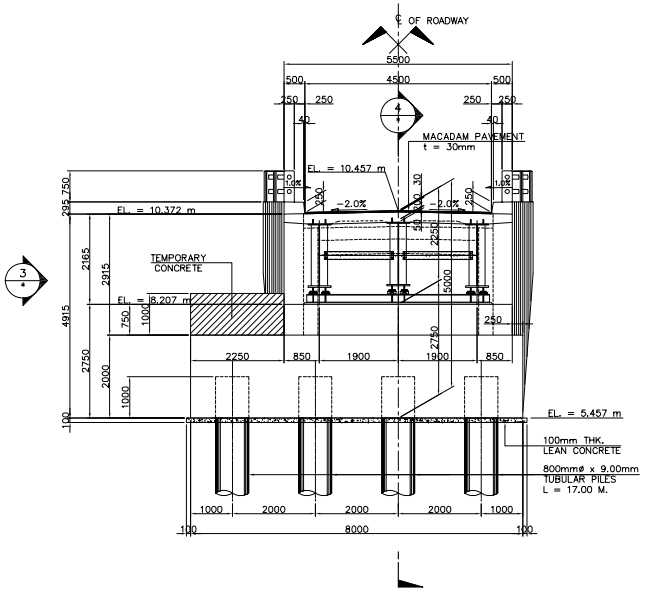

1 ELEVATION
SCALE 1:60

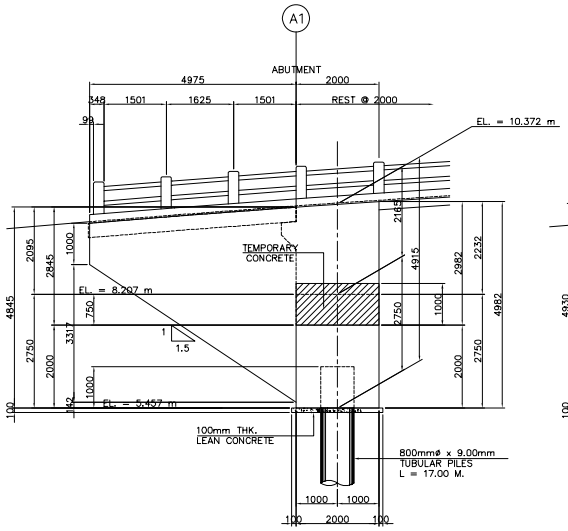

3 ELEVATION
SCALE 1:60

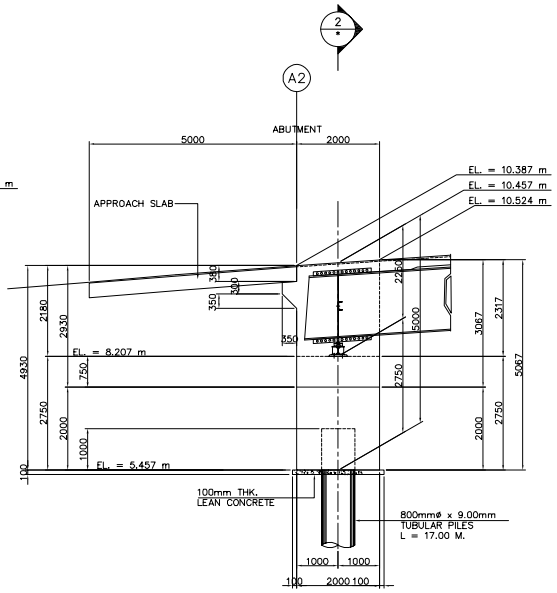

4 ELEVATION
SCALE 1:60

DIRECTORATE GENERAL OF HIGHWAY MINISTRY OF PUBLIC WORKS THE REPUBLIC OF INDONESIA	JICA JAPAN INTERNATIONAL COOPERATION AGENCY	KATAHIRA & ENGINEERS INTERNATIONAL	THE PREPARATORY SURVEY ON THE PROJECT FOR CONSTRUCTION OF BRIDGES IN THE PROVINCE OF NUSA TENGGARA BARAT, PHASE-3 IN THE REPUBLIC OF INDONESIA	TITLE : BR-16 TELONANG I BRIDGE SUBSTRUCTURE STRUCTURAL DIMENSION (ABUTMENT A1)	SCALE : AS SHOWN	DRAWING No: 2-4 Rev.

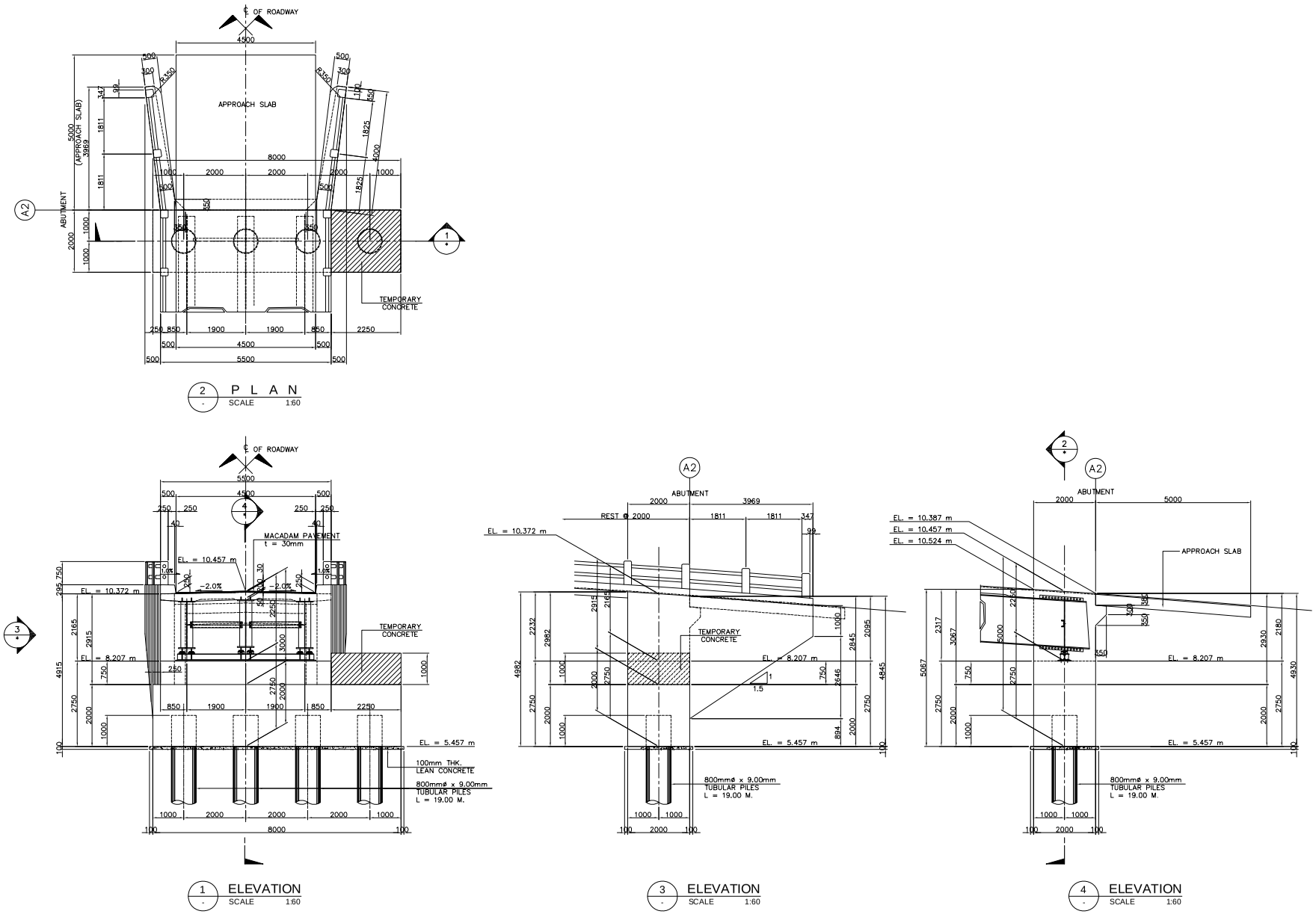

2 PLAN
SCALE 1:60

1 ELEVATION
SCALE 1:60

3 ELEVATION
SCALE 1:60

4 ELEVATION
SCALE 1:60

DIRECTORATE GENERAL OF HIGHWAY MINISTRY OF PUBLIC WORKS THE REPUBLIC OF INDONESIA	JICA JAPAN INTERNATIONAL COOPERATION AGENCY	KATAHIRA & ENGINEERS INTERNATIONAL	THE PREPARATORY SURVEY ON THE PROJECT FOR CONSTRUCTION OF BRIDGES IN THE PROVINCE OF NUSA TENGGARA BARAT, PHASE-3 IN THE REPUBLIC OF INDONESIA	TITLE : BR-16 TELONANG I BRIDGE SUBSTRUCTURE STRUCTURAL DIMENSION (ABUTMENT A2)	SCALE : AS SHOWN	DRAWING No: 2-5 Rev.

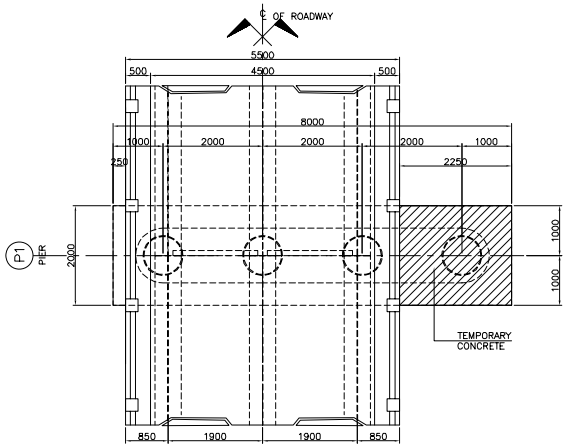

1 PLAN
SCALE 1:50

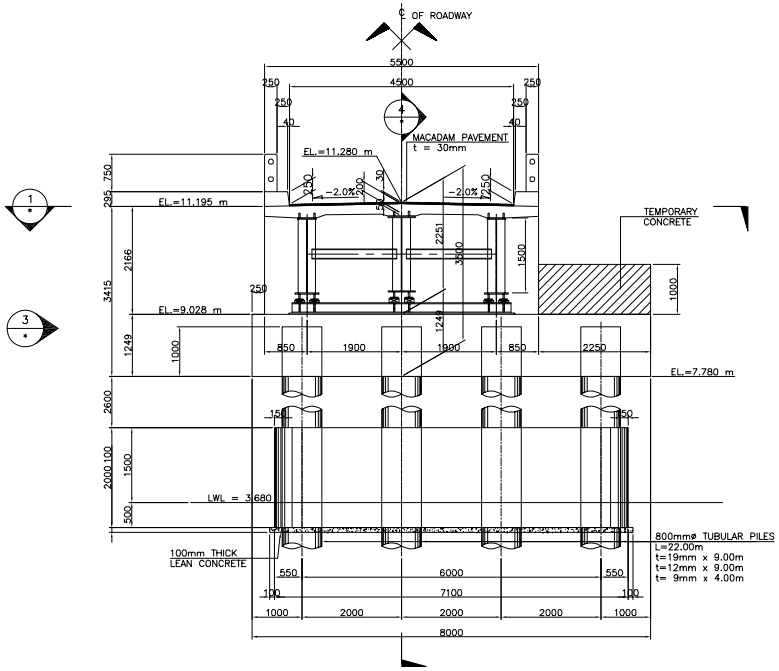

2 ELEVATION
SCALE 1:50

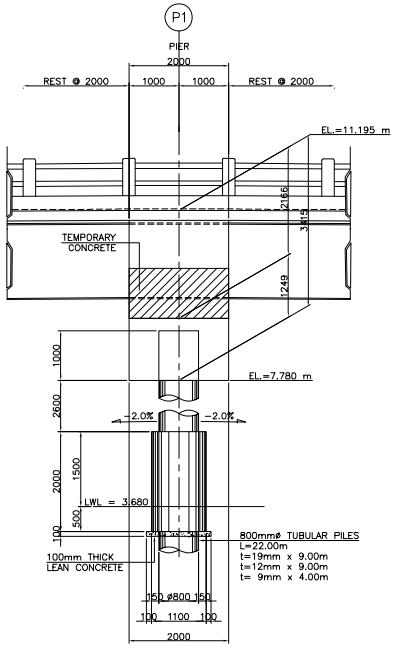

3 ELEVATION
SCALE 1:50

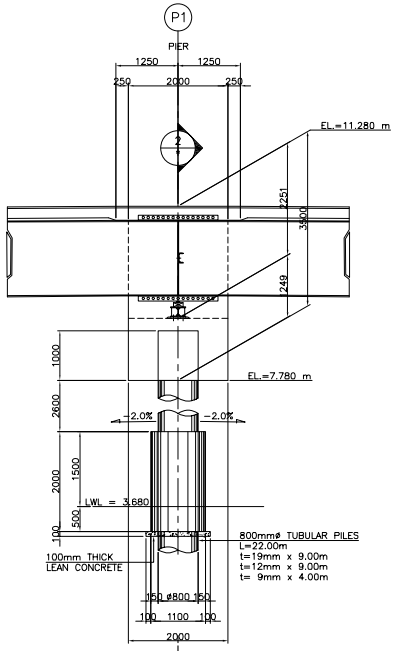

4 ELEVATION
SCALE 1:50

DIRECTORATE GENERAL OF HIGHWAY MINISTRY OF PUBLIC WORKS THE REPUBLIC OF INDONESIA	JICA JAPAN INTERNATIONAL COOPERATION AGENCY	KEI KATAHIRA & ENGINEERS INTERNATIONAL	THE PREPARATORY SURVEY ON THE PROJECT FOR CONSTRUCTION OF BRIDGES IN THE PROVINCE OF NUSA TENGGARA BARAT, PHASE-3 IN THE REPUBLIC OF INDONESIA	TITLE : BR-16 TELONANG 1 BRIDGE SUBSTRUCTURE STRUCTURAL DIMENSION (PIER P1)	SCALE : AS SHOWN	DRAWING No: 2-6 Rev.

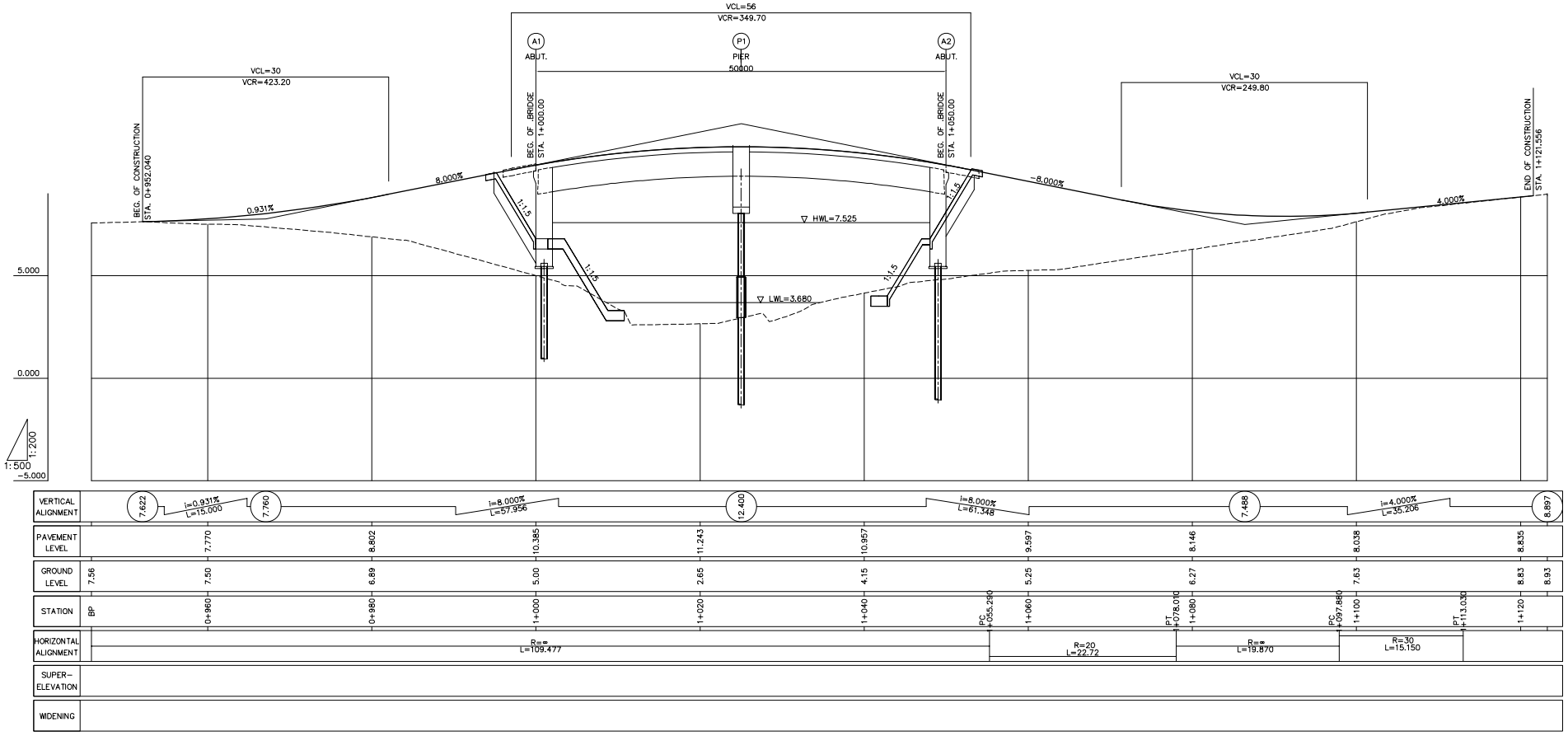

DIRECTORATE GENERAL OF HIGHWAY MINISTRY OF PUBLIC WORKS THE REPUBLIC OF INDONESIA	JICA JAPAN INTERNATIONAL COOPERATION AGENCY	KATAHIRA & ENGINEERS INTERNATIONAL	THE PREPARATORY SURVEY ON THE PROJECT FOR CONSTRUCTION OF BRIDGES IN THE PROVINCE OF NUSA TENGGARA BARAT, PHASE-3 IN THE REPUBLIC OF INDONESIA	TITLE : BR-16 TELONANG I BRIDGE APPROACH ROAD PROFILE	SCALE : H = 1:500 V = 1:200	DRAWING No: 2-7 Rev.

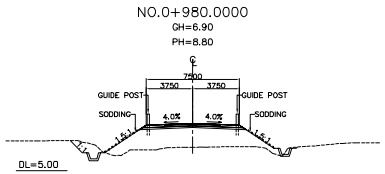

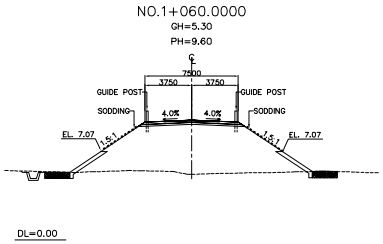

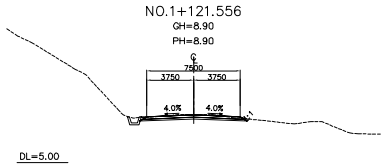

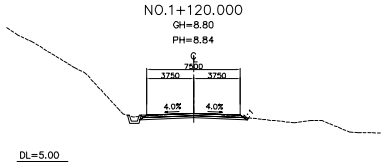

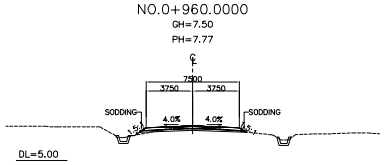

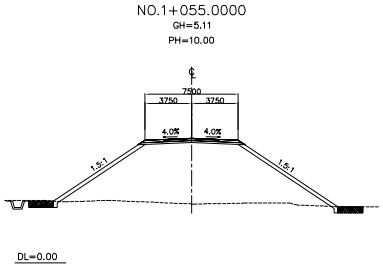

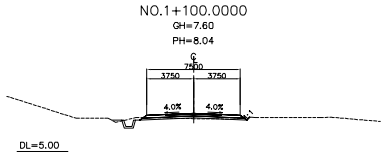

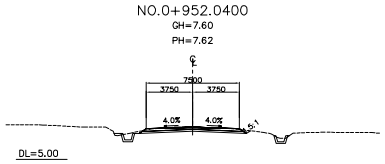

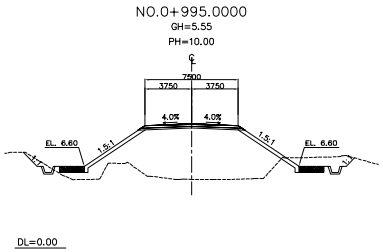

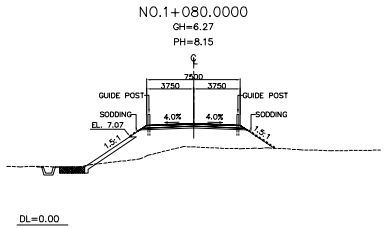

DIRECTORATE GENERAL OF HIGHWAY MINISTRY OF PUBLIC WORKS THE REPUBLIC OF INDONESIA	JICA JAPAN INTERNATIONAL COOPERATION AGENCY	KATAHIRA & ENGINEERS INTERNATIONAL	THE PREPARATORY SURVEY ON THE PROJECT FOR CONSTRUCTION OF BRIDGES IN THE PROVINCE OF NUSA TENGGARA BARAT, PHASE-3 IN THE REPUBLIC OF INDONESIA	TITLE : BR-16 TELONANG I BRIDGE APPROACH ROAD CROSS SECTIONS	SCALE : 1:400	DRAWING No: 2-8 Rev.

3. BR-19 SEPANG BRIDGE

ELEMENTS OF CURVE											
PI NO.	STATION	COORDINATES		Δ	R	T	Lc	E	e%	W	V(kph)
		NORTHING	EASTING								
PI-00	0+896.98	8995375.402	504624.017	NO HORIZONTAL CURVE							–
PI-01	0+924.55	8995366.599	504650.140	37°24'22"	50.00	16.927	32.643	2.788	*	–	–
PI-02	0+979.49	8995384.679	504703.300	62°00'36"	30.00	18.029	32.468	5.001	*	–	–
PI-03	1+062.71	8995325.220	504766.559	32°45'16"	50.00	14.694	28.584	2.115	*	–	–
PI-04	1+116.000	8995315.388	504819.750	NO HORIZONTAL CURVE							–

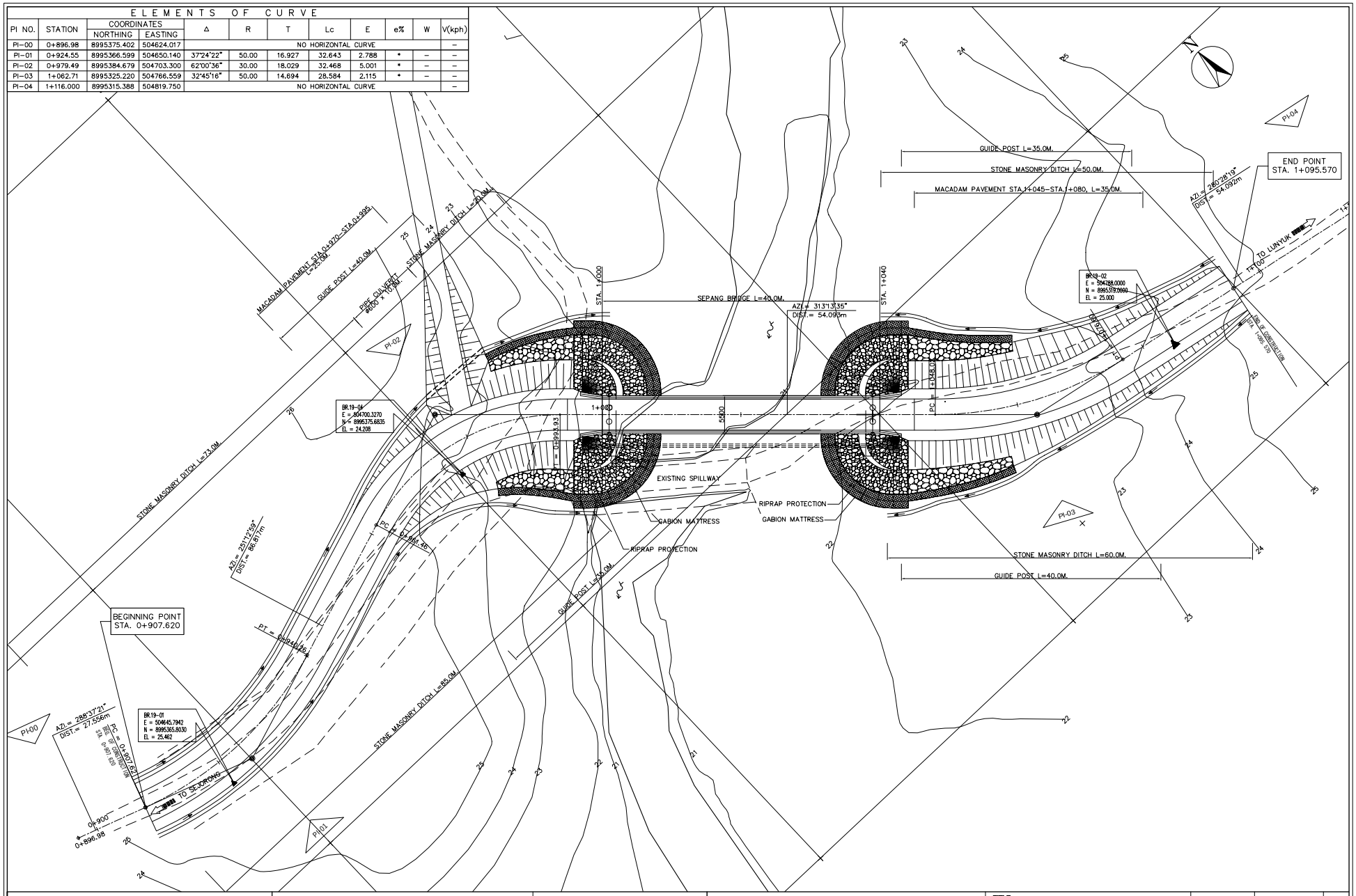

DIRECTORATE GENERAL OF HIGHWAY MINISTRY OF PUBLIC WORKS THE REPUBLIC OF INDONESIA	JICA JAPAN INTERNATIONAL COOPERATION AGENCY	KATAHIRA & ENGINEERS INTERNATIONAL	THE PREPARATORY SURVEY ON THE PROJECT FOR CONSTRUCTION OF BRIDGES IN THE PROVINCE OF NUSA TENGGARA BARAT, PHASE-3 IN THE REPUBLIC OF INDONESIA	TITLE : BR-19 SEPANG BRIDGE GENERAL SITE PLAN	SCALE : 1:500	DRAWING No: 3-1 Rev.

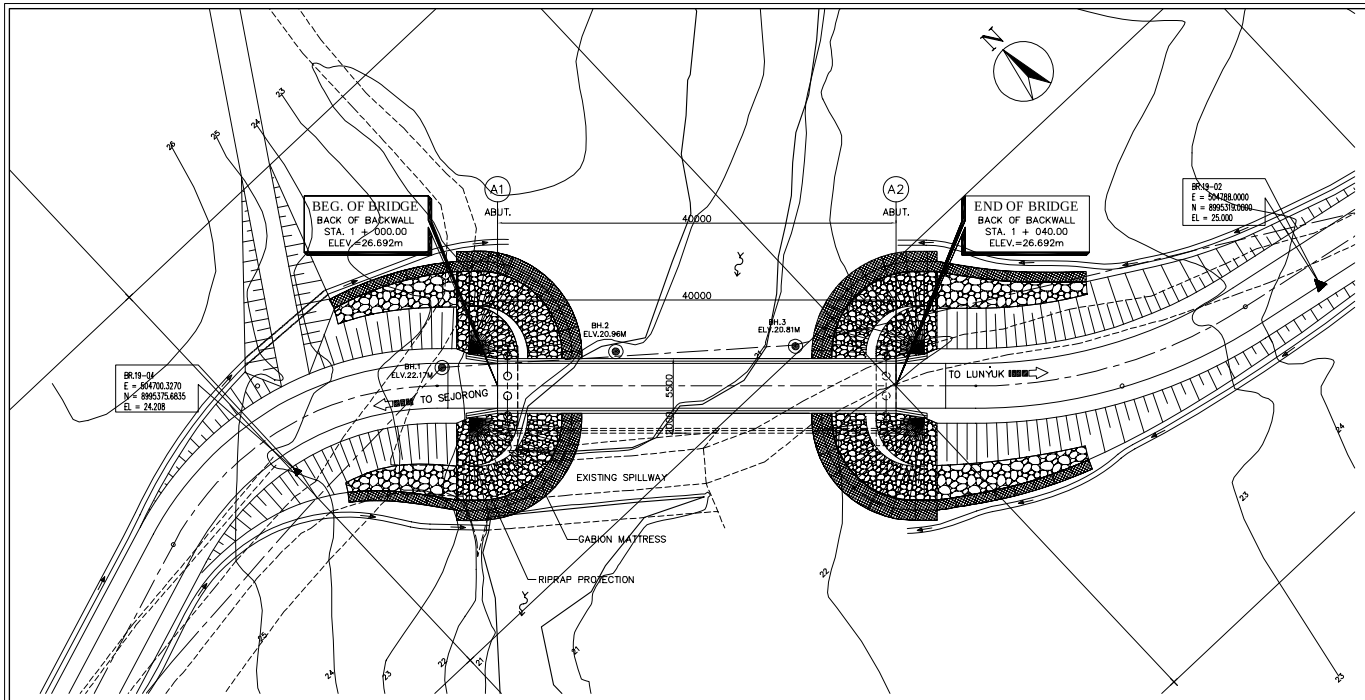

1 GENERAL PLAN
SCALE 1:500

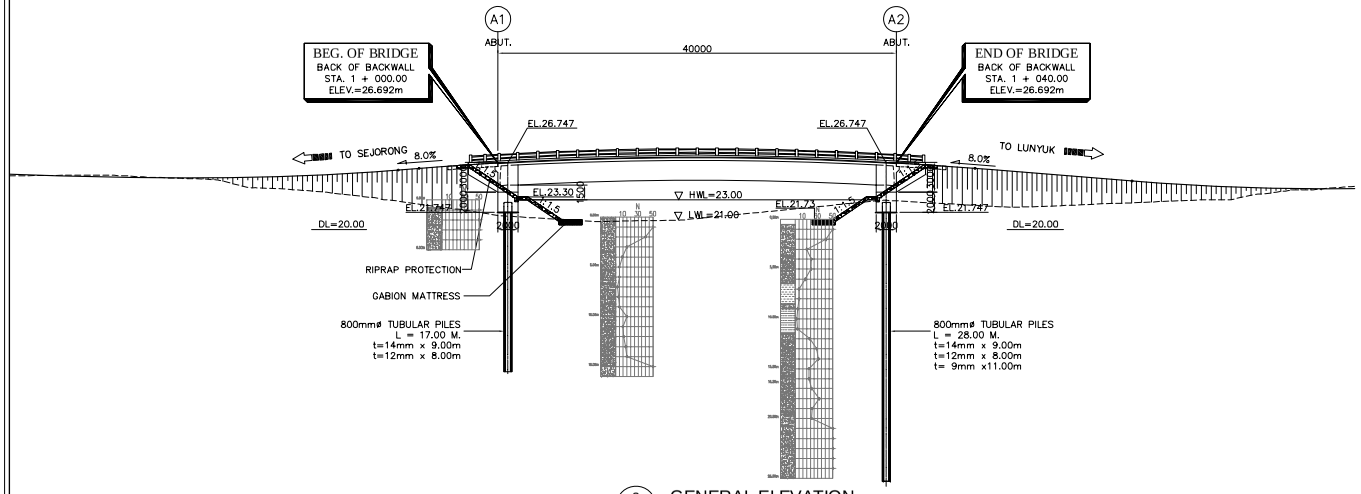

2 GENERAL ELEVATION
SCALE 1:500

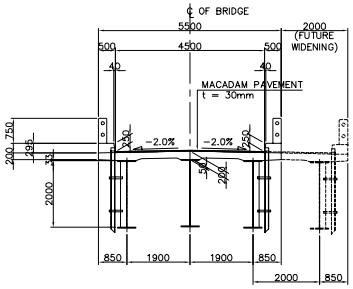

3 SECTION @ MIDSPAN
SCALE 1:150

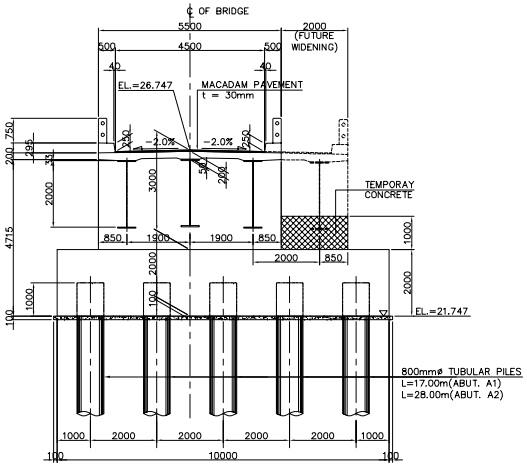

4 SECTION @ ABUTMENT
SCALE 1:150

DIRECTORATE GENERAL OF HIGHWAY MINISTRY OF PUBLIC WORKS THE REPUBLIC OF INDONESIA	JICA JAPAN INTERNATIONAL COOPERATION AGENCY	KATAHIRA & ENGINEERS INTERNATIONAL	THE PREPARATORY SURVEY ON THE PROJECT FOR CONSTRUCTION OF BRIDGES IN THE PROVINCE OF NUSA TENGGARA BARAT, PHASE-3 IN THE REPUBLIC OF INDONESIA	TITLE : BR-19 SEPANG BRIDGE GEN. PLAN, ELEVATION & SECTIONS	SCALE : AS SHOWN	DRAWING No: 3-2 Rev.

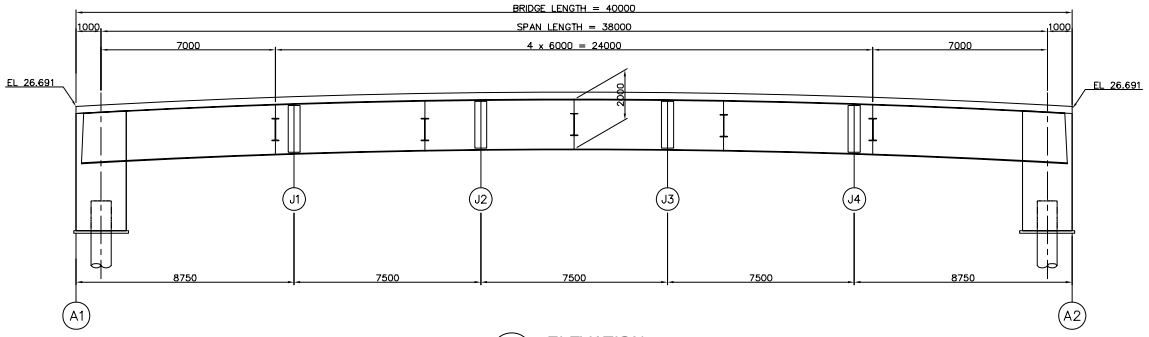

1 ELEVATION
SCALE 1:100

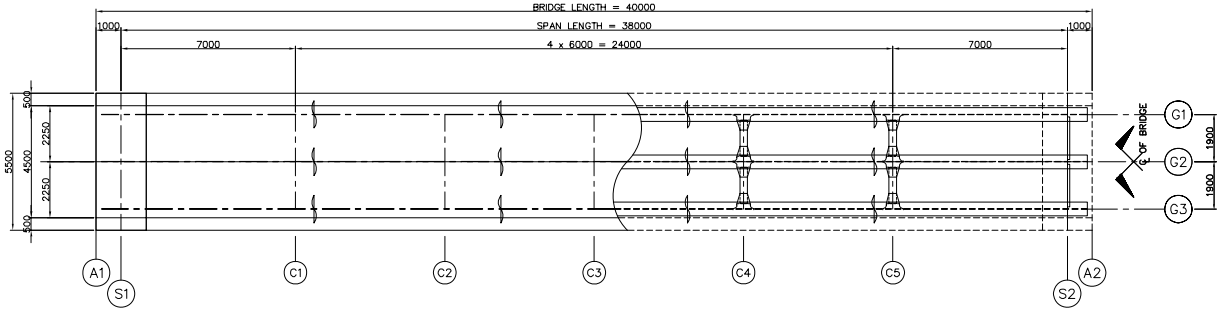

2 PLAN
SCALE 1:100

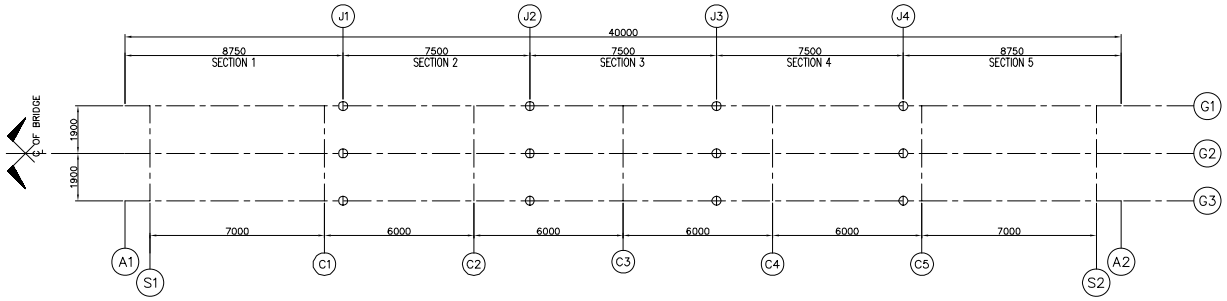

3 KEY PLAN
SCALE 1:100

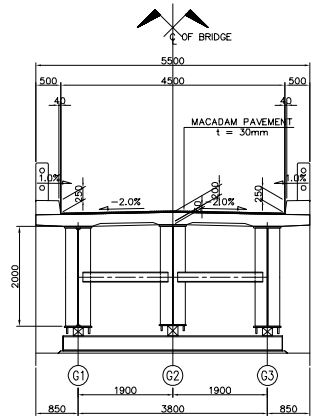

4 SECTION @ S1 & S2
SCALE 1:50

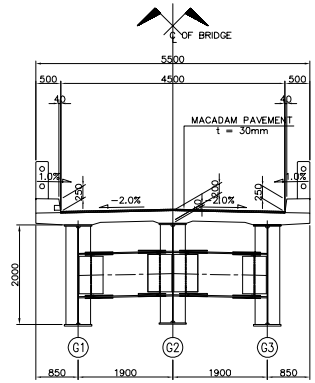

5 SECTION @ C1~C5
SCALE 1:50

DIRECTORATE GENERAL OF HIGHWAY MINISTRY OF PUBLIC WORKS THE REPUBLIC OF INDONESIA	JICA JAPAN INTERNATIONAL COOPERATION AGENCY	KATAHIRA & ENGINEERS INTERNATIONAL	THE PREPARATORY SURVEY ON THE PROJECT FOR CONSTRUCTION OF BRIDGES IN THE PROVINCE OF NUSA TENGGARA BARAT, PHASE-3 IN THE REPUBLIC OF INDONESIA	TITLE : BR-19 SEPANG BRIDGE GEN. DIM. OF SUPERSTRUCTURE	SCALE : AS SHOWN	DRAWING No: 3-3 Rev.

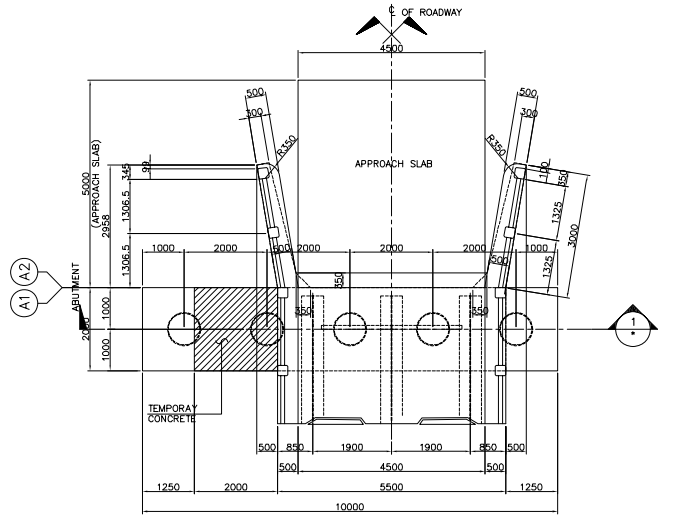

2 PLAN
SCALE 1:60

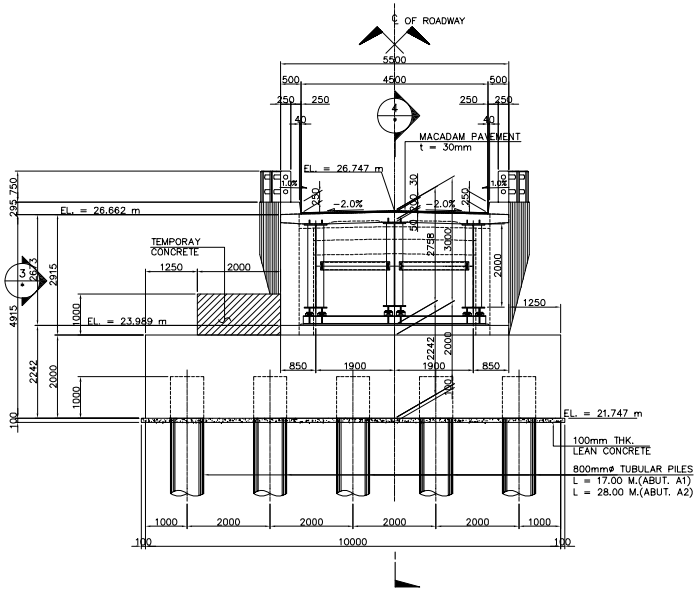

1 ELEVATION
SCALE 1:60

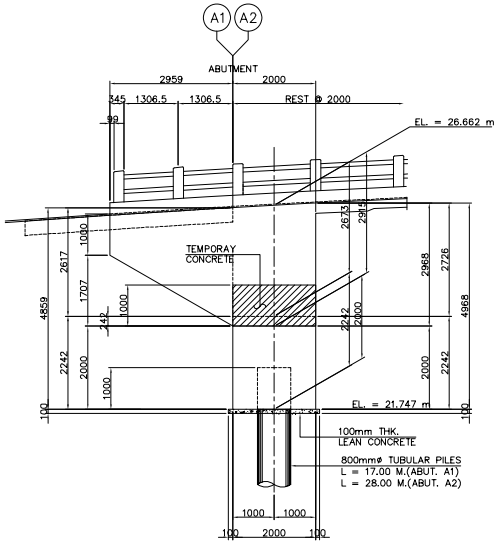

3 ELEVATION
SCALE 1:60

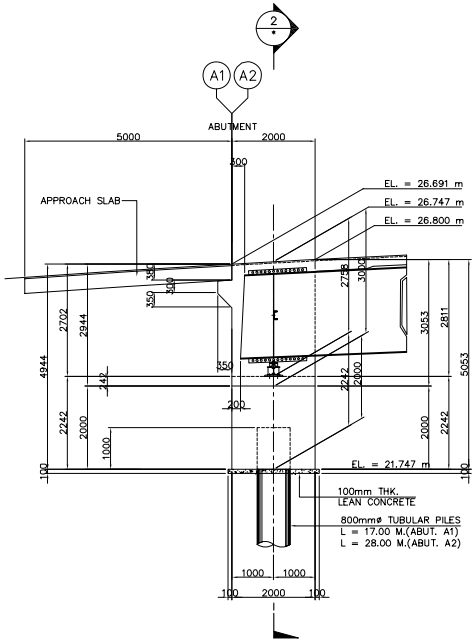

4 ELEVATION
SCALE 1:60

DIRECTORATE GENERAL OF HIGHWAY MINISTRY OF PUBLIC WORKS THE REPUBLIC OF INDONESIA	JICA JAPAN INTERNATIONAL COOPERATION AGENCY	KATAHIRA & ENGINEERS INTERNATIONAL	THE PREPARATORY SURVEY ON THE PROJECT FOR CONSTRUCTION OF BRIDGES IN THE PROVINCE OF NUSA TENGGARA BARAT, PHASE-3 IN THE REPUBLIC OF INDONESIA	TITLE : BR-19 SEPANG BRIDGE SUBSTRUCTURE STRUCTURAL DIMENSION (ABUT. A1 AND A2)	SCALE : AS SHOWN	DRAWING No: 3-4

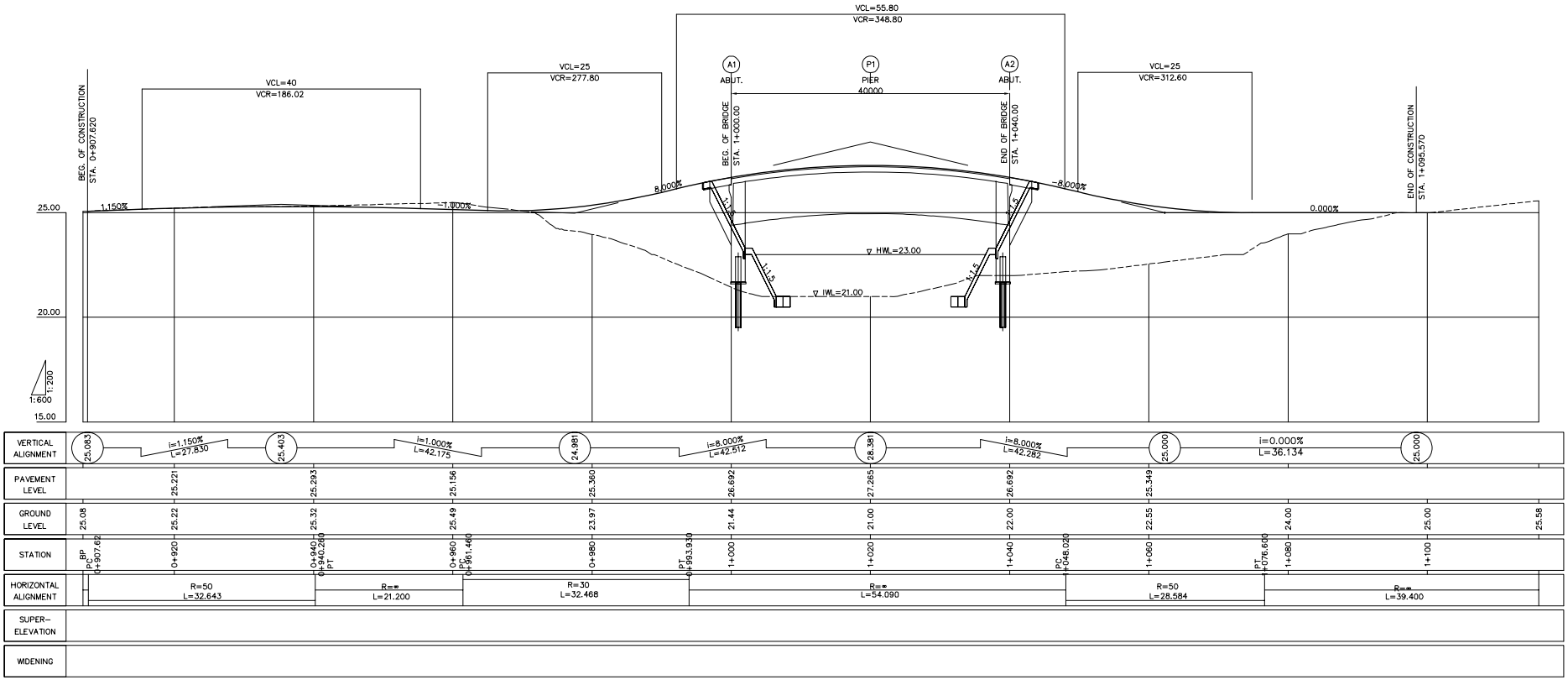

DIRECTORATE GENERAL OF HIGHWAY MINISTRY OF PUBLIC WORKS THE REPUBLIC OF INDONESIA	JICA JAPAN INTERNATIONAL COOPERATION AGENCY	KATAHIRA & ENGINEERS INTERNATIONAL	THE PREPARATORY SURVEY ON THE PROJECT FOR CONSTRUCTION OF BRIDGES IN THE PROVINCE OF NUSA TENGGARA BARAT, PHASE-3 IN THE REPUBLIC OF INDONESIA	TITLE : BR-19 SEPANG BRIDGE APPROACH ROAD PROFILE	SCALE : H = 1:600 V = 1:200	DRAWING No: 3-5 Rev.

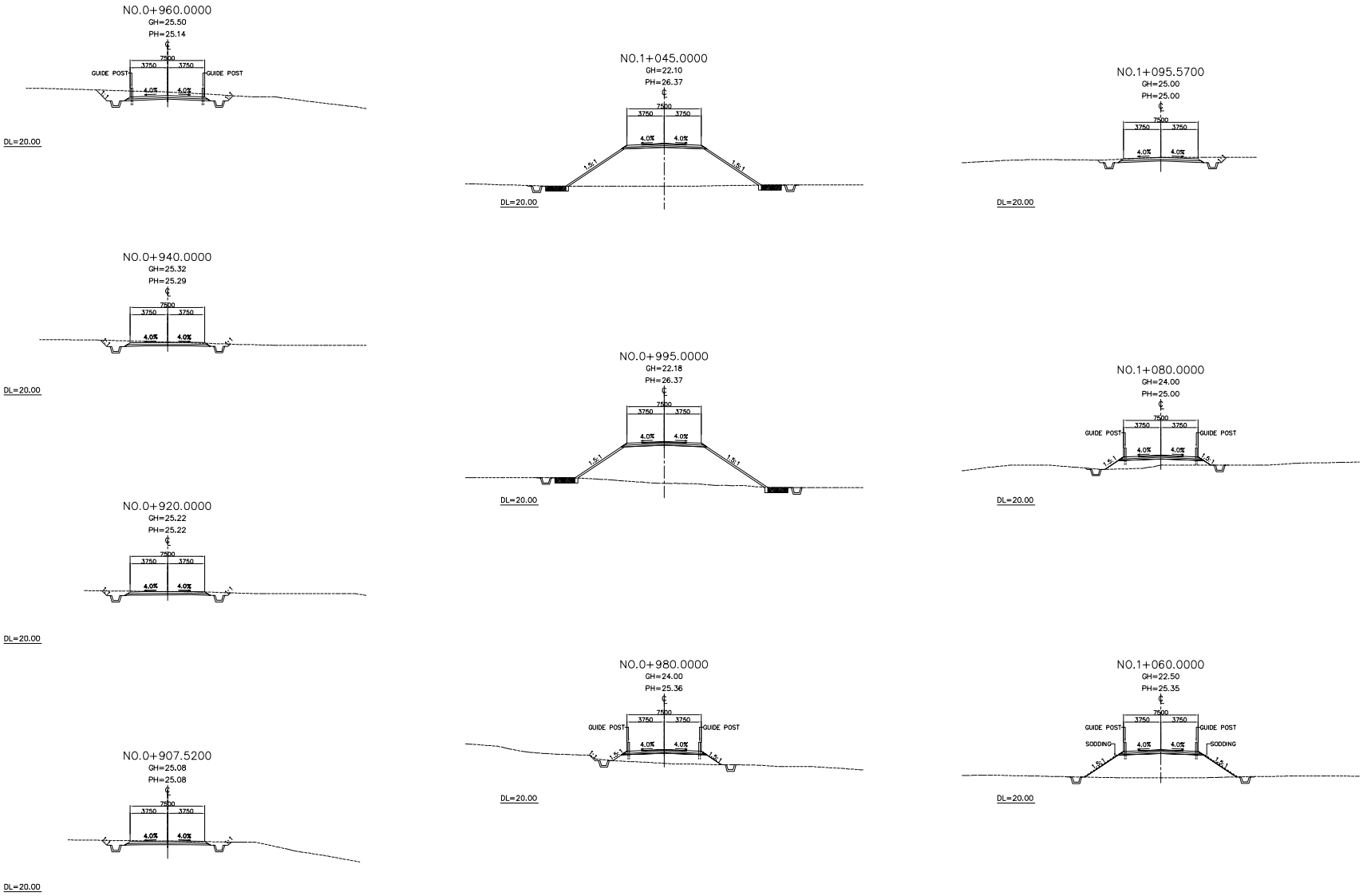

DIRECTORATE GENERAL OF HIGHWAY MINISTRY OF PUBLIC WORKS THE REPUBLIC OF INDONESIA	JICA JAPAN INTERNATIONAL COOPERATION AGENCY	KATAHIRA & ENGINEERS INTERNATIONAL	THE PREPARATORY SURVEY ON THE PROJECT FOR CONSTRUCTION OF BRIDGES IN THE PROVINCE OF NUSA TENGGARA BARAT, PHASE-3 IN THE REPUBLIC OF INDONESIA	TITLE : BR-19 SEPANG BRIDGE APPROACH ROAD CROSS SECTIONS	SCALE : 1:400	DRAWING No: 3-6 Rev.

4. BR-20 BONTONG BRIDGE

ELEMENTS OF CURVE											
PI NO.	STATION	COORDINATES		Δ	R	T	Lc	E	e%	W	V(kph)
		NORTHING	EASTING								
PI-00	0+892.636	8996945.007	507948.885	NO HORIZONTAL CURVE							–
PI-01	0+981.123	8997024.422	507987.912	107°42'26"	36.00	49.284	67.674	25.032	*	–	–
PI-02	1+036.746	8996964.454	508050.275	88°38'19"	20.00	19.530	30.941	1.954	*	–	–
PI-03	1+103.544	8997017.207	508103.471	NO HORIZONTAL CURVE							–

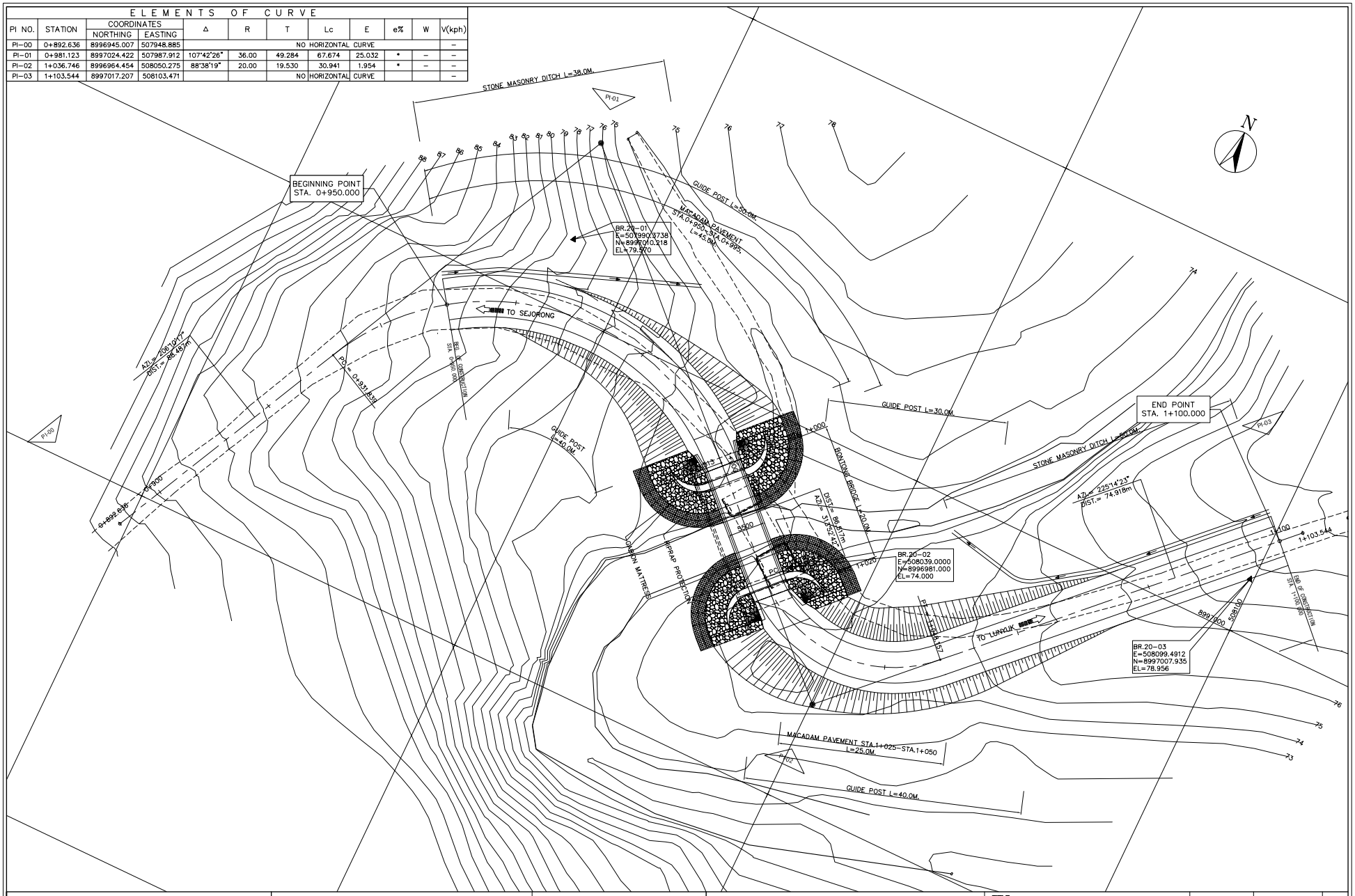

DIRECTORATE GENERAL OF HIGHWAY MINISTRY OF PUBLIC WORKS THE REPUBLIC OF INDONESIA	JICA JAPAN INTERNATIONAL COOPERATION AGENCY	KATAHIRA & ENGINEERS INTERNATIONAL	THE PREPARATORY SURVEY ON THE PROJECT FOR CONSTRUCTION OF BRIDGES IN THE PROVINCE OF NUSA TENGGARA BARAT, PHASE-3 IN THE REPUBLIC OF INDONESIA	TITLE : BR-20 BONTONG BRIDGE GENERAL SITE PLAN	SCALE : 1:500	DRAWING No: 4-1 Rev.

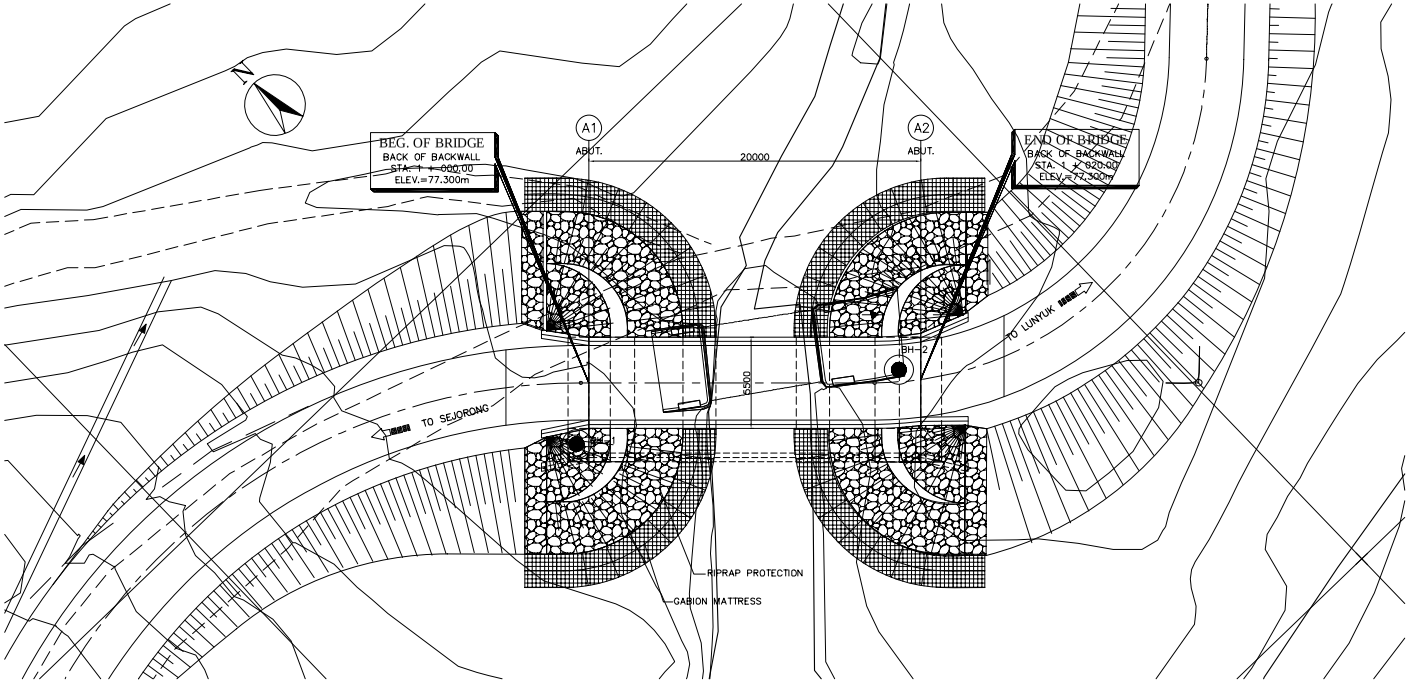

1 GENERAL PLAN
SCALE 1:300

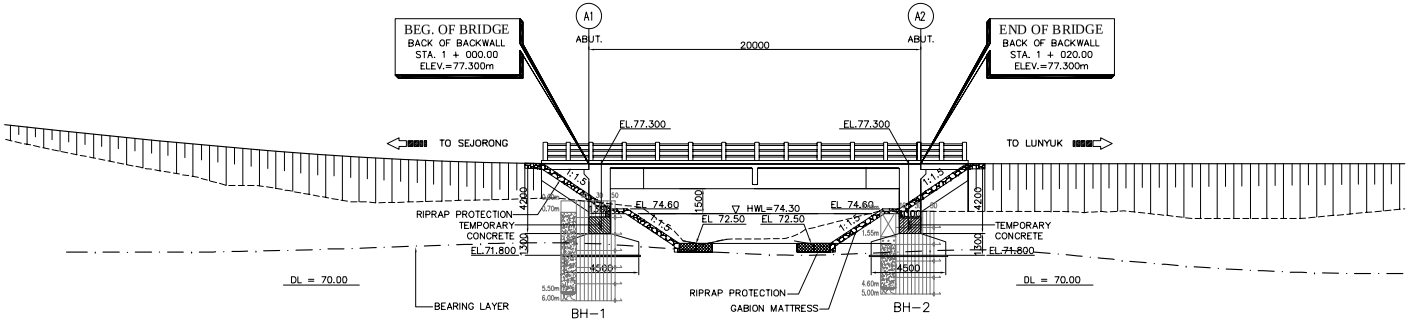

2 GENERAL ELEVATION
SCALE 1:300

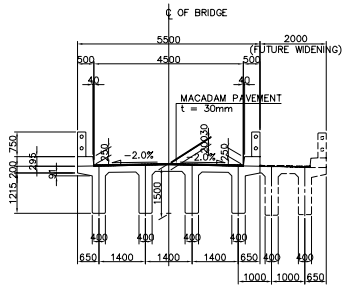

3 SECTION @ MIDSPAN
SCALE 1:150

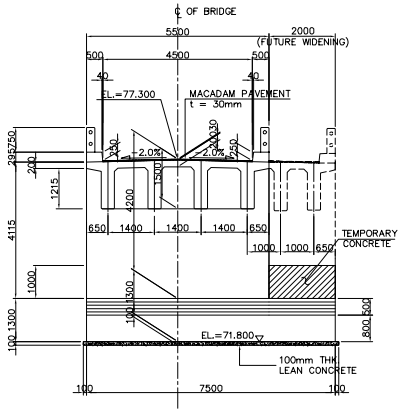

4 SECTION @ ABUTMENT
SCALE 1:150

DIRECTORATE GENERAL OF HIGHWAY MINISTRY OF PUBLIC WORKS THE REPUBLIC OF INDONESIA	JICA JAPAN INTERNATIONAL COOPERATION AGENCY	KATAHIRA & ENGINEERS INTERNATIONAL	THE PREPARATORY SURVEY ON THE PROJECT FOR CONSTRUCTION OF BRIDGES IN THE PROVINCE OF NUSA TENGGARA BARAT, PHASE-3 IN THE REPUBLIC OF INDONESIA	TITLE : BR-20 BONTONG BRIDGE GEN. PLAN, ELEVATION & SECTIONS	SCALE : AS SHOWN	DRAWING No: 4-2 Rev.

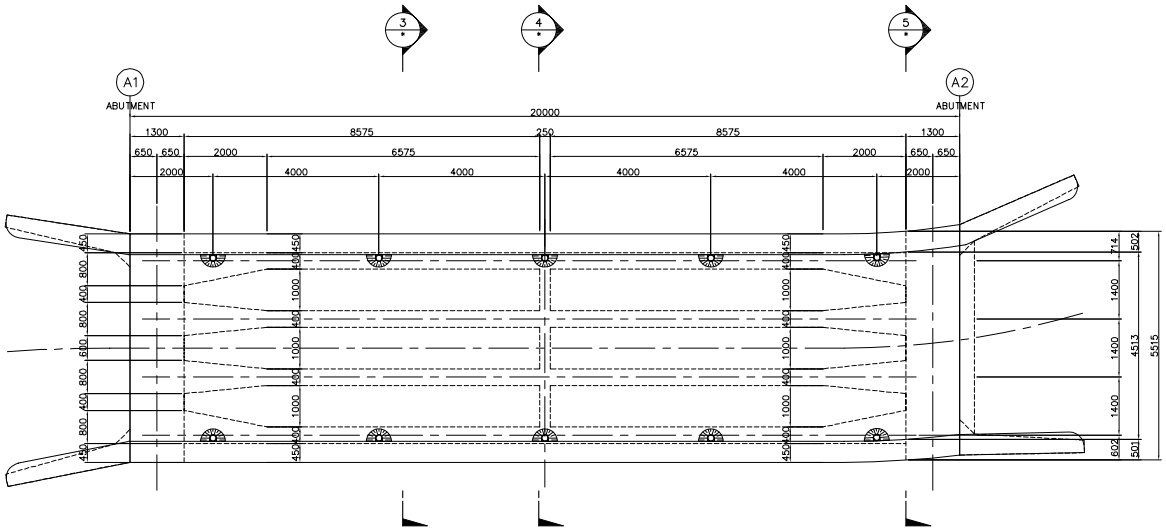

1 PLAN
SCALE 1:60

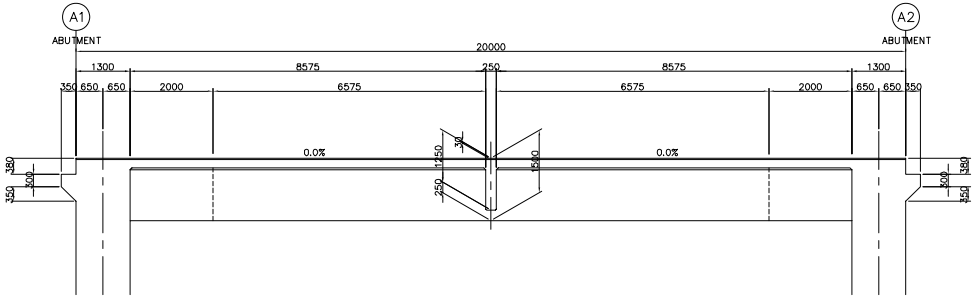

2 ELEVATION
SCALE 1:60

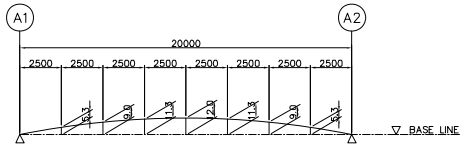

6 CAMBER DIAGRAM
NOT TO SCALE

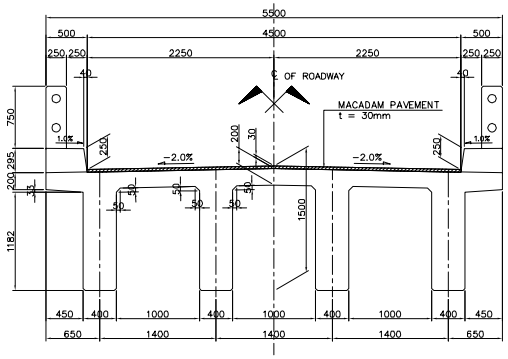

3 SECTION
SCALE 1:30

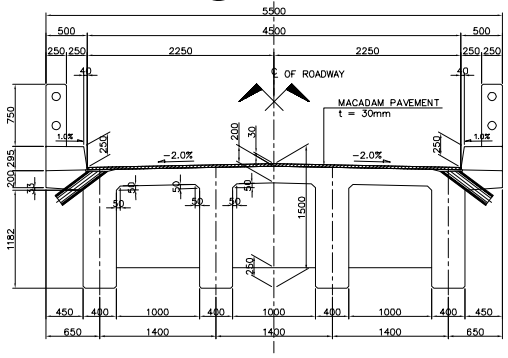

4 SECTION
SCALE 1:30

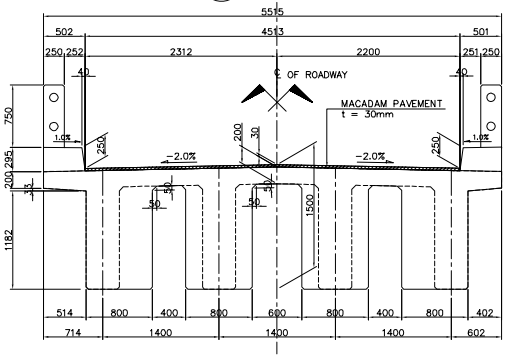

5 SECTION
SCALE 1:30

DIRECTORATE GENERAL OF HIGHWAY MINISTRY OF PUBLIC WORKS THE REPUBLIC OF INDONESIA	JICA JAPAN INTERNATIONAL COOPERATION AGENCY	KATAHIRA & ENGINEERS INTERNATIONAL	THE PREPARATORY SURVEY ON THE PROJECT FOR CONSTRUCTION OF BRIDGES IN THE PROVINCE OF NUSA TENGGARA BARAT, PHASE-3 IN THE REPUBLIC OF INDONESIA	TITLE : BR-20 BONTONG BRIDGE SUPERSTRUCTURE STRUCTURAL DIMENSION	SCALE : AS SHOWN	DRAWING No: 4-3 Rev.

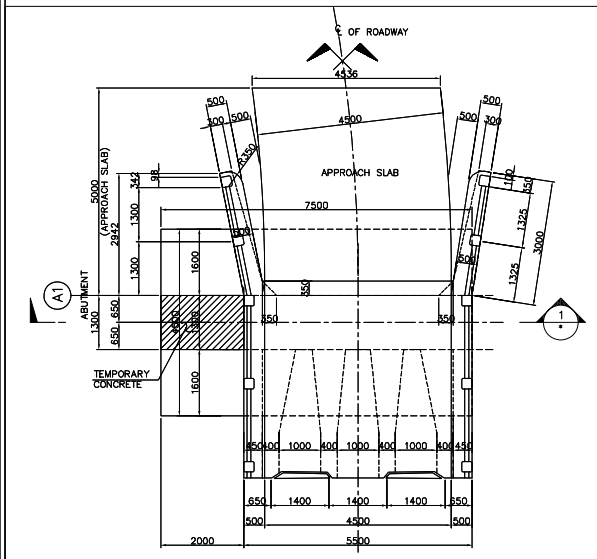

2 PLAN
SCALE 1:60

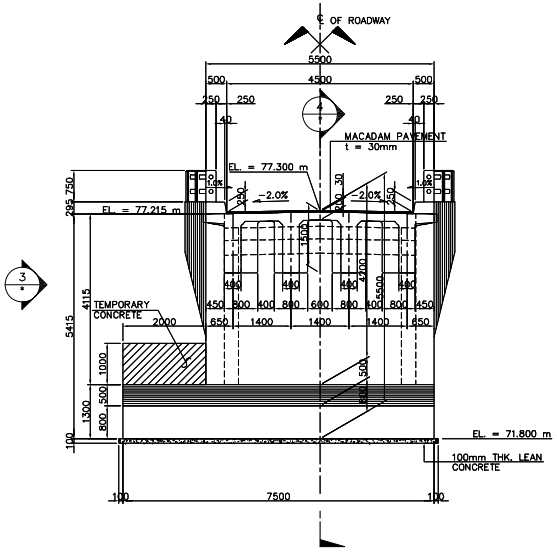

1 ELEVATION
SCALE 1:60

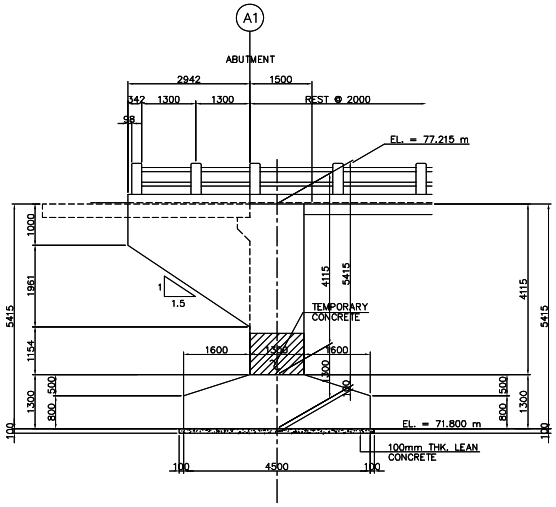

3 ELEVATION
SCALE 1:60

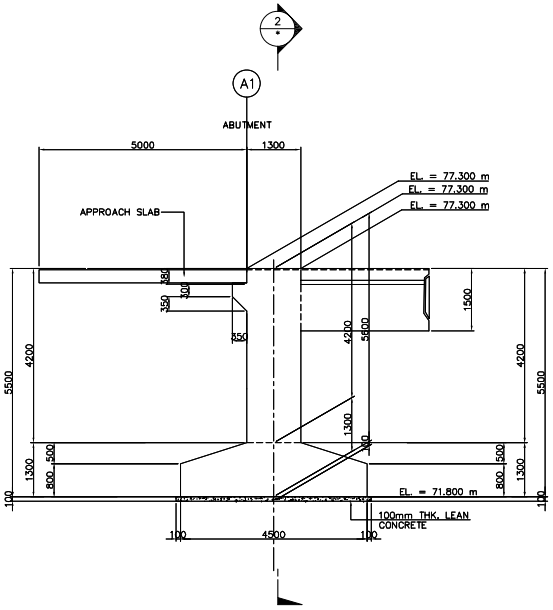

4 ELEVATION
SCALE 1:60

DIRECTORATE GENERAL OF HIGHWAY MINISTRY OF PUBLIC WORKS THE REPUBLIC OF INDONESIA	JICA JAPAN INTERNATIONAL COOPERATION AGENCY	KATAHIRA & ENGINEERS INTERNATIONAL	THE PREPARATORY SURVEY ON THE PROJECT FOR CONSTRUCTION OF BRIDGES IN THE PROVINCE OF NUSA TENGGARA BARAT, PHASE-3 IN THE REPUBLIC OF INDONESIA	TITLE : BR - 20 BONTONG BRIDGE SUBSTRUCTURE STRUCTURAL DIMENSION (ABUT. A1)	SCALE : AS SHOWN	DRAWING No: 4-4

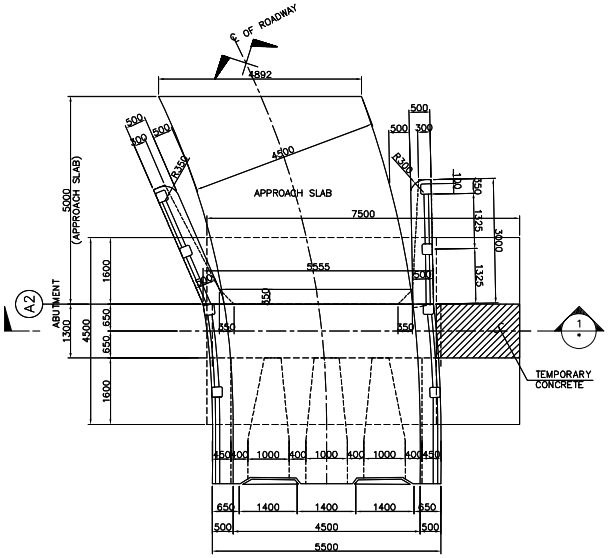

2 PLAN
SCALE 1:60

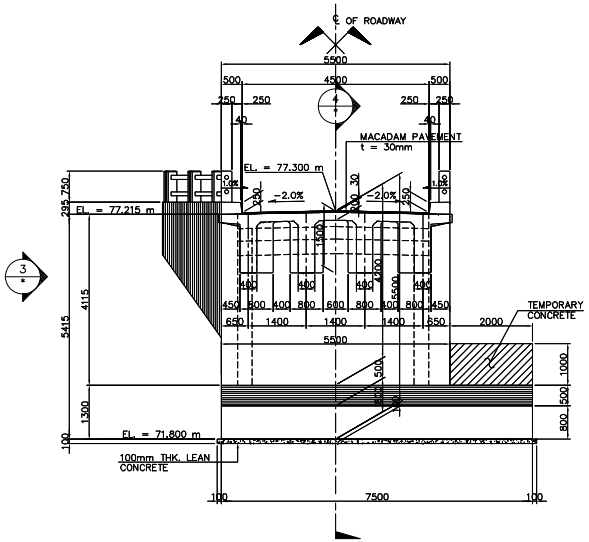

1 ELEVATION
SCALE 1:60

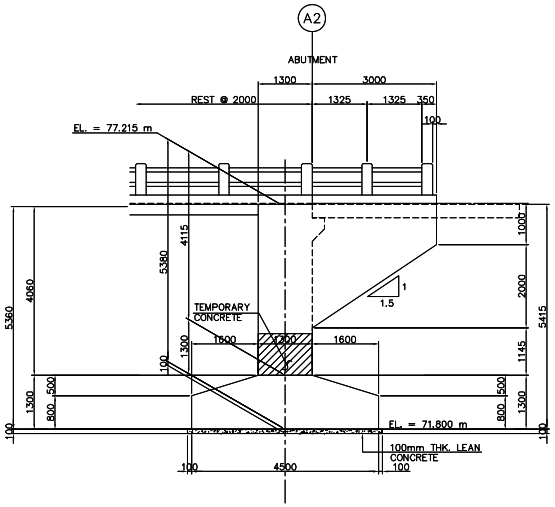

3 ELEVATION
SCALE 1:60

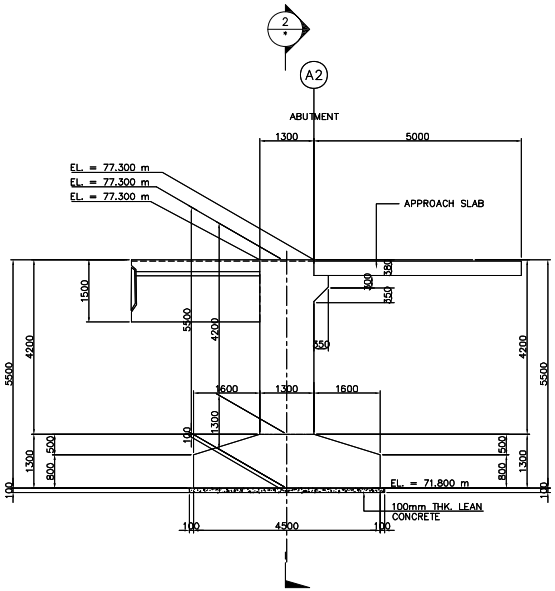

4 ELEVATION
SCALE 1:60

DIRECTORATE GENERAL OF HIGHWAY MINISTRY OF PUBLIC WORKS THE REPUBLIC OF INDONESIA	JICA JAPAN INTERNATIONAL COOPERATION AGENCY	KATAHIRA & ENGINEERS INTERNATIONAL	THE PREPARATORY SURVEY ON THE PROJECT FOR CONSTRUCTION OF BRIDGES IN THE PROVINCE OF NUSA TENGGARA BARAT, PHASE-3 IN THE REPUBLIC OF INDONESIA	TITLE : BR - 20 BONTONG BRIDGE SUBSTRUCTURE STRUCTURAL DIMENSION (ABUT. A2)	SCALE : AS SHOWN	DRAWING No: 4-5

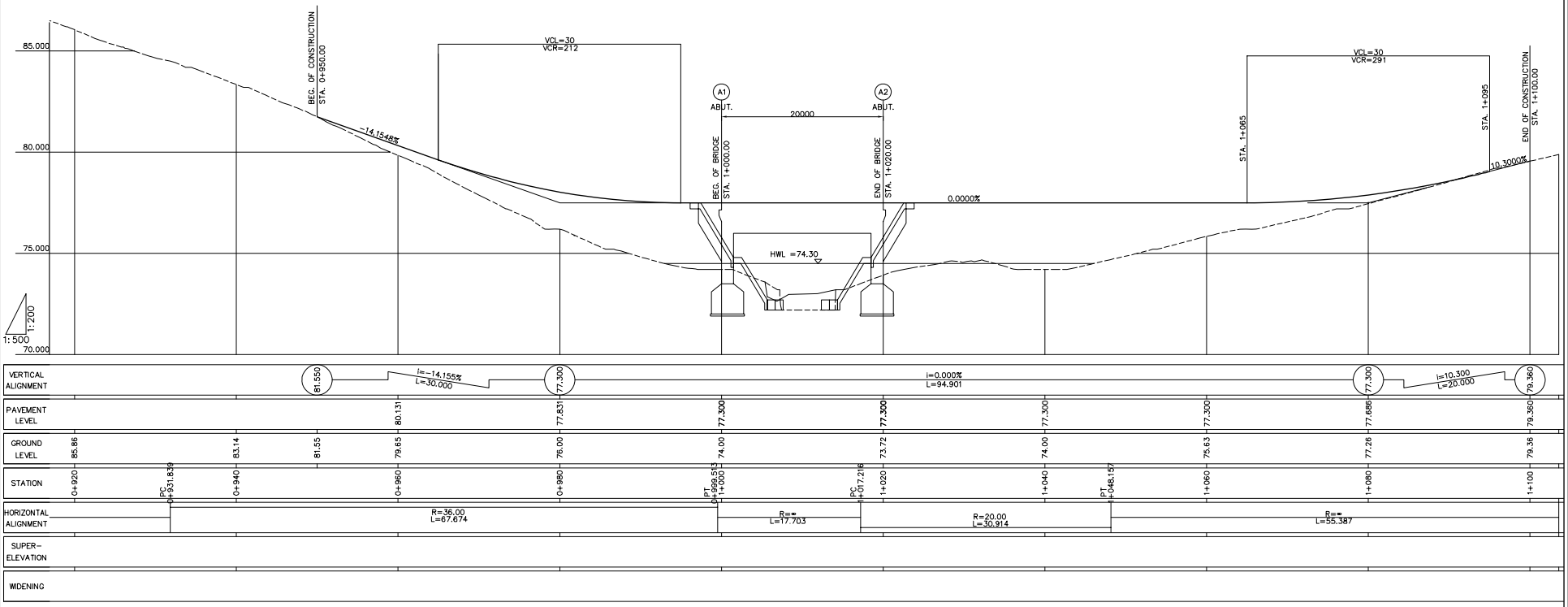

DIRECTORATE GENERAL OF HIGHWAY MINISTRY OF PUBLIC WORKS THE REPUBLIC OF INDONESIA	JICA JAPAN INTERNATIONAL COOPERATION AGENCY	KATAHIRA & ENGINEERS INTERNATIONAL	THE PREPARATORY SURVEY ON THE PROJECT FOR CONSTRUCTION OF BRIDGES IN THE PROVINCE OF NUSA TENGGARA BARAT, PHASE-3 IN THE REPUBLIC OF INDONESIA	TITLE : BR-20 BONTONG BRIDGE APPROACH ROAD PROFILE	SCALE : H = 1:500 V = 1:200	DRAWING No: 4-6 Rev.

NO.0+980.000
GH=76.00
PH=77.831

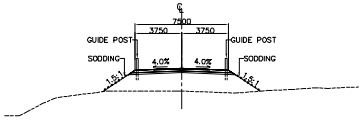

DL=70.00

NO.1+040.000
GH=74.00
PH=77.300

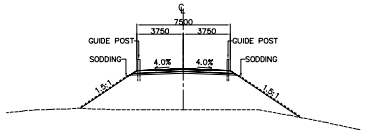

DL=70.00

NO.1+100.000
GH=79.36
PH=79.360

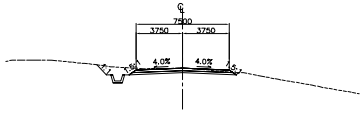

DL=70.00

NO.0+960.000
GH=79.65
PH=80.131

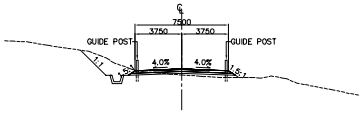

DL=70.00

NO.1+025.000
GH=74.18
PH=77.300

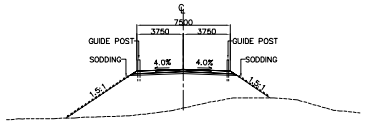

DL=70.00

NO.1+080.000
GH=77.26
PH=77.686

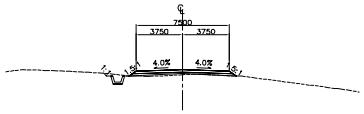

DL=70.00

NO.0+950.000
GH=81.55
PH=81.546

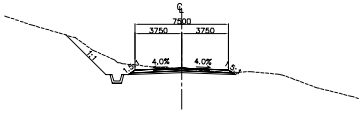

DL=70.00

NO.0+995.000
GH=74.12
PH=77.300

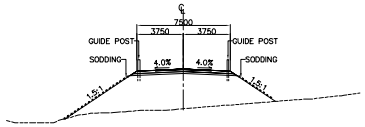

DL=70.00

NO.1+060.000
GH=75.63
PH=77.300

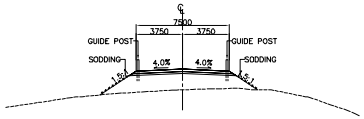

DL=70.00

DIRECTORATE GENERAL OF HIGHWAY MINISTRY OF PUBLIC WORKS THE REPUBLIC OF INDONESIA	JICA JAPAN INTERNATIONAL COOPERATION AGENCY	KATAHIRA & ENGINEERS INTERNATIONAL	THE PREPARATORY SURVEY ON THE PROJECT FOR CONSTRUCTION OF BRIDGES IN THE PROVINCE OF NUSA TENGGARA BARAT, PHASE-3 IN THE REPUBLIC OF INDONESIA	TITLE : BR-20 BONTONG BRIDGE APPROACH ROAD CROSS SECTIONS	SCALE : 1:400	DRAWING No: 4-7

Rev.

5. BR-22 BLENGKON BRIDGE

ELEMENTS OF CURVE											
PI NO.	STATION	COORDINATES		Δ	R	T	Lc	E	e%	W	V(kph)
		NORTHING	EASTING								
PI-00	0+910.641	8997469.703	510434.369	NO HORIZONTAL CURVE							–
PI-01	0+985.544	8997477.042	510508.912	28°36'42"	40.00	10.200	19.975	1.280	*	–	–
PI-02	1+040.712	8997508.318	510554.873	27°20'12"	60.00	13.838	27.201	1.575	*	–	–
PI-03	1+119.865	8997519.757	510633.677	91°10'14"	38.00	38.784	60.467	16.298	*	–	–
PI-04	1+152.994	8997569.309	510625.447	NO HORIZONTAL CURVE							–

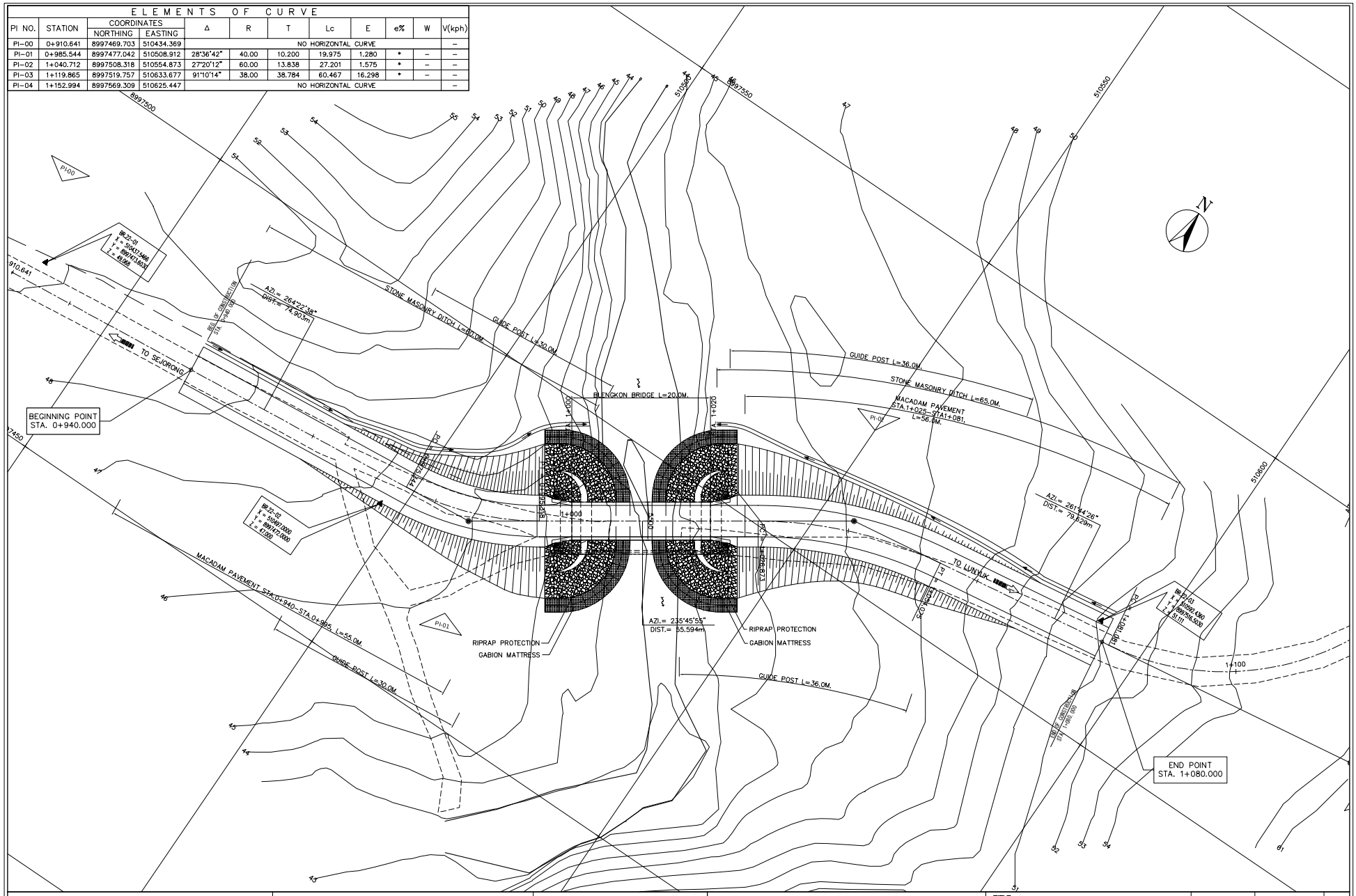

DIRECTORATE GENERAL OF HIGHWAY MINISTRY OF PUBLIC WORKS THE REPUBLIC OF INDONESIA	JICA JAPAN INTERNATIONAL COOPERATION AGENCY	KATAHIRA & ENGINEERS INTERNATIONAL	THE PREPARATORY SURVEY ON THE PROJECT FOR CONSTRUCTION OF BRIDGES IN THE PROVINCE OF NUSA TENGGARA BARAT, PHASE-3 IN THE REPUBLIC OF INDONESIA	TITLE: BR. -22 BLENGKON BRIDGE GENERAL SITE PLAN	SCALE: AS SHOWN	DRAWING No: 5-1 Rev.

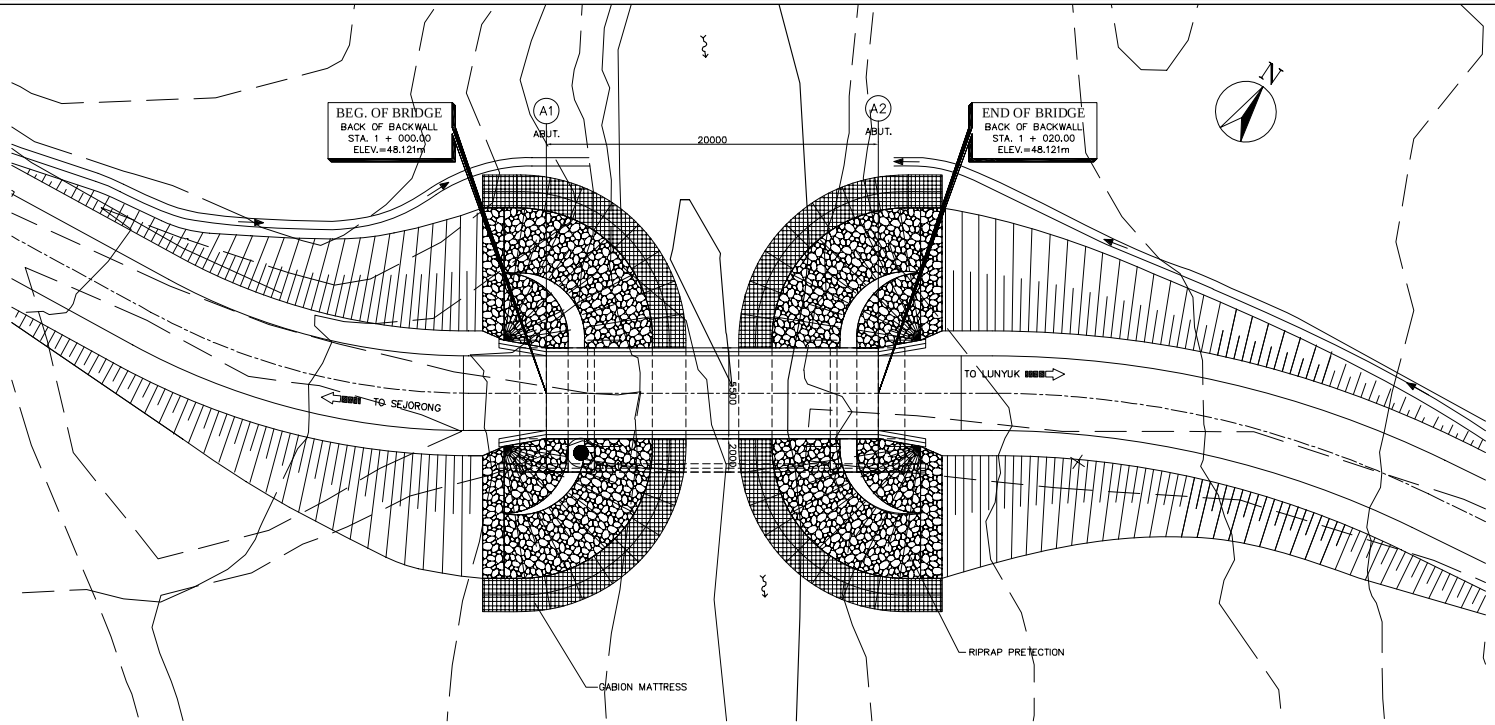

B - GENERAL PLAN
SCALE 1:300

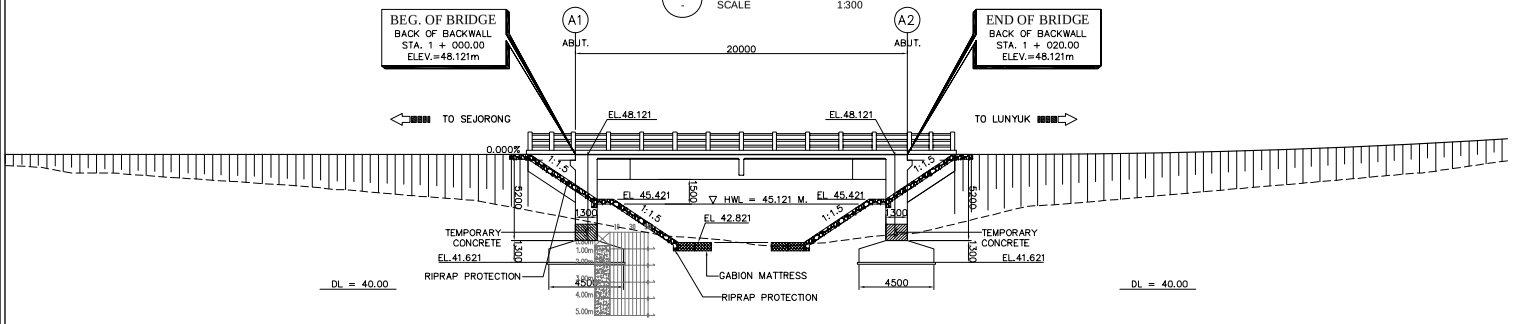

A - GENERAL ELEVATION
SCALE 1:300

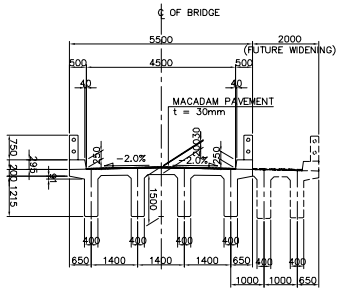

1 - SECTION @ MIDSPAN
SCALE 1:150

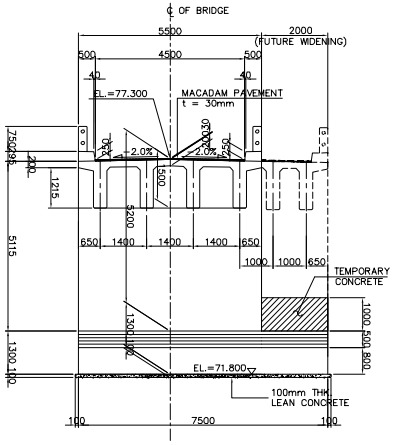

2 - SECTION @ ABUTMENT
SCALE 1:150

DIRECTORATE GENERAL OF HIGHWAY MINISTRY OF PUBLIC WORKS THE REPUBLIC OF INDONESIA	JICA JAPAN INTERNATIONAL COOPERATION AGENCY	KATAHIRA & ENGINEERS INTERNATIONAL	THE PREPARATORY SURVEY ON THE PROJECT FOR CONSTRUCTION OF BRIDGES IN THE PROVINCE OF NUSA TENGGARA BARAT, PHASE-3 IN THE REPUBLIC OF INDONESIA	TITLE : BR-22 BLENGKON BRIDGE GEN. PLAN, ELEVATION & SECTIONS	SCALE : AS SHOWN	DRAWING No: 5-2 Rev.

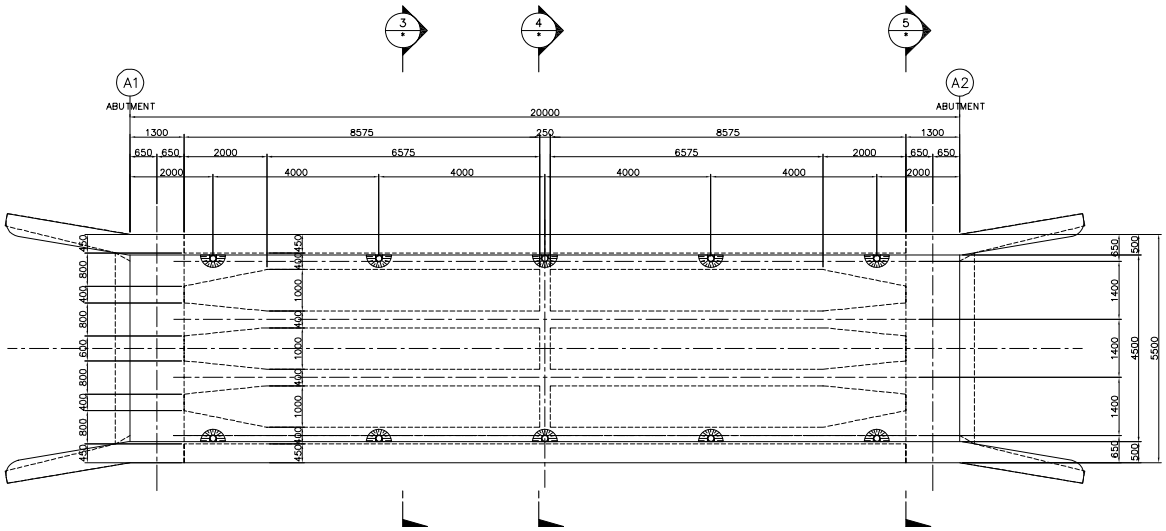

1 - PLAN
SCALE 1:60

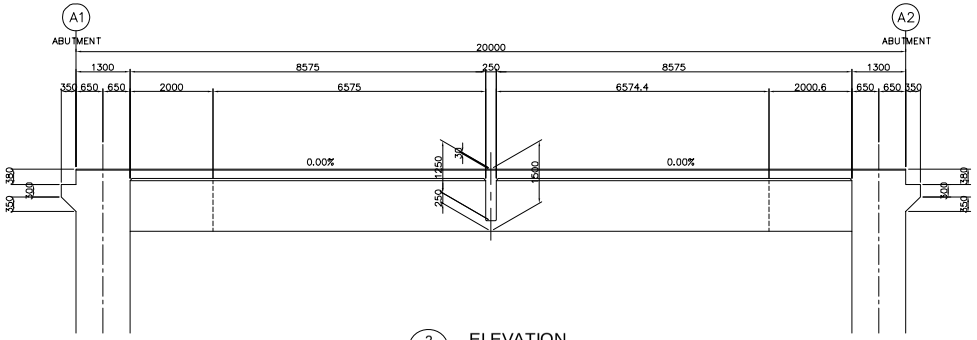

2 - ELEVATION
SCALE 1:60

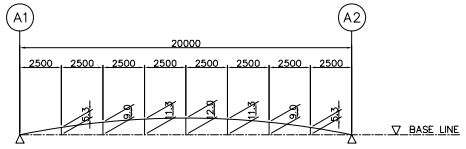

6 - CAMBER DIAGRAM
NOT TO SCALE

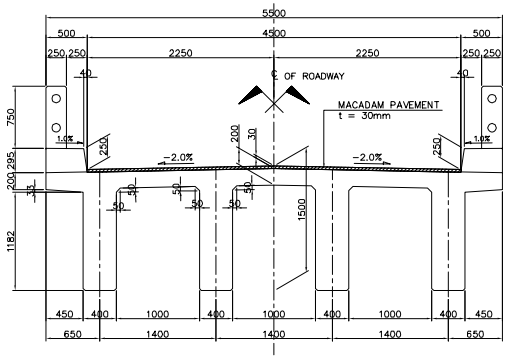

3 - SECTION
SCALE 1:30

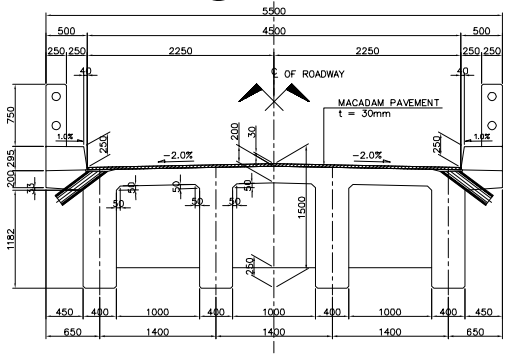

4 - SECTION
SCALE 1:30

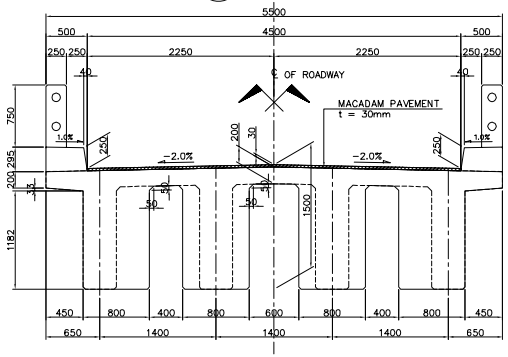

5 - SECTION
SCALE 1:30

DIRECTORATE GENERAL OF HIGHWAY MINISTRY OF PUBLIC WORKS THE REPUBLIC OF INDONESIA	JICA JAPAN INTERNATIONAL COOPERATION AGENCY	KEI KATAHIRA & ENGINEERS INTERNATIONAL	THE PREPARATORY SURVEY ON THE PROJECT FOR CONSTRUCTION OF BRIDGES IN THE PROVINCE OF NUSA TENGGARA BARAT, PHASE-3 IN THE REPUBLIC OF INDONESIA	TITLE : BR-22 BLENGKON BRIDGE SUPERSTRUCTURE STRUCTURAL DIMENSION	SCALE : AS SHOWN	DRAWING No: 5-3 Rev.

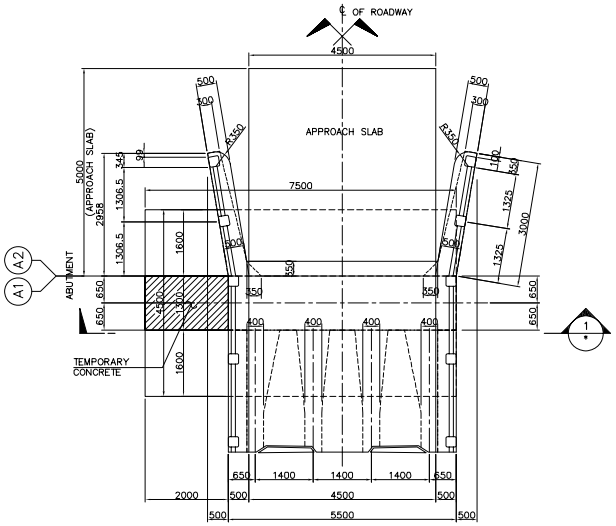

2 PLAN
SCALE 1:60

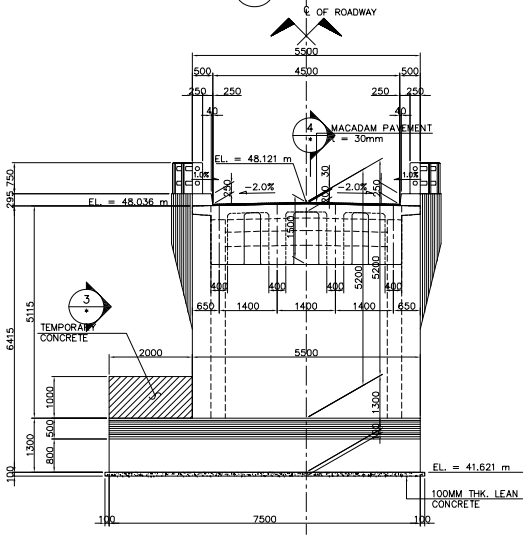

1 ELEVATION
SCALE 1:60

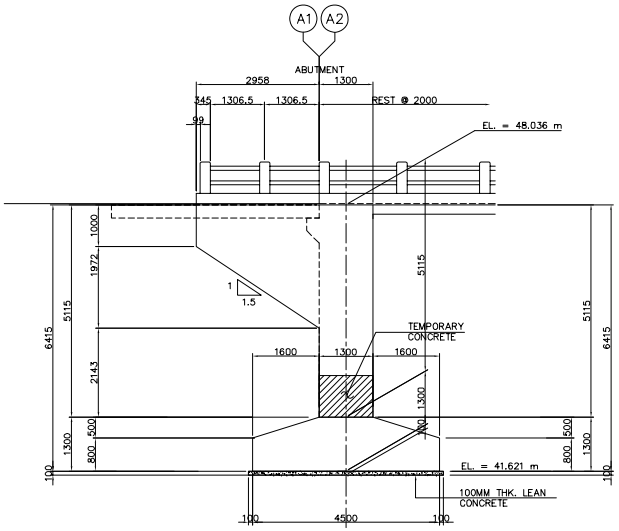

ELEVATION
1:60
3
SCALE

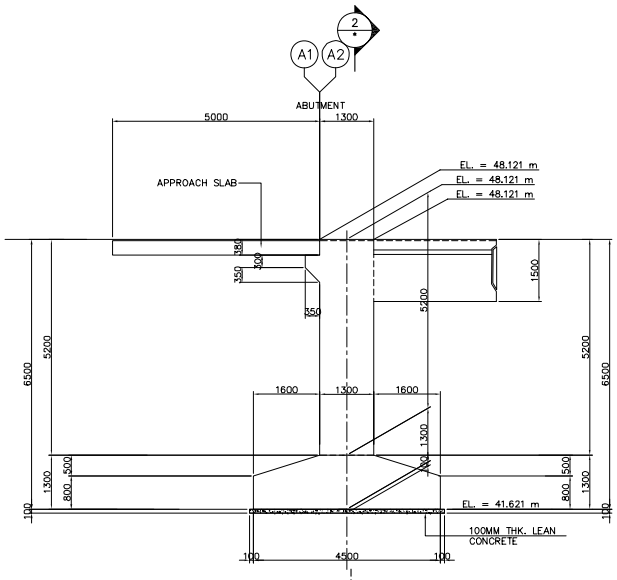

4 ELEVATION
SCALE 1:60

DIRECTORATE GENERAL OF HIGHWAY MINISTRY OF PUBLIC WORKS THE REPUBLIC OF INDONESIA	JICA JAPAN INTERNATIONAL COOPERATION AGENCY	KATAHIRA & ENGINEERS INTERNATIONAL	THE PREPARATORY SURVEY ON THE PROJECT FOR CONSTRUCTION OF BRIDGES IN THE PROVINCE OF NUSA TENGGARA BARAT, PHASE-3 IN THE REPUBLIC OF INDONESIA	TITLE : BR-22 BLENKON BRIDGE SUBSTRUCTURE STRUCTURAL DIMENSION (ABUT. A1 AND A2)	SCALE : AS SHOWN	DRAWING No: 5-4 Rev.

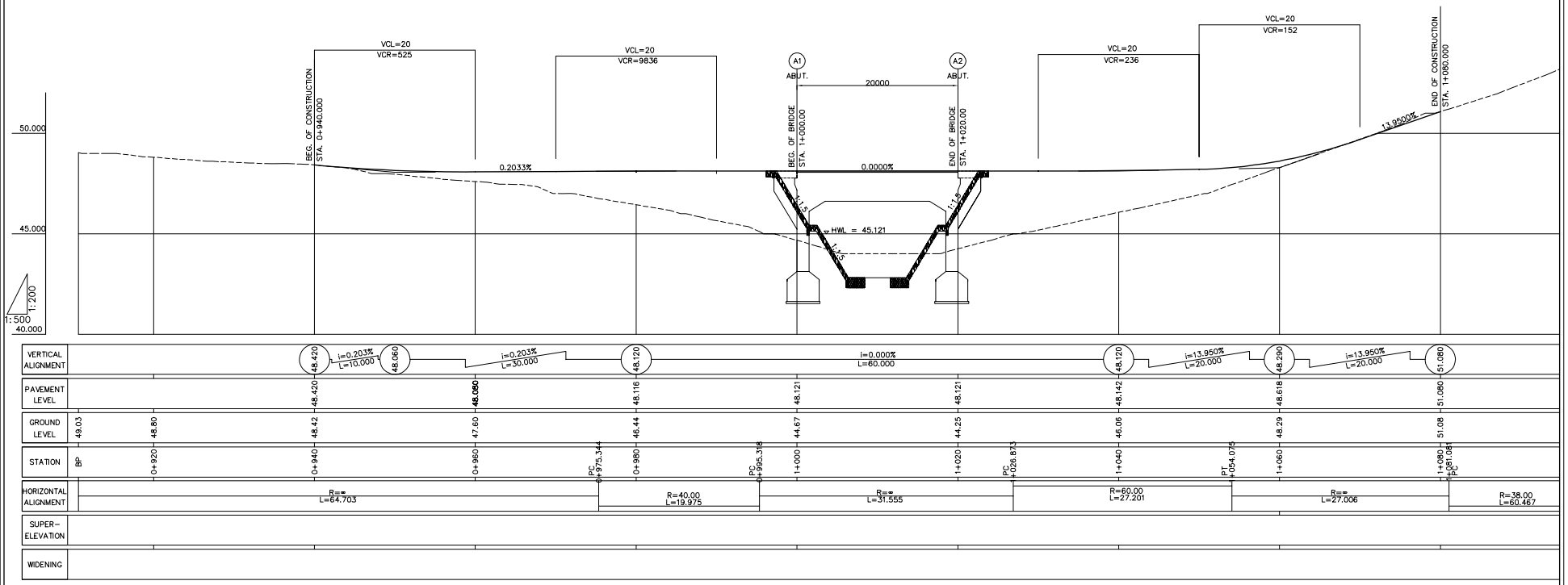

DIRECTORATE GENERAL OF HIGHWAY MINISTRY OF PUBLIC WORKS THE REPUBLIC OF INDONESIA	JICA JAPAN INTERNATIONAL COOPERATION AGENCY	KATAHIRA & ENGINEERS INTERNATIONAL	THE PREPARATORY SURVEY ON THE PROJECT FOR CONSTRUCTION OF BRIDGES IN THE PROVINCE OF NUSA TENGGARA BARAT, PHASE-3 IN THE REPUBLIC OF INDONESIA	TITLE : BR-22 BLENGKON BRIDGE APPROACH ROAD PROFILE	SCALE : H = 1:500 V = 1:200	DRAWING No: 5-5 Rev.

NO.0+995.000
GH=45.16
PH=48.12

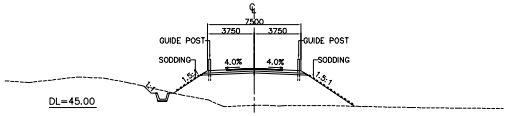

NO.0+980.000
GH=46.42
PH=48.12

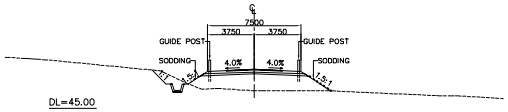

NO.0+960.000
GH=47.60
PH=48.08

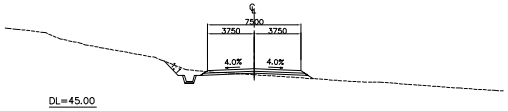

NO.0+940.000
GH=48.42
PH=48.42

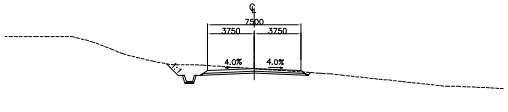

NO.1+080.000
GH=51.08
PH=51.08

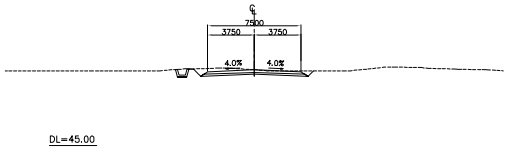

NO.1+060.000
GH=48.29
PH=48.62

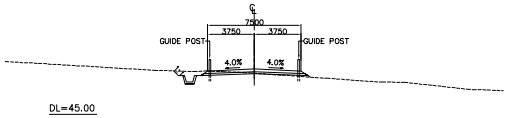

NO.1+040.000
GH=46.06
PH=48.14

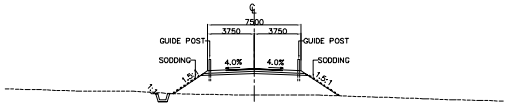

NO.1+025.000
GH=44.78
PH=48.12

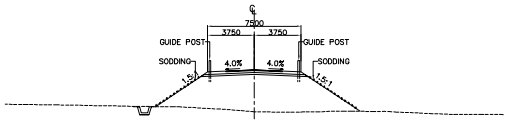

DIRECTORATE GENERAL OF HIGHWAY MINISTRY OF PUBLIC WORKS THE REPUBLIC OF INDONESIA	JICA JAPAN INTERNATIONAL COOPERATION AGENCY	KATAHIRA & ENGINEERS INTERNATIONAL	THE PREPARATORY SURVEY ON THE PROJECT FOR CONSTRUCTION OF BRIDGES IN THE PROVINCE OF NUSA TENGGARA BARAT, PHASE-3 IN THE REPUBLIC OF INDONESIA	TITLE : BR-22 BLENGKON BRIDGE APPROACH ROAD CROSS SECTIONS	SCALE : 1:400	DRAWING No: 5-6 Rev.