ANEXOS

ANEXO 1

PLANTAS

Lista dos Desenhos

Desenho No.	Título
C-001	Estação Hidroeléctrica do Cutato – Contornos da Bacia
C-002	Estação Hidroeléctrica do Cutato – Plano Geral
C-003	Estação Hidroeléctrica do Cutato – Plano da Barragem
C-004	Estação Hidroeléctrica do Cutato – Figura da Barragem à Montante
C-005	Estação Hidroeléctrica do Cutato – Corte Transversal Padrão da Barragem
C-006	Estação Hidroeléctrica do Cutato – Plano da Central Eléctrica
C-007	Estação Hidroeléctrica do Cutato – Corte Vertical da Central Eléctrica
C-008	Estação Hidroeléctrica do Cutato – Corte Transversal da Central Eléctrica
C-009	Estação Hidroeléctrica do Cutato – Plano de Escavação do Leito do Rio
C-010	Estação Hidroeléctrica do Cutato – Plano de Estradas de Acesso
C-011	Estação Hidroeléctrica do Cutato – Instalações Temporárias (1)
C-012	Estação Hidroeléctrica do Cutato – Instalações Temporárias (2)
E-001	Estação Hidroeléctrica do Cutato – Diagrama de Linhas
E-002	Estação Hidroeléctrica do Cutato – Planta da Central Eléctrica
E-003	Estação Hidroeléctrica do Cutato – Corte Vertical da Central Eléctrica
E-004	Estação Hidroeléctrica do Cutato – Corte Transversal da Central Eléctrica
E-005	Estação Hidroeléctrica do Cutato – Planta da Sub-estação
T-001	Rota da Linha de Distribuição de Cutato a Andulo
T-002	Diagrama das Linhas de Distribuição (30kV) de Cutato a Andulo
T-003	Diagrama das Linhas de Distribuição (400-230V) de Baixa Tensão para Chicumbi
T-004	Amostra de Desenho de Torre para Linha de Distribuição de Cutato a Andulo
T-005	Desenho da Torre para Linha de Distribuição de Cutato a Andulo
T-006	Amostra de Desenho para Torre de Linha de Distribuição de Cutato a Andulo
T-007	Desenho da Torre para Linha de Distribuição de Cutato a Andulo

FIGURE BASIN

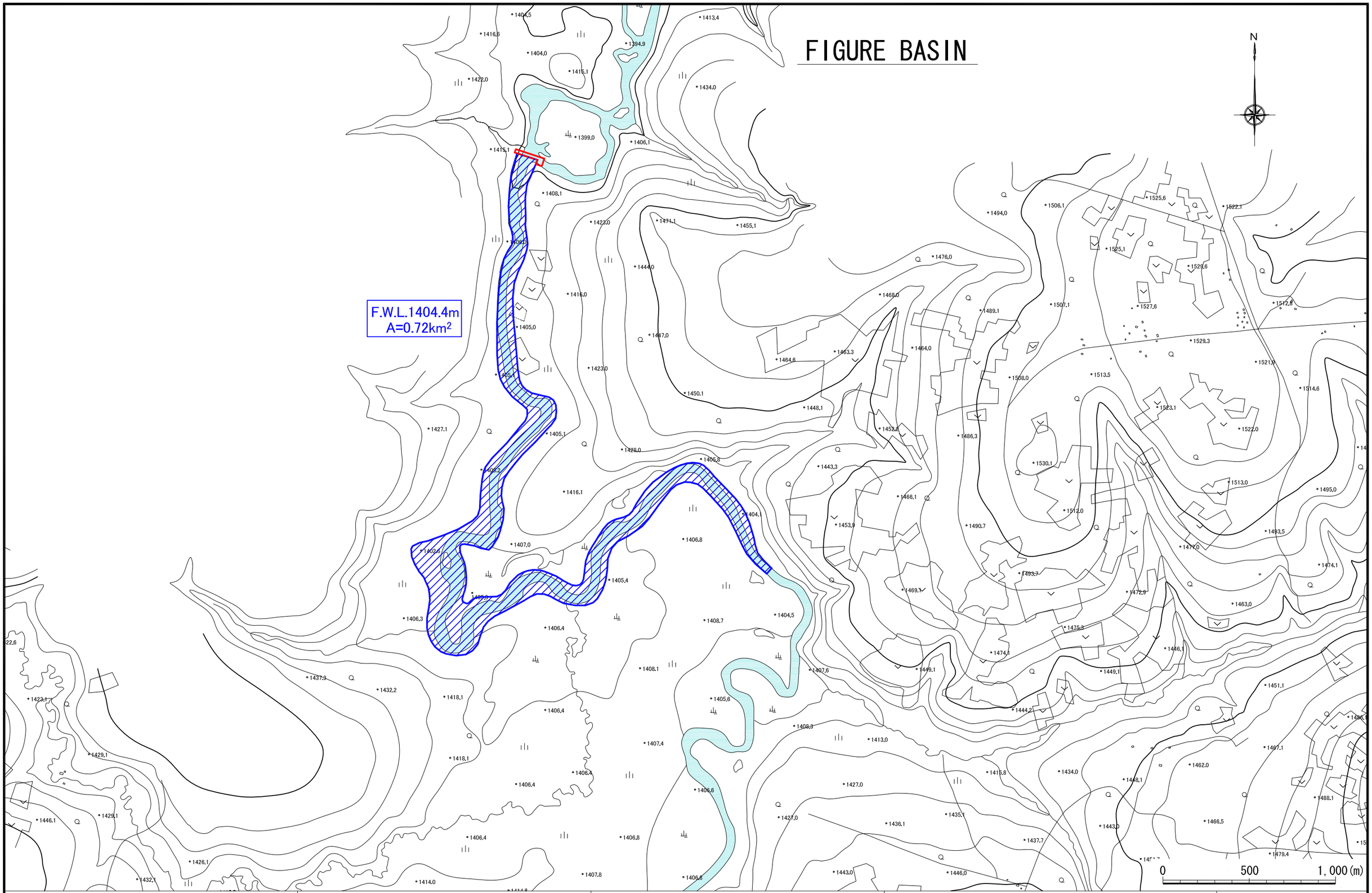

REPUBLIC OF ANGOLA MINISTRY OF ENERGY AND WATER	JICA NEWJEC JAPAN INTERNATIONAL COOPERATION AGENCY NEWJEC Inc.	Project & Location THE PREPARATORY SURVEY ON RURAL ELECTRIFICATION DEVELOPMENT IN THE REPUBLIC OF ANGLA	Drawing Title **CUTATO HYDRO POWER STATION** **FIGURE BASIN** **(S = 1/20,000)**	DWG No. C-001 7.Apr.2011

OVERALL PLAN

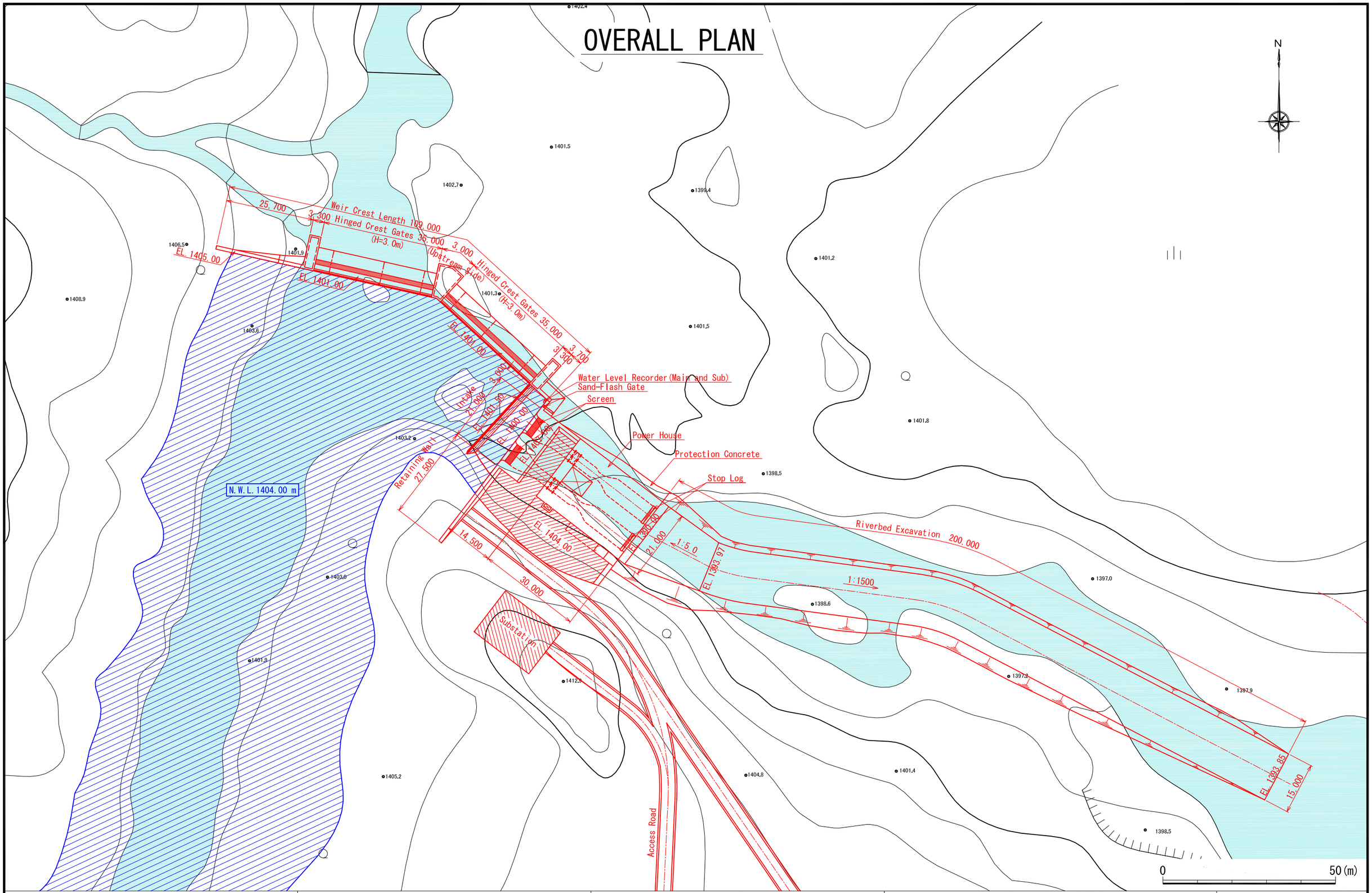

REPUBLIC OF ANGOLA MINISTRY OF ENERGY AND WATER	JICA NEWJEC	JAPAN INTERNATIONAL COOPERATION AGENCY NEWJEC Inc.	Project & Location THE PREPARATORY SURVEY ON RURAL ELECTRIFICATION DEVELOPMENT IN THE REPUBLIC OF ANGLA	Drawing Title **CUTATO HYDRO POWER STATION OVERALL PLAN (S = 1/1,000)**	DWG No. C-002 7.Apr.2011

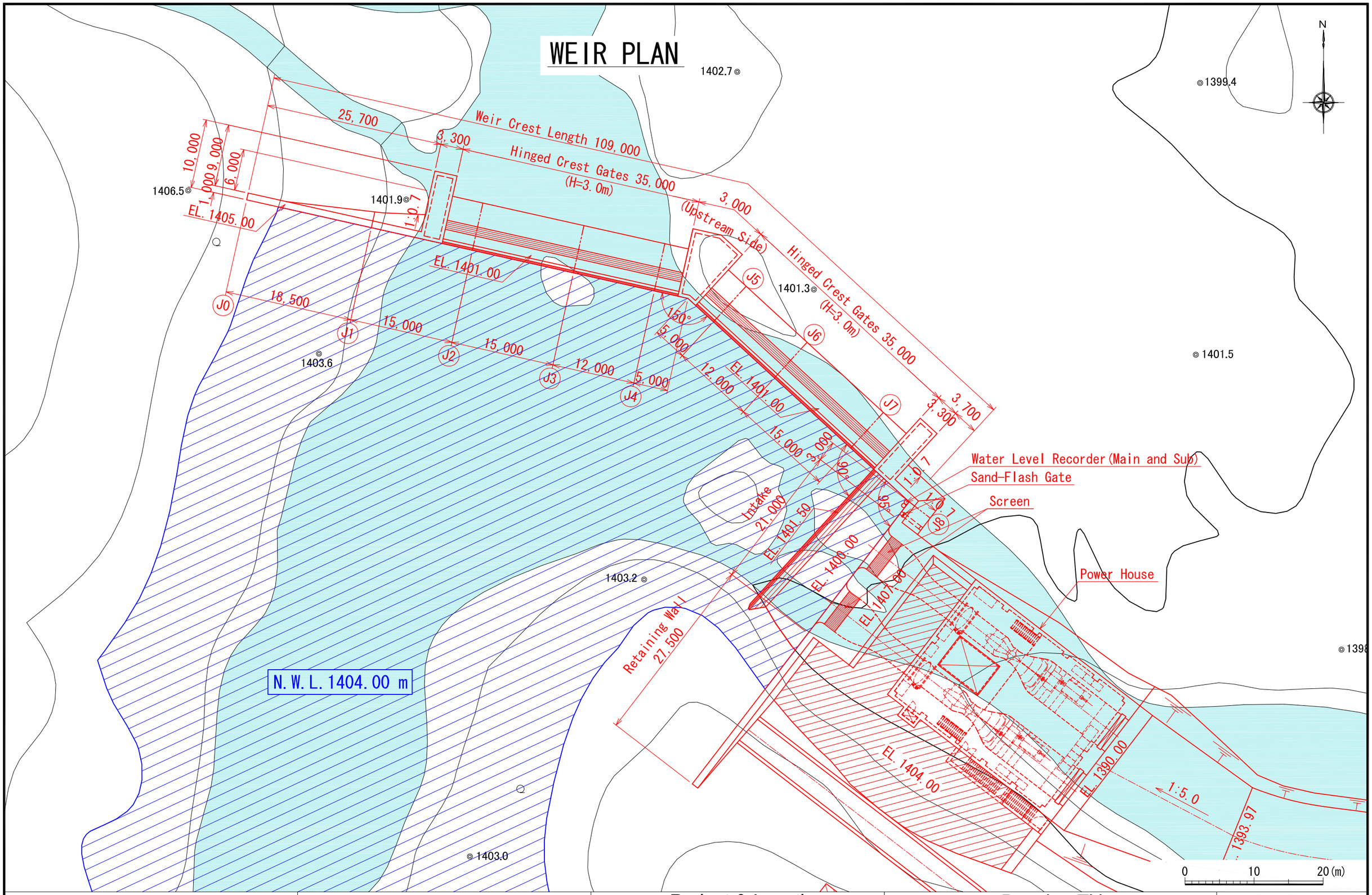

REPUBLIC OF ANGOLA MINISTRY OF ENERGY AND WATER	JICA NEWJEC	JAPAN INTERNATIONAL COOPERATION AGENCY NEWJEC Inc.	Project & Location THE PREPARATORY SURVEY ON RURAL ELECTRIFICATION DEVELOPMENT IN THE REPUBLIC OF ANGLA	Drawing Title **CUTATO HYDRO POWER STATION WEIR PLAN (S = 1/500)**
				DWG No. C-003 7.Apr.2011

FIGURE UPSTREAM WEIR

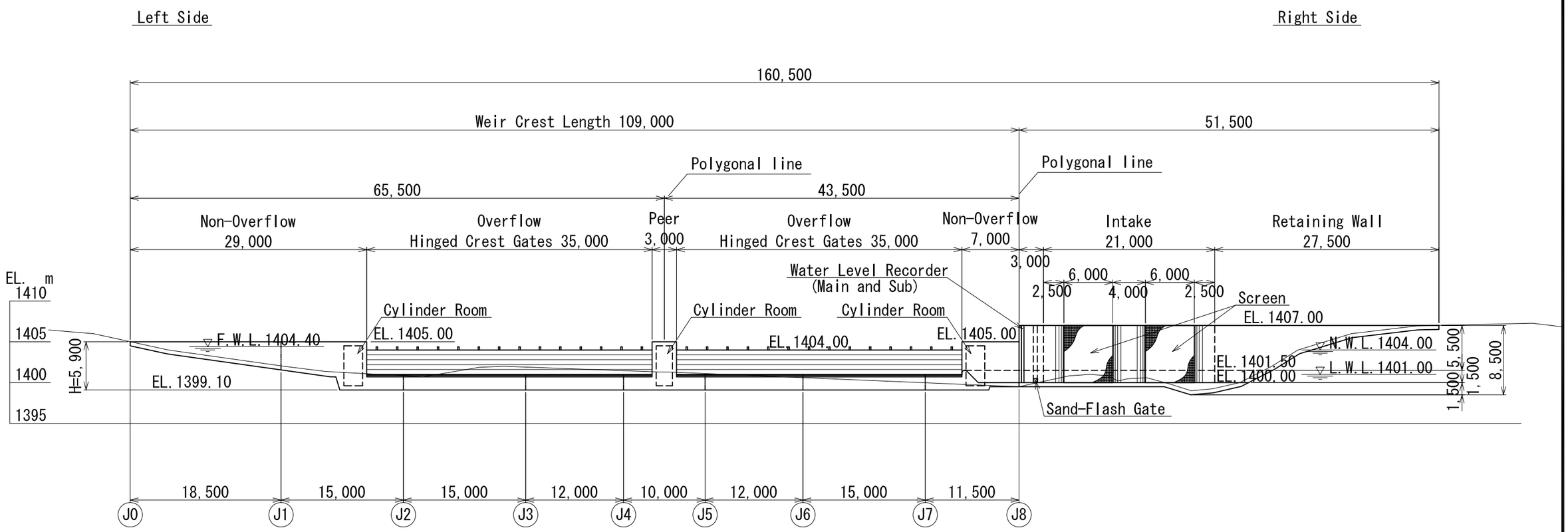

REPUBLIC OF ANGOLA MINISTRY OF ENERGY AND WATER	JICA NEWJEC	JAPAN INTERNATIONAL COOPERATION AGENCY NEWJEC Inc.	Project & Location THE PREPARATORY SURVEY ON RURAL ELECTRIFICATION DEVELOPMENT IN THE REPUBLIC OF ANGLA	Drawing Title **CUTATO HYDRO POWER STATION** **FIGURE UPSTREAM WEIR** **(S = 1/500)**	DWG No. C-004 7.Apr.2011

WEIR STANDARD CROSS SECTION

NON-OVERFLOW SECTION

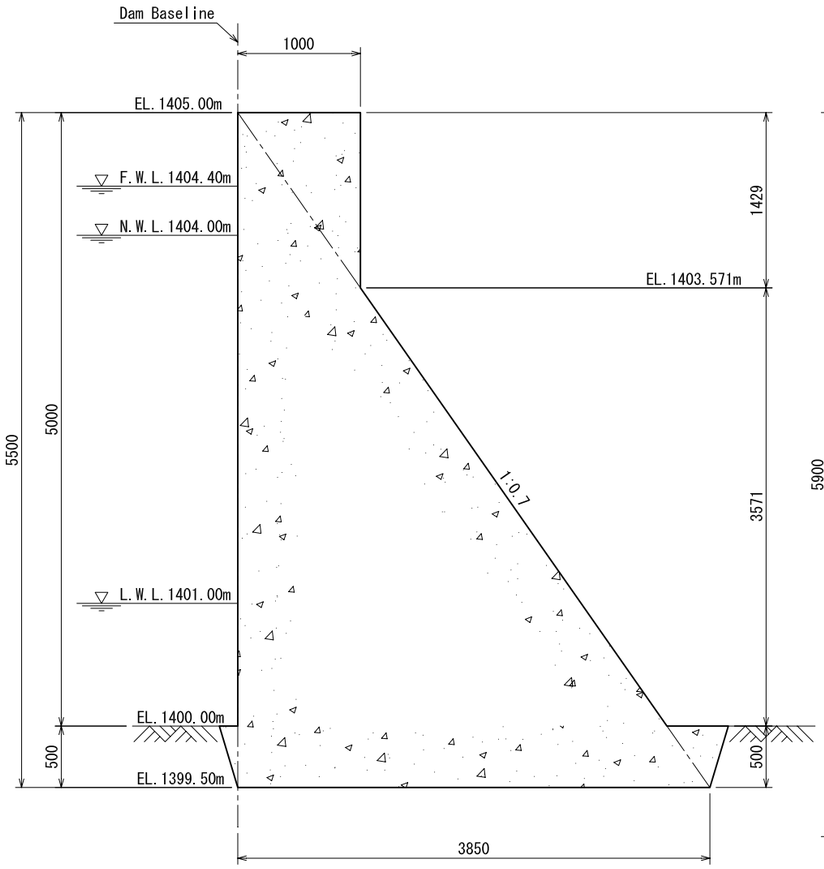

OVERFLOW SECTION and CYLINDER ROOM

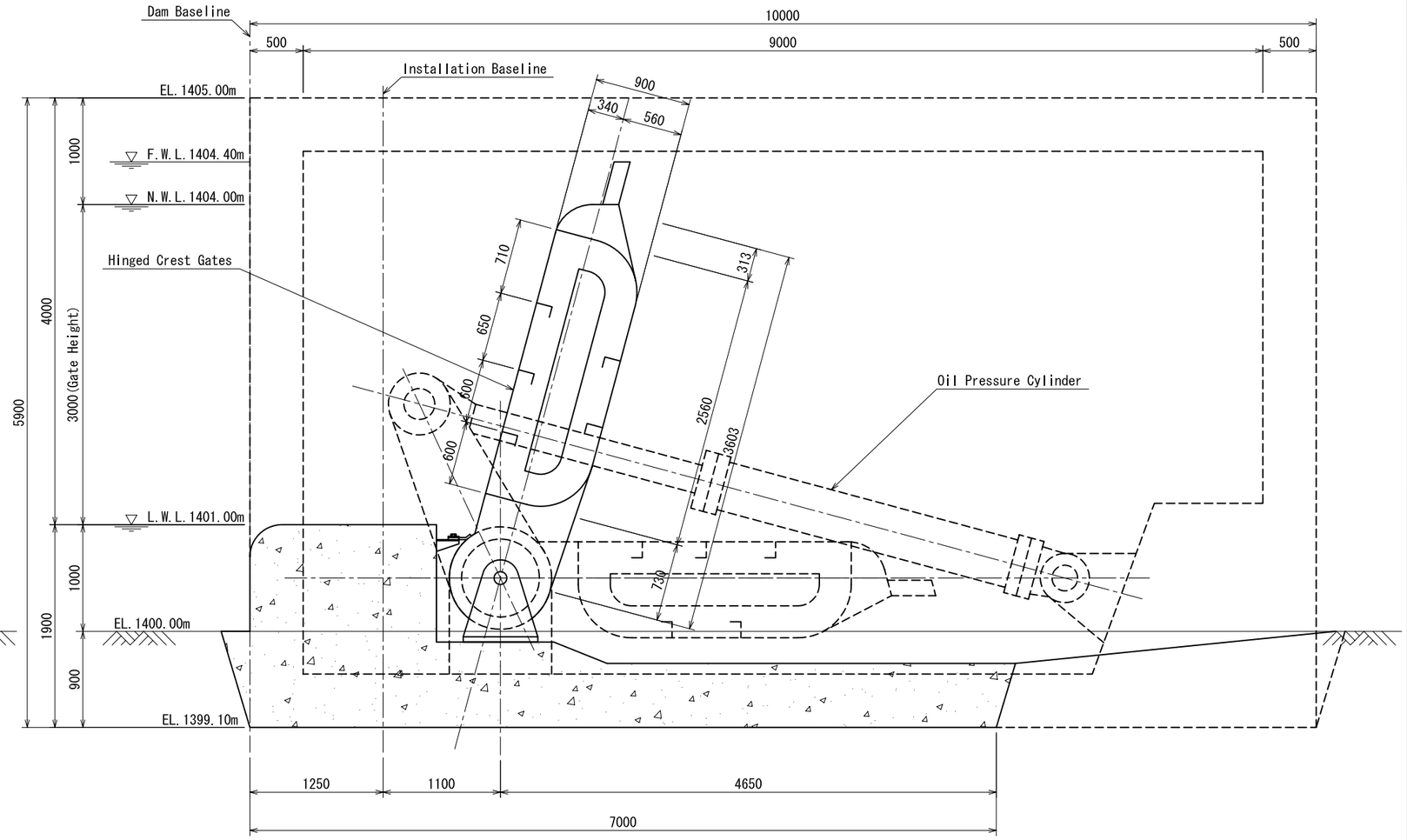

0 3 (m)

REPUBLIC OF ANGOLA MINISTRY OF ENERGY AND WATER	JICA NEWJEC	JAPAN INTERNATIONAL COOPERATION AGENCY NEWJEC Inc.	Project & Location THE PREPARATORY SURVEY ON RURAL ELECTRIFICATION DEVELOPMENT IN THE REPUBLIC OF ANGLA	Drawing Title **CUTATO HYDRO POWER STATION WEIR STANDARD CROSS SECTION (S = 1/50)**
				DWG No. C-005 7.Apr.2011

POWER HOUSE PLAN

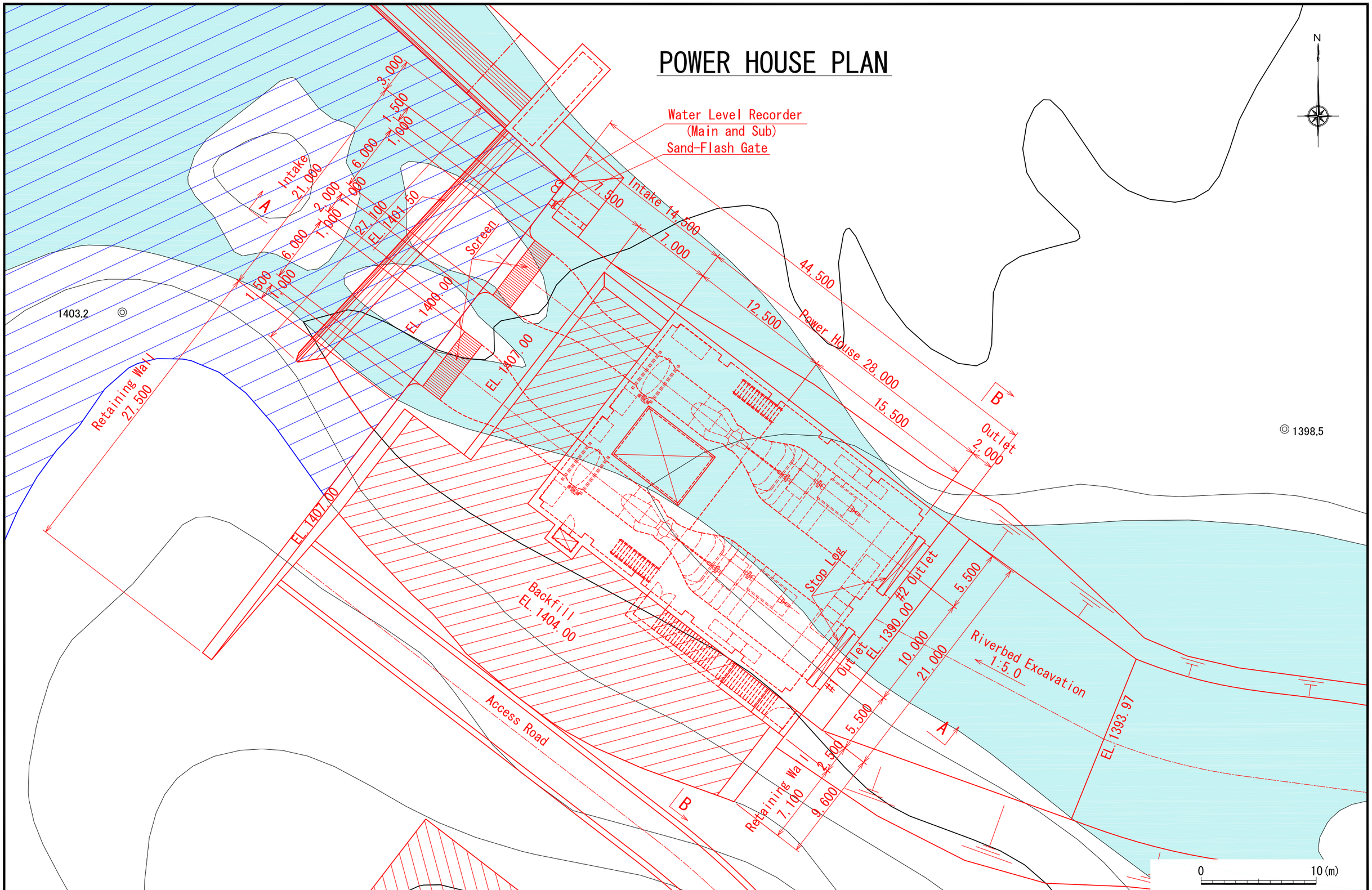

REPUBLIC OF ANGOLA MINISTRY OF ENERGY AND WATER	JICA NEWJEC	JAPAN INTERNATIONAL COOPERATION AGENCY NEWJEC Inc.	Project & Location THE PREPARATORY SURVEY ON RURAL ELECTRIFICATION DEVELOPMENT IN THE REPUBLIC OF ANGLA	Drawing Title **CUTATO HYDRO POWER STATION POWER HOUSE PLAN (S = 1/300)**	DWG No. C-006 7.Apr.2011

VERTICAL SECTION FOR POWER HOUSE
(A - A)

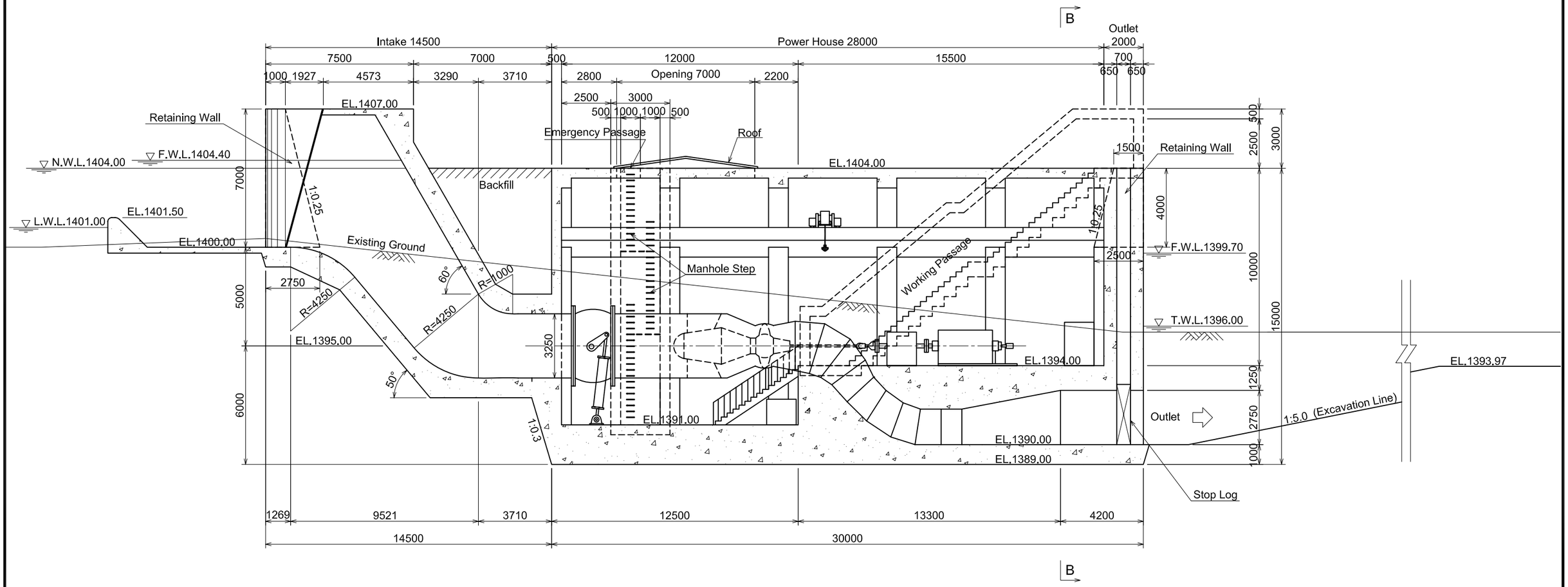

0 5 10(m)

REPUBLIC OF ANGOLA MINISTRY OF ENERGY AND WATER	JICA NEWJEC	JAPAN INTERNATIONAL COOPERATION AGENCY NEWJEC Inc.	Project & Location THE PREPARATORY SURVEY ON RURAL ELECTRIFICATION DEVELOPMENT IN THE REPUBLIC OF ANGLA	Drawing Title **CUTATO HYDRO POWER STATION** **VERTICAL SECTION FOR POWER HOUSE** **(S = 1/200)**	DWG No. C-007 7.Apr.2011

CROSS SECTION FOR POWER HOUSE
(B - B)

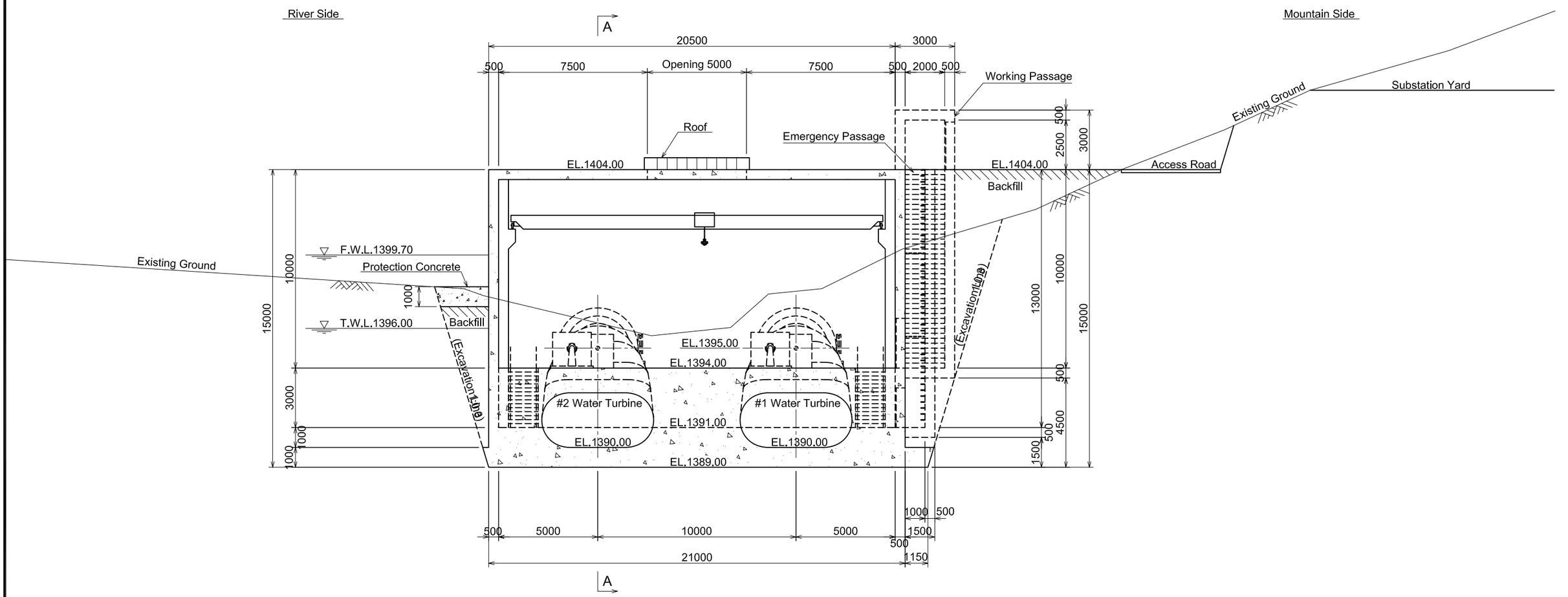

0 5 10(m)

REPUBLIC OF ANGOLA MINISTRY OF ENERGY AND WATER	JICA NEWJEC	JAPAN INTERNATIONAL COOPERATION AGENCY NEWJEC Inc.	Project & Location THE PREPARATORY SURVEY ON RURAL ELECTRIFICATION DEVELOPMENT IN THE REPUBLIC OF ANGLA	Drawing Title **CUTATO HYDRO POWER STATION CROSS SECTION fOR POWER HOUSE (S = 1/200)**	DWG No. C-008 7.Apr.2011

RIVERBED EXCAVATION PLAN S=1/1000

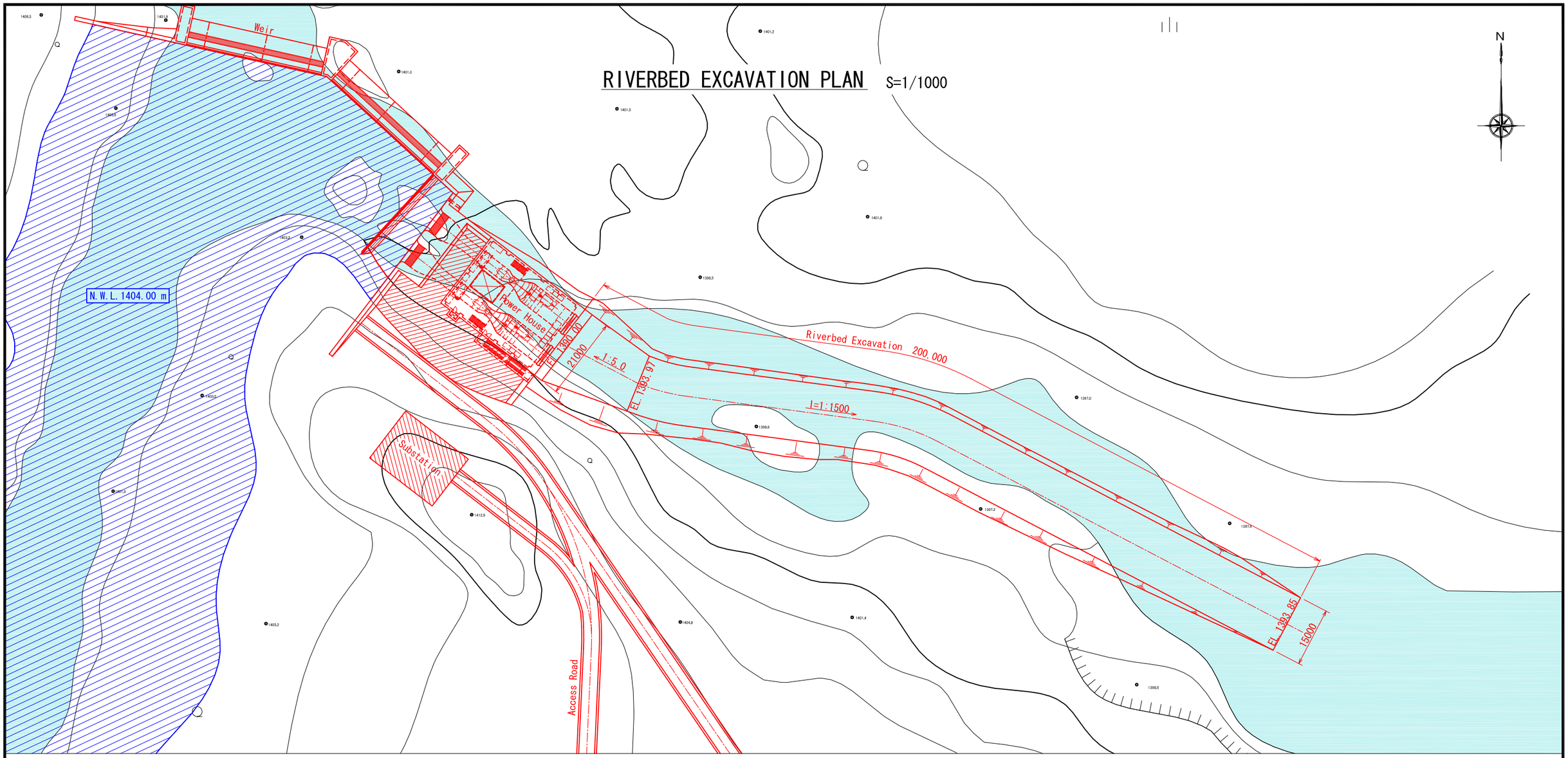

CROSS SECTION FOR RIVERBED EXCAVATION S=1/200

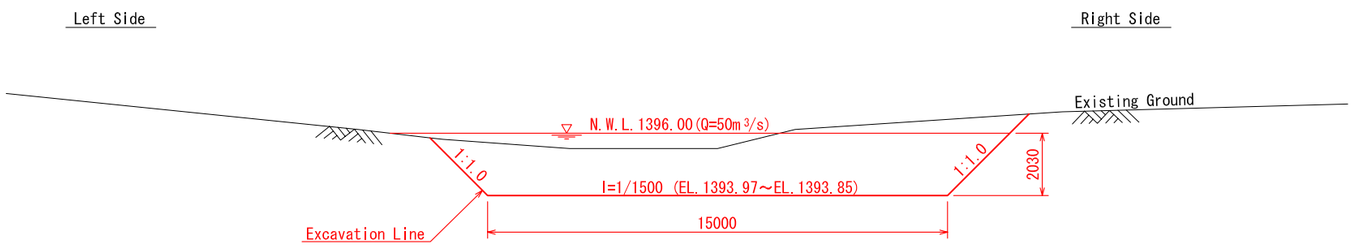

0 S=1/1000 50(m)

0 S=1/200 10(m)

REPUBLIC OF ANGOLA MINISTRY OF ENERGY AND WATER	JICA NEWJEC	JAPAN INTERNATIONAL COOPERATION AGENCY NEWJEC Inc.	Project & Location THE PREPARATORY SURVEY ON RURAL ELECTRIFICATION DEVELOPMENT IN THE REPUBLIC OF ANGLA	Drawing Title **CUTATO HYDRO POWER STATION RIVERBED EXCAVATION PLAN (S = 1/1000 ,1/200)**	DWG No. C-009 7.Apr.2011

Specifications of IP

No.	IA	R(m)	TL(m)	CL(m)
IP. 1	57° 10' 1"	100.000	54.487	99.780
IP. 2	38° 10' 14"	100.000	34.634	66.681
IP. 3	36° 24' 4"	100.000	32.889	63.549
IP. 4	37° 59' 14"	100.000	34.454	66.361
IP. 5	19° 8' 52"	100.000	16.984	33.646
IP. 6	40° 24' 47"	100.000	36.922	70.739
IP. 7	20° 52' 4"	100.000	18.424	36.439
IP. 8	6° 18' 55"	100.000	5.637	11.262
IP. 9	12° 39' 6"	100.000	11.099	22.108
IP.10	8° 1' 46"	100.000	7.119	14.215
IP.11	22° 57' 16"	100.000	20.340	40.133
IP.12	55° 2' 57"	500.000	261.347	481.638
IP.13	15° 47' 57"	500.000	70.011	139.117
IP.14	18° 26' 32"	1000.000	163.059	323.274
IP.15	31° 19' 9"	1000.000	280.538	547.015
IP.16	11° 59' 27"	1000.000	105.619	210.458
IP.17	6° 32' 11"	1000.000	57.343	114.561
IP.18	57° 38' 20"	200.000	110.153	201.372
IP.19	26° 59' 34"	200.000	48.159	94.519
IP.20	4° 27' 27"	200.000	7.902	15.795
IP.21	21° 27' 6"	200.000	37.911	74.933
IP.22	31° 31' 54"	200.000	56.720	110.538
IP.23	5° 47' 15"	200.000	10.175	20.333
IP.24	46° 2' 48"	50.000	21.310	40.288
IP.25	75° 31' 7"	50.000	38.739	65.918
IP.26	55° 29' 8"	50.000	26.309	48.438
IP.27	50° 45' 17"	50.000	23.740	44.329
IP.28	8° 33' 16"	300.000	22.542	45.000
IP.29	75° 42' 23"	50.000	38.899	66.116
IP.30	38° 12' 26"	50.000	17.349	33.399
IP.31	40° 0' 0"	30.000	10.919	20.944
IP.32	45° 7' 2"	50.000	20.773	39.377
IP.33	55° 0' 0"	70.000	36.440	67.195

ACCESS ROAD PLAN S=1/100,000

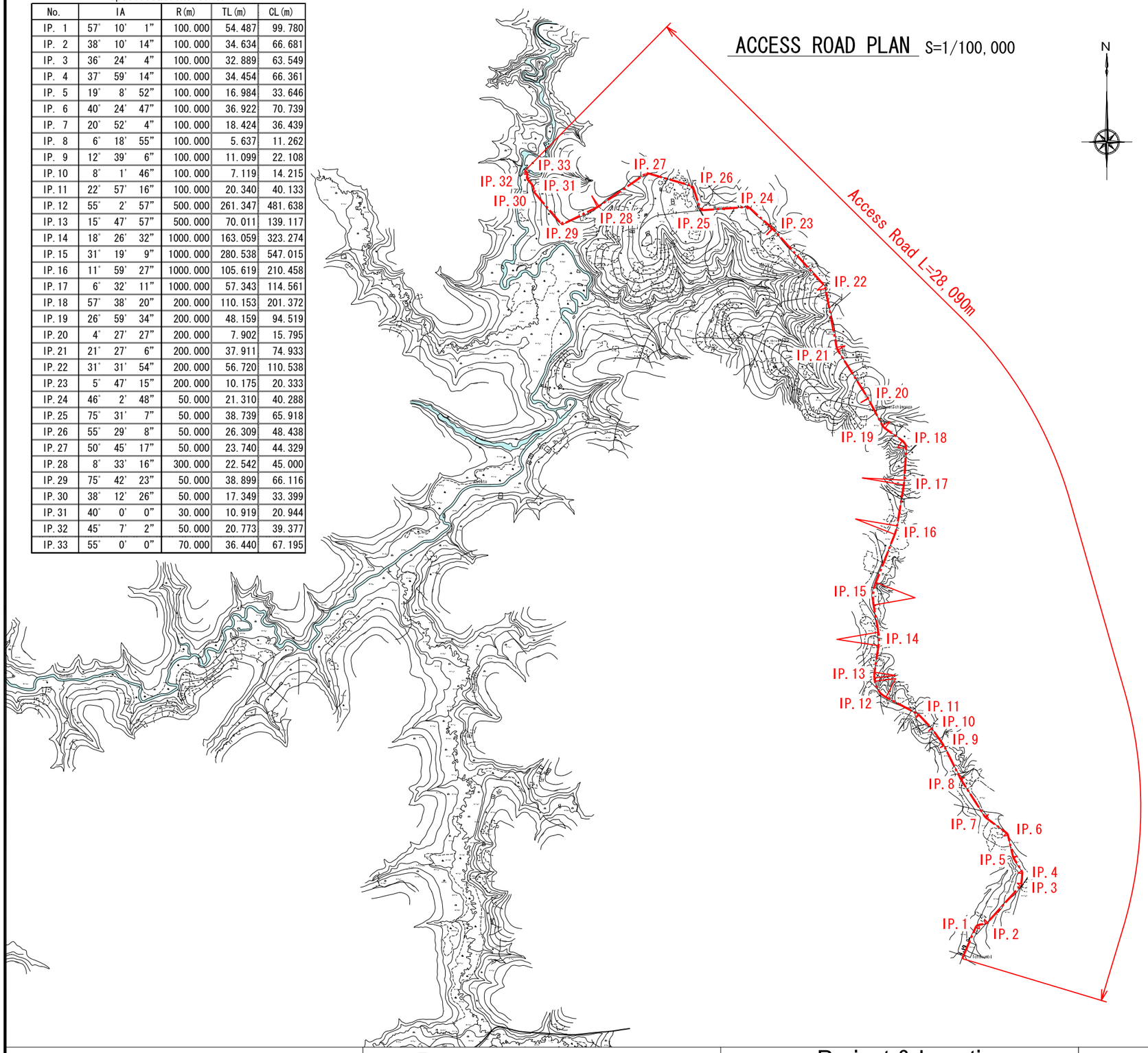

CROSS SECTION FOR ACCESS ROAD S=1/100

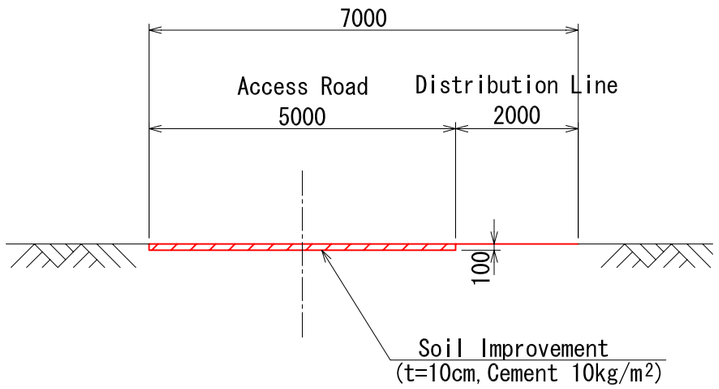

0 S=1/100,000 5,000(m)

0 S=1/100 5(m)

REPUBLIC OF ANGOLA MINISTRY OF ENERGY AND WATER	JICA NEWJEC JAPAN INTERNATIONAL COOPERATION AGENCY NEWJEC Inc.	Project & Location THE PREPARATORY SURVEY ON RURAL ELECTRIFICATION DEVELOPMENT IN THE REPUBLIC OF ANGLA	Drawing Title **CUTATO HYDRO POWER STATION ACCESS ROAD PLAN (S = 1/100,000 ,1/100)**	DWG No. C-010 7.Apr.2011

TEMPORARY FACILITIES (1)

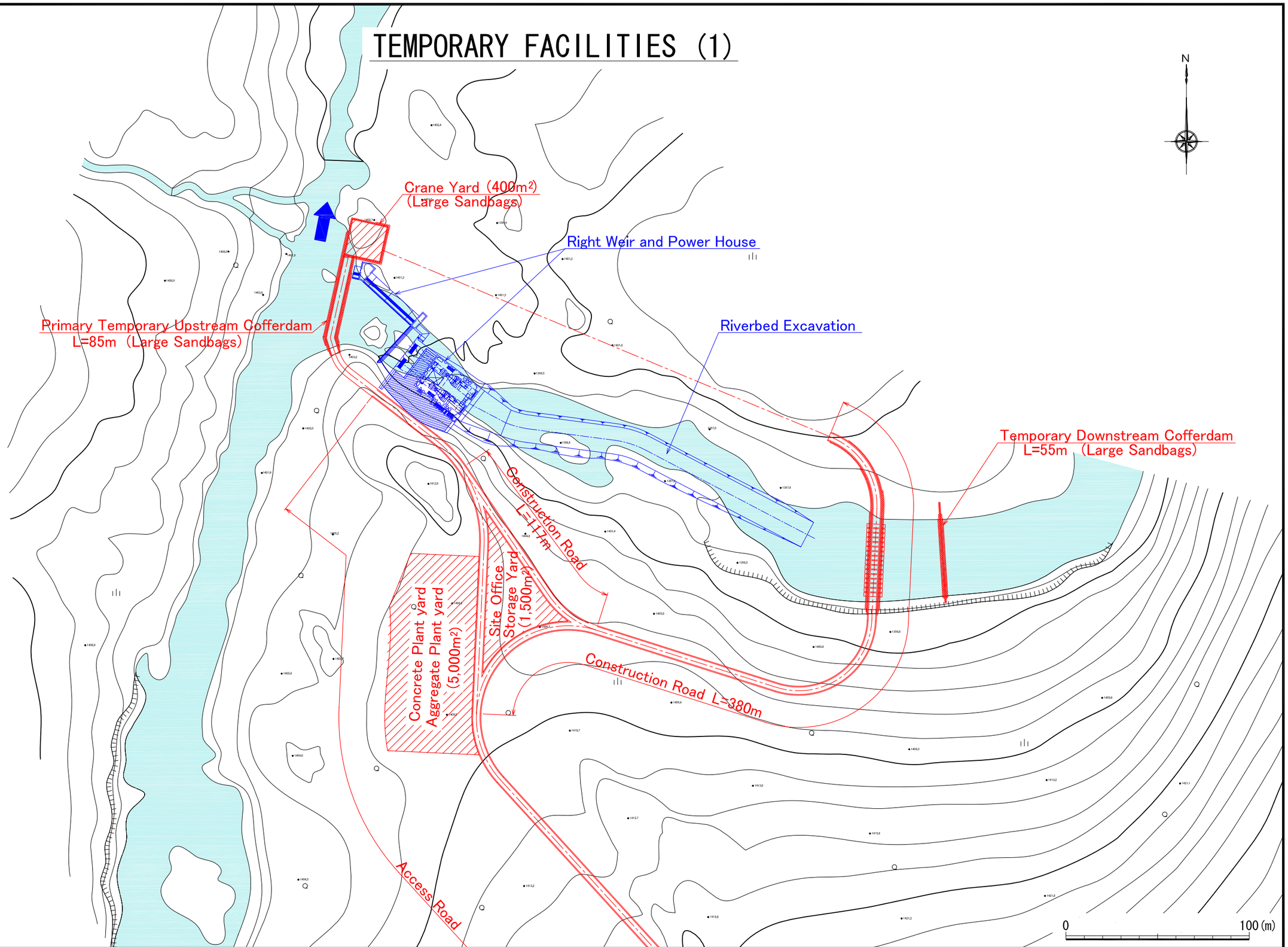

REPUBLIC OF ANGOLA MINISTRY OF ENERGY AND WATER	JICA NEWJEC	JAPAN INTERNATIONAL COOPERATION AGENCY NEWJEC Inc.	Project & Location THE PREPARATORY SURVEY ON RURAL ELECTRIFICATION DEVELOPMENT IN THE REPUBLIC OF ANGLA	Drawing Title **CUTATO HYDRO POWER STATION TEMPORARY FACILITIES (1)** **(S = 1/2,000)**	DWG No. C-011 7.Apr.2011

TEMPORARY FACILITIES (2)

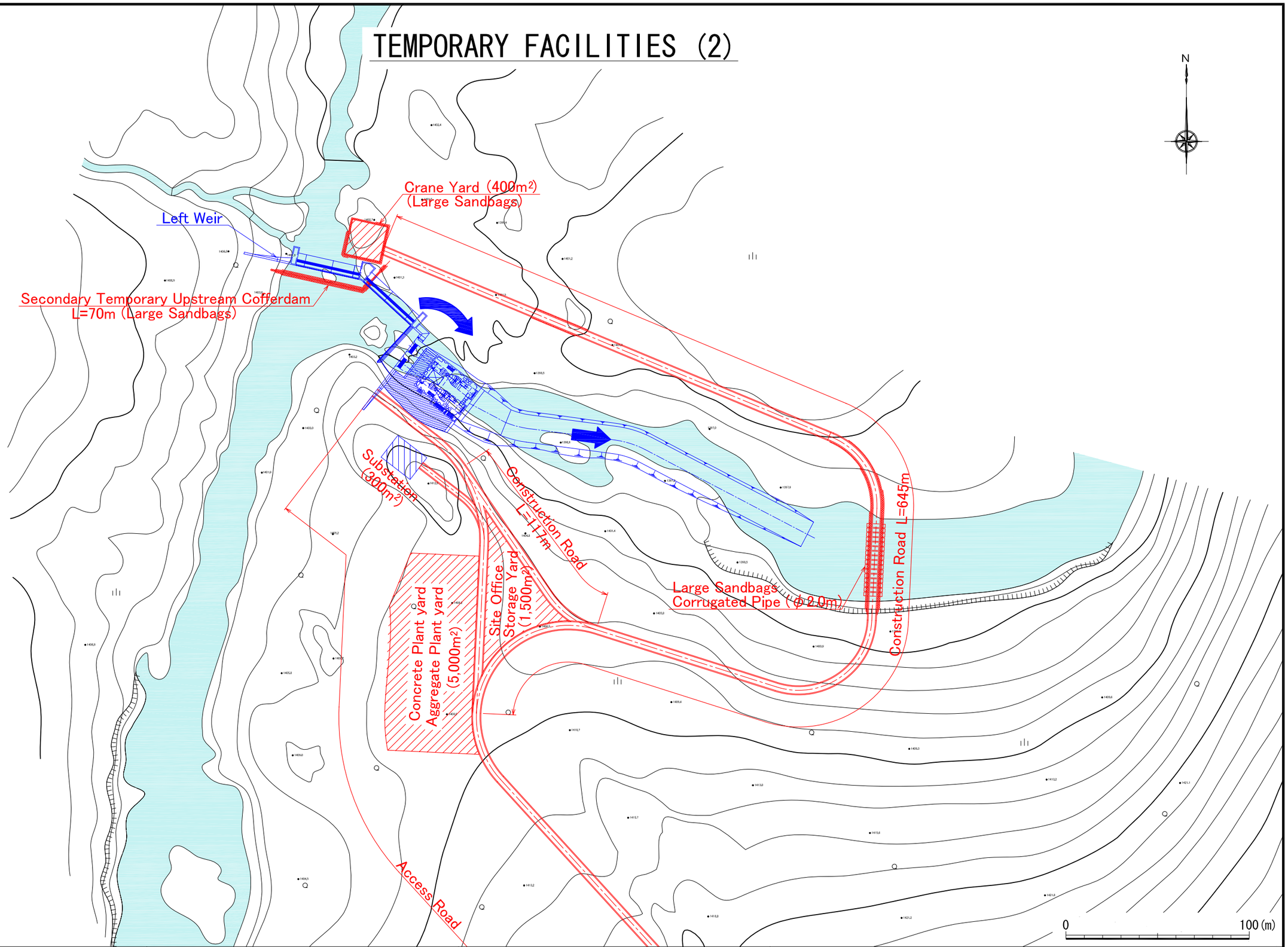

REPUBLIC OF ANGOLA MINISTRY OF ENERGY AND WATER	JICA NEWJEC	JAPAN INTERNATIONAL COOPERATION AGENCY NEWJEC Inc.	Project & Location THE PREPARATORY SURVEY ON RURAL ELECTRIFICATION DEVELOPMENT IN THE REPUBLIC OF ANGLA	Drawing Title **CUTATO HYDRO POWER STATION TEMPORARY FACILITIES (2)** **(S = 1/2,000)**	DWG No. C-012 7.Apr.2011

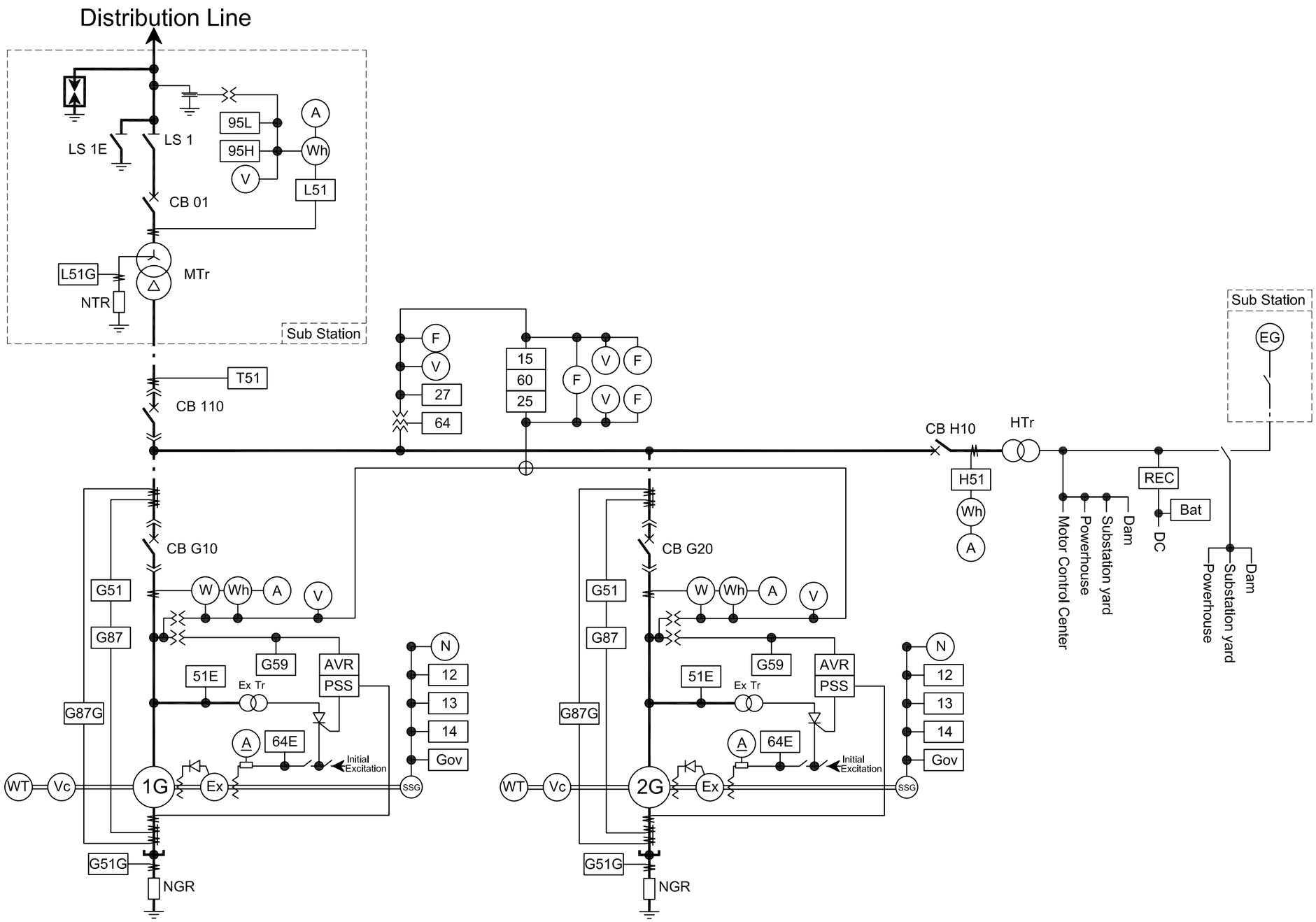

REPUBLIC OF ANGOLA MINISTRY OF ENERGY AND WATER	JICA NEWJEC	JAPAN INTERNATIONAL COOPERATION AGENCY NEWJEC Inc.	Project & Location THE PREPARATORY SURVEY ON RURAL ELECTRIFICATION DEVELOPMENT IN THE REPUBLIC OF ANGLA	Drawing Title **CUTATO HYDRO POWER STATION SINGLE LINE DIAGRAM**	DWG No. E-001 7.Apr.2011

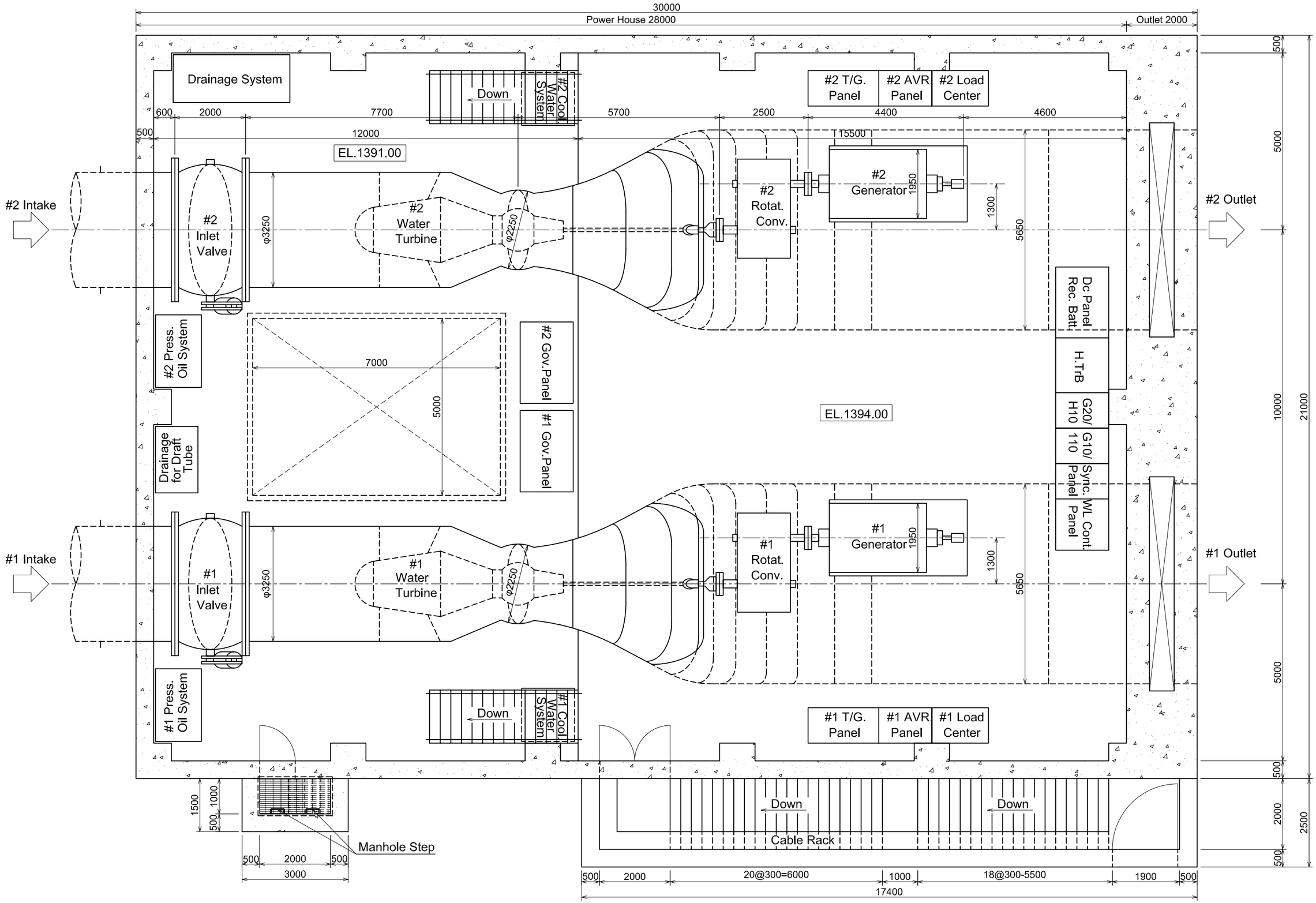

REPUBLIC OF ANGOLA MINISTRY OF ENERGY AND WATER	JICA NEWJEC	JAPAN INTERNATIONAL COOPERATION AGENCY NEWJEC Inc.	Project & Location THE PREPARATORY SURVEY ON RURAL ELECTRIFICATION DEVELOPMENT IN THE REPUBLIC OF ANGLA	Drawing Title **CUTATO HYDRO POWER STATION POWER HOUSE LAYOUT (S = 1/100)**
				DWG No. E-002 7.Apr.2011

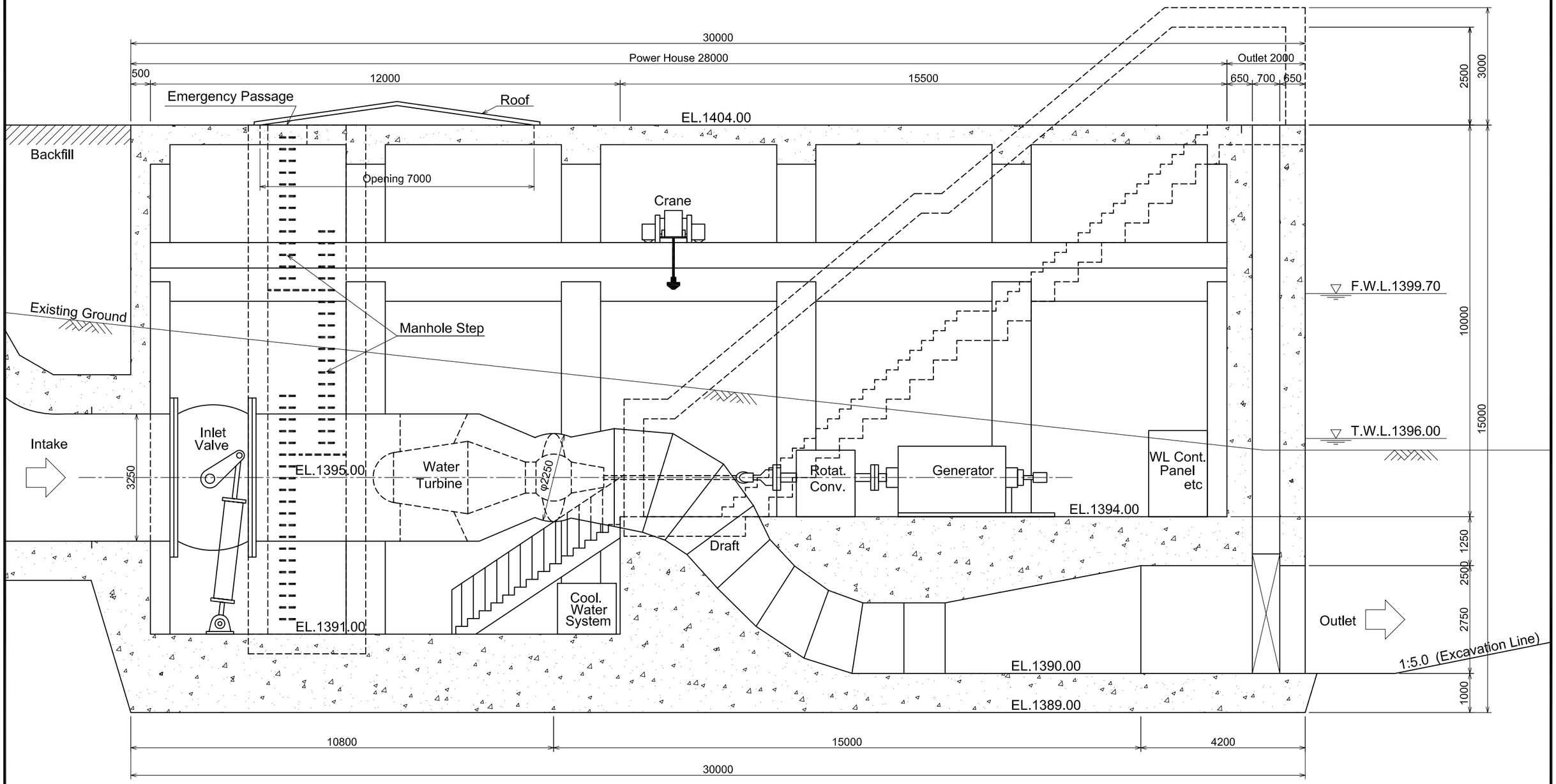

REPUBLIC OF ANGOLA MINISTRY OF ENERGY AND WATER	JICA NEWJEC	JAPAN INTERNATIONAL COOPERATION AGENCY NEWJEC Inc.	Project & Location THE PREPARATORY SURVEY ON RURAL ELECTRIFICATION DEVELOPMENT IN THE REPUBLIC OF ANGLA	Drawing Title **CUTATO HYDRO POWER STATION VERTICAL SECTION FOR POWER HOUSE (S = 1/100)**	DWG No. E-003 7.Apr.2011

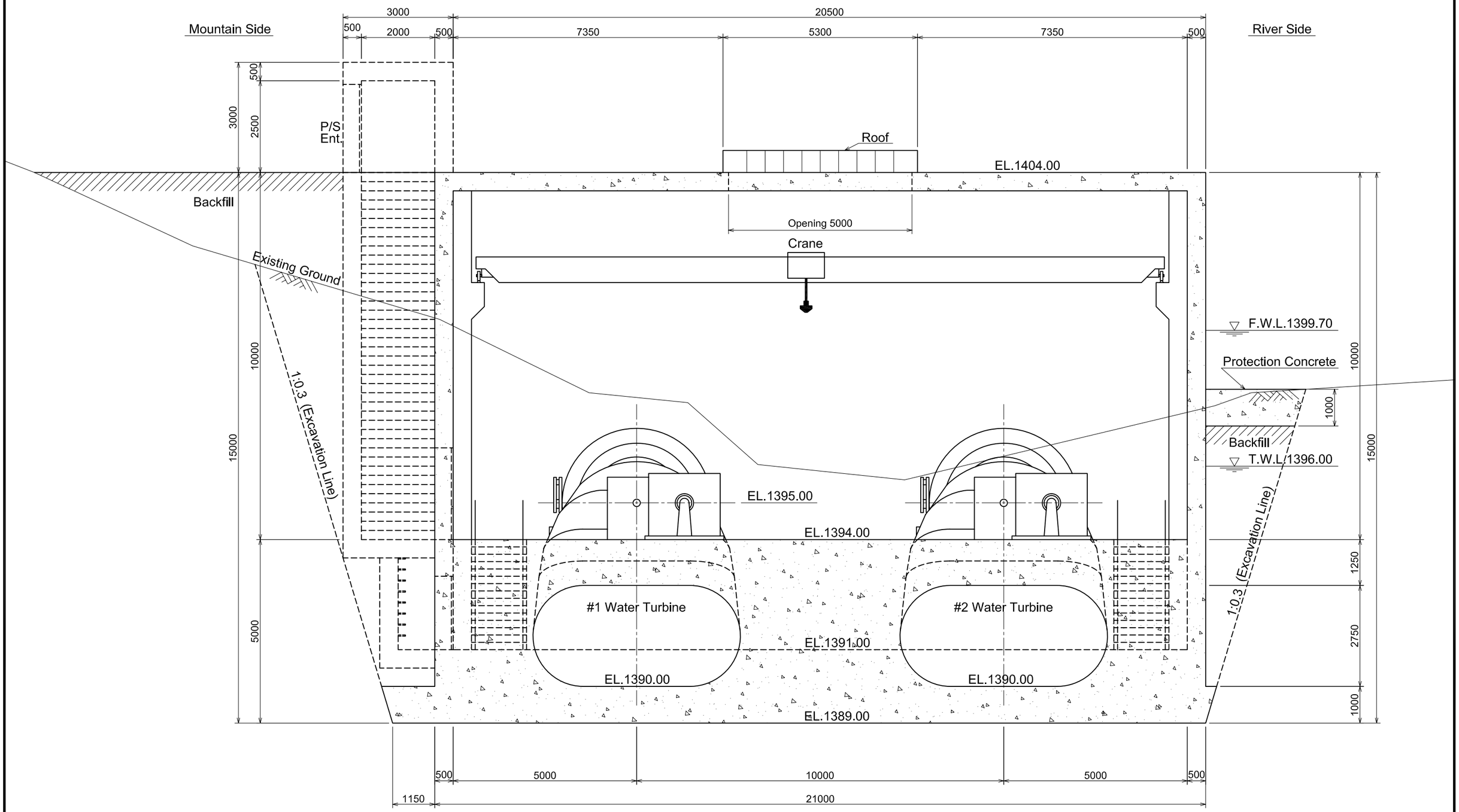

REPUBLIC OF ANGOLA MINISTRY OF ENERGY AND WATER	JICA NEWJEC	JAPAN INTERNATIONAL COOPERATION AGENCY NEWJEC Inc.	Project & Location THE PREPARATORY SURVEY ON RURAL ELECTRIFICATION DEVELOPMENT IN THE REPUBLIC OF ANGLA	Drawing Title **CUTATO HYDRO POWER STATION CROSS SECTION fOR POWER HOUSE (S = 1/100)**	DWG No. E-004 7.Apr.2011

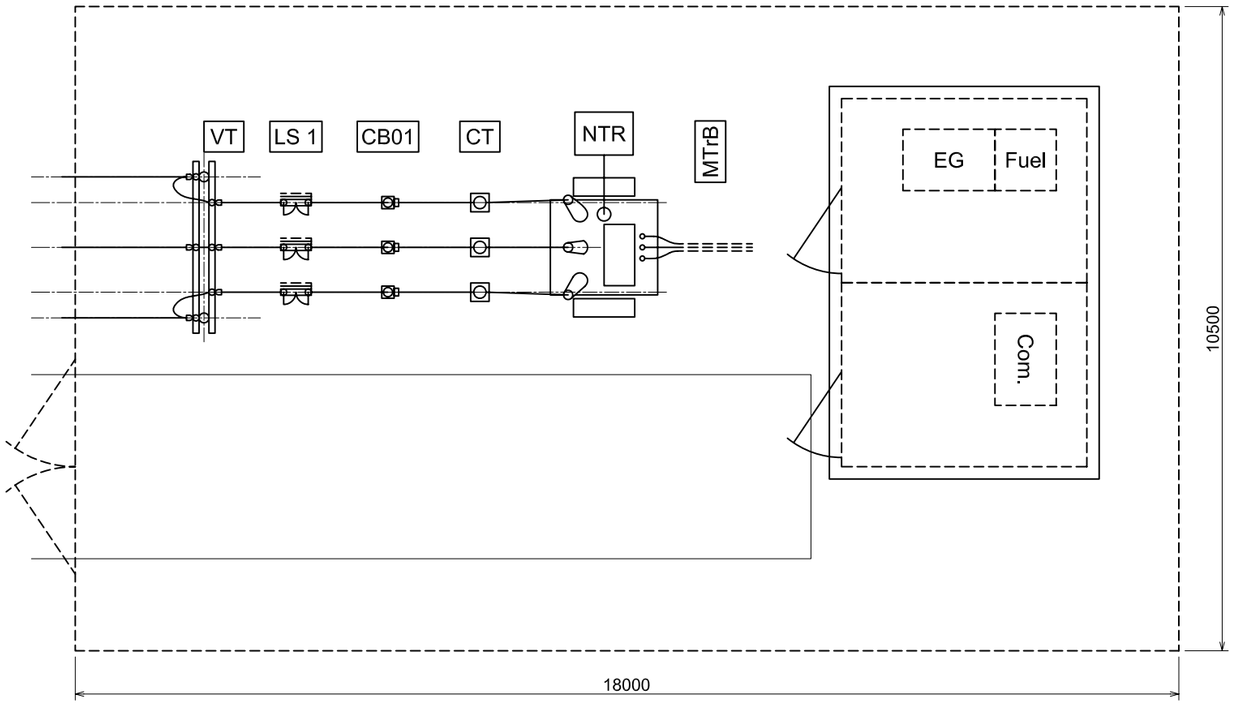

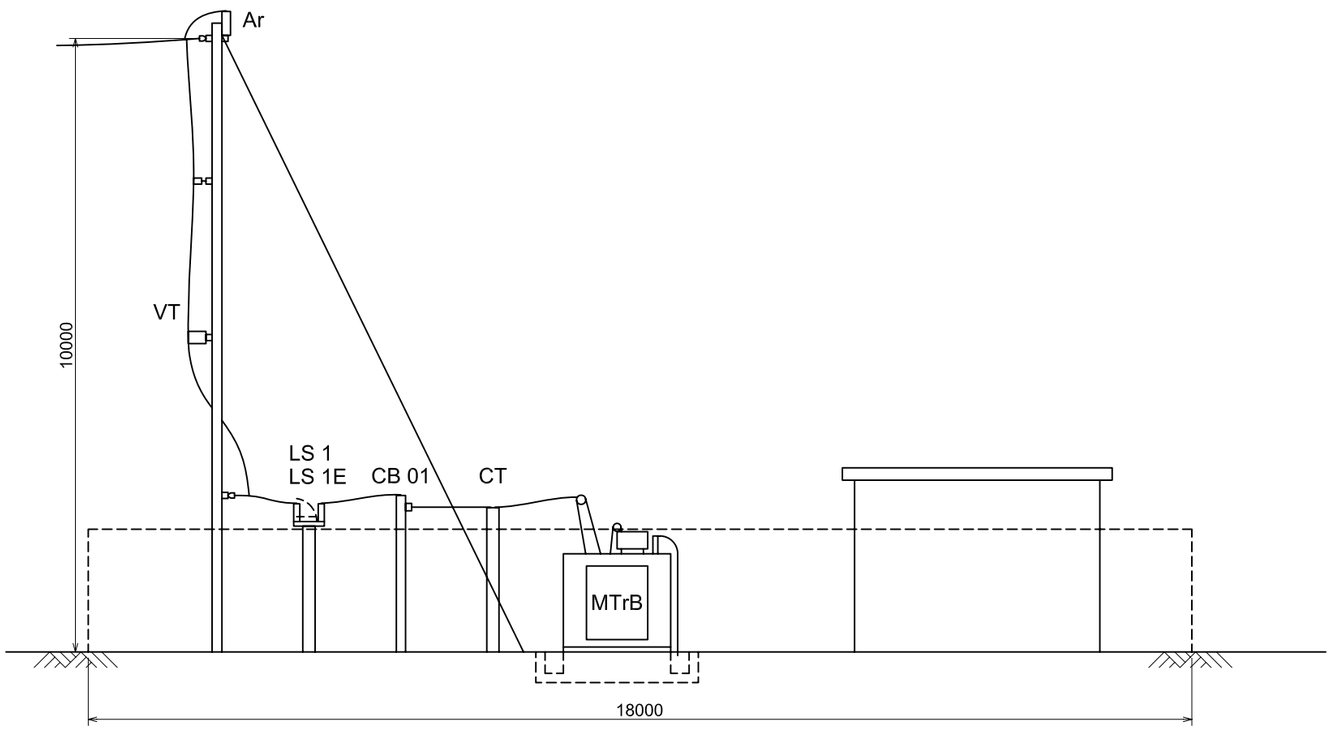

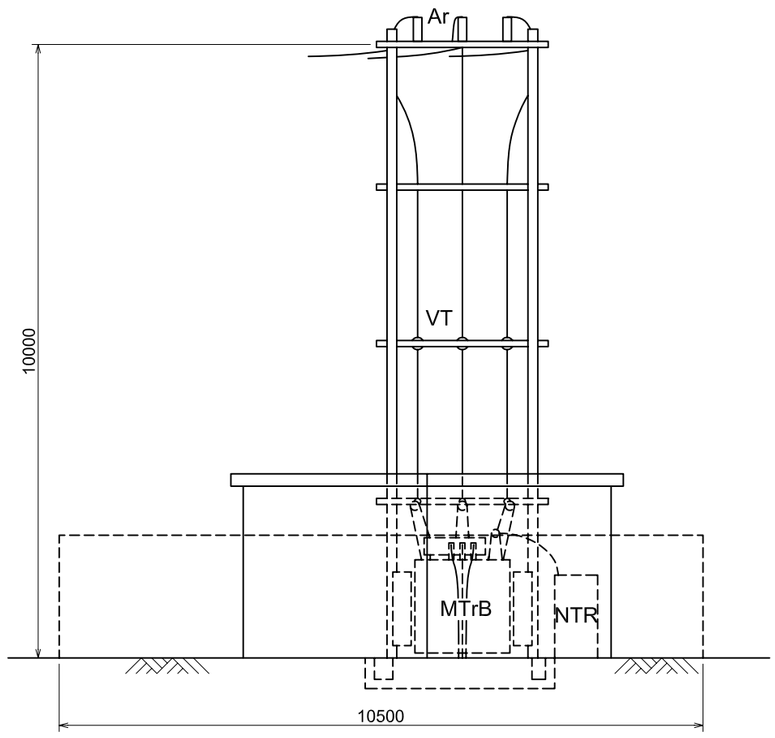

REPUBLIC OF ANGOLA MINISTRY OF ENERGY AND WATER	JICA NEWJEC JAPAN INTERNATIONAL COOPERATION AGENCY NEWJEC Inc.	Project & Location THE PREPARATORY SURVEY ON RURAL ELECTRIFICATION DEVELOPMENT IN THE REPUBLIC OF ANGLA	Drawing Title **CUTATO HYDRO POWER STATION SUBSTATION LAYOUT (S = 1/100)**	DWG No. E-005 7.Apr.2011

HIGH VOLTAGE DISTRIBUTION LINE ROUTE S=1/100,000
(CUTATO TO ANDULO)

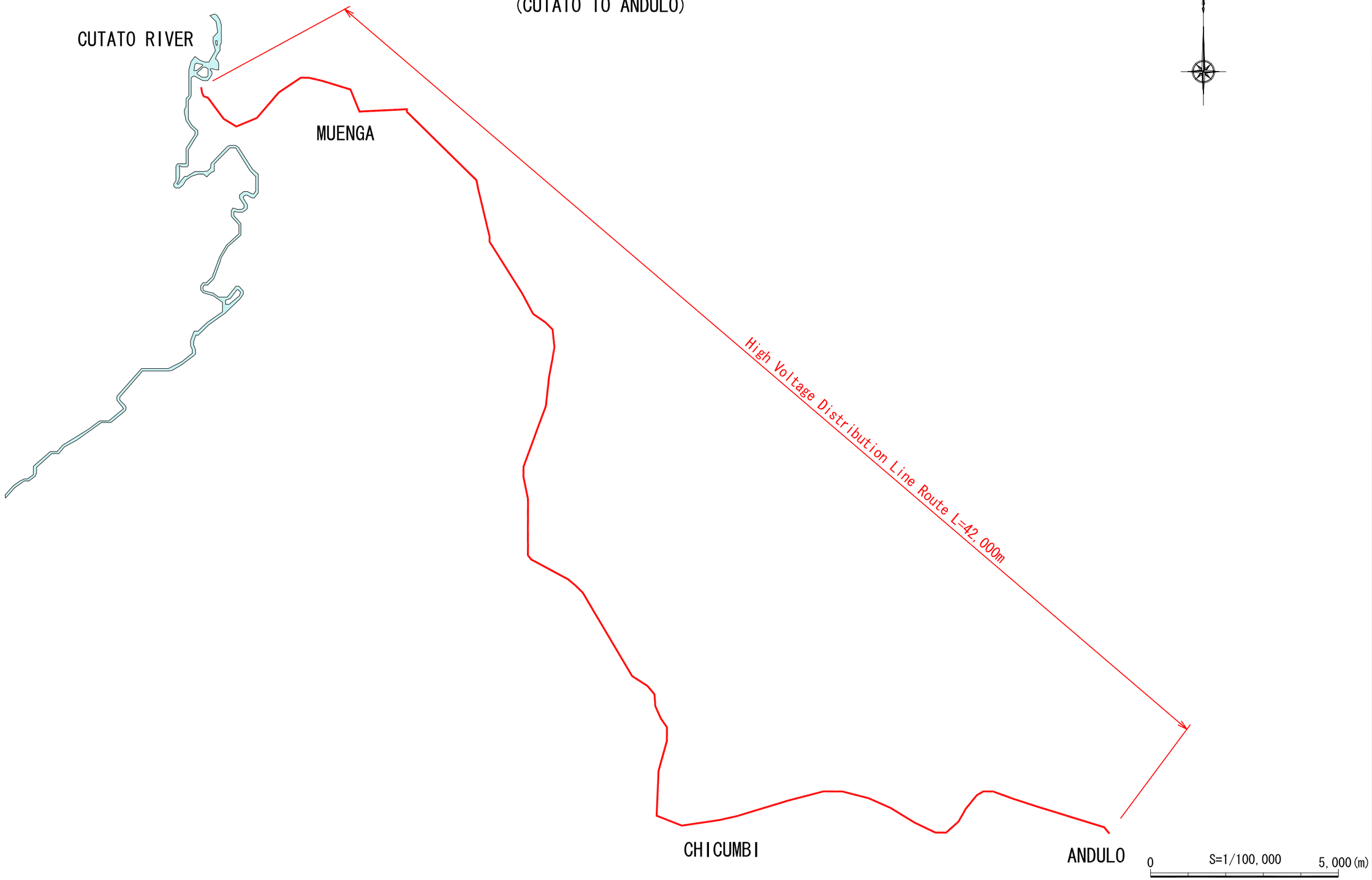

REPUBLIC OF ANGOLA MINISTRY OF ENERGY AND WATER	JICA NEWJEC	JAPAN INTERNATIONAL COOPERATION AGENCY NEWJEC Inc.	Project & Location THE PREPARATORY SURVEY ON RURAL ELECTRIFICATION DEVELOPMENT IN THE REPUBLIC OF ANGLA	Drawing Title **DISTRIBUTION LINE ROUTE CUTATO TO ANDULO (1/100,000)**	DWG No. T-001 7.Apr.2011

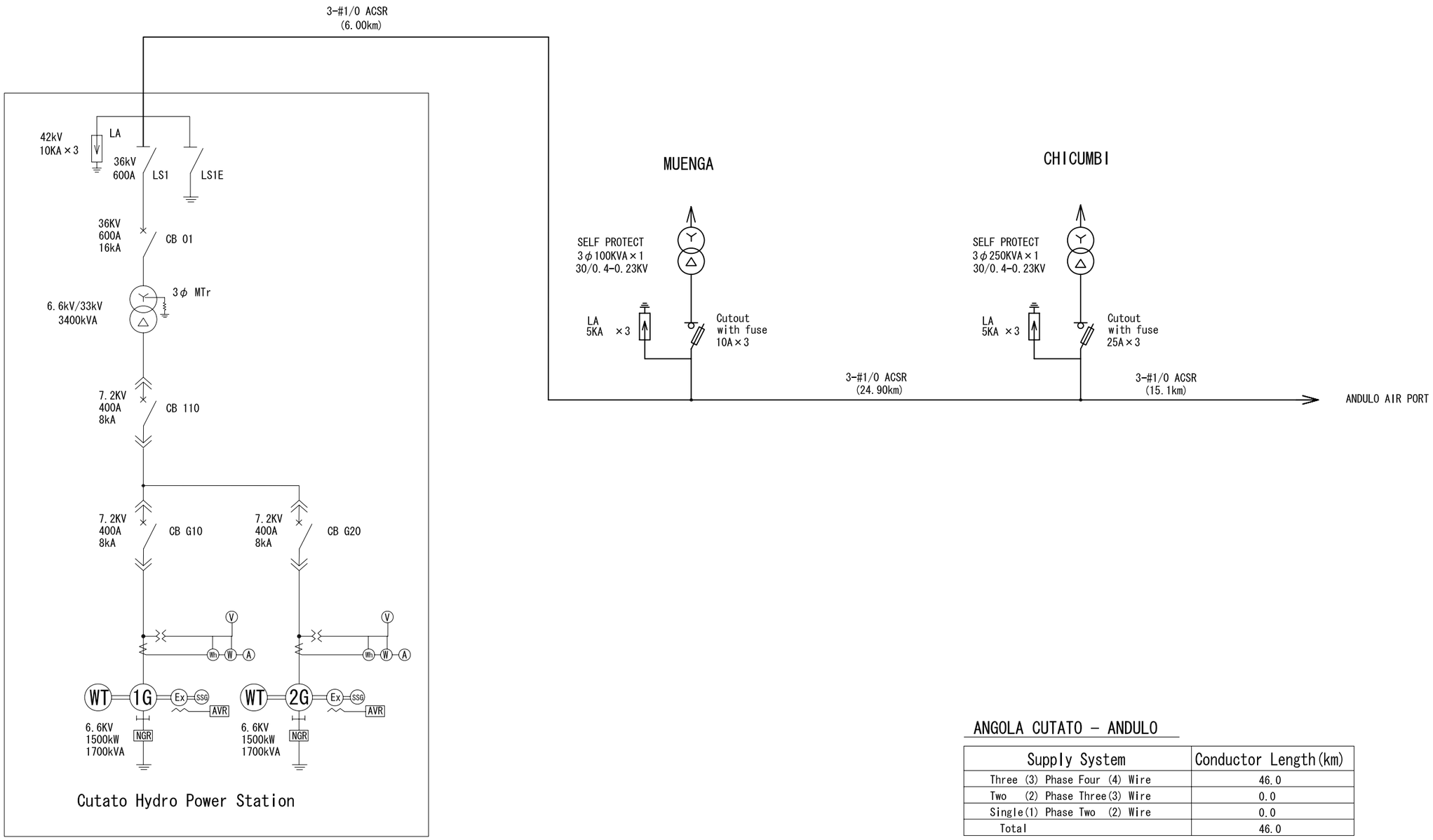

ANGOLA CUTATO - ANDULO

Supply System	Conductor Length(km)
Three (3) Phase Four (4) Wire	46.0
Two (2) Phase Three(3) Wire	0.0
Single(1) Phase Two (2) Wire	0.0
Total	46.0

REPUBLIC OF ANGOLA MINISTRY OF ENERGY AND WATER	JICA NEWJEC	JAPAN INTERNATIONAL COOPERATION AGENCY NEWJEC Inc.	Project & Location THE PREPARATORY SURVEY ON RURAL ELECTRIFICATION DEVELOPMENT IN THE REPUBLIC OF ANGLA	Drawing Title **SINGLE LINE DIAGRAM DISTRIBUTION LINE (30kV) FROM CUTATO TO ANDULO**	DWG No. T-002 7.Apr.2011

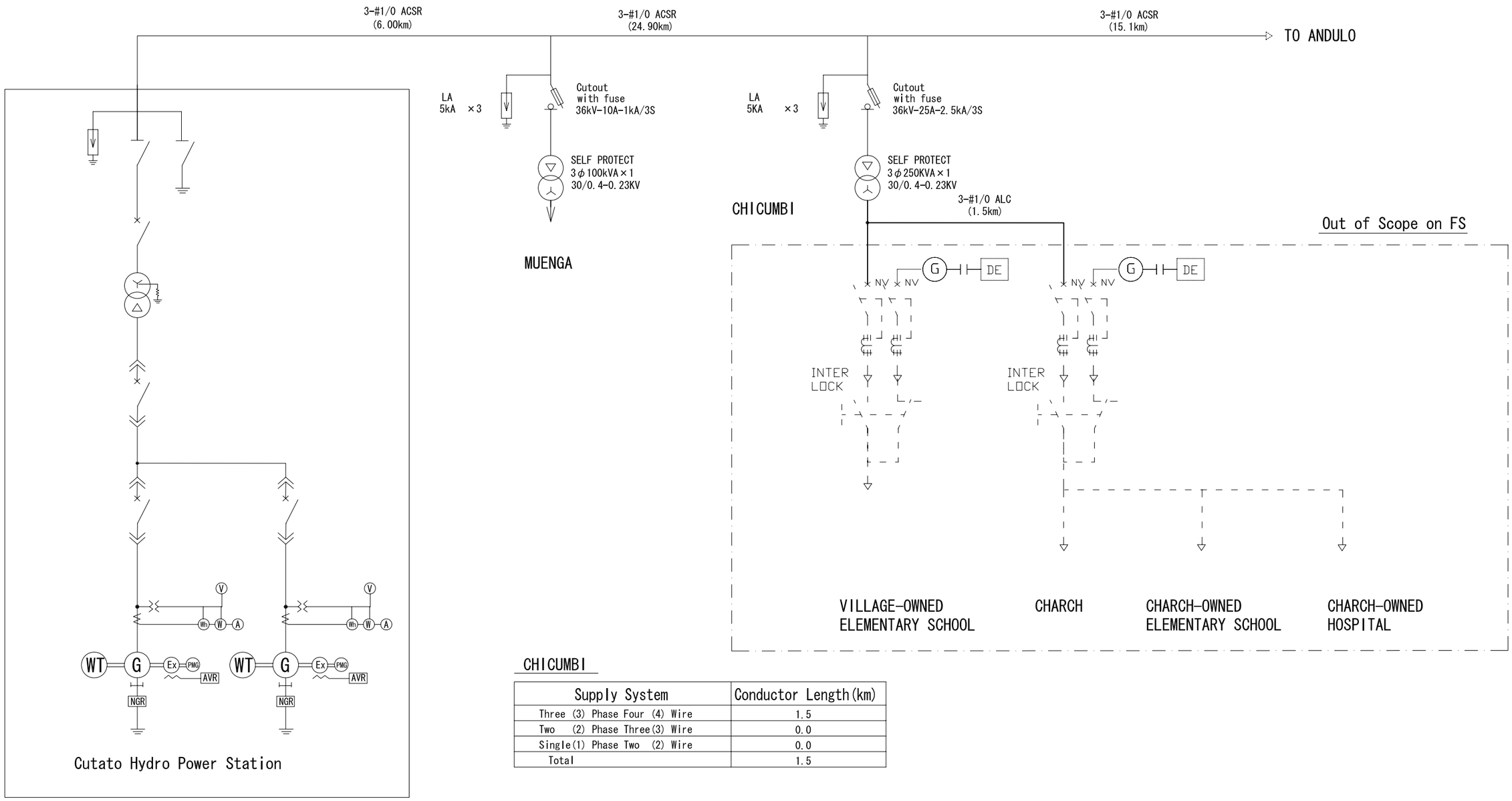

CHICUMBI

Supply System	Conductor Length(km)
Three (3) Phase Four (4) Wire	1.5
Two (2) Phase Three(3) Wire	0.0
Single(1) Phase Two (2) Wire	0.0
Total	1.5

REPUBLIC OF ANGOLA MINISTRY OF ENERGY AND WATER	JICA NEWJEC	JAPAN INTERNATIONAL COOPERATION AGENCY NEWJEC Inc.	Project & Location THE PREPARATORY SURVEY ON RURAL ELECTRIFICATION DEVELOPMENT IN THE REPUBLIC OF ANGLA	Drawing Title **SINGLE LINE DIAGRAM DISTRIBUTION LINE(400-230V) LOW VOLTAGE FOR CHICUMBI**	DWG No. T-003 7.Apr.2011

POLE DRAWING (CUTATO - ANDULO)

30kV. THREE PHASE 0° TO 5° ANGLE (VERTICAL TYPE)

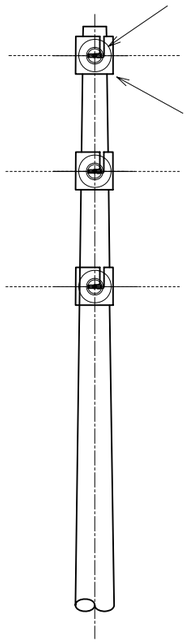

ELEVATION

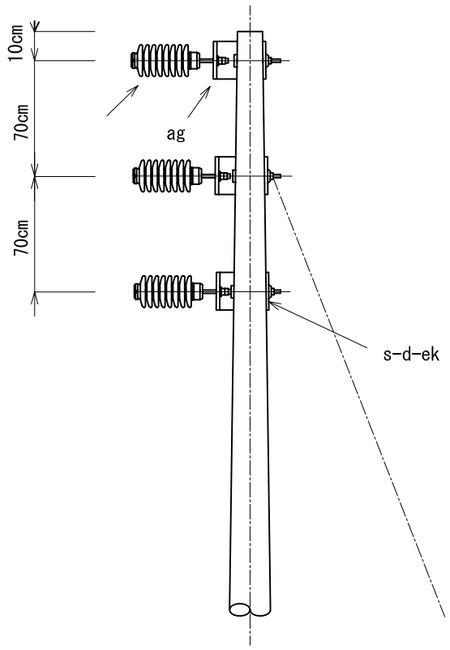

SIDE VIEW

Item	Materials
a-	Line Post Pin Type Insulator
ag-	Angle
d-	hole washer
s-	Single arm bolt
ek-	lock nut

30kV, THREE PHASE 30° TO 60° ANGLE (VERTICAL TYPE)

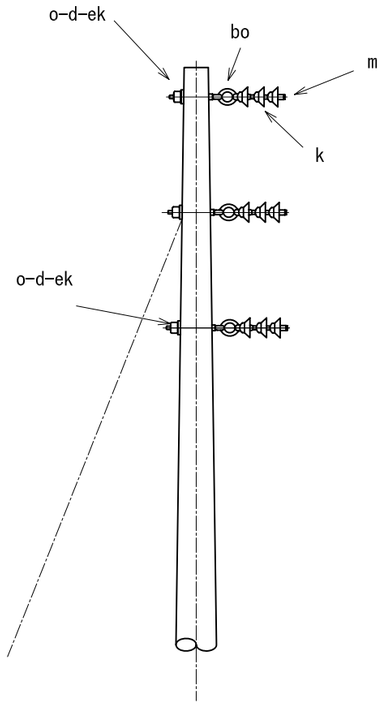

ELEVATION

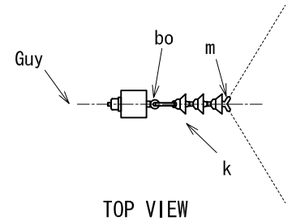

TOP VIEW

Item	Materials
d-	Hole washer
k-	Suspension insulator
o-	Eye bolt
m-	Suspension clamp
bo-	Anchor shackle
ek-	locknuts

REPUBLIC OF ANGOLA MINISTRY OF ENERGY AND WATER	JICA NEWJEC	JAPAN INTERNATIONAL COOPERATION AGENCY NEWJEC Inc.	Project & Location THE PREPARATORY SURVEY ON RURAL ELECTRIFICATION DEVELOPMENT IN THE REPUBLIC OF ANGLA	Drawing Title **SAMPLE POLE DRAWING FOR DISTRIBUTION LINE ROUTE CUTATO TO ANDULO**	DWG No. T-004 7.Apr.2011

POLE TR & CUT OUT SW INSTALLATION VIEW (100kVA) FOR MUENGA

30kV. THREE PHASE

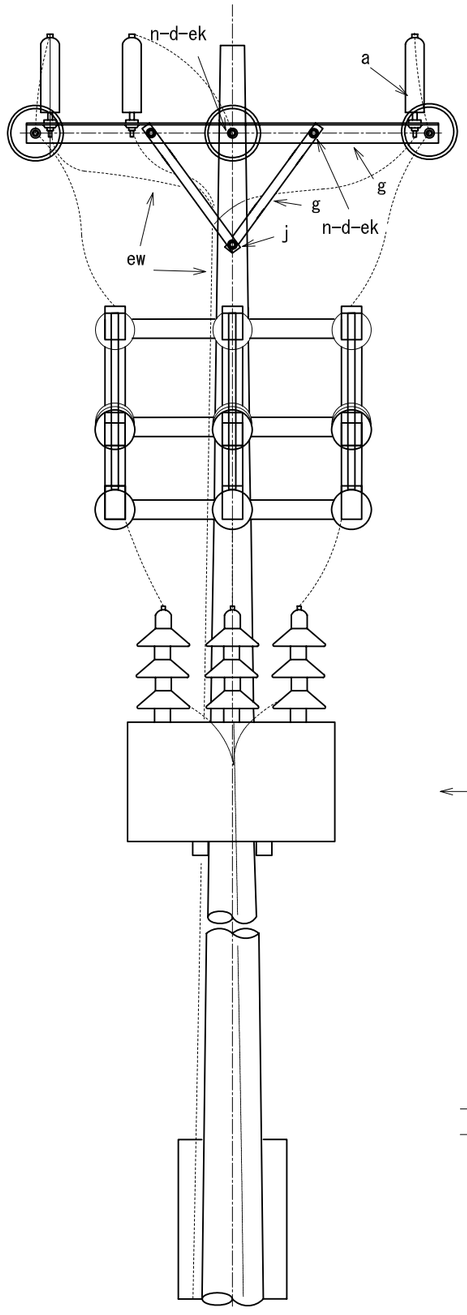

FRONT VIEW

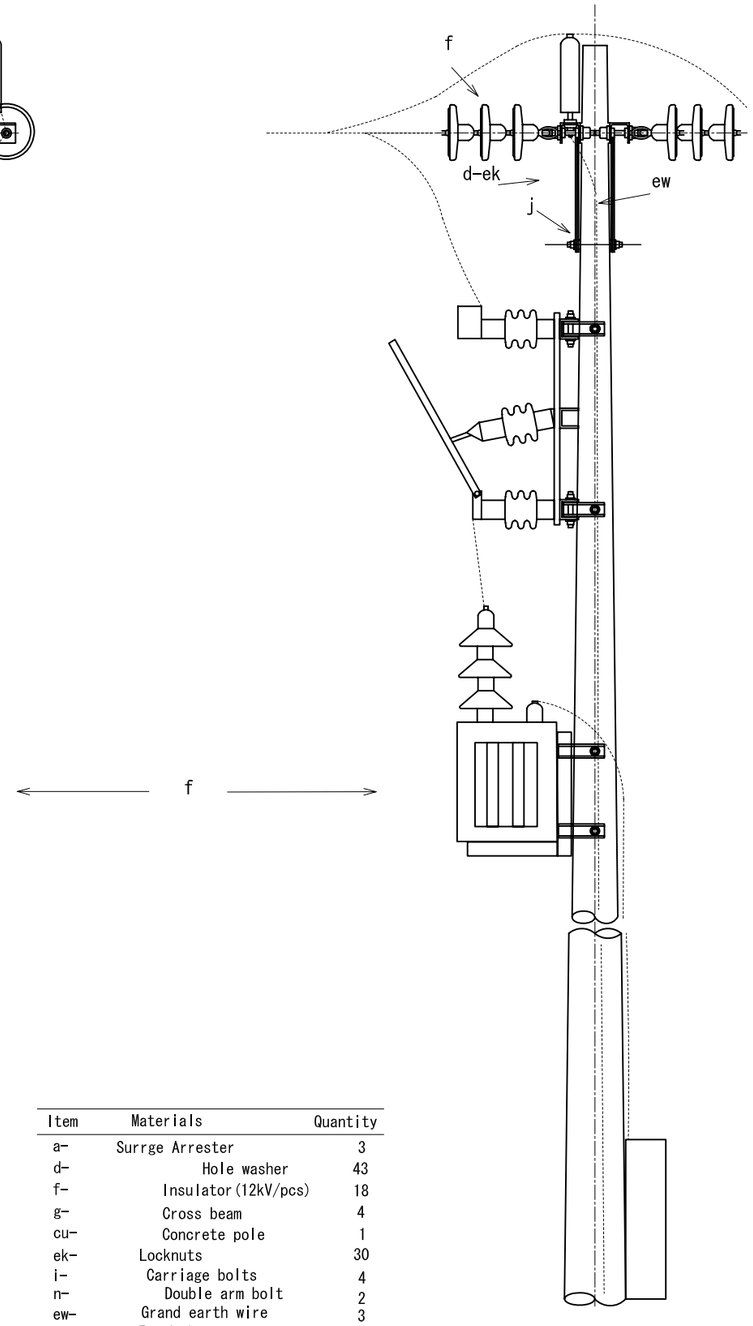

SIDE VIEW

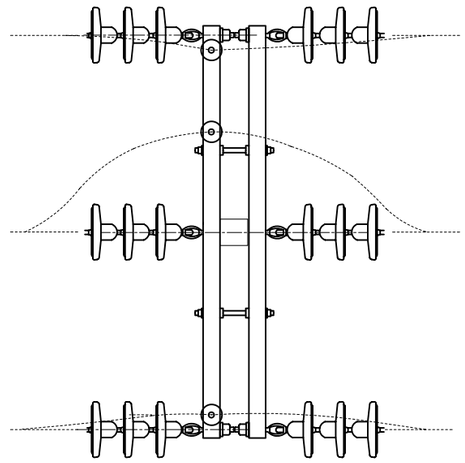

TOP VIEW

Item	Materials	Quantity
a-	Surrge Arrester	3
d-	Hole washer	43
f-	Insulator(12kV/pcs)	18
g-	Cross beam	4
cu-	Concrete pole	1
ek-	Locknuts	30
i-	Carriage bolts	4
n-	Double arm bolt	2
ew-	Grand earth wire	3
o-	Eye bolt	6
s-	Single arm bolt	10
tr-	Transformer	1

REPUBLIC OF ANGOLA MINISTRY OF ENERGY AND WATER	JICA NEWJEC	JAPAN INTERNATIONAL COOPERATION AGENCY NEWJEC Inc.	Project & Location THE PREPARATORY SURVEY ON RURAL ELECTRIFICATION DEVELOPMENT IN THE REPUBLIC OF ANGLA	Drawing Title **POLE DRAWING FOR DISTRIBUTION LINE ROUTE CUTATO TO ANDULO**	DWG No. T-005 7.Apr.2011

POLE TR & CUT OUT SW INSTALLATION VIEW (250kVA) FOR CHICUMBI

30kV. THREE PHASE,

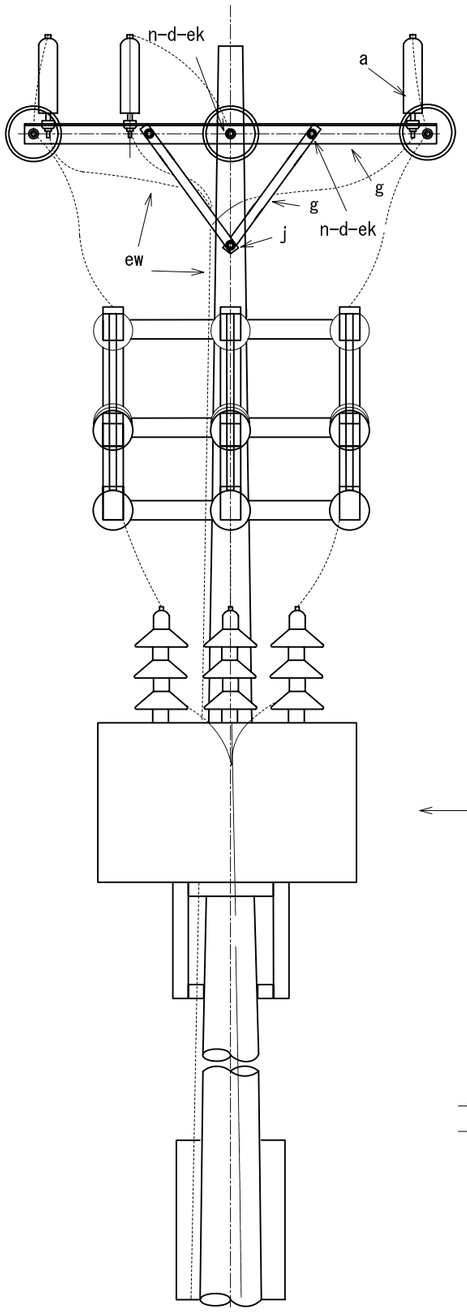

FRONT VIEW

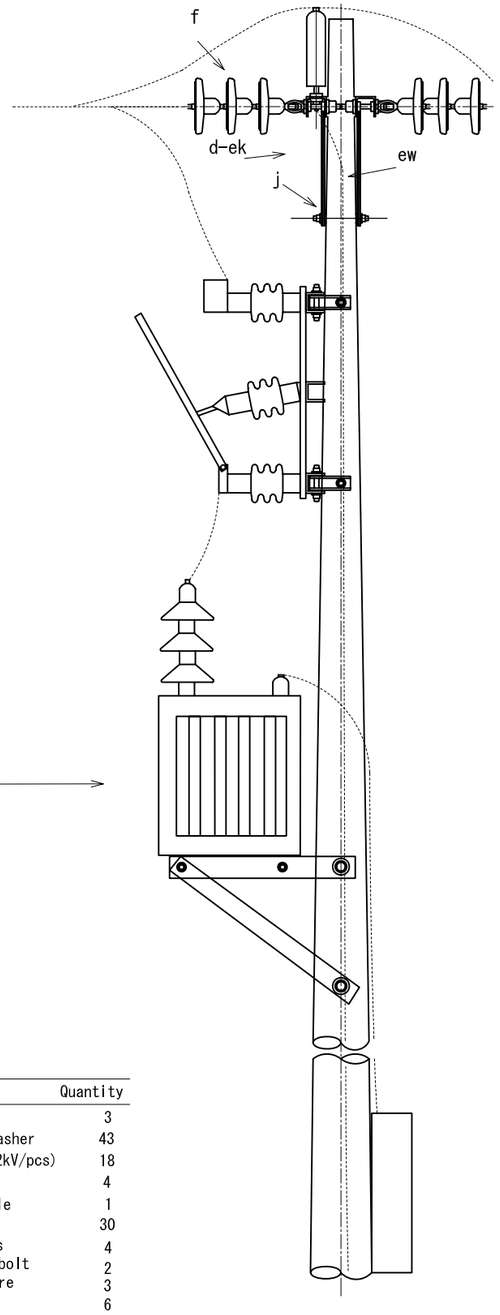

SIDE VIEW

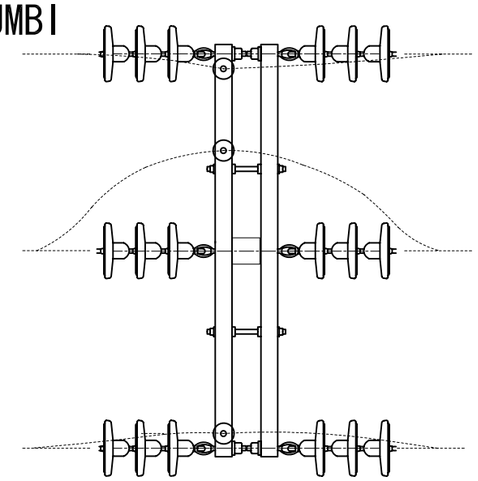

TOP VIEW

Item	Materials	Quantity
a-	Surrge Arrester	3
d-	Hole washer	43
f-	Insulator(12kV/pcs)	18
g-	Cross beam	4
cu-	Concrete pole	1
ek-	Locknuts	30
i-	Carriage bolts	4
n-	Double arm bolt	2
ew-	Grand earth wire	3
o-	Eye bolt	6
s-	Single arm bolt	10
tr-	Transformer	1

REPUBLIC OF ANGOLA MINISTRY OF ENERGY AND WATER	JICA NEWJEC	JAPAN INTERNATIONAL COOPERATION AGENCY NEWJEC Inc.	Project & Location THE PREPARATORY SURVEY ON RURAL ELECTRIFICATION DEVELOPMENT IN THE REPUBLIC OF ANGLA	Drawing Title **SAMPLE POLE DRAWING FOR DISTRIBUTION LINE ROUTE CUTATO TO ANDULO**	DWG No. T-006 7.Apr.2011

END POLE

30kV. THREE PHASE 0° TO 5° ANGLE

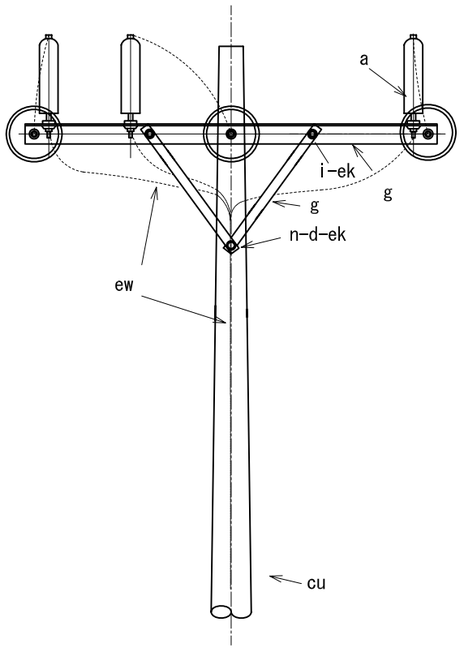

FRONT VIEW

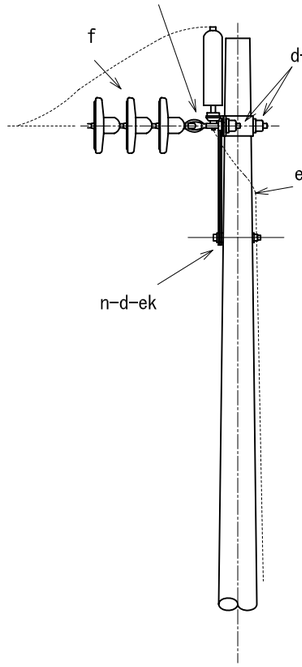

SIDE VIEW

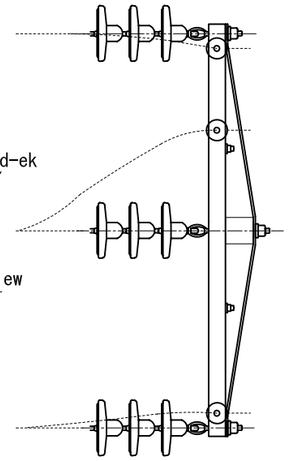

TOP VIEW

Item	Materials	Quantity
a-	Surrge Arrester	3
d-	Hole washer	16
f-	Insulator(12kV/pcs)	9
g-	Cross beam	2
cu-	Concrete pole	1
ek-	Locknuts	9
i-	Carriage bolts	2
n-	Double arm bolt	0
ew-	Grand earth wire	3
o-	Eye bolt	3
s-	Single arm bolt	1

REPUBLIC OF ANGOLA MINISTRY OF ENERGY AND WATER	JICA NEWJEC	JAPAN INTERNATIONAL COOPERATION AGENCY NEWJEC Inc.	Project & Location THE PREPARATORY SURVEY ON RURAL ELECTRIFICATION DEVELOPMENT IN THE REPUBLIC OF ANGLA	Drawing Title **POLE DRAWING FOR DISTRIBUTION LINE ROUTE CUTATO TO ANDULO**	DWG No. T-007 7.Apr.2011