Appendix 6 - Drawings

List of Drawings

Drawing Number	Contents	Nos.
CS-01,07,14,21,27,34, 41,47,54,61,67,74,81, 87,94,101,107,114,119	Road Cross Section※ STA. 42+000 to STA 59+000 and STA 59+875	19
BR1-01	Bridge No.1 (Repair)	1
BR2-01～14	Bridge No.2 (Steel Bridge)	14
BR3-01～04	Bridge No.3 (RC Rigid Frame Bridge)	4
BR4-01～04	Bridge No.4 (RC Rigid Frame Bridge)	4
BR5-01～04	Bridge No.5 (RC Rigid Frame Bridge)	4
	Total	46 Nos.

※120 Nos. of cross section drawings are made with 25m intervals. 19 Nos. of drawings (one drawing per one kilo meter) are extracted and attached.

STA. 42+050
FH=398.554

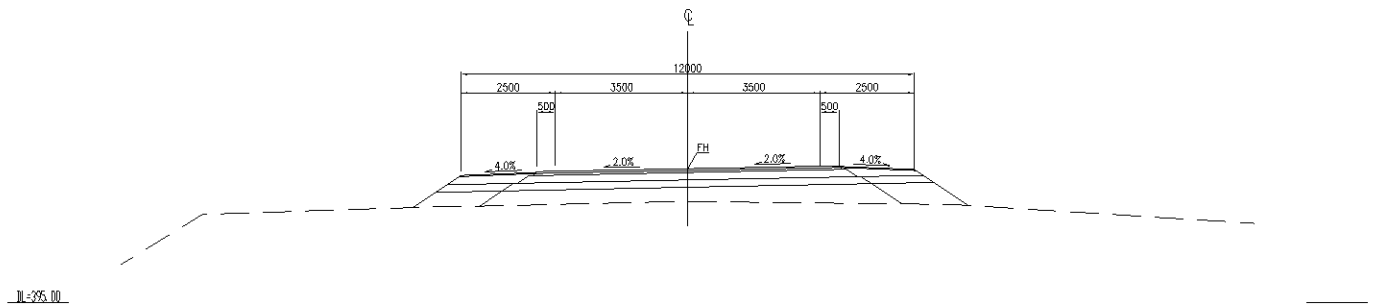

STA. 42+125
FH=398.371

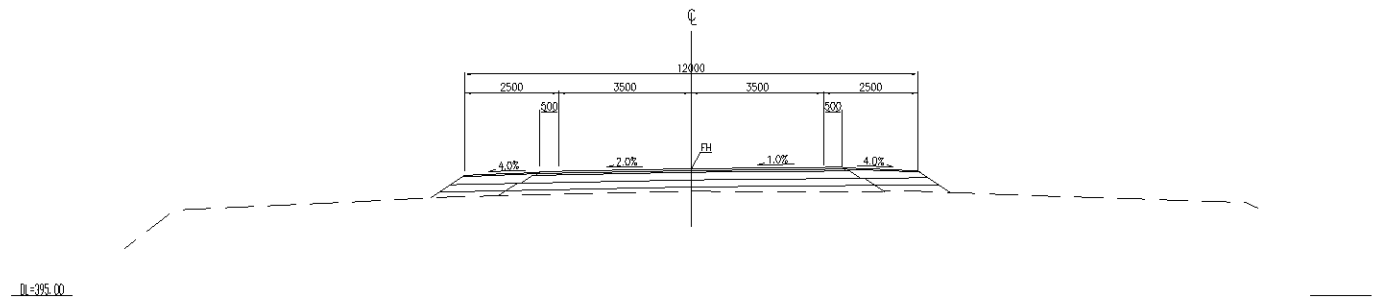

STA. 42+025
FH=398.596

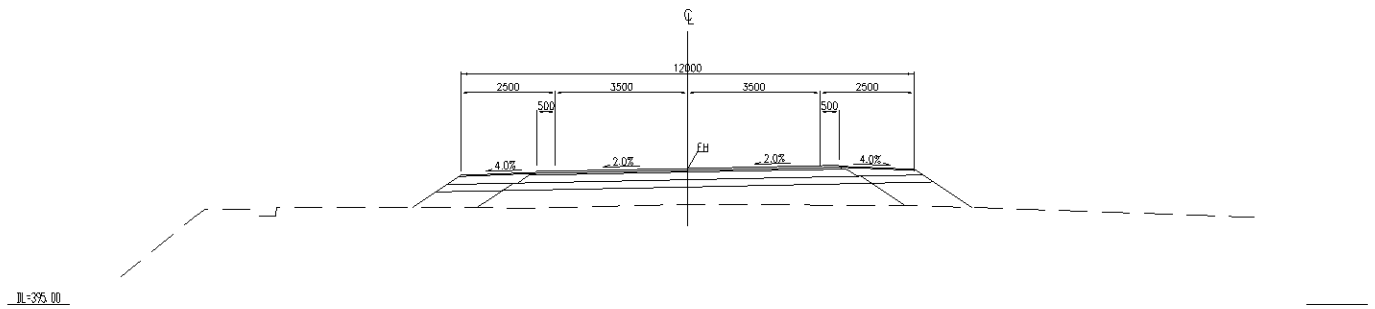

STA. 42+100
FH=398.441

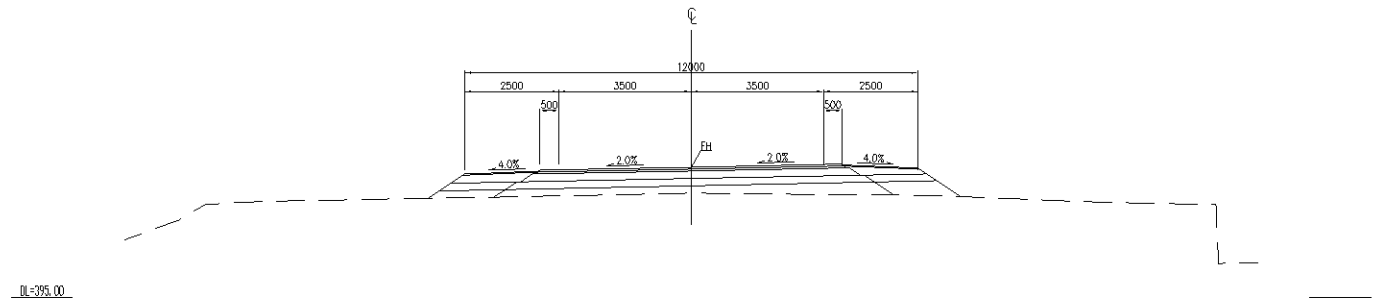

STA. 42+000
FH=398.629

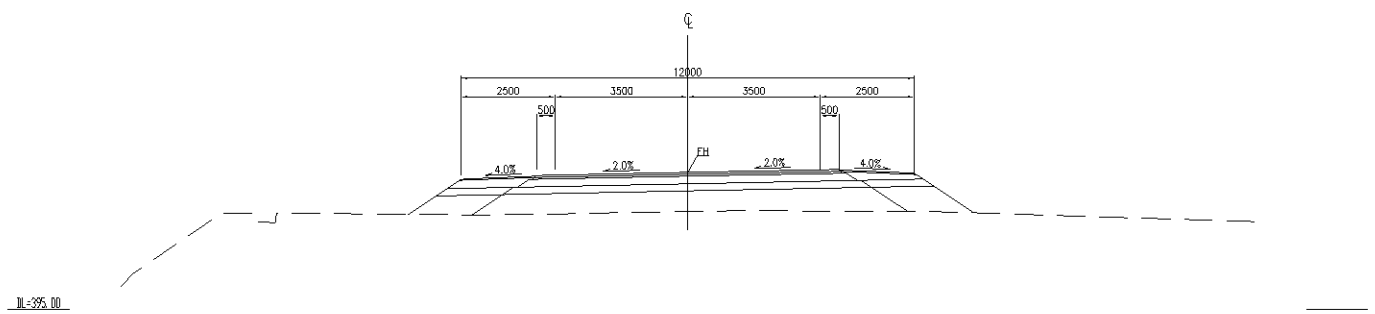

STA. 42+075
FH=398.502

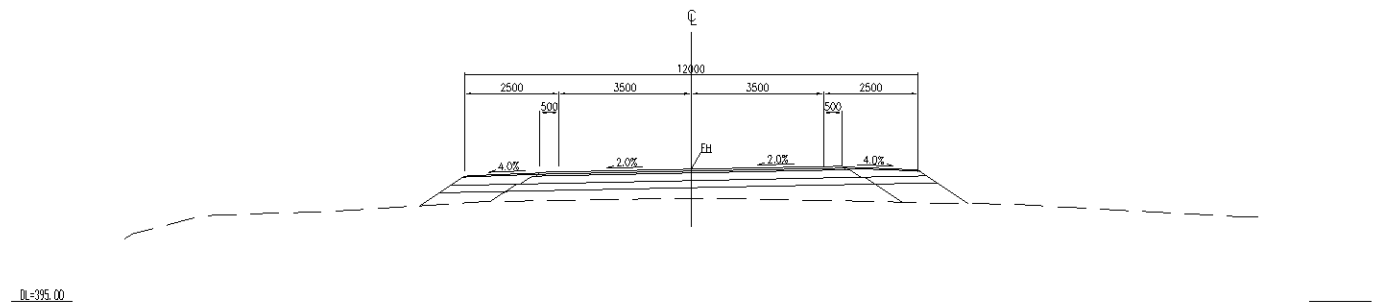

A6-2

KATAHIRA & ENGINEERS INTERNATIONAL Designed by : Date : Checked by : Date :	MINISTRY OF TRANSPORT OF THE REPUBLIC OF TAJIKISTAN Approved by : Date :	THE PROJECT FOR REHABILITATION OF KURGAN TYUBE - DUSTI ROAD (PHASE-2)	TITLE : CROSS SECTION (1) 42+000~42+125	SCALE : 1/200	DRAWING No: CS-01 Rv.

STA. 42+950
FH=399.096

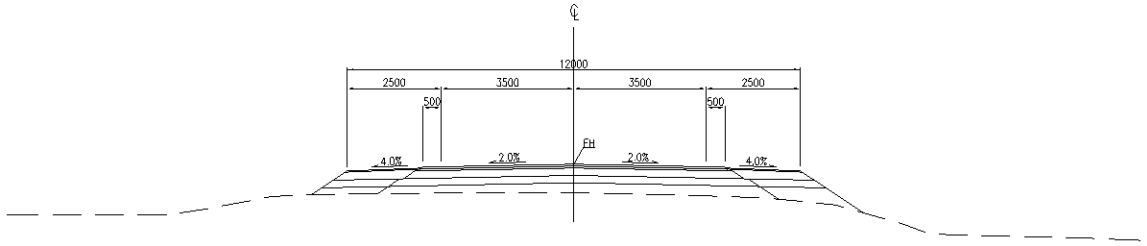

DL=395.00

STA. 43+025
FH=398.843

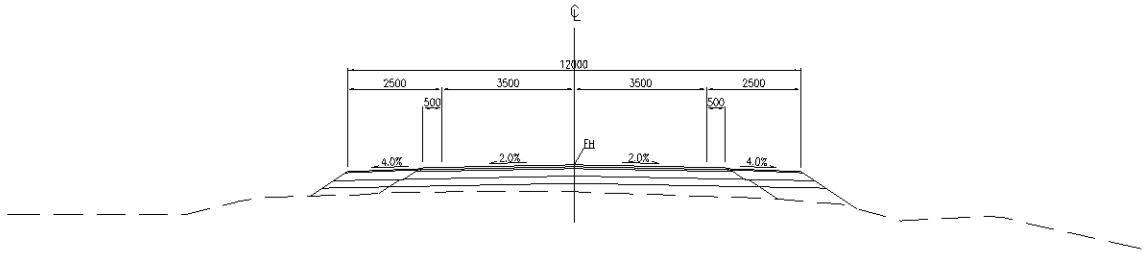

DL=395.00

STA. 42+925
FH=399.171

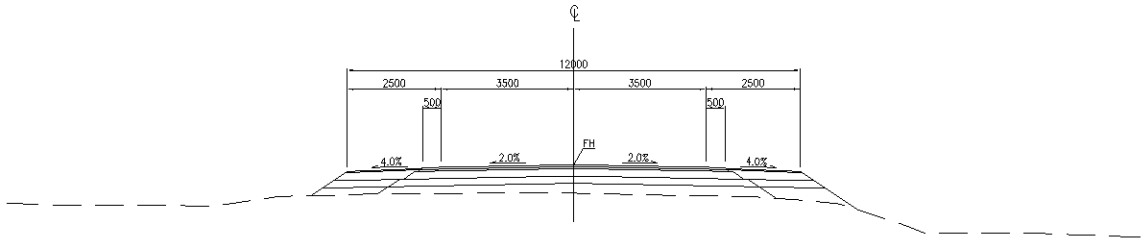

DL=395.00

STA. 43+000
FH=398.934

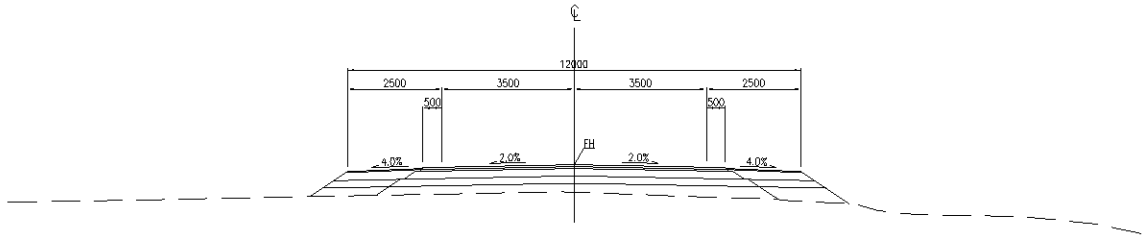

DL=395.00

STA. 42+900
FH=399.237

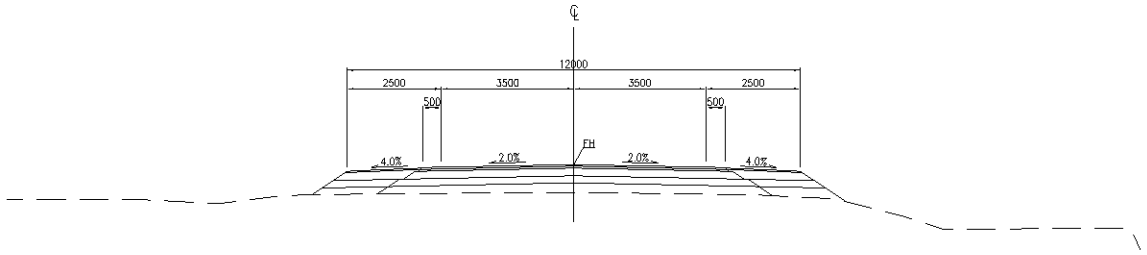

DL=395.00

STA. 42+975
FH=399.018

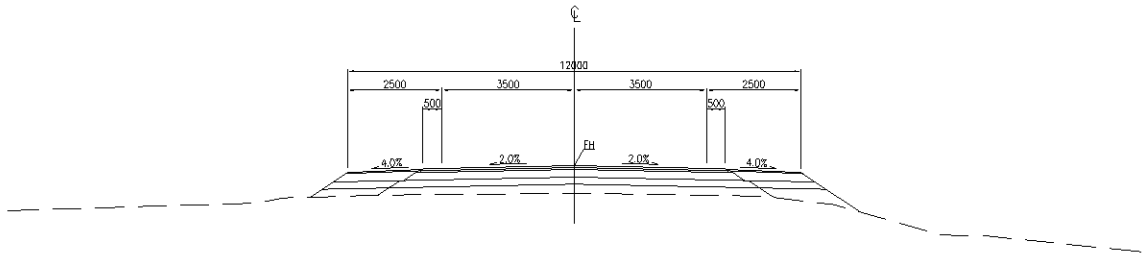

DL=395.00

A6-3

KATAHIRA & ENGINEERS INTERNATIONAL Designed by : Date : Checked by : Date :	MINISTRY OF TRANSPORT OF THE REPUBLIC OF TAJIKISTAN Approved by : Date :	THE PROJECT FOR REHABILITATION OF KURGAN TYUBE - DUSTI ROAD (PHASE-2)	TITLE : CROSS SECTION (7) 42+900~43+025	SCALE : 1/200	DRAWING No: CS-07 Rv.

STA. 44+000
FH=405. 346

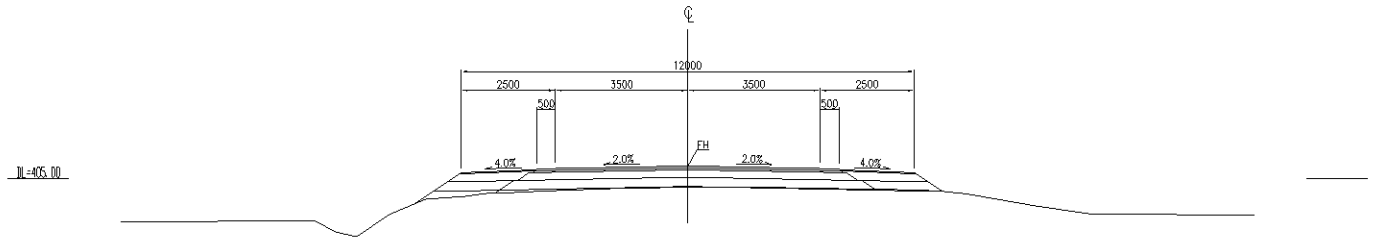

STA. 44+075
FH=406. 021

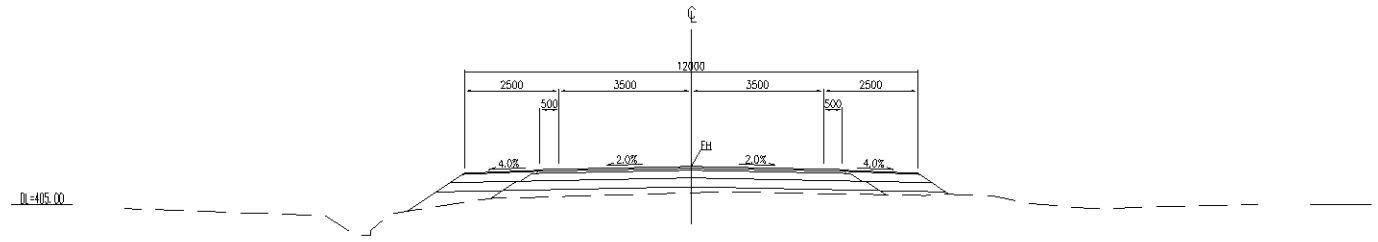

STA. 43+975
FH=405. 134

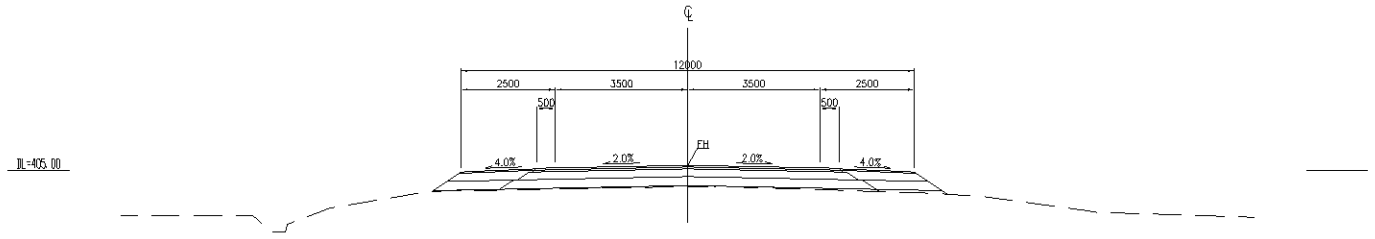

STA. 44+050
FH=405. 796

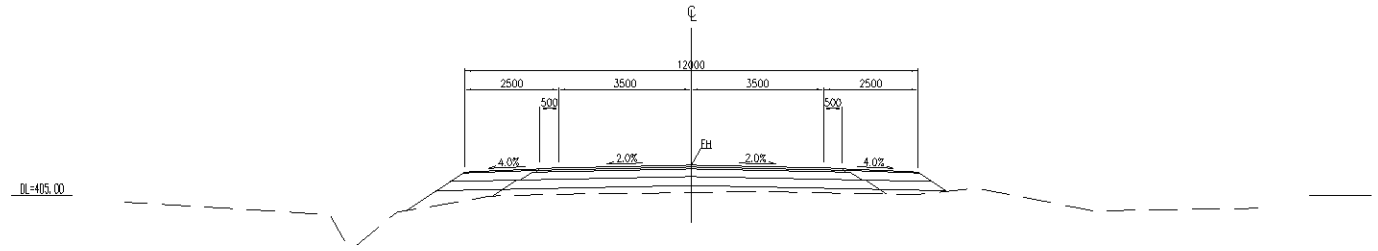

STA. 43+950
FH=404. 946

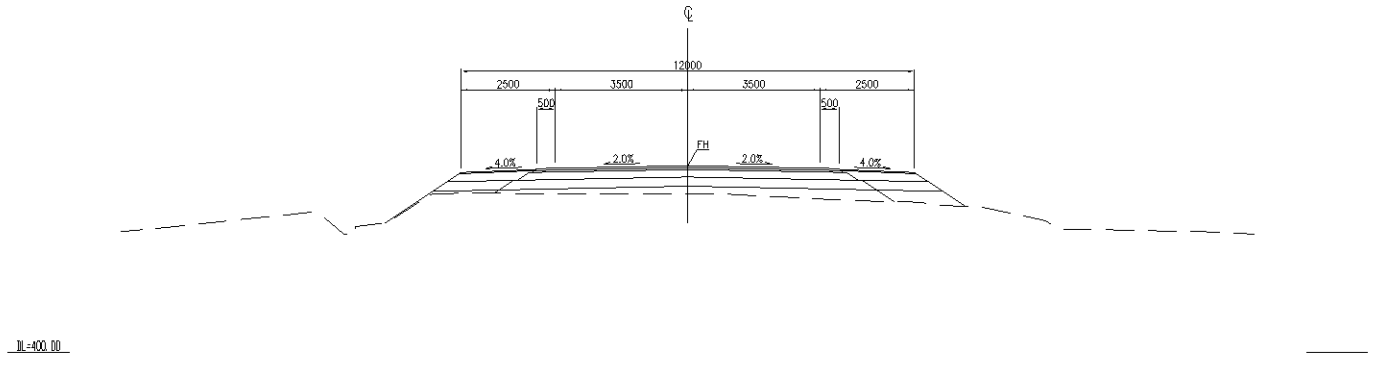

STA. 44+025
FH=405. 571

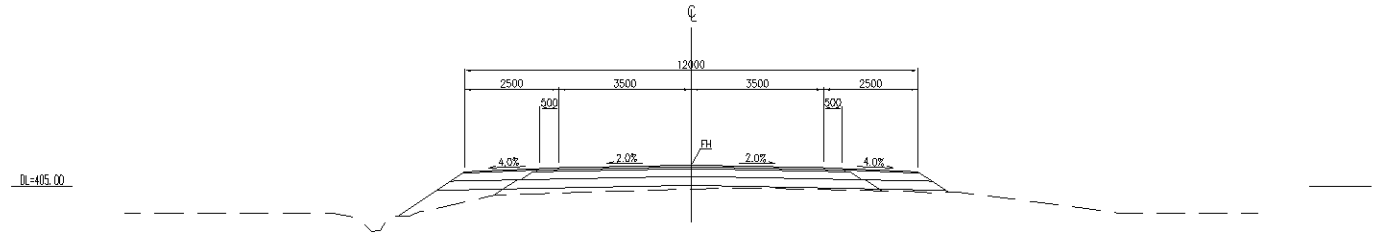

KATAHIRA & ENGINEERS INTERNATIONAL Designed by : Date : Checked by : Date :	MINISTRY OF TRANSPORT OF THE REPUBLIC OF TAJIKISTAN Approved by : Date :	THE PROJECT FOR REHABILITATION OF KURGAN TYUBE - DUSTI ROAD (PHASE-2)	TITLE : CROSS SECTION (14) 43+950~44+075	SCALE : 1/200	DRAWING No: CS-14

STA. 45+050
FH=401.565

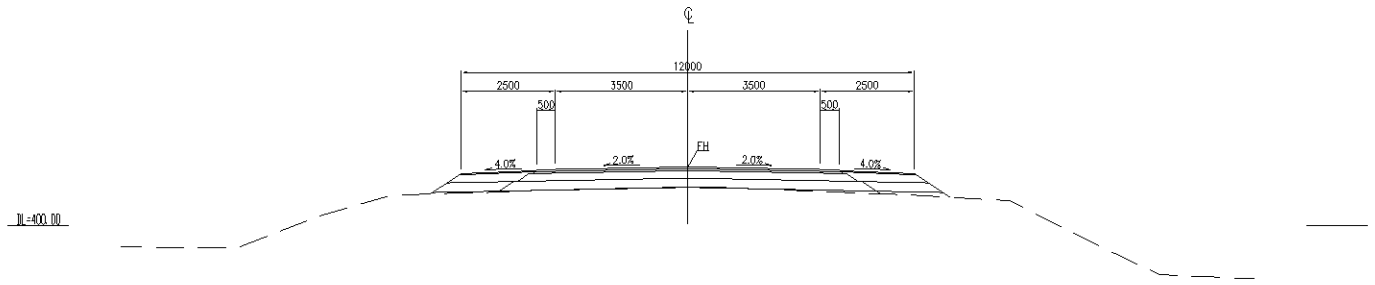

STA. 45+125
FH=400.018

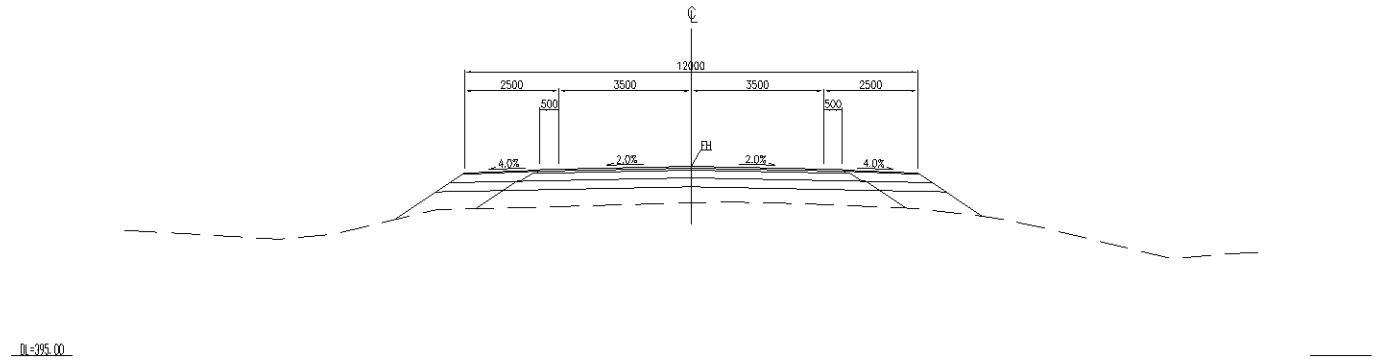

STA. 45+025
FH=402.218

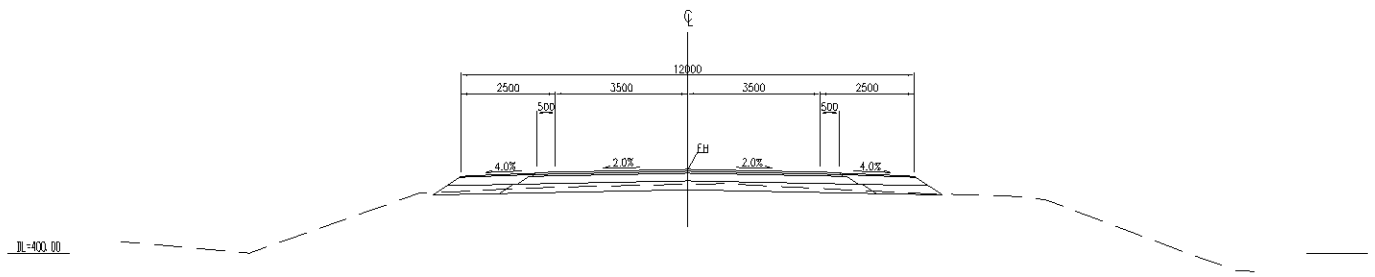

STA. 45+100
FH=400.465

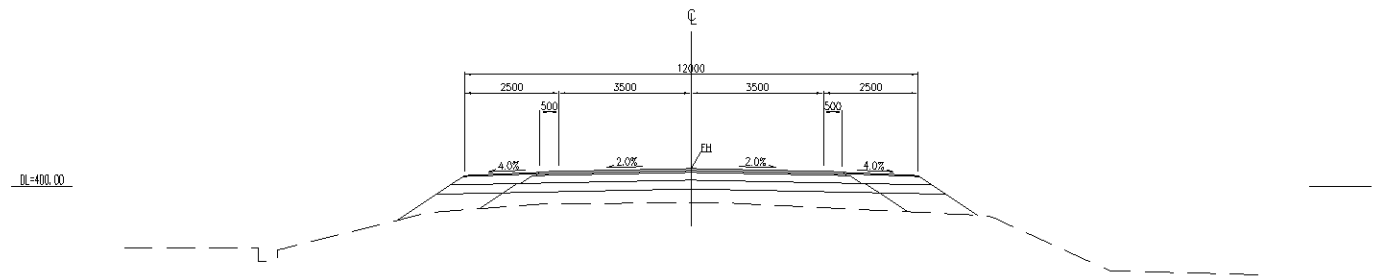

STA. 45+000
FH=402.906

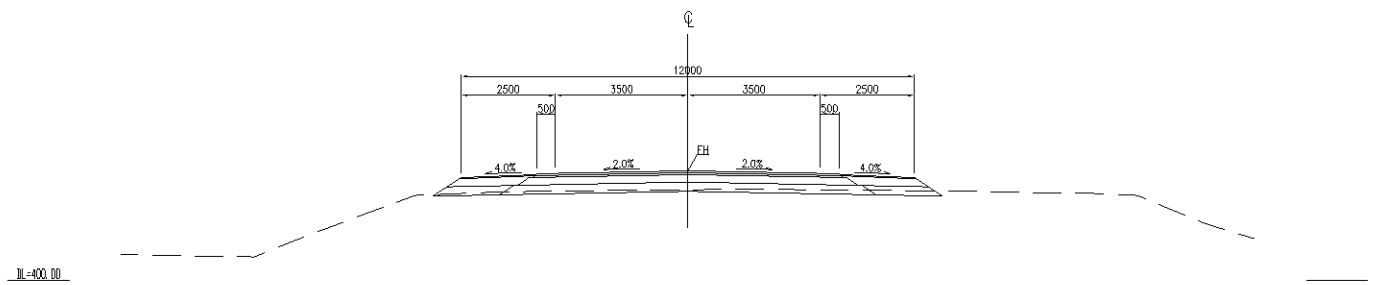

STA. 45+075
FH=400.981

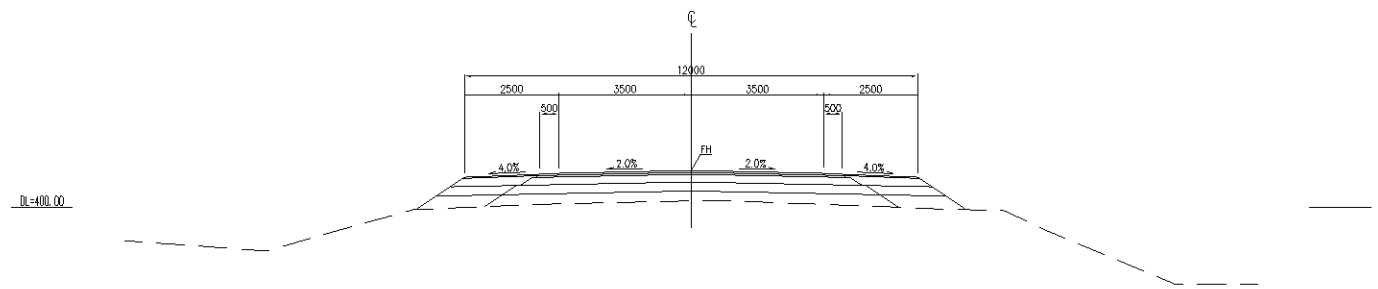

A6-5

KATAHIRA & ENGINEERS INTERNATIONAL Designed by : Date : Checked by : Date :	MINISTRY OF TRANSPORT OF THE REPUBLIC OF TAJIKISTAN Approved by : Date :	THE PROJECT FOR REHABILITATION OF KURGAN TYUBE - DUSTI ROAD (PHASE-2)	TITLE : CROSS SECTION (21) 45+000~45+125	SCALE : 1/200	DRAWING No: CS-21

STA. 45+950
FH=393.218

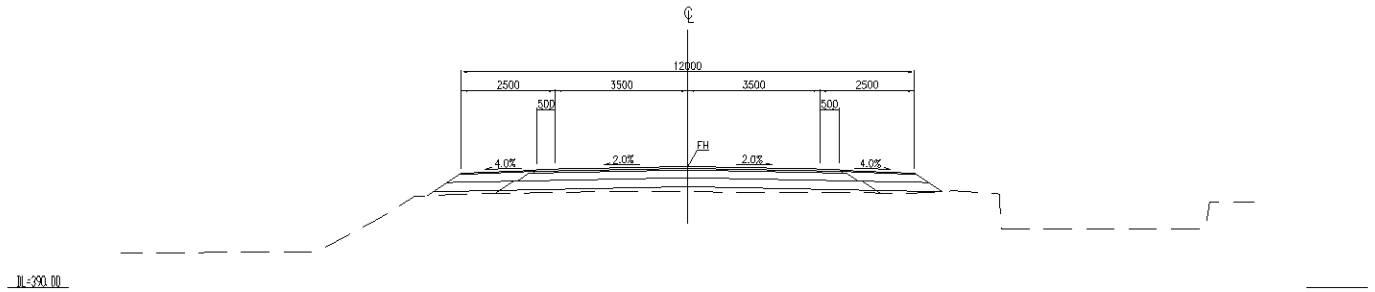

STA. 46+025
FH=392.993

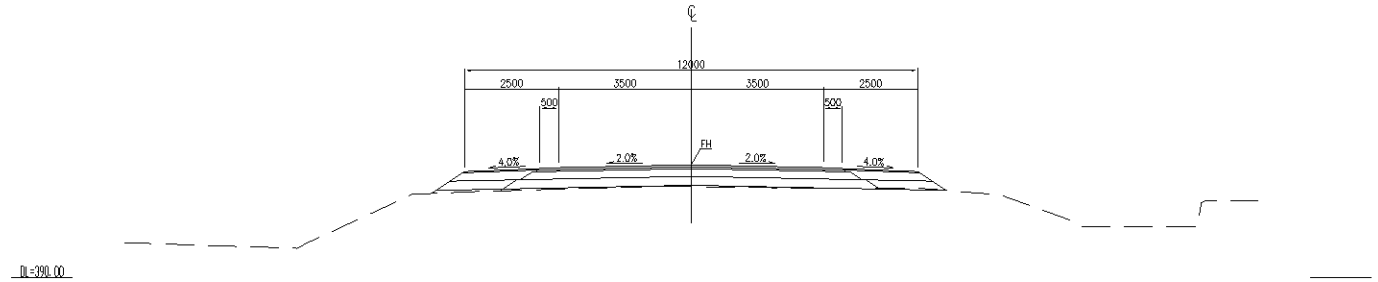

STA. 45+925
FH=393.293

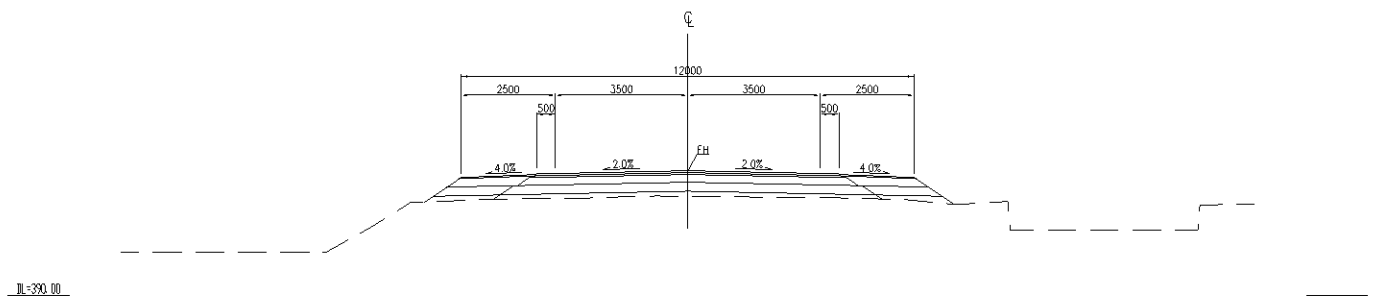

STA. 46+000
FH=393.068

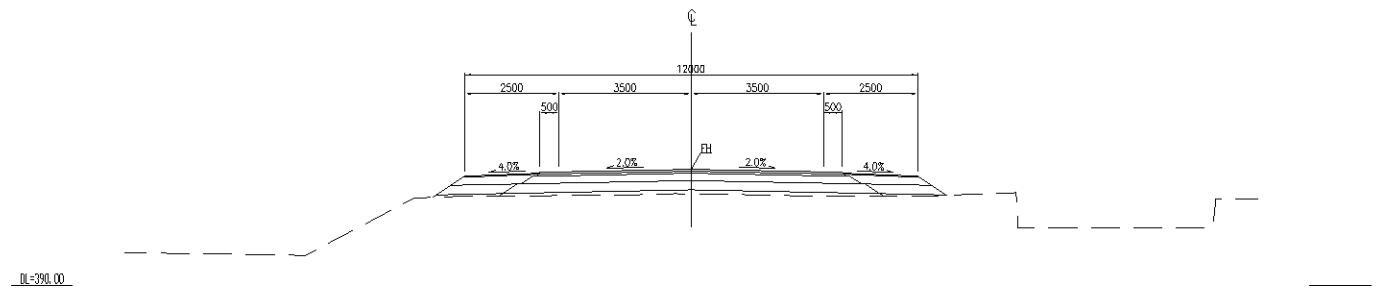

STA. 45+900
FH=393.368

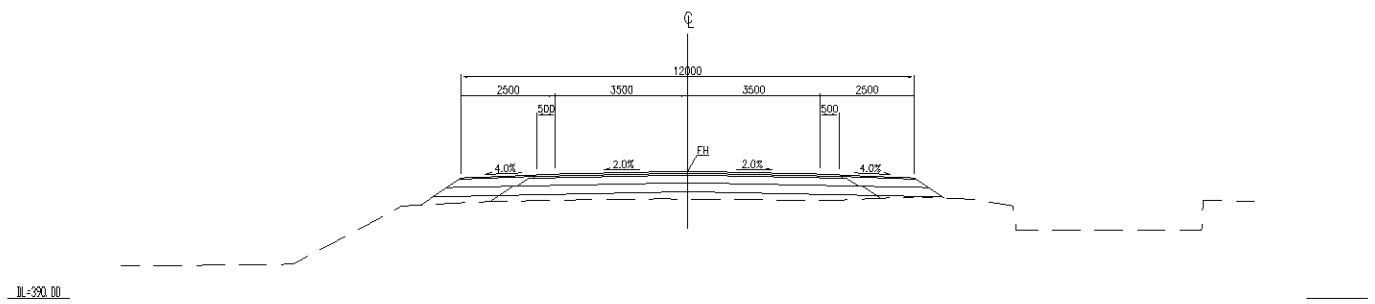

STA. 45+975
FH=393.143

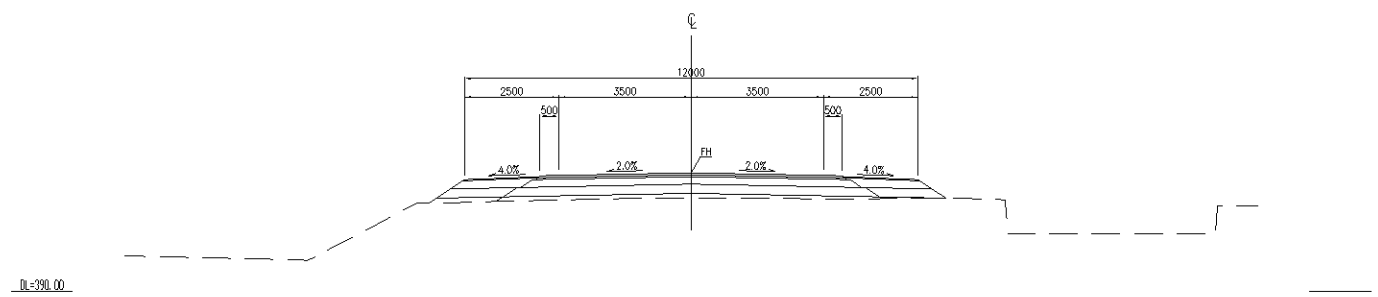

A6-6

KATAHIRA & ENGINEERS INTERNATIONAL Designed by : Date : Checked by : Date :	MINISTRY OF TRANSPORT OF THE REPUBLIC OF TAJIKISTAN Approved by : Date :	THE PROJECT FOR REHABILITATION OF KURGAN TYUBE - DUSTI ROAD (PHASE-2)	TITLE : CROSS SECTION (27) 45+900~46+025	SCALE : 1/200	DRAWING No: CS-27	Rv.

STA. 47+000
FH=392.271

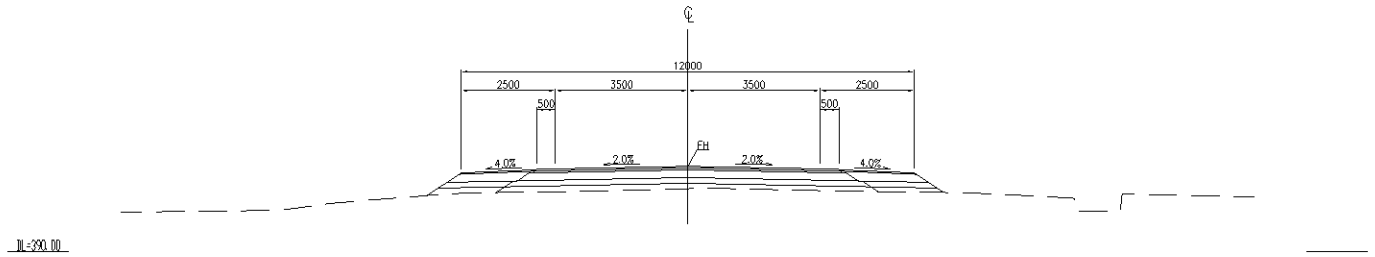

STA. 47+075
FH=392.521

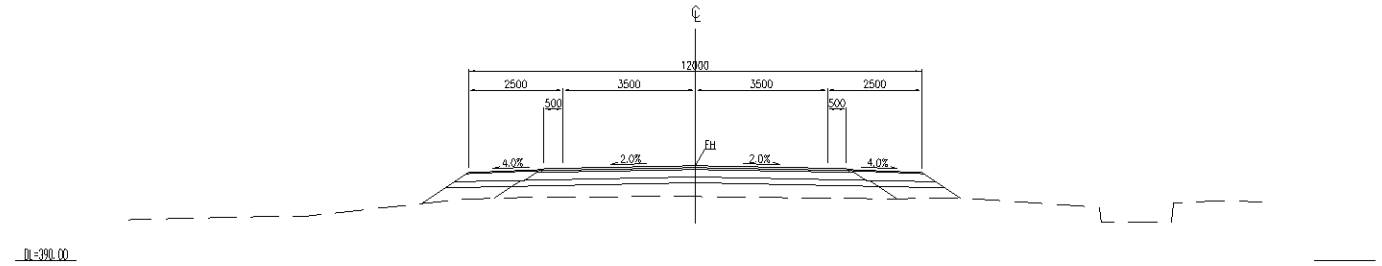

STA. 46+975
FH=392.271

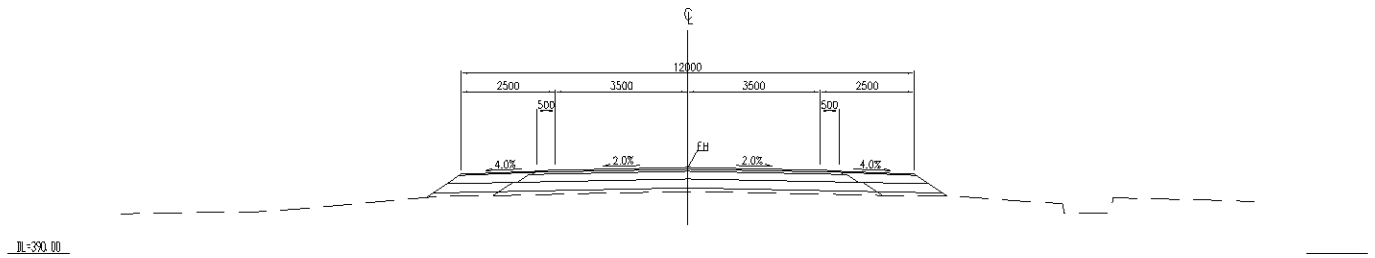

STA. 47+050
FH=392.421

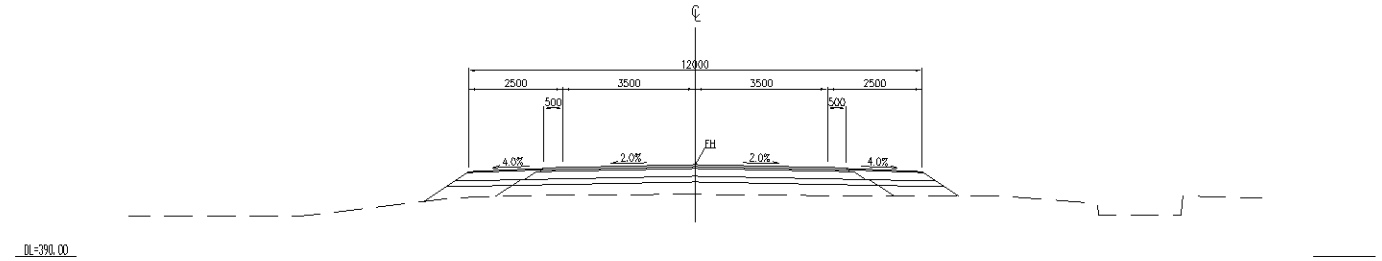

STA. 46+950
FH=392.321

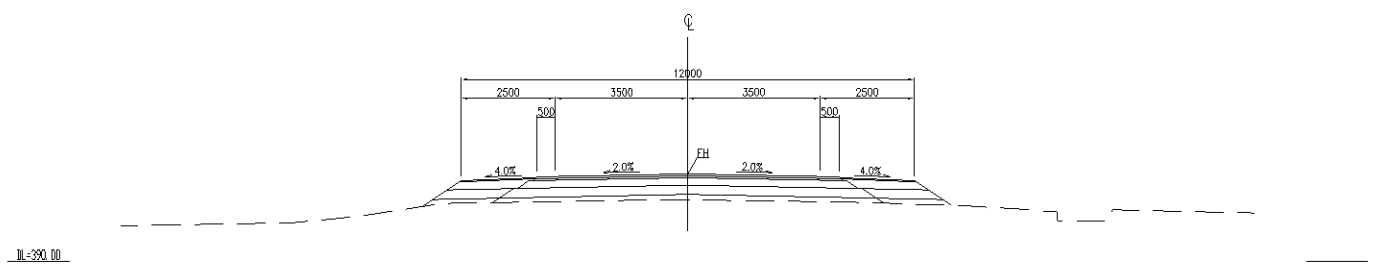

STA. 47+025
FH=392.321

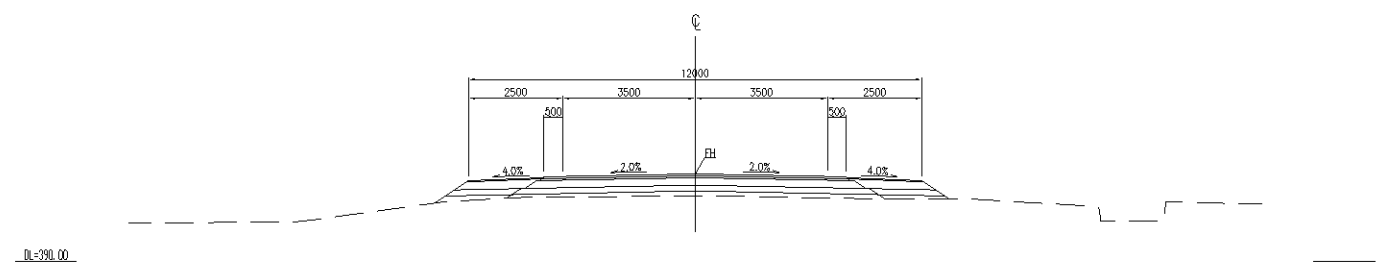

A6-7

KATAHIRA & ENGINEERS INTERNATIONAL Designed by : Date : Checked by : Date :	MINISTRY OF TRANSPORT OF THE REPUBLIC OF TAJIKISTAN Approved by : Date :	THE PROJECT FOR REHABILITATION OF KURGAN TYUBE - DUSTI ROAD (PHASE-2)	TITLE : CROSS SECTION (34) 46+950~47+075	SCALE : 1/200	DRAWING No: CS-34

STA. 48+050
FH=394.321

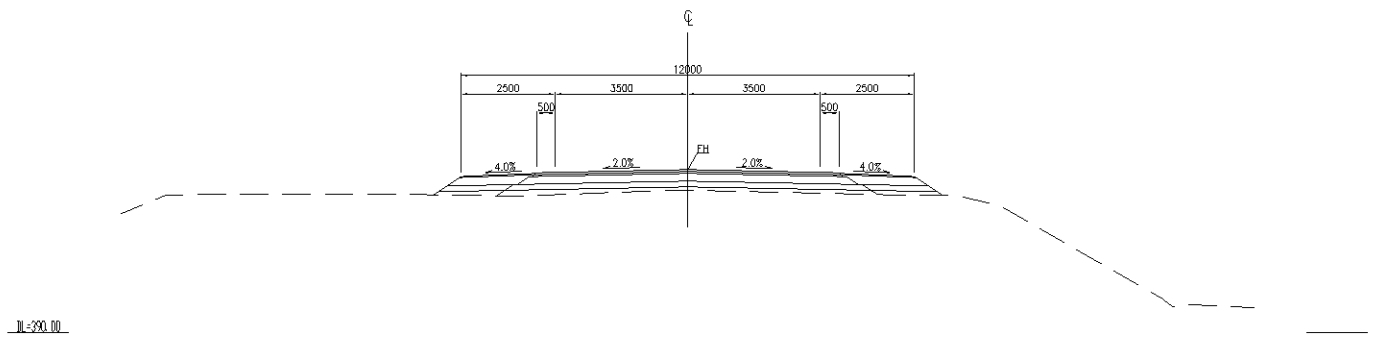

STA. 48+125
FH=394.546

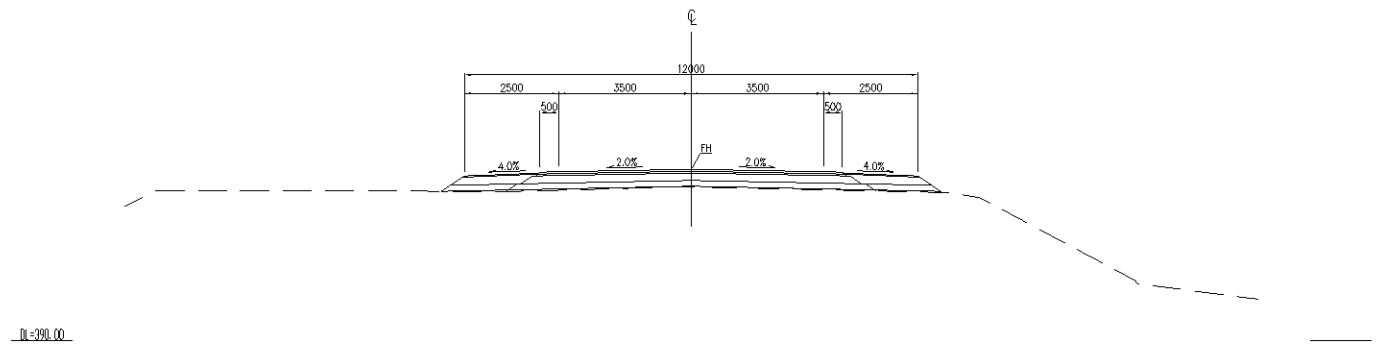

STA. 48+025
FH=394.246

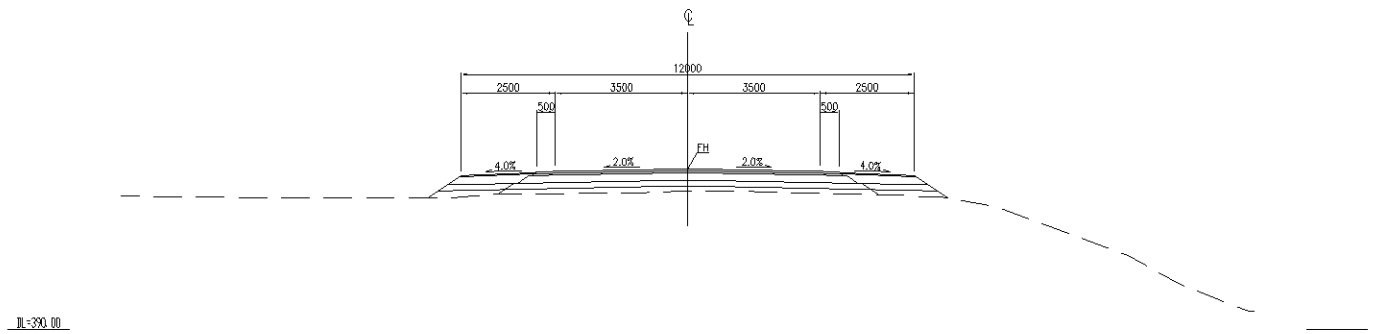

STA. 48+100
FH=394.471

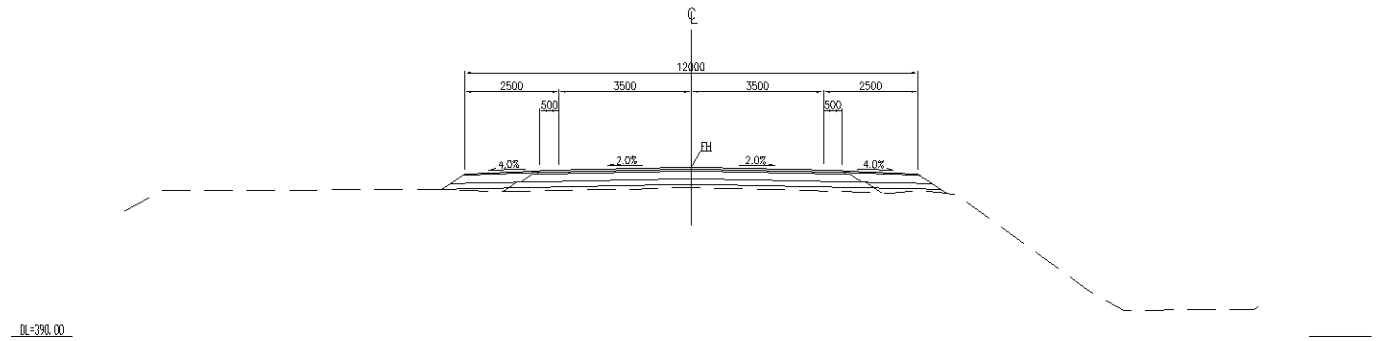

STA. 48+000
FH=394.171

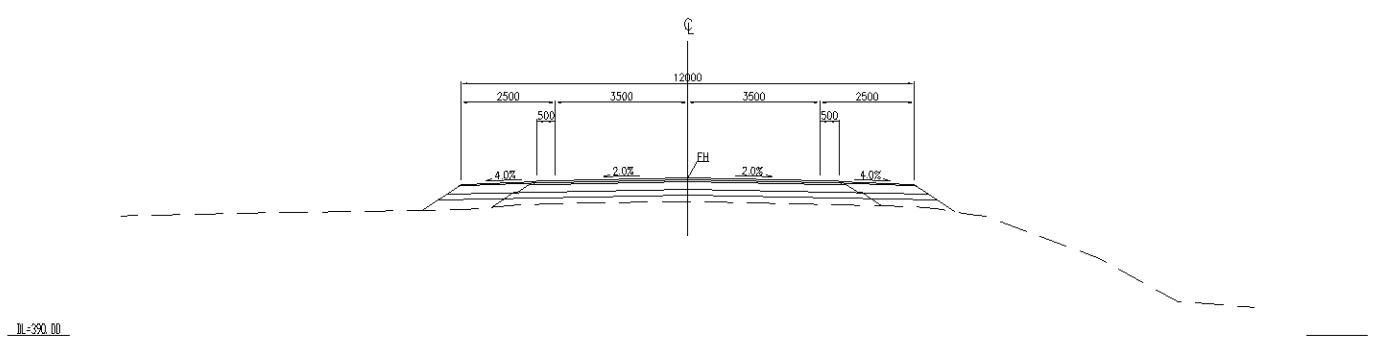

STA. 48+075
FH=394.396

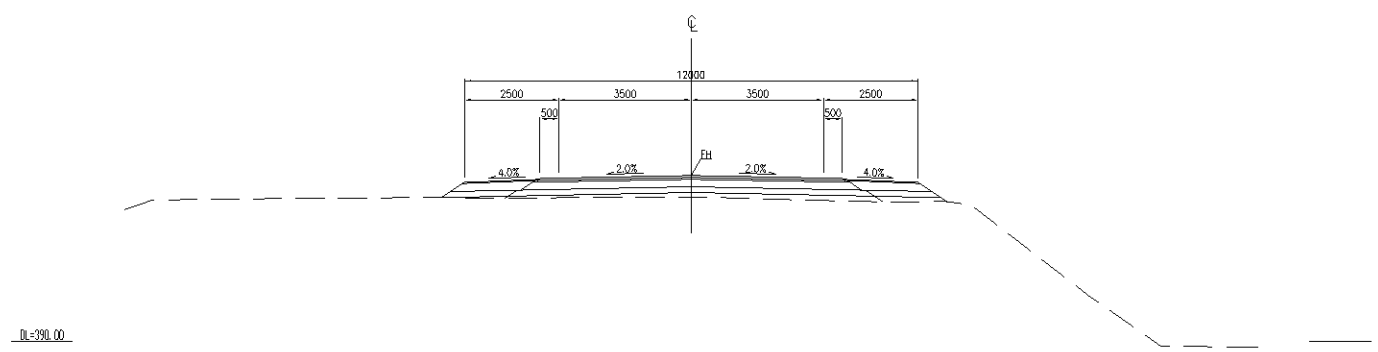

KATAHIRA & ENGINEERS INTERNATIONAL Designed by : Date : Checked by : Date :	MINISTRY OF TRANSPORT OF THE REPUBLIC OF TAJIKISTAN Approved by : Date :	THE PROJECT FOR REHABILITATION OF KURGAN TYUBE - DUSTI ROAD (PHASE-2)	TITLE : CROSS SECTION (41) 48+000~48+125	SCALE : 1/200	DRAWING No: CS-41

STA. 48+950
FH=397.696

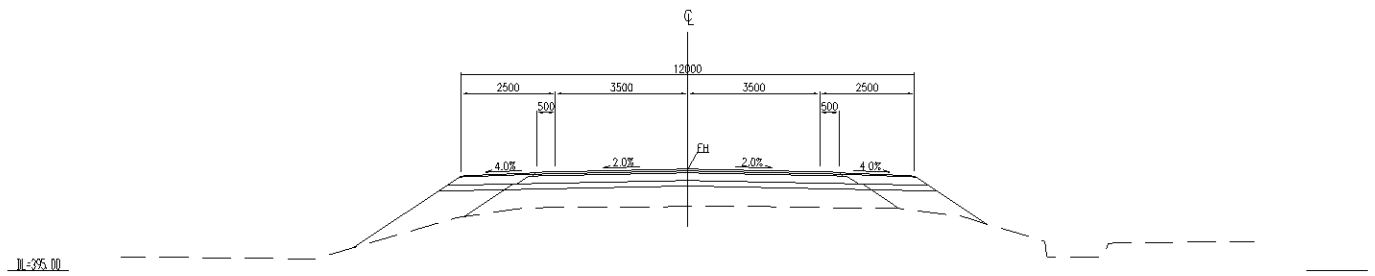

STA. 49+025
FH=397.921

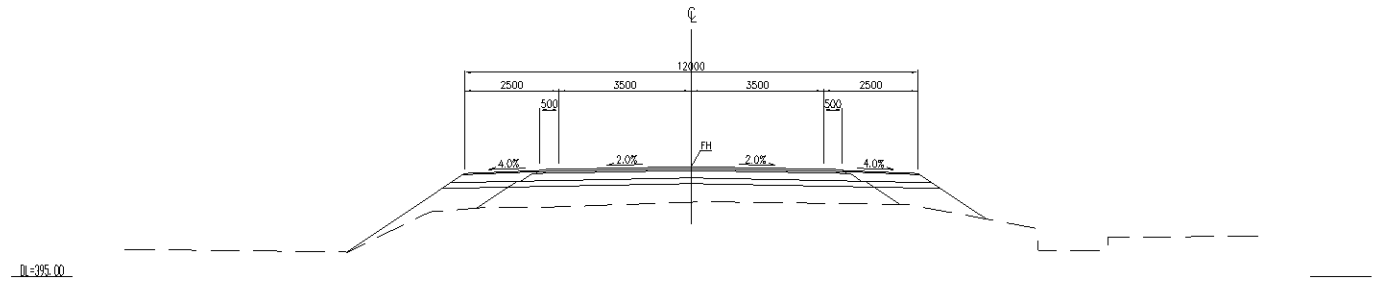

STA. 48+925
FH=397.621

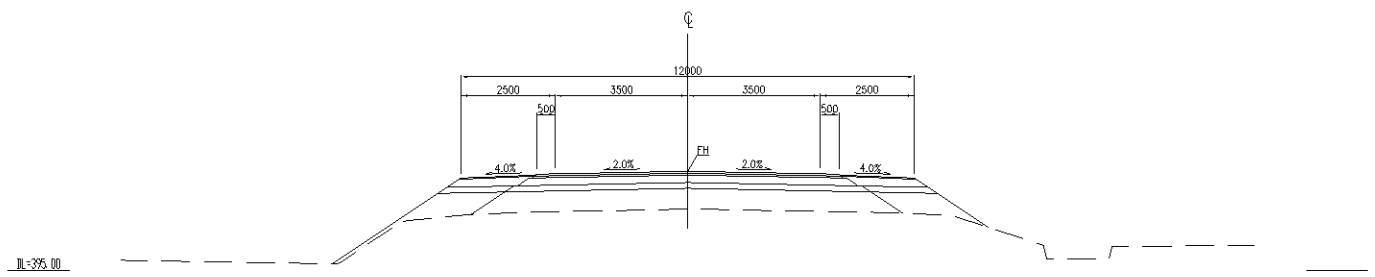

STA. 49+000
FH=397.846

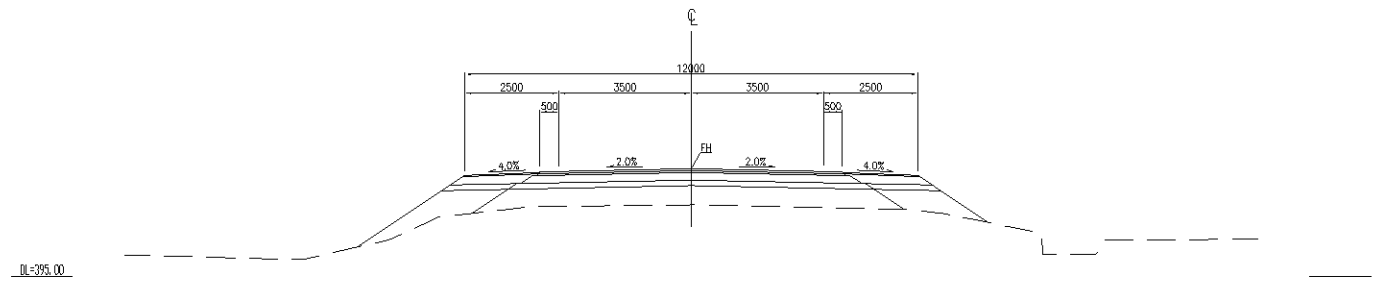

STA. 48+900
FH=397.546

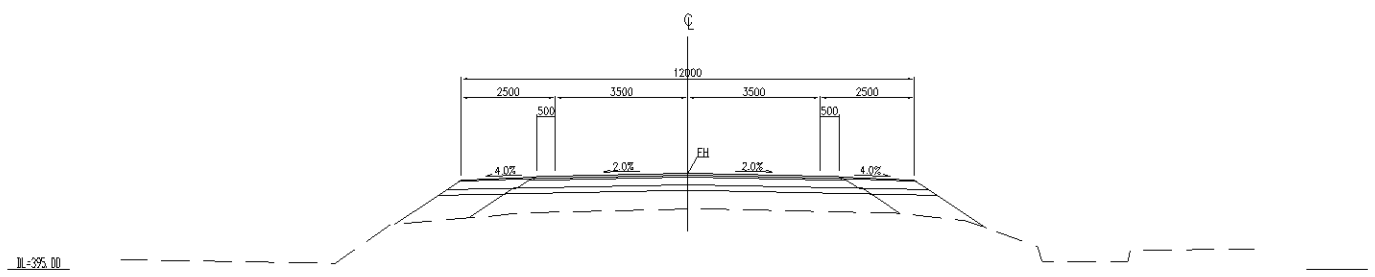

STA. 48+975
FH=397.771

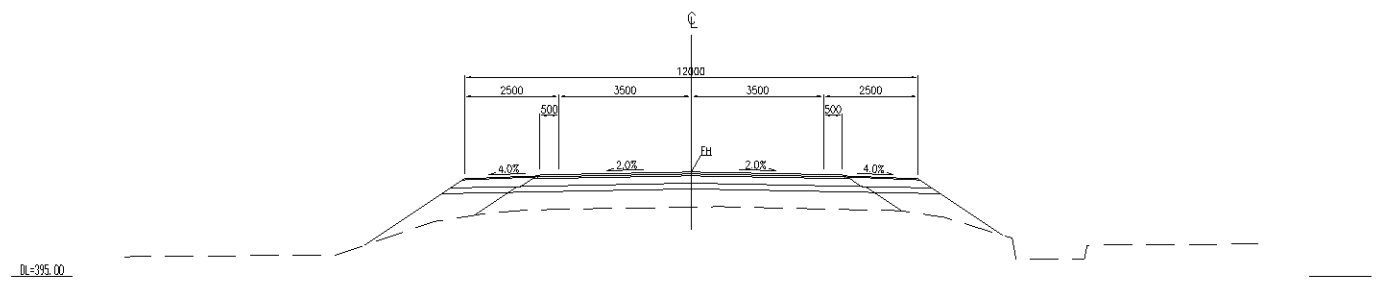

KATAHIRA & ENGINEERS INTERNATIONAL Designed by : Date : Checked by : Date :	MINISTRY OF TRANSPORT OF THE REPUBLIC OF TAJIKISTAN Approved by : Date :	THE PROJECT FOR REHABILITATION OF KURGAN TYUBE - DUSTI ROAD (PHASE-2)	TITLE : CROSS SECTION (47) 48+900~49+025	SCALE : 1/200	DRAWING No: CS-47

STA. 50+000
FH=403.396

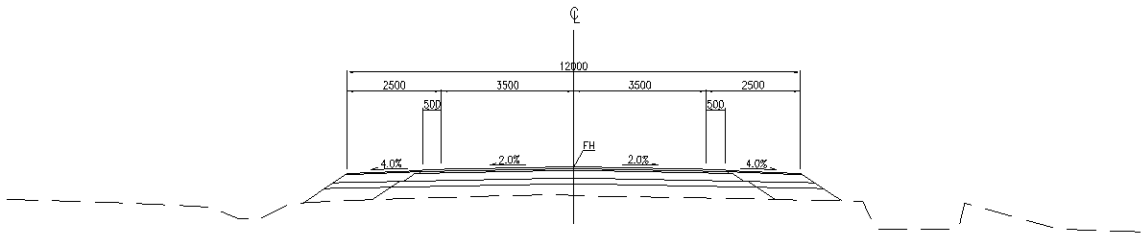

DL=400.00

STA. 50+075
FH=403.621

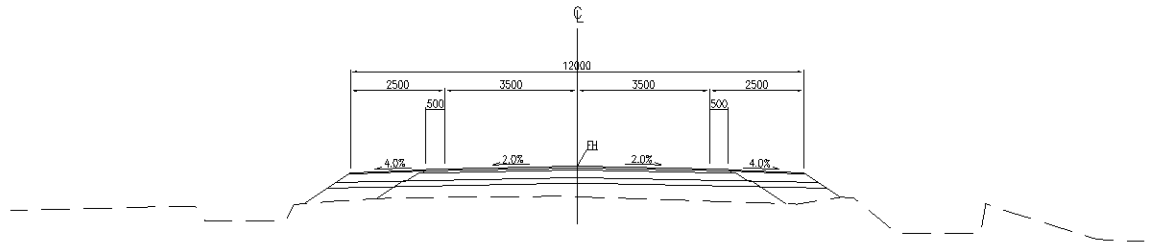

DL=400.00

STA. 49+975
FH=403.321

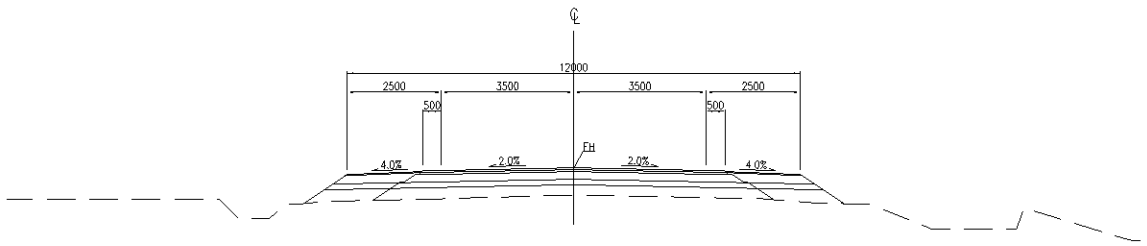

DL=400.00

STA. 50+050
FH=403.546

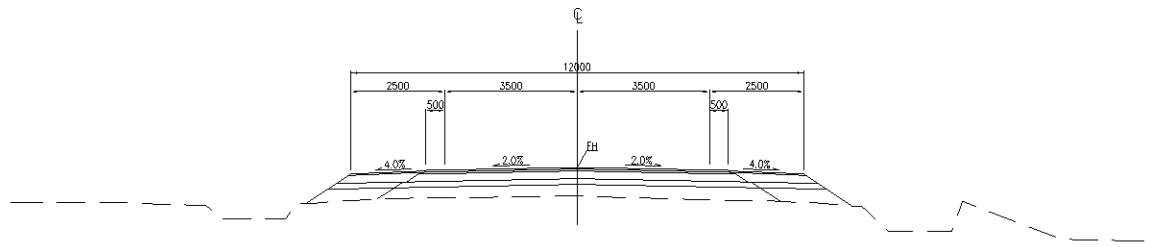

DL=400.00

STA. 49+950
FH=403.246

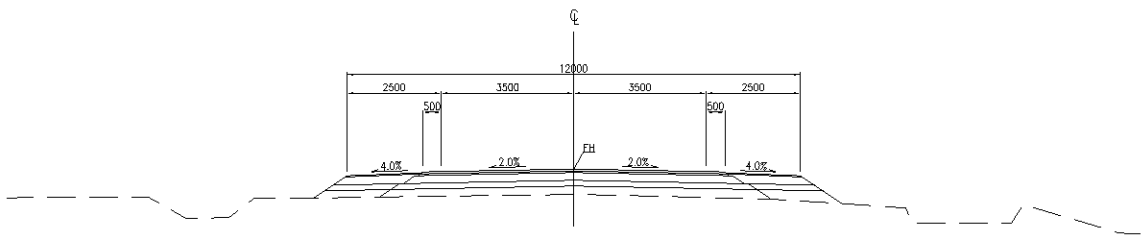

DL=400.00

STA. 50+025
FH=403.471

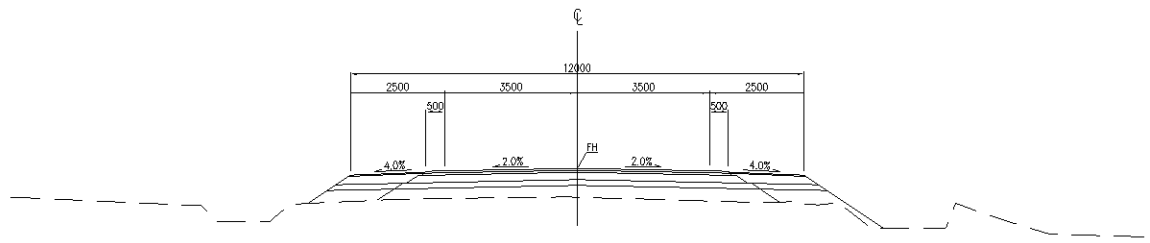

DL=400.00

A6-10

KATAHIRA & ENGINEERS INTERNATIONAL Designed by : Date : Checked by : Date :	MINISTRY OF TRANSPORT OF THE REPUBLIC OF TAJIKISTAN Approved by : Date :	THE PROJECT FOR REHABILITATION OF KURGAN TYUBE - DUSTI ROAD (PHASE-2)	TITLE : CROSS SECTION (54) 49+950~50+075	SCALE : 1/200	DRAWING No: CS-54

STA. 51+050
FH=404. 846

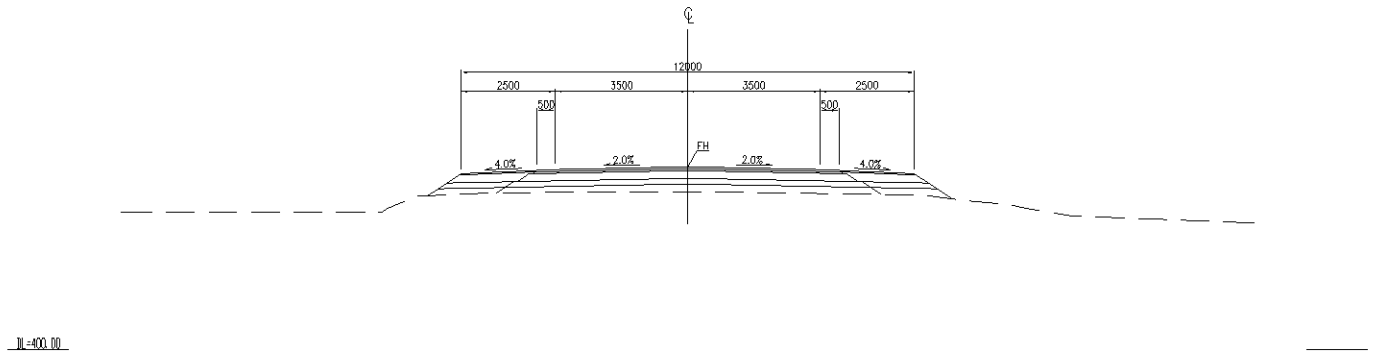

STA. 51+125
FH=405. 408

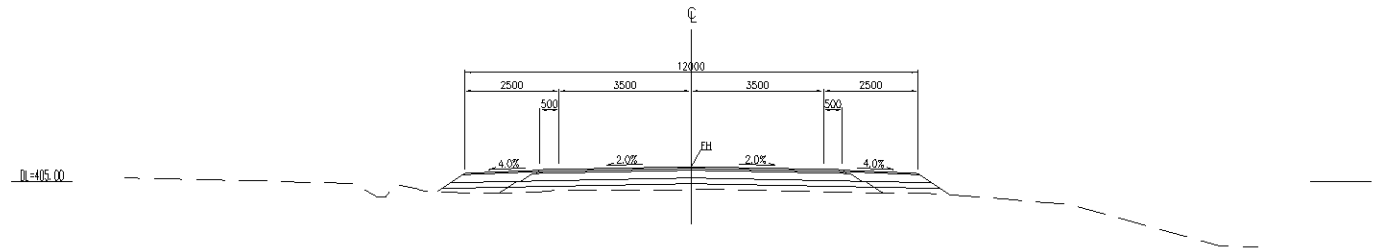

STA. 51+025
FH=404. 658

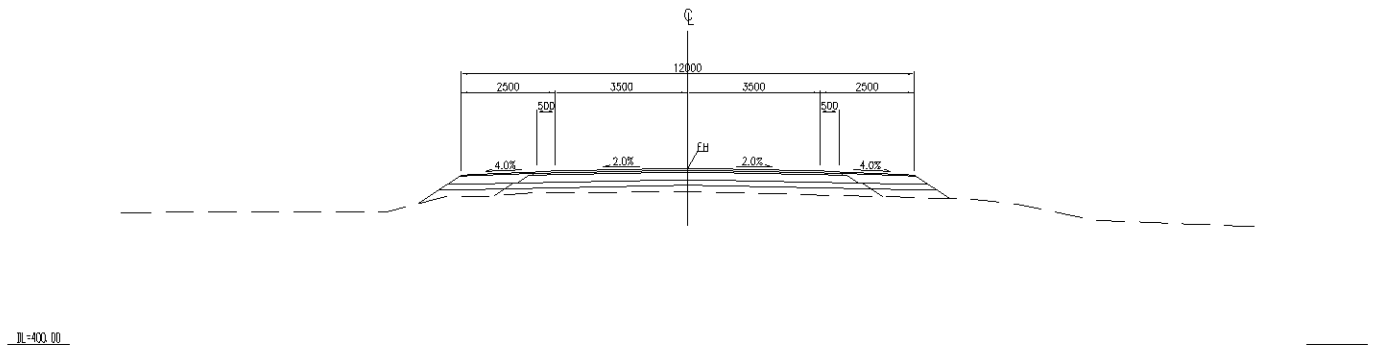

STA. 51+100
FH=405. 221

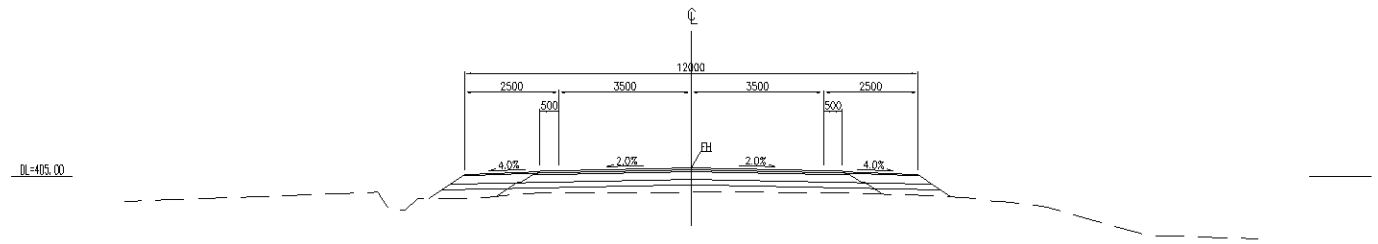

STA. 51+000
FH=404. 471

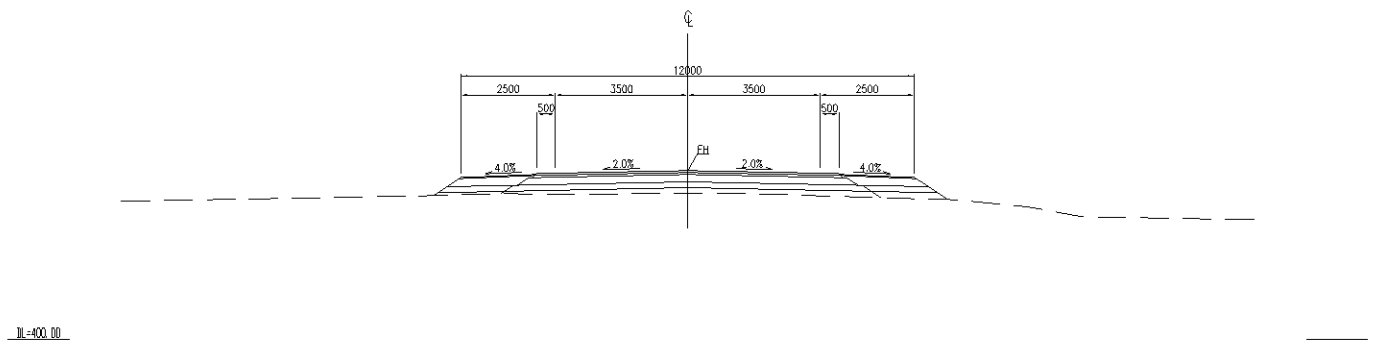

STA. 51+075
FH=405. 033

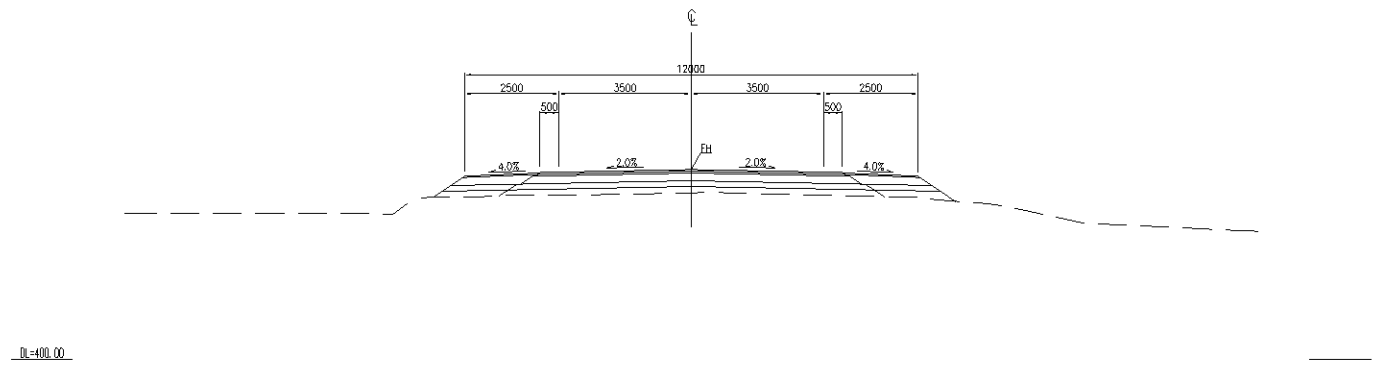

A6-11

KATAHIRA & ENGINEERS INTERNATIONAL Designed by : Date : Checked by : Date :	MINISTRY OF TRANSPORT OF THE REPUBLIC OF TAJIKISTAN Approved by : Date :	THE PROJECT FOR REHABILITATION OF KURGAN TYUBE - DUSTI ROAD (PHASE-2)	TITLE : CROSS SECTION (61) 51+000~51+125	SCALE : 1/200	DRAWING No: CS-61	Rv.

STA. 51+950
FH=405.508

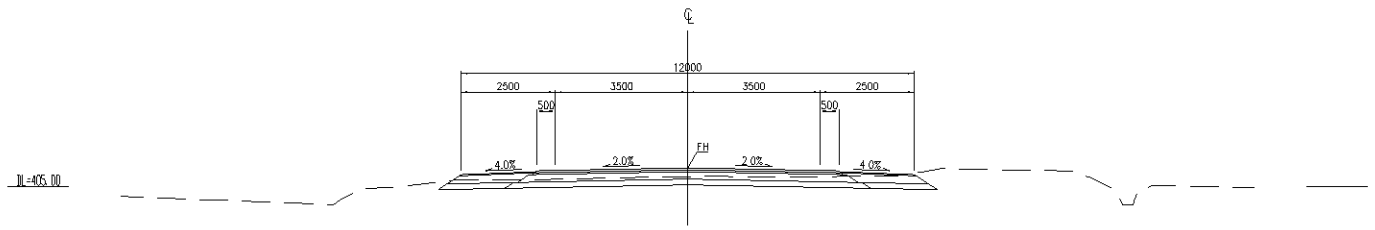

STA. 52+025
FH=405.230

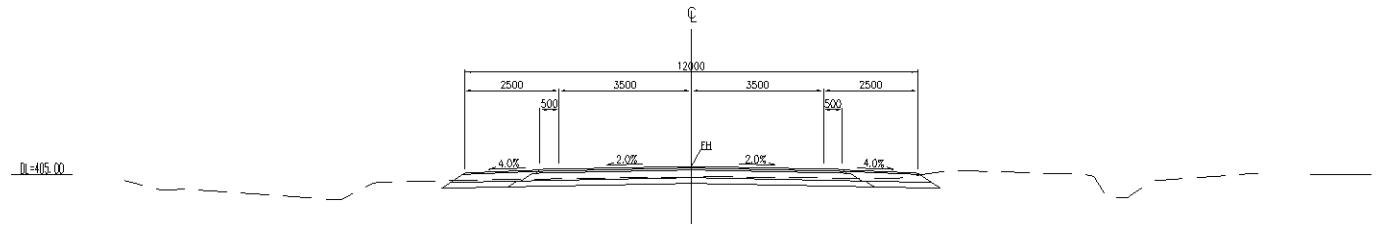

STA. 51+925
FH=405.617

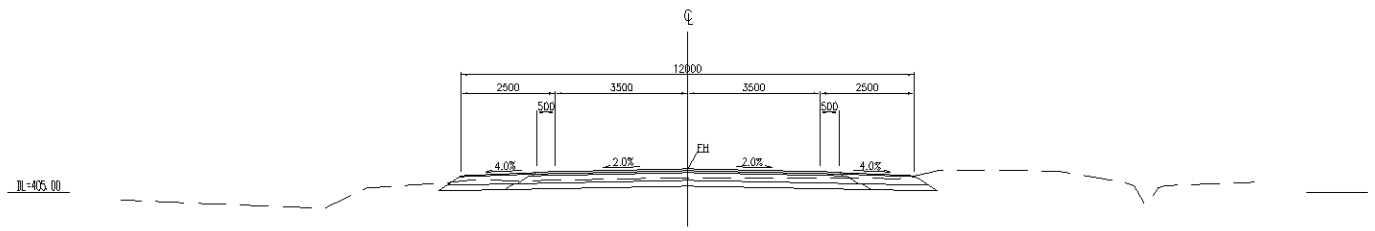

STA. 52+000
FH=405.308

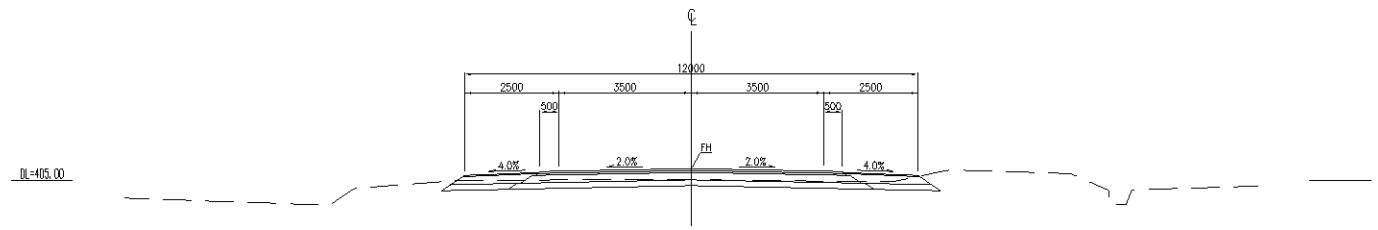

STA. 51+900
FH=405.746

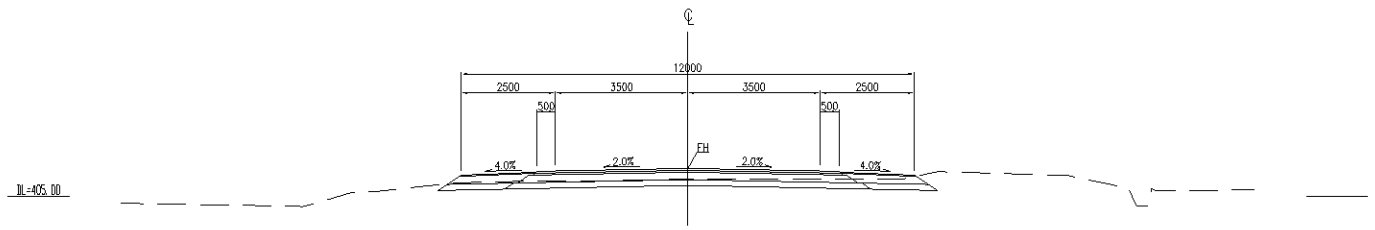

STA. 51+975
FH=405.408

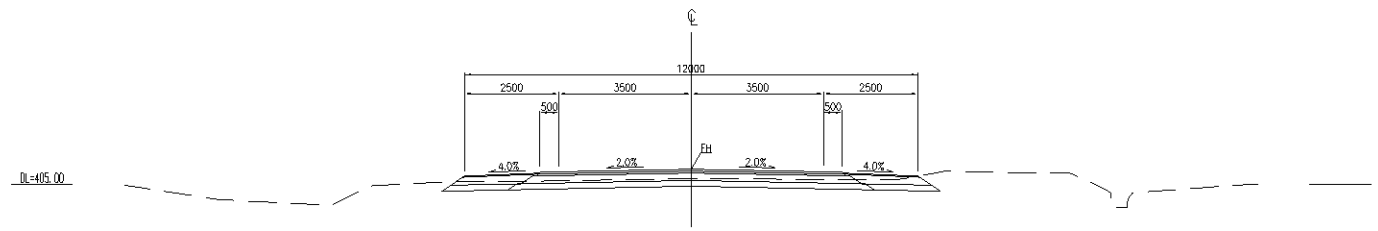

KATAHIRA & ENGINEERS INTERNATIONAL Designed by : Date : Checked by : Date :	MINISTRY OF TRANSPORT OF THE REPUBLIC OF TAJIKISTAN Approved by : Date :	THE PROJECT FOR REHABILITATION OF KURGAN TYUBE - DUSTI ROAD (PHASE-2)	TITLE : CROSS SECTION (67) 51+900~52+025	SCALE : 1/200	DRAWING No: CS-67	Rv

STA. 53+000
FH=409. 691

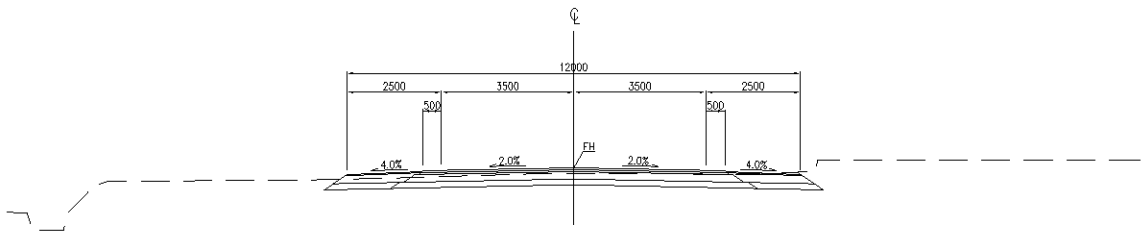

DL=405.00

STA. 53+075
FH=410. 005

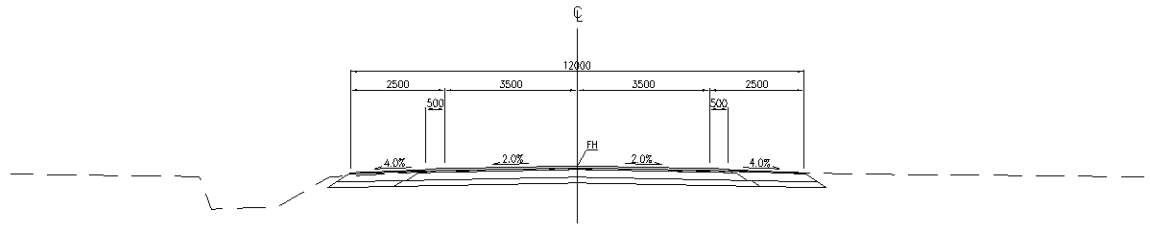

DL=405.00

STA. 52+975
FH=409. 506

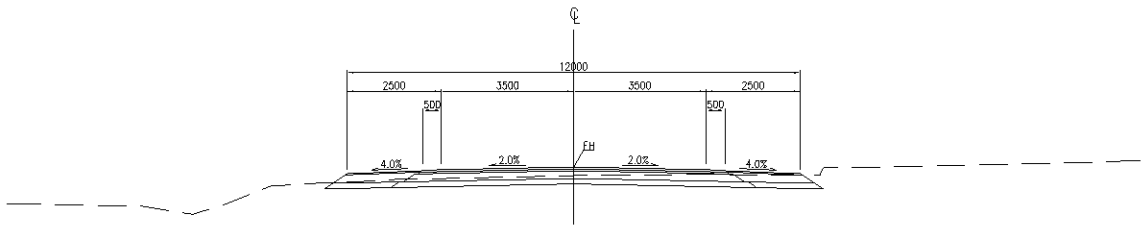

DL=405.00

STA. 53+050
FH=409. 928

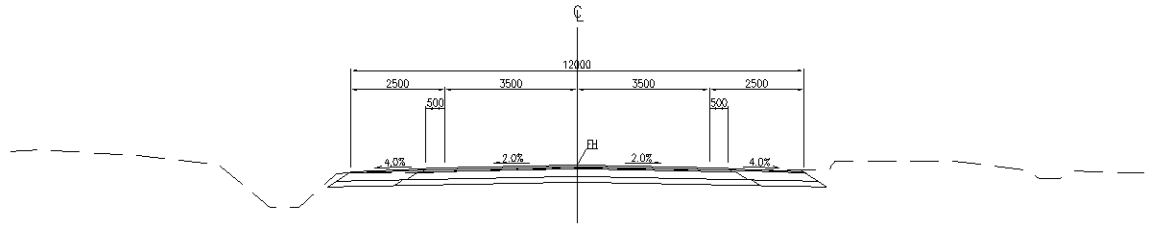

DL=405.00

STA. 52+950
FH=409. 278

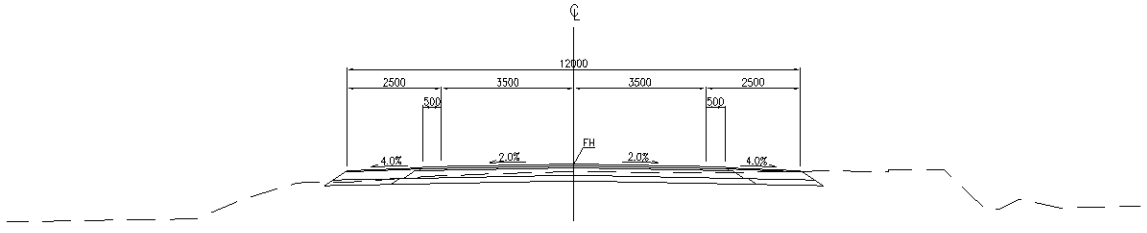

DL=405.00

STA. 53+025
FH=409. 831

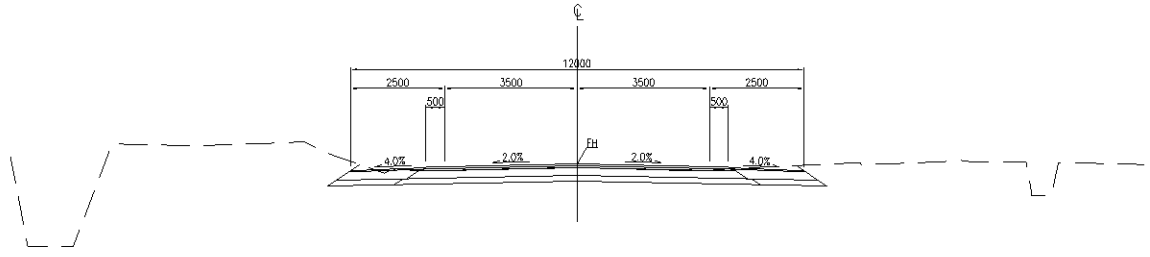

DL=405.00

KATAHIRA & ENGINEERS INTERNATIONAL Designed by : Date : Checked by : Date :	MINISTRY OF TRANSPORT OF THE REPUBLIC OF TAJIKISTAN Approved by : Date :	THE PROJECT FOR REHABILITATION OF KURGAN TYUBE - DUSTI ROAD (PHASE-2)	TITLE : CROSS SECTION (74) 52+950~53+075	SCALE : 1/200	DRAWING No: CS-74

STA. 54+050
FH=409.253

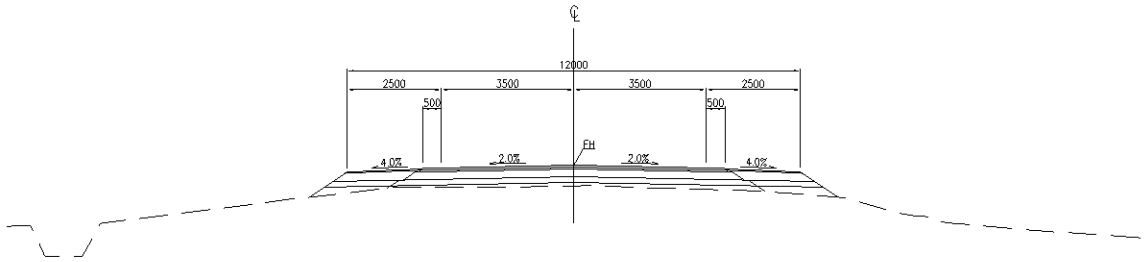

DL=405.00

STA. 54+125
FH=409.428

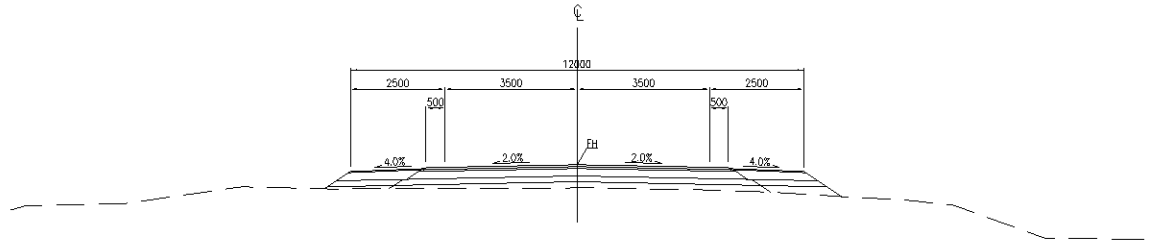

DL=405.00

STA. 54+025
FH=409.241

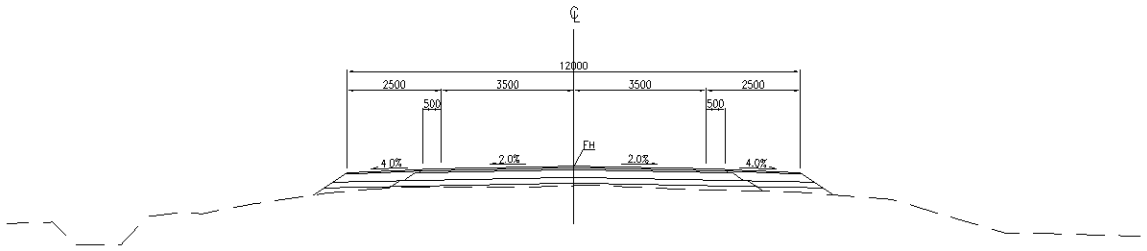

DL=405.00

STA. 54+100
FH=409.353

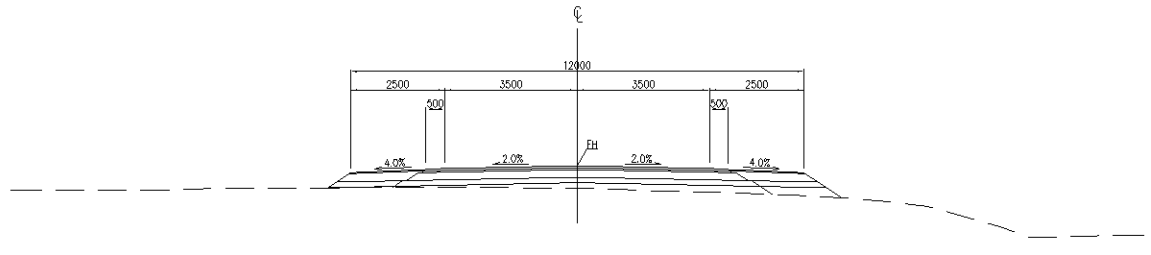

DL=405.00

STA. 54+000
FH=409.253

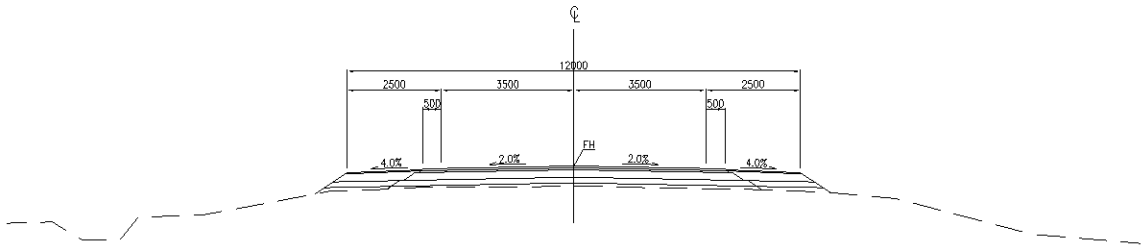

DL=405.00

STA. 54+075
FH=409.291

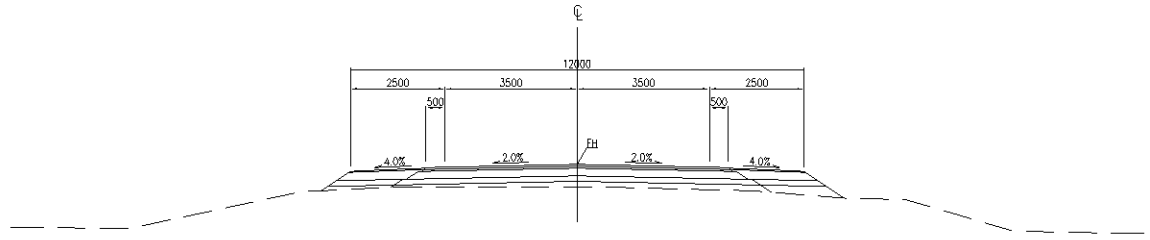

DL=405.00

KATAHIRA & ENGINEERS INTERNATIONAL Designed by : Date : Checked by : Date :	MINISTRY OF TRANSPORT OF THE REPUBLIC OF TAJIKISTAN Approved by : Date :	THE PROJECT FOR REHABILITATION OF KURGAN TYUBE - DUSTI ROAD (PHASE-2)	TITLE : CROSS SECTION (81) 54+000~54+125	SCALE : 1/200	DRAWING No: CS-81

STA. 54+950
FH=412.227

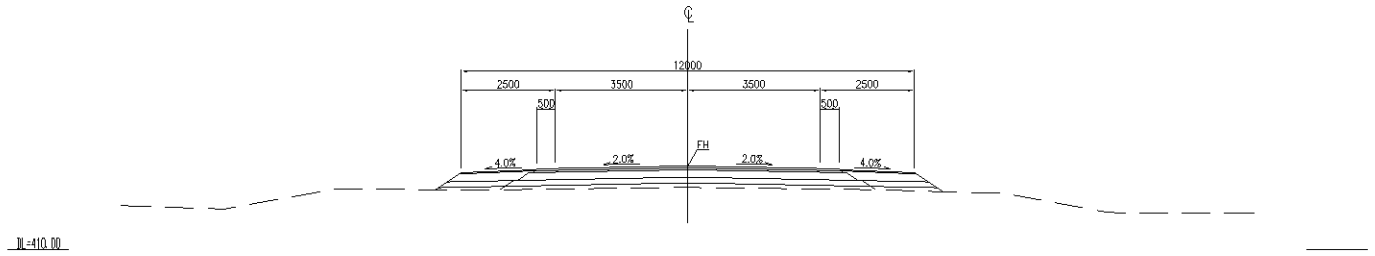

STA. 55+025
FH=412.404

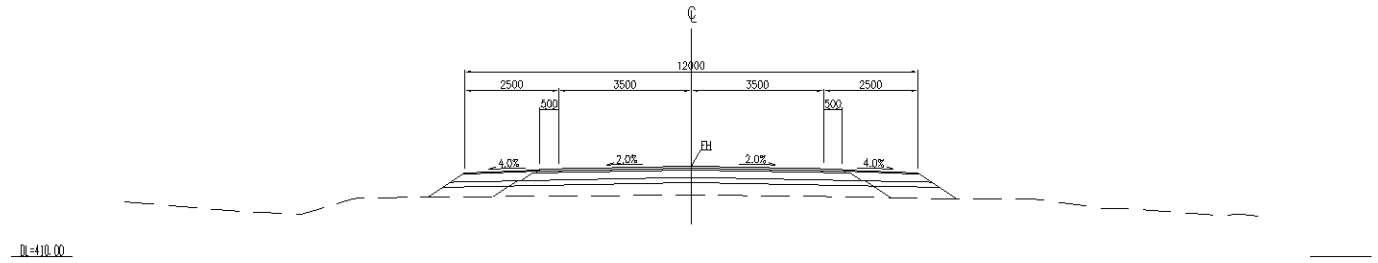

STA. 54+925
FH=412.141

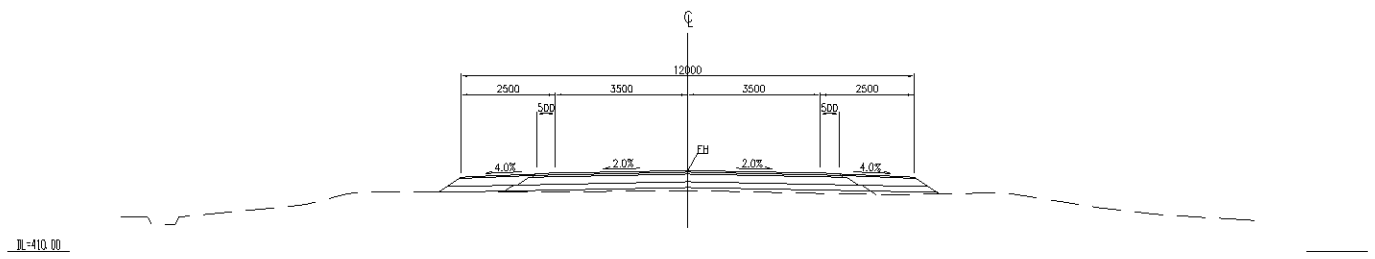

STA. 55+000
FH=412.360

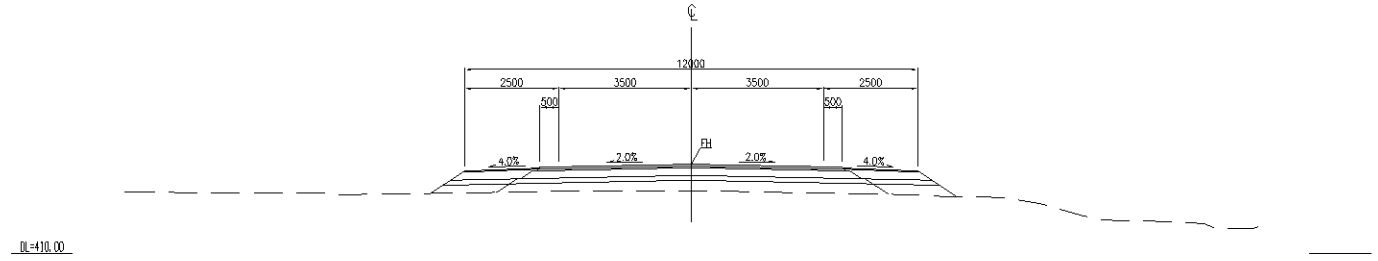

STA. 54+900
FH=412.053

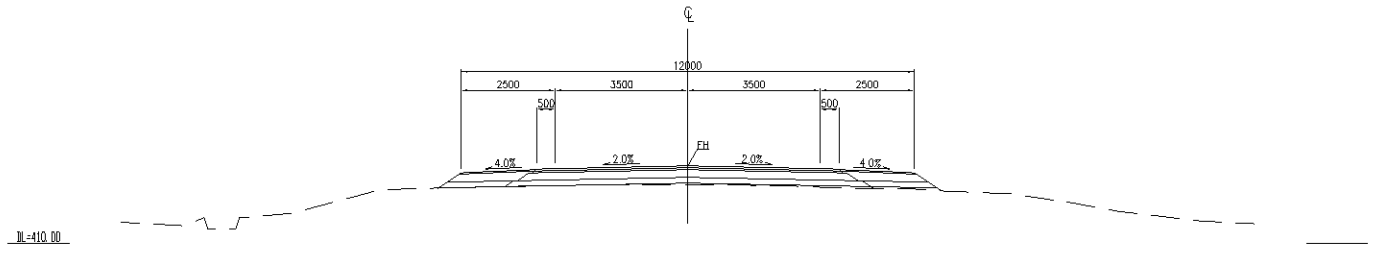

STA. 54+975
FH=412.301

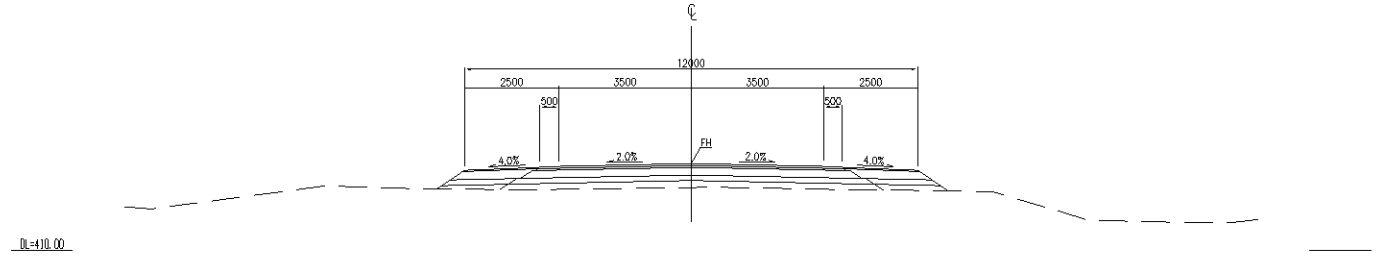

KATAHIRA & ENGINEERS INTERNATIONAL Designed by : Date : Checked by : Date :	MINISTRY OF TRANSPORT OF THE REPUBLIC OF TAJIKISTAN Approved by : Date :	THE PROJECT FOR REHABILITATION OF KURGAN TYUBE - DUSTI ROAD (PHASE-2)	TITLE : CROSS SECTION (87) 54+900~55+025	SCALE : 1/200	DRAWING No: CS-87

STA. 56+000
FH=415.068

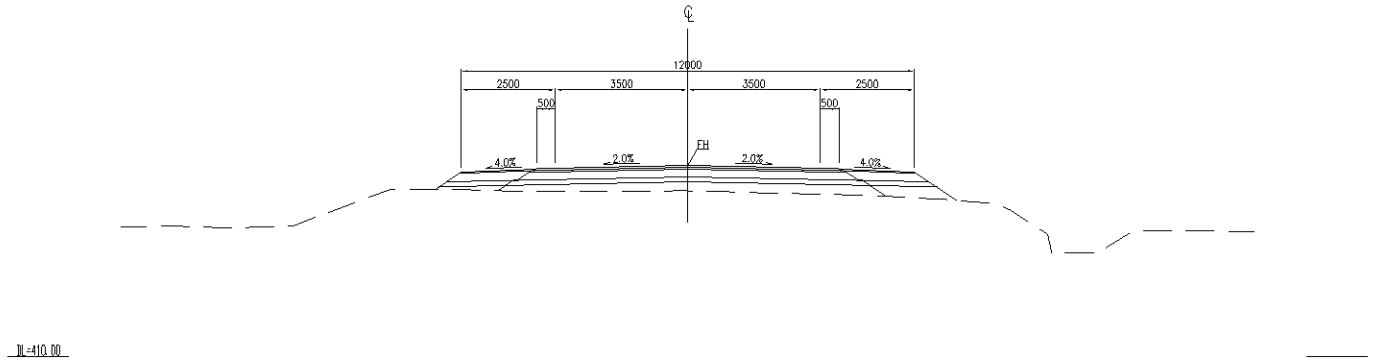

STA. 56+075
FH=415.196

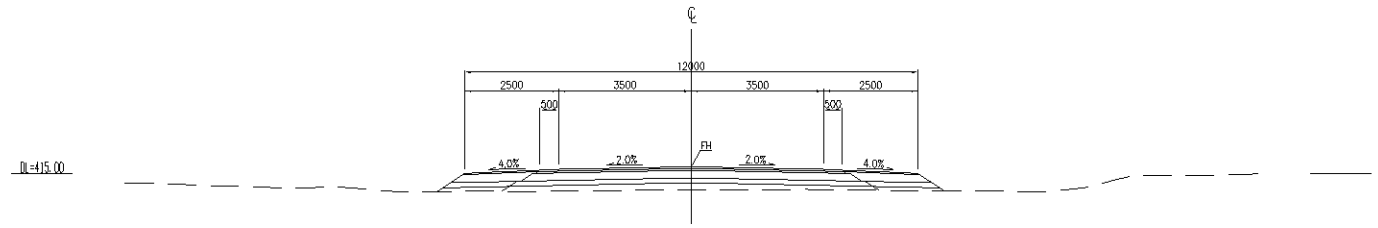

STA. 55+975
FH=414.981

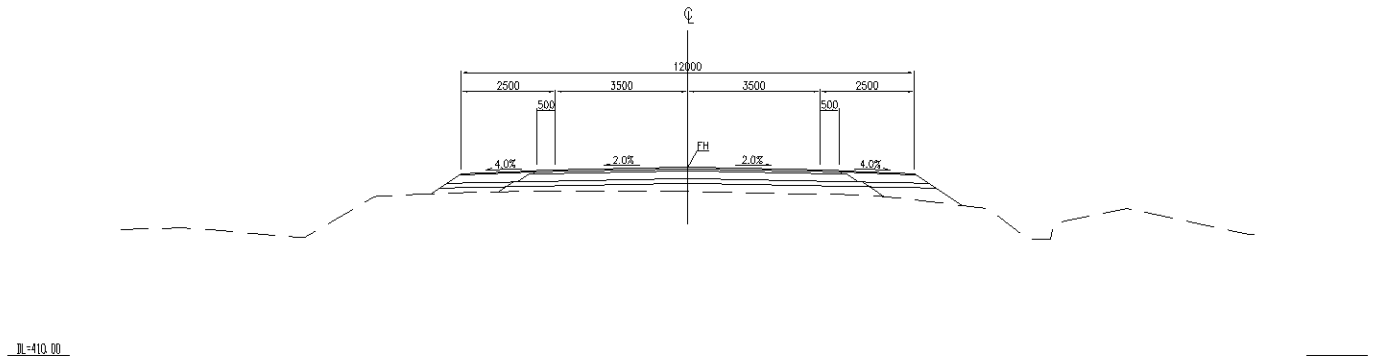

STA. 56+050
FH=415.198

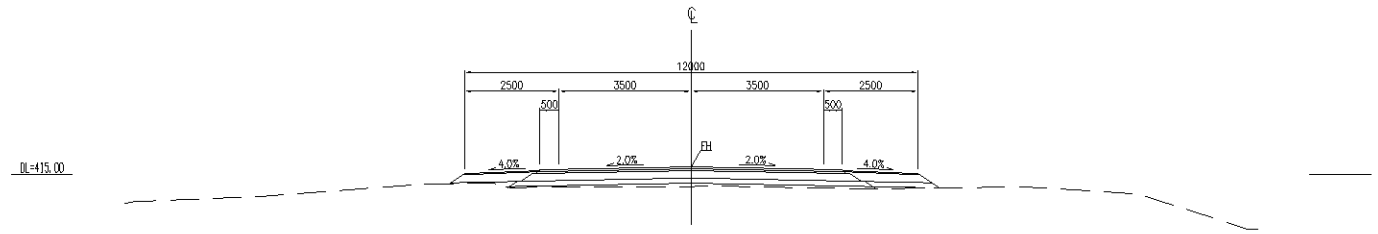

STA. 55+950
FH=414.893

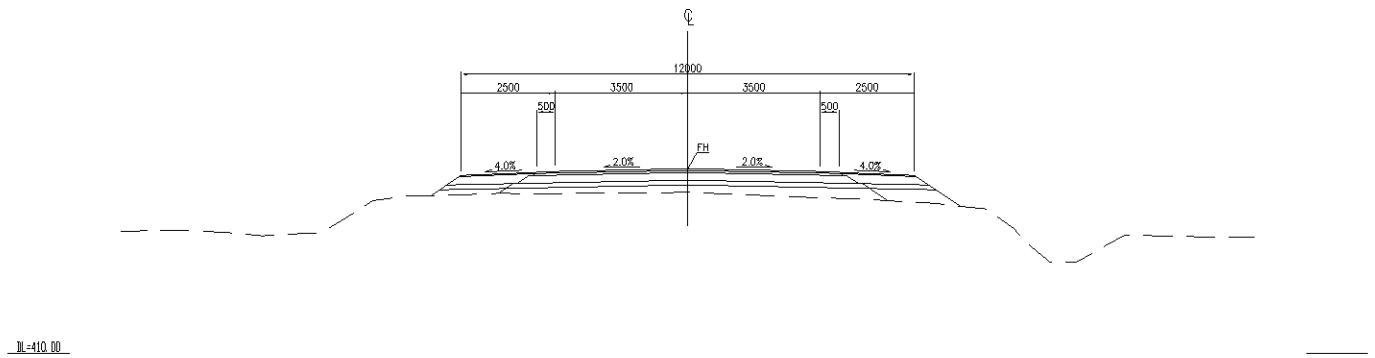

STA. 56+025
FH=415.152

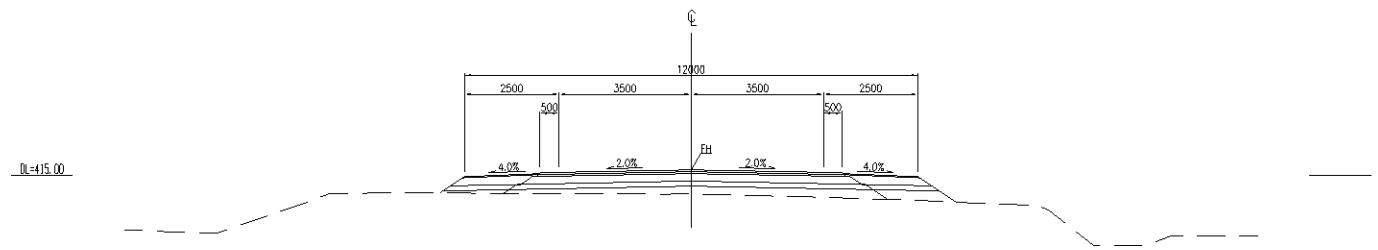

KATAHIRA & ENGINEERS INTERNATIONAL Designed by : Date : Checked by : Date :	MINISTRY OF TRANSPORT OF THE REPUBLIC OF TAJIKISTAN Approved by : Date :	THE PROJECT FOR REHABILITATION OF KURGAN TYUBE - DUSTI ROAD (PHASE-2)	TITLE : CROSS SECTION (94) 55+950~56+075	SCALE : 1/200	DRAWING No: CS-94	Rv

STA. 57+050
FH=416.506

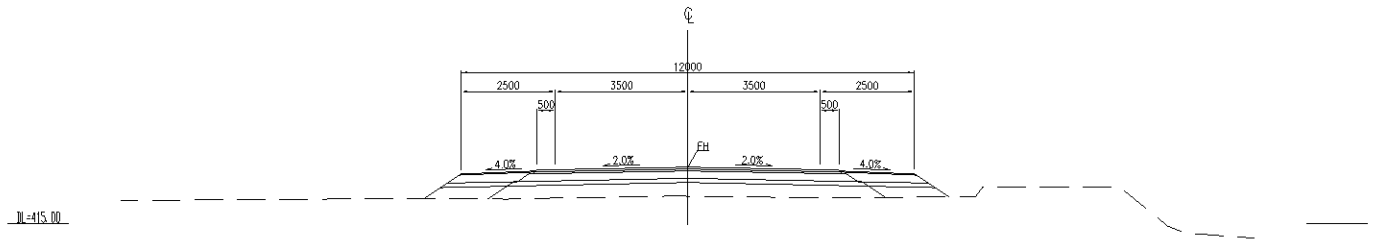

STA. 57+125
FH=416.372

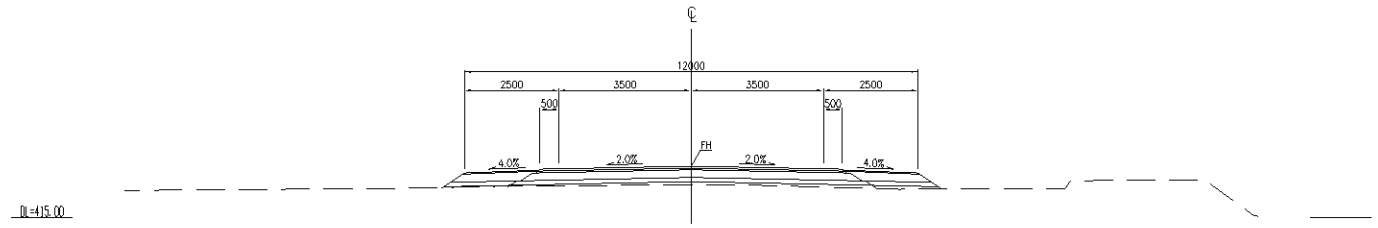

STA. 57+025
FH=416.562

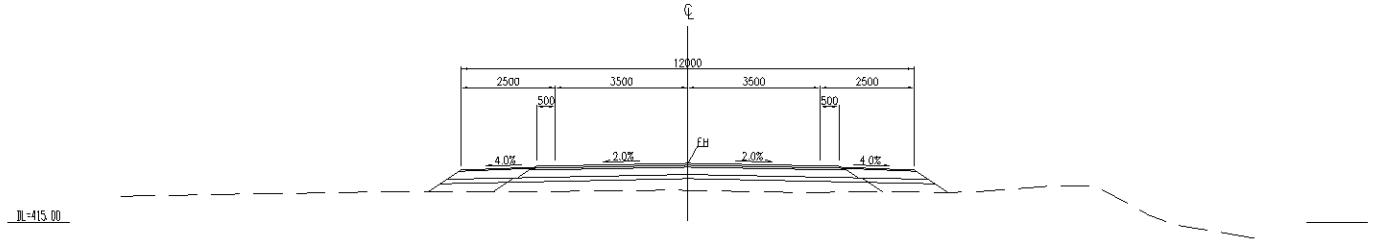

STA. 57+100
FH=416.374

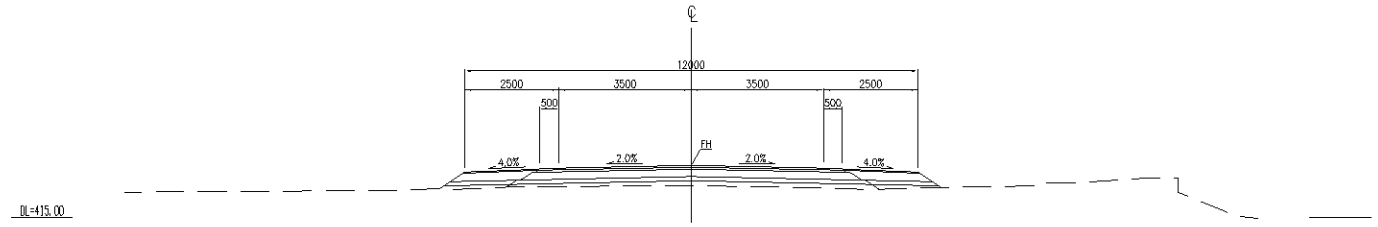

STA. 57+000
FH=416.581

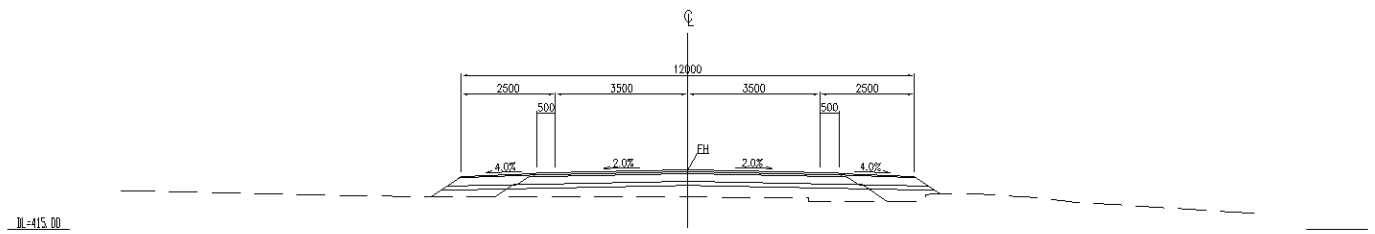

STA. 57+075
FH=416.431

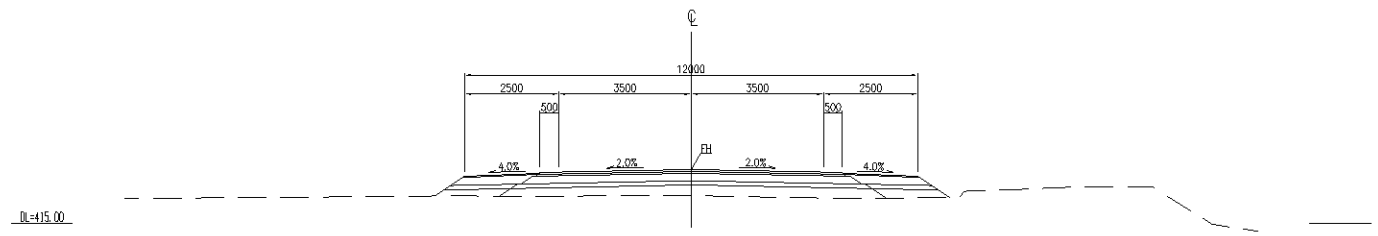

KATAHIRA & ENGINEERS INTERNATIONAL Designed by : Date : Checked by : Date :	MINISTRY OF TRANSPORT OF THE REPUBLIC OF TAJIKISTAN Approved by : Date :	THE PROJECT FOR REHABILITATION OF KURGAN TYUBE - DUSTI ROAD (PHASE-2)	TITLE : CROSS SECTION (101) 57+000~57+025	SCALE : 1/200	DRAWING No: CS-101

STA. 57+950
FH=420.595

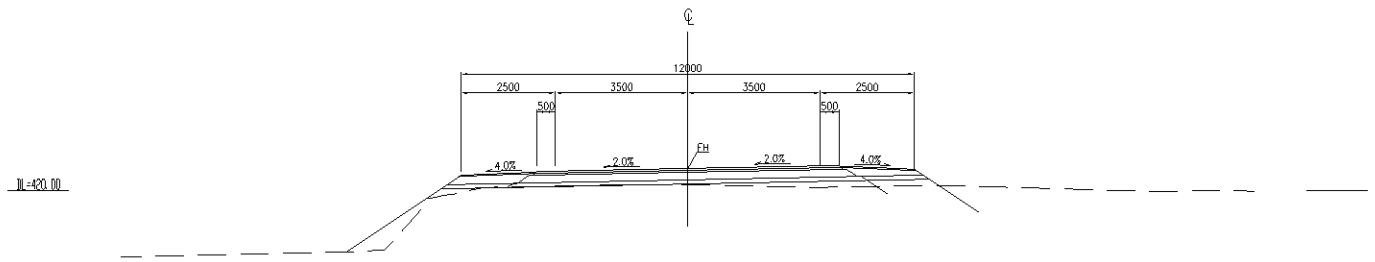

STA. 58+025
FH=420.076

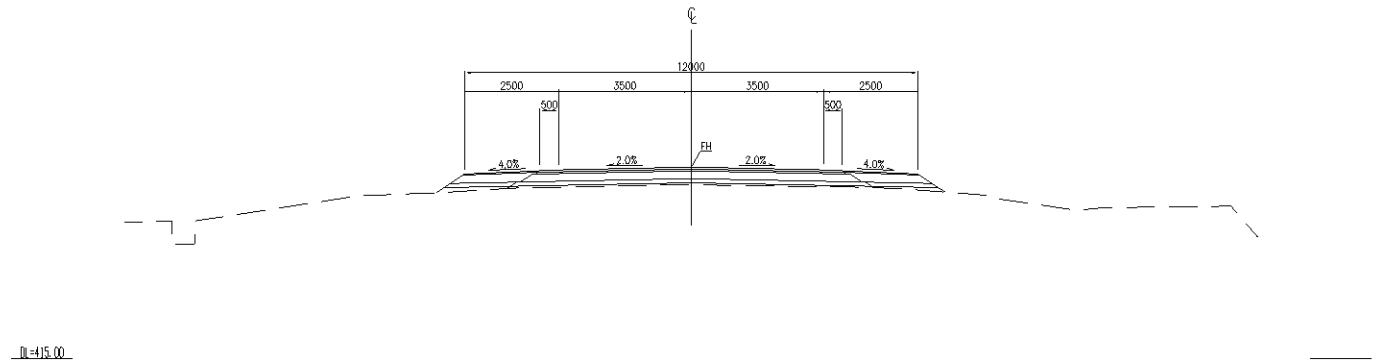

STA. 57+925
FH=420.655

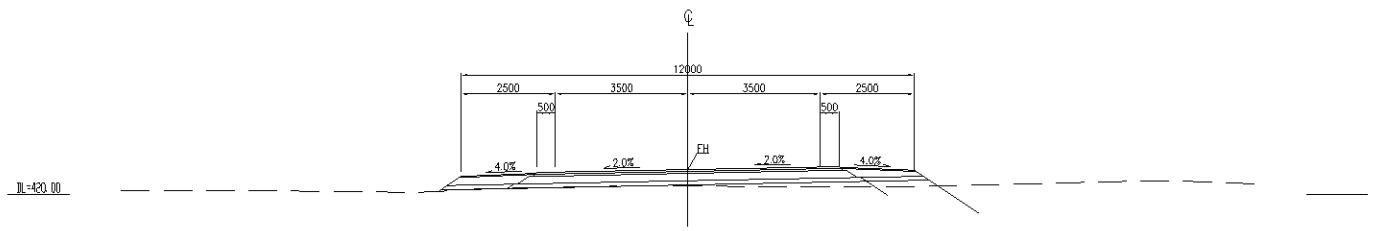

STA. 58+000
FH=420.303

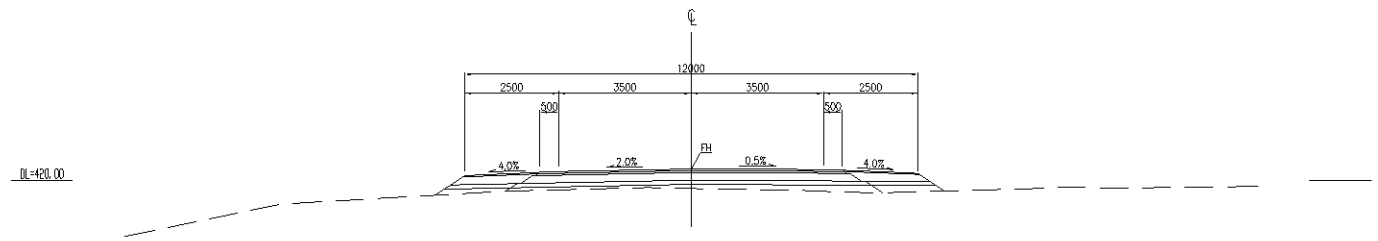

STA. 57+900
FH=420.657

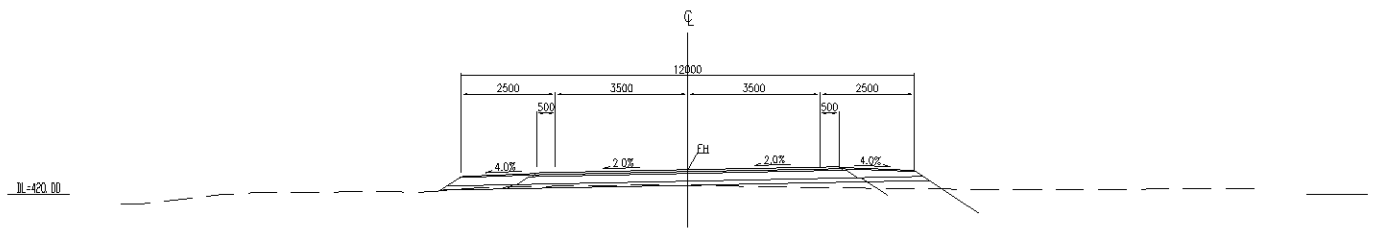

STA. 57+975
FH=420.478

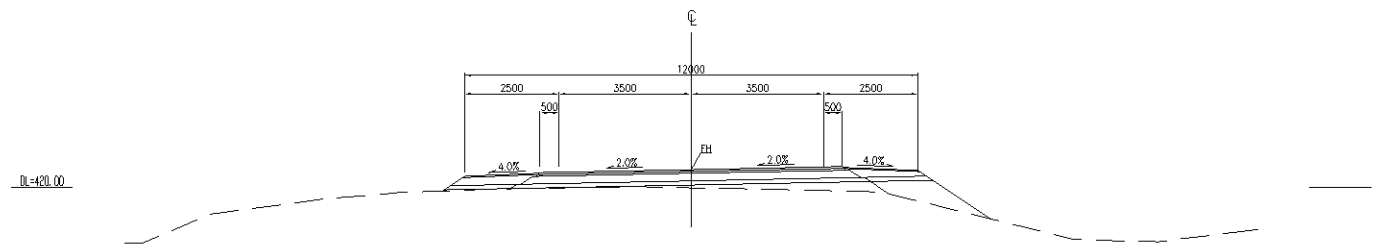

KATAHIRA & ENGINEERS INTERNATIONAL Designed by : Date : Checked by : Date :	MINISTRY OF TRANSPORT OF THE REPUBLIC OF TAJIKISTAN Approved by : Date :	THE PROJECT FOR REHABILITATION OF KURGAN TYUBE - DUSTI ROAD (PHASE-2)	TITLE : CROSS SECTION (107) 57+900~58+025	SCALE : 1/200	DRAWING No: CS-107

STA. 59+000
FH=419.654

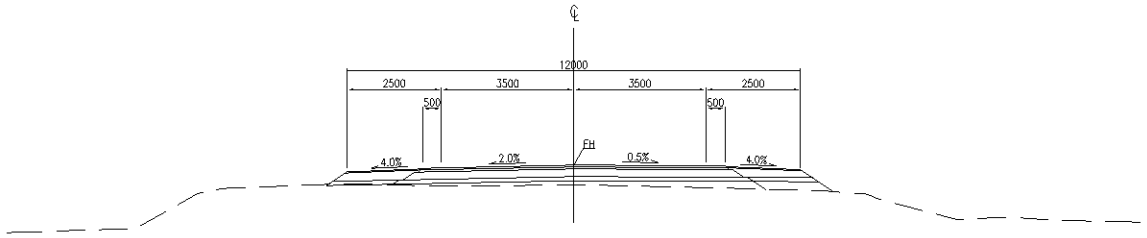

DL=415.00

STA. 59+075
FH=419.175

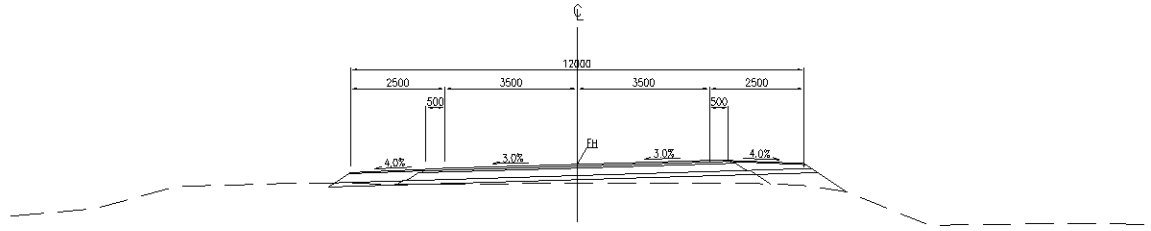

DL=415.00

STA. 58+975
FH=419.876

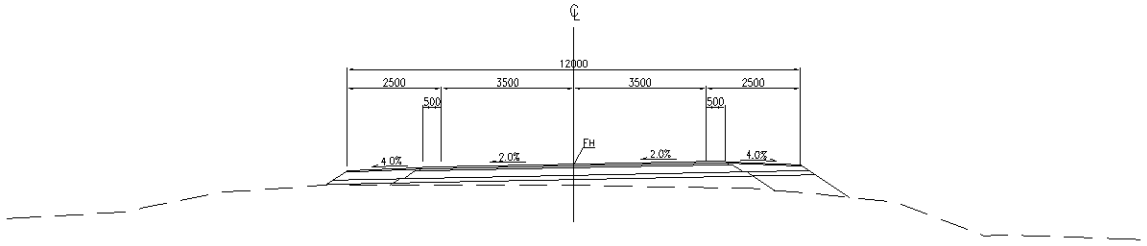

DL=415.00

STA. 59+050
FH=419.300

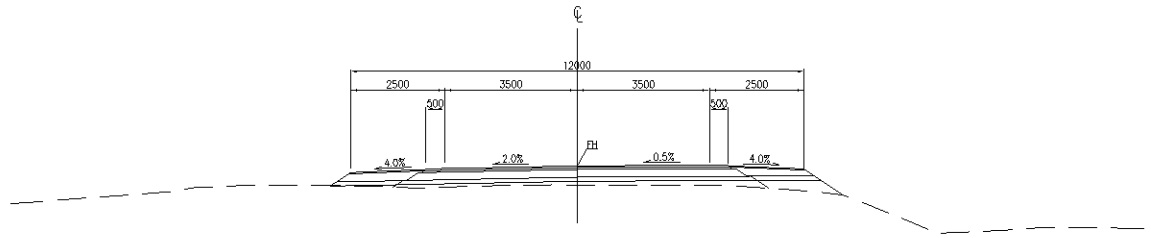

DL=415.00

STA. 58+950
FH=420.101

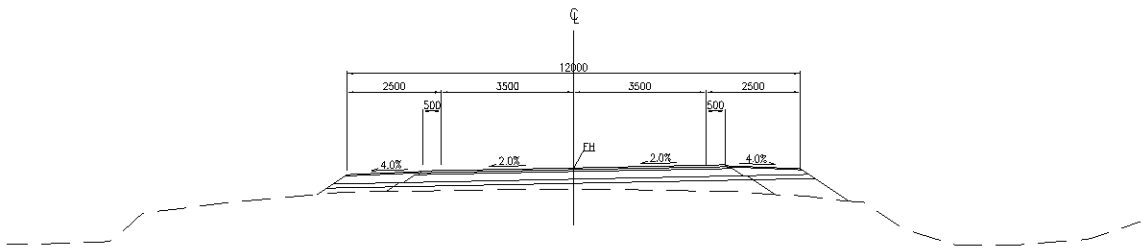

DL=415.00

STA. 59+025
FH=419.460

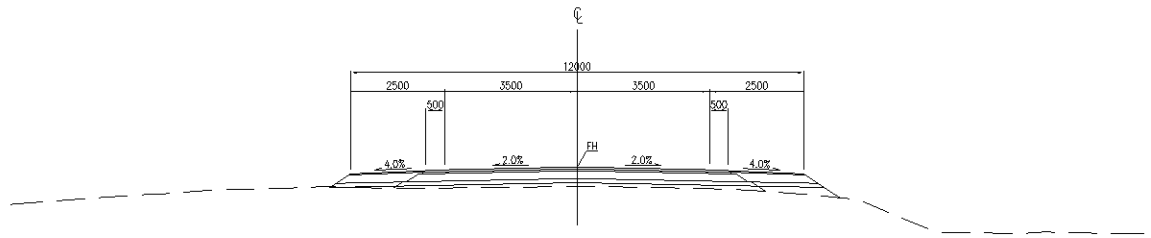

DL=415.00

KATAHIRA & ENGINEERS INTERNATIONAL Designed by : Date : Checked by : Date :	MINISTRY OF TRANSPORT OF THE REPUBLIC OF TAJIKISTAN Approved by : Date :	THE PROJECT FOR REHABILITATION OF KURGAN TYUBE - DUSTI ROAD (PHASE-2)	TITLE : CROSS SECTION (114) 58+950~59+075	SCALE : 1/200	DRAWING No: CS-114

Rv

STA. 59+750
FH=415.048

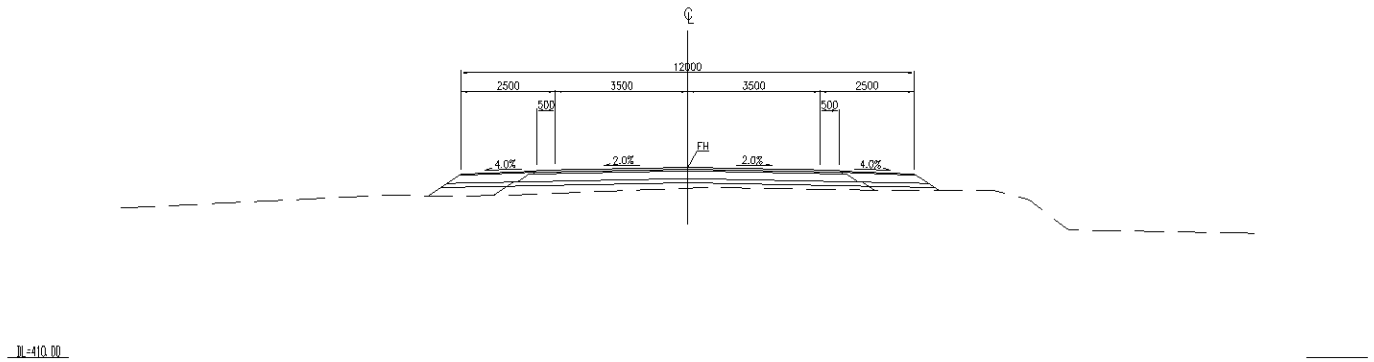

STA. 59+825
FH=414.546

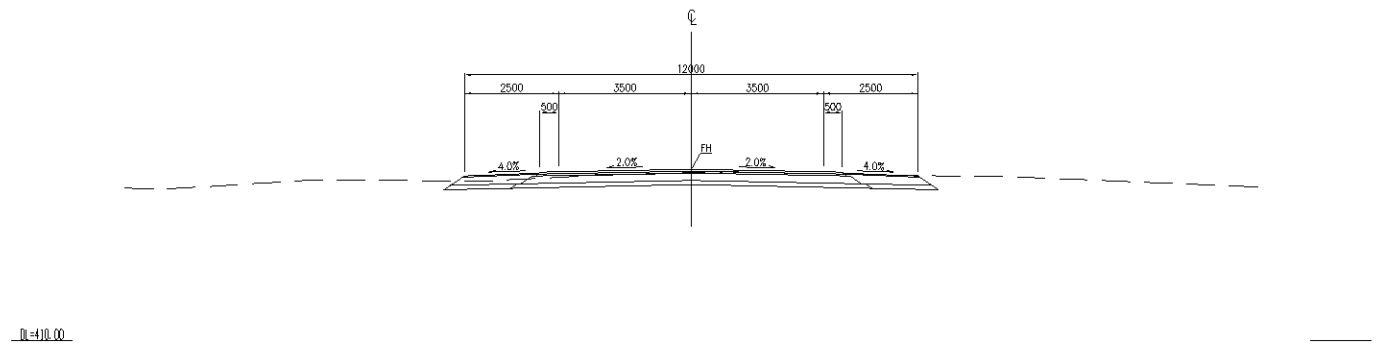

STA. 59+725
FH=415.321

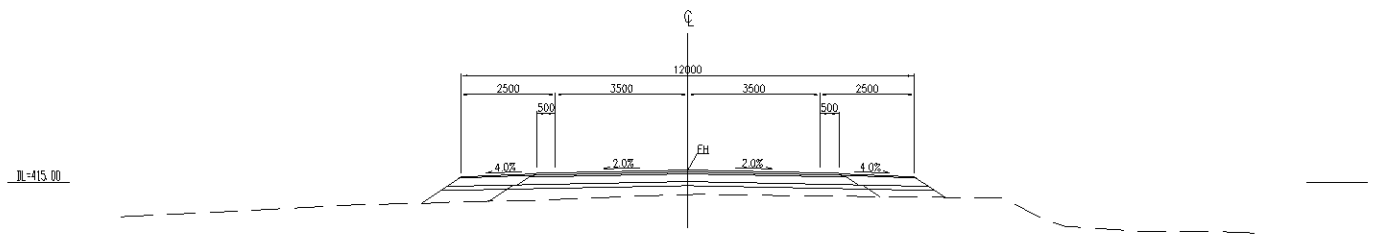

STA. 59+800
FH=414.660

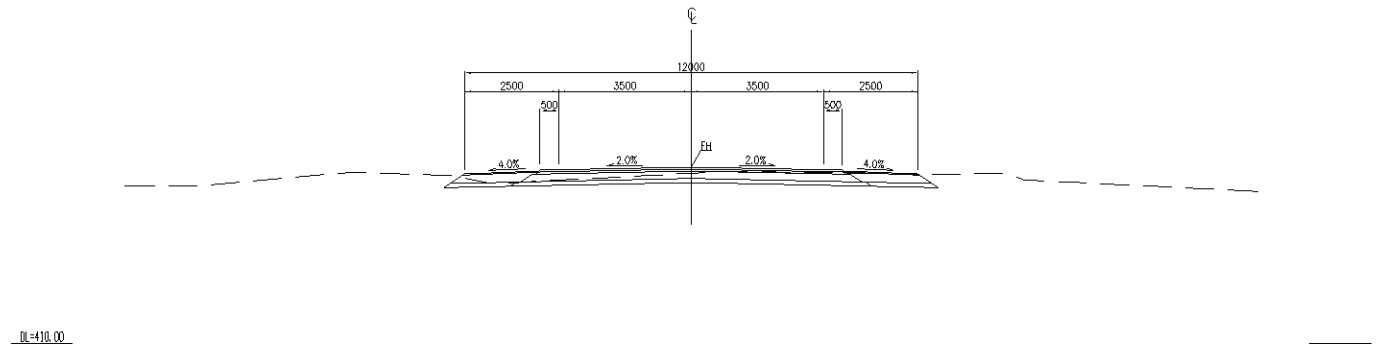

STA. 59+700
FH=415.621

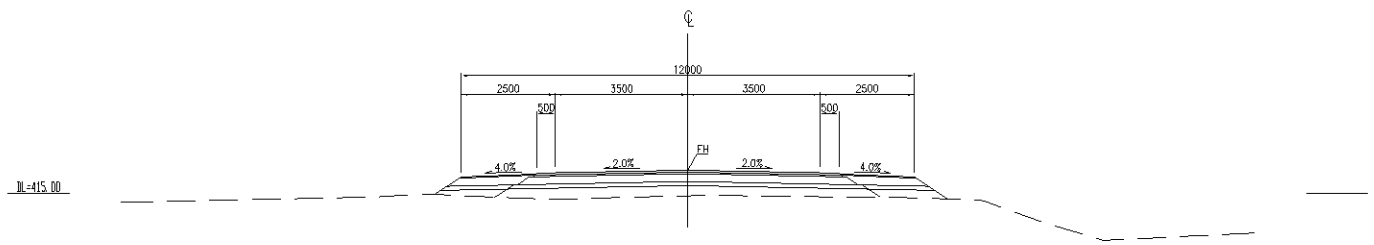

STA. 59+775
FH=414.827

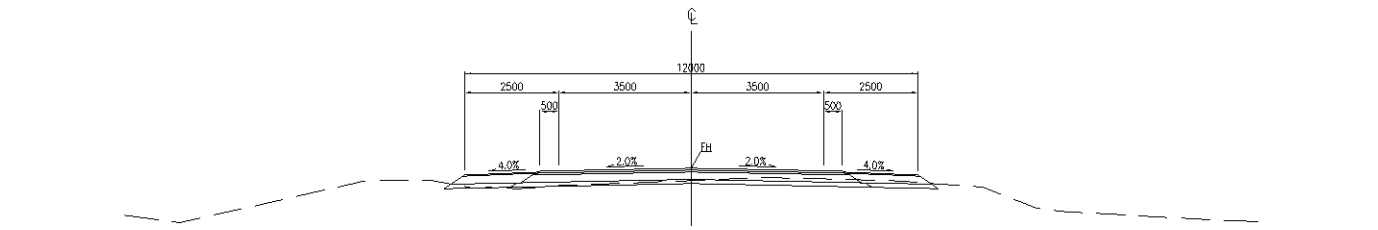

KATAHIRA & ENGINEERS INTERNATIONAL Designed by : Date : Checked by : Date :	MINISTRY OF TRANSPORT OF THE REPUBLIC OF TAJIKISTAN Approved by : Date :	THE PROJECT FOR REHABILITATION OF KURGAN TYUBE - DUSTI ROAD (PHASE-2)	TITLE : CROSS SECTION (119) 59+700~59+825	SCALE : 1/200	DRAWING No: CS-119

RETAINING WALL AND TOE REINFORCEMENT OF NO. 1 BRIDGE

SCALE AS SHOWN

RETAINING WALL OF NO. 1 BRIDGE

SCALE A3 1:40 A4 70.7%

SECTION

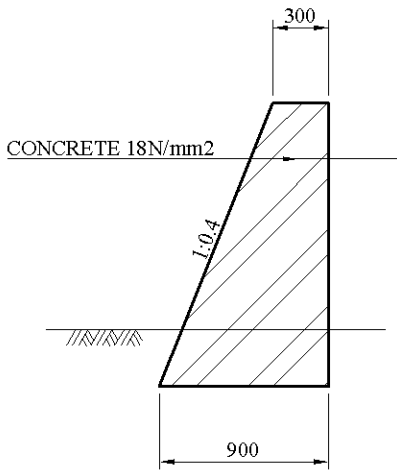

ELAVATION

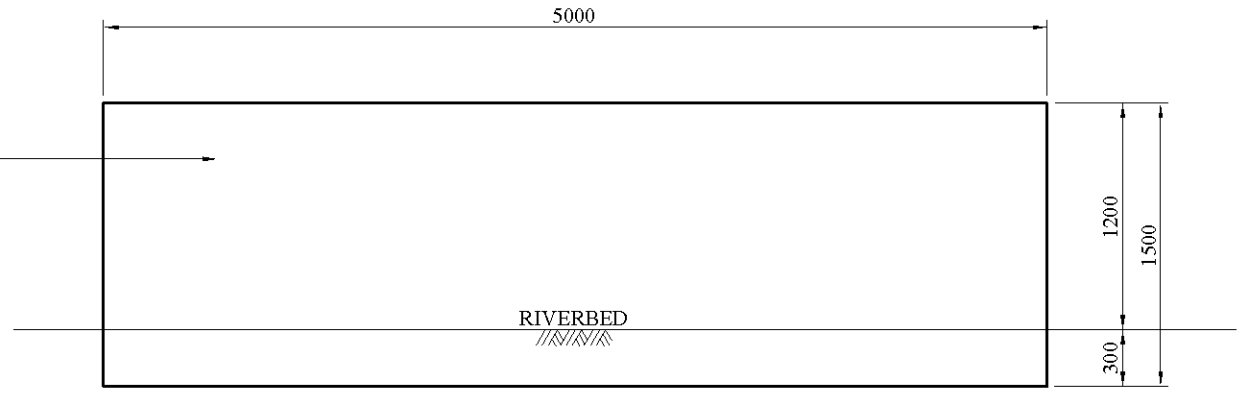

TOE REINFORCEMENT OF NO. 1 BRIDGE

SCALE A3 1:40 A4 70.7%

SECTION

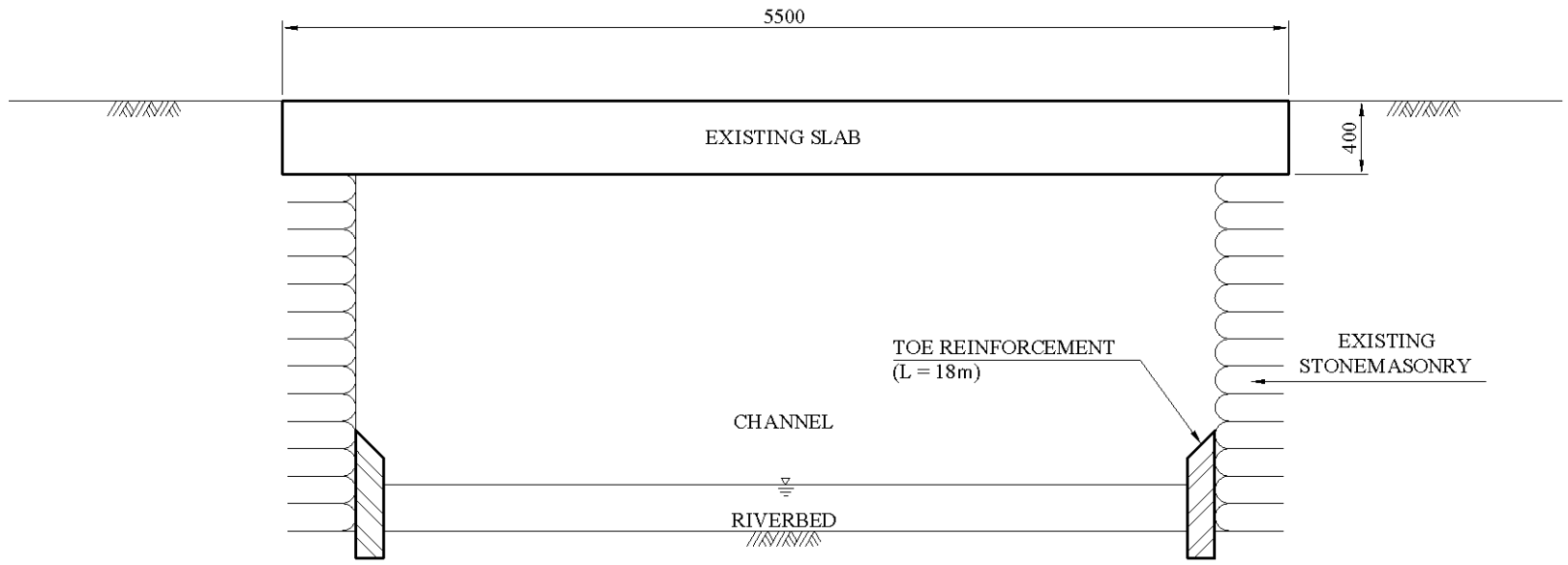

DETAIL OF TOE REINFORCEMENT

SCALE A3 1:20 A4 70.7%

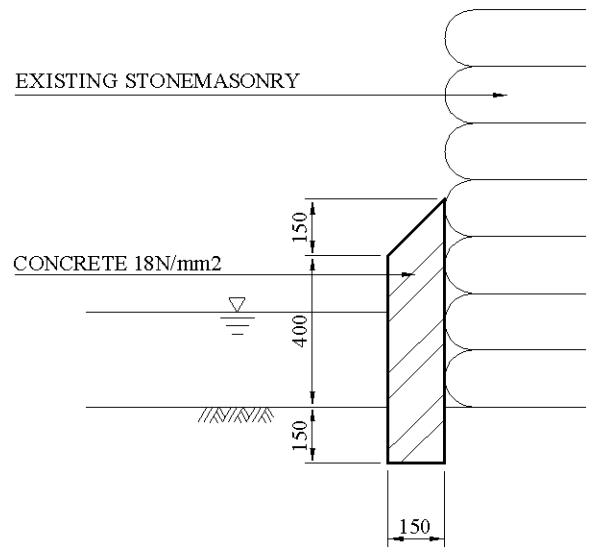

A6-21

KATAHIRA & ENGINEERS INTERNATIONAL Designed by : Date : Checked by : Date :	MINISTRY OF TRANSPORT OF THE REPUBLIC OF TAJIKISTAN Approved by : Date :	THE PROJECT FOR REHABILITATION OF KURGAN TYUBE - DUSTI ROAD (PHASE-2)	TITLE : RETAINING WALL AND TOE REINFORCEMENT OF NO. 1 BRIDGE	SCALE : AS SHOWN	DRAWING No: BR1-01

GENERAL VIEW OF No. 2 BRIDGE

ELEVATION S=1:200

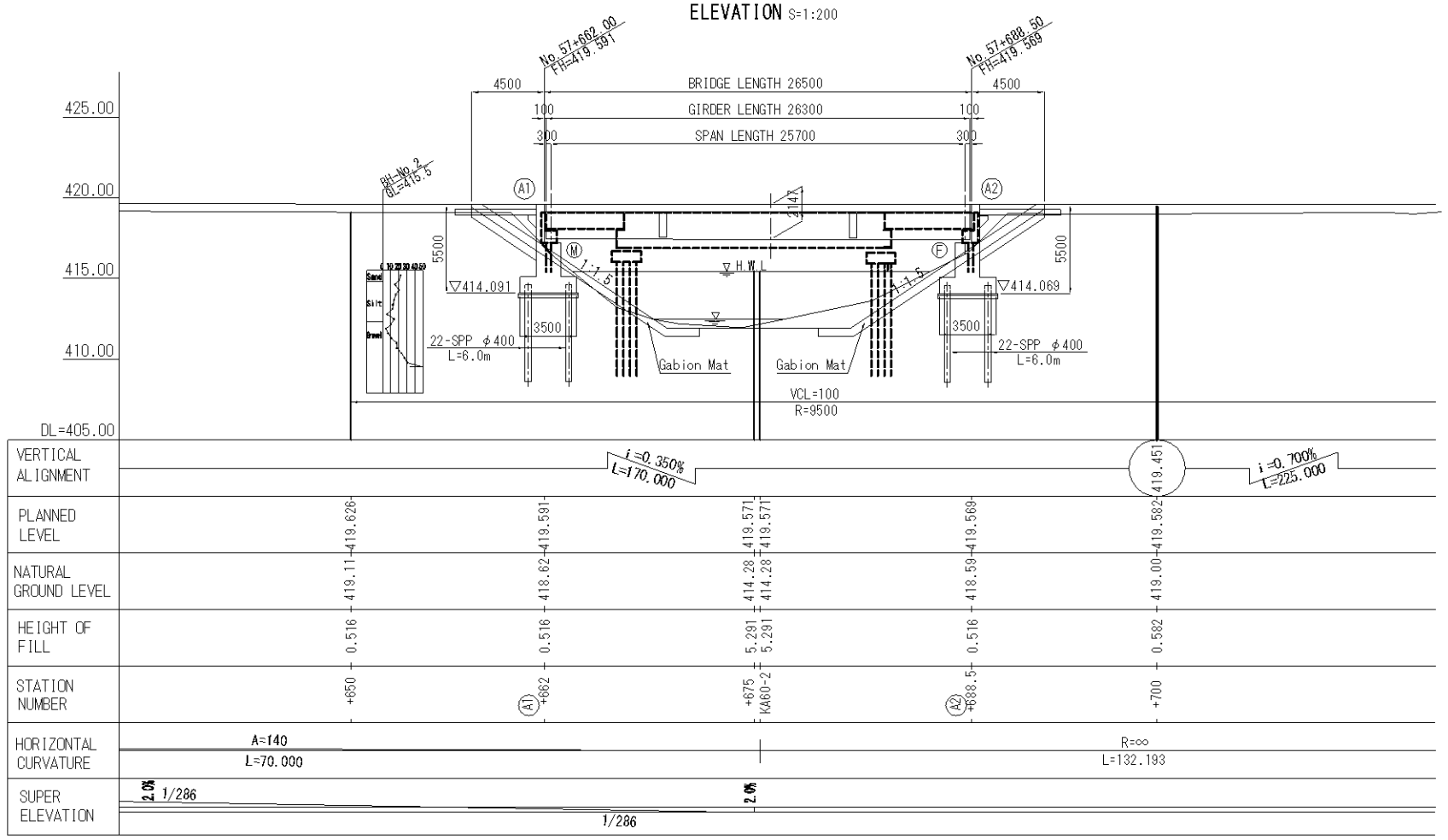

BRIDGE CROSS SECTION S=1:50

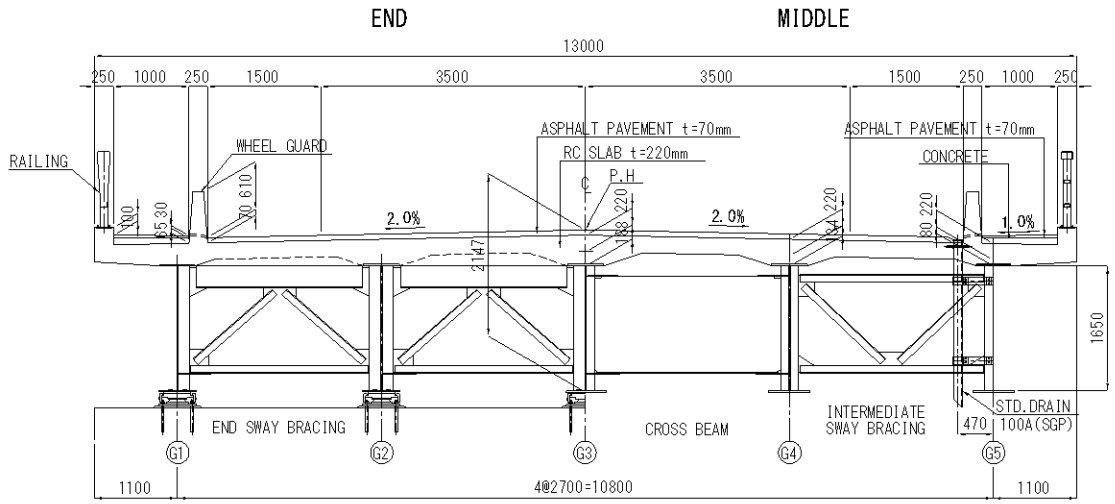

A1, A2 ABUTMENTS S=1:100

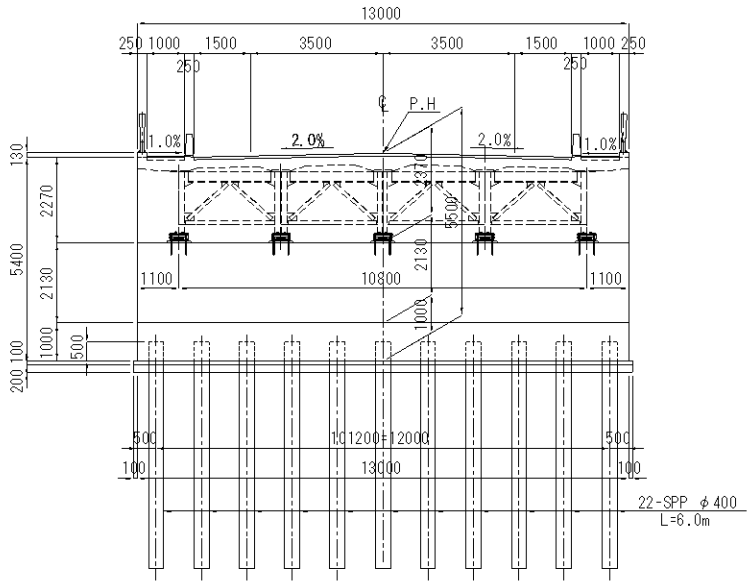

PLAN S=1:200

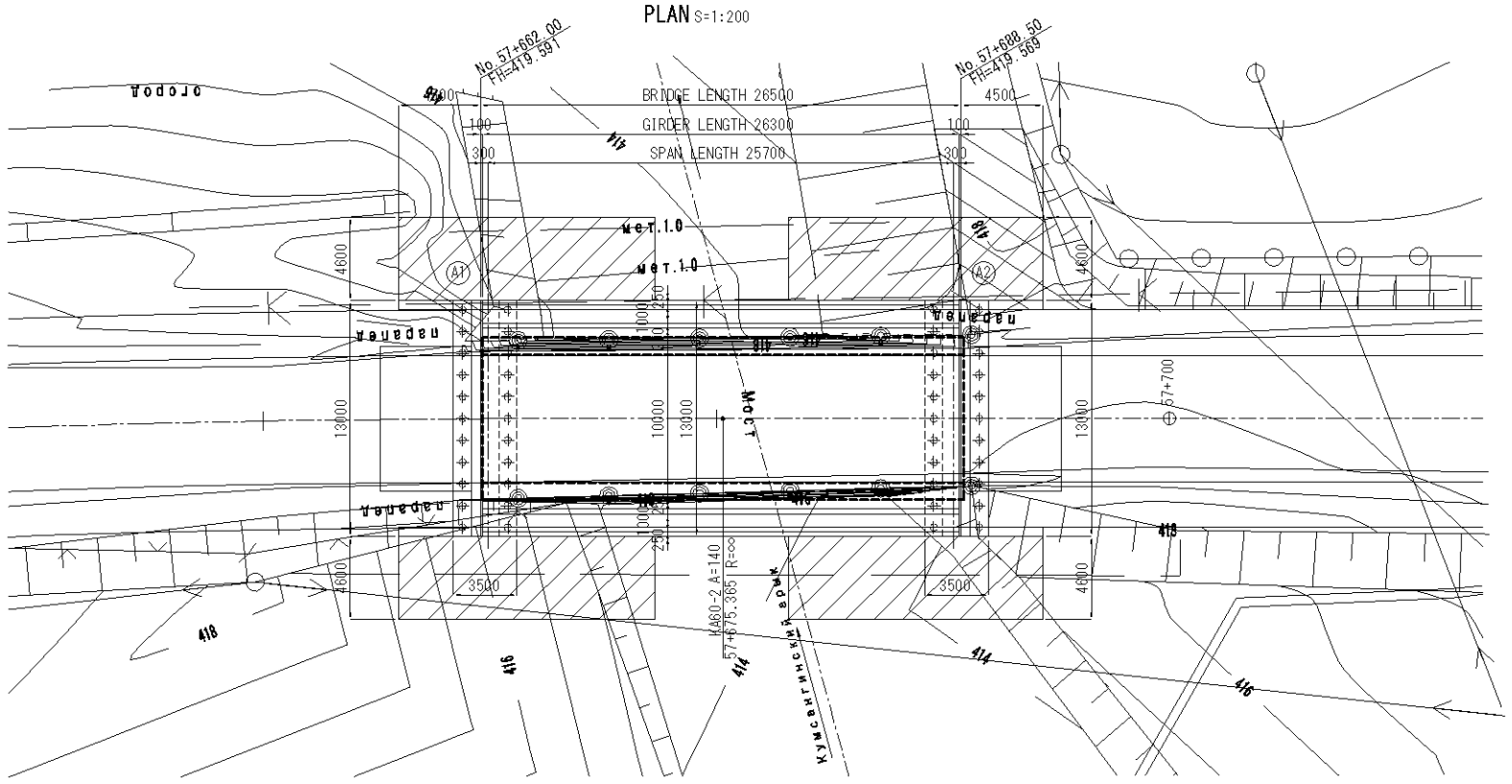

A6-22

KATAHIRA & ENGINEERS INTERNATIONAL Designed by : ____ Date : ____ Checked by : ____ Date : ____	MINISTRY OF TRANSPORT OF THE REPUBLIC OF TAJIKISTAN Approved by : ____ Date : ____	THE PROJECT FOR REHABILITATION OF KURGAN TYUBE - DUSTI ROAD (PHASE-2)	TITLE : GENERAL VIEW OF NO.2 BRIDGE	SCALE : AS SHOWN	DRAWING No: BR2-01

STRUCTURAL DRAWING OF SUPERSTRUCTURE

PROFILE S=1:100

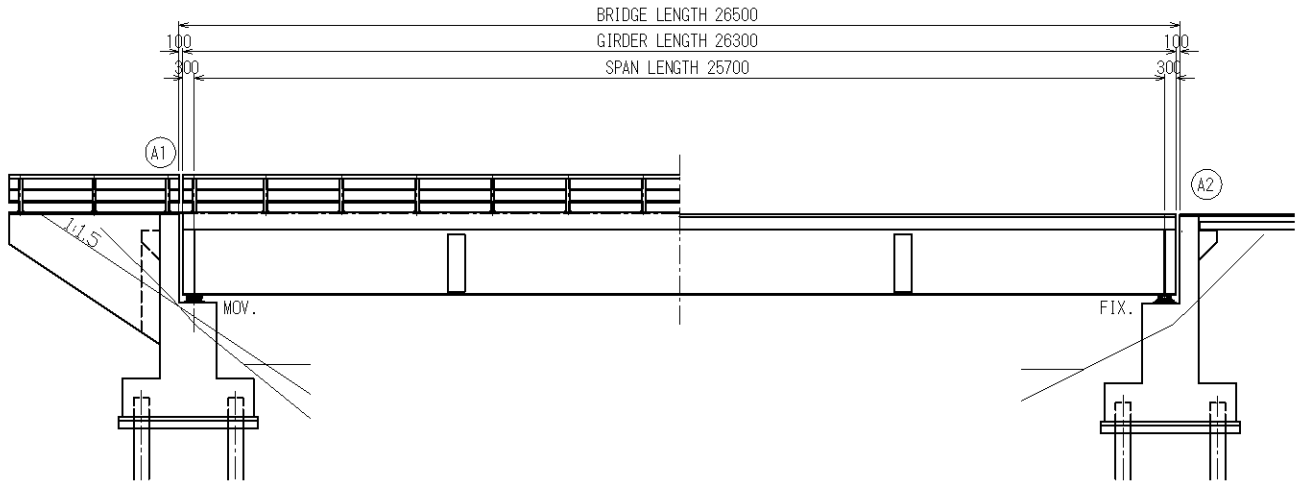

CROSS SECTION S=1:50

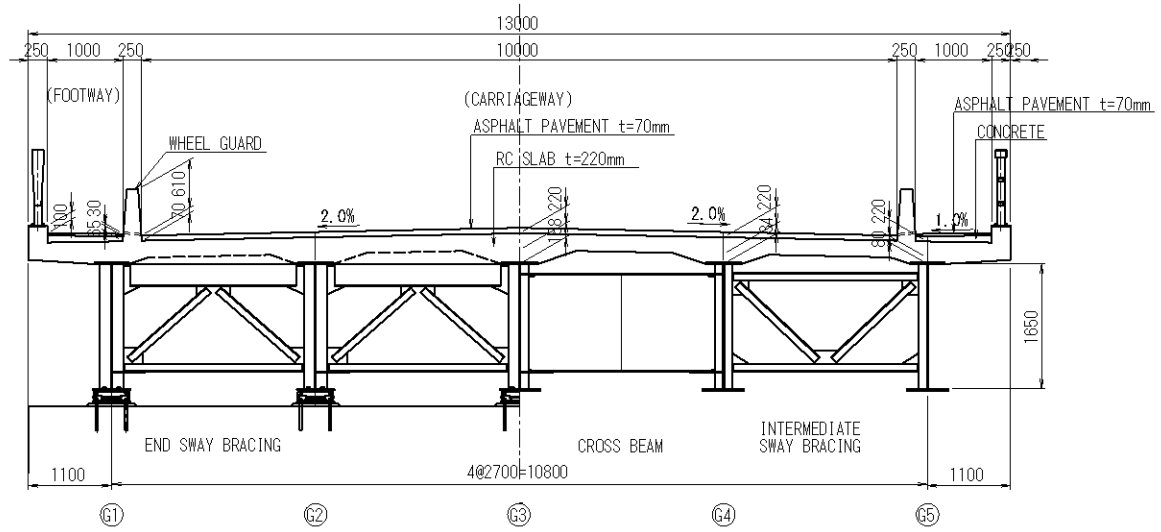

PLAN S=1:100

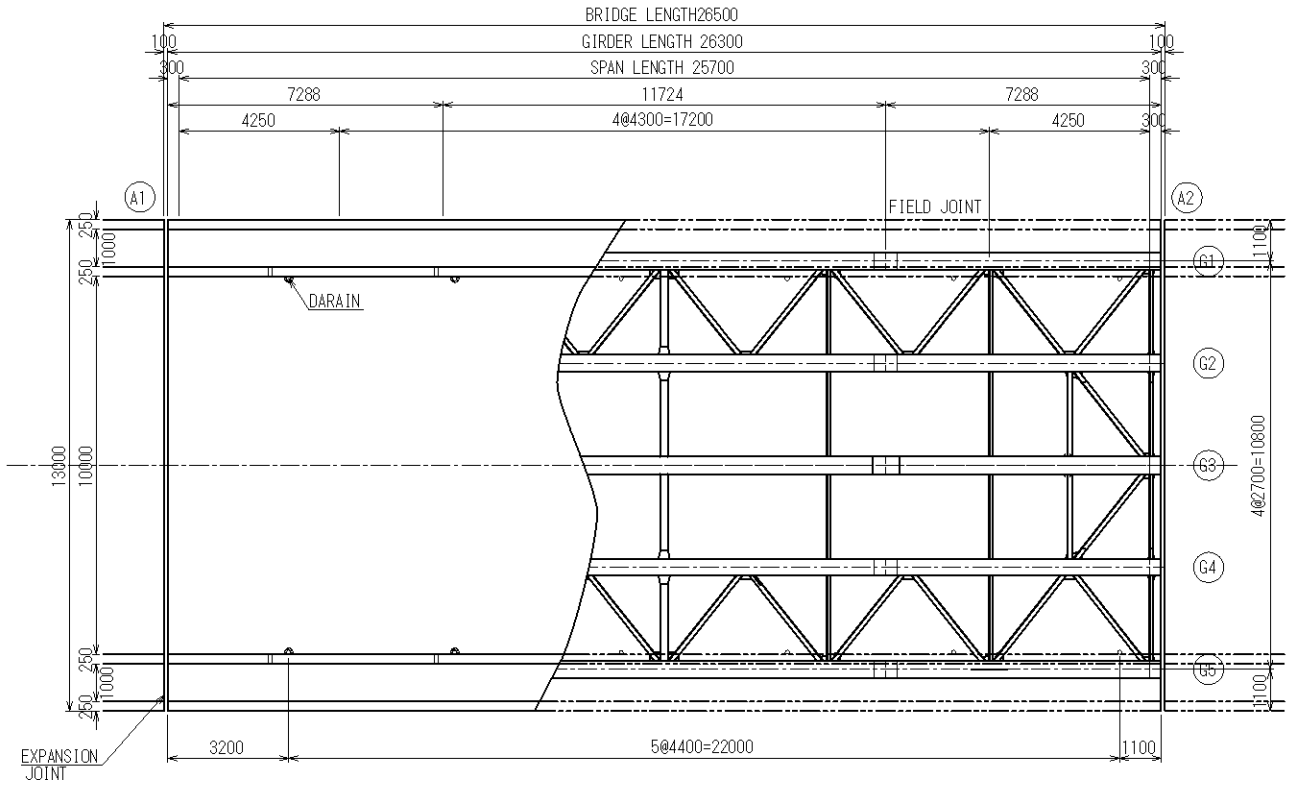

TYPICAL SECTION S=1:50

CENTER OF SPAN

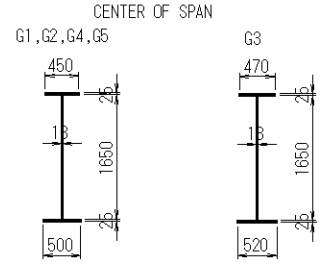

HEIGHT OF BRIDGE BASE G3 (G1,G2,G4,G5)

	A1	A2
LEVEL OF ROAD	419.591	419.569
PAVEMENT THICKNESS	70	
TRANSVERSE SLOPE	108	
SLAB THICKNESS	220	
HEIGHT OF HAUNCH	80	
HEIGHT OF WEB	1650	
L.FLANGE THICKNESS	22(19)	
SOLE PLLATE THICKNESS	22	
HEIGHT OF SHOE	157	173
MORTAR THICKNESS	30(33)	
TOTAL	2359	2375
LEVEL OF BRIDGE BASE	417.232	417.194

DESIGN CONDITION

ROAD CLASS	NATIONAL ROAD
DESIGN SPEED	V=80km/h
DESIGN DAILY TRAFFIC VOLUME OF HEAVY VEHICLE	500～1000/DAY/WAY
LIVE LOAD	LIVE LOAD TYPE-B (JAPAN ROAD ASSOCIATION)
TYPE OF SUPERSTRUCTURE	SIMPLE NON-COMPOSITE STEEL GIRDER
BRIDGE LENGTH	26.500 m
GIRDER LENGTH	26.300 m
SPAN LENGTH	25.700 m
CARRIAGE WIDTH	10.000 m
FOOT WAY WIDTH	1.000 m
VERTICAL SLOPE	0.000 %
TRANSVERSE SLOPE	1.000 % 2.000 % 2.000 % 1.000 %
PLANE ALIGNMENT	R=∞
SKEW ANGLE	90° 00'00"
SEISMIC COEFFICIENT	kh=0.05
PAVEMENT	ASPHALT PAVEMENT CARRIAGE WAY t=70mm FOOTWAY t=30mm
SLAB	RC-SLAB t=220mm (σck=24 N/mm2) REINFORCING BAR : SD295A
RAILING	H=1.1m
MATERIAL GRADE	SS400,SM400,SM490,S10T
DESIGN STANDARD	SPECIFICATIONS FOR HIGHWAY BRIDGES JAPAN ROAD ASSOCIATION I～V (MARCH-2002)

MATERIALS

ITEM	UNIT	QUANTITY	REMARKS
STEEL	t	58.1	LARGE 45.1 SMALL 11.3 PURCHASING 1.7
CONCRETE	m³	103.4	
DEFORMED BAR	t	20.4	SD295A
PAVEMENT(CARRIAGE WAY)	m²	263.0	ASPHALT 70mmTHICK
PAVEMENT(FOOT WAY)	m²	52.6	ASPHALT 30mmTHICK
RAILING	m	52.8	STEEL 2.1t
EXPANSION JOINT	m	25.0	STEEL 5.6t
DRAINS	piece	12	STEEL 0.34t
STEEL BEARING SHOE	piece	10	STANDARD B TYPE FIX-800kNx5,MOV-860kNx5

KATAHIRA & ENGINEERS INTERNATIONAL

Designed by : Date :
Checked by : Date :

MINISTRY OF TRANSPORT OF THE REPUBLIC OF TAJIKISTAN

Approved by : Date :

THE PROJECT FOR REHABILITATION OF KURGAN TYUBE - DUSTI ROAD (PHASE-2)

TITLE : STRUCTURAL DRAWING OF SUPERSTRUCTURE

SCALE : AS SHOWN

DRAWING No: BR2-02

Rv.

MAIN GIRDER SCALE 1:30

G1, G5(G2, G4) GIRDER

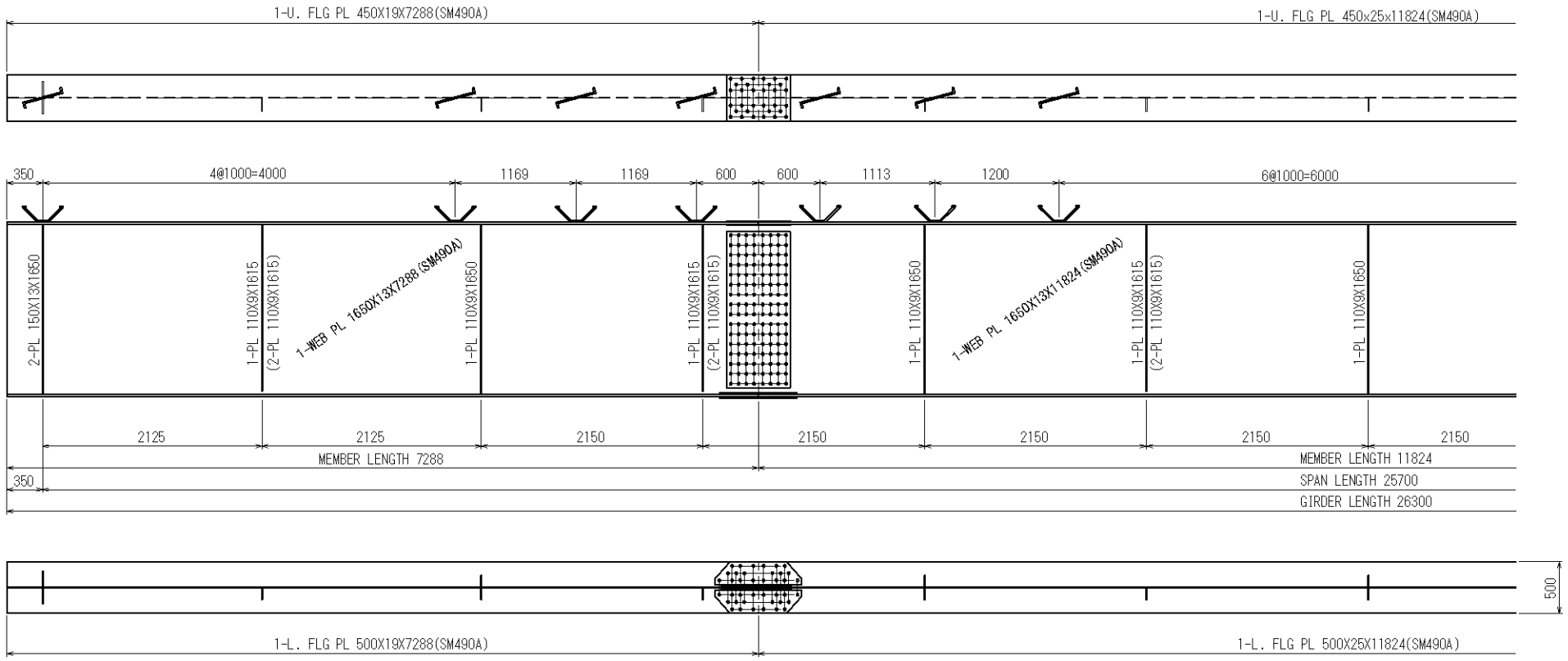

G3 GIRDER

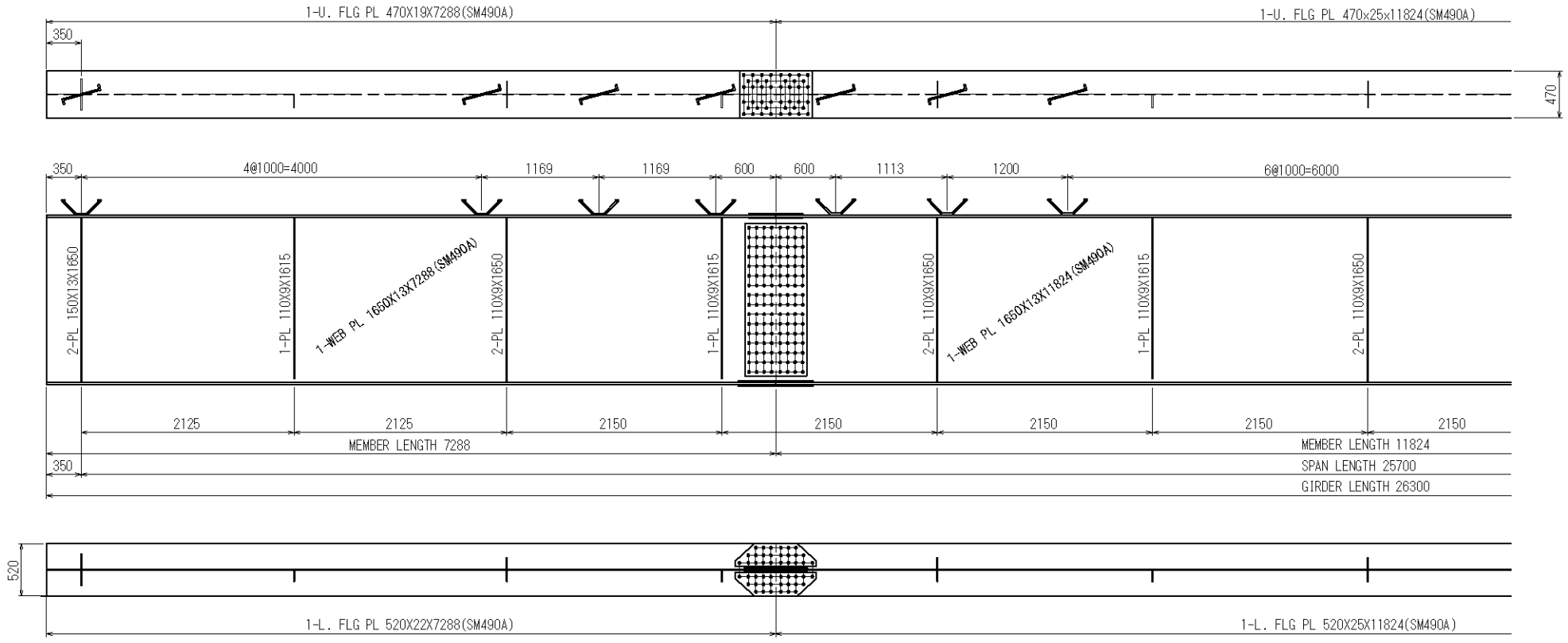

DETAIL OF FIELD JOINT SCALE 1:20

G1, G5(G2, G4)

G3

U. FLG

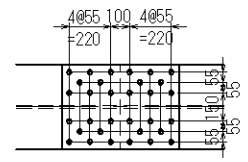

1-SPL PL 450X10X620(SM490A)
2-SPL PL 190X12X620(SM490A)
1-FILL PL 450X6X310(SS400)
32-TCB M22X85(S10T)

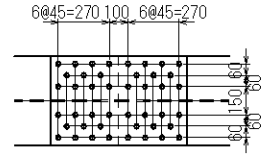

1-SPL PL 470X12X720(SM490A)
2-SPL PL 200X14X720(SM490A)
1-FILL PL 470X6X360(SS400)
44-TCB M22X90(S10T)

L. FLG

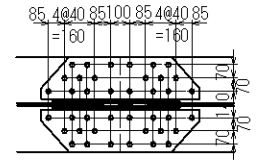

1-SPL PL 500X12X840(SM490A)
2-SPL PL 220X14X840(SM490A)
1-FILL PL 500X6X420(SS400)
40-TCB M22X90(S10T)

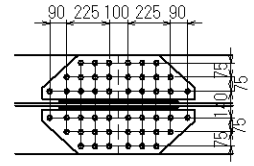

1-SPL PL 520X14X810(SM490A)
2-SPL PL 230X16X810(SM490A)
1-FILL PL 520X3.2X405(SS400)
48-TCB M22X90(S10T)

WEB

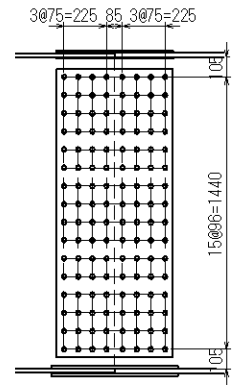

2-SPL PL 1520X9X615(SM490A)
128-TCB M22X70(S10T)

SLAB ANCHOR SCALE 1:10

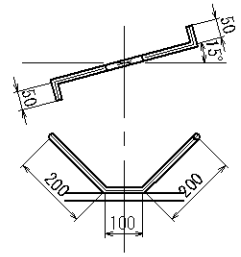

RB-Φ16X600(SS400)

MARKING DIAGRAM

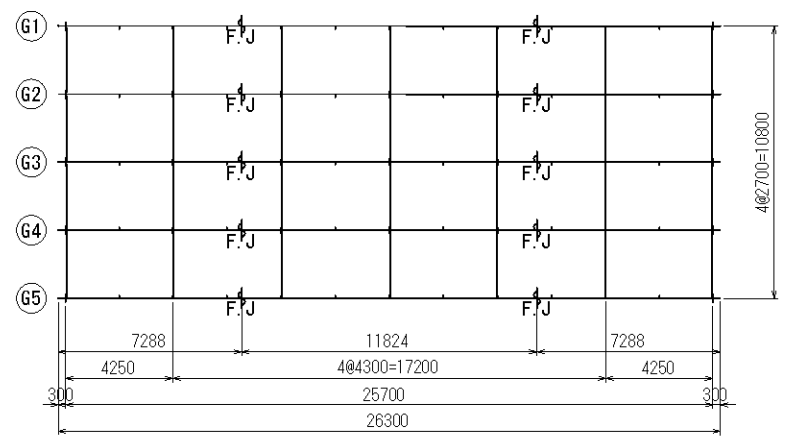

NOTE
1 UNLESS OTHERWISE SPECIFIED ALL MATERIALS SHALL BE SM400A .

KATAHIRA & ENGINEERS INTERNATIONAL Designed by : Date : Checked by : Date :	MINISTRY OF TRANSPORT OF THE REPUBLIC OF TAJIKISTAN Approved by : Date :	THE PROJECT FOR REHABILITATION OF KURGAN TYUBE - DUSTI ROAD (PHASE-2)	TITLE : MAIN GIRDER	SCALE : AS SHOWN	DRAWING No: BR2-03

TRANSVERSE MEMBERS AND LATERAL BRACING SCALE 1:30

SWAY BRACING

END SWAY S1 S2

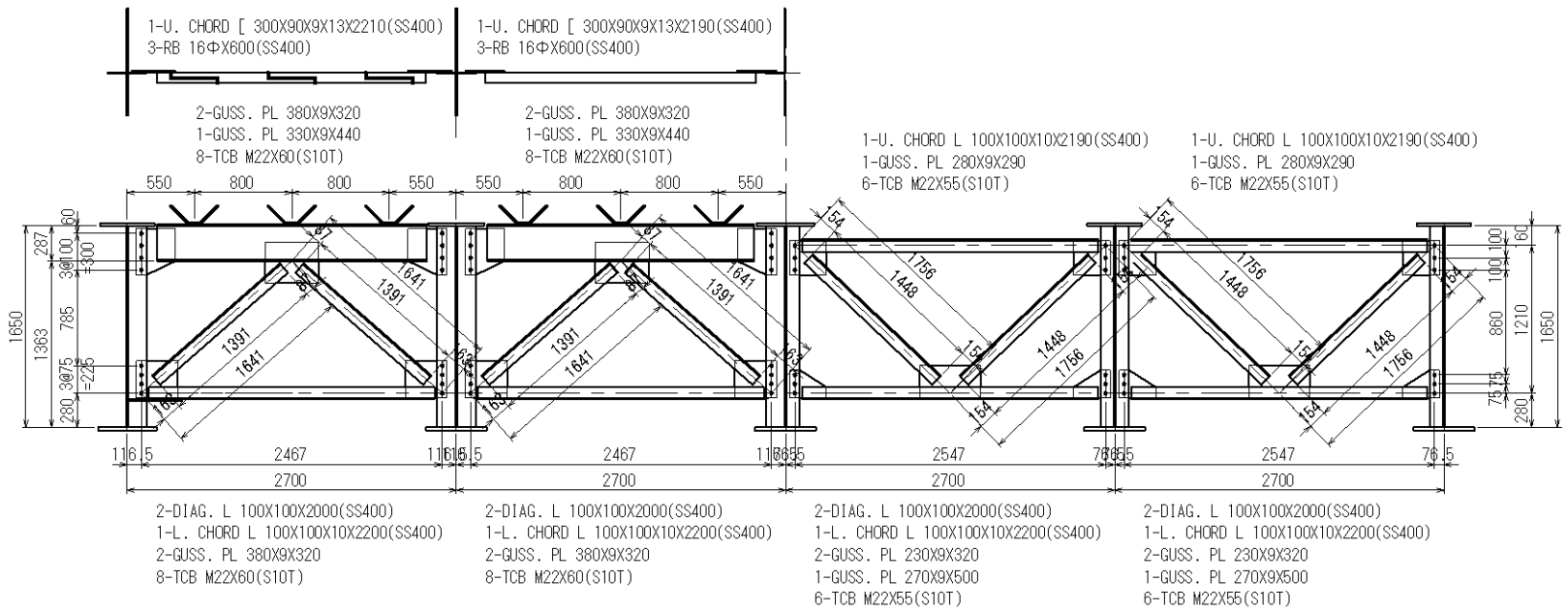

INTERMEDIATE SWAY C1 C2 C4 C5

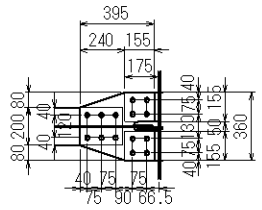

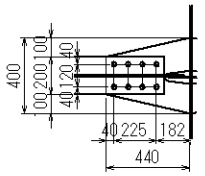

CROSS BEAM C3

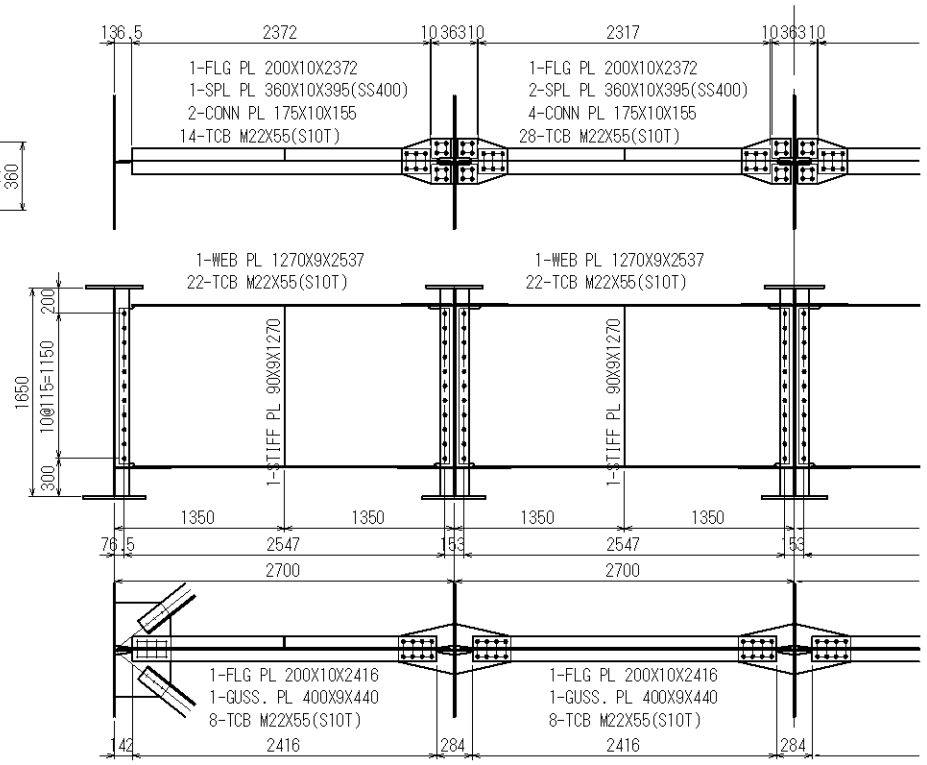

LOWER LATERAL BRACING

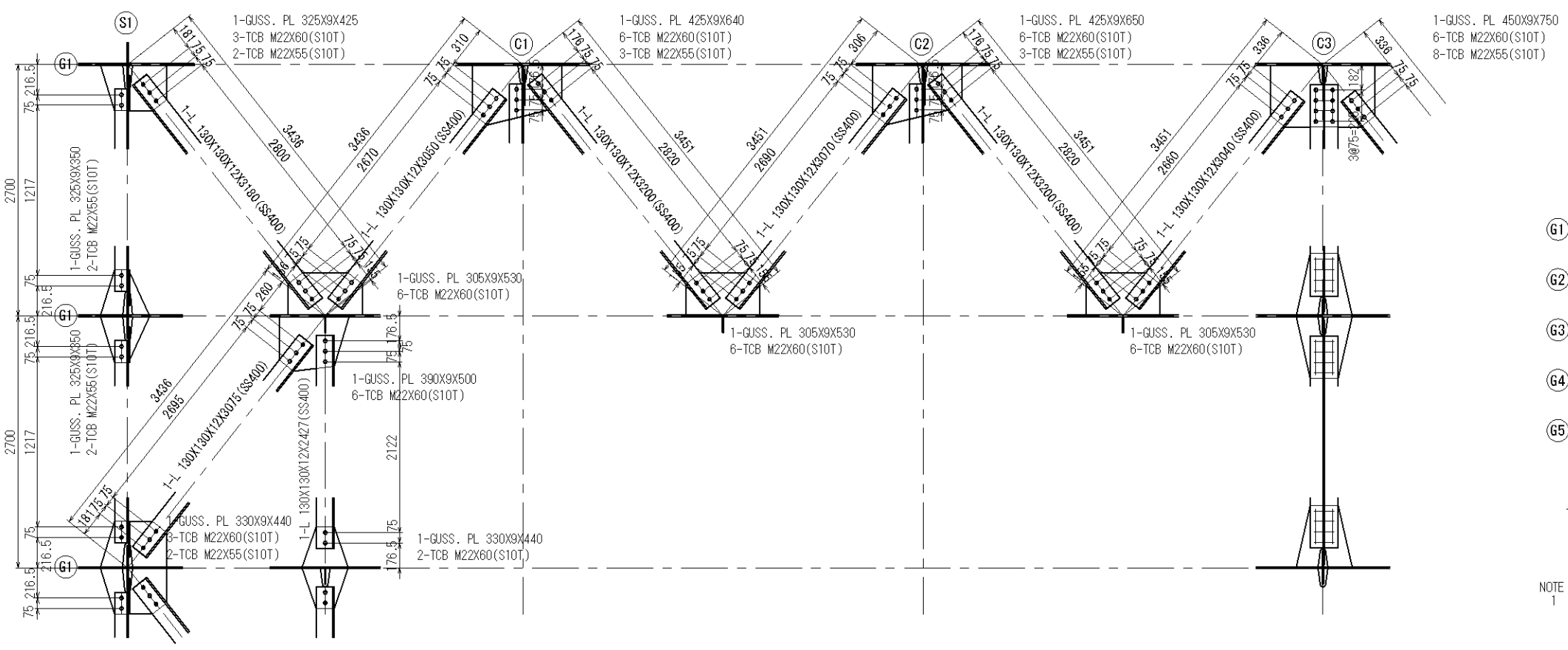

MARKING DIAGRAM

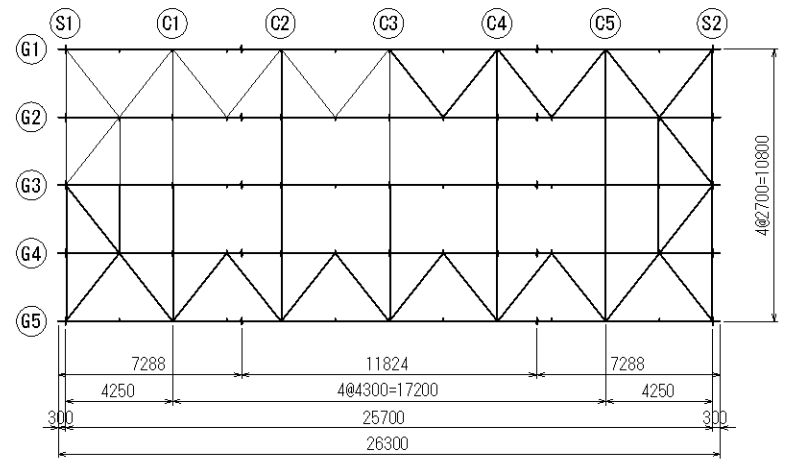

NOTE
1 UNLESS OTHERWISE SPECIFIED ALL MATERIALS SHALL BE SM400A .

KATAHIRA & ENGINEERS INTERNATIONAL Designed by : Date : Checked by : Date :	MINISTRY OF TRANSPORT OF THE REPUBLIC OF TAJIKISTAN Approved by : Date :	THE PROJECT FOR REHABILITATION OF KURGAN TYUBE - DUSTI ROAD (PHASE-2)	TITLE : TRANSVERSAL MEMBERS AND LATERAL BRACING	SCALE : AS SHOWN	DRAWING No: BR2-04	Rv.

BAR ARRANGEMENT OF RC SLAB

SCALE 1:40

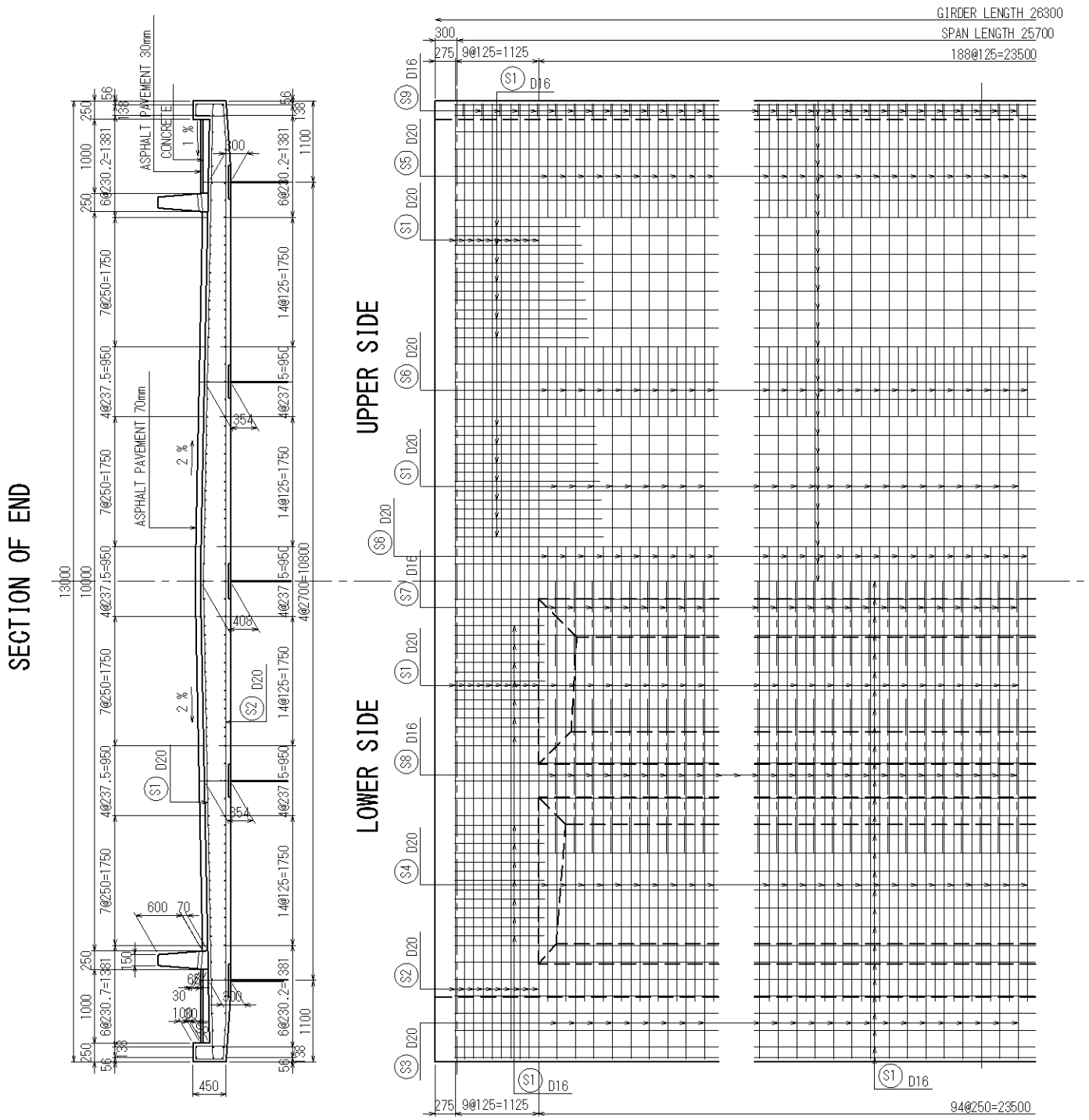

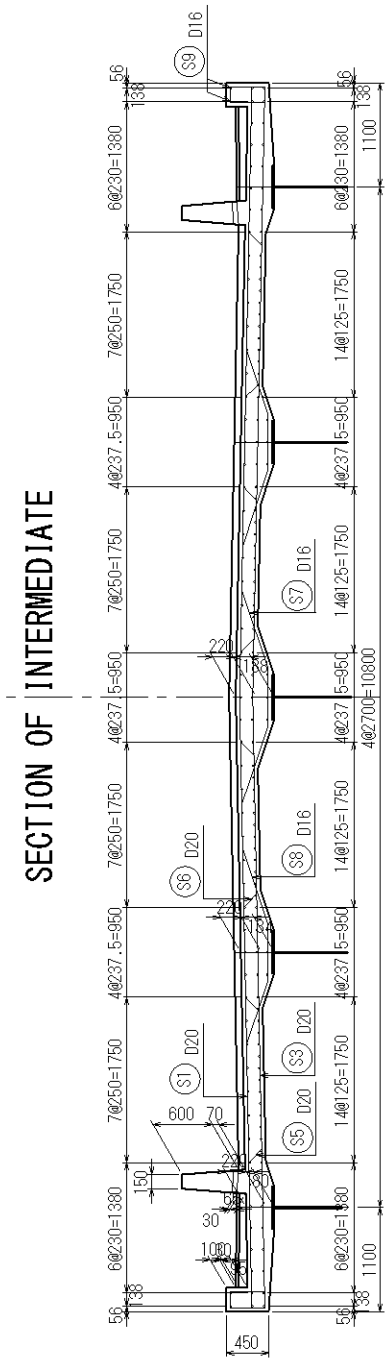

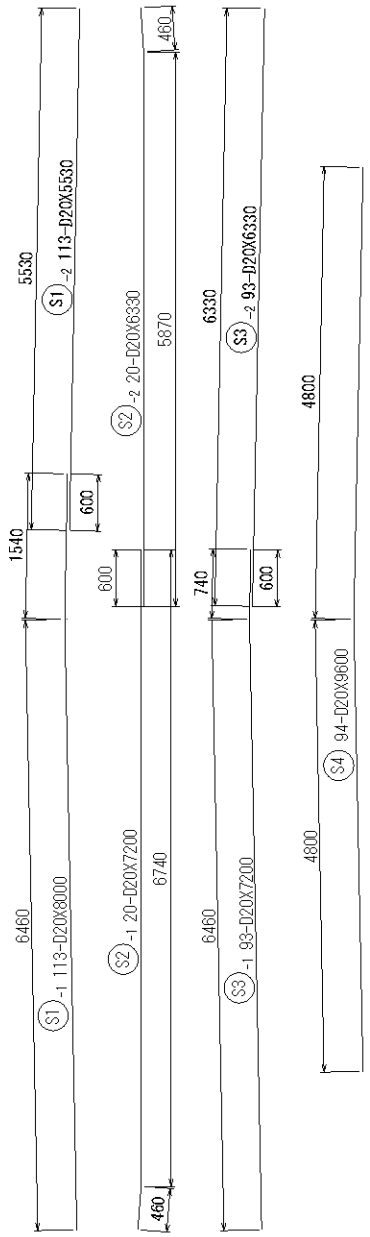

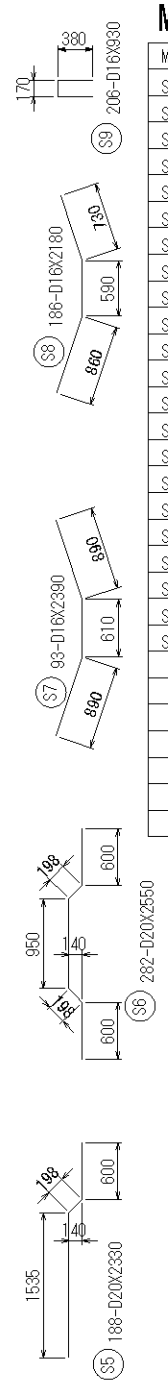

MATERIAL LIST

MARK	DIA.	LENGTH	NUMBER	W/M	W/PIECE	WEIGHT	REMARK
S 1-1	D20	8000	113	2.466	19.73	2229	
S 1-1	D20	5530	113	〃	13.64	1541	
S 2-1	D20	7800	20	〃	19.23	385	
S 2-2	D20	6330	20	〃	15.61	312	
S 3-1	D20	7200	93	〃	17.76	1652	
S 3-2	D20	6330	93	〃	15.61	1452	
S 4	D20	9600	94	〃	23.67	2225	
S 5	D20	2330	188	〃	5.75	1081	
S 6	D20	2550	282	〃	6.29	1774	
S 7	D16	2390	93	1.578	3.77	351	
S 8	D16	2180	186	〃	3.44	640	
S 9	D16	930	206	〃	1.47	303	
S 10-1	D16	8000	55	〃	12.62	745	
S 10-2	D16	10000	55	〃	15.78	931	
S 10-3	D16	7980	55	〃	12.59	931	
S 11-1	D16	8000	83	〃	12.62	1047	
S 11-2	D16	10000	83	〃	15.78	1310	
S 11-3	D16	6860	83	〃	10.83	899	
S 12	D16	1950	56	〃	3.08	172	
S 13	D16	2190	56	〃	3.46	194	
S 14	D16	820	129	〃	1.29	166	
S 14	D16	8680	18	〃	13.70	247	
						20399 kg	

BAR	D20	12651 kg
	D16	7748 kg
	TOTAL	20399 kg
CONCRETE		103.4 m³
FORM		390.7 m²

WALK WAY DRAINAGE SCALE 1:10

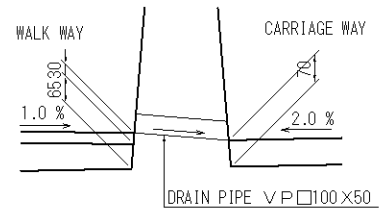

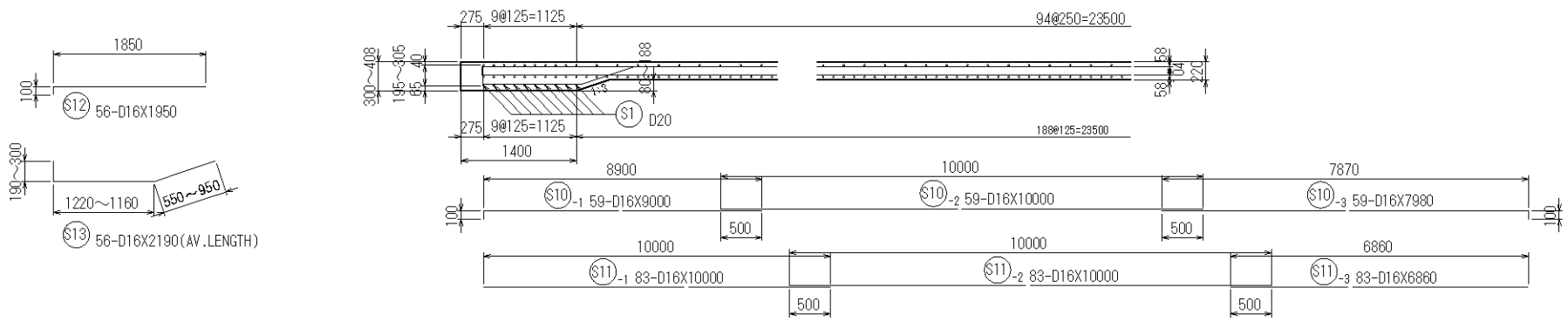

BARRIER

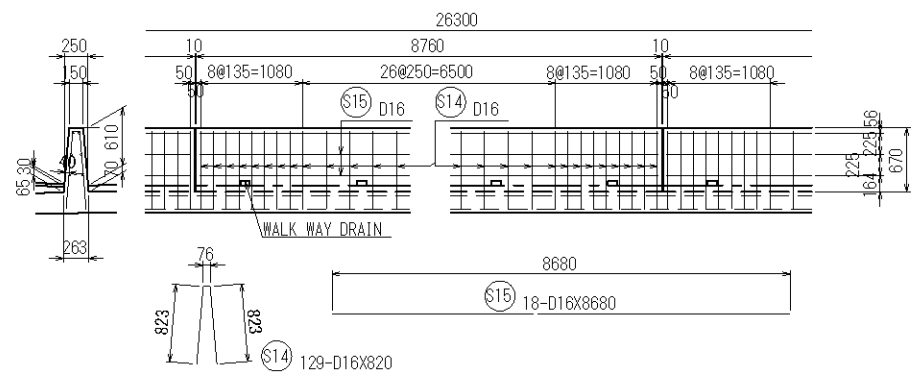

KATAHIRA & ENGINEERS INTERNATIONAL Designed by : Date : Checked by : Date :	MINISTRY OF TRANSPORT OF THE REPUBLIC OF TAJIKISTAN Approved by : Date :	THE PROJECT FOR REHABILITATION OF KURGAN TYUBE - DUSTI ROAD (PHASE-2)	TITLE : BAR ARRANGEMENT OF RC SLAB	SCALE : AS SHOWN	DRAWING No: BR2-05

EXPANSION JOINT AND ANNEXED STRUCTURES S=1:20

EJ 2

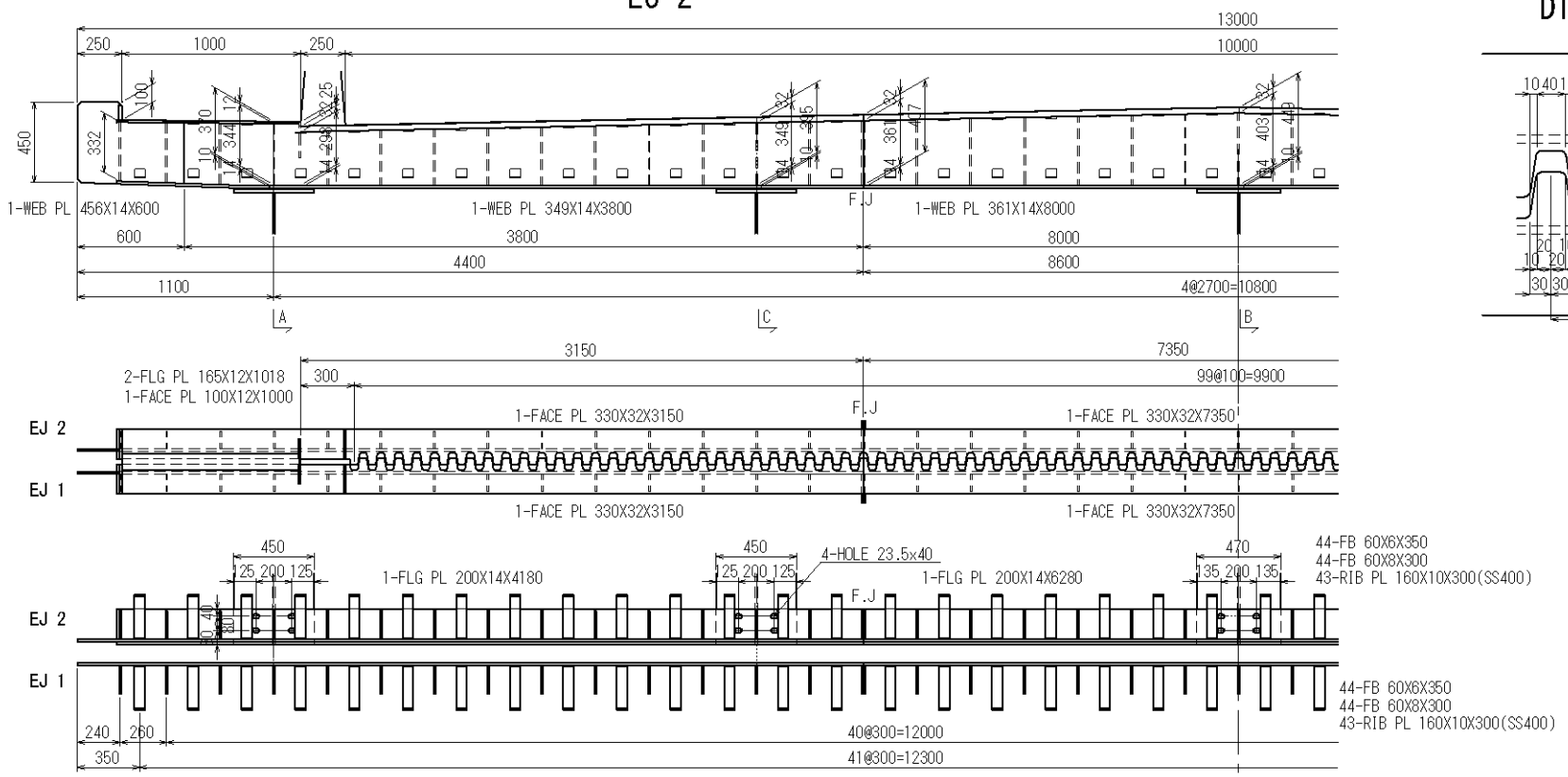

EJ 1

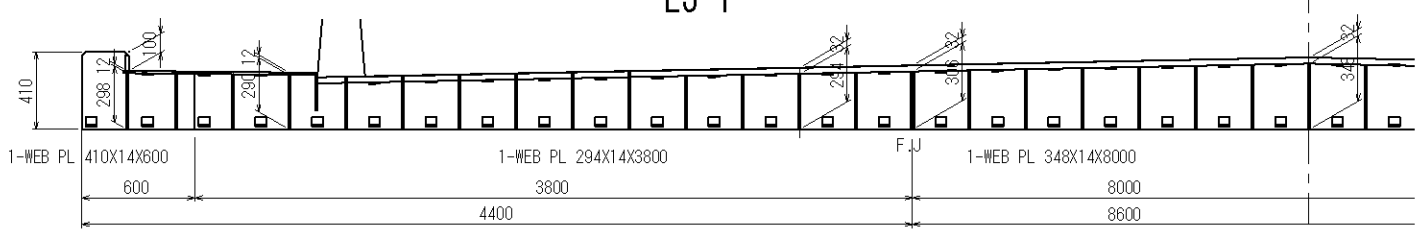

DTAIL OF FINGER S=1:5

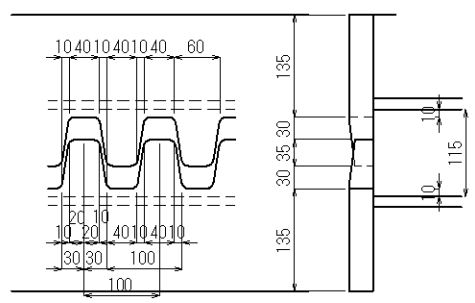

C-C S=1:10

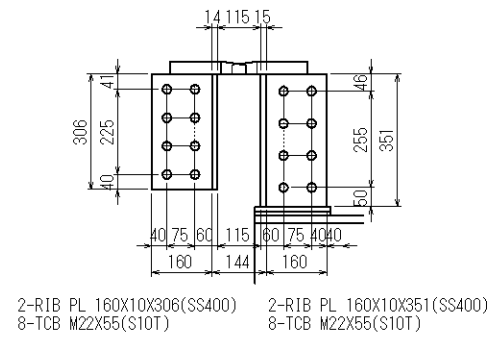

A-A S=1:10

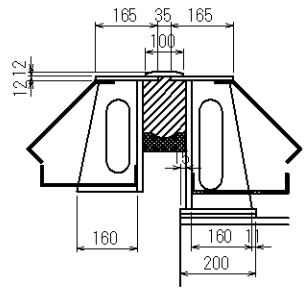

B-B S=1:10

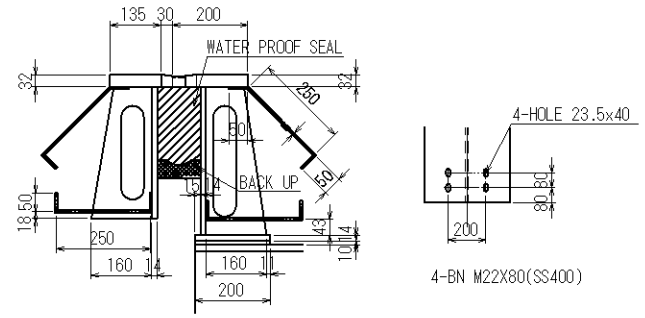

RAILING S=1:20

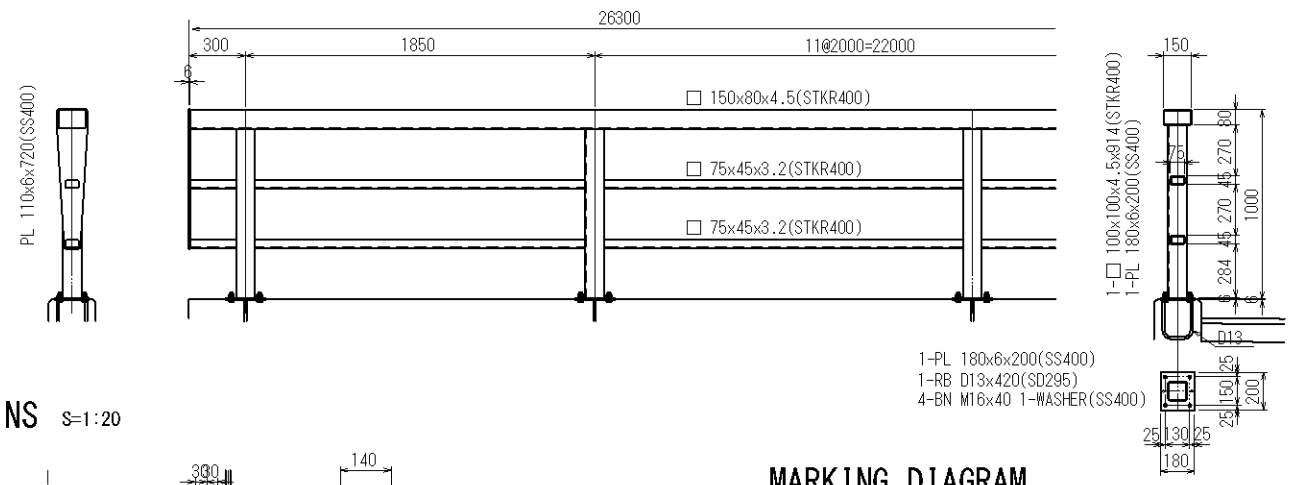

BP-B SHOE S=1:10

MOV.

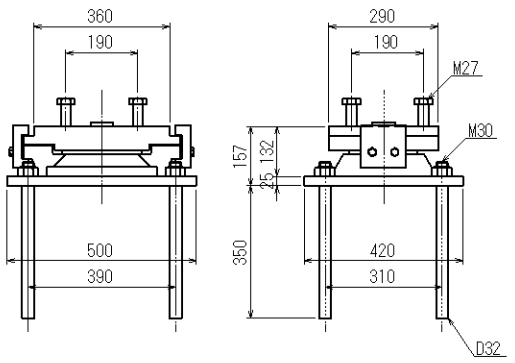

FIX.

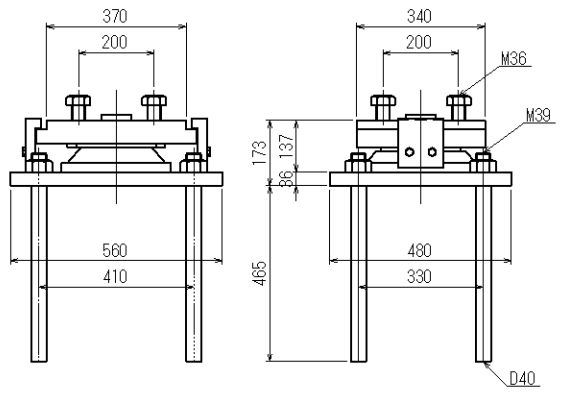

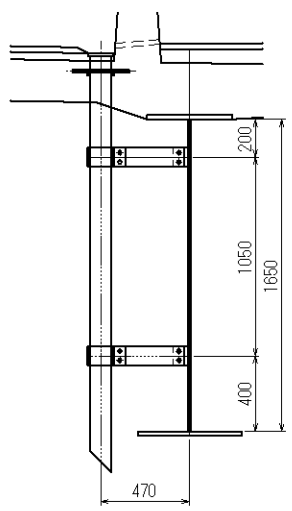

DRAINS S=1:20

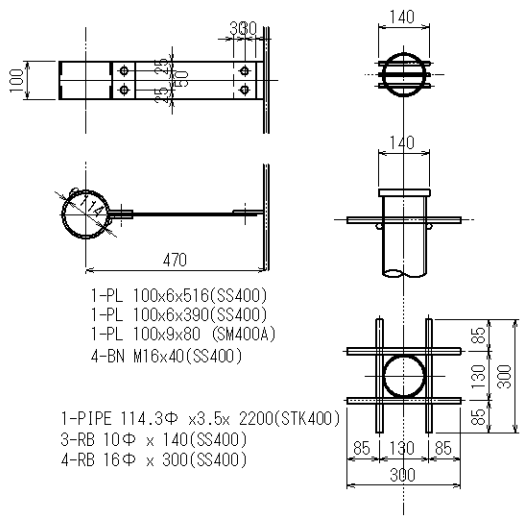

MARKING DIAGRAM

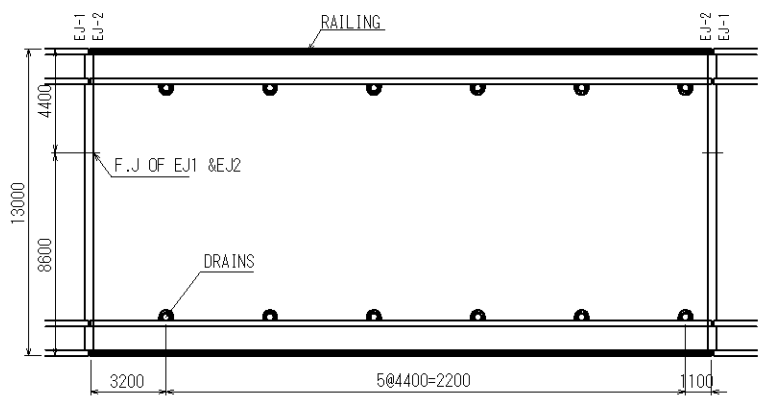

KATAHIRA & ENGINEERS INTERNATIONAL Designed by : Date : Checked by : Date :	MINISTRY OF TRANSPORT OF THE REPUBLIC OF TAJIKISTAN Approved by : Date :	THE PROJECT FOR REHABILITATION OF KURGAN TYUBE - DUSTI ROAD (PHASE-2)	TITLE : EXPANSION JOINT AND OTHER ANNEXED STRUCTURES	SCALE : AS SHOWN	DRAWING No: BR2-06

STRUCTURAL DRAWING OF A1 ABUTMENT SCALE 1:100

1 - 1

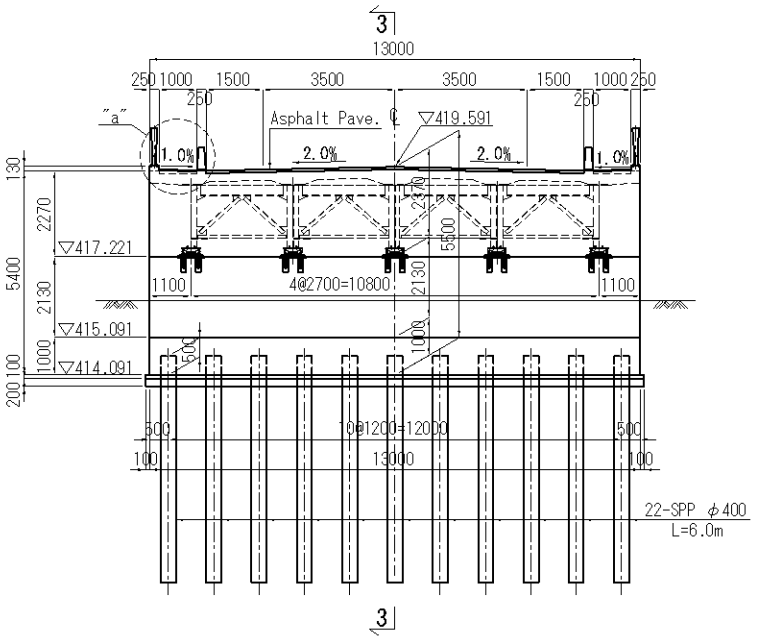

2 - 2

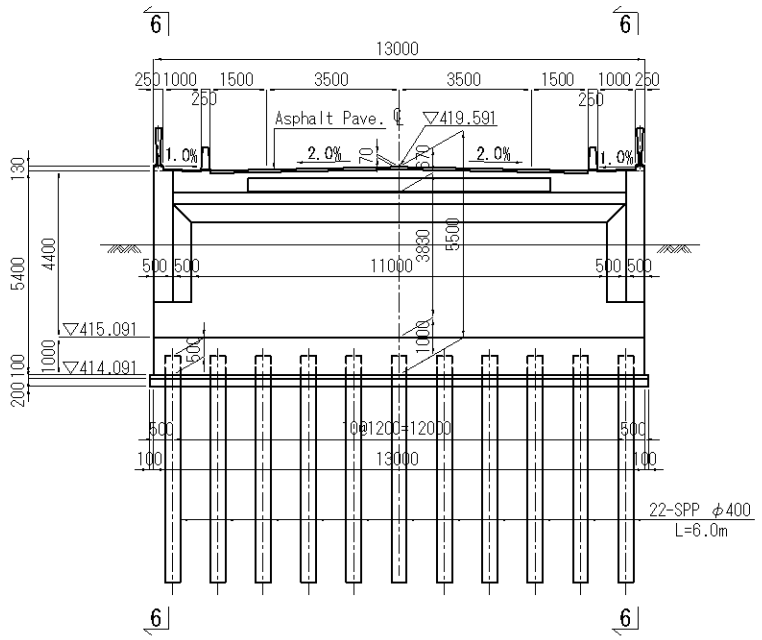

3 - 3

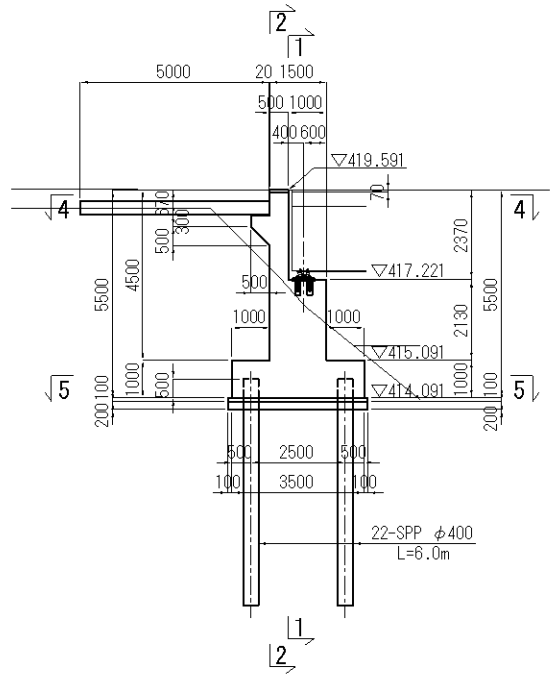

6 - 6

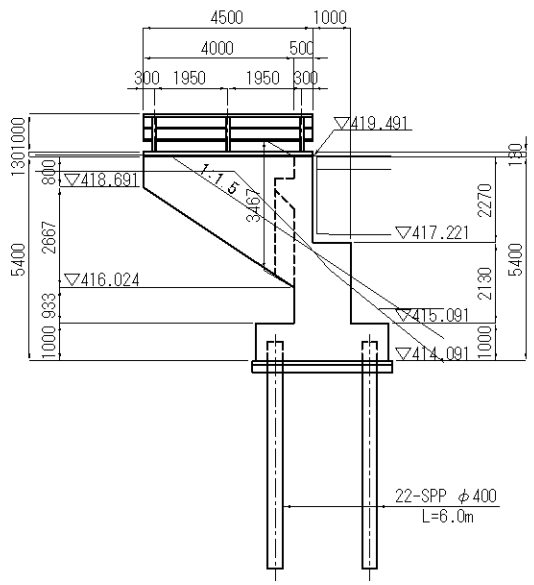

4 - 4

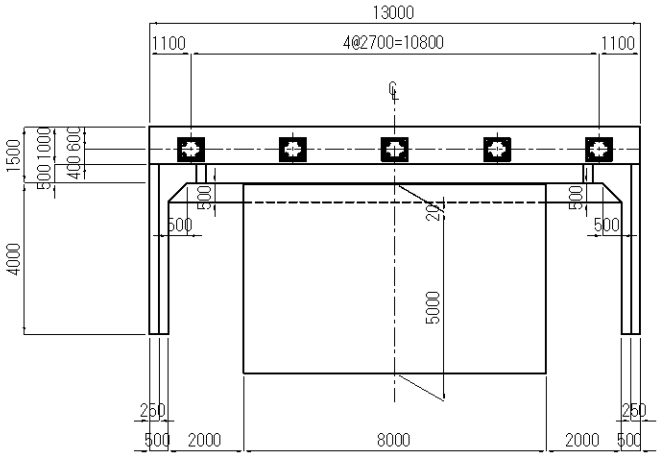

5 - 5

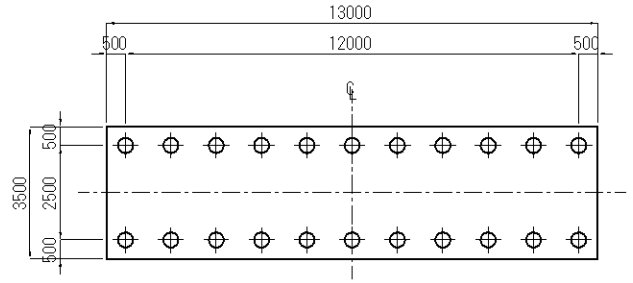

DETAIL SCALE 1:20

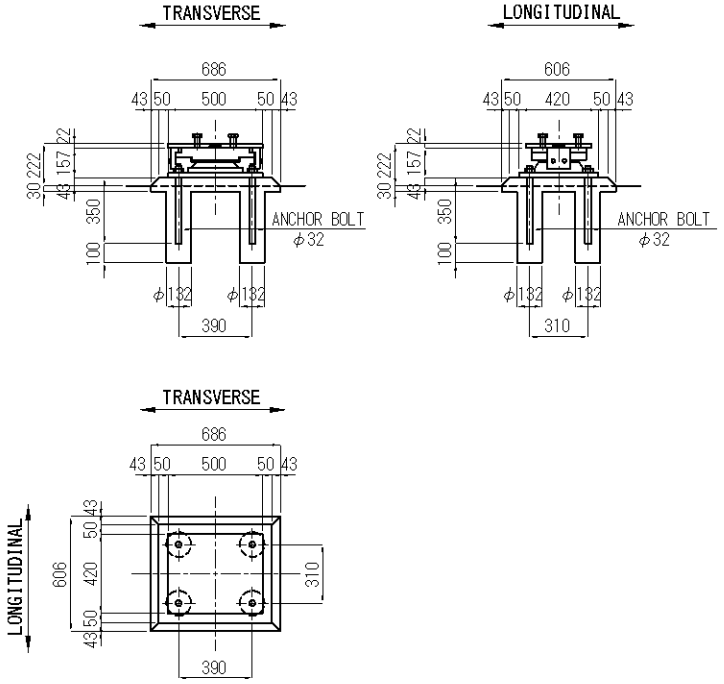

DETAIL SCALE 1:30

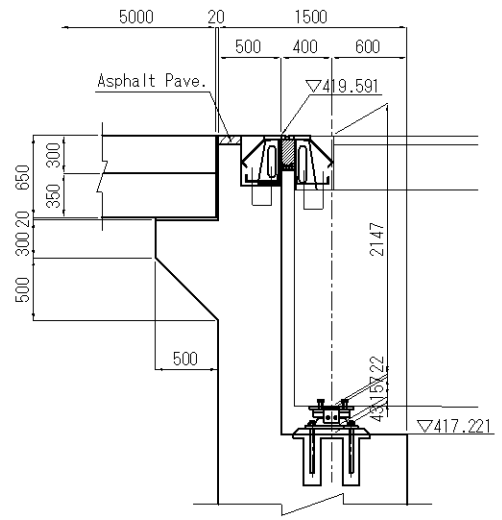

DETAIL "a" SCALE 1:30

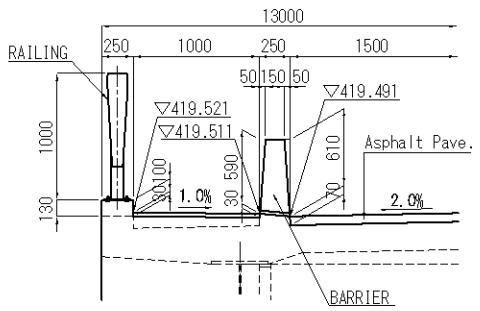

A6-28

KATAHIRA & ENGINEERS INTERNATIONAL Designed by : Date : Checked by : Date :	MINISTRY OF TRANSPORT OF THE REPUBLIC OF TAJIKISTAN Approved by : Date :	THE PROJECT FOR REHABILITATION OF KURGAN TYUBE - DUSTI ROAD (PHASE-2)	TITLE : STRUCTURAL DRAWING OF A1 ABUTMENT	SCALE : AS SHOWN	DRAWING No: BR2-07

STRUCTURAL DRAWING OF A2 ABUTMENT SCALE 1:100

1 - 1

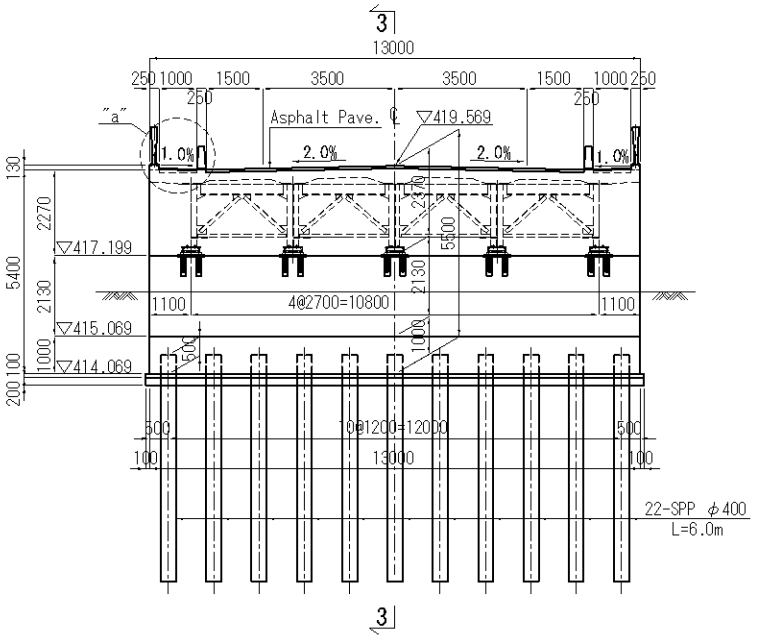

2 - 2

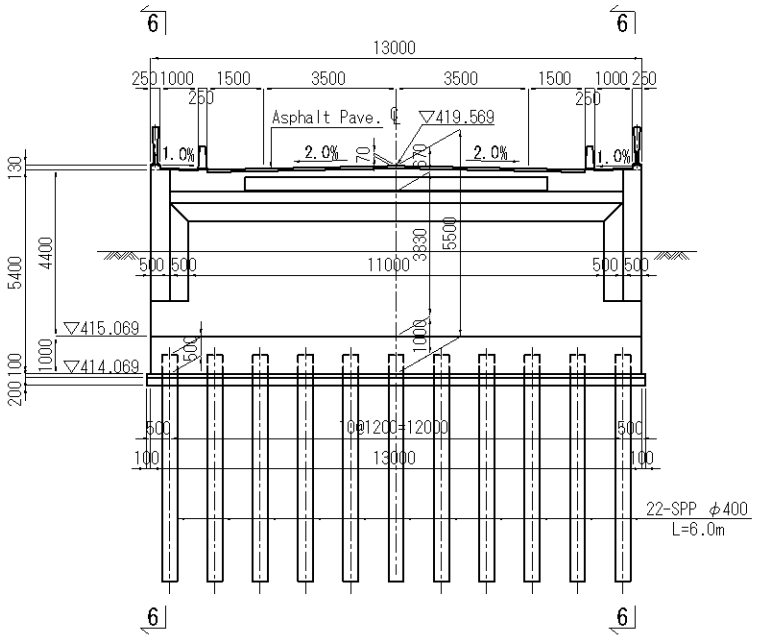

3 - 3

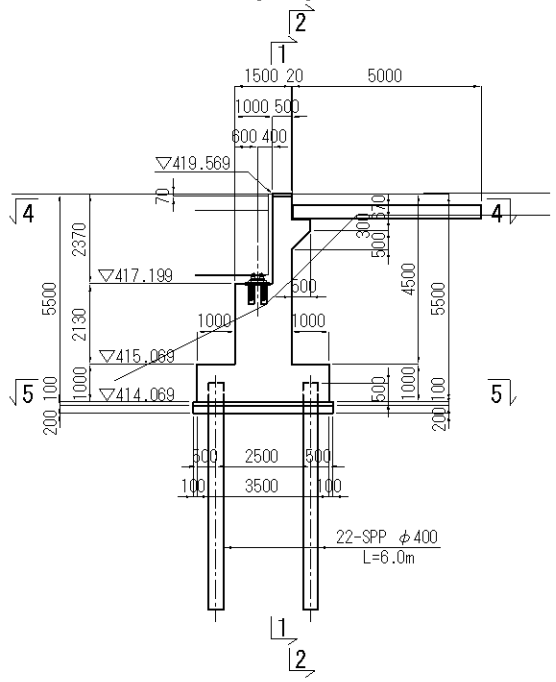

6 - 6

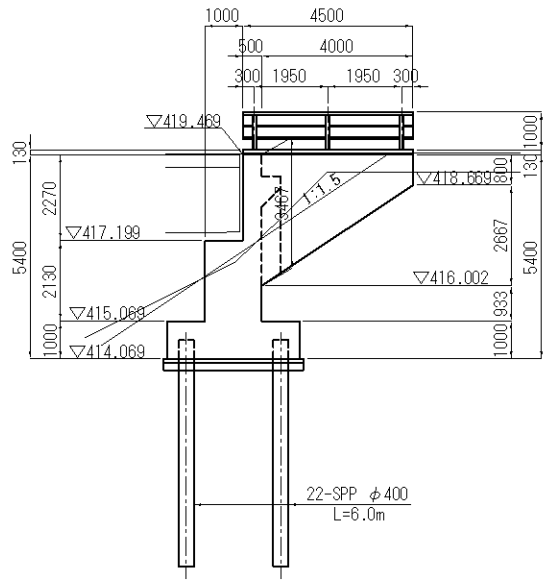

4 - 4

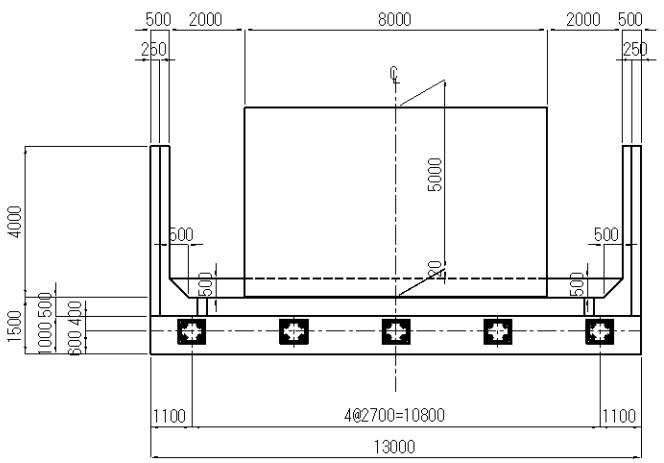

5 - 5

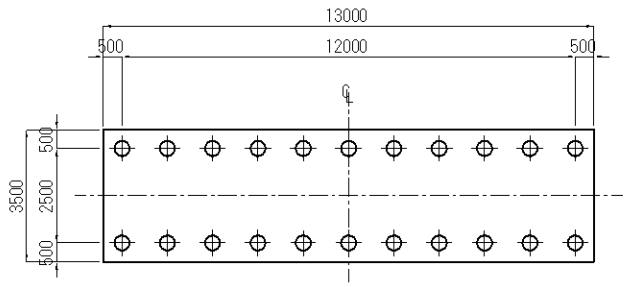

DETAIL SCALE 1:20

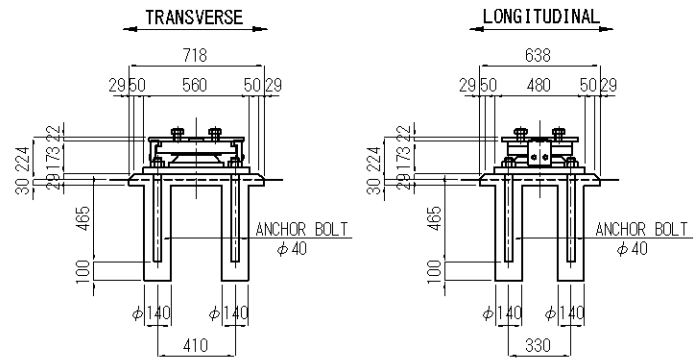

DETAIL SCALE 1:30

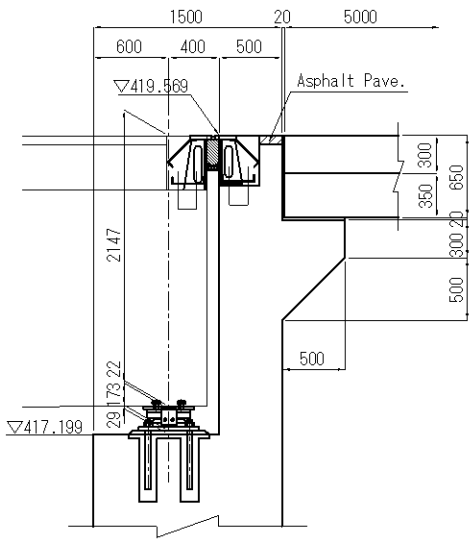

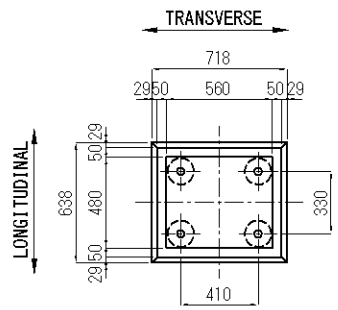

DETAIL "a" SCALE 1:30

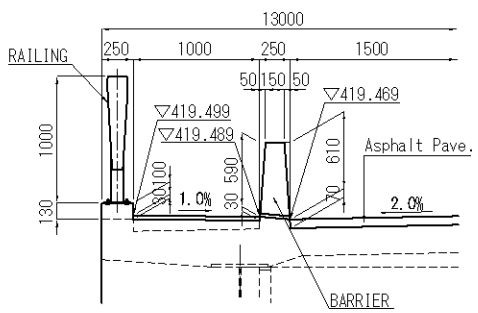

A6-29

KATAHIRA & ENGINEERS INTERNATIONAL Designed by : Date : Checked by : Date :	MINISTRY OF TRANSPORT OF THE REPUBLIC OF TAJIKISTAN Approved by : Date :	THE PROJECT FOR REHABILITATION OF KURGAN TYUBE - DUSTI ROAD (PHASE-2)	TITLE : STRUCTURAL DRAWING OF A2 ABUTMENT	SCALE : AS SHOWN	DRAWING No: BR2-08

BAR ARRANGEMENT OF A1, A2 ABUTMENT(1) SCALE 1:50

ELEVATION

1 - 1

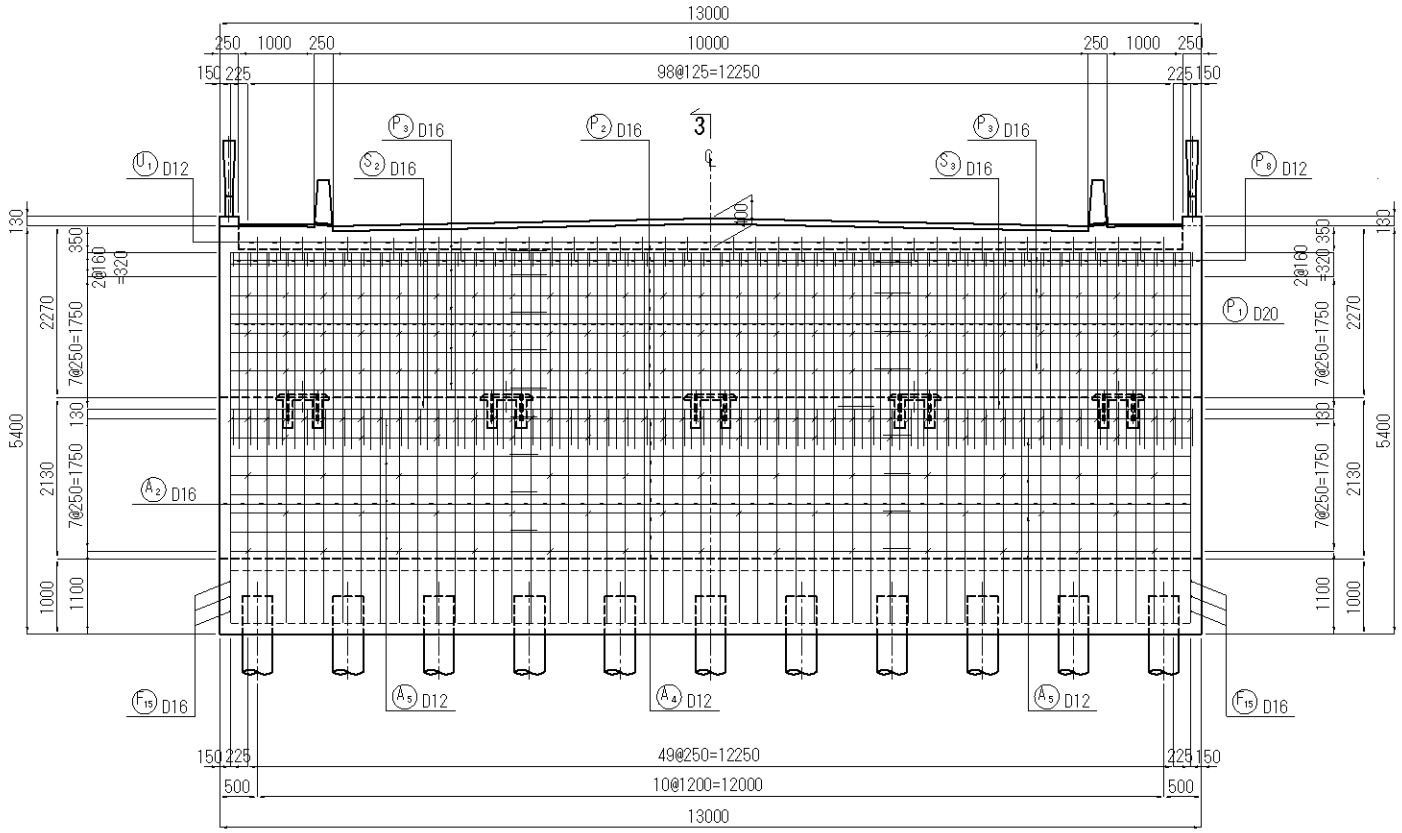

2 - 2

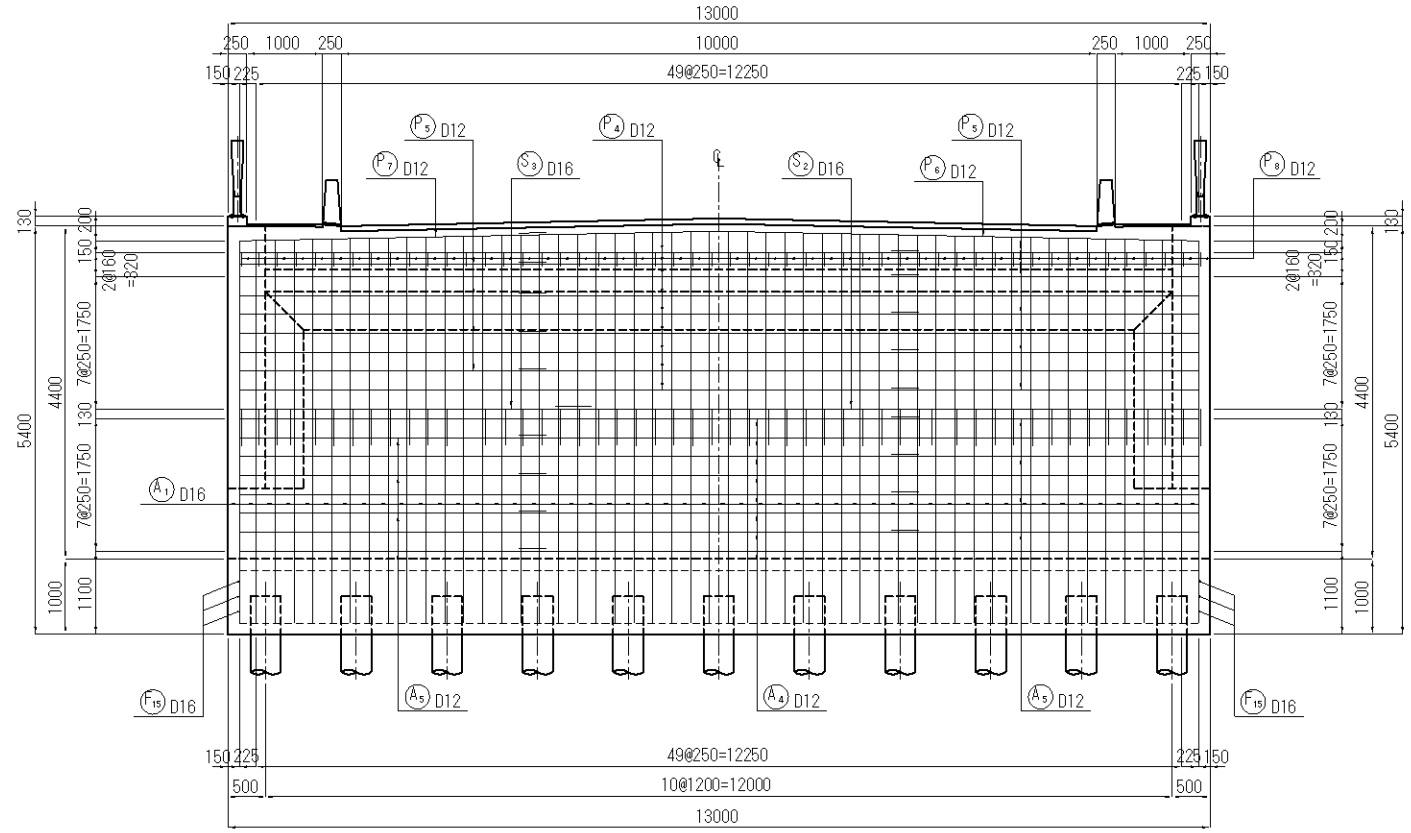

PLAN

4 - 4

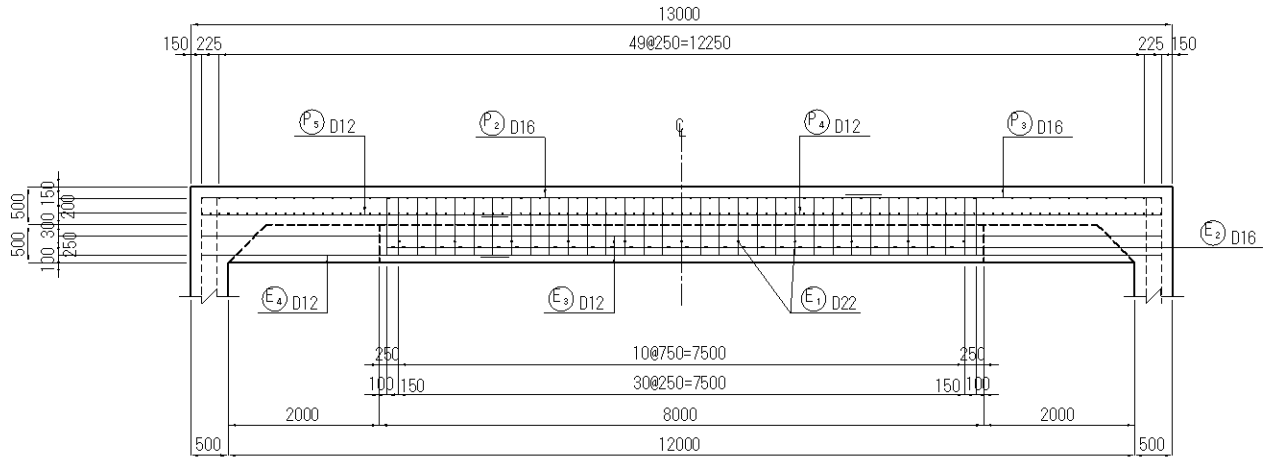

5 - 5

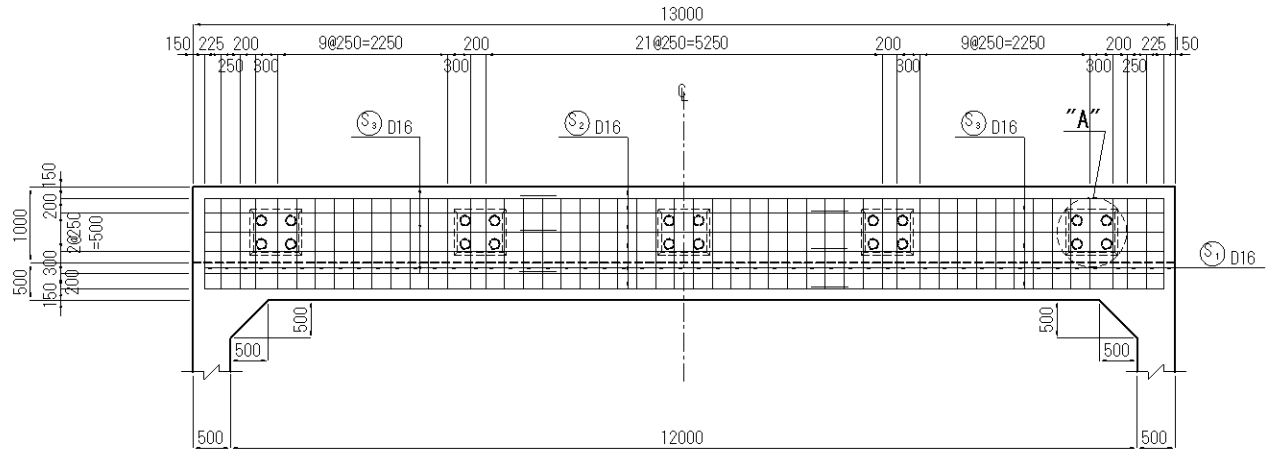

KATAHIRA & ENGINEERS INTERNATIONAL Designed by : Date : Checked by : Date :	MINISTRY OF TRANSPORT OF THE REPUBLIC OF TAJIKISTAN Approved by : Date :	THE PROJECT FOR REHABILITATION OF KURGAN TYUBE - DUSTI ROAD (PHASE-2)	TITLE : BAR ARRANGEMENT OF A1,A2 ABUTMENT (1)	SCALE : AS SHOWN	DRAWING No: BR2-09

BAR ARRANGEMENT OF A1, A2 ABUTMENT (2) SCALE 1:50

SECTION
3 - 3

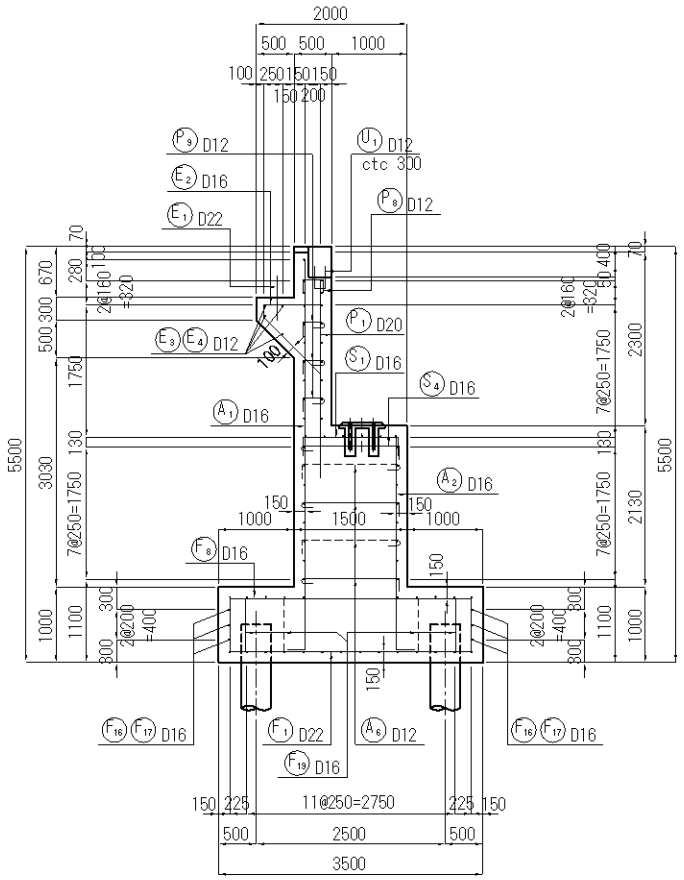

6 - 6

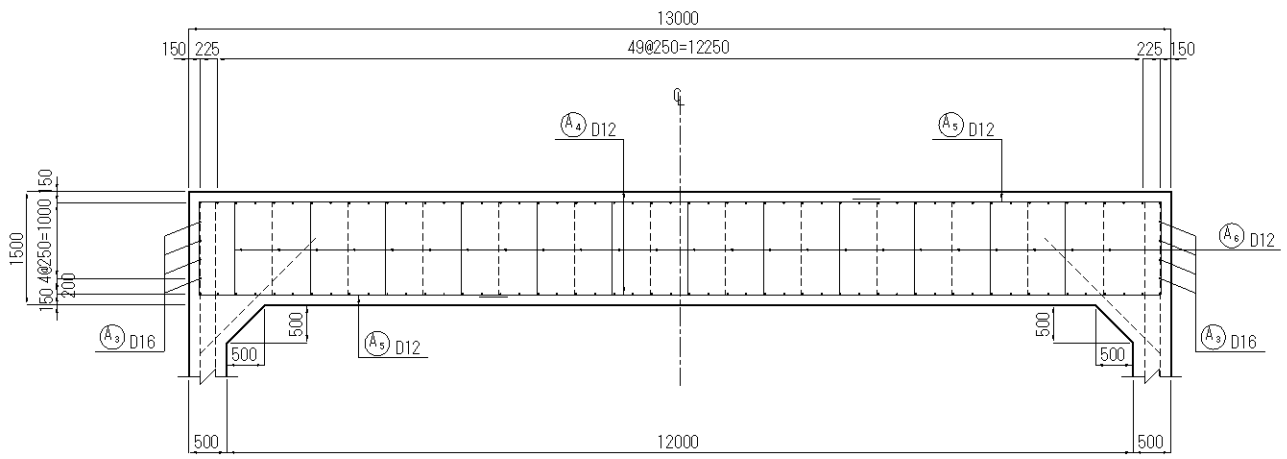

DETAIL "A" SCALE 1:30
(N=5)

(A1 SIDE)

TRANSVERSE

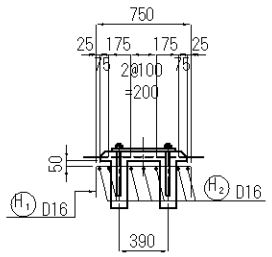

LONGITUDINAL

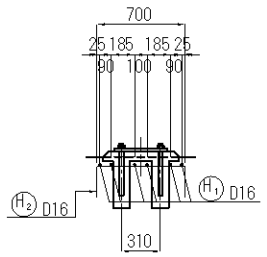

TRANSVERSE

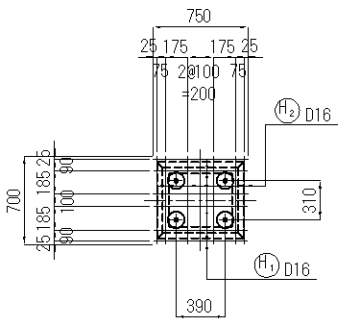

LONGITUDINAL

(A2 SIDE)

TRANSVERSE

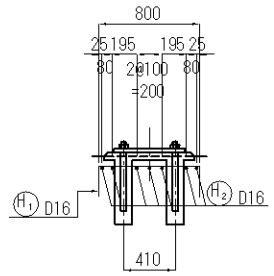

LONGITUDINAL

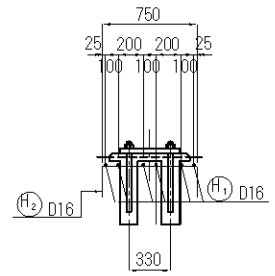

TRANSVERSE

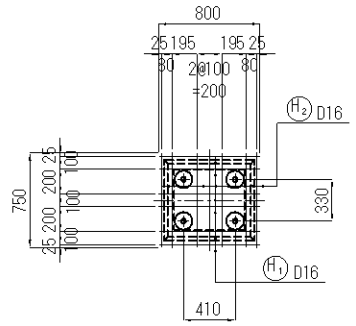

LONGITUDINAL

DETAIL SCALE=1:20
(PARAPET)

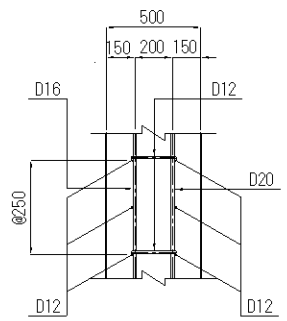

MARKING

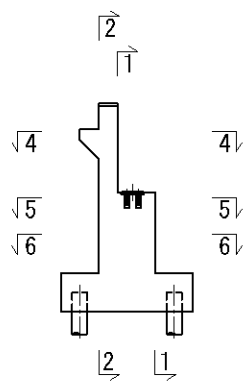

DETAIL SCALE=1:20
(BODY)

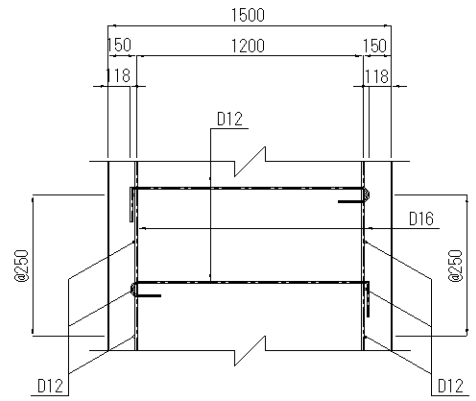

DETAIL SCALE=1:20
(FOOTING)

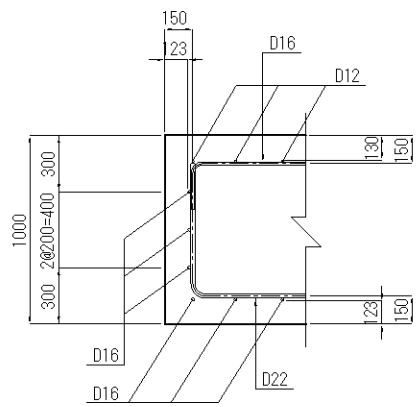

KATAHIRA & ENGINEERS INTERNATIONAL Designed by : Date : Checked by : Date :	MINISTRY OF TRANSPORT OF THE REPUBLIC OF TAJIKISTAN Approved by : Date :	THE PROJECT FOR REHABILITATION OF KURGAN TYUBE - DUSTI ROAD (PHASE-2)	TITLE : BAR ARRANGEMENT OF A1,A2 ABUTMENT (2)	SCALE : AS SHOWN	DRAWING No: BR2-10

BAR ARRANGEMENT OF A1, A2 ABUTMENT(3) SCALE 1:50

ELEVATION

9 - 9

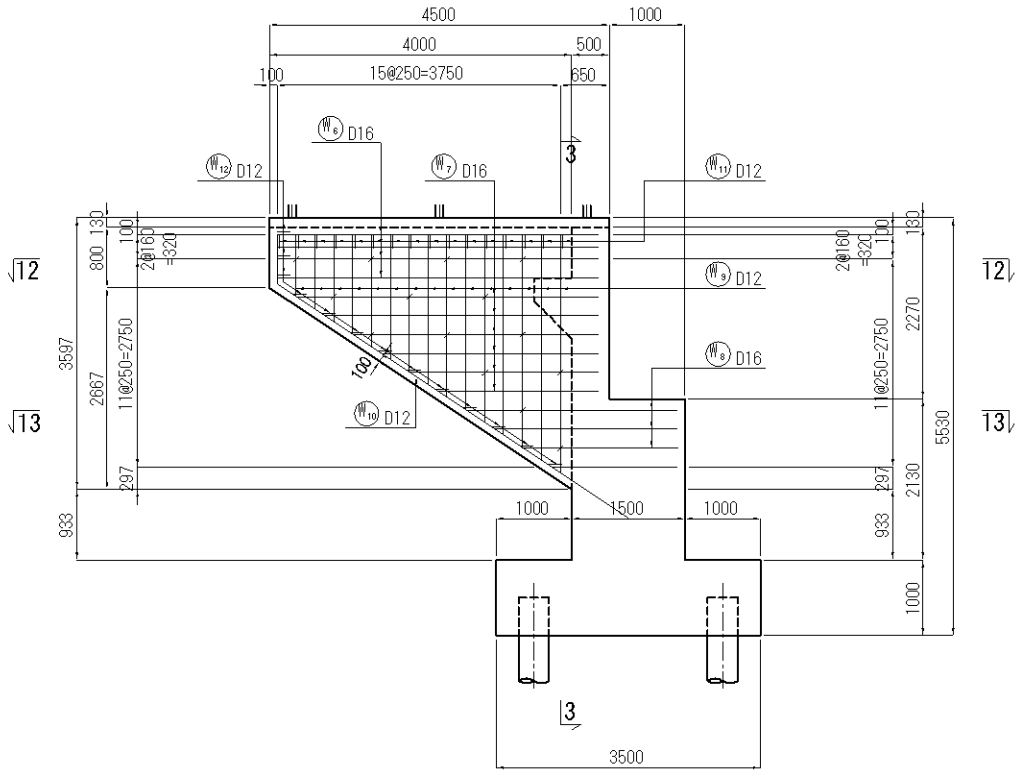

10 - 10

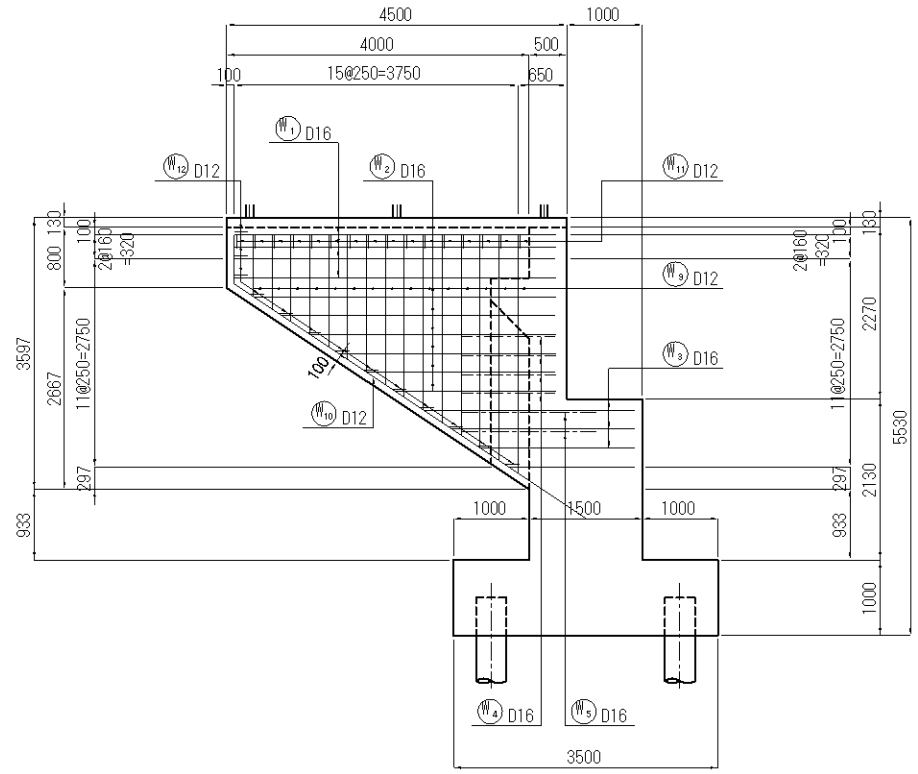

11 - 11

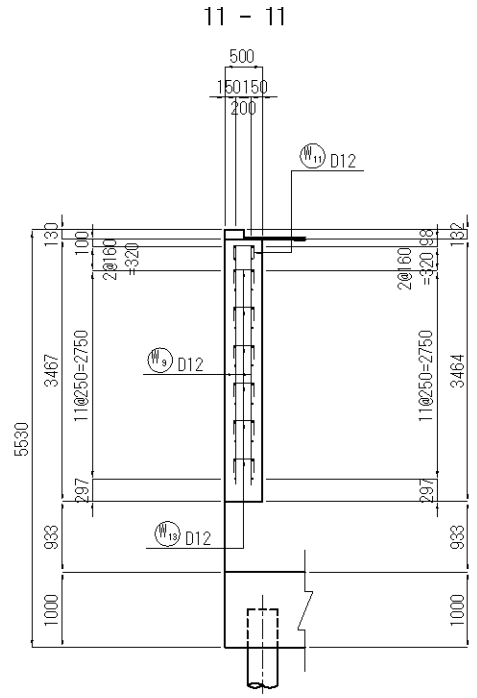

12 - 12

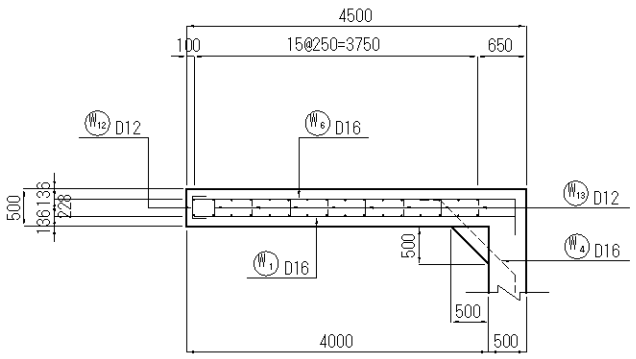

DETAIL SCALE=1:20

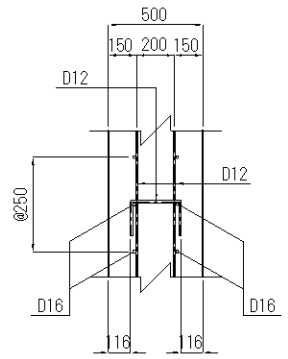

13 - 13

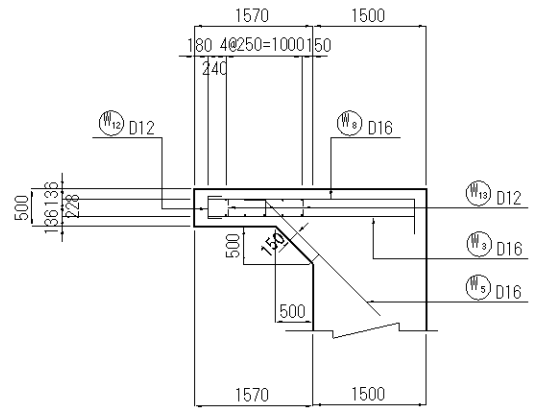

MARKING

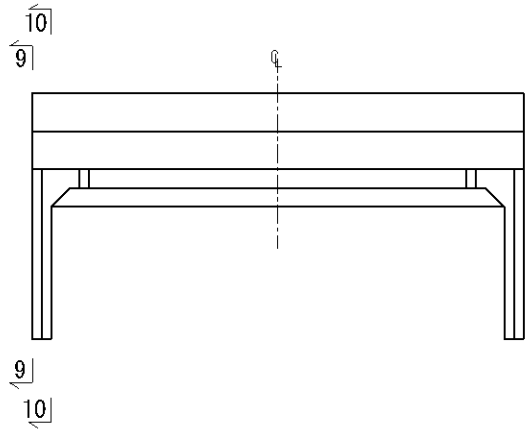

KATAHIRA & ENGINEERS INTERNATIONAL Designed by : Date : Checked by : Date :	MINISTRY OF TRANSPORT OF THE REPUBLIC OF TAJIKISTAN Approved by : Date :	THE PROJECT FOR REHABILITATION OF KURGAN TYUBE - DUSTI ROAD (PHASE-2)	TITLE : BAR ARRANGEMENT OF A1,A2 ABUTMENT (3)	SCALE : AS SHOWN	DRAWING No: BR2-11

BAR ARRANGEMENT OF A1, A2 ABUTMENT(4) SCALE 1:50

ELEVATION

PLAN

7 - 7

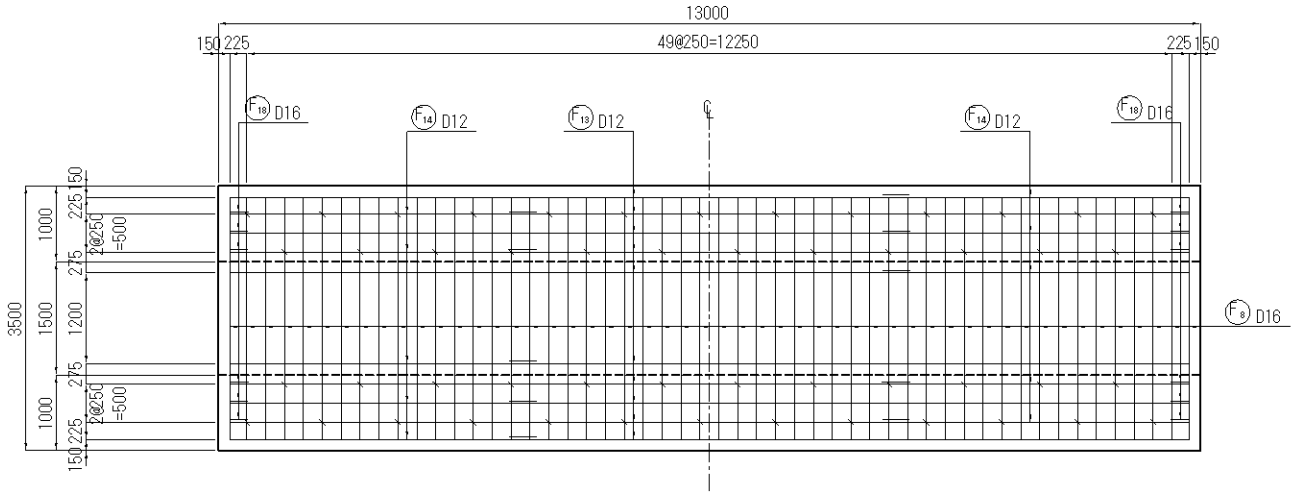

8 - 8

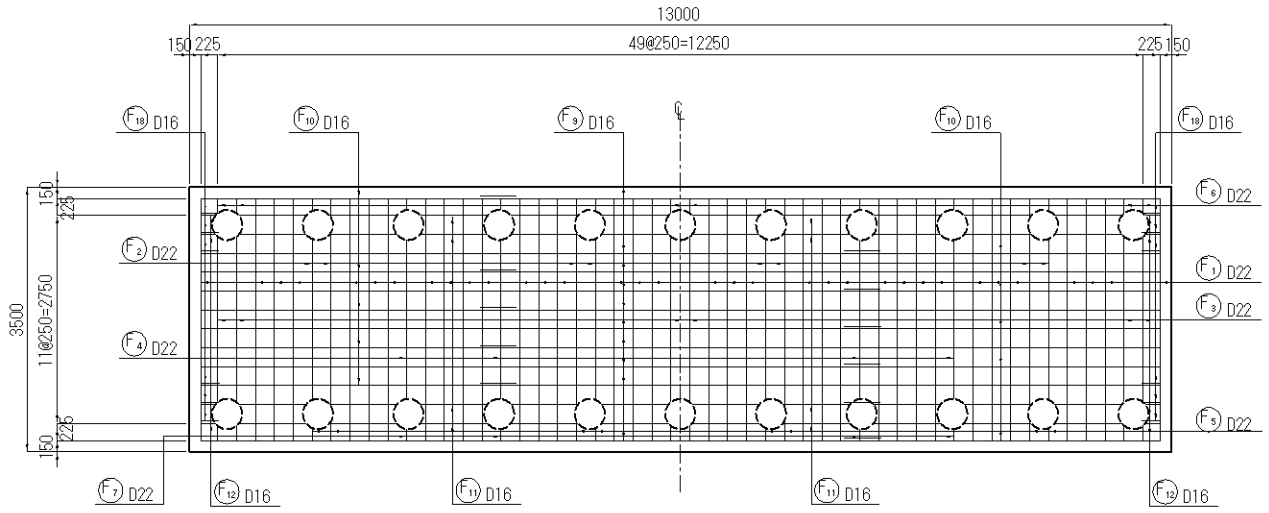

GENERAL ARRANGEMENT OF PILES SCALE 1:20

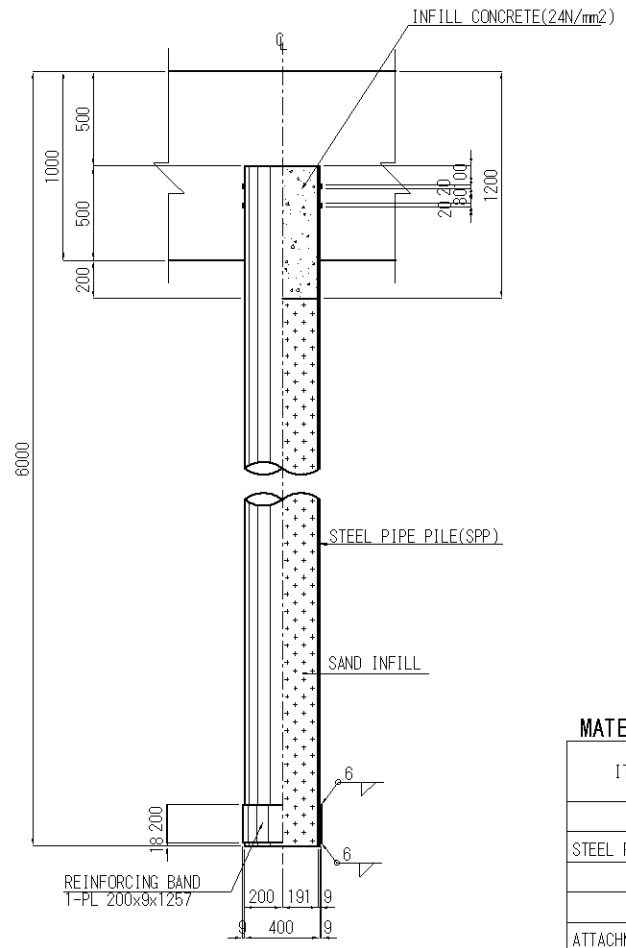

DETAIL OF TOP PILE SCALE 1:10

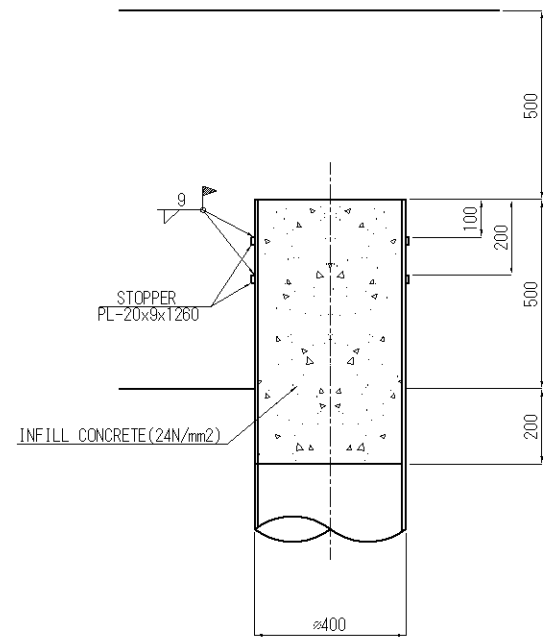

MATERIAL LIST

ITEM	MARK	MATERIAL	SIZE	LENGTH (mm)	QUANTITY (No)	UNIT WT. (kg/m)	WT/PC. (kg)	WEIGHT (kg)	REMARKS
STEEL PIPE PILE	SPP	SKK400	φ400x9	6000	22	86.8	521	11462	
SUBTOTAL = 11462 kg									
ATTACHMENT PARTS PER ONE PILE									
STOPPER	PL	SS400	20 x 9	1260	2	1.41	1.78	4	
REINFORCING BAND	PL	SS400	200 x 9	1257	1	14.1	17.72	18	
SUBTOTAL = 22 kg									
TOTAL 22 x 22 = 484 kg									
TOTAL 11462 kg + 484 kg = 11946 kg									

MARKING

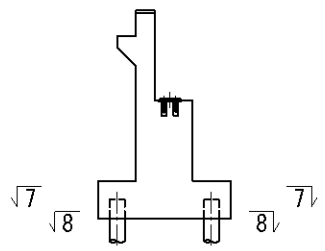

A6-33

KATAHIRA & ENGINEERS INTERNATIONAL

Designed by : Date :

Checked by : Date :

MINISTRY OF TRANSPORT OF THE REPUBLIC OF TAJIKISTAN

Approved by : Date :

THE PROJECT FOR REHABILITATION OF KURGAN TYUBE - DUSTI ROAD (PHASE-2)

TITLE : BAR ARRANGEMENT OF A1,A2 ABUTMENT (4)

SCALE : AS SHOWN

DRAWING No: BR2-12

Rv.

BAR ARRANGEMENT OF A1, A2 ABUTMENT (5) SCALE 1:50

BAR BENDING DIAGRAM

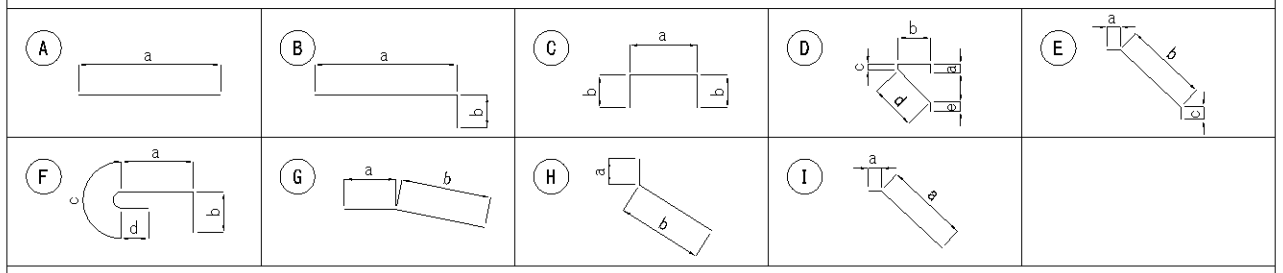

SCHEDULE OF REINFORCEMENT

LOCATION	BAR MARK	BAR SIZE	SPACING ctc(mm)	BAR SHAPE	DIMENSIONS (mm) OUT TO OUT a	b	c	d	e	LENGTH (mm)	NO. OF BARS	UNIT WT. (kg/m)	WEIGHT (kg)	REMARKS
PARAPET	P1	D20	AS SHOWN	A	2600					2600	103	2.466	660	
	P2	D16	AS SHOWN	A	9000					9000	9	1.578	128	
	P3	D16	AS SHOWN	A	4180					4180	9	1.578	59	
	P4	D12	AS SHOWN	A	9000					9000	8	0.888	64	
	P5	D12	AS SHOWN	A	4060					4060	8	0.888	29	
	P6	D12	AS SHOWN	G	2649	6351				9000	1	0.888	8	
	P7	D12	AS SHOWN	A	4062					4070	1	0.888	4	
	P8	D12	AS SHOWN	C	250	180				610	52	0.888	28	
	P9	D12	AS SHOWN	F	222	180	113	120		640	75	0.888	43	
	E1	D22	AS SHOWN	A	600					600	11	2.984	20	
	E2	D16	AS SHOWN	D	240	750	159	1061	240	2490	33	1.578	130	
	E3	D12	AS SHOWN	A	9000					9000	4	0.888	32	
	E4	D12	AS SHOWN	A	4060					4060	4	0.888	14	
	U1	D12	AS SHOWN	C	150	300				750	41	0.888	27	
	SUBTOTAL = 1246 kg													
BODY	A1	D16	AS SHOWN	B	5178~5053	240				5360	52	1.578	440	
	A2	D16	AS SHOWN	B	2830	240				3070	52	1.578	252	
	A3	D16	AS SHOWN	B	2830	240				3070	8	1.578	39	
	A4	D12	AS SHOWN	A	9000					9000	16	0.888	128	
	A5	D12	AS SHOWN	A	4060					4060	16	0.888	58	
	A6	D12	AS SHOWN	F	1416	180	113	120		1630	50	0.888	72	
	S1	D16	AS SHOWN	C	1200	480				2160	52	1.578	177	
	S2	D16	AS SHOWN	B	8520	480				9000	6	1.578	85	
	S3	D16	AS SHOWN	B	4660	480				5140	6	1.578	49	
	S4	D16	AS SHOWN	F	1208	240	151	128		1730	52	1.578	142	
	H1	D16	AS SHOWN	C	750	240				1230	30	1.578	58	A1 SIDE
	H2	D16	AS SHOWN	C	700	240				1180	35	1.578	65	A1 SIDE
		D16	AS SHOWN	C	800	240				1280	30	1.578	61	A2 SIDE
		D16	AS SHOWN	C	750	240				1230	30	1.578	58	A2 SIDE
	A1 SIDE SUBTOTAL = 1565 kg													
	A2 SIDE SUBTOTAL = 1561 kg													
FOOTING	F1	D22	AS SHOWN	C	3200	700				4600	34	2.984	467	
	F2	D22	AS SHOWN	A	3206~2129					2670	8	2.984	64	
	F3	D22	AS SHOWN	A	2188					2190	6	2.984	39	
	F4	D22	AS SHOWN	A	2100					2100	4	2.984	25	
	F5	D22	AS SHOWN	B	700	253~165				910	16	2.984	43	
	F6	D22	AS SHOWN	B	700	194				900	12	2.984	32	
	F7	D22	AS SHOWN	B	700	150				850	8	2.984	20	
	F8	D16	AS SHOWN	C	3200	240				3680	52	1.578	302	
	F9	D16	AS SHOWN	A	9000					9000	10	1.578	142	
	F10	D16	AS SHOWN	A	4180					4180	10	1.578	66	
	F11	D16	AS SHOWN	A	888					890	20	1.578	28	

BAR BENDING DIAGRAM

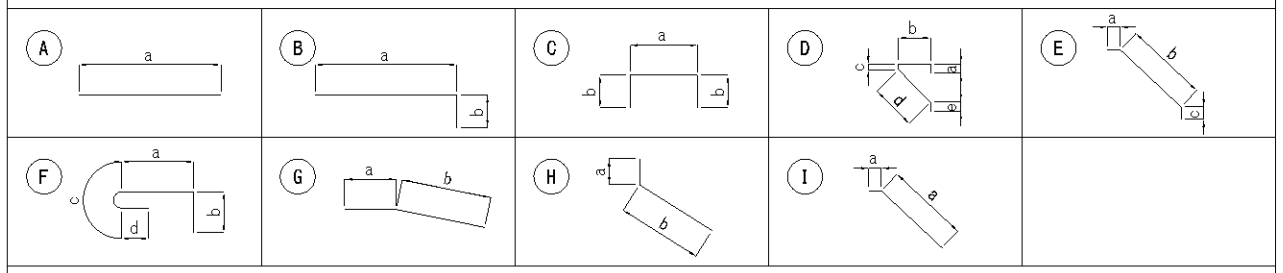

SCHEDULE OF REINFORCEMENT

LOCATION	BAR MARK	BAR SIZE	SPACING ctc(mm)	BAR SHAPE	DIMENSIONS (mm) OUT TO OUT a	b	c	d	e	LENGTH (mm)	NO. OF BARS	UNIT WT. (kg/m)	WEIGHT (kg)	REMARKS
FOOTING	F12	D16	AS SHOWN	B	240	190				430	8	1.578	5	
	F13	D12	AS SHOWN	A	9000					9000	10	0.888	80	
	F14	D12	AS SHOWN	A	4060					4060	10	0.888	36	
	F15	D16	AS SHOWN	C	3538	240				4020	6	1.578	38	
	F16	D16	AS SHOWN	B	8760	240				9000	6	1.578	85	
	F17	D16	AS SHOWN	B	4458	240				4700	6	1.578	44	
	F18	D16	AS SHOWN	C	700	240				1180	12	1.578	22	
	F19	D16	AS SHOWN	F	687	240	151	128		1210	50	1.578	95	
	SUBTOTAL = 1633 kg													
WING WALL	W1	D16	AS SHOWN	B	4250	240				4490	4	1.578	28	
	W2	D16	AS SHOWN	B	3990~2115	240				3300	6	1.578	31	
	W3	D16	AS SHOWN	B	2790~1665	240				2470	3	1.578	12	
	W4	D16	AS SHOWN	E	240	1397	240			1880	4	1.578	12	
	W5	D16	AS SHOWN	B	240	2160				2400	2	1.578	8	
	W6	D16	AS SHOWN	B	4250	240				4490	4	1.578	28	
	W7	D16	AS SHOWN	B	3990~2115	240				3300	6	1.578	31	
	W8	D16	AS SHOWN	B	2790~1665	240				2470	3	1.578	12	
	W9	D12	AS SHOWN	A	813~3146					1980	30	0.888	53	
	W10	D12	AS SHOWN	H	646	5589				6240	2	0.888	11	
	W11	D12	AS SHOWN	C	250	180				610	16	0.888	9	
	W12	D12	AS SHOWN	C	228	180				590	13	0.888	7	
	W13	D12	AS SHOWN	C	256	180				620	14	0.888	8	
	SUBTOTAL = 250 kg													
	TOTAL 250 x 2 = 500 kg													
	A1 SIDE TOTAL 1246 kg + 1565 kg + 1633 kg + 500 kg = 4944 kg													
	A2 SIDE TOTAL 1246 kg + 1561 kg + 1633 kg + 500 kg = 4940 kg													

KATAHIRA & ENGINEERS INTERNATIONAL

Designed by : Date :
Checked by : Date :

MINISTRY OF TRANSPORT OF THE REPUBLIC OF TAJIKISTAN

Approved by : Date :

THE PROJECT FOR REHABILITATION OF KURGAN TYUBE - DUSTI ROAD (PHASE-2)

TITLE : BAR ARRANGEMENT OF A1,A2 ABUTMENT (5)

SCALE : AS SHOWN

DRAWING No: BR2-13

Rv.

BAR ARRANGEMENT OF A1, A2 APPROACH SLAB SCALE 1:50

ELEVATION
1 - 1

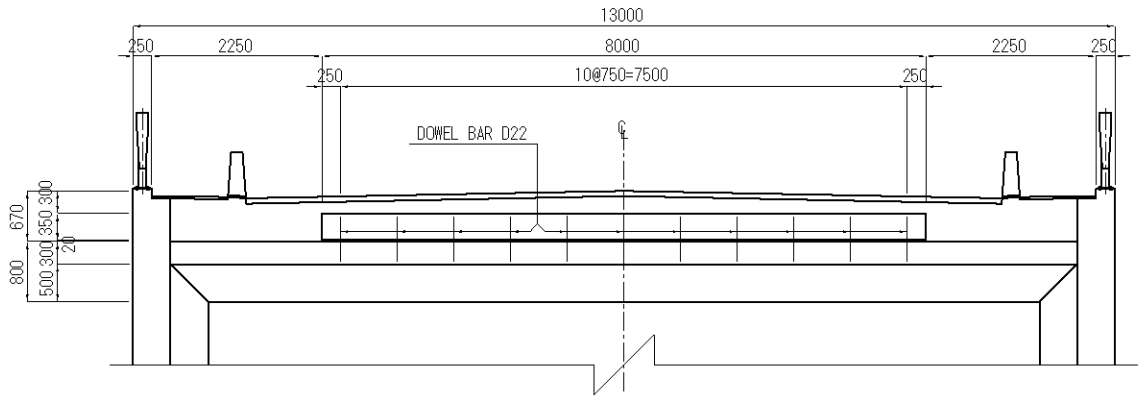

SECTION
6 - 6

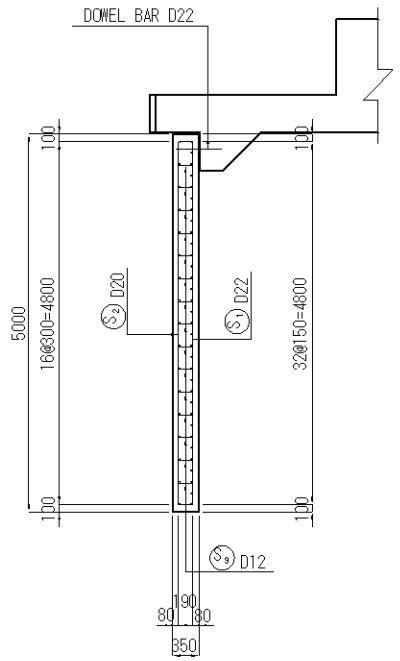

ELEVATION
3 - 3

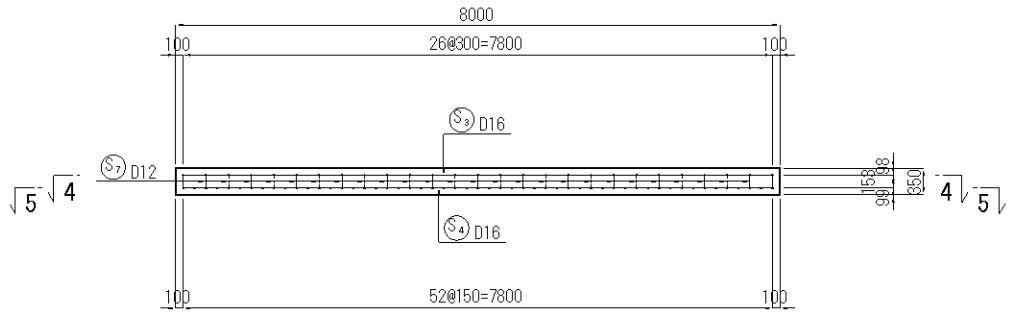

PLAN
2 - 2

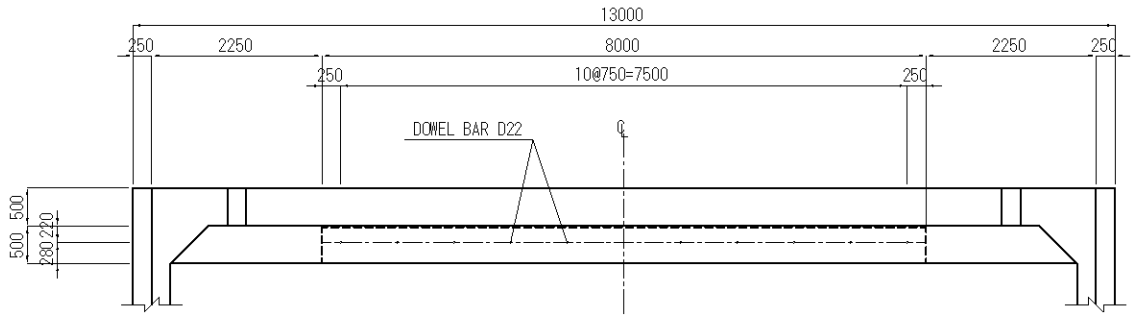

DETAIL SCALE=1:20

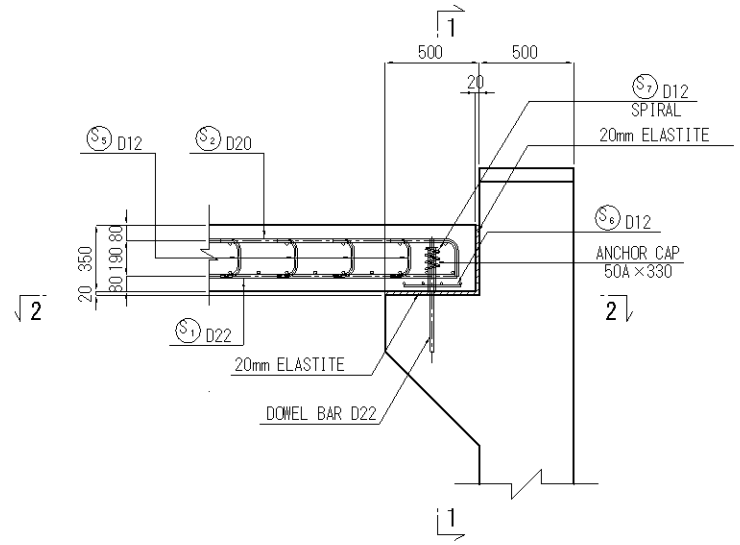

PLAN
4 - 4 5 - 5

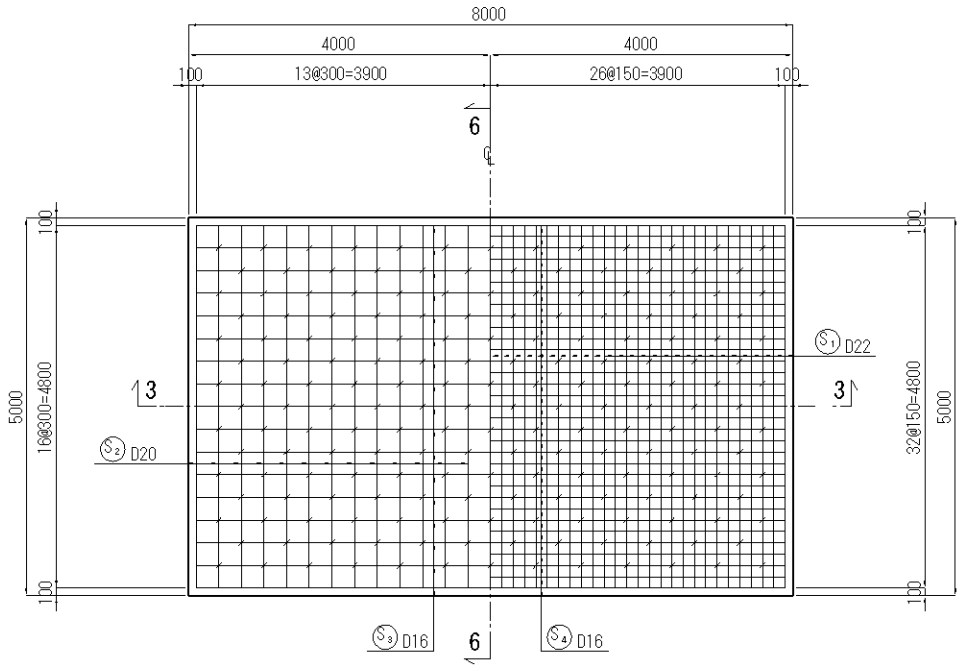

BAR BENDING DIAGRAM

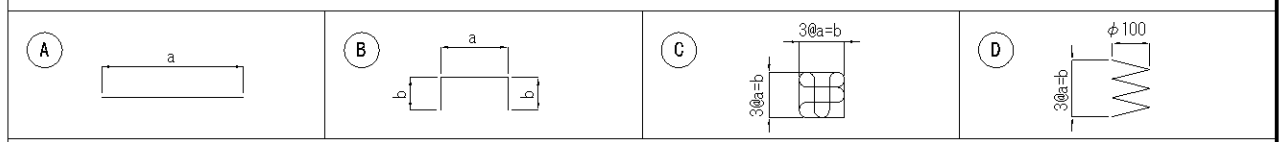

SCHEDULE OF REINFORCEMENT

LOCATION	BAR MARK	BAR SIZE	SPACING ctc(mm)	BAR SHAPE	DIMENSIONS (mm) OUT TO OUT a	b	c	d	e	LENGTH (mm)	NO. OF BARS	UNIT WT. (kg/m)	WEIGHT (kg)	REMARKS
APPROACH SLAB	S1	D22	AS SHOWN	A	4800					4800	53	2.984	759	
	S2	D20	AS SHOWN	B	4800	190				5180	27	2.466	345	
	S3	D16	AS SHOWN	B	7800	153				8110	17	1.578	218	
	S4	D16	AS SHOWN	A	7800					7800	33	1.578	406	
	S5	D12	AS SHOWN	B	181	100				390	188	0.888	65	
	S6	D12	AS SHOWN	C	100	300				1370	22	0.888	27	
	S7	D12	AS SHOWN	D	50	150				960	11	0.888	9	
												TOTAL	= 1829 kg	

KATAHIRA & ENGINEERS INTERNATIONAL
Designed by : Date :
Checked by : Date :

MINISTRY OF TRANSPORT OF THE REPUBLIC OF TAJIKISTAN
Approved by : Date :

THE PROJECT FOR REHABILITATION OF KURGAN TYUBE - DUSTI ROAD (PHASE-2)

TITLE : BAR ARRANGEMENT OF A1,A2 APPROACH SLAB

SCALE : AS SHOWN

DRAWING No: BR2-14

Rv.

GENERAL VIEW OF No.3 PORTAL RAHMEN BRIDGE

ELEVATION S=1:300

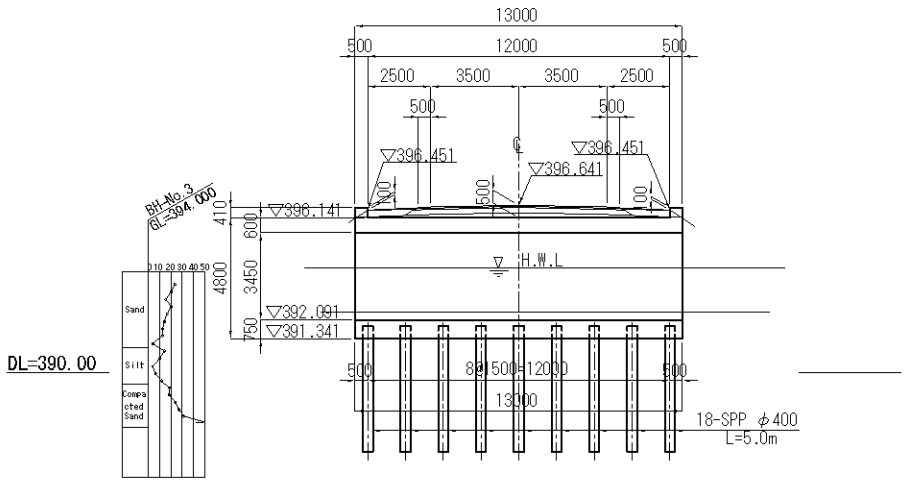

PORTAL RAHMEN S=1:200

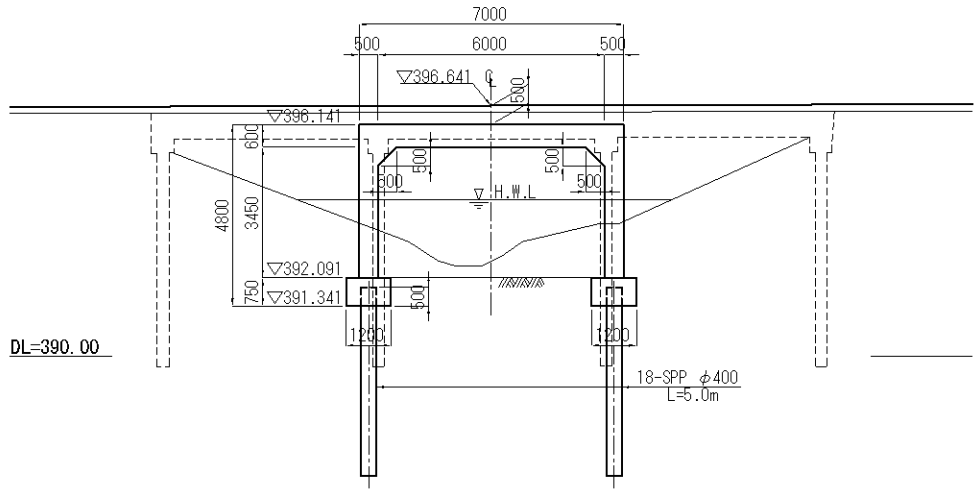

WING S=1:200

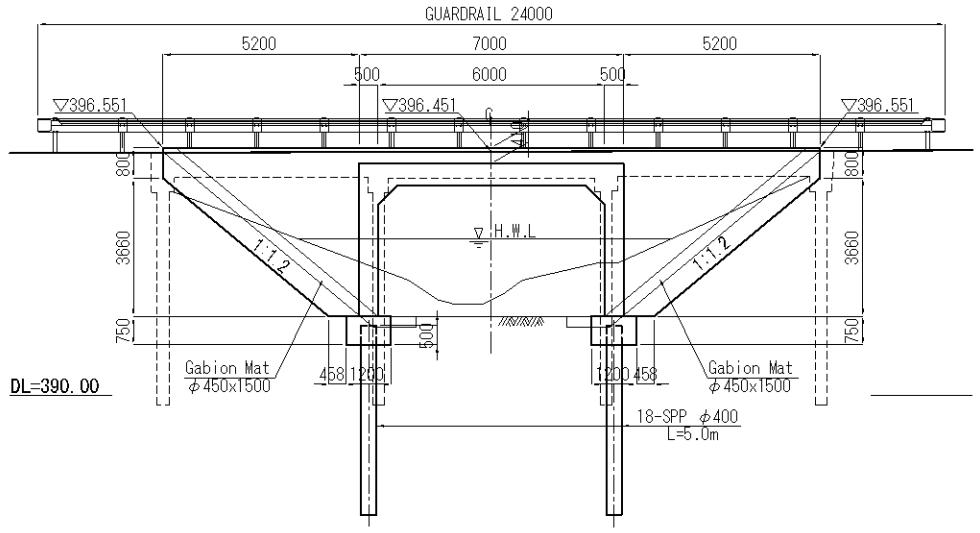

PLAN S=1:300

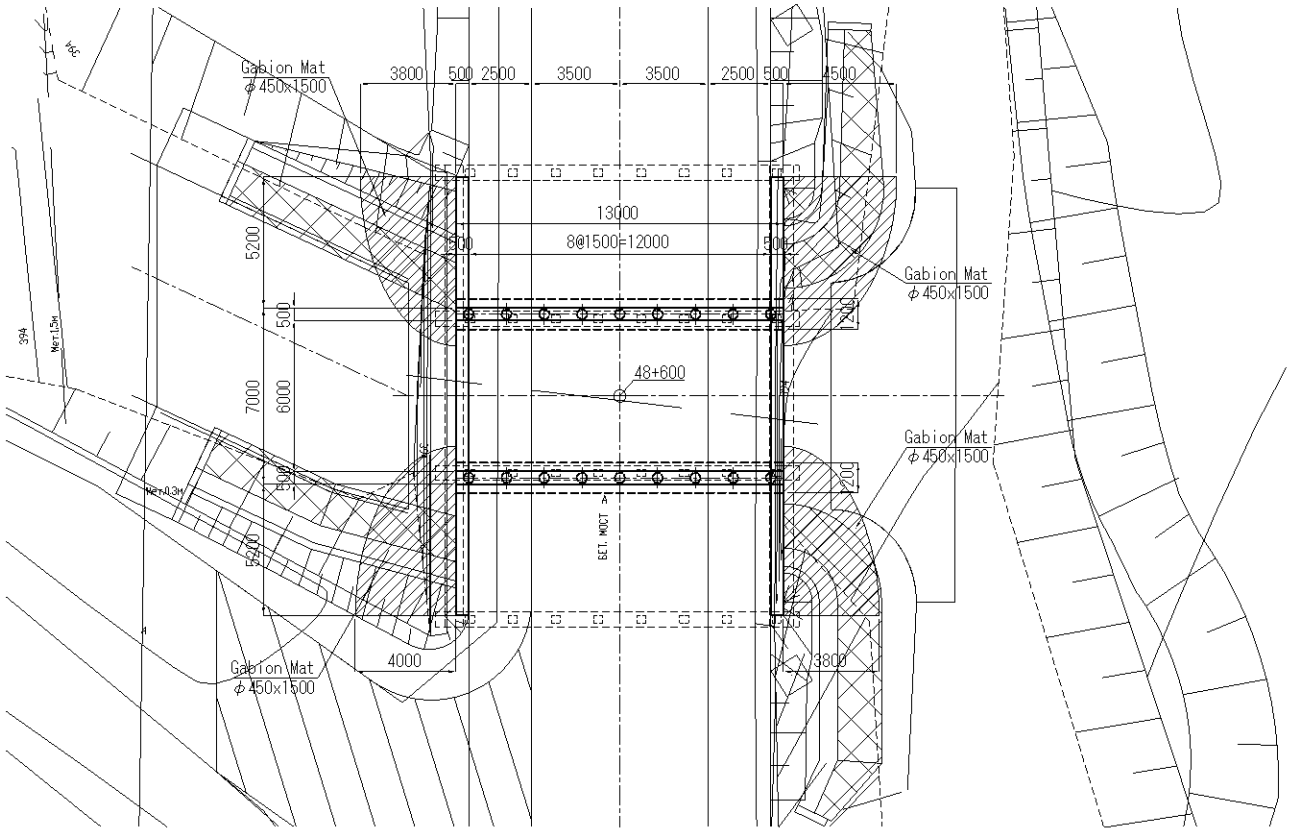

GENERAL SECTION S=1:300

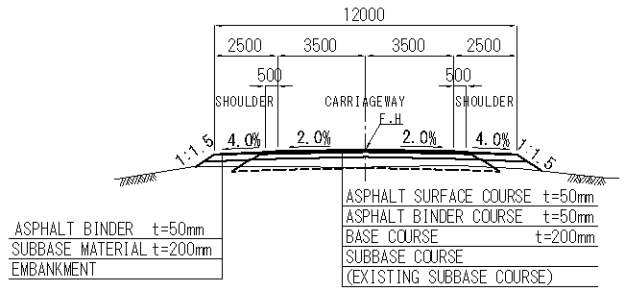

DESIGN CRITERIA

CONSTRUCTION WIDTH	INSIDE WIDTH(B)	B=6.00m
	CLEARANCE (H)	H=3.45m
VERTICAL LOAD	EARTH PRESSURE	LOADING SOIL
	LIVE LOAD	B-LIVE LOAD
HORIZONTAL LOAD	EARTH PRESSURE	AT REST
	COEFFICIENT	Ka=0.5
UNIT WEIGHT	BACKFILLING SOIL	18.0KN/m³
	REINFORCE CONCRETE	24.5KN/m³
IMPACT		i=0.3

MATERIAL STRENGTH

CONCRETE (24N/mm2)	DESIGN STRENGTH	$\sigma ck=24N/mm^2$
	ALLOWABLE COMPRE. STRESS	$\sigma ca=8N/mm^2$
	ALLOWABLE SHEAR STRESS	$\tau a=0.23N/mm^2$
	ALLOWABLE BONDING STRESS	$\tau o=1.6N/mm^2$
REINRORCE BAR (SD295)	YIELD STRENGTH	$fy=295N/mm^2$
	ALLOWABLE TENSILE STRESS	$\sigma sa=180N/mm^2$
STEEL PIPE PILE (SKK400)	YIELD STRENGTH	$fy=235N/mm^2$
	ALLOWABLE TENSILE STRESS	$\sigma sa=140N/mm^2$

KATAHIRA & ENGINEERS INTERNATIONAL

Designed by : Date :
Checked by : Date :

MINISTRY OF TRANSPORT OF THE REPUBLIC OF TAJIKISTAN

Approved by : Date :

THE PROJECT FOR REHABILITATION OF KURGAN TYUBE - DUSTI ROAD (PHASE-2)

TITLE : GENERAL VIEW OF NO.3 PORTAL RAHMEN BRIDGE

SCALE : AS SHOWN

DRAWING No: BR3-01

Rv.

BAR ARRANGEMENT OF PORTAL RAHMEN BRIDGE(1) SCALE 1:50

ELEVATION

1 - 1 2 - 2

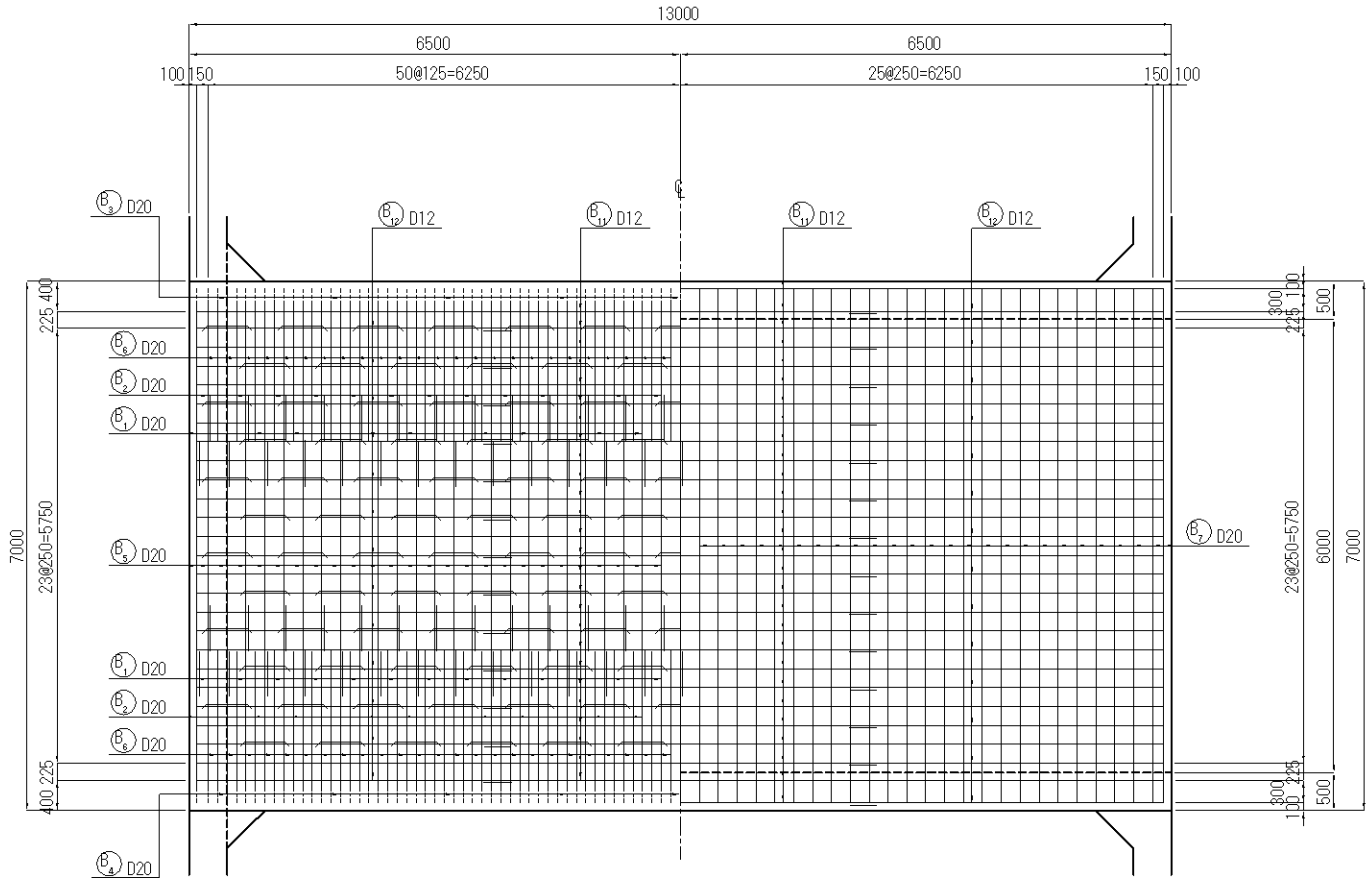

4 - 4 5 - 5

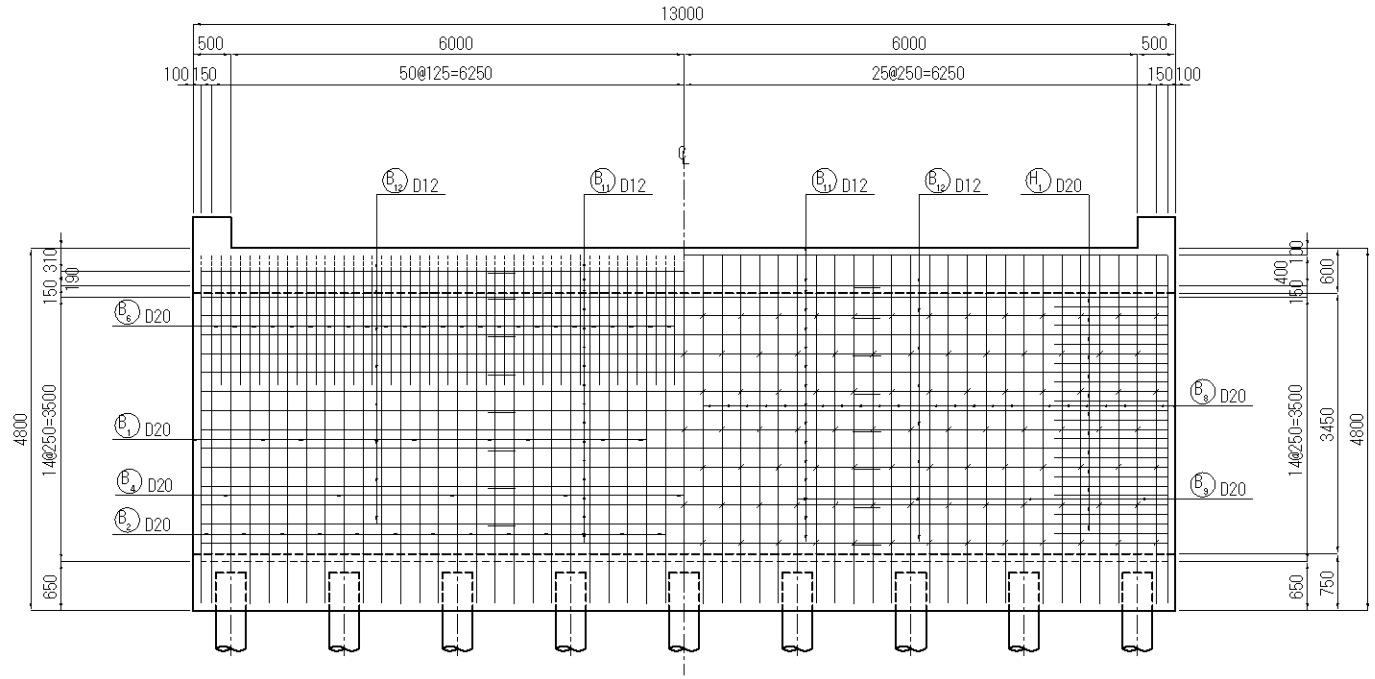

PLAN

6 - 6 7 - 7

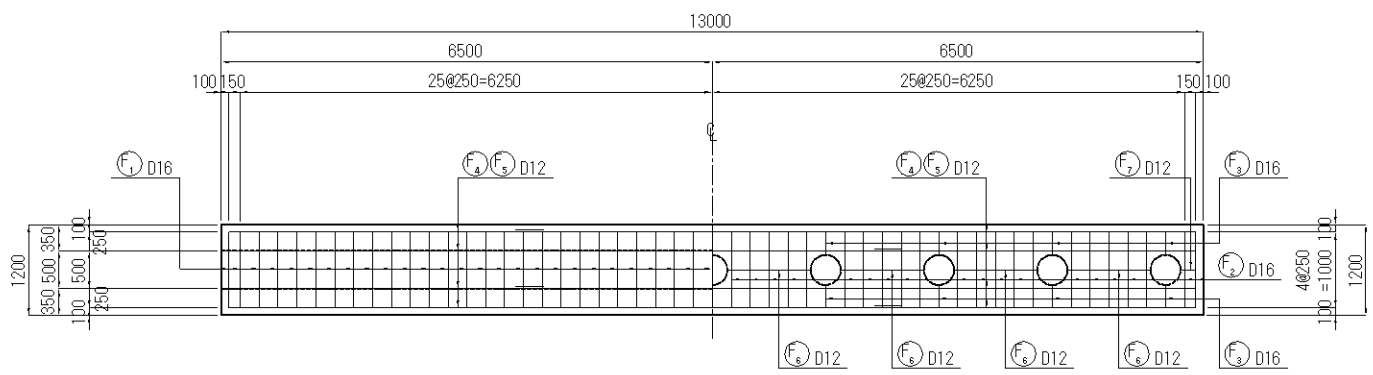

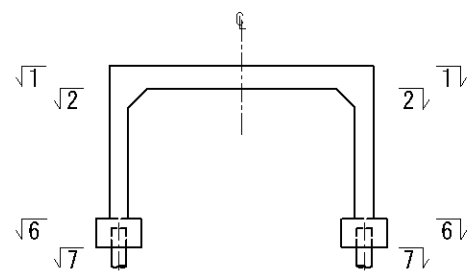

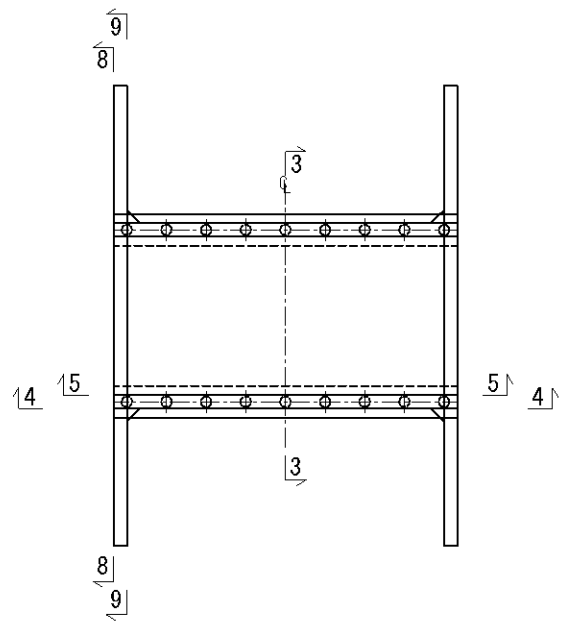

KATAHIRA & ENGINEERS INTERNATIONAL Designed by : Date : Checked by : Date :	MINISTRY OF TRANSPORT OF THE REPUBLIC OF TAJIKISTAN Approved by : Date :	THE PROJECT FOR REHABILITATION OF KURGAN TYUBE - DUSTI ROAD (PHASE-2)	TITLE : BAR ARRANGEMENT OF NO.3 PORTAL RAHMEN BRIDGE(1)	SCALE : 1/50	DRAWING No: BR3-02

BAR ARRANGEMENT OF NO.3 PORTAL RAHMEN BRIDGE (2) SCALE 1:50

SECTION
3 - 3

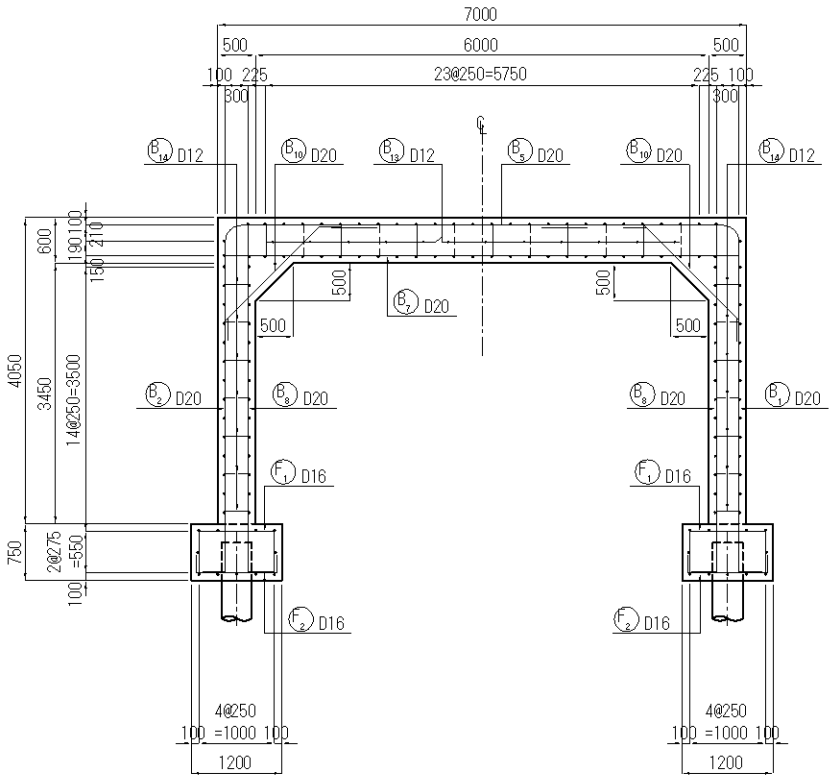

ELEVATION

8 - 8

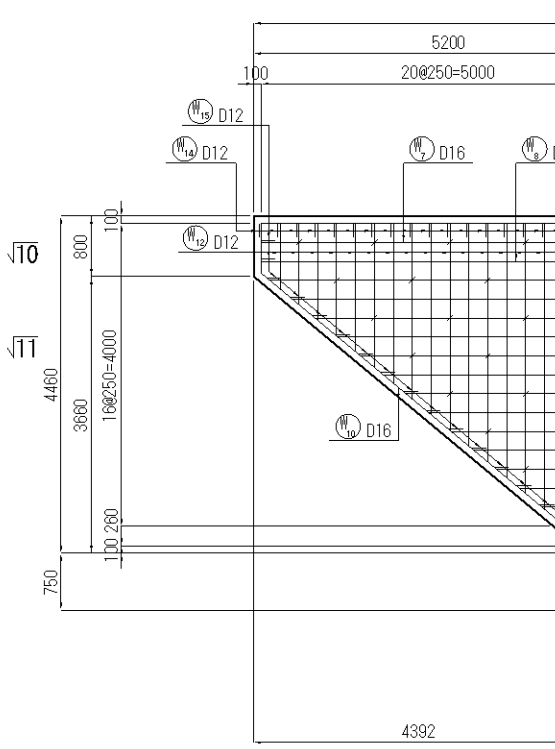

9 - 9

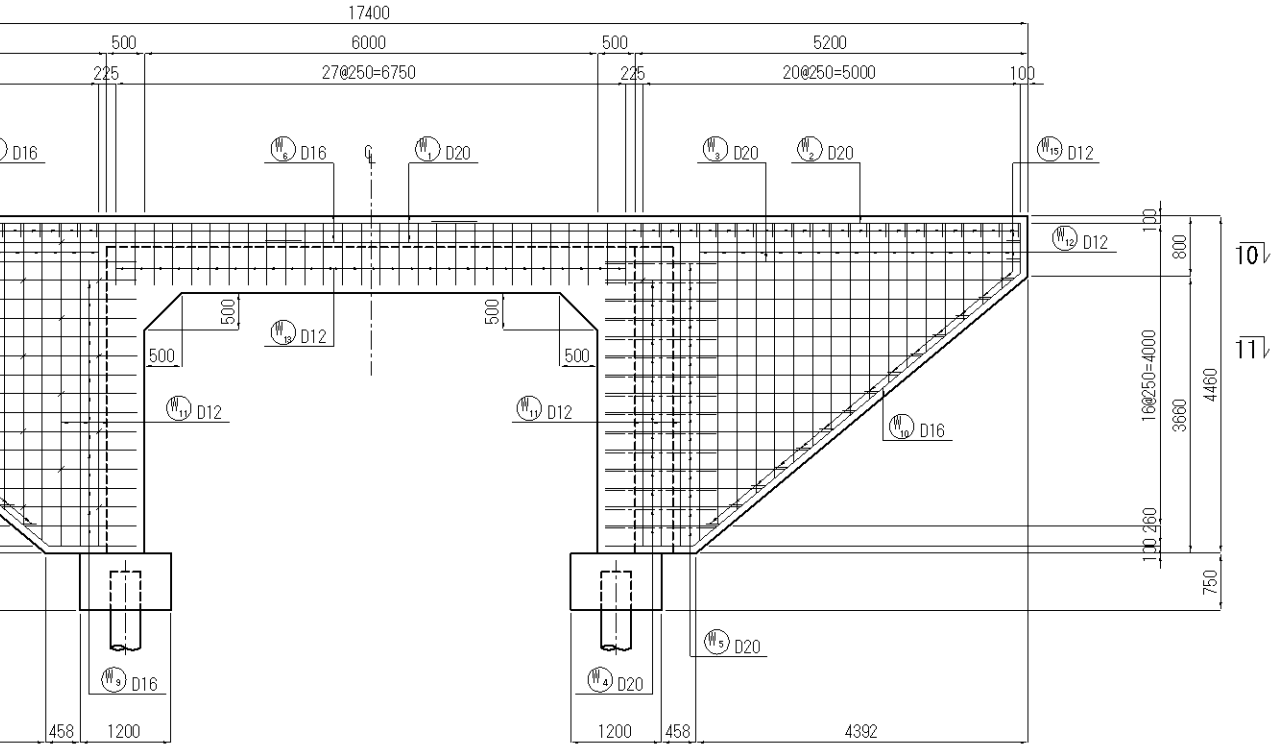

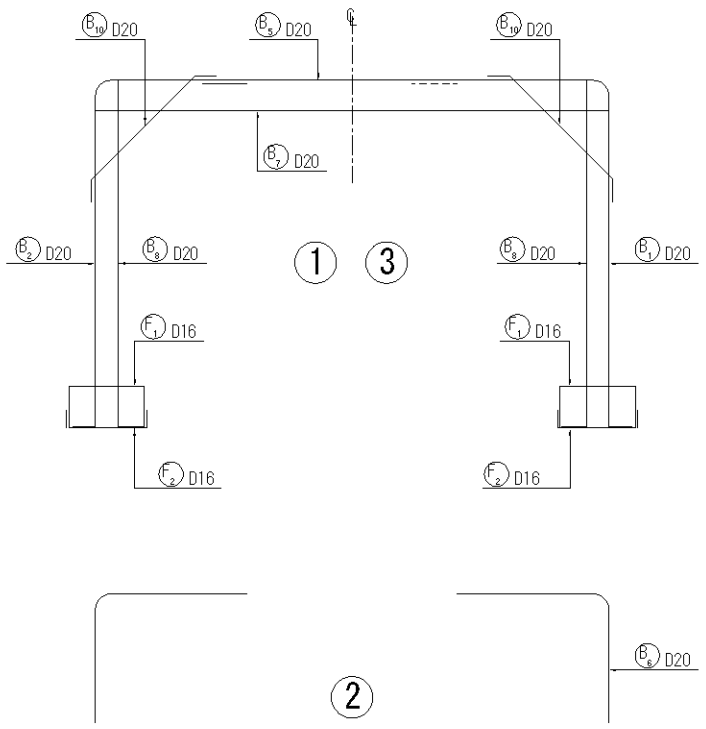

10 - 10

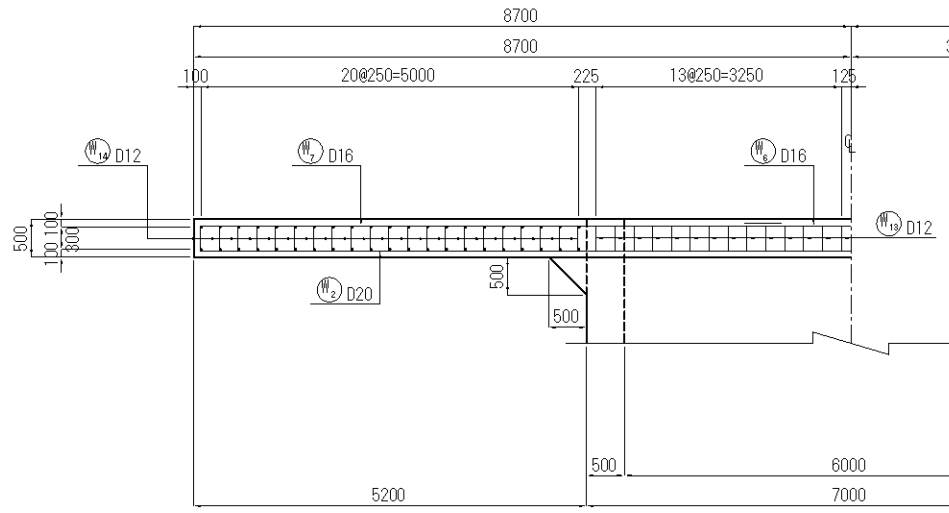

11 - 11

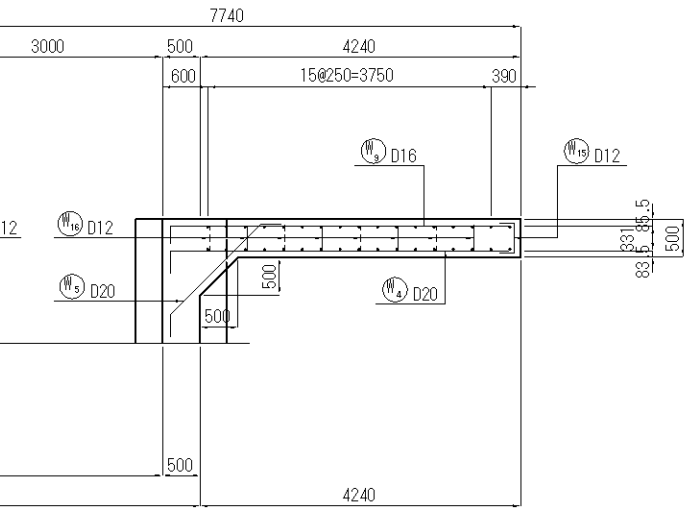

KATAHIRA & ENGINEERS INTERNATIONAL Designed by : Date : Checked by : Date :	MINISTRY OF TRANSPORT OF THE REPUBLIC OF TAJIKISTAN Approved by : Date :	THE PROJECT FOR REHABILITATION OF KURGAN TYUBE - DUSTI ROAD (PHASE-2)	TITLE : BAR ARRANGEMENT OF NO.3 PORTAL RAHMEN BRIDGE(2)	SCALE : 1/50	DRAWING No: BR3-03

BAR ARRANGEMENT OF NO.3 PORTAL RAHMEN BRIDGE (3) SCALE 1:50

BAR BENDING DIAGRAM

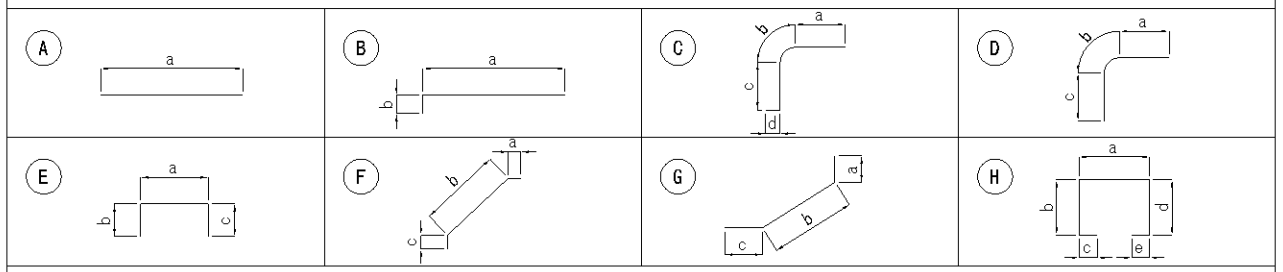

SCHEDULE OF REINFORCEMENT

LOCATION	BAR MARK	BAR SIZE	SPACING ctc(mm)	BAR SHAPE	DIMENSIONS (mm) OUT TO OUT a	b	c	d	e	LENGTH (mm)	NO. OF BARS	UNIT WT. (kg/m)	WEIGHT (kg)	REMARKS
BODY	B1	D20	AS SHOWN	C	2400	330	4372	300		9590	44	2.466	1041	
	B2	D20	AS SHOWN	C	1800	330	4372	300		7410	44	2.466	804	
	B3	D20	AS SHOWN	D	2400	330	3990			8900	9	2.466	198	
	B4	D20	AS SHOWN	D	1800	330	3990			6720	9	2.466	149	
	B5	D20	AS SHOWN	A	3380					3380	53	2.466	442	
	B6	D20	AS SHOWN	D	1800	330	1500			3630	100	2.466	895	
	B7	D20	AS SHOWN	A	6800					6800	53	2.466	889	
	B8	D20	AS SHOWN	B	4582	300				4890	88	2.466	1061	
	B9	D20	AS SHOWN	A	4200					4200	18	2.466	186	
	B10	D20	AS SHOWN	F	300	1780	300			2380	106	2.466	622	
	B11	D12	AS SHOWN	A	9000					9000	80	0.888	639	
	B12	D12	AS SHOWN	A	4260					4260	80	0.888	303	
	B13	D12	AS SHOWN	H	532	432	180	432	180	1760	150	0.888	234	
	B14	D12	AS SHOWN	E	332	180	180			700	358	0.888	223	
	H1	D20	AS SHOWN	B	1500	300				1800	56	2.466	249	
												SUBTOTAL	= 7935 kg	
FOOTING	F1	D16	AS SHOWN	E	1000	550	550			2100	106	1.578	351	
	F2	D16	AS SHOWN	E	1000	240	240			1480	88	1.578	206	
	F3	D16	AS SHOWN	B	300	240				540	36	1.578	31	
	F4	D12	AS SHOWN	A	9000					9000	20	0.888	160	
	F5	D12	AS SHOWN	A	4260					4260	20	0.888	76	
	F6	D12	AS SHOWN	A	1100					1100	16	0.888	16	
	F7	D12	AS SHOWN	B	200	180				380	4	0.888	1	
												SUBTOTAL	= 841 kg	
WING WALL	W1	D20	AS SHOWN	A	10000					10000	2	2.466	49	
	W2	D20	AS SHOWN	A	7800					7800	2	2.466	38	
	W3	D20	AS SHOWN	B	5500	300				5800	2	2.466	29	
	W4	D20	AS SHOWN	B	5384 ~1484	300				3740	28	2.466	258	
	W5	D20	AS SHOWN	F	300	1681	300			2290	30	2.466	169	
	W6	D16	AS SHOWN	A	10000					10000	2	1.578	32	
	W7	D16	AS SHOWN	A	7680					7680	2	1.578	24	
	W8	D16	AS SHOWN	B	5500	240				5740	2	1.578	18	
	W9	D16	AS SHOWN	B	5384 ~1484	240				3680	28	1.578	163	
	W10	D16	AS SHOWN	G	653	5634	1172			7460	4	1.578	47	
	W11	D12	AS SHOWN	A	4260					4260	12	0.888	45	
	W12	D12	AS SHOWN	A	4195 ~861					2530	68	0.888	153	
	W13	D16	AS SHOWN	E	300	810	810			1920	28	1.578	85	

BAR BENDING DIAGRAM

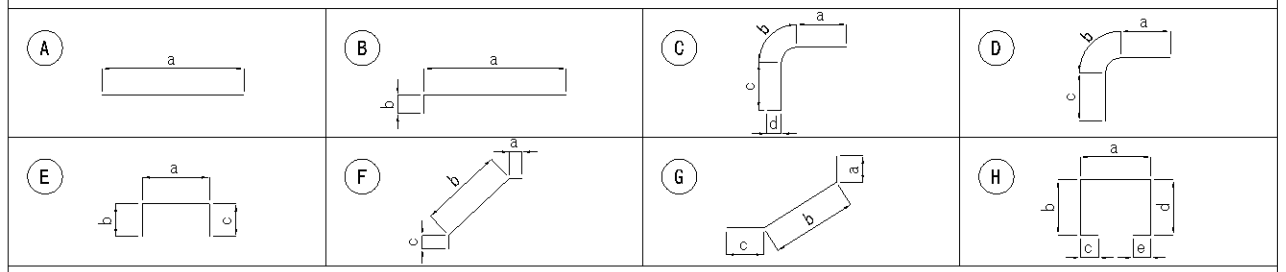

SCHEDULE OF REINFORCEMENT

LOCATION	BAR MARK	BAR SIZE	SPACING ctc(mm)	BAR SHAPE	DIMENSIONS (mm) OUT TO OUT a	b	c	d	e	LENGTH (mm)	NO. OF BARS	UNIT WT. (kg/m)	WEIGHT (kg)	REMARKS
WING WALL	W14	D12	AS SHOWN	E	300	180	180			660	42	0.888	25	
	W15	D12	AS SHOWN	E	331	180	180			700	32	0.888	20	
	W16	D12	AS SHOWN	E	361	180	180			730	56	0.888	36	
												SUBTOTAL	= 1191 kg	
												TOTAL 1191 x 2	= 2382 kg	
												GRAND TOTAL	7935 kg + 841 kg + 2382 kg = 11158 kg	

GENERAL ARRANGEMENT OF PILES SCALE 1:20

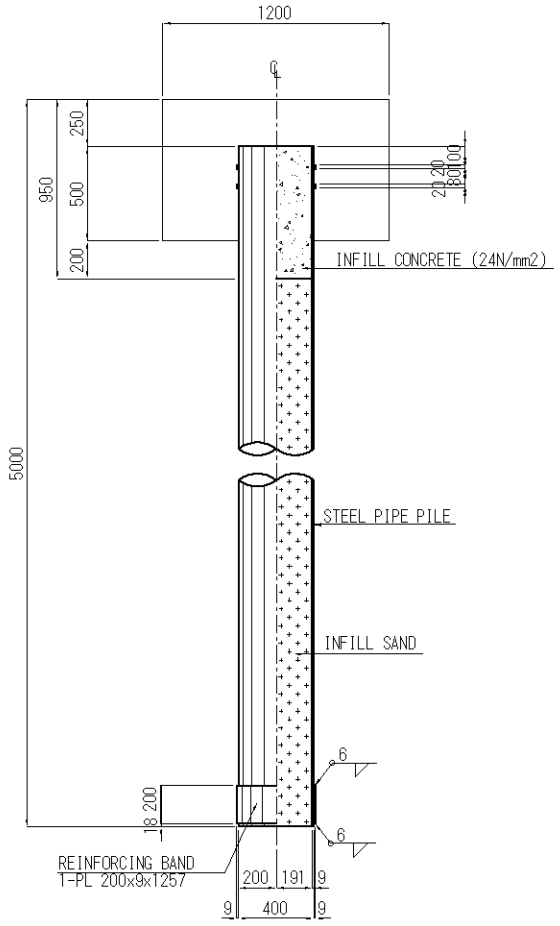

DETAIL OF TOP PILE SCALE 1:10

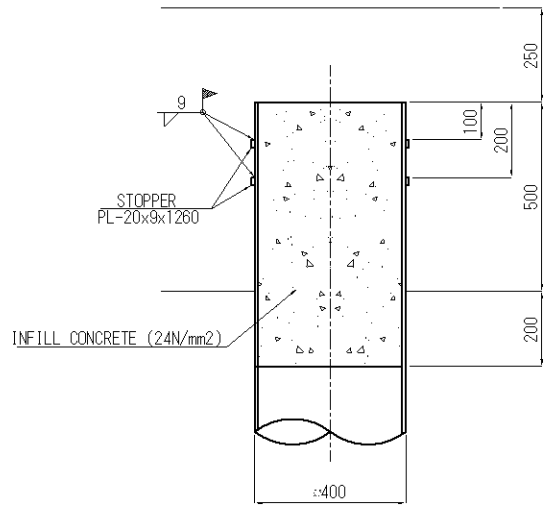

MATERIAL LIST

ITEM	MARK	MATERIAL	SIZE	LENGTH (mm)	QUANTITY (No)	UNIT WT. (kg/m)	WT/PC. (kg)	WEIGHT (kg)	REMARKS
STEEL PIPE PILE	SPP	SKK400	φ400x9	5000	18	86.8	434	7812	
							SUBTOTAL	= 7812 kg	
ATTACHMENT PARTS PER ONE PILE									
STOPPER	PL	SS400	20 x 9	1260	2	1.41	1.78	4	
REINFORCING BAND	PL	SS400	200 x 9	1257	1	14.1	17.72	18	
							SUBTOTAL	= 22 kg	
							TOTAL 22 x 18	= 396 kg	
							GRAND TOTAL	7812 kg + 396 kg = 8208 kg	

KATAHIRA & ENGINEERS INTERNATIONAL
Designed by : Date :
Checked by : Date :

MINISTRY OF TRANSPORT OF THE REPUBLIC OF TAJIKISTAN
Approved by : Date :

THE PROJECT FOR REHABILITATION OF KURGAN TYUBE - DUSTI ROAD (PHASE-2)

TITLE : BAR ARRANGEMENT OF NO.3 PORTAL RAHMEN BRIDGE (3)

SCALE : 1/50

DRAWING No: BR3-04

Rv.

GENERAL VIEW OF No.4 PORTAL RAHMEN BRIDGE

ELEVATION S=1:300

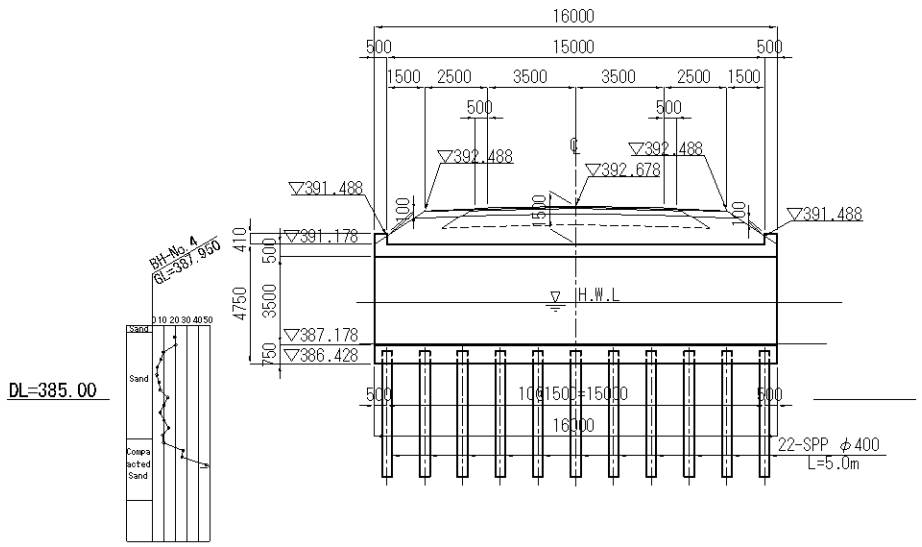

PORTAL RAMEN S=1:200

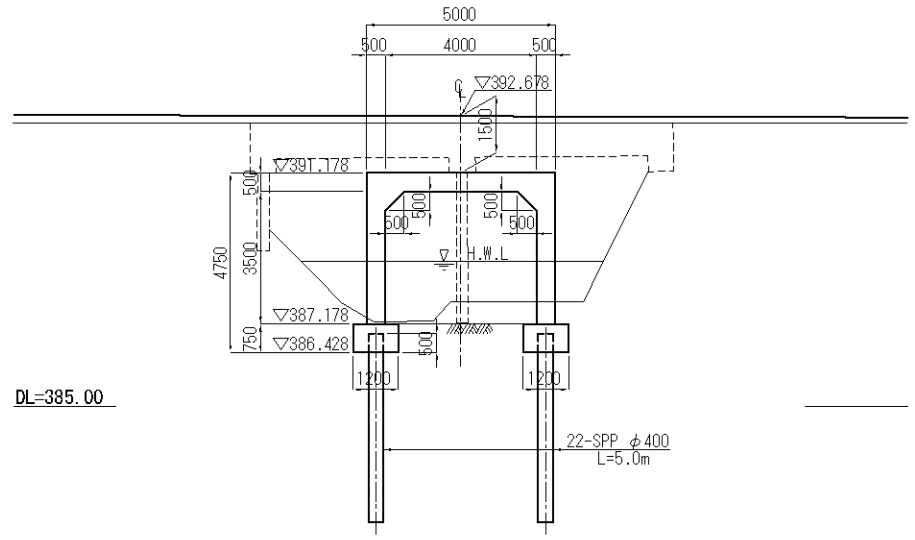

WING S=1:200

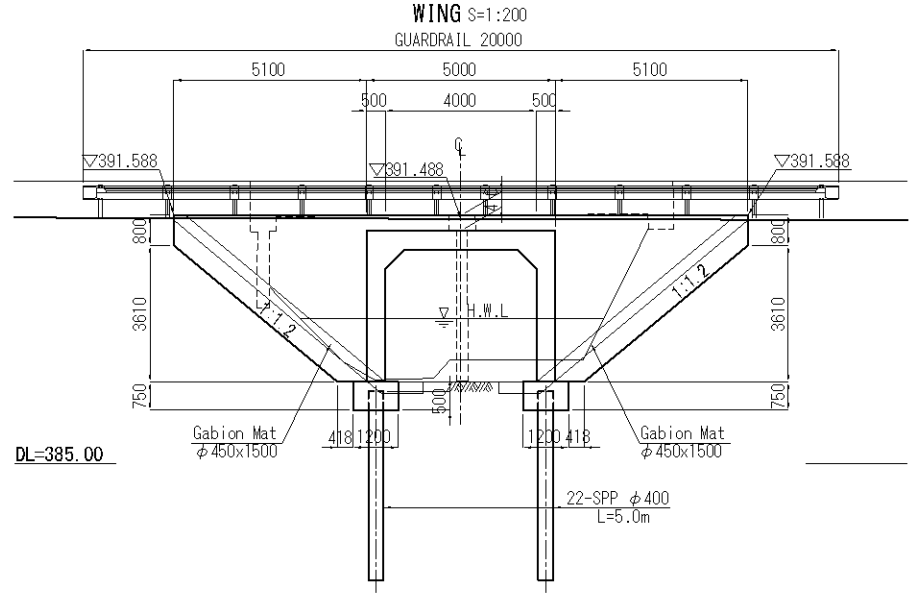

PLAN S=1:300

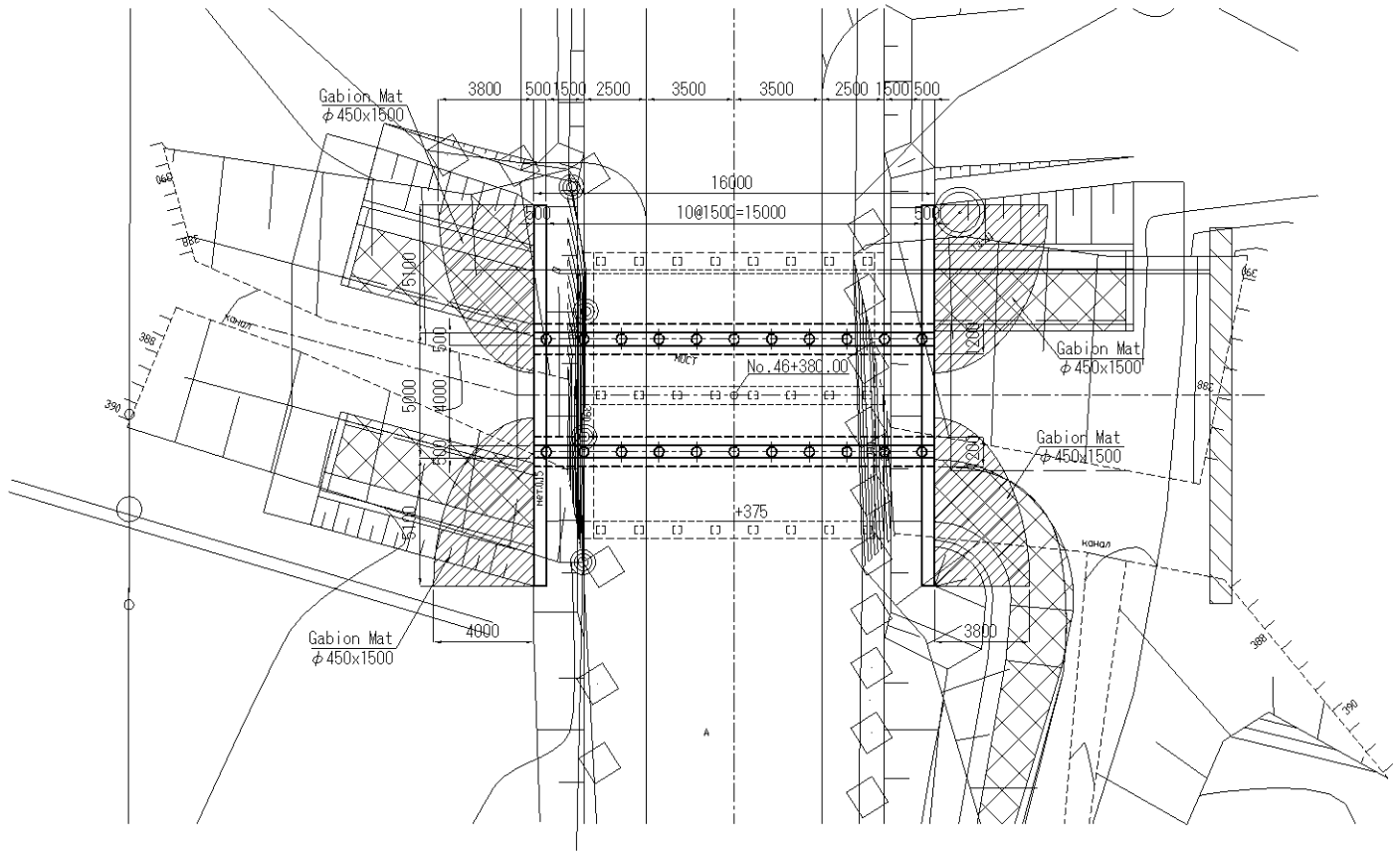

GENERAL SECTION S=1:300

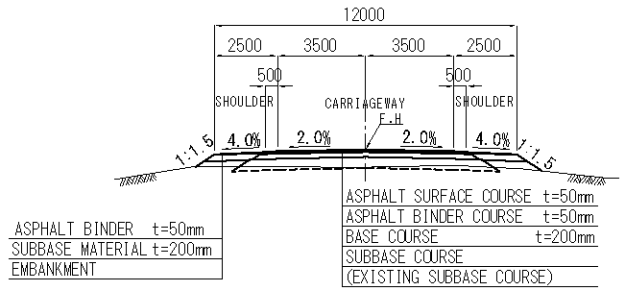

DESIGN CRITERIA

CONSTRUCTION WIDTH	INSIDE WIDTH(B)	B=4.00m
	CLEARANCE (H)	H=3.50m
VERTICAL LOAD	EARTH PRESSURE	LOADING SOIL
	LIVE LOAD	B-LIVE LOAD
HORIZONTAL LOAD	EARTH PRESSURE	AT REST
	COEFFICIENT	Ka=0.5
UNIT WEIGHT	BACKFILLING SOIL	18.0kN/m³
	REINRORCE CONCRETE	24.5kN/m³
IMPACT		i=0.3

MATERIAL STRENGTH

CONCRETE (24N/mm2)	DESING STRENGTH	$\sigma ck=24N/mm^2$
	ALLOWABLE COMPRE. STRESS	$\sigma ca=8N/mm^2$
	ALLOWABLE SHEAR STRESS	$\tau a=0.23N/mm^2$
	ALLOWABLE BONDING STRESS	$\tau o=1.6N/mm^2$
REINRORCE BAR (SD295)	YIELD STRENGTH	$fy=295N/mm^2$
	ALLOWABLE TENSILE STRESS	$\sigma sa=180N/mm^2$
STEEL PIPE PILE (SKK400)	YIELD STRENGTH	$fy=235N/mm^2$
	ALLOWABLE TENSILE STRESS	$\sigma sa=140N/mm^2$

KATAHIRA & ENGINEERS INTERNATIONAL Designed by : Date : Checked by : Date :	MINISTRY OF TRANSPORT OF THE REPUBLIC OF TAJIKISTAN Approved by : Date :	THE PROJECT FOR REHABILITATION OF KURGAN TYUBE - DUSTI ROAD (PHASE-2)	TITLE : GENERAL VIEW OF NO.4 PORTAL RAHMEN BRIDGE	SCALE : AS SHOWN	DRAWING No: BR4-01

BAR ARRANGEMENT OF NO.4 PORTAL RAHMEN BRIDGE (1) SCALE 1:50

ELEVATION

1 - 1

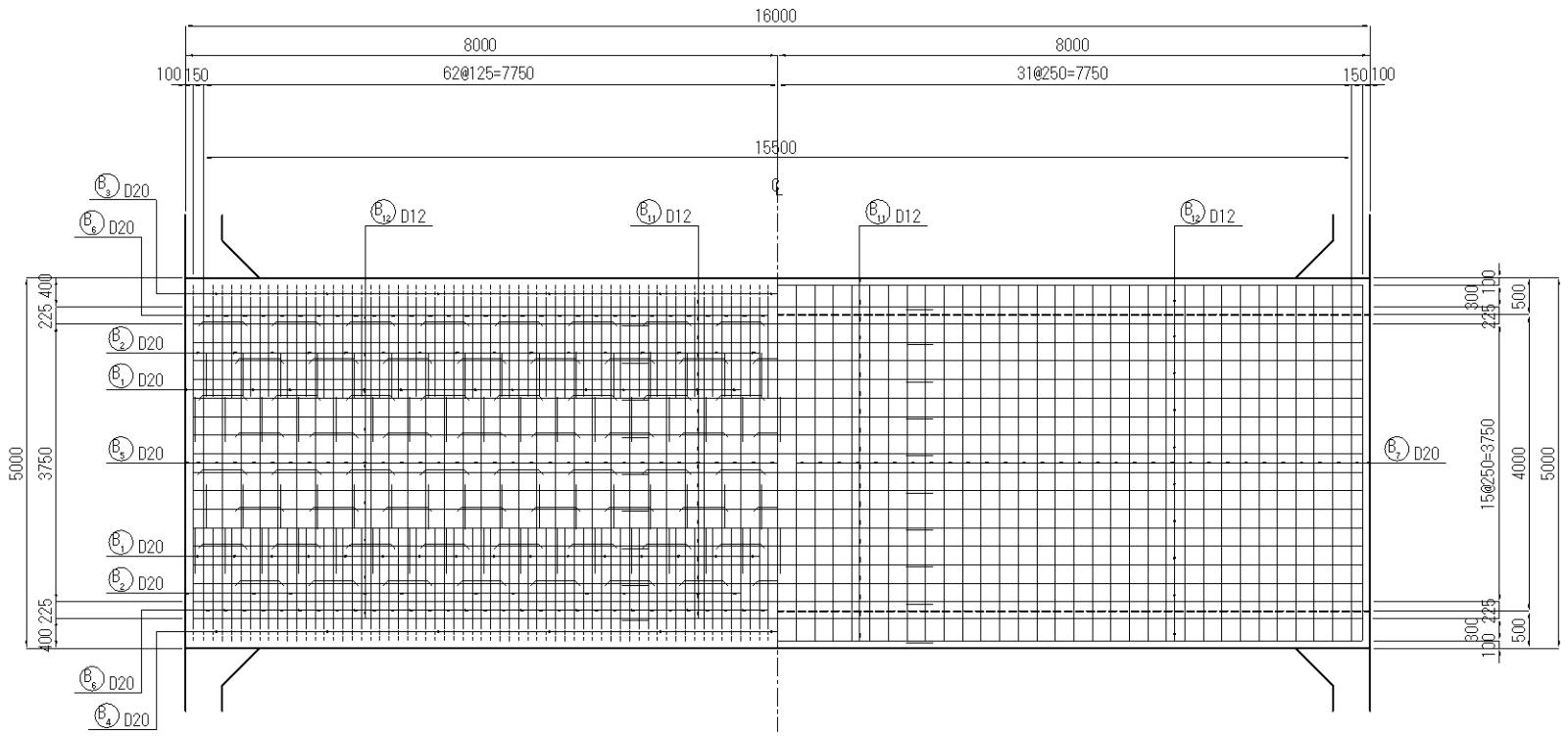

2 - 2

SECTION

3 - 3

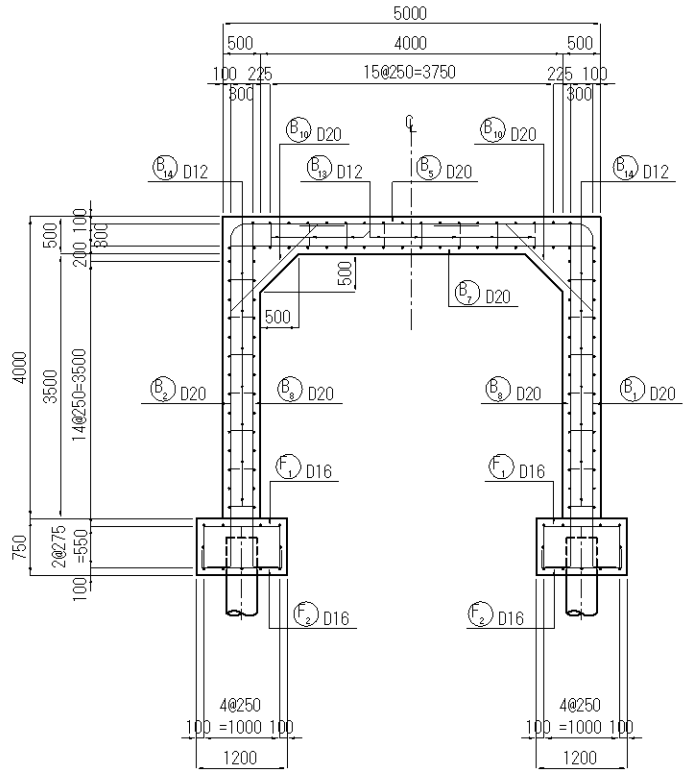

4 - 4

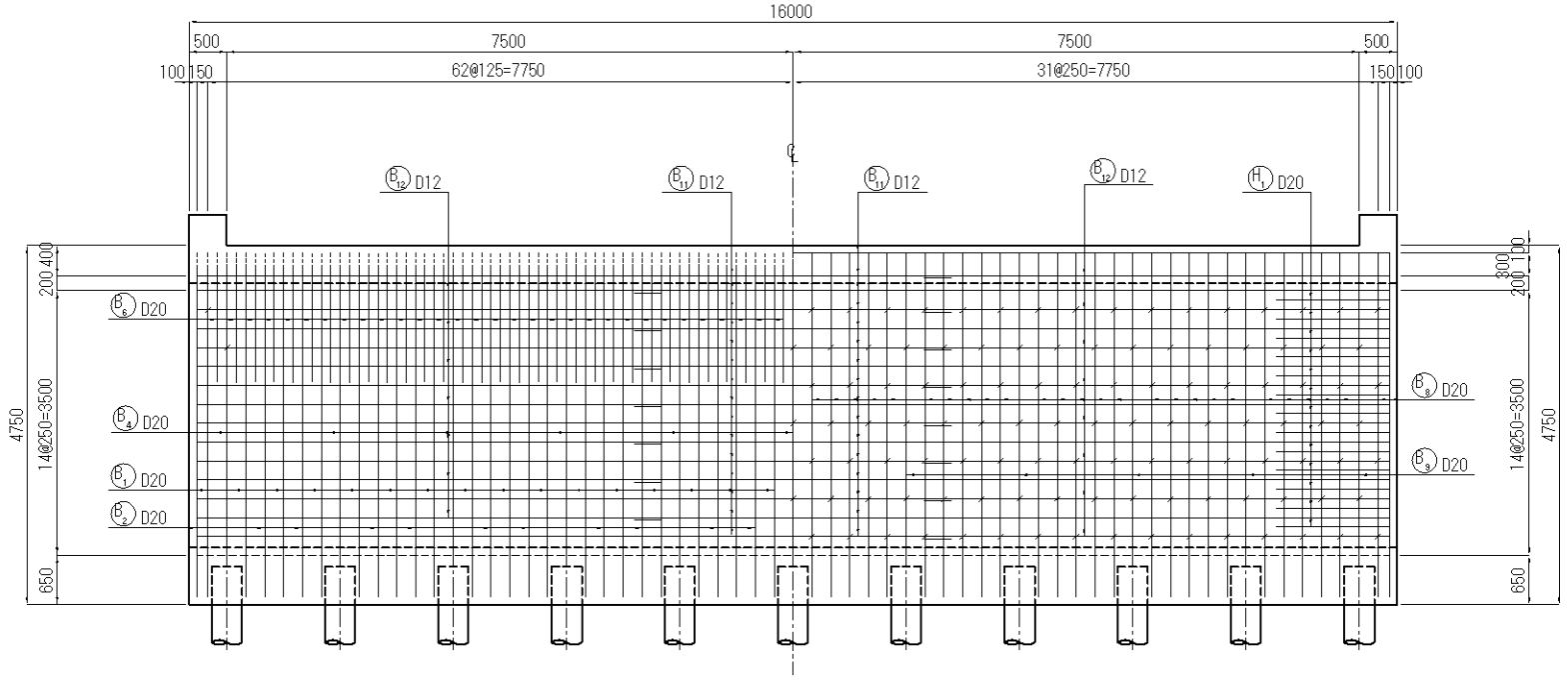

5 - 5

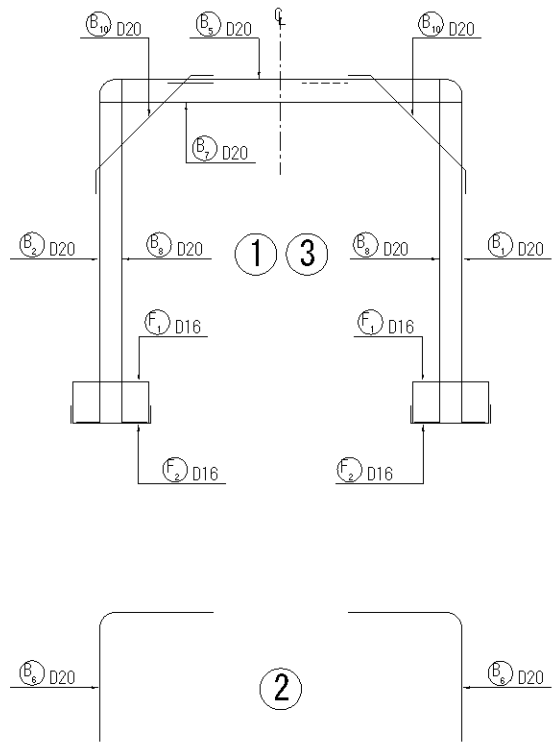

KATAHIRA & ENGINEERS INTERNATIONAL Designed by : Date : Checked by : Date :	MINISTRY OF TRANSPORT OF THE REPUBLIC OF TAJIKISTAN Approved by : Date :	THE PROJECT FOR REHABILITATION OF KURGAN TYUBE - DUSTI ROAD (PHASE-2)	TITLE : BAR ARRANGMENT OF NO.4 PORTAL RAHMEN BRIDGE (1)	SCALE : 1/50	DRAWING No: BR04-02

BAR ARRANGEMENT OF NO.4 PORTAL RAHMEN BRIDGE (2) SCALE 1:50

PLAN

6 - 6 7 - 7

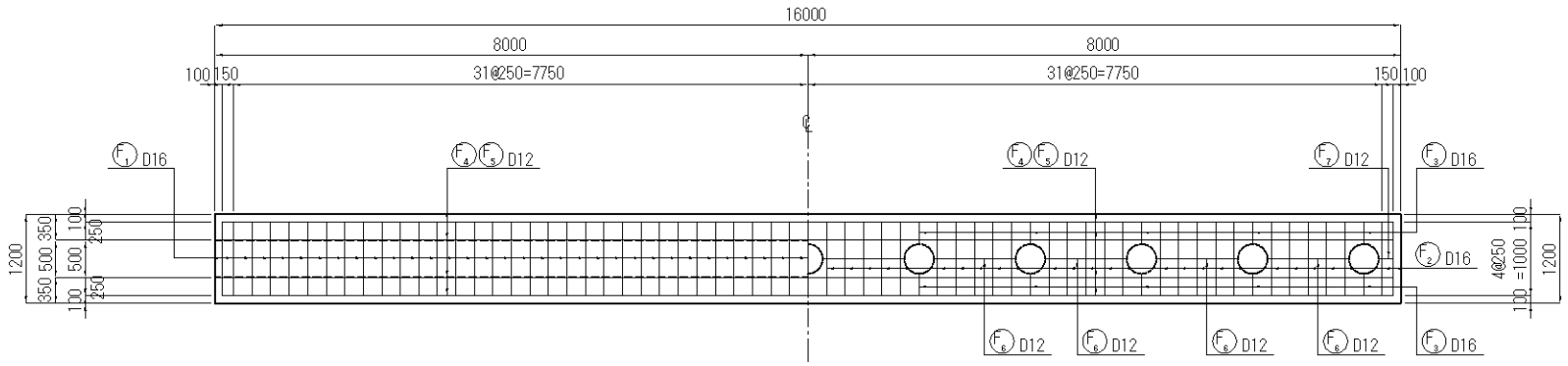

MARKING

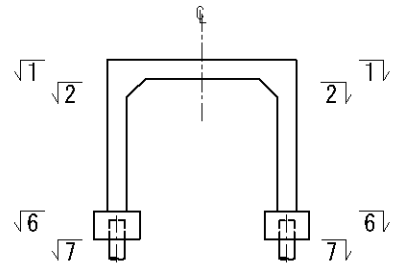

8 - 8 9 - 9

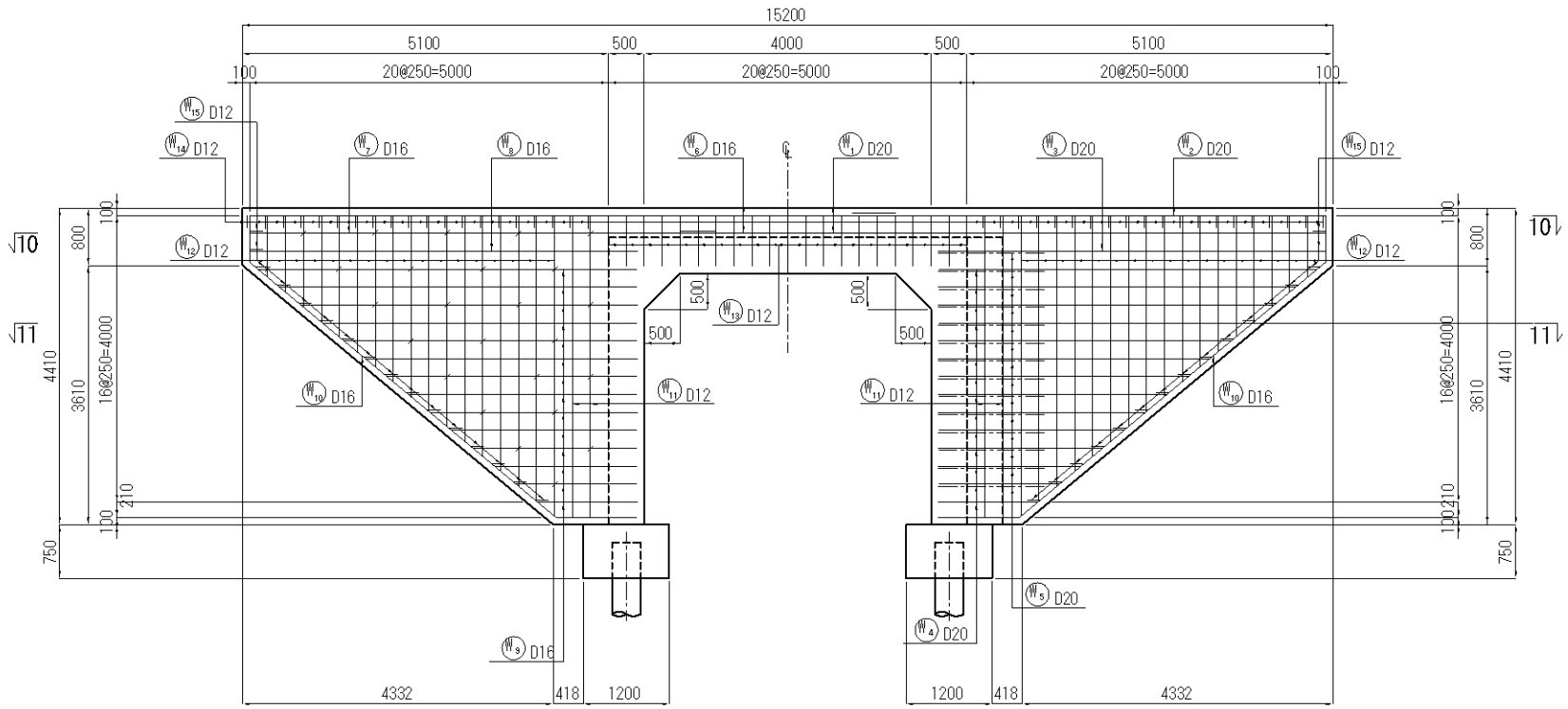

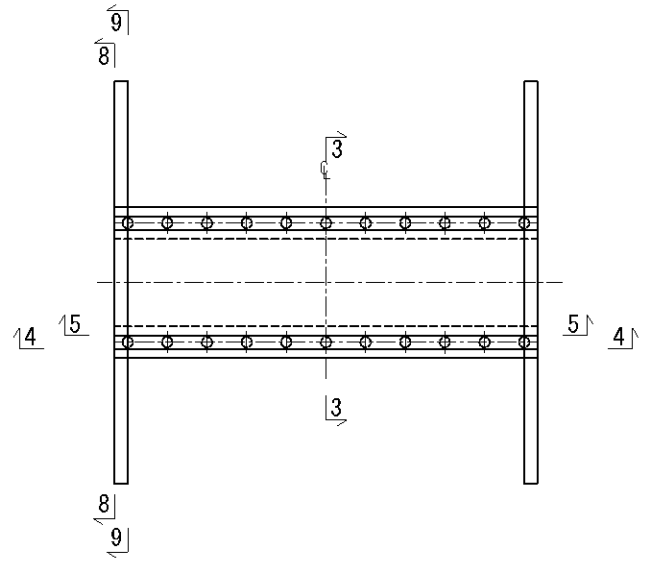

10 - 10 11 - 11

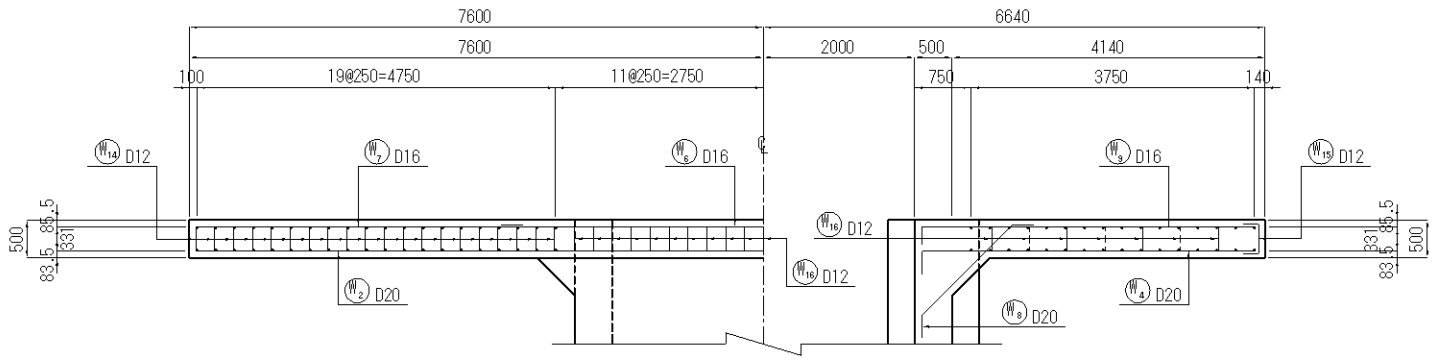

KATAHIRA & ENGINEERS INTERNATIONAL Designed by : Date : Checked by : Date :	MINISTRY OF TRANSPORT OF THE REPUBLIC OF TAJIKISTAN Approved by : Date :	THE PROJECT FOR REHABILITATION OF KURGAN TYUBE - DUSTI ROAD (PHASE-2)	TITLE : BAR ARRANGMENT OF NO.4 PORTAL RAHMEN BRIDGE (2)	SCALE : 1/50 / DRAWING No: BR4-03

BAR ARRANGEMENT OF NO.4 PORTAL RAHMEN BRIDGE (3) SCALE 1:50

ELEVATION

BAR BENDING DIAGRAM

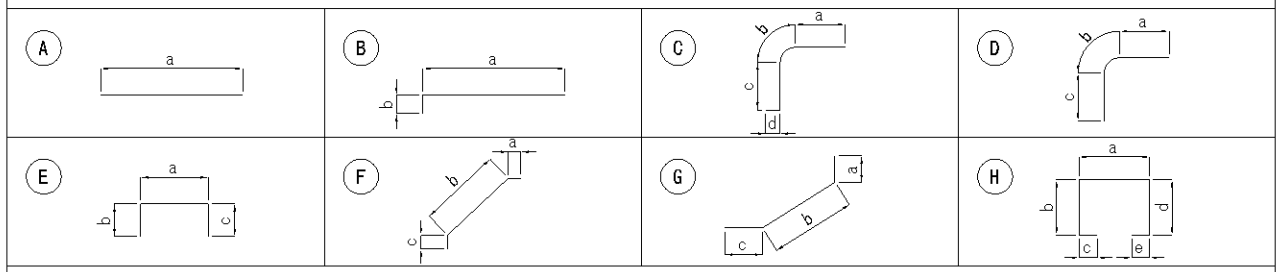

SCHEDULE OF REINFORCEMENT

LOCATION	BAR MARK	BAR SIZE	SPACING ctc(mm)	BAR SHAPE	DIMENSIONS (mm)OUT TO OUT a	b	c	d	e	LENGTH (mm)	NO. OF BARS	UNIT WT. (kg/m)	WEIGHT (kg)	REMARKS
BODY	B1	D20	AS SHOWN	C	1900	330	4322	300		6860	54	2.466	914	
	B2	D20	AS SHOWN	C	1300	330	4322	300		6260	54	2.466	834	
	B3	D20	AS SHOWN	D	1900	330	3790			6020	11	2.466	163	
	B4	D20	AS SHOWN	D	1300	330	3790			5420	11	2.466	147	
	B5	D20	AS SHOWN	A	2380					2380	65	2.466	381	
	B6	D20	AS SHOWN	D	1300	330	1500			3130	124	2.466	957	
	B7	D20	AS SHOWN	A	4800					4800	65	2.466	769	
	B8	D20	AS SHOWN	B	4532	300				4840	108	2.466	1289	
	B9	D20	AS SHOWN	A	4150					4150	18	2.466	184	
	B10	D20	AS SHOWN	F	300	1638	300			2240	130	2.466	718	
	B11	D12	AS SHOWN	A	10000					10000	94	0.888	835	
	B12	D12	AS SHOWN	A	6160					6160	94	0.888	514	
	B13	D12	AS SHOWN	H	532	432	180	432	180	1760	124	0.888	194	
	B14	D12	AS SHOWN	E	332	180	180			700	442	0.888	275	
	H1	D20	AS SHOWN	B	1500	300				1800	52	2.466	231	
	SUBTOTAL = 8405 kg													
FOOTING	F1	D16	AS SHOWN	E	1000	550	550			2100	108	1.578	358	
	F2	D16	AS SHOWN	E	1000	240	240			1480	130	1.578	304	
	F3	D16	AS SHOWN	B	300	240				540	44	1.578	37	
	F4	D12	AS SHOWN	A	10000					10000	20	0.888	178	
	F5	D12	AS SHOWN	A	6160					6160	20	0.888	109	
	F6	D12	AS SHOWN	A	1100					1100	20	0.888	20	
	F7	D12	AS SHOWN	B	200	180				380	4	0.888	1	
	SUBTOTAL = 1007 kg													
WING WALL	W1	D20	AS SHOWN	A	9000					9000	2	2.466	44	
	W2	D20	AS SHOWN	A	6600					6600	2	2.466	33	
	W3	D20	AS SHOWN	B	5400	300				5700	2	2.466	28	
	W4	D20	AS SHOWN	B	5284 ~1384	300				3640	28	2.466	251	
	W5	D20	AS SHOWN	F	300	1660	300			2260	28	2.466	156	
	W6	D16	AS SHOWN	A	9000					9000	2	1.578	28	
	W7	D16	AS SHOWN	A	6480					6480	2	1.578	20	
	W8	D16	AS SHOWN	B	5400	240				5640	2	1.578	18	
	W9	D16	AS SHOWN	B	5284 ~1384	240				3580	28	1.578	158	
	W10	D16	AS SHOWN	G	692	5556	1132			7380	4	1.578	47	
	W11	D12	AS SHOWN	A	4210					4210	8	0.888	30	
	W12	D12	AS SHOWN	A	4195 ~861					2530	68	0.888	153	
	W13	D12	AS SHOWN	E	300	710	710			1720	21	0.888	32	

BAR BENDING DIAGRAM

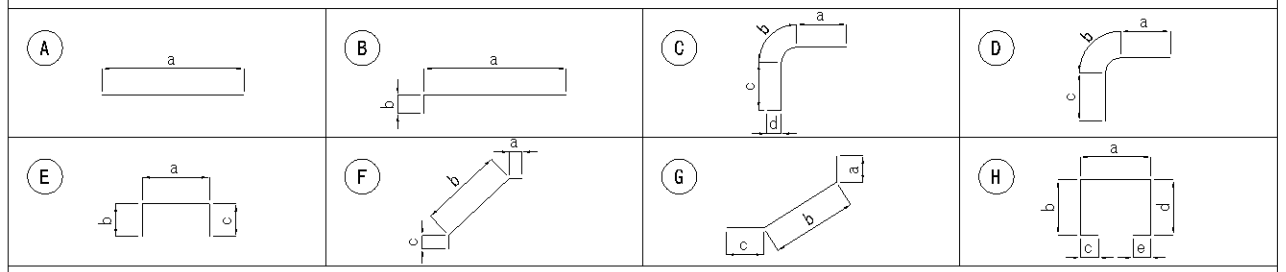

SCHEDULE OF REINFORCEMENT

LOCATION	BAR MARK	BAR SIZE	SPACING ctc(mm)	BAR SHAPE	DIMENSIONS (mm)OUT TO OUT a	b	c	d	e	LENGTH (mm)	NO. OF BARS	UNIT WT. (kg/m)	WEIGHT (kg)	REMARKS
WING WALL	W14	D12	AS SHOWN	E	300	180	180			660	40	0.888	23	
	W15	D12	AS SHOWN	E	331	180	180			700	32	0.888	20	
	W16	D12	AS SHOWN	E	361	180	180			730	50	0.888	32	
	SUBTOTAL = 1073 kg													
	TOTAL 1073 x 2 = 2146 kg													
	GRAND TOTAL 8405 kg + 1007 kg + 2146 kg = 11558 kg													

GENERAL ARRANGEMENT OF PILES SCALE 1:20

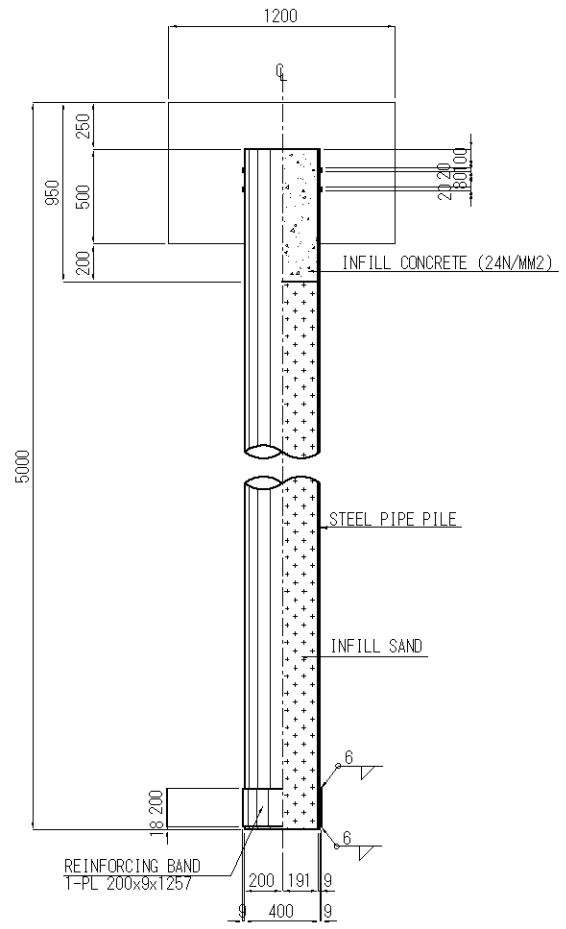

DETAIL OF TOP PILE SCALE 1:10

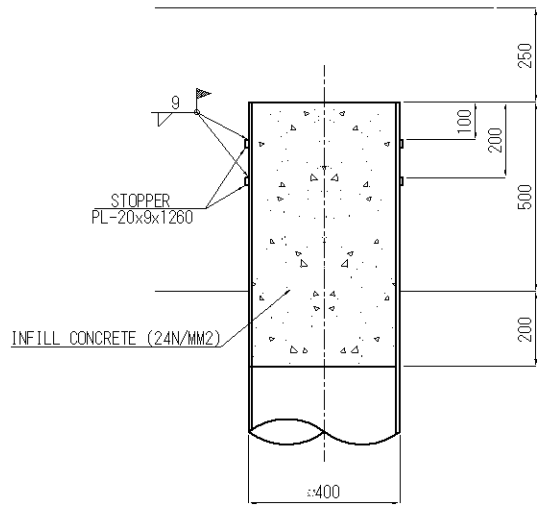

MATERIAL LIST

ITEM	MARK	MATERIAL	SIZE	LENGTH (mm)	QUANTITY (No)	UNIT WT. (kg/m)	WT/PC. (kg)	WEIGHT (kg)	REMARKS
STEEL PIPE PILE	SPP	SKK400	φ400x9	5000	22	86.8	434	9548	
SUBTOTAL = 9548 kg									
ATTACHMENT PARTS PER ONE PILE									
STOPPER	PL	SS400	20 x 9	1260	2	1.41	1.78	4	
REINFORCING BAND	PL	SS400	200 x 9	1257	1	14.1	17.72	18	
SUBTOTAL = 22 kg									
TOTAL 22 x 18 = 396 kg									
GRAND TOTAL 9548 kg + 396 kg = 9944 kg									

A6-43

KATAHIRA & ENGINEERS INTERNATIONAL

Designed by : Date :
Checked by : Date :

MINISTRY OF TRANSPORT OF THE REPUBLIC OF TAJIKISTAN

Approved by : Date :

THE PROJECT FOR REHABILITATION OF KURGAN TYUBE - DUSTI ROAD (PHASE-2)

TITLE : BAR ARRANGMENT OF NO.4 PORTAL RAHMEN BRIDGE (3)

SCALE : 1/50

DRAWING No: BR4-04

Rv.

GENERAL VIEW OF No.5 PORTAL RAHMEN BRIDGE

ELEVATION S=1:300

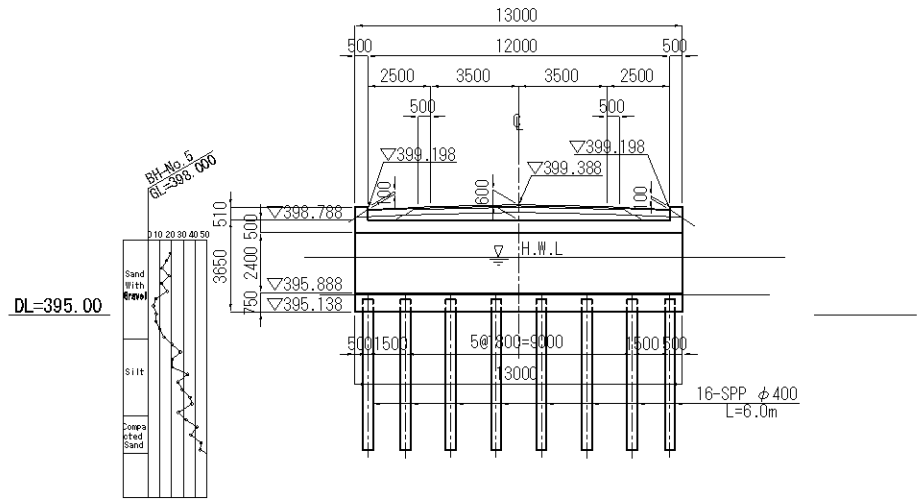

PORTAL RAHMEN S=1:200

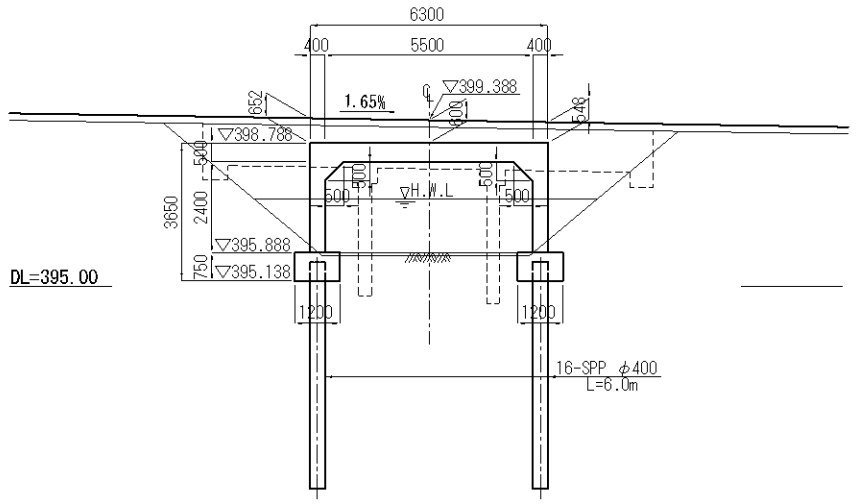

WING S=1:200

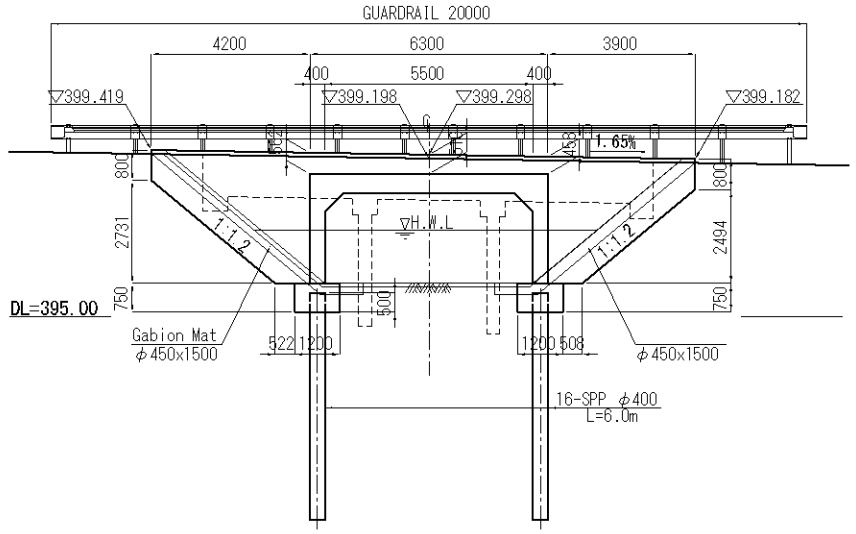

PLAN S=1:300

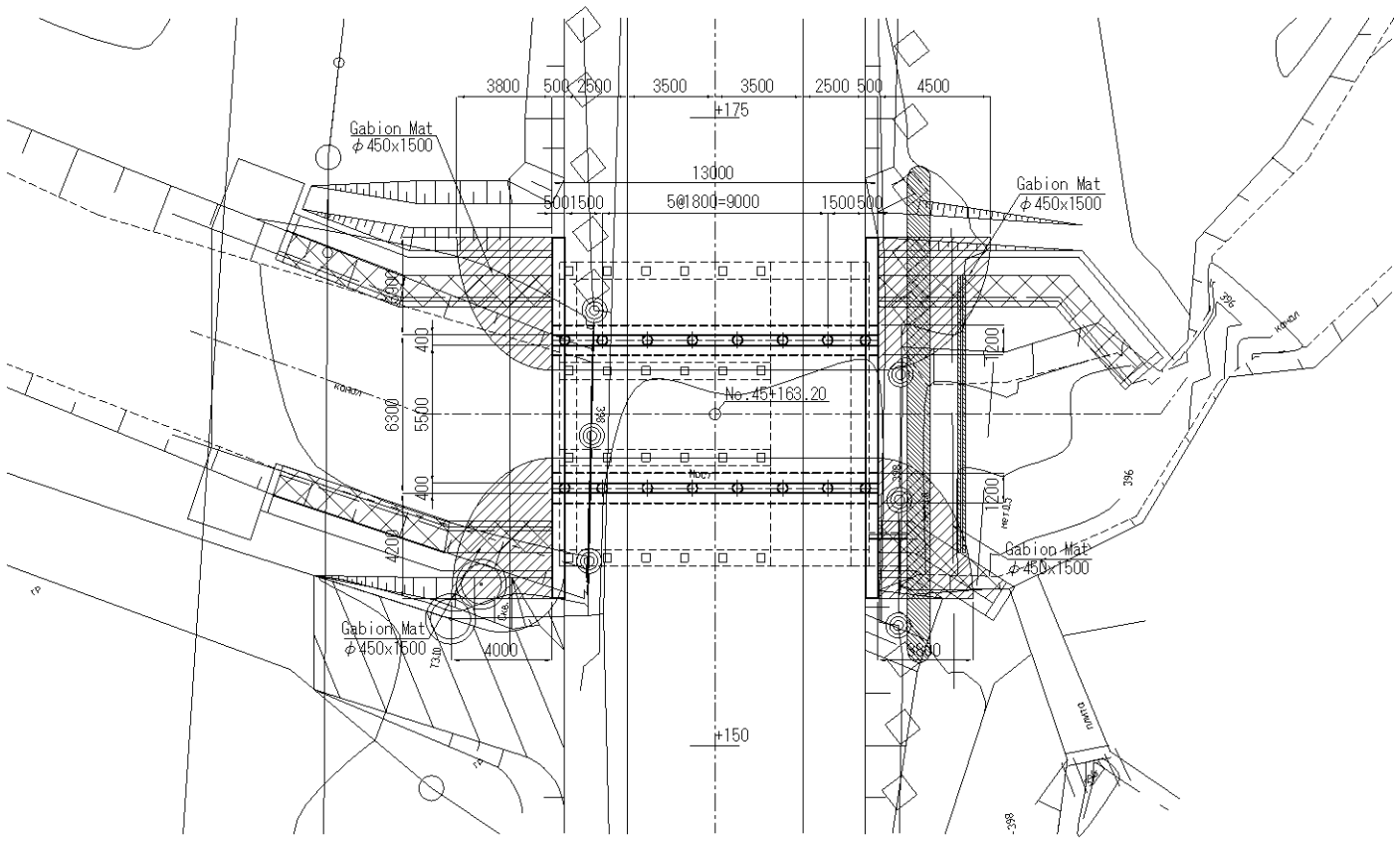

GENERAL SECTION S=1:300

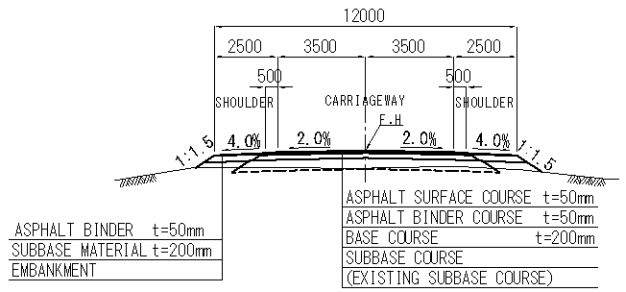

DESIGN CRITERIA

CONSTRUCTION WIDTH	INSIDE WIDTH(B)	B=5.50m
	CLEARANCE (H)	H=2.40m
VERTICAL LOAD	EARTH PRESSURE	LOADING SOIL
	LIVE LOAD	B-LIVE LOAD
HORIZONTAL LOAD	EARTH PRESSURE	AT REST
	COEFFICIENT	Ka=0.5
UNIT WEIGHT	BACKFILLING SOIL	18.0kN/m³
	REINRORCE CONCRETE	24.5kN/m³
IMPACT		i=0.3

MATERIAL STRENGTH

CONCRETE (24N/mm2)	DESING STRENGTH	$\sigma ck=24N/mm^2$
	ALLOWABLE COMPRE. STRESS	$\sigma ca=8N/mm^2$
	ALLOWABLE SHEARING STRESS	$\tau a=0.23N/mm^2$
	ALLOWABLE ADHESIVE STRESS	$\tau o=1.6N/mm^2$
REINRORCE BAR (SD295)	YIELD STRENGTH	$fy=295N/mm^2$
	ALLOWABLE TENSILE STRESS	$\sigma sa=180N/mm^2$
STEEL PIPE PILE (SKK400)	YIELD STRENGTH	$fy=235N/mm^2$
	ALLOWABLE TENSILE STRESS	$\sigma sa=140N/mm^2$

A6-44

KATAHIRA & ENGINEERS INTERNATIONAL

Designed by : Date :
Checked by : Date :

MINISTRY OF TRANSPORT OF THE REPUBLIC OF TAJIKISTAN

Approved by : Date :

THE PROJECT FOR REHABILITATION OF KURGAN TYUBE - DUSTI ROAD (PHASE-2)

TITLE : GENERAL VIEW OF NO. 5 PORTAL RAHMEN BRIDGE

SCALE : AS SHOWN

DRAWING No: BR5-01

Rv.

BAR ARRANGEMENT OF NO.5 PORTAL RAHMEN BRIDGE (1) SCALE 1:50

ELEVATION

1 - 1 2 - 2

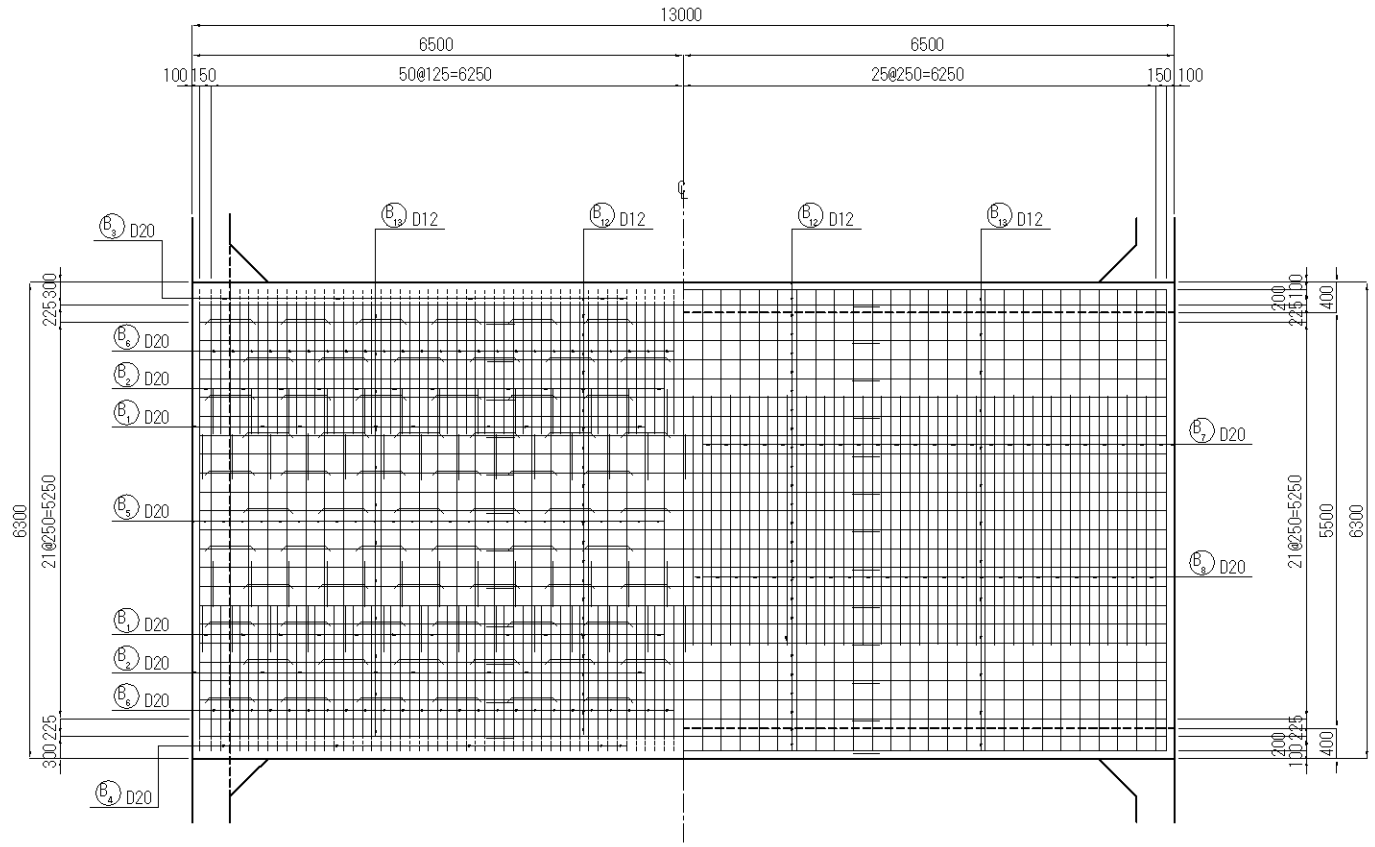

4 - 4 5 - 5

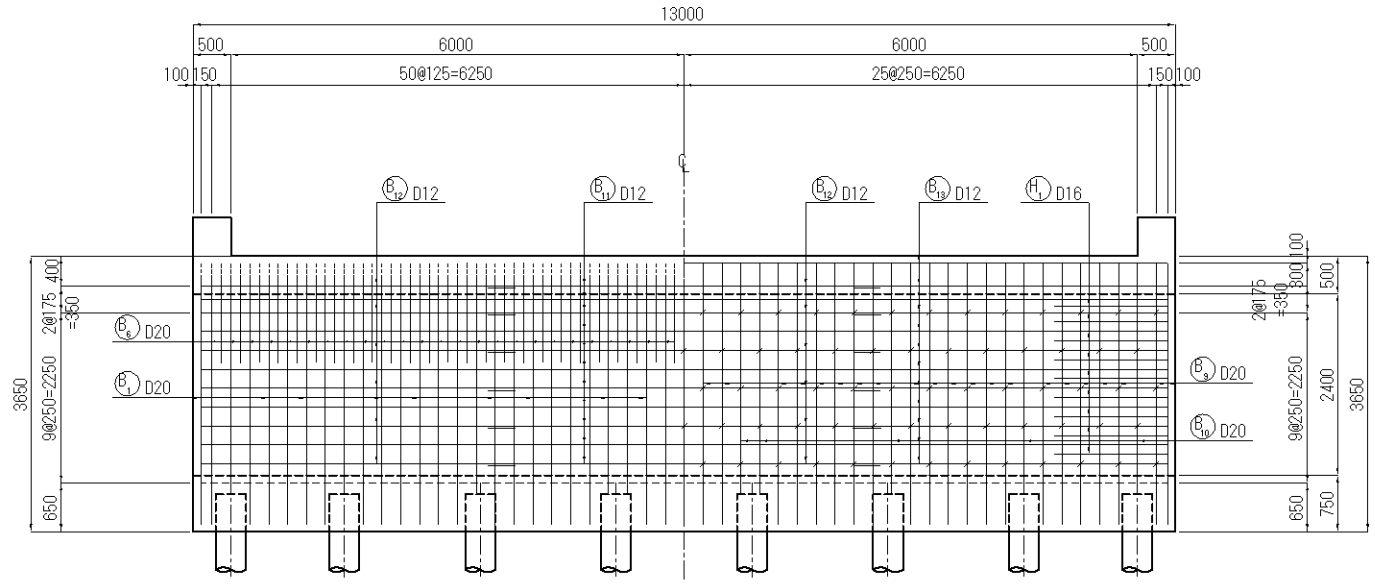

PLAN

6 - 6 7 - 7

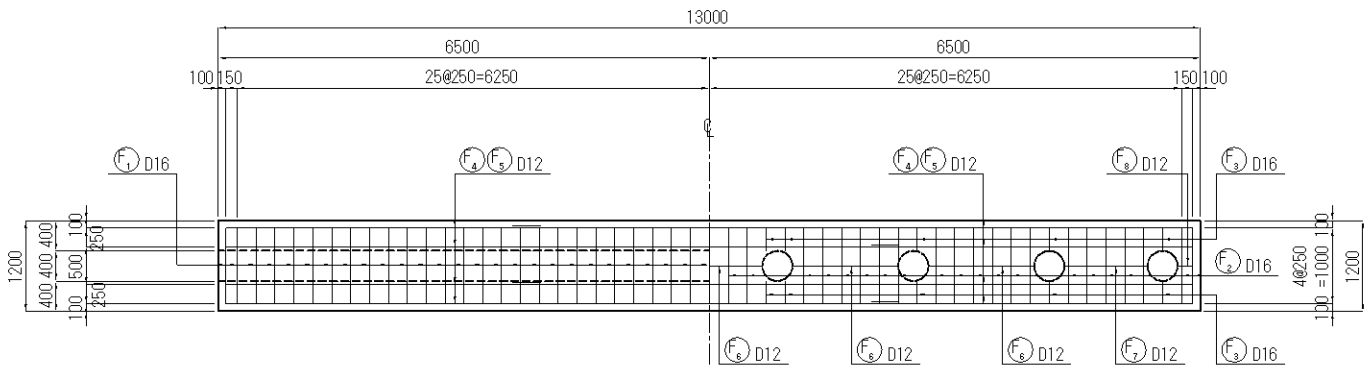

MARKING

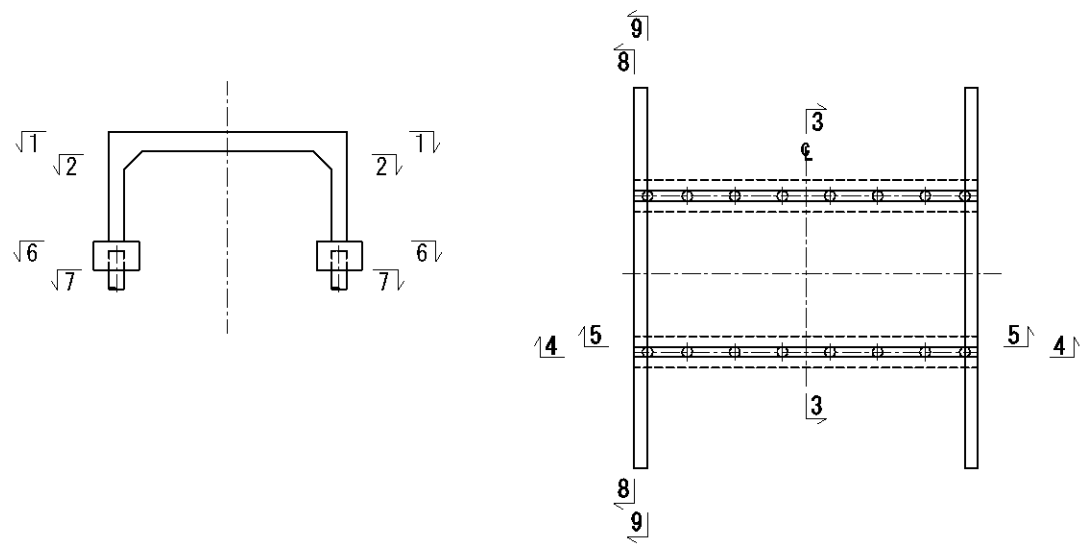

KATAHIRA & ENGINEERS INTERNATIONAL Designed by : Date : Checked by : Date :	MINISTRY OF TRANSPORT OF THE REPUBLIC OF TAJIKISTAN Approved by : Date :	THE PROJECT FOR REHABILITATION OF KURGAN TYUBE - DUSTI ROAD (PHASE-2)	TITLE : BAR ARRANGMENT OF NO.5 PORTAL RAHMEN BRIDGE (1)	SCALE : 1/50	DRAWING No: BR5-02

BAR ARRANGEMENT OF NO.5 PORTAL RAHMEN BRIDGE (2)

SCALE 1:50

SECTION
3 - 3

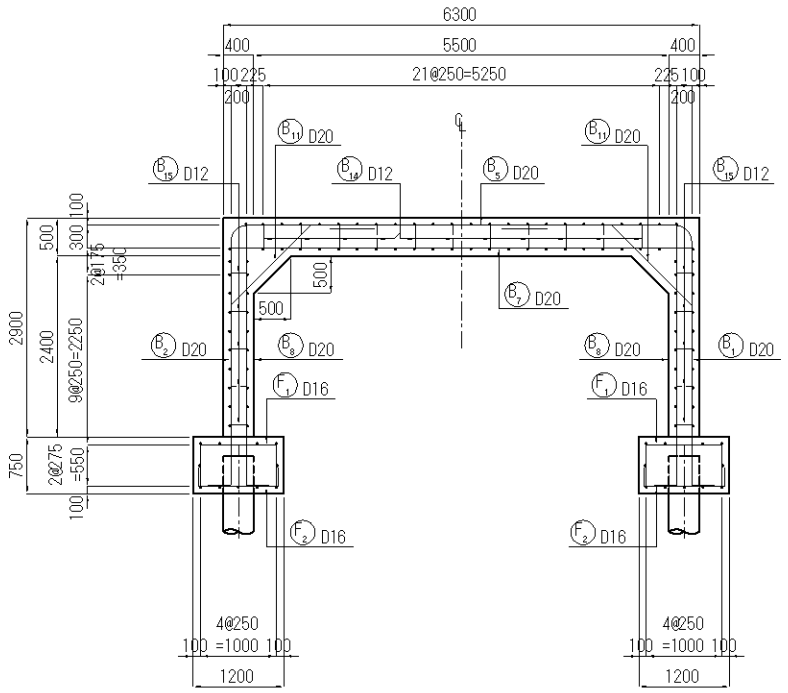

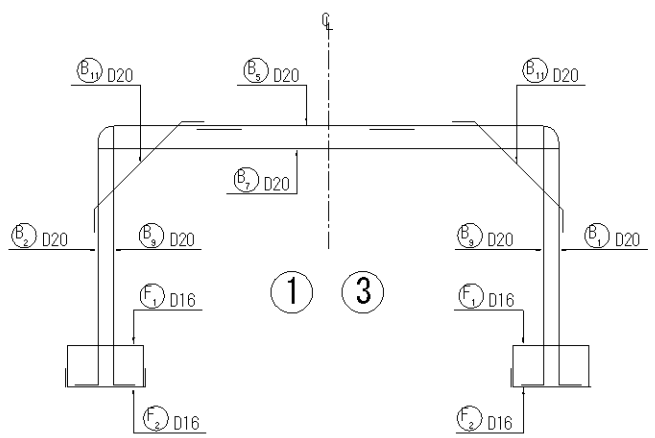

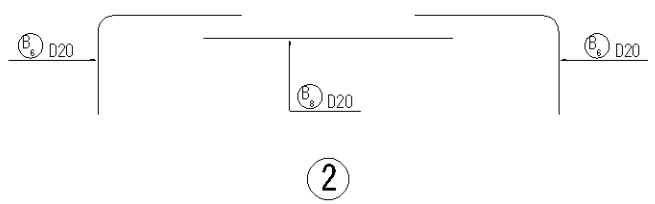

ELEVATION
8 - 8

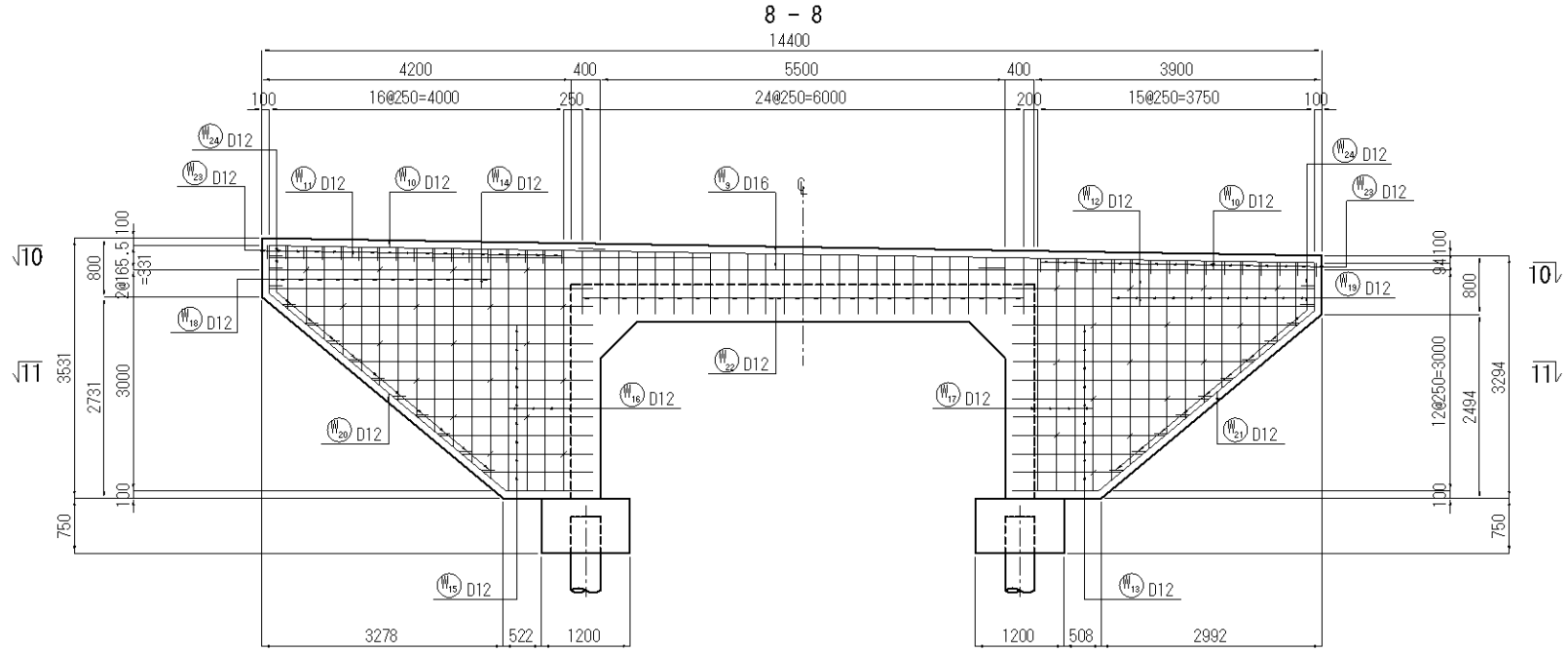

9 - 9

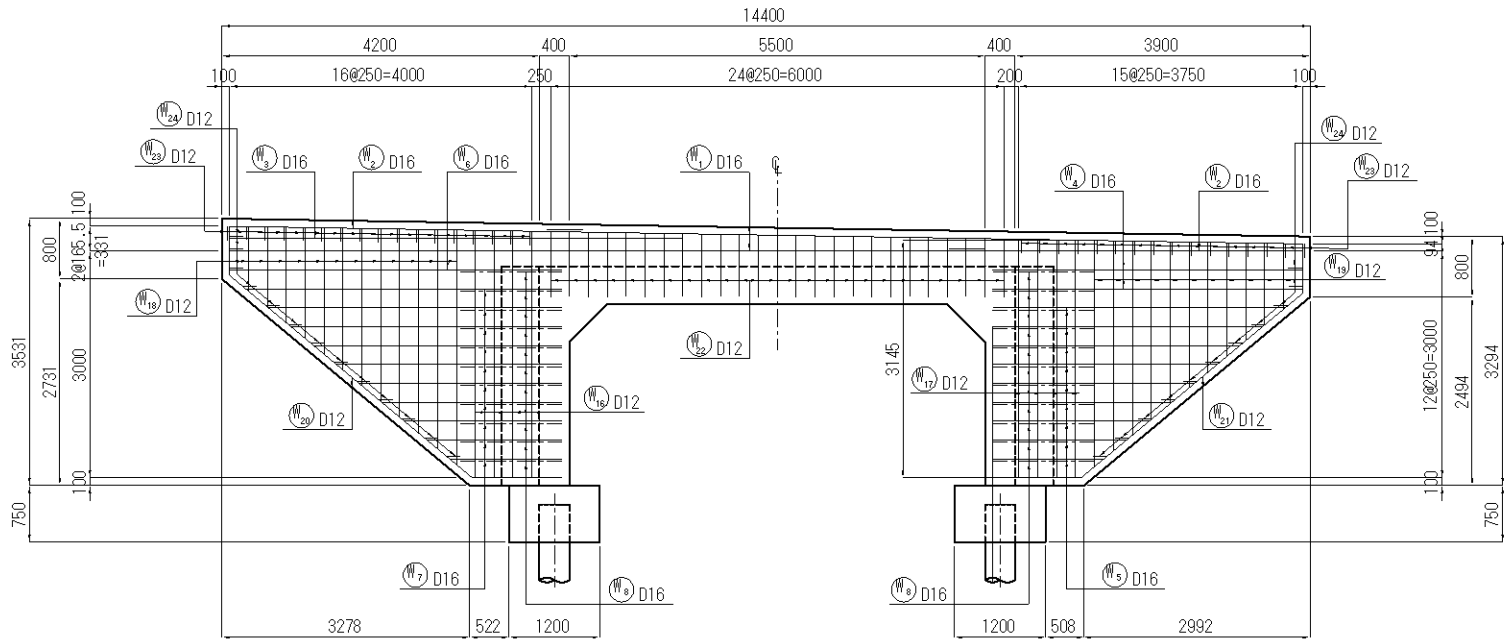

10 - 10

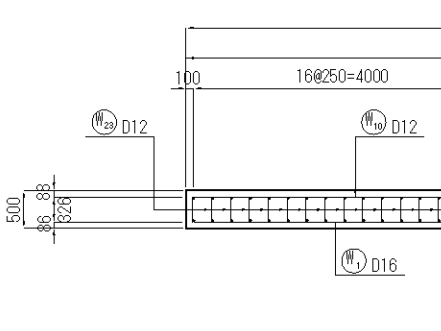

11 - 11

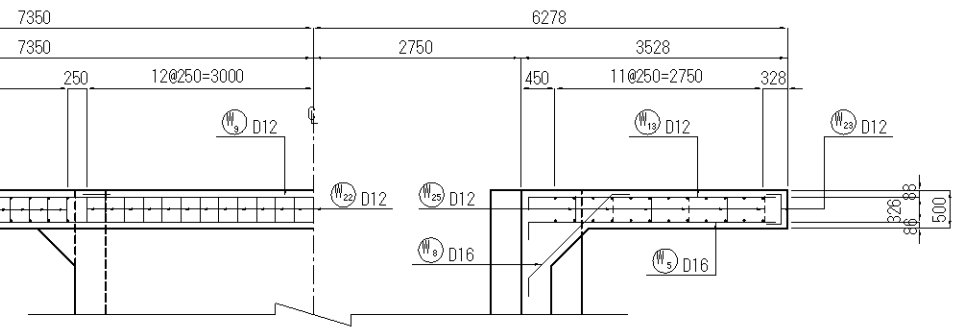

KATAHIRA & ENGINEERS INTERNATIONAL Designed by : Date : Checked by : Date :	MINISTRY OF TRANSPORT OF THE REPUBLIC OF TAJIKISTAN Approved by : Date :	THE PROJECT FOR REHABILITATION OF KURGAN TYUBE - DUSTI ROAD (PHASE-2)	TITLE : BAR ARRANGMENT OF NO.5 PORTAL RAHMEN BRIDGE (2)	SCALE : 1/50	DRAWING No: BR5-03

BAR ARRANGEMENT OF NO.5 PORTAL RAHMEN BRIDGE (3) SCALE 1:50

BAR BENDING DIAGRAM

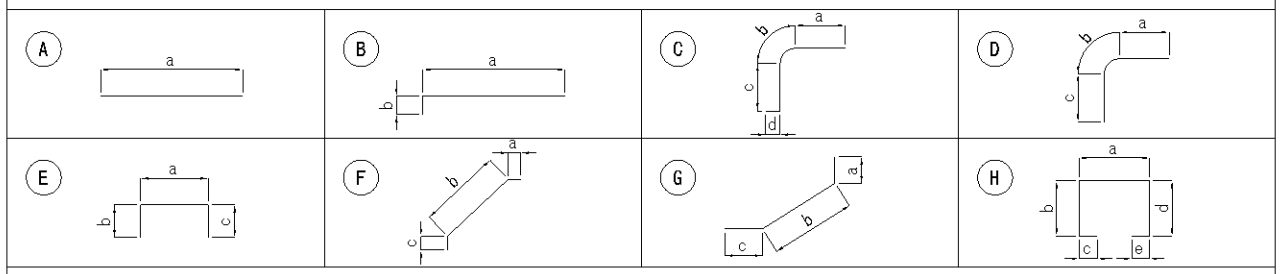

SCHEDULE OF REINFORCEMENT

LOCATION	BAR MARK	BAR SIZE	SPACING ctc(mm)	BAR SHAPE	DIMENSIONS (mm) OUT TO OUT a	b	c	d	e	LENGTH (mm)	NO. OF BARS	UNIT WT. (kg/m)	WEIGHT (kg)	REMARKS
BODY	B1	D20	AS SHOWN	C	2300	330	3222	300		6160	43	2.466	653	
	B2	D20	AS SHOWN	C	1700	330	3222	300		5560	43	2.466	590	
	B3	D20	AS SHOWN	D	2300	330	2840			5470	10	2.466	135	
	B4	D20	AS SHOWN	D	1700	330	2840			4870	10	2.466	120	
	B5	D20	AS SHOWN	A	2880					2880	53	2.466	376	
	B6	D20	AS SHOWN	D	1700	330	1100			3130	100	2.466	772	
	B7	D20	AS SHOWN	A	6100					6100	53	2.466	797	
	B8	D20	AS SHOWN	A	3300					3300	50	2.466	407	
	B9	D20	AS SHOWN	B	3432	300				3740	86	2.466	793	
	B10	D20	AS SHOWN	A	3050					3050	20	2.466	150	
	B11	D20	AS SHOWN	F	300	1497	300			2100	106	2.466	549	
	B12	D12	AS SHOWN	A	9000					9000	88	0.888	703	
	B13	D12	AS SHOWN	A	4260					4260	88	0.888	333	
	B14	D12	AS SHOWN	H	532	432	180	432	180	1760	138	0.888	216	
	B15	D12	AS SHOWN	E	332	180	180			700	256	0.888	159	
	H1	D20	AS SHOWN	B	1500	240				1740	36	2.466	154	
	SUBTOTAL = 6907 kg													
FOOTING	F1	D16	AS SHOWN	E	1000	550	550			2100	106	1.578	351	
	F2	D16	AS SHOWN	E	1000	240	240			1480	86	1.578	201	
	F3	D16	AS SHOWN	B	300	240				540	40	1.578	34	
	F4	D12	AS SHOWN	A	9000					9000	20	0.888	160	
	F5	D12	AS SHOWN	A	4260					4260	20	0.888	76	
	F6	D12	AS SHOWN	A	1400					1400	10	0.888	12	
	F7	D12	AS SHOWN	B	1100					1100	4	0.888	4	
	F7	D12	AS SHOWN	B	200	180				380	4	0.888	1	
	SUBTOTAL = 839 kg													
WING WALL	W1	D16	AS SHOWN	A	10000					10000	2	1.578	32	
	W2	D16	AS SHOWN	A	4682					4690	2	1.578	15	
	W3	D16	AS SHOWN	A	6000					6000	1	1.578	9	
	W4	D16	AS SHOWN	B	4100	240				4340	2	1.578	14	
	W5	D16	AS SHOWN	B	3871 ~1471	240				2920	9	1.578	41	
	W6	D16	AS SHOWN	B	4400	240				4640	1	1.578	7	
	W7	D16	AS SHOWN	B	4156 ~1486	240				3080	10	1.578	49	
	W8	D16	AS SHOWN	F	240	1518	240			2000	22	1.578	69	
	W9	D12	AS SHOWN	A	10000					10000	2	0.888	18	
	W10	D12	AS SHOWN	A	4562					4570	2	0.888	8	
	W11	D12	AS SHOWN	A	6000					6000	1	0.888	5	
	W12	D12	AS SHOWN	B	4100	180				4280	2	0.888	8	
	W13	D12	AS SHOWN	B	3871 ~1471	180				2860	9	0.888	23	

BAR BENDING DIAGRAM

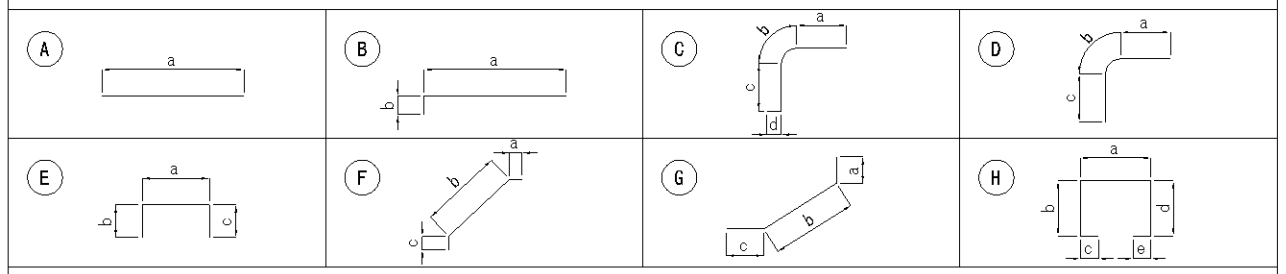

SCHEDULE OF REINFORCEMENT

LOCATION	BAR MARK	BAR SIZE	SPACING ctc(mm)	BAR SHAPE	DIMENSIONS (mm) OUT TO OUT a	b	c	d	e	LENGTH (mm)	NO. OF BARS	UNIT WT. (kg/m)	WEIGHT (kg)	REMARKS
WING WALL	W14	D12	AS SHOWN	B	4400	180				4580	1	0.888	4	
	W15	D12	AS SHOWN	B	4186 ~1436	180				3020	10	0.888	27	
	W16	D12	AS SHOWN	A	3264					3270	8	0.888	23	
	W17	D12	AS SHOWN	A	3145					3150	8	0.888	22	
	W18	D12	AS SHOWN	A	3102 ~856					1980	24	0.888	42	
	W19	D12	AS SHOWN	A	2992 ~867					1930	22	0.888	38	
	W20	D12	AS SHOWN	G	652	4183	1186			6030	2	0.888	11	
	W21	D12	AS SHOWN	G	655	3812	1171			5640	2	0.888	10	
	W22	D16	AS SHOWN	E	300	859 ~760	859 ~760			1920	25	1.578	76	
	W23	D12	AS SHOWN	E	300	180	180			660	33	0.888	19	
	W24	D12	AS SHOWN	E	326	180	180			690	24	0.888	15	
	W25	D12	AS SHOWN	E	354	180	180			720	33	0.888	21	
	SUBTOTAL = 606 kg													
	TOTAL 606 x 2 = 1212 kg													
	GRAND TOTAL 6907 kg + 839 kg + 1212 kg = 8958 kg													

GENERAL ARRANGEMENT OF PILES SCALE 1:20

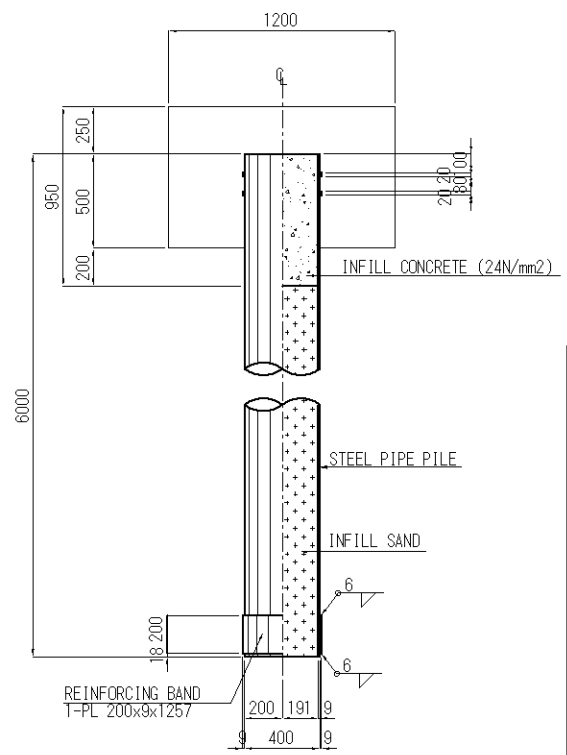

DETAIL OF TOP PILE SCALE 1:10

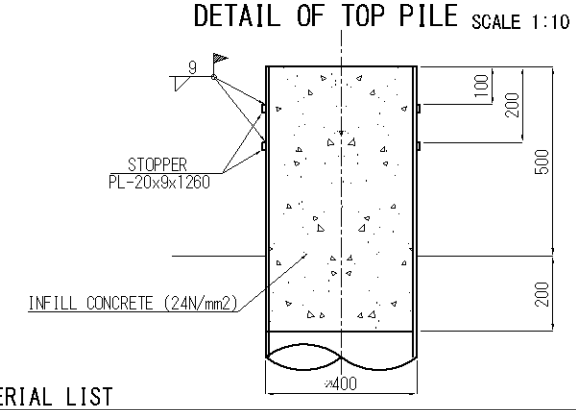

MATERIAL LIST

ITEM	MARK	MATERIAL	SIZE	LENGTH (mm)	QUANTITY (No)	UNIT WT. (kg/m)	WT/PC. (kg)	WEIGHT (kg)	REMARKS
STEEL PIPE PILE	SPP	SKK400	φ400x9	6000	16	86.8	521	8336	
SUBTOTAL = 8336 kg									
ATTACHMENT PARTS PER ONE PILE									
STOPPER	PL	SS400	20 x 9	1260	2	1.41	1.78	4	
REINFORCING BAND	PL	SS400	200 x 9	1257	1	14.1	17.72	18	
SUBTOTAL = 22 kg									
TOTAL 22 x 18 = 396 kg									
GRAN TOTAL 8336 kg + 396 kg = 8732 kg									

A6-47

KATAHIRA & ENGINEERS INTERNATIONAL
Designed by : Date :
Checked by : Date :

MINISTRY OF TRANSPORT OF THE REPUBLIC OF TAJIKISTAN
Approved by : Date :

THE PROJECT FOR REHABILITATION OF KURGAN TYUBE - DUSTI ROAD (PHASE-2)

TITLE : BAR ARRANGMENT OF NO.5 PORTAL RAHMEN BRIDGE (3)

SCALE : 1/50

DRAWING No: BR5-04

Rv.