資料－５　技術協議録(Technical Memorandum)

CONFIDENTIAL

TECHNICAL MEMORANDUM
FOR
THE 2nd PREPARATORY SURVEY
ON
THE PROJECT FOR REINFORCEMENT OF POWER DISTRIBUTION IN ZANZIBAR ISLAND
IN
THE UNITED REPUBLIC OF TANZANIA

AGREED UPON BETWEEN

ZANZIBAR ELECTRICITY CORPORATION (ZECO)

AND

JICA PREPARATORY SURVEY TEAM

Zanzibar Island, October 18th, 2010

Mr. Kiyofusa TANAKA
Chief Consultant
JICA Preparatory Survey Team
Yachiyo Engineering Co., Ltd.

Mr. HASSAN A. MBAROUK
Acting General Manager
Zanzibar Electricity Corporation
The United Republic of Tanzania

Zanzibar Electricity Corporation (hereinafter referred to as "ZECO") and JICA Preparatory Survey Team for the Project for Reinforcement of Power Distribution in Zanzibar Island in the United Republic of Tanzania (hereinafter referred to as "the Team") had series of technical discussion to form a mutual understanding of the scope and outline design of the Project at the stage of 2nd preparatory survey and both parties agreed to record the following points as a conclusion of the discussions.

1. Component of the Project

ZECO and the Team confirmed and agreed the project component as shown below, as the scope of the Project and basic conditions for further studies and works of detailed design, project cost estimation, draft final report, etc. to be done by the Team in Japan.

Priority	Original Component Requested by the Tanzania side	Revised Component by First Field Survey
A	(1) Expansion of 33 kV Mtoni Substation a. Extension of 33 kV busbar for new feeder from Mtoni to Tunguu (Renovation of bus bar) b. Installation of 33 kV circuit breaker complete with control accessories for feeder from Mtoni to Tunguu c. Extension of 33 kV busbar for feeder from Mtoni to New Mtoni S/S d. Extension of 33 kV busbar for new feeder from Mtoni to Mahonda e. Installation of 33 kV circuit breaker complete with control accessories for feeder from Mtoni to Mahonda f. Rehabilitation of Mtoni Control room which includes; - Replacement of 33 kV old relays and control panels for existing and new constructed feeders - Replacement of all 33 kV measuring equipment for existing and new constructed feeders	(1) Expansion of 33 kV Mtoni Substation a. Installation of New 33 kV switchgear b. Installation of New Control Room
C	(2) Installation of 33/11 kV Substation at Welezo a. 5 MVA transformers with on-load tap changer: 2 sets b. 33 kV incoming transformer feeders including 33 kV circuit breaker with all its control accessories: 2 sets c. Installation of 33 kV incoming busbar with bus coupler: 1 set d. Installation of 11 kV indoor outgoing switchgear including 11 kV circuit breaker with all its control accessories: 2 sets e. 50 m Underground cable from 11 kV busbar to the first pole: 2 sets f. 150 m Overhead distribution line from the first pole to the terminal point: 2 sets	(2) Installation of 33/11 kV Substation at Welezo a. 5 MVA transformers with on-load tap changer: 2 sets b. 33 kV incoming, outgoing, bus coupler, PT & Station Transformer feeders: 7 cubicles c. 11 kV incoming, outgoing, bus coupler feeders : 5 cubicles d. Underground cable from 33/11 kV switchgear to the first pole: 4 sets e. Control and metering panels f. Control room

Priority	Original Component Requested by the Tanzania side	Revised Component by First Field Survey
B	(3) Installation of 33/11 kV Substation at Mwanyanya a. 5 MVA transformers with on-load tap changer: 2 sets b. 33 kV incoming transformer feeders including 33 kV circuit breaker with all its control accessories: 2 sets c. Installation of 33 kV incoming busbar with bus coupler: 1 set d. Installation of 11 kV indoor outgoing switchgear including 11 kV circuit breaker with all its control accessories: 2 sets e. 50 m Underground cable from 11 kV busbar to the first pole: 2 sets	(3) Installation of 33/11 kV Substation at Mwanyanya a. 5 MVA transformers with on-load tap changer: 2 sets b. 33 kV incoming, outgoing, bus coupler, PT & Station Transformer feeders: 7 cubicles c. 11 kV incoming, outgoing, bus coupler feeders : 5 cubicles d. Underground cable from 33/11 kV switchgear to the first pole: 4 sets e. Control and metering panels f. Control room
C	(4) Installation of 33 kV Distribution line from Mtoni to Tunguu a. Parallel circuit to South feeder from Mtoni to Tunguu: 19 km (route length) b. Installation of Auto-recloser for Chwaka and Tunguu feeders at Ubago	(4) Installation of 33 kV Distribution line from Mtoni to Tunguu: 22 km (route length, ACSR 100mm^2)
B	(5) Installation of 33 kV Distribution line from Mtoni to Mahonda a. Parallel circuit to North feeder from Mtoni to Mahonda 19 km (route length) b. Installation of Auto-recloser switches for Bumbwini and Selem feeders at Mfenesin	(5) Installation of 33 kV Distribution line from Mtoni to Mahonda: 20.3 km (route length, ACSR 100mm^2)
C	(6) Replacement of 33 kV Distribution line from Mtoni to Fumba Replacement of conductors from 50 mm^2 to 150 mm^2, only the part of trunk 33 kV line except tee off (intake line after T junction): 30 km (route length) * At the connection point to Mpendae Substation, the Project does not include cable from dead end pole to Substation	(6) Replacement of 33 kV Distribution line from Mtoni to Fumba: 38.5 km (route length, from ACSR 50 mm^2 to ACSR 100mm^2) * At the connection point to Mpendae Substation, the Project does not include cable from dead end pole to Substation
D	(7) Executed by ZECO, material supplied by JICA (7.1) Material supply (procured locally in principle) a. Line conductors of ACSR 100 mm^2 for repairs of 33 kV and 11 kV distribution lines: 40 km (route length) b. Supply of ABC conductor for 11 kV with accessories: 24 km c. Supply of XLPE conductor for low voltage with all accessories - 4 x 95 mm^2 XLPE conductor: 20 km - 2 x 25 mm^2 XLPE conductor: 10 km d. Underground cable 150 mm^2 to complete ring circuit: 6 km e. Auto-recloser circuit breaker for the 33 kV overhead distribution line: 4 sets f. Auto-recloser circuit breaker for the 11 kV overhead distribution line: 3 sets g. Load break switch for 33 kV overhead	(7) Procurement of equipment and materials 1) Equipment and Materials a. ACSR 100 mm^2 for repairs of 11 kV distribution lines: 37 km (route length) b. ABC conductor for 11 kV with accessories: 24 km c. XLPE conductor for low voltage with all accessories - 4 x 95 mm^2 XLPE conductor: 20 km - 2 x 25 mm^2 XLPE conductor: 10 km d. Underground cable 150 mm^2 to complete ring circuit: 6 km e. Auto-recloser circuit breaker for the 33 kV overhead distribution line: 4 sets f. Auto-recloser circuit breaker for the 11 kV overhead distribution line: 3 sets g. Load break switch for 33 kV overhead distribution line: 15 sets h. Load break switch for 11 kV overhead distribution line: 4 sets

Priority	Original Component Requested by the Tanzania side	Revised Component by First Field Survey
	distribution line: 15 sets h. Load break switch for 11 kV overhead distribution line: 4 sets i. 30/0.4 kV distribution transformers - 200 kVA: 5 sets - 315 kVA: 5 sets j. 11/0.4 kV distribution transformers - 250 kVA: 5 sets - 315 kVA: 5 sets	i. 33/0.4 kV distribution transformers - 200 kVA: 5 sets - 315 kVA: 5 sets j. 11/0.4 kV distribution transformers - 250 kVA: 5 sets - 315 kVA: 5 sets
	(7.2) Construction equipment a. Truck with cranes (7 tonnes): 3 pcs b. Digger and pole erector truck: 2 pcs c. High voltage tester (megger tester): 3 pcs d. Transformer oil measuring equipment: 3 pcs e. Cable fault locator with its pulse generator: 2 pcs f. CPC 100 for CT's, VT's transformers and relay testing: 1 pc g. Pole erection jacks: 4 pcs	2) Construction Vehicles and Tools a. Truck with cranes (7 tonnes): 3 pcs b. Digger and pole erector truck: 2 pcs c. High voltage tester (megger tester): 3 pcs d. Transformer oil measuring equipment: 3 pcs e. Cable fault locator with its pulse generator: 2 pcs f. Instrument for injection for CT, VT and relay testing: 1 pc g. Pole erection jacks: 4 pcs

2. Details of Undertakings by ZECO

The following items are the undertakings of ZECO during the preparatory survey and implementation stages.

(1) Preparatory Survey Stage

No.	Details of undertakings	Action by	Due
1	Decision making on EIA certification	DoE& ZECO	End of Oct. '10
2	PAP's meeting for resettlement site	DoE& ZECO	Middle of Dec. '10
3	Preparation of RAP and approval of RAP by PAP's	DoE &ZECO	1st of Nov. to End of Dec. '10
4	Approval of RAP by Tanzanian government	MoWCL	End of Dec. '10
5	Approval of the project by the Japanese Cabinet	MoFA	End of Mar. '11

(2) Implementation Stage

No.	Details of undertakings	Action by	Due
1	Securing the land and ownership of the Project sites/areas to construct the new substations and the new distribution lines, temporary storage yard and site offices, including securing temporary space of a winch and a drum for the installation works of distribution line and traffic controls.	ZECO	See Annex-VIII
2	Ground leveling, bush clearing and removal of obstructions on the Project sites/areas to construct the new substations and the new distribution lines	ZECO	See Annex-VIII
3	Installation of fences and gates for the Project sites of the new substations for permanent use at the completion of the Project	ZECO	See Annex-VIII
4	Parking area for the work period	ZECO	See Annex-VIII
5	Road works Outside the Project sites including access road	ZECO	See Annex-VIII

HA

No.	Details of undertakings	Action by	Due
	for transportation of the equipment and materials to the Mwanyanya Substation and 33kV distribution lines including removal work of obstacles.		
6	Electrical, water supply and sanitary works for the Project sites, site offices and storage yard	ZECO	See Annex-VIII
	(1) Electrical works (extend the existing low voltage power and install integrating meter up to the primary side)		
	(2) Water supply works (City water extension)		
	(3) Sewage mains works (sanitary sewage and storm water)		
7	Handling of transportation and customs clearance procedures and taxes	ZECO	See Annex-VIII
	(1) Tax exemption and customs clearance procedures at the port of unloading in the recipient country		
	(2) Exemption or bearing of domestic value added tax on local procurement		
8	Taking necessary measures for obtaining the permissions as below in prior to the commencement of the implementation of the Project: - Permission(s) necessary for installation works - Permission(s) necessary for entering into the restricted areas	ZECO	See Annex-VIII
9	Relocating existing telephone line of the Welezo Substation	ZECO	See Annex-VIII
10	Temporary power outage work during work period	ZECO	See Annex-VIII
11	Final connection works between the new and the existing distribution lines of the following sections: - Between the new 11kV outgoing feeders and the existing 11kV distribution lines at the new substations - Between the new 33kV terminal pole and the existing 33kV distribution lines at the connection points (Terminal materials for the final connection works shall be provided by the Japanese side.)	ZECO	See Annex-VIII
12	Replacing the existing 11kV intermediate pole to 11kV section pole at the appointed location near Mwanyanya Substation for proper and safe connection of the outgoing feeders from the Substation	ZECO	See Annex-VIII
13	Replacing the existing distribution transformers(including Cut-out SW. etc) on the existing 33kV distribution lines to the new 33kV distribution lines on Fumba route	ZECO	See Annex-VIII
14	Storing of Testing instruments, spare parts (Testing instruments will be utilized for installation work.)	ZECO	See Annex-VIII
15	Operation and maintenance of facilities and the procured equipment	ZECO	See Annex-VIII
16	Removal of trees, etc. after the completion of the Project	ZECO	See Annex-VIII
17	Payment of the following commissions to the Japanese Bank for banking services based upon the Banking Arrangement: - Advising commission of Authorization to Pay (JP¥10,000 or equivalent) - Payment commission (0.1% of the Grant Amount)	ZECO	See Annex-VIII

3. Technical Specifications and Outline Design Drawings

Design conditions to be applied to and the technical specifications of the Project components are shown in Annex-I. Outline design drawings such as single line diagram and plot plan of each substation, an elevation and floor plan of a control building at Mtoni substation, etc. are shown in Annex-II. 33kV distribution line routes are shown in Annex-IV & V.

Installation procedure for switching in Mtoni substation shown in Annex-VII

4. Tentative Implementation Schedule

Tentative implementation schedule of the Project supposing that the Exchange of Notes (E/N) will be concluded in April 2011, is shown in Annex-VIII. The schedule is provisional and might be changed later. However, the construction period shall be within 24 months after the E/N according to the Japan's Grant Aid scheme.

However, all the information and components described in this memorandum including final decision of the Project sites/area will be eventually determined after modification or further examination in Japan and consultations with the concerned officials of the Government of Japan. Also it is noted that <u>all information in this memorandum shall be classified as confidential, and no information shall be disclosed to any other parities.</u>

(end)

Attachment

Annex-I:	Technical Specifications
Annex-II:	Outline Design Drawings
Annex-III:	Project Sites
Annex-IV:	Route Map of Proposed 33kV Distribution Line (North Route)
Annex-V	Route Map of Proposed 33kV Distribution Line (South & Fumba Route)
Annex-VI	Detail of 33kV Distribution Route
Annex-VII	Installation Procedure for Switching in Mtoni Substation
Annex-VIII	Tentative Implementation Schedule
Annex-IX	Financial Plan
Annex-X	ZECO Organization Chart
Annex-XI	EIA Schedule
Annex-XII	Power Demand Forecast

HA

Design Conditions and Technical Specifications

(1) Design Conditions

Design conditions to be applied to the Project are described as follows.

(i) Climatic Conditions

Natural conditions for equipment and facilities design are described as follows.

Region		UNGUJA (Zanzibar)
Altitude		Approx. at sea level
Ambient Temperature	Maximum	40℃
	Minimum	15℃
	Mean	27℃
Maximum Humidity		96%
Max. Wind Velocity		32 knots (16m/s)
Monthly Maximum Rainfall		700mm (April)
Seismic Force		Horizontal 0.1G
Soil Bearing Capacity		5 ton/m^2

For the design of the equipment and materials, such conditions as, altitude, high temperature and high humidity shall be considered.

(ii) Basic Electrical Design Conditions

Basic conditions for designing electrical equipment and materials are described as follows.

Item	Distribution System		Station Service Power	
Nominal Voltage	33kV	11kV	400-230V AC	110V DC
Maximum Voltage	36kV	12kV	440-253V AC	125V DC
Frequency	50Hz			N/A
Maximum Short Circuit Capacity	25kA(1sec.)	25kA (1sec.)	N/A	
Lightning Impulse Withstand Voltage (LIWV)	170kV	75kV	N/A	
Earthing System	Effective Earthing System		N/A	
Minimum Creepage Distance of Insulator	25mm/kV		N/A	
Minimum Clearance of Conductor	(See Note 1)		N/A	
Phase to Ground (mm)	500	300	N/A	
Phase to Phase (mm)	900	600	N/A	
Clearance and Wayleave	(See Note 2)		N/A	
Protection Class (IP)	(See Note 3)			

(Notes)

1. The minimum clearance of conductor for distribution lines shall be determined in accordance with relevant standards and regulations. The minimum clearance of busbar for 33kV and 11kV switchgear cubicles shall be determined by manufacturer's

HA

standards.

2. The height and clearance of transmission and distribution lines shall be determined in accordance with the requirements of ZECO, Department of Roads, etc. described as follows. However, in case that special arrangement is required, ZECO shall consult with relevant parties to obtain necessary permission.

Item	33/11kV
Height of Conductor	
General Area (m)	6
Road (m)	6
Clearance between conductor and house (m)	3
Clearance between supporting structure and road center	(Normal/Compact)
Trunk Road (m)	15/8
Feeder Road (m)	15/8
Collector Road (m)	10/7
Community Road (m)	10/7

3. Protection class (IP) for 33kV switchgear cubicles, 11kV switchgear cubicles, low voltage panels, control panels and protection relay panels are as follows.

   Outdoor: IP43
   Indoor: IP20

(iii) Other Electrical Systems

1) Colour Coding
   Applicable colour-coding shall be of IEC standard, such as Red, Yellow, Blue and Black.

2) Insulator material and colour: Porcelain, brown

3) Requirement for Panels (If any)
   Panels (Cubicles) shall be self standing type as a basis and constructed by using steel plate considering the concept as follows:

Usage	Thickness of Plate
Panels	Not less than 2.3 mm

(2) Applicable Codes/Standards and Units

With regard to the Project design, relevant international standards such as IEC and ISO and Japanese standards are applied to the major functions of equipment and facilities in conformity with the existing electrical equipment and facilities in Tanzania. For the system of units, the International System of Units (SI) is applied.

- International Electrotechnical Commission (IEC): Applied to major functions of electrical products in general

- International Standardization Organization (ISO): Applied to performance evaluation of industrial products in general
- Japanese Industrial Standard (JIS): Applied to industrial products in general
- Japanese Electrotechnical Commission (JEC): Applied to electrical products in general
- Standards for Japan Electrical Manufacturer's Association (JEM): Same as above
- Japanese Electrical Wire and Cable Maker's Association (JCS): Applied to electric wire and cables
- Relevant Technical Standards on Electrical Installation: Applied to electrical work in general

(3) Basic Plan of Components

(i) Expansion of 33kV Mtoni Substation

(a) Outline of the Components

Two (2) outdoor type step down transformers (33/11kV, 25MVA each) and Station transformers shall be installed at the area. Indoor type 33kV switchgear cubicles, 33kV Control/Metering panels, battery/charger and a low voltage panel shall be installed inside a control building.

33/11kV cables of armored type shall be directly buried under the ground about 0.6 meter deep.

33kV armored type cables to connect an existing gantry and new 132/33kV Mtoni Substation within the substation shall be installed by Japanese side in order to avoid interruption in power supply during the construction work. Refer to attached document "Installation Procedure for Switching in Mtoni Substation" in Annex-VII

Low voltage and control cables shall be installed inside cable trench and conduit.

The earthing resistance of the substation site is supposed to be less than 10 ohm for design purposes.

Modification of the existing gantry structure shall be made for connection to the new 33kV Mtoni Substation by installing additional galvanized steel structure, 33kV line switches, 33kV lightning arresters, disc insulators, etc.

The new 33 kV switchgears to be procured under the Project shall be prepared to the SCADA signal terminal.

(b) Technical Specifications of Major Equipment and Materials

Regarding electrical system and layout of the substation refer to attached drawings (DWG. No. S-E-01 and S-L-01 in Annex-II).

Technical specifications of major equipment and materials are shown in Table-1 of the Attachment.

(ii) Installation of 33/11kV Substation at Welezo

(a) Oultline of the Components

Two (2) new step down transformers (33/11kV, 5MVA each), indoor type 33kV/11kV switchgear cubicles, 33/11kV Control/Metering panels, battery/charger and a low voltage panel, two (2) sets of 33kV dead end poles (33kV incoming) and two (2) sets of 11kV dead end poles (11kV outgoing) shall be installed at the area.

33kV and 11kV cables of armored type shall be directly buried under the ground about 0.6 meter deep.

Low voltage and control cables shall be installed inside cable trench and conduit.

The earthing resistance of the substation site is supposed to be less than 10 ohm for design purposes.

The existing telephone lines shall be relocated by ZECO.

The new 33/11 kV switchgears and Control Panel to be procured under the Project shall be prepared to the SCADA signal terminal.

(b) Technical Specifications of Major Equipment and Materials

Regarding electrical system and layout of the substation refer to attached drawings (DWG. No. S-E-02 and S-L-02 in Annex-II).

Technical specifications of major equipment and materials are shown in Table-2 of the Attachment.

(iii) Installation of 33/11kV Substation at Mwanyanya

(a) Oultline of the Components

Two (2) new step down transformers (33/11kV, 5MVA each), indoor type 33kV/11kV switchgear cubicles, 33/11kV Control/Metering panels, battery/charger and a low voltage panel, two (2) sets of 33kV dead end poles (33kV incoming) and two (2) sets of 11kV underground cables (11kV outgoing) shall be installed at the area.

33kV and 11kV cables of armored type shall be directly buried under the ground about 1.2 meter(Outside of S/S) and 0.6 meter (Inside of S/S) deep.

Low voltage and control cables shall be installed inside cable trench and conduit.

The earthing resistance of the substation site is supposed to be less than 10 ohm for design purposes.

The new 33/11 kV switchgears and Control Panel to be procured under the Project shall be prepared to the SCADA signal terminal.

(b) Technical Specifications of Major Equipment and Materials

Regarding electrical system and layout of the substation refer to attached drawings (DWG. No. S-E-03 and S-L-03 in Annex-II).

Technical specifications of major equipment and materials are shown in Table-3 of the Attachment.

(iv) Installation of 33/11kV Distribution Line from Mtoni to Mahonda (New North Route)

(a) Outline of the Components

33kV distribution line of single circuit about 20.3 km long shall be constructed between Mtoni substation and Mahonda by the conductor of ACSR 100mm2 or ABC 3x150mm^2 +50mm^2 as shown in Route Map of 33kV Distribution Lines and Detail of 33kV Distribution Route in Annex-III. The new 33kV distribution lines will be installed in the existing buffer zone that has 15m from the center of the existing 33kV distribution lines with clearance of 5m from the existing 33kV distribution lines.

As for the design of 33kV distribution line, TANESCO's standards (Distribution Construction Hand Book and Construction Practices) shall be applied basically.

The standard span of poles for ACSR shall be 100 m while 70 m span is applied in the section of approximately 1 km from Mtoni Substation. The standard span of poles for ABC cables shall be 50m.

Wooden poles (12 m) are used in general but steel poles (15 m) are adapted to a location where the ABC cables are applied to.

Section poles shall be installed every 10 spans for ACSR lines and every 5 spans for ABC cable lines.

(b) Technical Specifications

Technical specifications of major materials are shown in Table-4 of the Attachment.

(v) Installation of 33/11kV Distribution Line from Mtoni to Tunguu (New South Route)

(a) Outline of the Components

33kV distribution line of single circuit about 22.0 km long shall be constructed between Mtoni substation and Tunguu by the conductor of ACSR 100mm2 or ABC 3x150mm^2 +50mm^2 as shown in Route Map of 33kV Distribution Lines and Detail of 33kV Distribution Route in Annex-III. The new 33kV distribution lines will be installed in the existing buffer zone that has 15m from the center of the existing 33kV distribution lines with clearance of 5m from the existing 33kV distribution lines.

The New 132kV transmission lines will be constructed by MCC Project on the right side of the existing 132kV transmission lines where the existing 33kV and 11kV Fumba lines are laying now. Accordingly ZECO will shift those existing 33kV and 11kV Fumba lines to the opposite side of the existing 132kV transmission lines at 5m from the edge of the buffer zone. The New South Route will be installed with the New Fumba Route in parallel for the section from Mtoni Substation until Amani area by ABC cables along the edge of the buffer zone.

As for the design of 33kV distribution line, TANESCO's standards (Distribution Construction Hand Book and Construction Practices) shall be applied basically.

The standard span of poles for ACSR shall be 100 m. The standard span of poles for ABC cables shall be 50m.

Wooden poles (12 m) are used in general but steel poles (15 m) are adapted to a location where the ABC cables are applied to.

Section poles shall be installed every 10 spans for ACSR lines and every 5 spans for ABC cable lines.

(b) Technical Specifications

Technical specifications of major materials are shown in Table-4 of the Attachment.

(vi) Replacement of 33/11kV Distribution Line from Mtoni to Fumba (New Fumba Route)

(a) Outline of the Components

33kV distribution line of single circuit about 38.5 km long shall be constructed between Mtoni substation and Fumba by the conductor of ACSR 100mm2 or ABC 3x150mm^2 +50mm^2 as shown in Route Map of 33kV Distribution Lines and Detail of 33kV Distribution Route in Annex-III. The new 33kV distribution lines will be installed in the existing buffer zone that has 15m from the center of the existing 33kV distribution lines with clearance of 5m from the existing 33kV distribution lines.

The New Fumba Route and the New South Route will be installed in parallel for the section from Mtoni Substation until Amani area by ABC cables along the edge of the buffer zone.

As for the design of 33kV distribution line, TANESCO's standards (Distribution Construction Hand Book and Construction Practices) shall be applied basically.

The standard span of poles for ACSR shall be 100 m. The standard span of poles for ABC cables shall be 50m.

Wooden poles (12 m) are used in general but steel poles (15 m) are adapted to a location where the ABC cables are applied to.

Section poles shall be installed every 10 spans for ACSR lines and every 5 spans for ABC cable lines.

(b) Technical Specifications

Technical specifications of major materials are shown in Table-4 of the Attachment.

(vii) Procurement of Equipment and Materials

(a) Outline of the Components

- Line conductors of ACSR 100 mm2 for repairs of 11 kV distribution lines: 37 km (route length)
- Supply of ABC conductor for 11 kV with accessories: 24 km
- Supply of XLPE conductor for low voltage with all accessories
  4 x 95 mm2 XLPE conductor: 20 km
  2 x 25 mm2 XLPE conductor: 10 km
- Underground cable 150 mm2 to complete ring circuit: 6 km
- Load break switch for 33 kV overhead distribution line: 15 sets
- Load break switch for 11 kV overhead distribution line: 4 sets
- 30/0.4 kV distribution transformers
  200 kVA: 5 sets
  315 kVA: 5 sets
- 11/0.4 kV distribution transformers
  250 kVA: 5 sets
  315 kVA: 5 sets
- Truck with cranes (7 tonnes): 3 pcs
- Digger and pole erector truck: 2 pcs

- High voltage tester (megger tester): 3 pcs
- Transformer oil measuring equipment: 3 pcs
- Cable fault locator with its pulse generator: 2 pcs
- Instrument for injection for CT, VT and relay testing: 1 pc
- Pole erection jacks: 4 pcs

(b) Technical Specifications

Technical specifications of major materials will be proposed by ZECO by **19th October 2010**.

Attachment: Technical Specifications for Major Equipment and Materials

Table 1. Expansion of 33kV Mtoni Substation

No.	Item / Equipment	Specifications	Quantity
1	33/11kV Transformer 1) Type 2) Rated primary voltage 3) Rated secondary voltage 4) Rated Capacity 5) Cooling type 6) Number of phases 7) Frequency 8) Tap voltage 9) Number of taps 10) Step voltage 11) Winding connection 12) Impedance	 Outdoor, oil immersed, with on-load tap changer 33kV 11kV 25MVA ONAF 3 50Hz 33kV +10% to -10% 17 taps 1.25% Primary : Star (neutral lead out) Secondary : Star (neutral lead out) Third : Delta About 7%	2 Sets (Refer to Drawing No.S-E-01)
2	Station Transformer 1) Type 2) Rated primary voltage 3) Rated secondary voltage 4) Rated Capacity 5) Cooling type 6) Number of phases 7) Frequency 8) Tap voltage 9) Winding connection	 Outdoor, oil immersed, with no-voltage tap changer 33kV 400 – 230V 100VA ONAN 3 50Hz 33kV ±2.5% and ±5.0% Primary : Delta Secondary : Star with neutral brought out	2 sets (Refer to Drawing No.S-E-01)
3	33kV Switchgear Cubicle 1) Type 2) Number of cubicle 3) Type of Circuit Breaker 4) Rated current 5) Rated short-time withstand current	 Indoor cubicle, Metal enclosed Switchgear cubicle Incoming feeder: 4 cubicles Outgoing feeder: 6 cubicles Bus coupler: 1 cubicle 33/11kV Tr feeder: 2 cubicles PT cubicle: 2 cubicle Station Transformer cubicle: 2 cubicle VCB Imcoming:1250A、Outgoing: 800A 25kA (1 sec.)	17 Cubicles (Refer to Drawing No.S-E-01)
4	33kV Control Panel 1) Type 2) Control & Supervision(Annunciation)	 Indoor cubicle, Metal enclosed and self-standing 33kV incoming feeder, Bus section, 33kV Outgoing feeder	3 panels (Refer to Drawing No.S-L-01)
5	33kV Metering Panel 1) Type 2) Measurement	 Indoor cubicle Ampere, Voltage, Watt, Var, Watt hour etc	1 Panel (Refer to Drawing No.S-E-01)
6	33/11kV Tr Control and Protection Panel 1) Type 2) Control & Supervision 3) Measurement 4) Protection	 Indoor cubicle, Metal enclosed and self-standing 33/11kV Tr secondary feeder Ampere, Voltage, Watt, Var, Watt hour etc Over current, Eaeth fault OC, Differential etc	1 panel (Refer to Drawing No.S-E-01)
7	AC Distribution Board 1) Type	For LV (400-230V AC) Indoor cubicle	1 panel (Refer to Drawing No.S-E-01)
8	DC Supply system 1) Type	For DC (110V DC) Battery and Charger Panel (Indoor type)	1 lot (Refer to Drawing No.S-E-01)

No.	Item / Equipment	Specifications	Quantity
9	33kV and 11kV Cables 1) Type 2) Conductor and insulation	 Armored type cables directly buried under the ground Copper conductor and XLPE insulation	1 lot (Refer to Drawing No.S-L-01)
10	33kV Cable Structure	For connecting between the existing gantry structure and the new 33kV Mtoni Substation	7 sets
	Modification of the Existing Gantry Structure for Connection of Three (3) 33kV Outgoing Feeders		
11	Additional galvanized steel structure	For installing new 33kV Line Switches and 33kV Lightning Arresters (as shown in Item No. 12 and 13) on the existing gantry.	1 lot
12	33kV Line Switch	To be installed on the existing gantry or additional galvanized steel structure.	3 sets (Refer to Drawing No.S-L-04)
13	33kV Lightning Arrester	To be installed on the existing gantry or additional galvanized steel structure.	9 pcs (Refer to Drawing No.S-L-04)
14	Disc Insulator Set	To be installed on the existing gantry or additional galvanized steel structure.	27 pcs (Refer to Drawing No.S-L-04)
15	Earthing materials	For connecting between equipments and earth such as IV wire, PVC pipe, earthing rod, etc.	1 lot

HA

Table 2. Installation of 33/11kV Substation at Welezo

No.	Item / Equipment	Specifications	Quantity
1	33/11kV Transformer 1) Type 2) Rated primary voltage 3) Rated secondary voltage 4) Rated Capacity 5) Cooling type 6) Number of phases 7) Frequency 8) Tap voltage 9) Number of taps 10) Step voltage 11) Winding connection 12) Impedance	 Outdoor, oil immersed, with on-load tap changer 33kV 11kV 5MVA ONAF 3 50Hz 33kV +10% to -10% 17 taps 1.25% Primary : Star (neutral lead out) Secondary : Star (neutral lead out) Third : Delta About 7%	2 Sets
2	Station Transformer 1) Type 2) Rated primary voltage 3) Rated secondary voltage 4) Rated Capacity 5) Cooling type 6) Number of phases 7) Frequency 8) Tap voltage 9) Winding connection	 Outdoor, oil immersed, with no-voltage tap changer 33kV 400 – 230V 50VA ONAN 3 50Hz 33kV ±2.5% and ±5.0% Primary : Delta Secondary : Star with neutral brought out	1 set
3	33kV Switchgear Cubicle 1) Type 2) Number of cubicle 3) Type of Circuit Breaker 4) Rated current 5) Rated short-time withstand current	 Indoor cubicle, Metal enclosed Switchgear cubicle Incoming feeder: 2 cubicles Outgoing feeder: 2 cubicles Bus coupler: 1 cubicle PT cubicle: 1 cubicle Station Transformer cubicle: 1 cubicle VCB 1250A 25kA (1sec.)	7 Cubicles
4	11kV Switchgear Cubicle 1) Type 2) Number of cubicle 3) Type of Circuit Breaker 4) Rated current 5) Rated short-time withstand current 6) Metering and protection relays	 Indoor cubicle, Metal enclosed Switchgear cubicle Incoming feeder: 2 cubicles Outgoing feeder: 2 cubicles Bus coupler: 1 cubicle VCB Incoming feeder: 1,250A, Outgoing feeder: 630A 25kA (1sec.) Inside of cubicles	5 Cubicles
5	33/11kV Control Panel 1) Type 2) Control & Supervision(Annunciation)	 Indoor cubicle, Metal enclosed and self-standing 33kV incoming feeder, Bus section, 11kV Outgoing feeder	1 panel
6	33/11kV Metering Panel 1) Type 2) Measurement	 Indoor cubicle, Metal enclosed and self-standing Ampere, Voltage, Watt, Var, Watt hour etc	1 panel (Refer to Drawing No.S-E-02)
7	33/11kV Tr Control and Protection Panel 1) Type 2) Control & Supervision 3) Measurement 4) Protection	 Indoor cubicle, Metal enclosed and self-standing 33/11kV Tr secondary feeder Ampere, Voltage, Watt, Var, Watt hour etc Over current, Eacth fault OC, Differential etc	1 panel (Refer to Drawing No.S-E-02)
8	AC Distribution Board 1) Type	For LV (400-230V AC) Indoor cubicle	1 panel (Refer to Drawing No.S-E-02)

No.	Item / Equipment	Specifications	Quantity
9	DC Supply system 1) Type	For DC (110V DC) Battery and Charger Panel (Indoor type)	1 lot (Refer to Drawing No.S-E-02)
10	33kV dead end pole 1) Type 2) Equipment mounted on pole	 H pole type 33kV Lightning Arresters and Line Switch	2 Sets (Refer to Drawing No.S-L-02)
11	11kV dead end pole 1) Type 2) Equipment mounted on pole	 H pole type 11kV Lightning Arresters and Line Switch	2 Sets (Refer to Drawing No.S-L-02)
12	33kV and 11kV Cables 1)Type 2)Conductor and insulation	 Armored type cables directly buried under the ground Copper conductor and XLPE insulation	1 Lot

Table 3. Installation of 33/11kV Substation at Mwanyanya

No.	Item / Equipment	Specifications	Quantity
1	33/11kV Transformer 1) Type 2) Rated primary voltage 3) Rated secondary voltage 4) Rated Capacity 5) Cooling type 6) Number of phases 7) Frequency 8) Tap voltage 9) Number of taps 10) Step voltage 11) Winding connection 12) Impedance	 Outdoor, oil immersed, with on-load tap changer 33kV 11kV 5MVA ONAF 3 50Hz 33kV +10% to -10% 17 taps 1.25% Primary : Star (neutral lead out) Secondary : Star (neutral lead out) Third : Delta About 7%	2 Sets
2	Station Transformer 1) Type 2) Rated primary voltage 3) Rated secondary voltage 4) Rated Capacity 5) Cooling type 6) Number of phases 7) Frequency 8) Tap voltage 9) Winding connection	 Outdoor, oil immersed, with no-voltage tap changer 33kV 400 – 230V 50VA ONAN 3 50Hz 33kV ±2.5% and ±5.0% Primary : Delta Secondary : Star with neutral brought out	1 set
3	33kV Switchgear Cubicle 1) Type 2) Number of cubicle 3) Type of Circuit Breaker 4) Rated current 5) Rated short-time withstand current	 Indoor cubicle, Metal enclosed Switchgear cubicle Incoming feeder: 2 cubicles Outgoing feeder: 2 cubicles Bus coupler: 1 cubicle PT cubicle: 1 cubicle Station Transformer cubicle: 1 cubicle VCB 1250A 25kA (1sec.)	7 Cubicles
4	11kV Switchgear Cubicle 1) Type 2) Number of cubicle 3) Type of Circuit Breaker 4) Rated current 5) Rated short-time withstand current 6) Metering and protection relays	 Indoor cubicle, Metal enclosed Switchgear cubicle Incoming feeder: 2 cubicles Outgoing feeder: 2 cubicles Bus coupler: 1 cubicle VCB Incoming feeder: 1,250A, Outgoing feeder: 630A 25kA (1sec.) Inside of cubicles	5 Cubicles
5	33/11kV Control Panel 1) Type 2) Control & Supervision(Annunciation)	 Indoor cubicle, Metal enclosed and self-standing 33kV incoming feeder, Bus section, 11kV Outgoing feeder	1 panel
6	33/11kV Metering Panel 1) Type 2) Measurement	 Indoor cubicle, Metal enclosed and self-standing Ampere, Voltage, Watt, Var, Watt hour etc	1 panel (Refer to Drawing No.S-E-03)
7	33/11kV Tr Control and Protection Panel 1) Type 2) Control & Supervision 3) Measurement 4) Protection	 Indoor cubicle, Metal enclosed and self-standing 33/11kV Tr secondary feeder Ampere, Voltage, Watt, Var, Watt hour etc Over current, Eaeth fault OC, Differential etc	1 panel (Refer to Drawing No.S-E-03)
8	AC Distribution Board 1) Type	For LV (400-230V AC) Indoor Cubicle	1 panel (Refer to Drawing No.S-E-03)

No.	Item / Equipment	Specifications	Quantity
9	DC Supply system 1) Type	For DC (110V DC) Battery and Charger Panel (Indoor type)	1 lot (Refer to Drawing No.S-E-03)
10	33kV dead end pole 1) Type 2) Equipment mounted on pole	H pole type 33kV Lightning Arresters and Line Switch	2 Sets (Refer to Drawing No.S-L-03)
11	33kV and 11kV Cables 1) Type 2) Conductor and insulation	Armored type cables directly buried under the ground Copper conductor and XLPE insulation	1 Lot

Table 4. Installation of 33kV/11kV Distribution Lines

No.	Item / Equipment	Specifications	Quantity
1	33 kV Overhead Electric Pole		1 lot
	1) Material and Length	Wooden pole (12m) or Steel pole (15m)	
	2) Type (for ACSR lines)		
	(1) Intermediate Pole	Line angle: 0 deg.	
	(2) Light Angle Pole	〃 : Up to 30 deg.	
	(3) Section Pole	Installation: every 10 spans	
	(4) Section Pole with LBS		
	(5) Heavy Angle Pole	Line angle: 60 to 90 deg.	
	(6) Terminal Pole		
	(7) Terminal Pole with Line Switch		
	(8) T-off Pole		
	(9) Transformer Pole (Section type)		
	(10) Transformer Pole (Terminal type)		
	3) Type (for ABC lines)		
	(1) Intermediate Pole	Line angle: Up to 45 deg.	
	(2) Section Pole	Installation: every 5 spans	
	(3) Heavy Angle Pole	Line angle: 45 to 90 deg.	
	(4) Terminal Pole with Line Switch		
	(5) T-off Pole		
	(6) Transformer Pole (Section type)		
	(7) Transformer Pole (Terminal type)		
	(8) Convert Pole (ABC/ACSR)		
	4) Accessories	Pole cap, nail, etc.	
2	11 kV Overhead Electric Pole		1 lot
	1) Material and Length	Wooden pole (12m)	
	2) Type (for ACSR lines)		
	(1) Intermediate Pole	Line angle: 0 deg.	
	(2) Light Angle Pole	〃 : Up to 30 deg.	
	(3) Section Pole with LBS		
	(4) Heavy Angle Pole	Line angle: 60 to 90 deg.	
	(5) Terminal Pole		
	(6) Terminal Pole with Line Switch		
	3) Accessories	Pole cap, nail, etc.	
3	33kV Overhead Distribution Line		1 lot
	1) Applicable Standard	IEC or equivalent	
	2) Type and Nominal Section Size	ACSR100 mm^2 ABC 3x150mm^2 + 50mm^2	
4	11kV Overhead Distribution Line		1 lot
	1) Applicable Standard	IEC or equivalent	
	2) Type and Nominal Section Size	ACSR100 mm^2	
	3) Purpose of use	For connection between the secondary side of Main transformer at the new substations and the existing 11kV distribution lines.	
5	33kV Insulator		1 lot
	1) Pin Insulator		
	(1) Applicable Standard	IEC or equivalent	
	(2) Type	Porcelain glazed, color: brown	
	(3) Nominal Voltage	33 kV	
	(4) Basic Impulse Insulation Level	170 kV	
	2) Suspension Insulator		
	(1) Applicable Standard	IEC or equivalent	
	(2) Type	Porcelain glazed, color: brown, disc type	
	(3) Nominal Voltage	33 kV	
	(4) Minimum Creepage Distance	25 mm / kV	
	(5) Basic Impulse Insulation Level	170 kV	

No.	Item / Equipment	Specifications	Quantity
6	11kV Insulator 1) Pin Insulator (1) Applicable Standard (2) Type (3) Nominal Voltage (4) Basic Impulse Insulation Level 2) Suspension Insulator (1) Applicable Standard (2) Type (3) Nominal Voltage (4) Minimum Creepage Distance (5) Basic Impulse Insulation Level 3) Purpose of use	 IEC or equivalent Porcelain glazed, color: brown 11 kV 75 kV IEC or equivalent Porcelain glazed, color: brown, disc type 11 kV 25 mm / kV 75 kV For connection between the secondary side of Main transformer at the new substations and the existing 11kV distribution lines	1 lot
7	Pole Assembly Material 1) Cross Arm (1) Material (2) Finish (3) Section Shape 2) Anchor Shackle (1) Type (2) Material 3) Ball Clevis & socket eye (1) Material (2) Finish 4) Suspension Clamp 5) Branch Line (1) Material (2) Size 6) Stay Insulator (1) Line Voltage (2) Material 7) Stay Anchor (1) Material (2) Tensile Load 8) Turnbuckle (1) Material (2) Finish 9) Anti-Climbing 10) Nail 11) Staple 12) Display Board 13) Barbed Wire for Ivy protection	 Mild steel Hot-dipped galvanized L, C shape Bolt clamping type Steel Ductile iron or steel Hot-dipped galvanized Main body: Nodular graphite cast iron Holder: Aluminum alloy casting Zinc-coated steel wire 45 mm^2 (2.90 mm x 7) or equivalent 33 kV or 11 kV Porcelain glazed, color: brown Steel plates 6 tons Mild steel Hot-dipped galvanized PVC Low carbon steel Low carbon steel Japanese flag mark, pole number, danger plate	1 lot
8	33kV Load Breaker Switch 1) Applicable Standard 2) Type 3) Nominal Voltage 4) Rated Voltage 5) Short-time Current	 IEC or equivalent 3 phase, outdoor type, manual operation 33 kV 36 kV 25 kA or more	1 lot
9	11kV Load Breaker Switch 1) Applicable Standard 2) Type 3) Nominal Voltage 4) Rated Voltage 5) Short-time Current	 IEC or equivalent 3 phase, outdoor type, manual operation 11 kV 12 kV 25 kA or more	1 lot
10	33kV Lightning Arrester 1) Applicable Standard 2) Type 3) Nominal Voltage 4) Rated Voltage	 IEC or equivalent Outdoor type, gapless type 33 kV 36 kV	1 lot

No.	Item / Equipment	Specifications	Quantity
	5) Discharge Current	10kA	
11	11kV Lightning Arrester 1) Applicable Standard 2) Type 3) Nominal Voltage 4) Rated Voltage 5) Discharge Current	 IEC or equivalent Outdoor type, gapless type 11 kV 12 kV 10kA	1 lot

List of Outline Design Drawings

DWG. NO.	TITLE	SCALE
S-E-01	SINGLE LINE DIAGRAM FOR NEW 33kV SWGR (MTONI S/S)	-
S-E-02	SINGLE LINE DIAGRAM FOR MWANYANYA SUBSTATION	-
S-E-03	SINGLE LINE DIAGRAM FOR WELEZO SUBSTATION	-
S-E-04	Connection Plan for 33kV gentry (Mtoni S/S)	
S-L-01	LAYOUT FOR NEW SUBSTATION (MTONI S/S)	1 / 500
S-L-02	LAYOUT FOR MWANYANYA SUBSTATION	1 / 500
S-L-03	LAYOUT FOR WELEZO SUBSTATION	1 / 400
S-A-01	Mtoni S/S Control Room Plan, Finishing Schedule	1 / 150
S-A-02	Mtoni S/S Control Room Elevation, Section	1 / 200
S-A-03	Mwanyanya S/S & Welezo S/S Control Room Plan, finishing Schedule	1 / 150
S-A-04	Mwanyanya S/S & Welezo S/S Control Room Elevation, Section	1 / 200
IT-01	33/11kV Intermediate Pole (Line Angle 0°) for ACSR	1 / 60
IT-02	33/11kV Light Angle Pole (Line Angle up to 30°) for ACSR	1 / 60
IT-03	33kV Section Pole for ACSR	1 / 80
IT-04	33/11kV Section Pole with LBS for ACSR	1 / 80
IT-05	33/11kV Heavy Angle Pole (Line Angle 60°to 90°) for ACSR	1 / 80
IT-06	33/11kV Terminal Pole for ACSR	1 / 80
IT-07	33/11kV Terminal Pole with Line Switch for ACSR	1 / 80
IT-08	33kV T-off Pole for ACSR	1 / 80
IT-09	33kV Transformer Pole (Section Type) for ACSR	1 / 100
IT-10	33kV Transformer Pole (Terminal Type) for ACSR	1 / 100
IT-11	Typical Assemblies of 33kV Distribution Lines by ABC	-

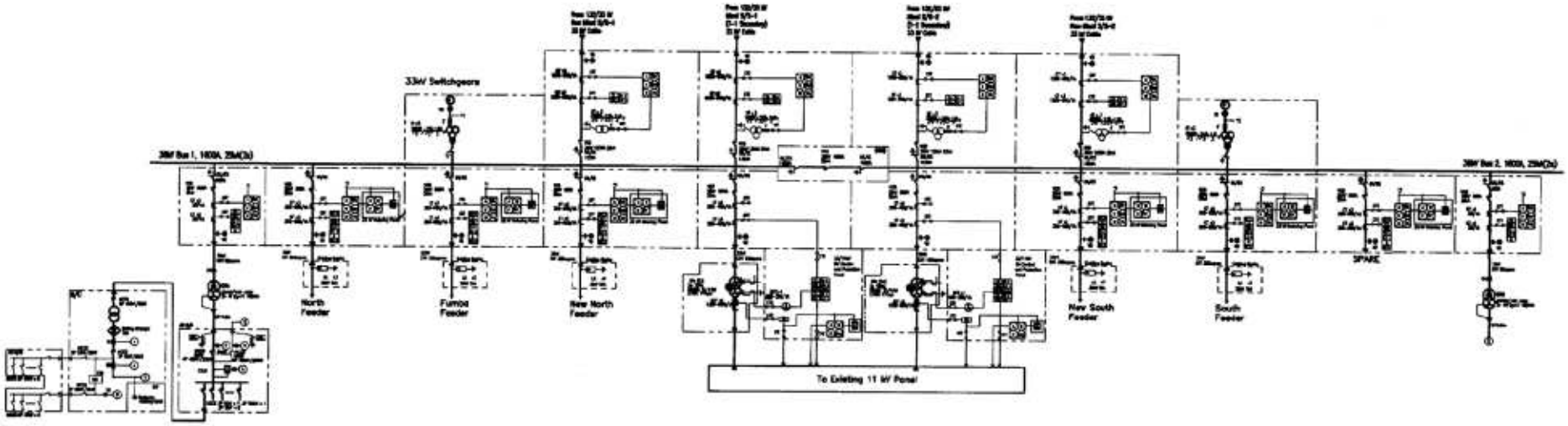

LEGEND :

ABBREVIATIONS

SYMBOL	DESCRIPTION
MT>	MAIN TRANSFORMER
DT>	DISTRIBUTION TRANSFORMER
DS	DISCONNECTING SWITCH
ES	EARTHING SWITCH
GCB	GAS CIRCUIT BREAKER
VCB	VACUUM CIRCUIT BREAKER
LA	LIGHTNING ARRESTER
CVT	CAPACITOR VOLTAGE TRANSFORMER
VT	VOLTAGE TRANSFORMER
CT	CURRENT TRANSFORMER
AC D/B	AC DISTRIBUTION BOARD
DC D/B	DC DISTRIBUTION BOARD
STR	STATION SERVICE TRANSFORMER
B/C	BATTERY CHARGER
BAT	BATTERY
BCT	BURSING TYPE CURRENT TRANSFORMER
VTT	VOLTAGE TEST TERMINAL
CTT	CURRENT TEST TERMINAL
VD	VOLTAGE DETECTOR
CH	CABLE HEAD
MCCB	MOLDED CASE CIRCUIT BREAKER
F	FUSE
SH	SHUNT

PROTECTIVE DEVICES AND FUNCTIONS

SYMBOL	NAME OF PROTECTIVE DEVICE
I>>	INVERSE TIME OVER CURRENT PROTECTION
I>>	INSTANTANEOUS OVER CURRENT PROTECTION
Ie>	EARTH FAULT OVER CURRENT PROTECTION
Ie>>	INSTANTANEOUS EARTH FAULT OVER CURRENT PROTECTION
87>	DIFFERENTIAL PROTECTION
64/67>	RESTRICTED EARTH FAULT PROTECTION
21	DISTANCE PROTECTION
U<	OVER VOLTAGE PROTECTION
U>	UNDER VOLTAGE PROTECTION
25	SYNCHROCHECK
90	AUTOMATIC VOLTAGE CONTROL
90	AUTO REGULATOR
A	AMPERE
V	VOLTAGE
W	WATT(ACTIVE ENERGY)
Var	VAR (REACTIVE ENERGY)
Wh	WATT HOUR (TOTAL ACTIVE ENERGY)
Varh	VAR HOUR (TOTAL REACTIVE ENERGY)
Hz	FREQUENCY
Amax	MAXIMUM AMPERE

DWG No. S-E-01
SINGLE LINE DIAGRAM FOR
NEW 33kV SWGR (MTONI S/S)
新33kV SWGR(ムトニ変電所) 単線図

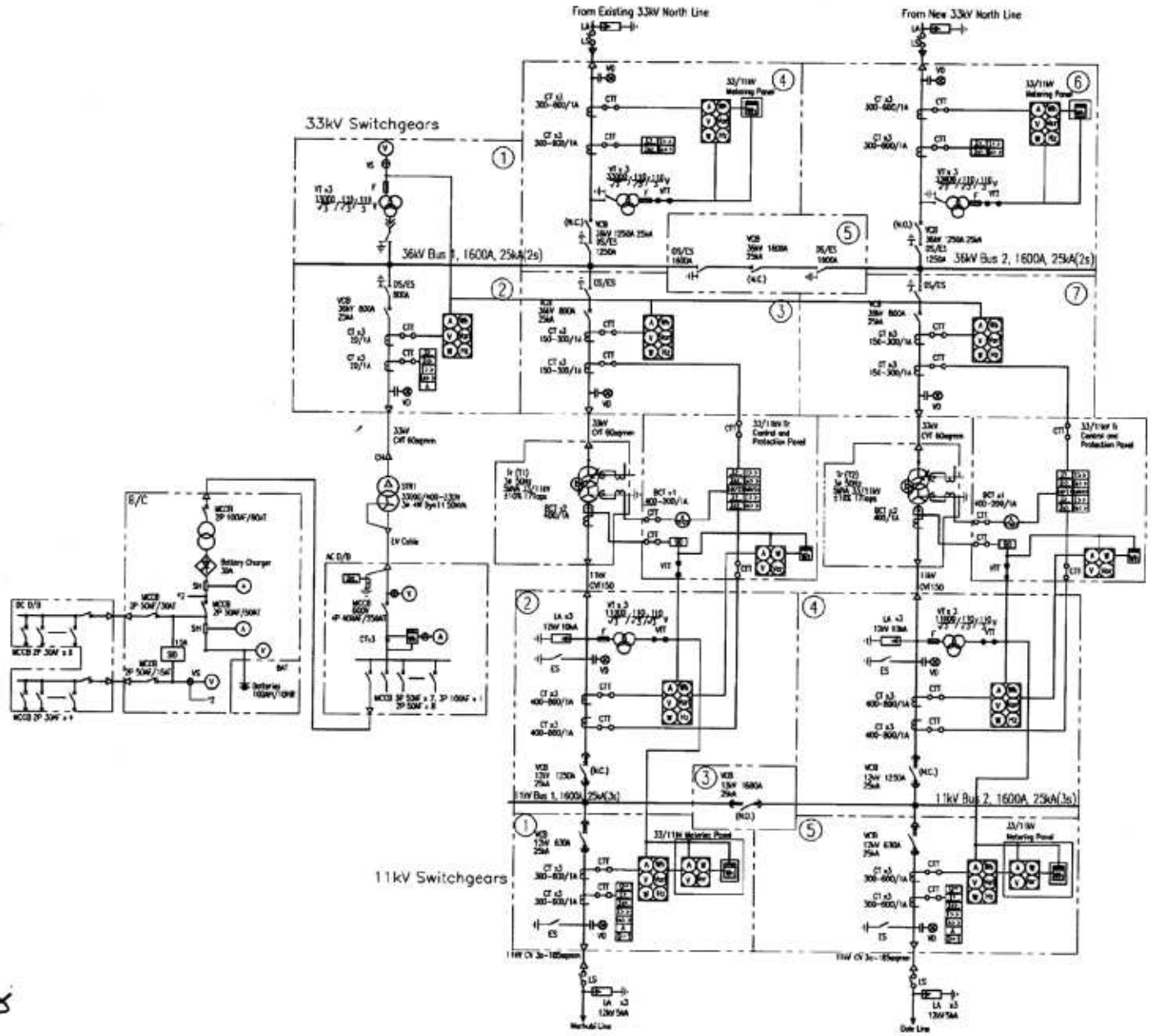

LEGEND :

ABBREVIATIONS

SYMBOL	DESCRIPTION
Tr	POWER TRANSFORMER
DS	DISCONNECTING SWITCH
ES	EARTHING SWITCH
VCB	VACUUM CIRCUIT BREAKER
LA	LIGHTNING ARRESTER
VT	VOLTAGE TRANSFORMER
CT	CURRENT TRANSFORMER
AC D/B	AC DISTRIBUTION BOARD
DC D/B	DC DISTRIBUTION BOARD
STR	STATION SERVICE TRANSFORMER
B/D	BATTERY CHARGER
BAT	BATTERY
BCT	BUSHING TYPE CURRENT TRANSFORMER
VTT	VOLTAGE TEST TERMINAL
CTT	CURRENT TEST TERMINAL
VD	VOLTAGE DETECTOR
CH	CABLE HEAD
MCCB	MOLDED CASE CIRCUIT BREAKER
F	FUSE
SH	SID SILICONE DROPPER

PROTECTIVE DEVICES AND FUNCTIONS

SYMBOL	NAME OF PROTECTIVE DEVICE
I>	INVERCE TIME OVER CURRENT PROTECTION
I>>	INSTANTANEOUS OVER CURRENT PROTECTION
Ie	EARTH FAULT OVER CURRENT PROTECTION
Ie>>	INSTANTANEOUS EARTH FAULT OVER CURRENT PROTECTION
MVD	DIFFERENTIAL PROTECTION
MVD	RESTRICTED EARTH FAULT PROTECTION
U<	OVER VOLTAGE PROTECTION
U>	UNDER VOLTAGE PROTECTION
25	SYNCHROCHECK
90	AUTOMATIC VOLTAGE CONTROL
S-R	AUTO RECLOSER
A	AMPERE
V	VOLTAGE
W	WATT(ACTIVE ENERGY)
Var	VAR (REACTIVE ENERGY)
Wh	WATT HOUR (TOTAL ACTIVE ENERGY)
Varh	VAR HOUR (TOTAL REACTIVE ENERGY)
Hz	FREQUENCY
Amax	MAXIMUM AMPERE

DWG No. S-E-02
SINGLE LINE DIAGRAM FOR MWANYANYA SUBSTATION
ムワニャニャ変電所 単線図

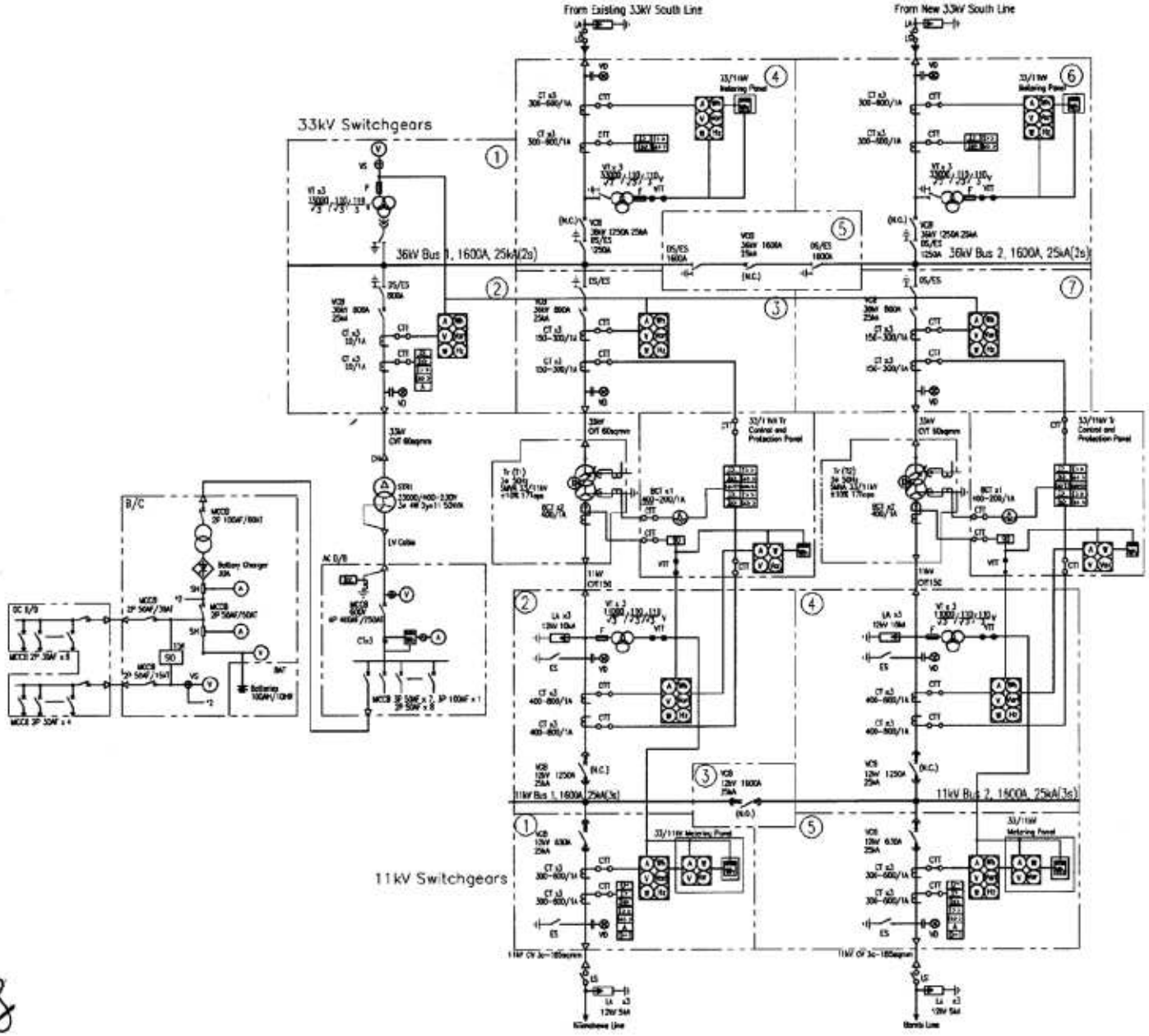

LEGEND :

ABBREVIATIONS

SYMBOL	DESCRIPTION
Tr	POWER TRANSFORMER
DS	DISCONNECTING SWITCH
ES	EARTHING SWITCH
VCB	VACUUM CIRCUIT BREAKER
LA	LIGHTNING ARRESTER
VT	VOLTAGE TRANSFORMER
CT	CURRENT TRANSFORMER
AC D/B	AC DISTRIBUTION BOARD
DC D/B	DC DISTRIBUTION BOARD
STR	STATION SERVICE TRANSFORMER
B/C	BATTERY CHARGER
BAT	BATTERY
BCT	BUSHING TYPE CURRENT TRANSFORMER
VTT	VOLTAGE TEST TERMINAL
CTT	CURRENT TEST TERMINAL
VD	VOLTAGE DETECTOR
CH	CABLE HEAD
MCCB	MOLDED CASE CIRCUIT BREAKER
F	FUSE
SH	SD SILICONE DROPPER

PROTECTIVE DEVICES AND FUNCTIONS

SYMBOL	NAME OF PROTECTIVE DEVICE
I>	INVERSE TIME OVER CURRENT PROTECTION
I>>	INSTANTANEOUS OVER CURRENT PROTECTION
Ie>	EARTH FAULT OVER CURRENT PROTECTION
Ie>>	INSTANTANEOUS EARTH FAULT OVER CURRENT PROTECTION
M/D	DIFFERENTIAL PROTECTION
MN/D	RESTRICTED EARTH FAULT PROTECTION
U<	OVER VOLTAGE PROTECTION
U>	UNDER VOLTAGE PROTECTION
25	SYNCHROCHECK
90	AUTOMATIC VOLTAGE CONTROL
O→I	AUTO RECLOSER
A	AMPERE
V	VOLTAGE
W	WATT(ACTIVE ENERGY)
Var	VAR (REACTIVE ENERGY)
Wh	WATT HOUR (TOTAL ACTIVE ENERGY)
Varh	VAR HOUR (TOTAL REACTIVE ENERGY)
Hz	FREQUENCY
Amax	MAXIMUM AMPERE

DWG No. S-E-03
SINGLE LINE DIAGRAM FOR WELEZO SUBSTATION
ウェレゾ変電所 単線図

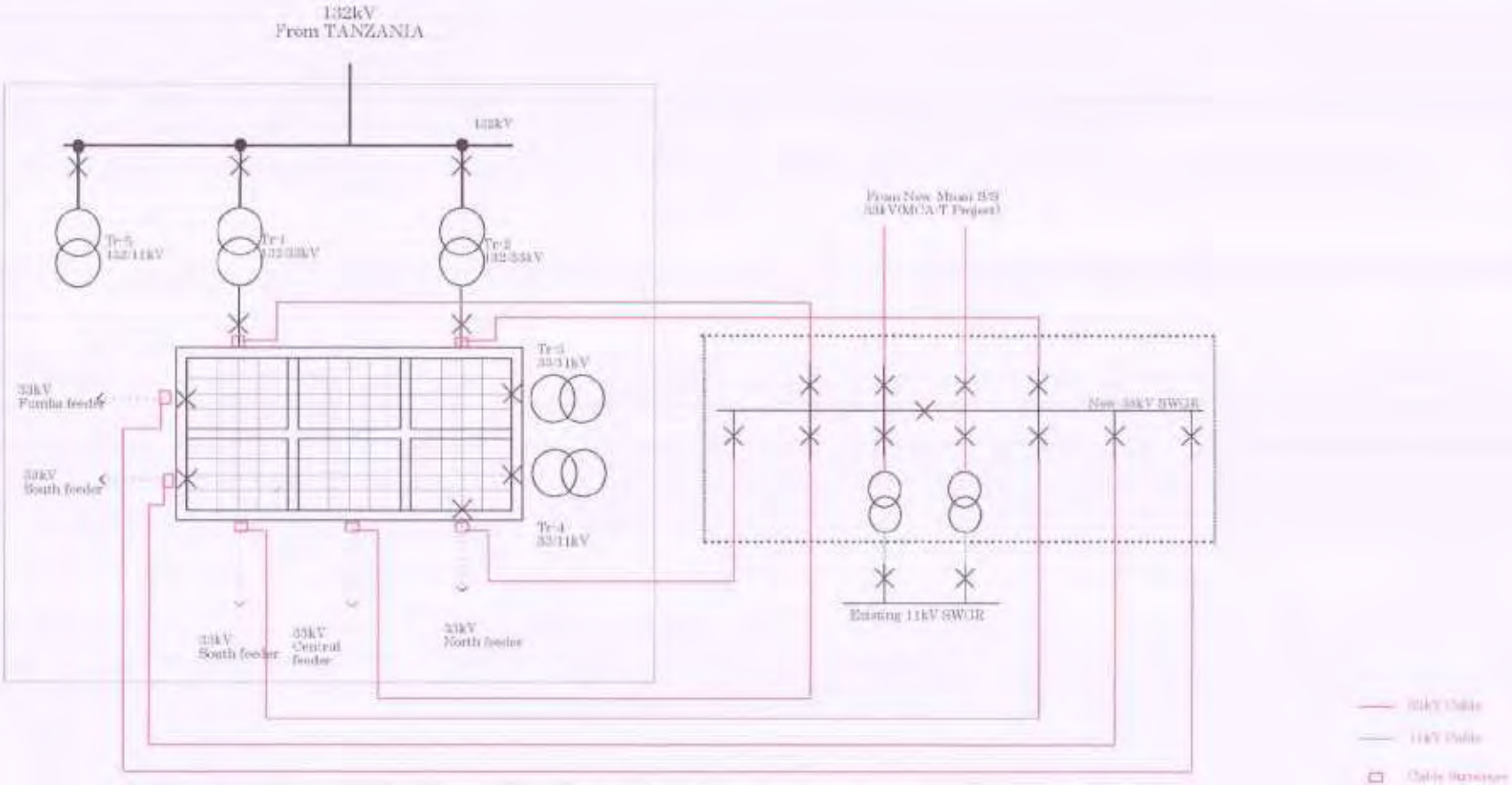

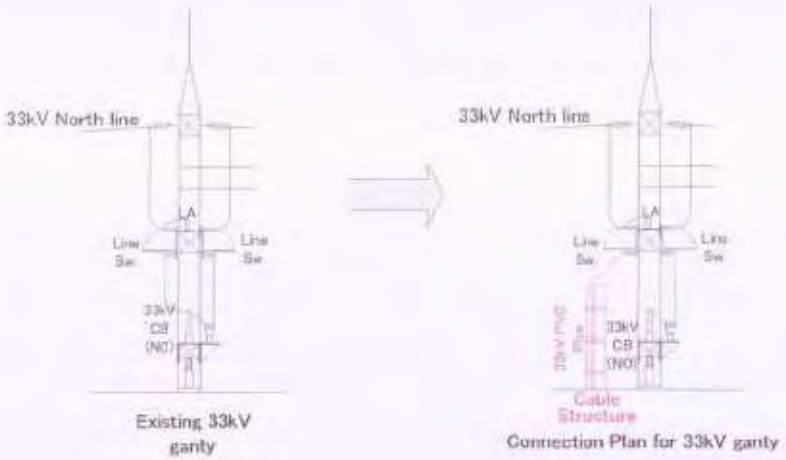

DWG. S-E-04
Connection Plan for Existing 33kV gantry (Mtoni S/S)

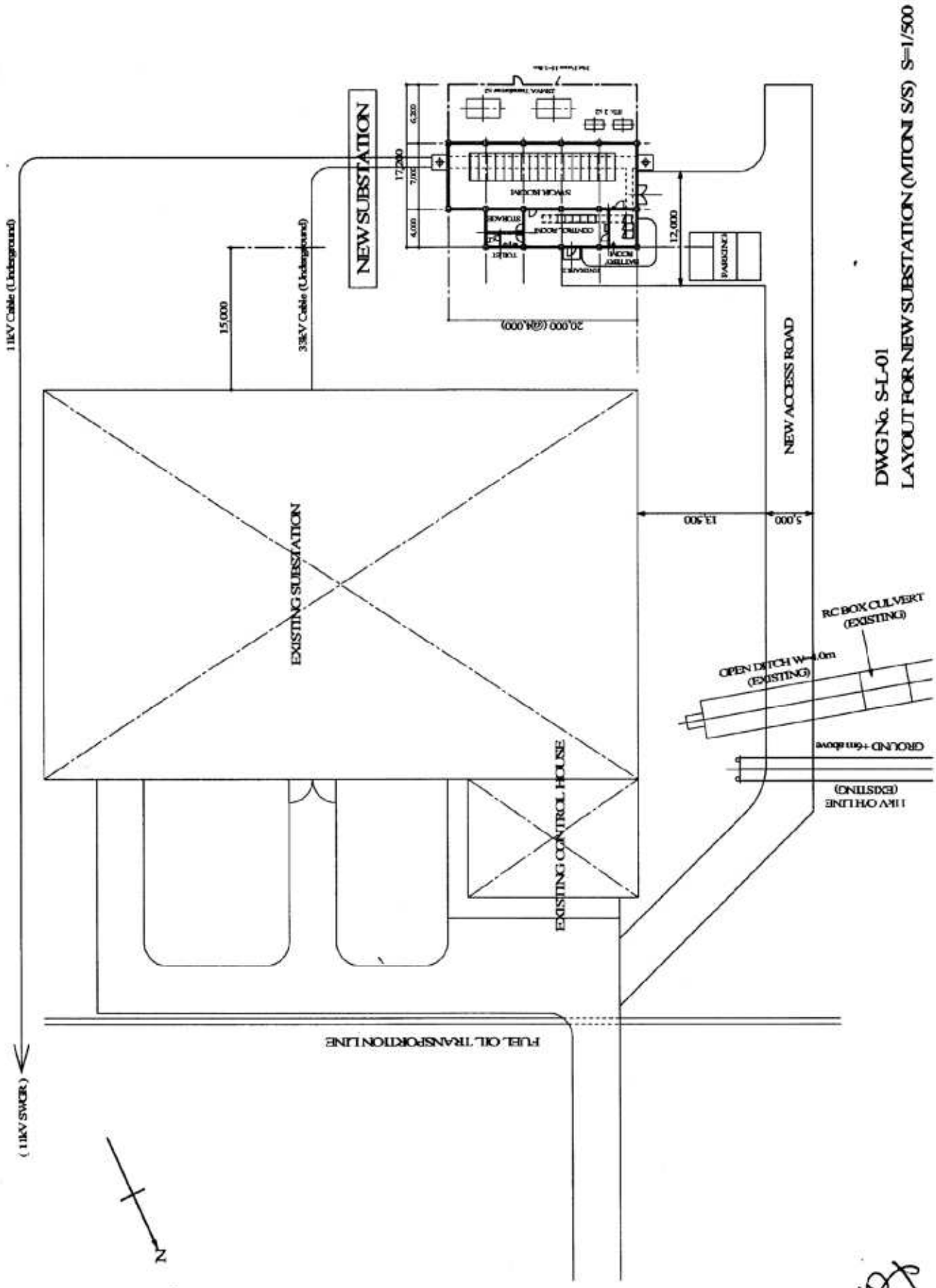
DWG No. SL-01
LAYOUT FOR NEW SUBSTATION (MITONI S/S) S=1/500
NEW SUBSTATION
NEW ACCESS ROAD
EXISTING SUBSTATION
EXISTING CONTROL HOUSE
FUEL OIL TRANSPORTATION LINE
11kV Cable (Underground)
33kV Cable (Underground)
(11kV SWGR.)
RC BOX CULVERT (EXISTING)
OPEN DITCH W=4.0m (EXISTING)
GROUND +6m above
11kV OH LINE (EXISTING)
PARKING
SWGR ROOM
CONTROL ROOM
BATTERY ROOM
TOILET
BRIDGE
EXPANSION
20,000 (@4,000)
17,200
6,320
7,000
4,000
12,000
15,000
13,900
5,000
N

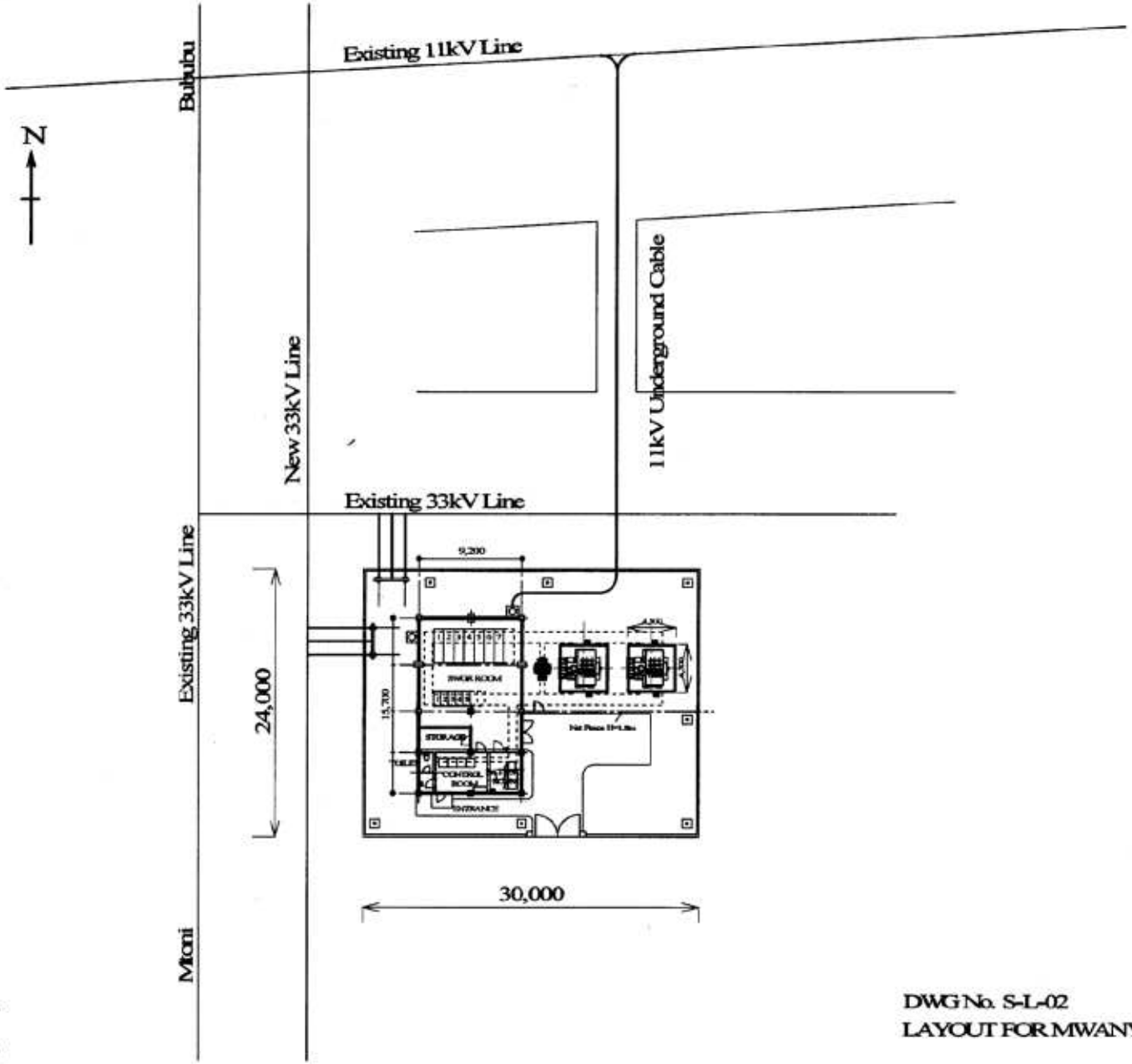

DWG No. S-L-02

LAYOUT FOR MWANYANYA SUBSTATION (S=1/500)

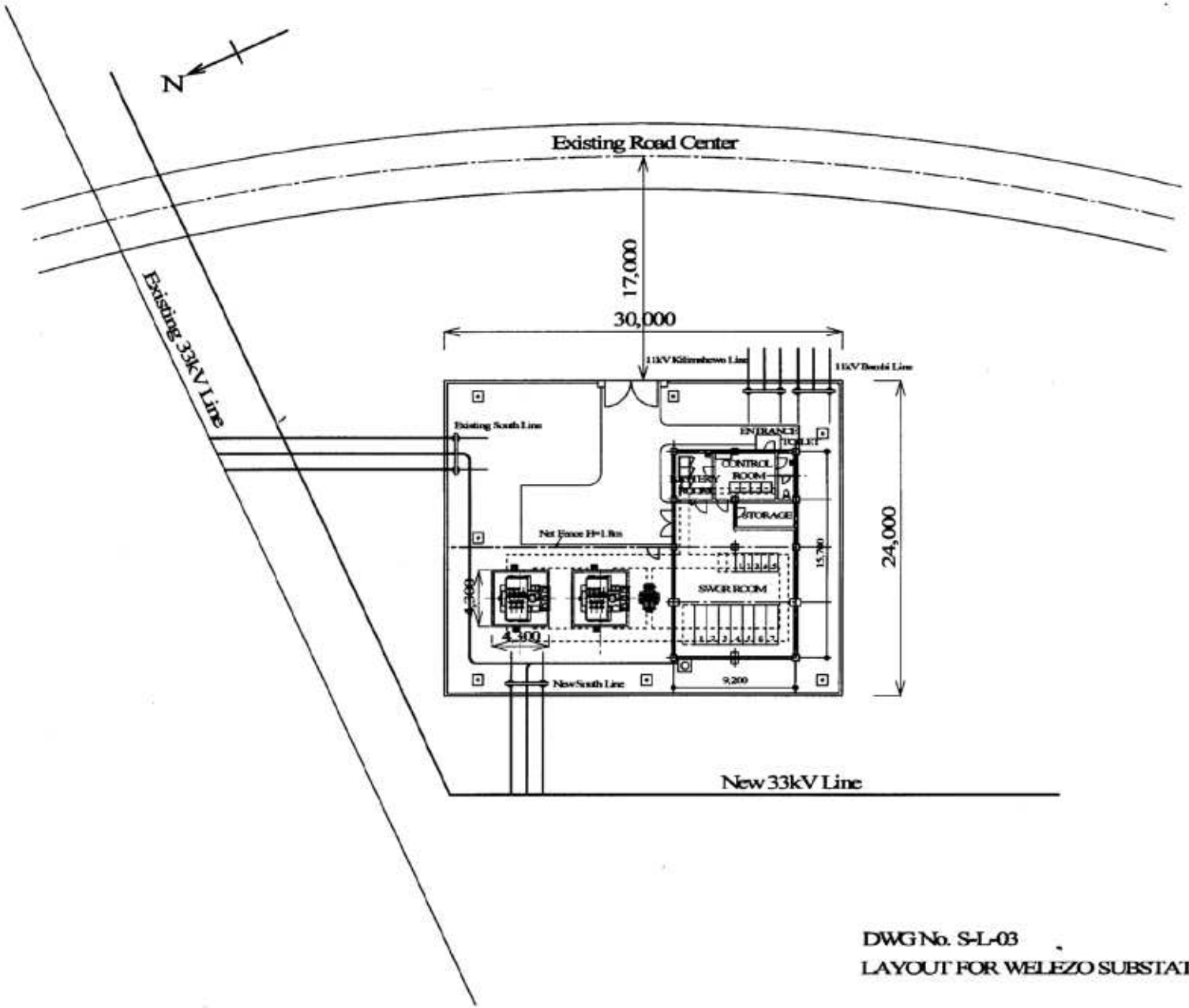

DWG No. S-L-03

LAYOUT FOR WELEZO SUBSTATION (S=1/400)

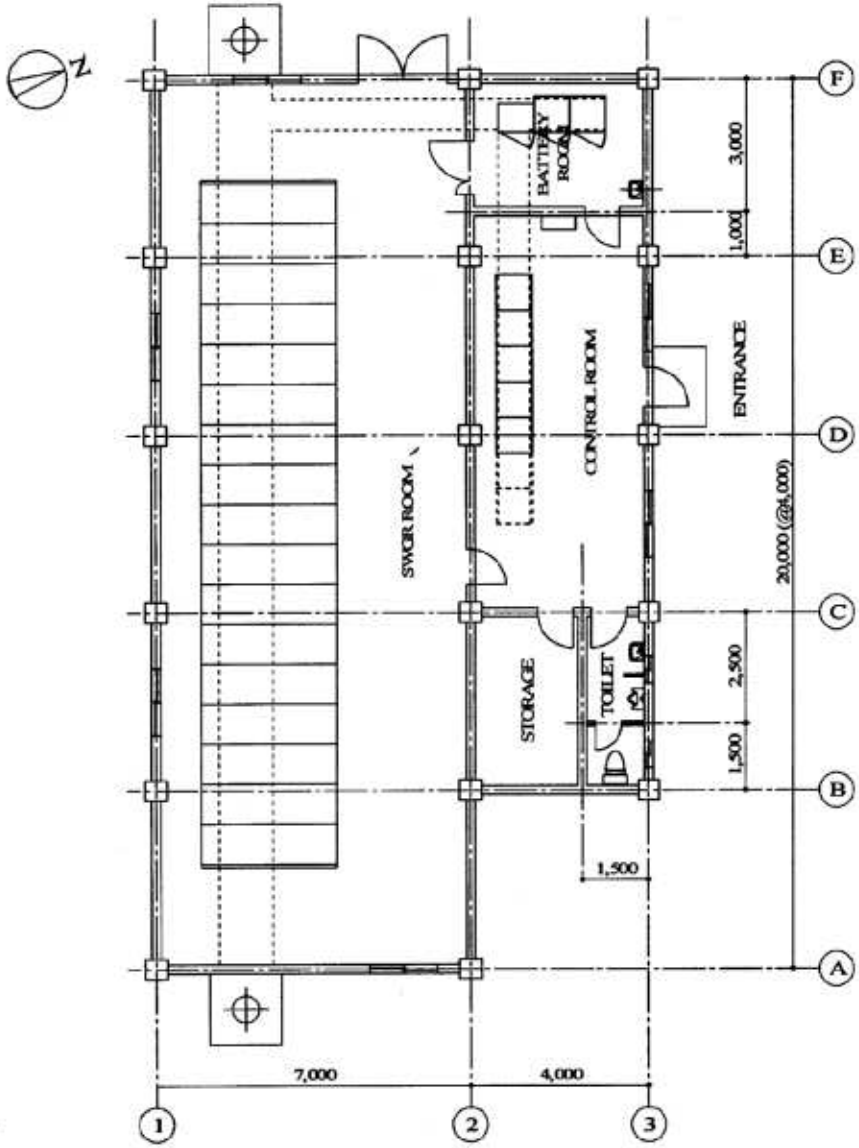

1. EXTERIOR FINISHING	
TOP ROOF	PROTECTION CONCRETE T=60, with meshed wire WATER-PROOF COATING
EXTERIOR WALL	CONCRETE BLOCK t=200, MORTAL TROWEL PAINTING FINISH (EP FOR EXTERNAL) ON MORTAR

2. INTERIOR FINISHING		
ROOM NAME	FINISHING / SPECIFICATION	
CONTROL ROOM	FLOOR	FREE ACCESS FLOOR (H=400) with TILE CARPET
	WALL	EP PAINTING FINISH ON MORTAR
	CEILING	SUSPENDED CEILING, DECORATED PLASTER BOARD
STORAGE	FLOOR	DUST PROOF TYPE PAINTING FINISH ON MORTAR
	WALL	EP PAINTING FINISH ON MORTAR
	CEILING	EP PAINTING FINISH
SWGR ROOM	FLOOR	DUST PROOF TYPE PAINTING FINISH ON MORTAR
	WALL	EP PAINTING FINISH ON MORTAR
	CEILING	SUSPENDED CEILING, DECORATED PLASTER BOARD
BATTERY ROOM	FLOOR	ACID RESISTANT TYPE PAINTING FINISH ON MORTAR
	WALL	EP PAINTING FINISH ON MORTAR
	CEILING	EP PAINTING FINISH
TOILET	FLOOR	PORCELAIN TILE 300 x 300 (NON-SLIP TYPE)
	WALL	PORCELAIN TILE 300 x 300
	CEILING	SUSPENDED CEILING, DECORATED PLASTER BOARD

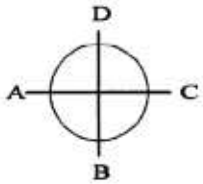

DWG No. S-A-01
MTONI S/S CONTROL ROOM
PLAN, FINISHING SCHEDULE

S=1/150

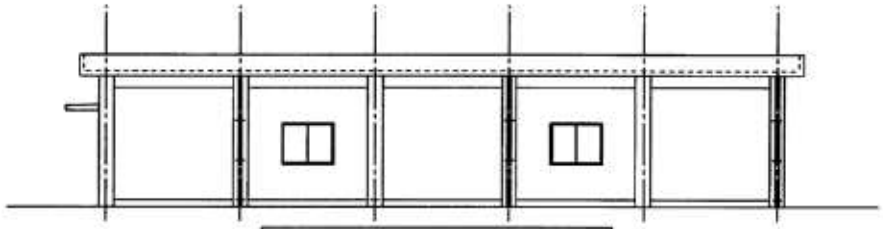

A-A ELEVATION 1/200

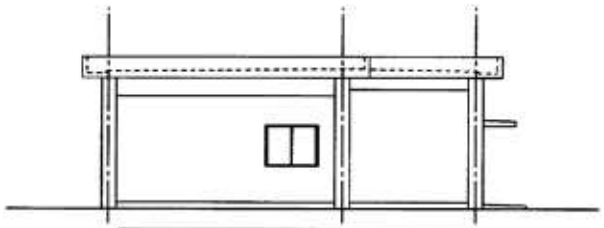

B-B ELEVATION 1/200

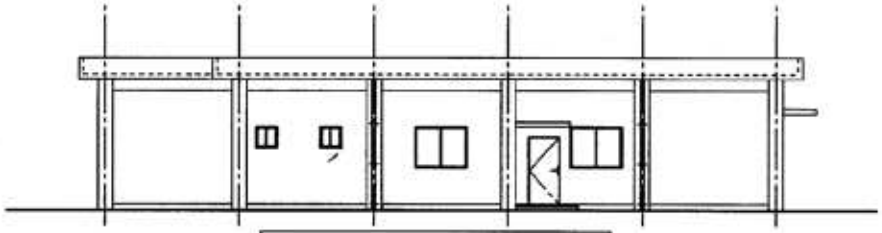

C-C ELEVATION 1/200

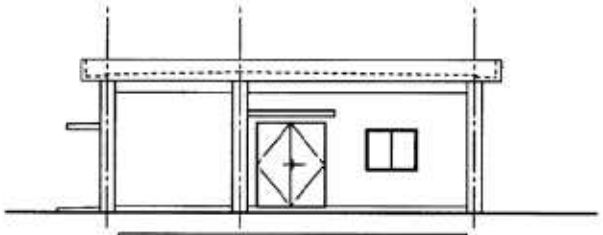

D-D ELEVATION 1/200

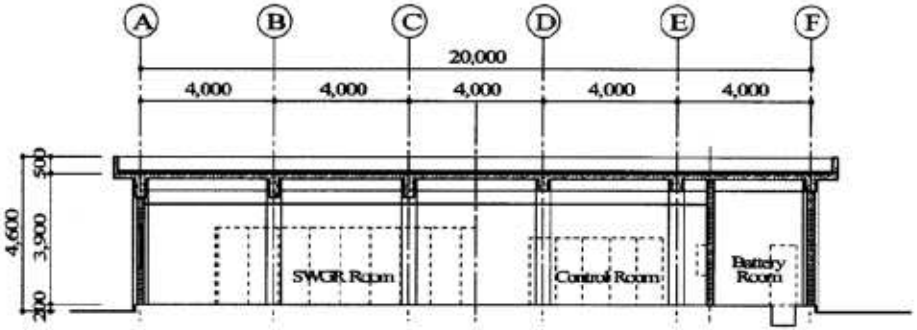

SECTION-1 1/200

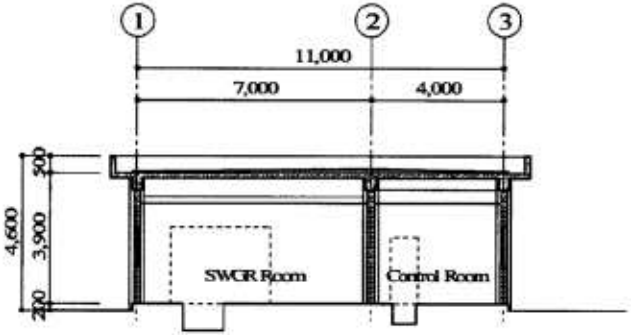

SECTION-2 1/200

DWG No. S-A-02
MTONI S/S CONTROL ROOM
ELEVATION, SECTION

S=1/200

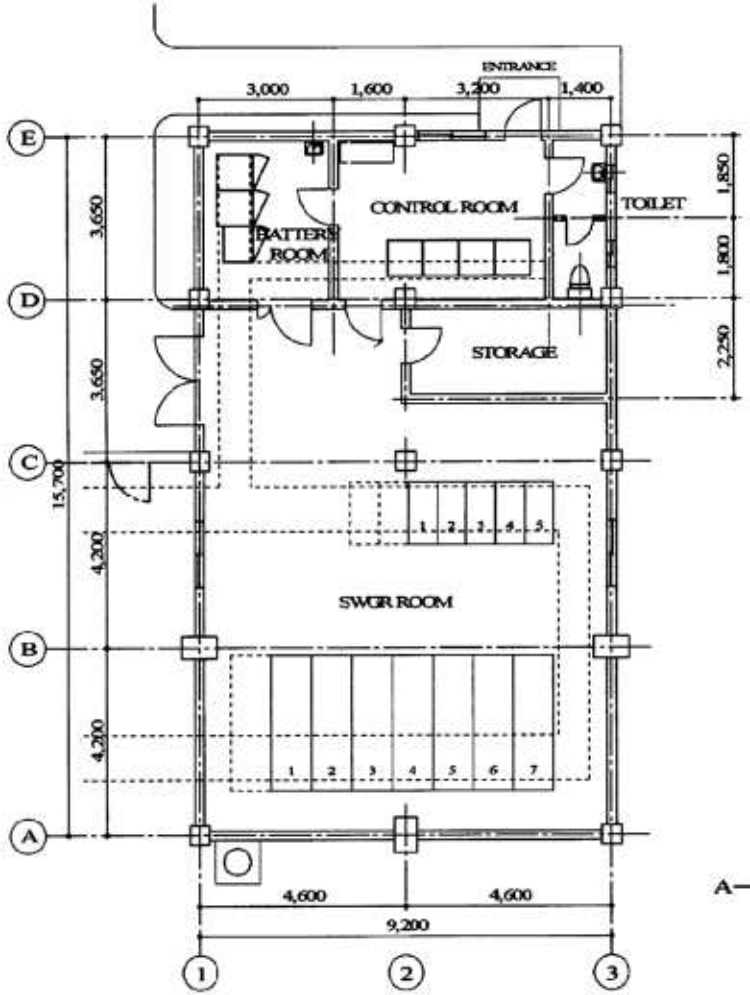

1. EXTERIOR FINISHING	
TOP ROOF	PROTECTION CONCRETE T=60, with meshed wire WATER-PROOF COATING
EXTERIOR WALL	CONCRETE BLOCK t=200, MORTAL TROWEL PAINTING FINISH (EP FOR EXTERNAL) ON MORTAR

2. INTERIOR FINISHING		
ROOM NAME	FINISHING / SPECIFICATION	
CONTROL ROOM	FLOOR	PORCELAIN TILE 300 x 300 (NON-SLIP TYPE)
	WALL	EP PAINTING FINISH ON MORTAR
	CEILING	SUSPENDED CEILING, DECORATED PLASTER BOARD
STORAGE	FLOOR	DUST PROOF TYPE PAINTING FINISH ON MORTAR
	WALL	EP PAINTING FINISH ON MORTAR
	CEILING	EP PAINTING FINISH
SWGR ROOM	FLOOR	DUST PROOF TYPE PAINTING FINISH ON MORTAR
	WALL	EP PAINTING FINISH ON MORTAR
	CEILING	SUSPENDED CEILING, DECORATED PLASTER BOARD
BATTERY ROOM	FLOOR	ACID RESISTANT TYPE PAINTING FINISH ON MORTAR
	WALL	EP PAINTING FINISH ON MORTAR
	CEILING	EP PAINTING FINISH
TOILET	FLOOR	PORCELAIN TILE 300 x 300 (NON-SLIP TYPE)
	WALL	PORCELAIN TILE 300 x 300
	CEILING	SUSPENDED CEILING, DECORATED PLASTER BOARD

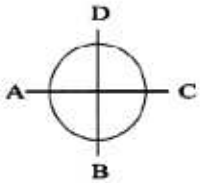

DWG No. S-A-03
MWANYANYA S/S & WELEZO S/S CONTROL ROOM
PLAN, FINISHING SCHEDULE

S=1/150

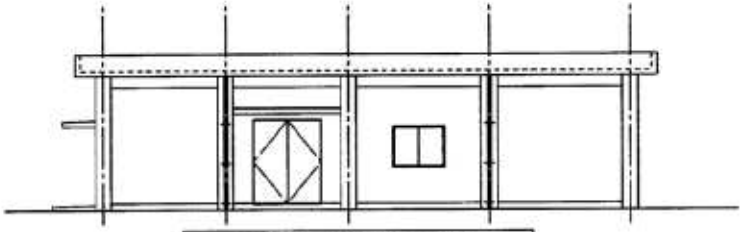

A-A ELEVATION 1/200

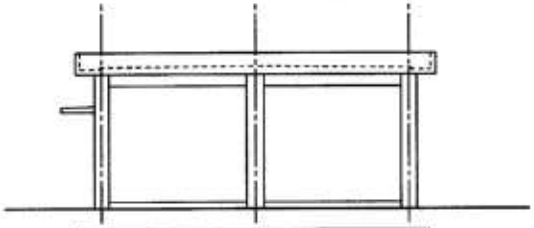

B-B ELEVATION 1/200

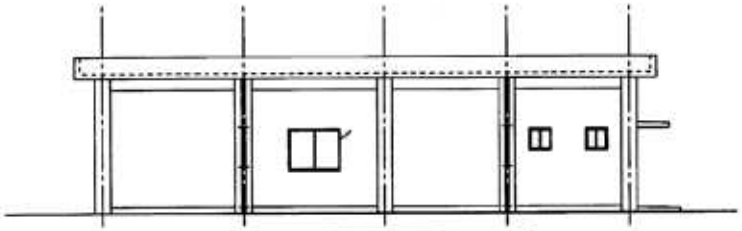

C-C ELEVATION 1/200

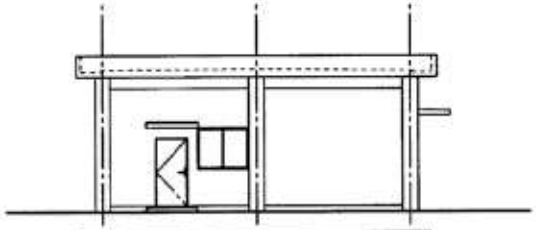

D-D ELEVATION 1/200

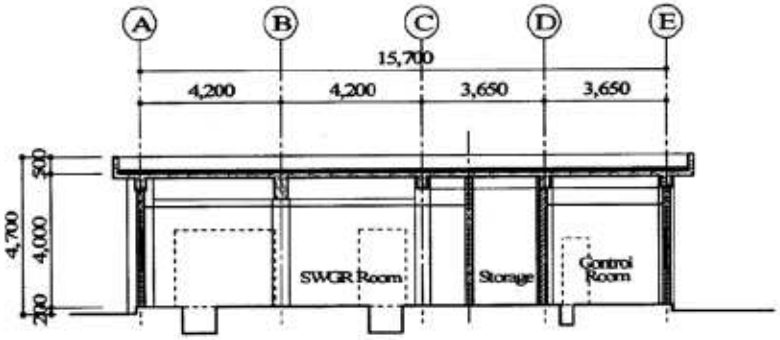

SECTION-1 1/200

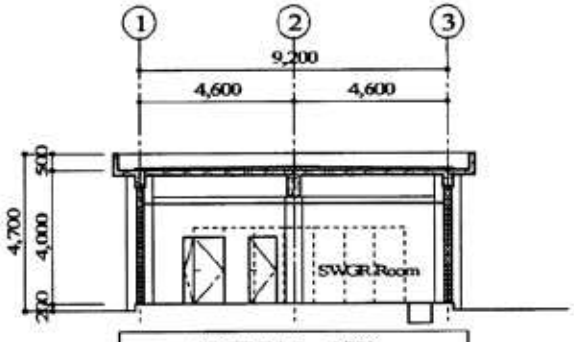

SECTION-2 1/200

DWG No. S-A-04
MWANYANYA S/S & WELEZO S/S CONTROL ROOM
ELEVATION, SECTION

S=1/200

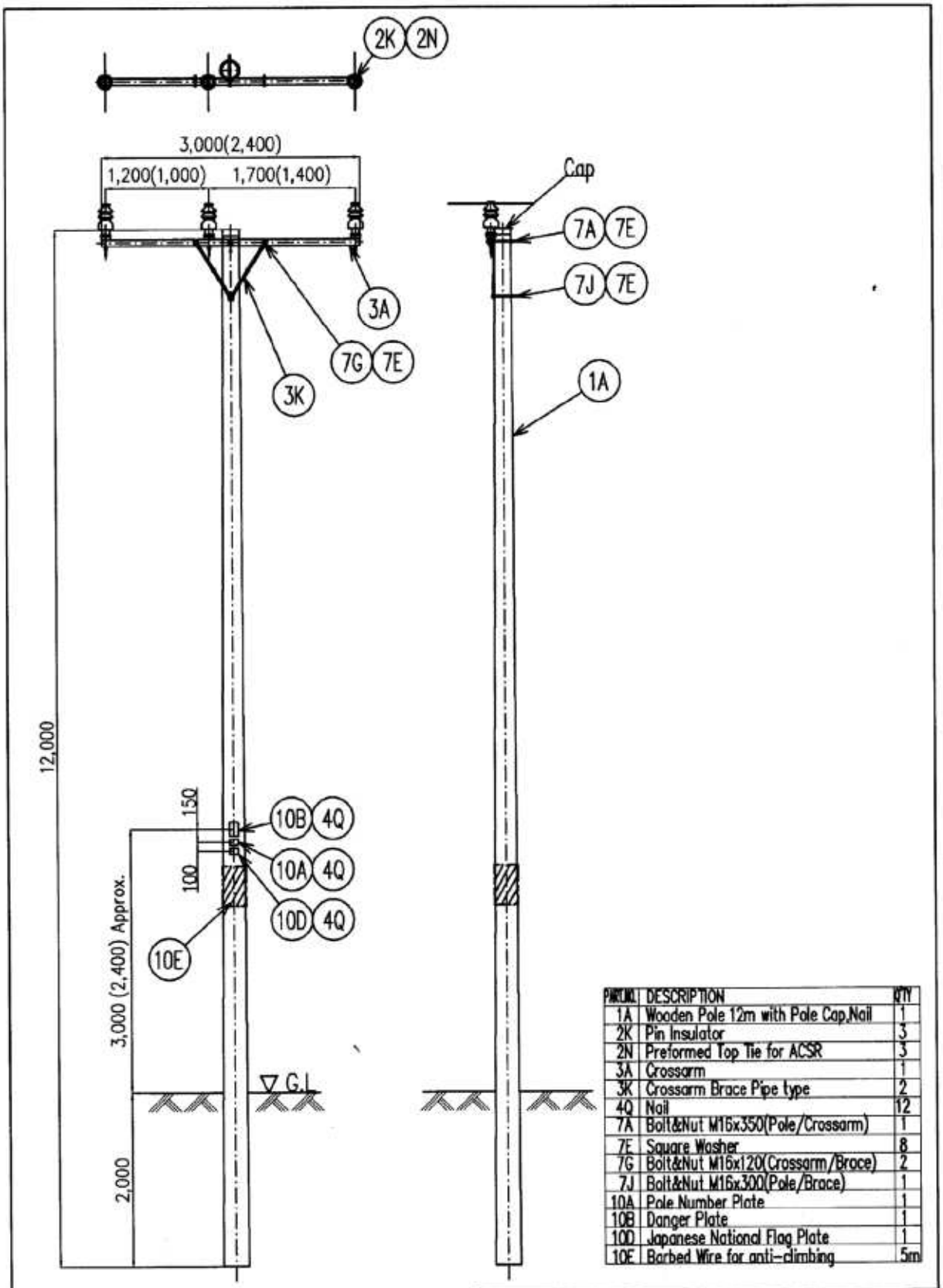

PARTS NO.	DESCRIPTION	QTY
1A	Wooden Pole 12m with Pole Cap,Nail	1
2K	Pin Insulator	3
2N	Preformed Top Tie for ACSR	3
3A	Crossarm	1
3K	Crossarm Brace Pipe type	2
4Q	Nail	12
7A	Bolt&Nut M16x350(Pole/Crossarm)	1
7E	Square Washer	8
7G	Bolt&Nut M16x120(Crossarm/Brace)	2
7J	Bolt&Nut M16x300(Pole/Brace)	1
10A	Pole Number Plate	1
10B	Danger Plate	1
10D	Japanese National Flag Plate	1
10E	Barbed Wire for anti-climbing	5m

* Values in ( ) shall be applied to 11kV.

SCALE	1:60	
TITLE	[Type 3A/1A] 33/11kV [illegible] (07) ACSR[illegible] 33/ 11kV Intermediate Pole (Line Angle 0°) for ACSR	DWG. NO. IT-01

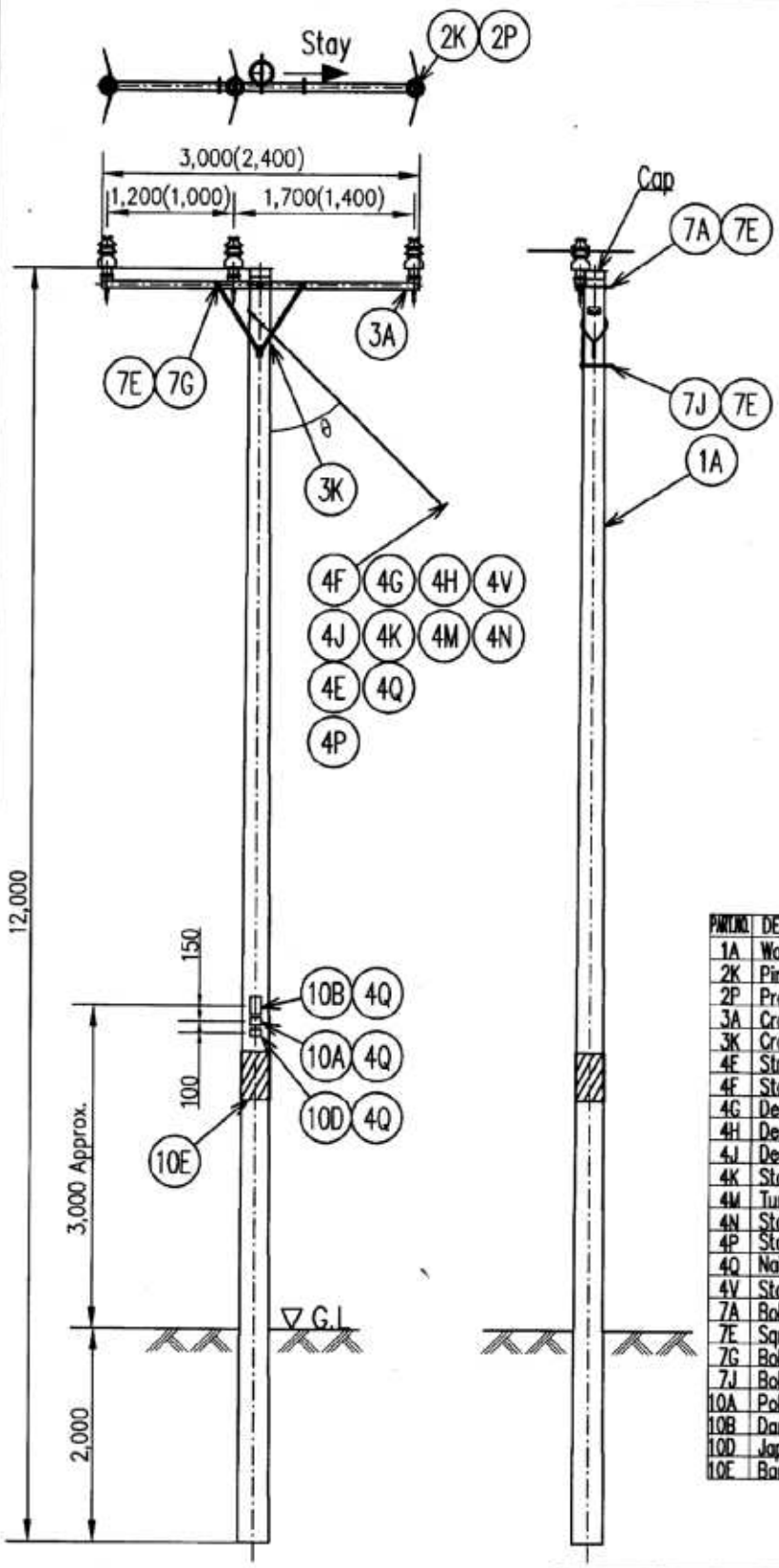

PART NO.	DESCRIPTION	QTY
1A	Wooden Pole 12m with Pole Cap,Nail	1
2K	Pin Insulator	3
2P	Preformed Side Tie for ACSR	3
3A	Crossarm	1
3K	Crossarm Brace Pipe type	2
4E	Strain Plate for Wooden pole	1
4F	Stay Wire 45sq.mm with Ivy Protection	15m
4G	Dead End Grip for Wooden Pole 45	1
4H	Dead End Grip for Insulator 45	2
4J	Dead End Grip for Thimble 45	1
4K	Stay Insulator	1
4M	Turnbuckle	1
4N	Stay Rod	1
4P	Stay Plate	1
4Q	Nail	16
4V	Staple	4
7A	Bolt&Nut M16x350(Pole/Crossarm)	1
7E	Square Washer	8
7G	Bolt&Nut M16x120(Crossarm/Brace)	2
7J	Bolt&Nut M16x300(Pole/Brace)	1
10A	Pole Number Plate	1
10B	Danger Plate	1
10D	Japanese National Flag Plate	1
10E	Barbed Wire for anti-climbing	5m

* Values in ( ) shall be applied to 11kV.
* 30°≤θ≤45°

SCALE	1:60	
TITLE [Type 3B/1B] 33/11kV [illegible] (~30°) ACSR[illegible] 33/11kV Light Angle Pole (Line Angle up to 30°) for ACSR		DWG. NO. IT-02

11A

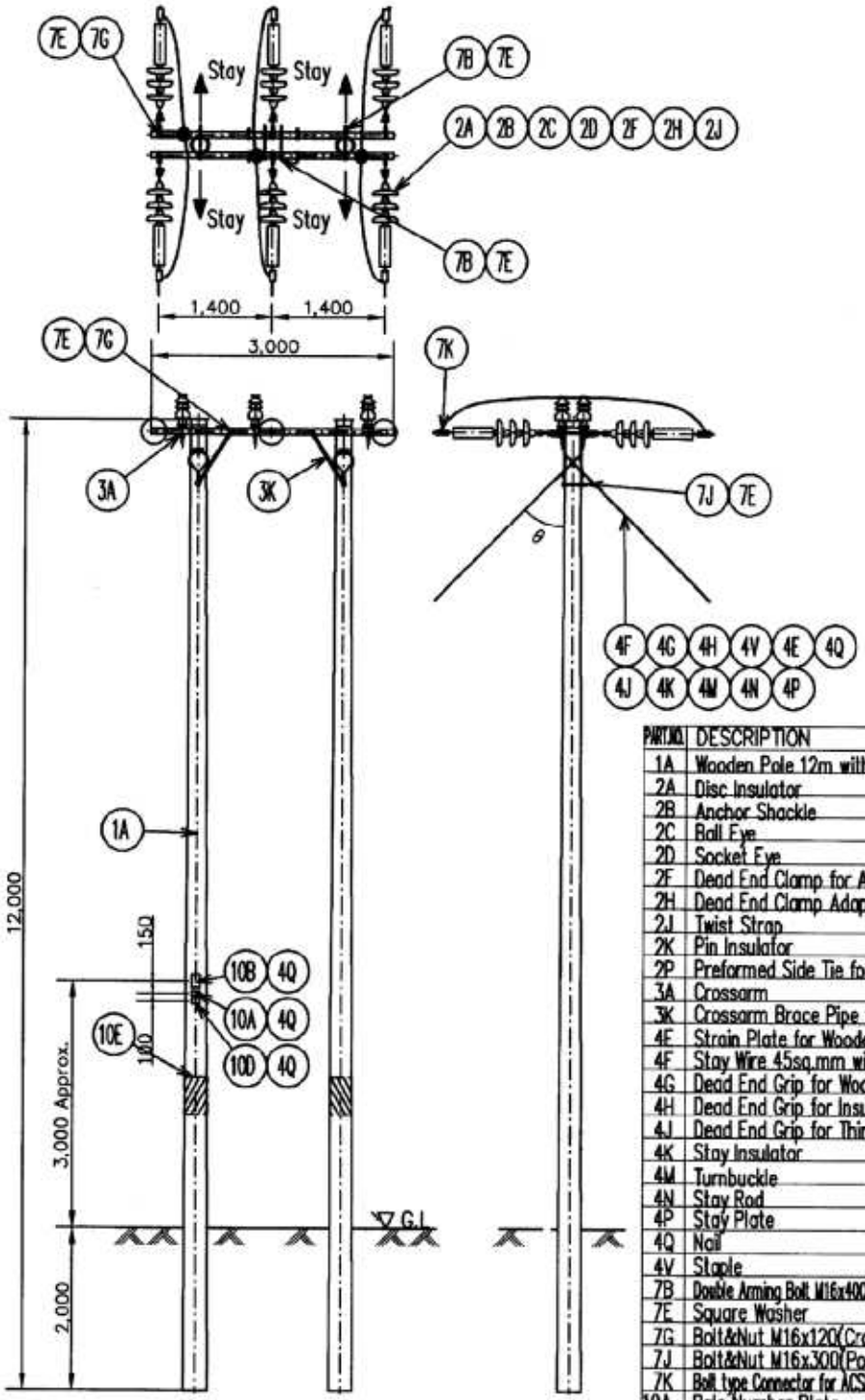

PART NO.	DESCRIPTION	QTY
1A	Wooden Pole 12m with Pole Cap,Nail	2
2A	Disc Insulator	18
2B	Anchor Shackle	6
2C	Ball Eye	6
2D	Socket Eye	6
2F	Dead End Clamp for ACSR	6
2H	Dead End Clamp Adaptor	6
2J	Twist Strap	12
2K	Pin Insulator	3
2P	Preformed Side Tie for ACSR	3
3A	Crossarm	2
3K	Crossarm Brace Pipe type	4
4E	Strain Plate for Wooden pole	4
4F	Stay Wire 45sq.mm with Ivy Protection	60m
4G	Dead End Grip for Wooden Pole 45	4
4H	Dead End Grip for Insulator 45	8
4J	Dead End Grip for Thimble 45	4
4K	Stay Insulator	4
4M	Turnbuckle	4
4N	Stay Rod	4
4P	Stay Plate	4
4Q	Nail	28
4V	Staple	16
7B	Double Arming Bolt M16x400(Pole/W-Crossarm.)	4
7E	Square Washer	24
7G	Bolt&Nut M16x120(Crossarm/Brace)	10
7J	Bolt&Nut M16x300(Pole/Brace)	2
7K	Ball type Connector for ACSR	6
10A	Pole Number Plate	1
10B	Danger Plate	1
10D	Japanese National Flag Plate	1
10E	Barbed Wire for anti-climbing	10m

* 30°≤θ≤45°

SCALE	1:80	
TITLE [Type 3C] 33kV [illegible] ACSR 33kV Section Pole for ACSR		DWG. NO. IT-03

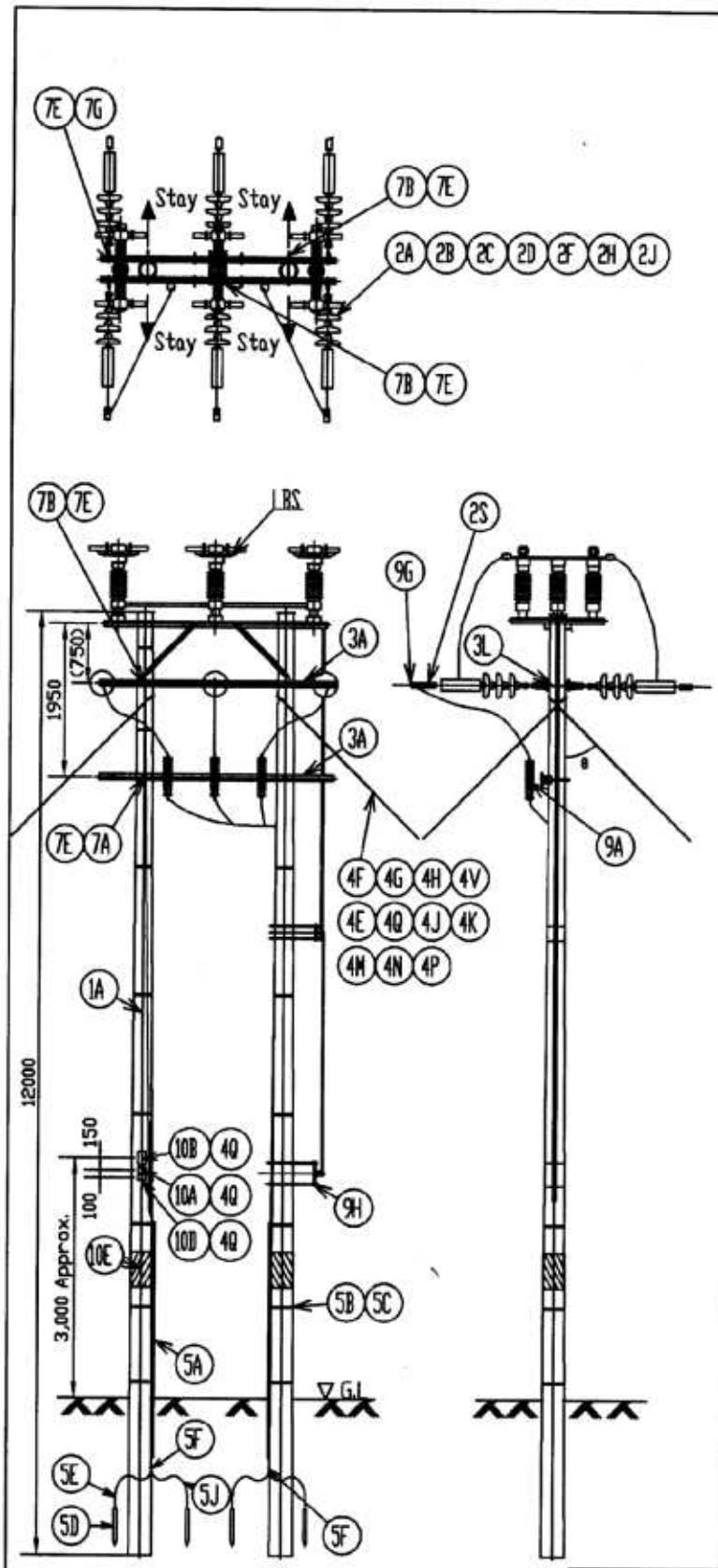

PARTS NO.	DESCRIPTION	QTY
1A	Wooden Pole 12m with Pole Cap,Nail	2
2A	Disc Insulator	18(12)
2B	Anchor Shackle	6
2C	Ball Eye	6
2D	Socket Eye	6
2F	Dead End Clamp for ACSR	6
2H	Dead End Clamp Adaptor	6
2J	Twist Strap	12
2S	Compression Connector for ACSR	6
3A	Crossarm	3
4E	Strain Plate for Wooden pole	4
4F	Stay Wire 45sqmm with Ivy Protection	60m
4G	Dead End Grip for Wooden Pole 45	4
4H	Dead End Grip for Insulator 45	8
4J	Dead End Grip for Thimble 45	4
4K	Stay Insulator	4
4M	Turnbuckle	4
4N	Stay Rod	4
4P	Stay Plate	4
4Q	Nail	28
4V	Staple	16
5A	PVC Protection Pipe(L=4.0m)	2
5B	Stainless Band(L=1200mm)	14
5C	Ring Saddle For Stainless Band	6
5D	Ground Rod	12
5E	Lead Wire Terminal	6
5F	Compression Connector(Cu38/Cu22)	2
5J	IV 38sqmm	20m
7A	Bolt & Nut M16x250(Pole/Crossarm)	4
7B	Double Arming Bolt M16x400(Pole/V-Crossarm)	4
7E	Square Washer	24
7G	Bolt & Nut M16x1200(Crossarm/Brace&Strap)	6
7K	Bolt type Connector for ACSR	6
9A	Lightning Arrester	3
9G	PG Clamp	3
9H	LBS attachment	1
10A	Pole Number Plate	1
10B	Danger Plate	1
10D	Japanese National Flag Plate	1
10E	Barbed Wire for anti-climbing	10m

* Values in ( ) shall be applied to 11kV.
* 30°≤θ≤45°

SCALE	1:80	
TITLE	[Type 3B/1B] 33/11kV [illegible] (R[illegible]) ACSR 33/11kV Section Pole with LBS for ACSR	DWG. NO. IT-04

HA

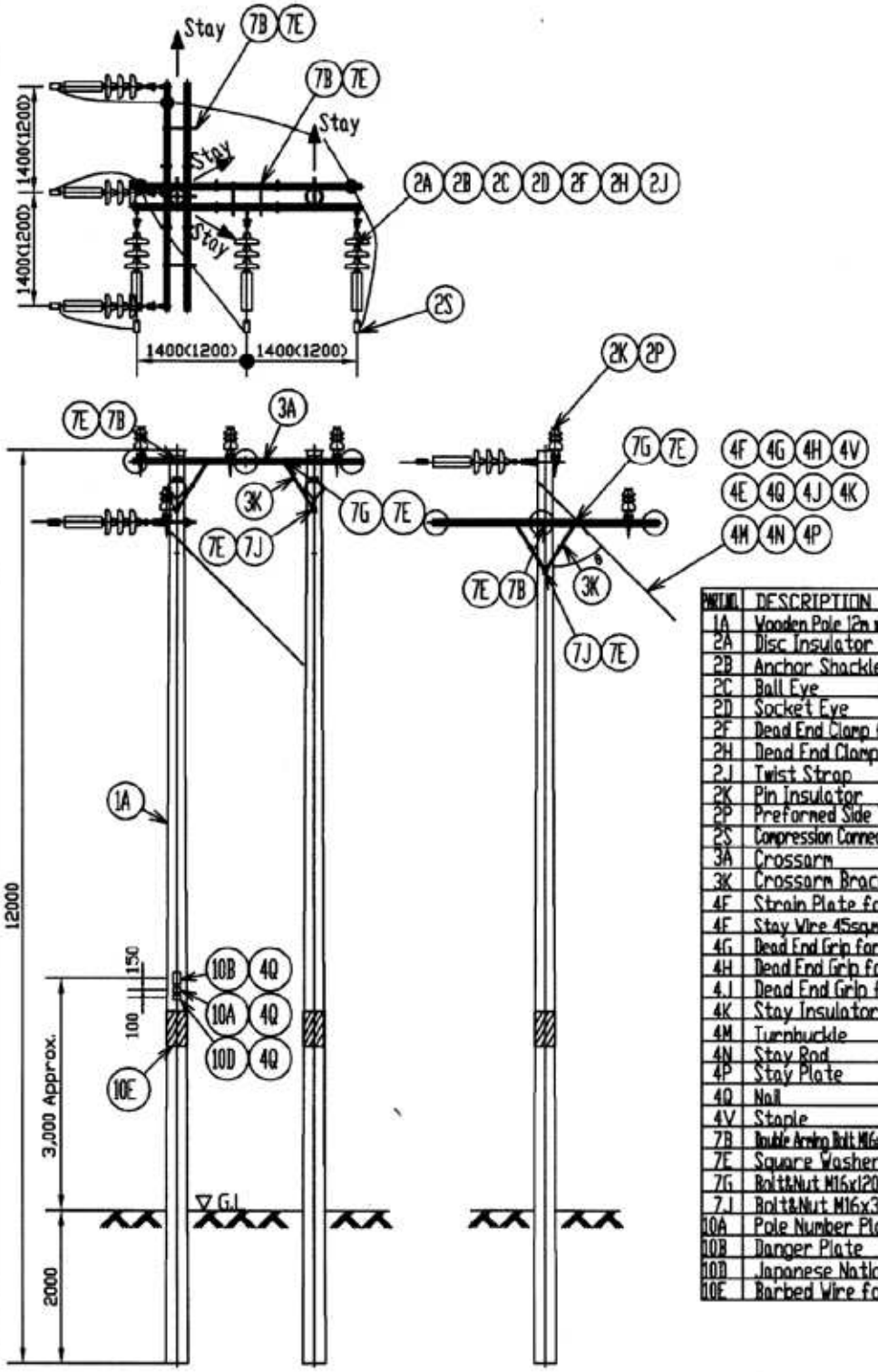

PART NO.	DESCRIPTION	QTY
1A	Wooden Pole 12m with Pole Cap,Nail	2
2A	Disc Insulator	[illegible]
2B	Anchor Shackle	6
2C	Ball Eye	6
2D	Socket Eye	6
2F	Dead End Clamp for ACSR	6
2H	Dead End Clamp Adaptor	6
2J	Twist Strap	12
2K	Pin Insulator	3
2P	Preformed Side Tie for ACSR	3
2S	Compression Connector for ACSR	6
3A	Crossarm	4
3K	Crossarm Brace Pipe type	8
4F	Strain Plate for Wooden pole	4
4F	Stay Wire 45sqmm with Ivy Protection	60m
4G	Dead End Grip for Wooden Pole 45	4
4H	Dead End Grip for Insulator 45	8
4J	Dead End Grip for Thimble 45	4
4K	Stay Insulator	4
4M	Turnbuckle	4
4N	Stay Rod	4
4P	Stay Plate	4
4Q	Nail	28
4V	Staple	8
7B	Double Arming Bolt M16x400(Pole/V-Crossarm)	7
7E	Square Washer	42
7G	Bolt&Nut M16x120(Crossarm/Brace)	14
7J	Bolt&Nut M16x300(Pole/Brace)	3
10A	Pole Number Plate	1
10B	Danger Plate	1
10D	Japanese National Flag Plate	1
10E	Barbed Wire for anti-climbing	10m

* Values in ( ) shall be applied to 11kV.
* 30°≤θ≤45°

SCALE	1:80	
TITLE [illegible] 33/11kV [illegible] (60-90°) ACSR 33/11kV Heavy Angle Pole (Line Angle 60° to 90°) for ACSR		DWG. NO. IT-05

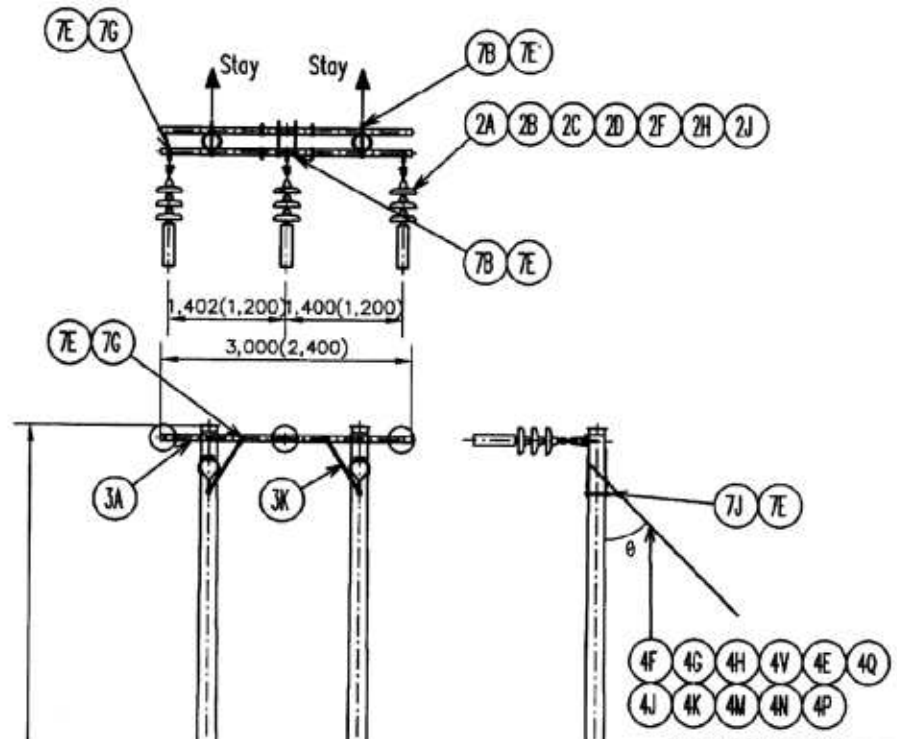

PART NO.	DESCRIPTION	QTY
1A	Wooden Pole 12m with Pole Cap,Nail	2
2A	Disc Insulator	9(6)
2B	Anchor Shackle	3
2C	Ball Eye	3
2D	Socket Eye	3
2F	Dead End Clamp for ACSR	3
2H	Dead End Clamp Adaptor	3
2J	Twist Strap	6
3A	Crossarm	2
3K	Crossarm Brace Pipe type	4
4E	Strain Plate for Wooden pole	2
4F	Stay Wire 45sq.mm with Ivy Protection	30m
4G	Dead End Grip for Wooden Pole 45	2
4H	Dead End Grip for Insulator 45	4
4J	Dead End Grip for Thimble 45	2
4K	Stay Insulator	2
4M	Turnbuckle	2
4N	Stay Rod	2
4P	Stay Plate	2
4Q	Nail	28
4V	Staple	16
7B	Double Arming Bolt M16x400(Pole/W-Crossarm)	4
7E	Square Washer	24
7G	Bolt&Nut M16x120(Crossarm/Brace)	10
7J	Bolt&Nut M16x300(Pole/Brace)	2
10A	Pole Number Plate	1
10B	Danger Plate	1
10D	Japanese National Flag Plate	1
10E	Barbed Wire for anti-climbing	10m

* Values in ( ) shall be applied to 11kV.
* 30°≤θ≤45°

SCALE	1:80	
TITLE [Type 3F/1F] 33/11kV 100mm² ACSR 33/11kV Terminal Pole for ACSR		DWG. NO. IT-06

HA

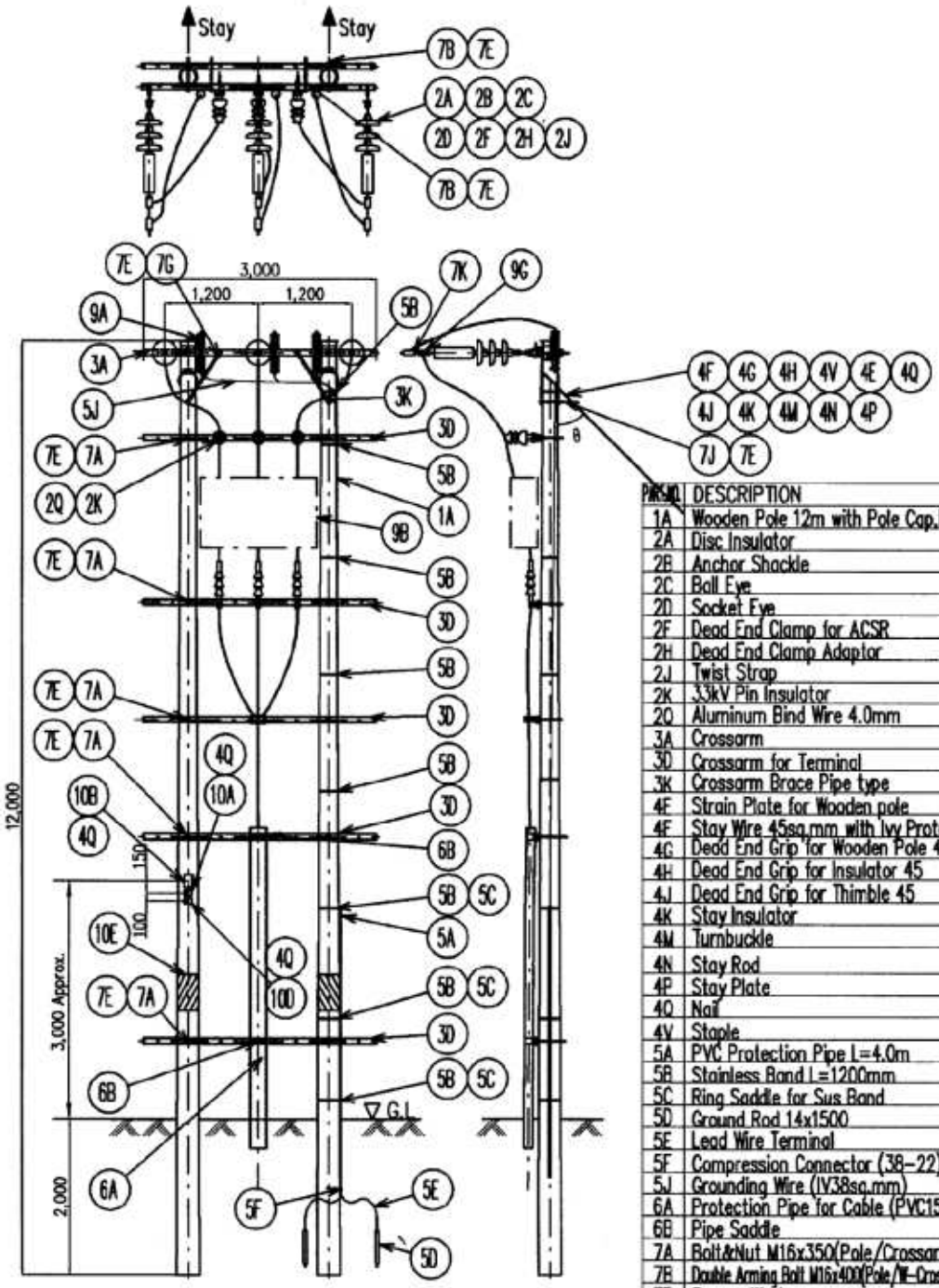

PARTS NO.	DESCRIPTION	QTY
1A	Wooden Pole 12m with Pole Cap,Nail	2
2A	Disc Insulator	9(6)
2B	Anchor Shackle	3
2C	Ball Eye	3
2D	Socket Eye	3
2F	Dead End Clamp for ACSR	3
2H	Dead End Clamp Adaptor	3
2J	Twist Strap	6
2K	33kV Pin Insulator	3
2Q	Aluminum Bind Wire 4.0mm	9m
3A	Crossarm	2
3D	Crossarm for Terminal	5
3K	Crossarm Brace Pipe type	4
4E	Strain Plate for Wooden pole	2
4F	Stay Wire 45sq.mm with Ivy Protection	30m
4G	Dead End Grip for Wooden Pole 45	2
4H	Dead End Grip for Insulator 45	4
4J	Dead End Grip for Thimble 45	2
4K	Stay Insulator	2
4M	Turnbuckle	2
4N	Stay Rod	2
4P	Stay Plate	2
4Q	Nail	20
4V	Staple	8
5A	PVC Protection Pipe L=4.0m	1
5B	Stainless Band L=1200mm	8
5C	Ring Saddle for Sus Band	3
5D	Ground Rod 14x1500	2
5E	Lead Wire Terminal	2
5F	Compression Connector (38-22)	1
5J	Grounding Wire (IV38sq.mm)	20m
6A	Protection Pipe for Cable (PVC150)	4m
6B	Pipe Saddle	2
7A	Bolt&Nut M16x350(Pole/Crossarm)	10
7B	Double Arming Bolt M16x400(Pole/W-Crossarm)	4
7E	Square Washer	40
7G	Bolt&Nut M16x120(Crossarm/Brace)	7
7J	Bolt&Nut M16x300(Pole/Brace)	2
7K	Bolt type Connector for ACSR	3
9A	Lightning Arrester	3
9B	Line Switch	1
9C	Bolt type Connector	3
10A	Pole Number Plate	1
10B	Danger Plate	1
10D	Japanese National Flag Plate	1
10E	Barbed Wire for anti-climbing	10m

* Values in ( ) shall be applied to 11kV.
* 30°≤θ≤45°

SCALE	1:80	
TITLE	[Type 3C/1C] 33/11kV 線路(ラインスイッチ付) ACSR用 33/11kV Terminal Pole with Line Switch for ACSR	DWG. NO. IT-07

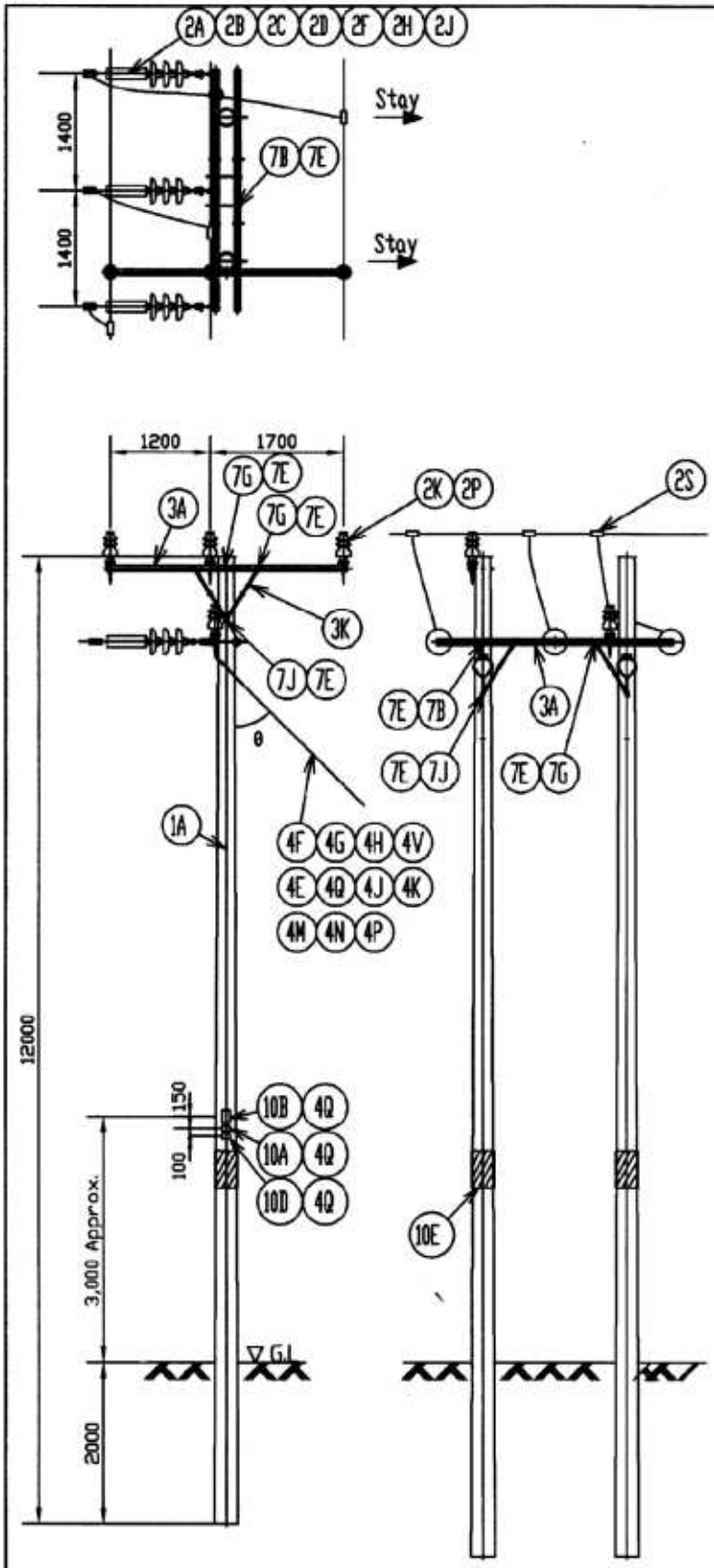

PART NO.	DESCRIPTION	QTY
1A	Wooden Pole 12m with Pole Cap,Nail	2
2A	Disc Insulator	9
2B	Anchor Shackle	3
2C	Ball Eye	3
2D	Socket Eye	3
2F	Dead End Clamp for ACSR	3
2H	Dead End Clamp Adaptor	3
2J	Twist Strap	6
2K	Pin Insulator	4
2P	Preformed Side Tie for ACSR	4
2S	Compression Connector for ACSR	6
3A	Crossarm	3
3K	Crossarm Brace Pipe type	6
4F	Strain Plate for Wooden pole	2
4E	Stay Wire 45sqmm with Ivy Protection	30m
4G	Dead End Grip for Wooden Pole 45	2
4H	Dead End Grip for Insulator 45	4
4J	Dead End Grip for Thimble 45	2
4K	Stay Insulator	2
4M	Turnbuckle	2
4N	Stay Rod	2
4P	Stay Plate	2
4Q	Nail	20
4V	Staple	8
7B	Double Arming Bolt M16x400(Pole/V-Crossarm)	2
7E	Square Washer	27
7G	Bolt&Nut M16x120(Crossarm/Brace)	9
7J	Bolt&Nut M16x300(Pole/Brace)	3
10A	Pole Number Plate	1
10B	Danger Plate	1
10D	Japanese National Flag Plate	1
10E	Barbed Wire for anti-climbing	10m

* 30°≤θ≤45°

SCALE	1:80	
TITLE	(Type 3H) 33kV T-off Pole for ACSR 33kV T-off Pole for ACSR	DWG. NO. JT-08

4A

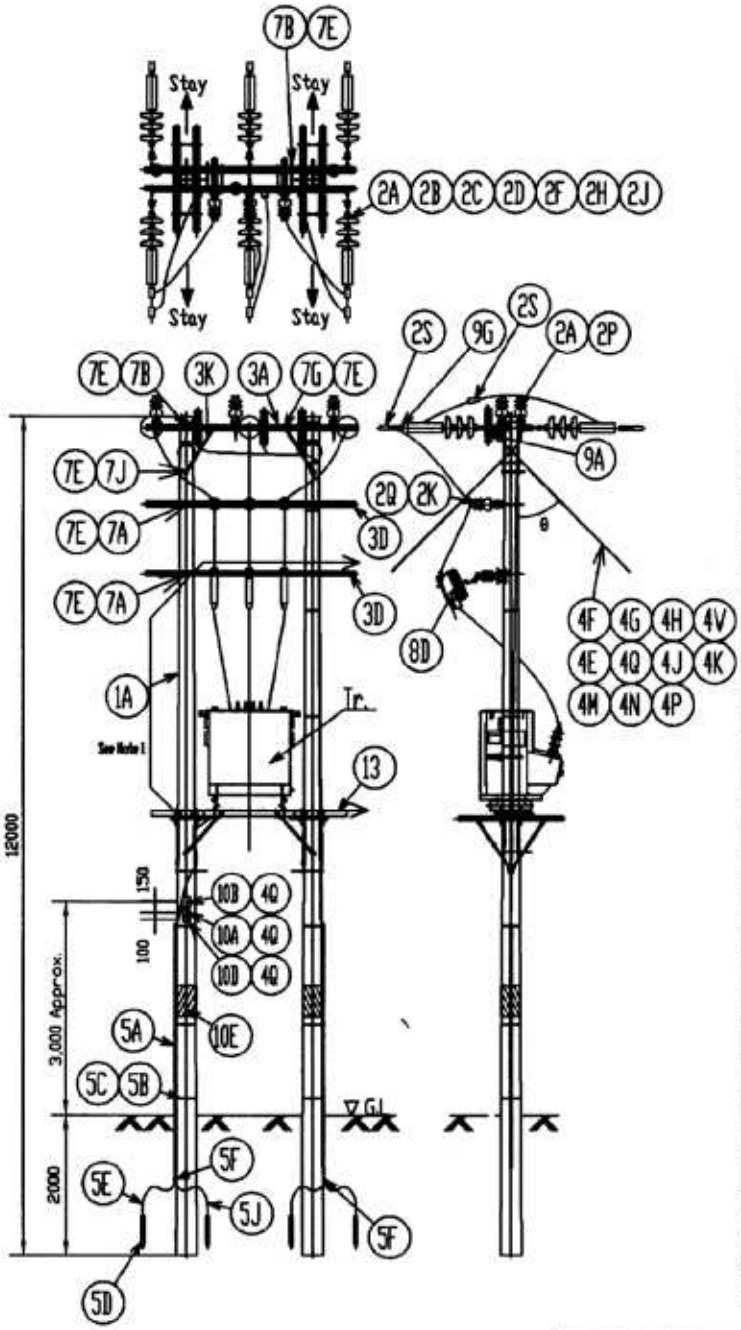

ARTICLE	DESCRIPTION	QTY
1A	Wooden Pole 12m with Pole Cap Nail	2
2A	Disc Insulator	18
2B	Anchor Shackle	6
2C	Ball Eye	6
2D	Socket Eye	6
2F	Dead End Clamp for ACSR	6
2H	Dead End Clamp Adaptor	6
2J	Twist Strap	12
2K	Pin Insulator	6
2P	Preformed Side Tie for ACSR	3
2Q	Aluminum Bind Wire 4.0mm	9m
2S	Compression Connector for ACSR	6
3A	Crossarm	2
3B	Crossarm for Terminal	2
3K	Crossarm Brace Pipe type	4
4F	Strain Plate for Wooden pole	4
4F	Stay Wire 45sqmm with Ivy Protection	60m
4G	Dead End Grip for Wooden Pole 45	4
4H	Dead End Grip for Insulator 45	8
4J	Dead End Grip for Thimble 45	4
4K	Stay Insulator	4
4M	Turnbuckle	4
4N	Stay Rod	4
4P	Stay Plate	4
4Q	Nail	28
4V	Staple	16
5A	PVC Protection Pipe L=4.0m	2
5B	Stainless Band L=1200mm	16
5C	Ring Saddle for Sus Band	6
5D	Ground Rod 14x1500	12
5E	Lead Wire Terminal	6
5F	Compression Connector (38-22)	2
5J	Grounding Wire (IV38sqmm)	20m
7A	Bolt&Nut M16x350(Pole/Crossarm)	4
7B	Double Arming Bolt M16x400(Pole/V-Crossarm)	4
7F	Square Washer	46
7G	Bolt&Nut M16x120(Crossarm/Brace)	10
7J	Bolt&Nut M16x300(Pole/Brace)	2
8D	Fused Cutout Switch	3
9A	Lightning Arrester	3
9G	Bolt type Connector	3
10A	Pole Number Plate	1
10B	Danger Plate	1
10D	Japanese National Flag Plate	1
10E	Barbed Wire for anti-climbing	10m
13	Tr. Support	1

SCALE	1:100	
TITLE	(Type 3.0) 33kV 区間用(鉄筋コンクリート)ACSR用 33kV Transformer Pole (Section Type) for ACSR	DWG. NO. IT-09

※ 30°≦θ≦45°

Note 1: Distribution transformer and cut out switches shall be provided by ZECO

HA

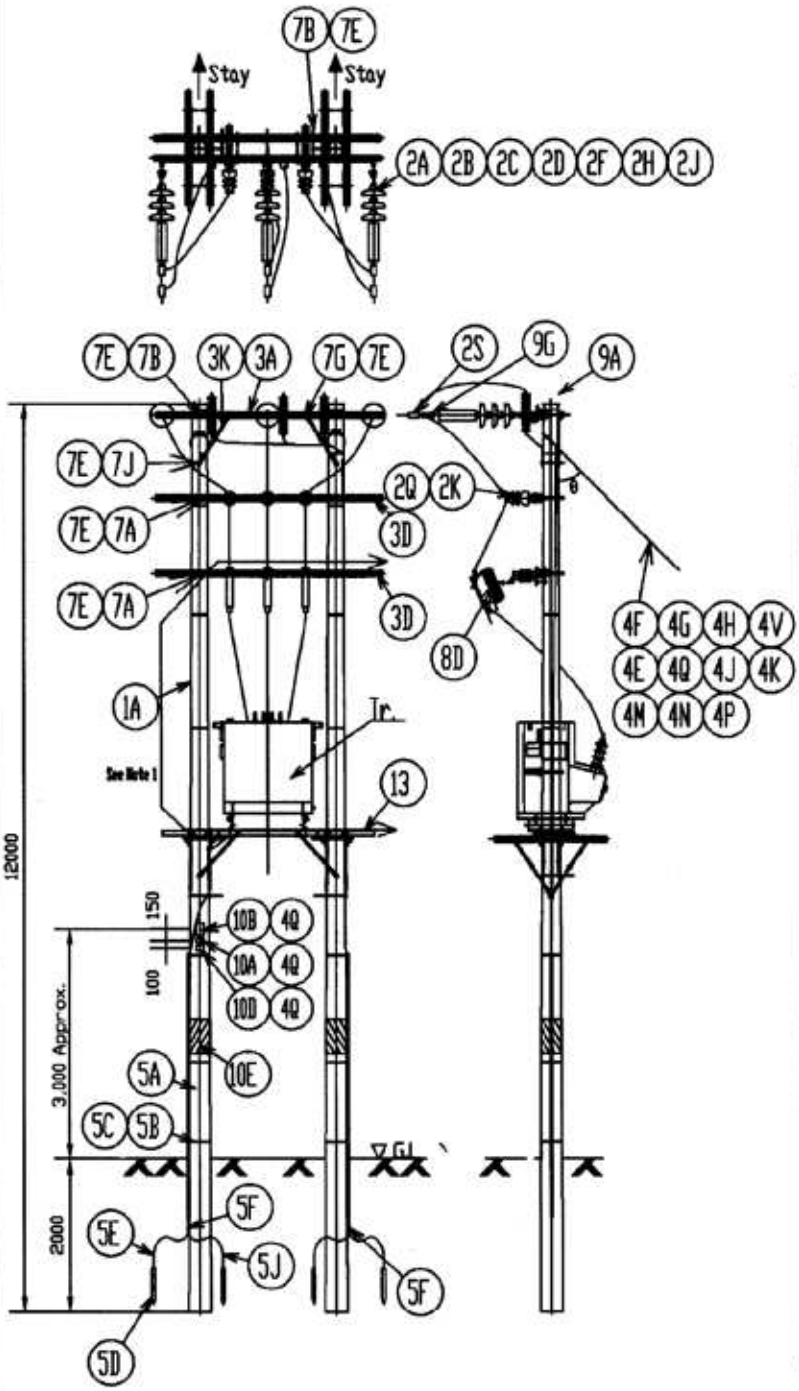

MARK	DESCRIPTION	QTY
1A	Wooden Pole 12m with Pole Cap Nail	2
2A	Disc Insulator	9
2B	Anchor Shackle	3
2C	Ball Eye	3
2D	Socket Eye	3
2F	Dead End Clamp for ACSR	3
2H	Dead End Clamp Adaptor	3
2J	Twist Strap	6
2K	Pin Insulator	3
2Q	Aluminum Bind Wire 4.0mm	9m
2S	Compression Connector for ACSR	3
3A	Crossarm	2
3D	Crossarm for Terminal	2
3K	Crossarm Brace Pipe type	4
4F	Strain Plate for Wooden pole	2
4F	Stay Wire 45sqmm with Ivy Protection	30m
4G	Dead End Grip for Wooden Pole 45	2
4H	Dead End Grip for Insulator 45	4
4J	Dead End Grip for Thimble 45	2
4K	Stay Insulator	2
4M	Turnbuckle	2
4N	Stay Rod	2
4P	Stay Plate	2
4Q	Nail	20
4V	Staple	8
5A	PVC Protection Pipe L=4.0m	2
5B	Stainless Band L=1200mm	16
5C	Ring Saddle for Sus Band	3
5D	Ground Rod 14x1500	2
5E	Lead Wire Terminal	2
5F	Compression Connector (38-22)	1
5J	Grounding Wire (IV38sqmm)	20m
7A	Bolt&Nut M16x350(Pole/Crossarm)	4
7B	Double Arming Bolt M16x400(Pole/V-Crossarm)	4
7E	Square Washer	40
7G	Bolt&Nut M16x120(Crossarm/Brace)	7
7J	Bolt&Nut M16x300(Pole/Brace)	2
8D	Fused Cutout Switch	3
9A	Lightning Arrester	3
9G	Bolt type Connector	3
10A	Pole Number Plate	1
10B	Danger Plate	1
10D	Japanese National Flag Plate	1
10E	Barbed Wire for anti-climbing	10m
13	Tr. Support	1

※ 30°≦θ≦45°

Note 1: Distribution transformer and cut out switches shall be provided by ZECO

SCALE	1:100	
TITLE (Type 3C) 33kV 変圧器(ターミナル)ACSR用 33kV Transformer Pole (Terminal Type) for ACSR		DWG. NO. IT-10

HA