図　　面

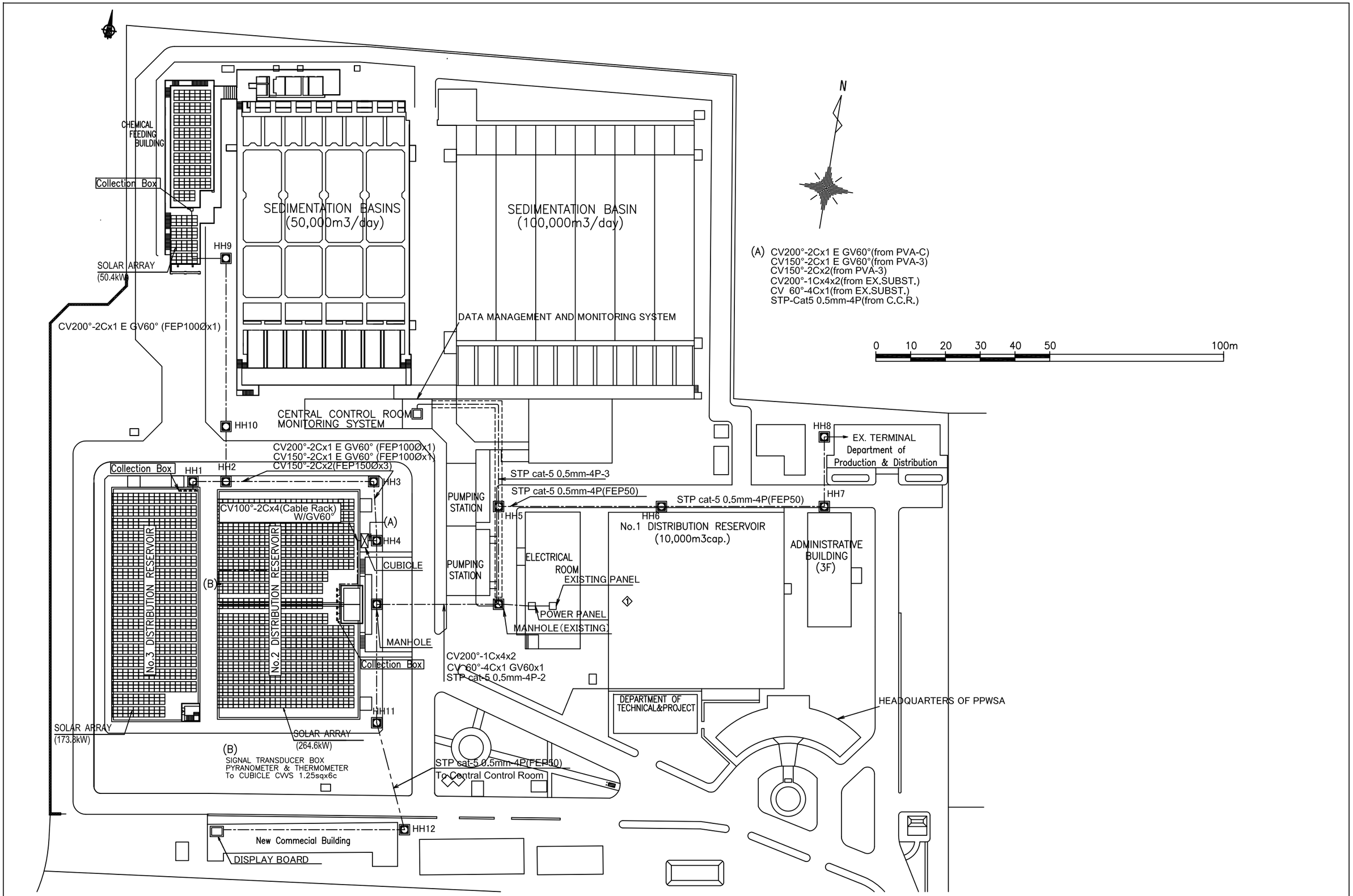

	PROJECT	COUNTRY	SHEET CONTENTS	DRAWING NO.
JAPAN INTERNATIONAL COOPERATION AGENCY	Preparatory Survey on the Project for Clean Energy Promotion Using Solar Photovoltaic System	The Kingdom of Cambodia	Overall Layout at Phum Prek Water Treatment Plant (Scale: S=1:1000)	PPWSA-01-01N

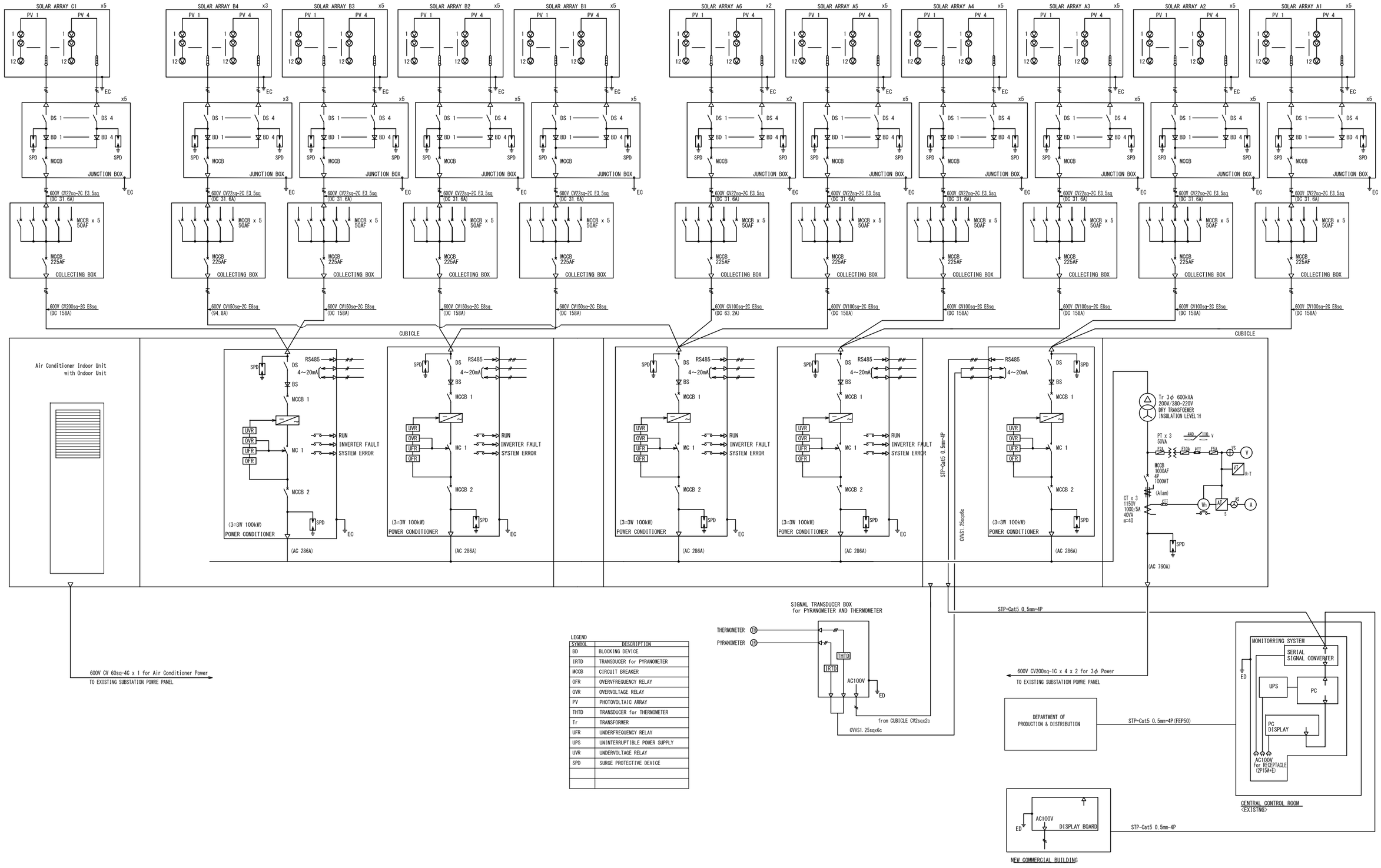

LEGEND

SYMBOL	DESCRIPTION
BD	BLOCKING DEVICE
IRTD	TRANSDUCER for PYRANOMETER
MCCB	CIRCUIT BREAKER
OFR	OVERVFREQUENCY RELAY
OVR	OVERVOLTAGE RELAY
PV	PHOTOVOLTAIC ARRAY
THTD	TRANSDUCER for THERMOMETER
Tr	TRANSFORMER
UFR	UNDERFREQUENCY RELAY
UPS	UNINTERRUPTIBLE POWER SUPPLY
UVR	UNDERVOLTAGE RELAY
SPD	SURGE PROTECTIVE DEVICE

	PROJECT	COUNTRY	SHEET CONTENTS	DRAWING NO.
JAPAN INTERNATIONAL COOPERATION AGENCY	Preparatory Survey on the Project for Clean Energy Promotion Using Solar Photovoltaic System	The Kingdom of Cambodia	SINGLE LINE DIAGRAM FOR PHOTOVOLTAIC POWER PANEL (Scale: NONE)	PPWSA-01-02N

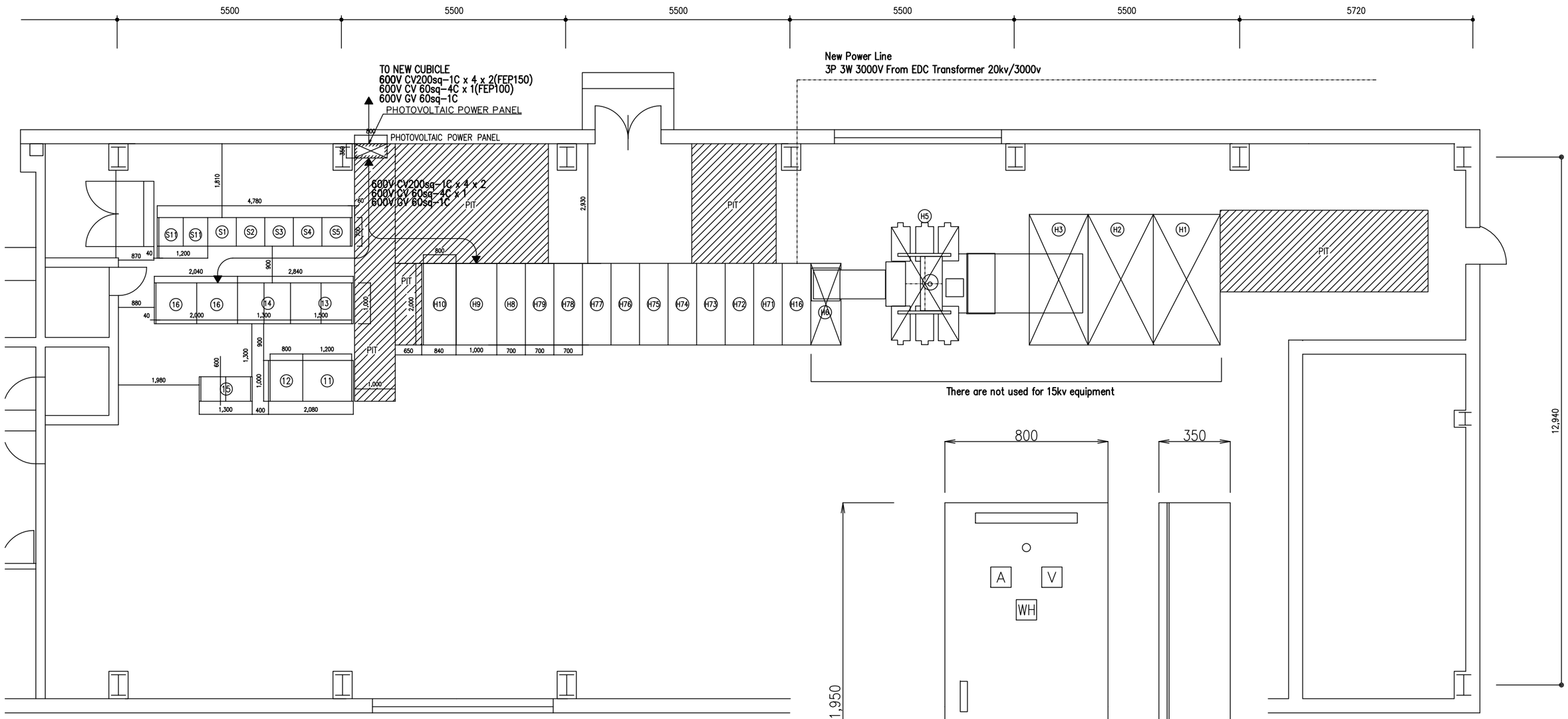

MAIN SUBSTATION

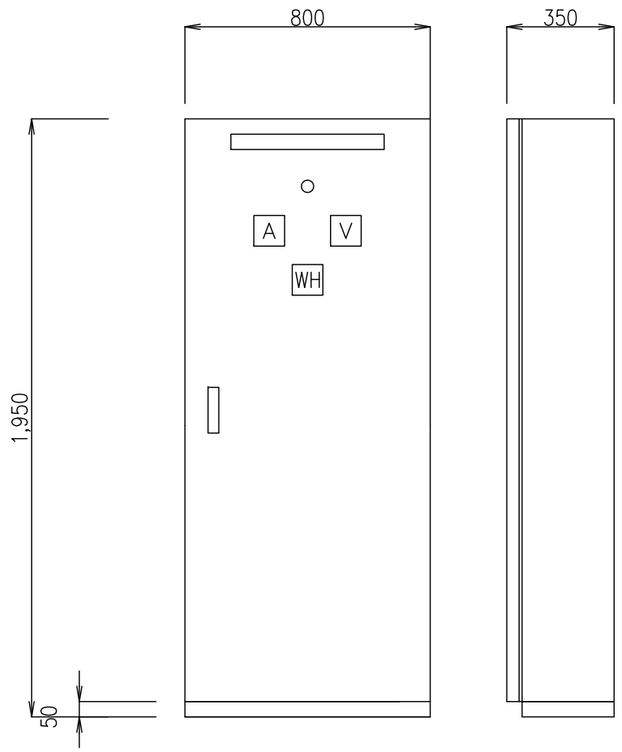

PHOTOVOLTAIC POWER PANEL

No.	DESCRIPTION	No.	DESCRIPTION	No.	DESCRIPTION
H1	Not Used ~~15KV INCOMING PANEL~~	H76	No.4 DISTRIBUTION PUMP PANEL (3KV)	13	MOTOR CONTROL (1) PANEL
H2	Not Used ~~15KV PANEL~~	H77	No.5 DISTRIBUTION PUMP PANEL (3KV)	14	MOTOR CONTROL (2) PANEL
H3	Not Used ~~15KV SERVICE PANEL~~	H78	No.6 DISTRIBUTION PUMP PANEL (3KV)	15	STORAGE BATTERY SYSTEM
H5	Not Used ~~TRANSFORMER (NORMAL LINE)~~	H79	No.7 DISTRIBUTION PUMP PANEL (3KV)	16	MOTOR CONTROL (3) PANEL
H6	Not Used ~~3KV INCOMING PANEL (NORMAL LINE)~~	H8	SERVICE TRANSFORMER SWITCH	S1	LOCAL RELAY PANEL (1) (LRP-S1)
H16	3KV INCOMING PANEL (SPARE LINE)		AND INTAKE PUMP FACILITIES FEEDER	S2	LOCAL RELAY PANEL (2) (LRP-S2)
H71	No.1 TRANSMISSION PUMP PANEL (3KV)	H9	750KVA TRANSFORMER PANEL	S3	LOCAL RELAY PANEL (3) (LRP-S3)
H72	No.2 TRANSMISSION PUMP PANEL (3KV)	H10	LOW VOLTAGE PANEL	S4	LOCAL RELAY PANEL (4) (LRP-S4)
H73	No.1 DISTRIBUTION PUMP PANEL (3KV)			S5	LOCAL RELAY PANEL (5) (LRP-S5)
H74	No.2 DISTRIBUTION PUMP PANEL (3KV)	11	DISTRIBUTION PLANT POWER PANEL	S11	SUBSTATION RELAY PANEL (LRP-S11)
H75	No.3 DISTRIBUTION PUMP PANEL (3KV)	12	DISTRIBUTION BUILDING POWER PANEL		

0 1 2 3m

SCALE (A1=1:50 A3=1:100)

JAPAN INTERNATIONAL COOPERATION AGENCY

PROJECT	COUNTRY	SHEET CONTENTS	DRAWING NO.
Preparatory Survey on the Project for Clean Energy Promotion Using Solar Photovoltaic System	The Kingdom of Cambodia	DETAIL OF ELECTRIC ROOM FOR CABLE CONNECTION (Scale: AS SHOWN)	PPWSA-01-03

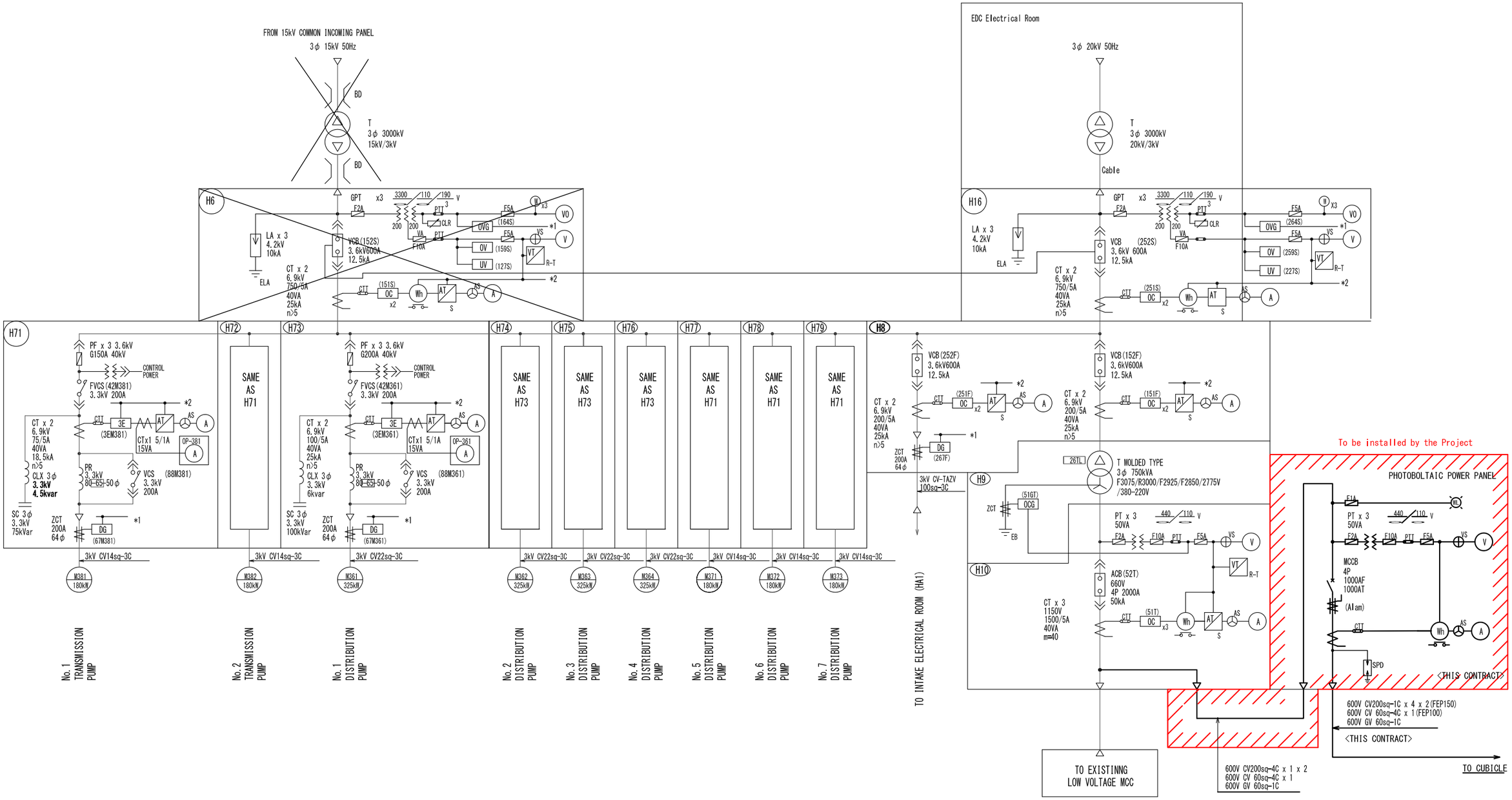

	PROJECT	COUNTRY	SHEET CONTENTS	DRAWING NO.
JAPAN INTERNATIONAL COOPERATION AGENCY	Preparatory Survey on the Project for Clean Energy Promotion Using Solar Photovoltaic System	The Kingdom of Cambodia	SINGLE LINE DIAGRAM OF DISTRIBUTION BOARD AND PHOTOVOLTAIC POWER PANEL (Scale: NONE)	PPWSA-01-04

ROOFTOP OF No.2 DISTRIBUTION RESERVOIR

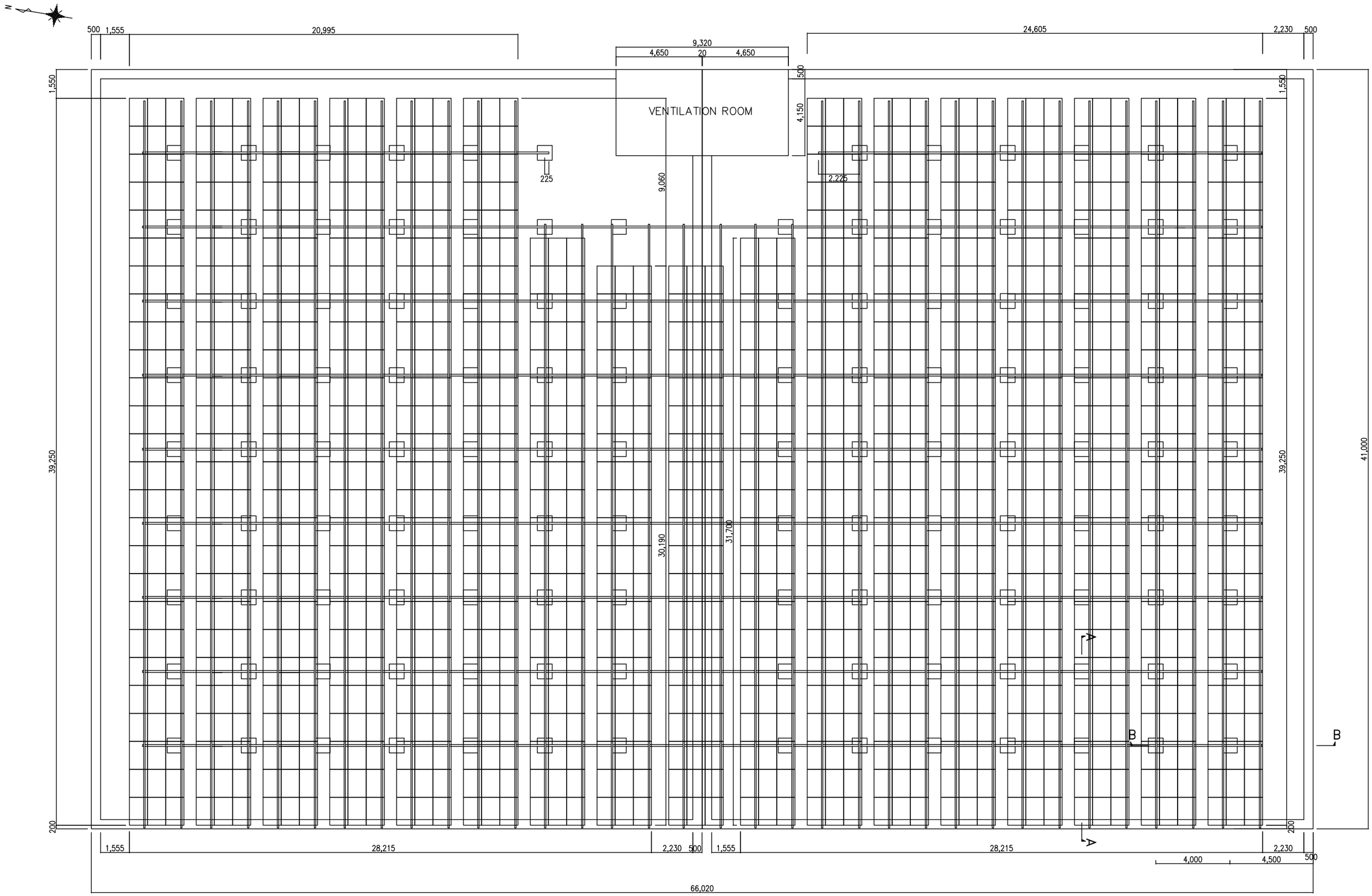

	PROJECT	COUNTRY	SHEET CONTENTS	DRAWING NO.
JAPAN INTERNATIONAL COOPERATION AGENCY	Preparatory Survey on the Project for Clean Energy Promotion Using Solar Photovoltaic System	The Kingdom of Cambodia	LAYOUT PLAN OF INSTALLATION FRAME AND SOLAR ARRAY No.2 DISTRIBUTION RESERVOIR (Scale: 1/200)	PPWSA-02-01

ROOFTOP OF No.2 DISTRIBUTION RESERVOIR

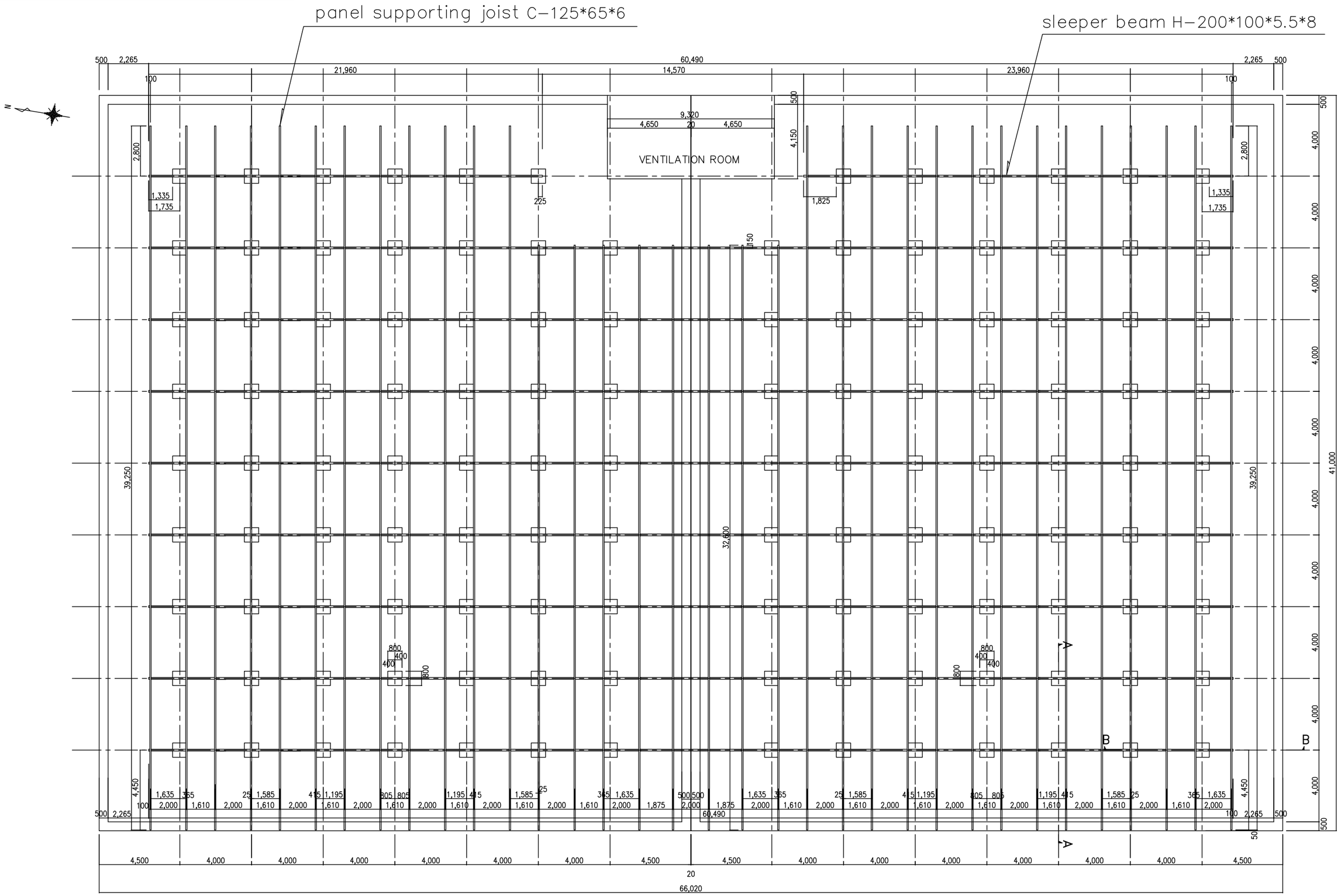

JAPAN INTERNATIONAL COOPERATION AGENCY	PROJECT	COUNTRY	SHEET CONTENTS	DRAWING NO.
	Preparatory Survey on the Project for Clean Energy Promotion Using Solar Photovoltaic System	The Kingdom of Cambodia	LAYOUT PLAN OF INSTALLATION FRAME FOR SOLAR MODULE No.2 DISTRIBUTION RESERVOIR (Scale: 1/200)	PPWSA-02-02

ROOFTOP OF No.2 DISTRIBUTION RESERVOIR

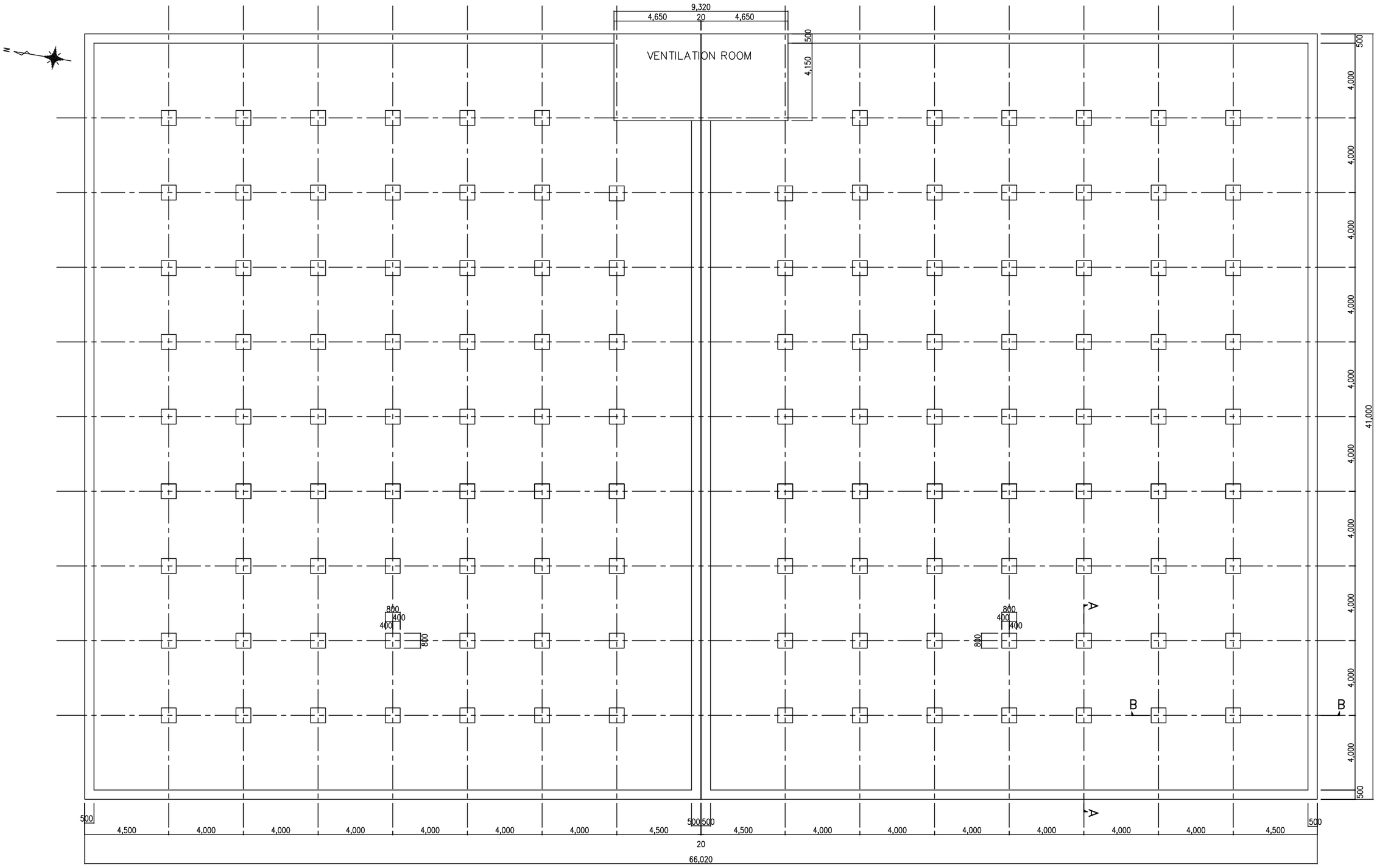

	PROJECT	COUNTRY	SHEET CONTENTS	DRAWING NO.
JAPAN INTERNATIONAL COOPERATION AGENCY	Preparatory Survey on the Project for Clean Energy Promotion Using Solar Photovoltaic System	The Kingdom of Cambodia	LAYOUT PLAN OF FOUNDATION FOR INSTALLATION FRAME No.2 DISTRIBUTION RESERVOIR (Scale: 1/200)	PPWSA-02-03

No.2 DISTRIBUTION RESEVOIR

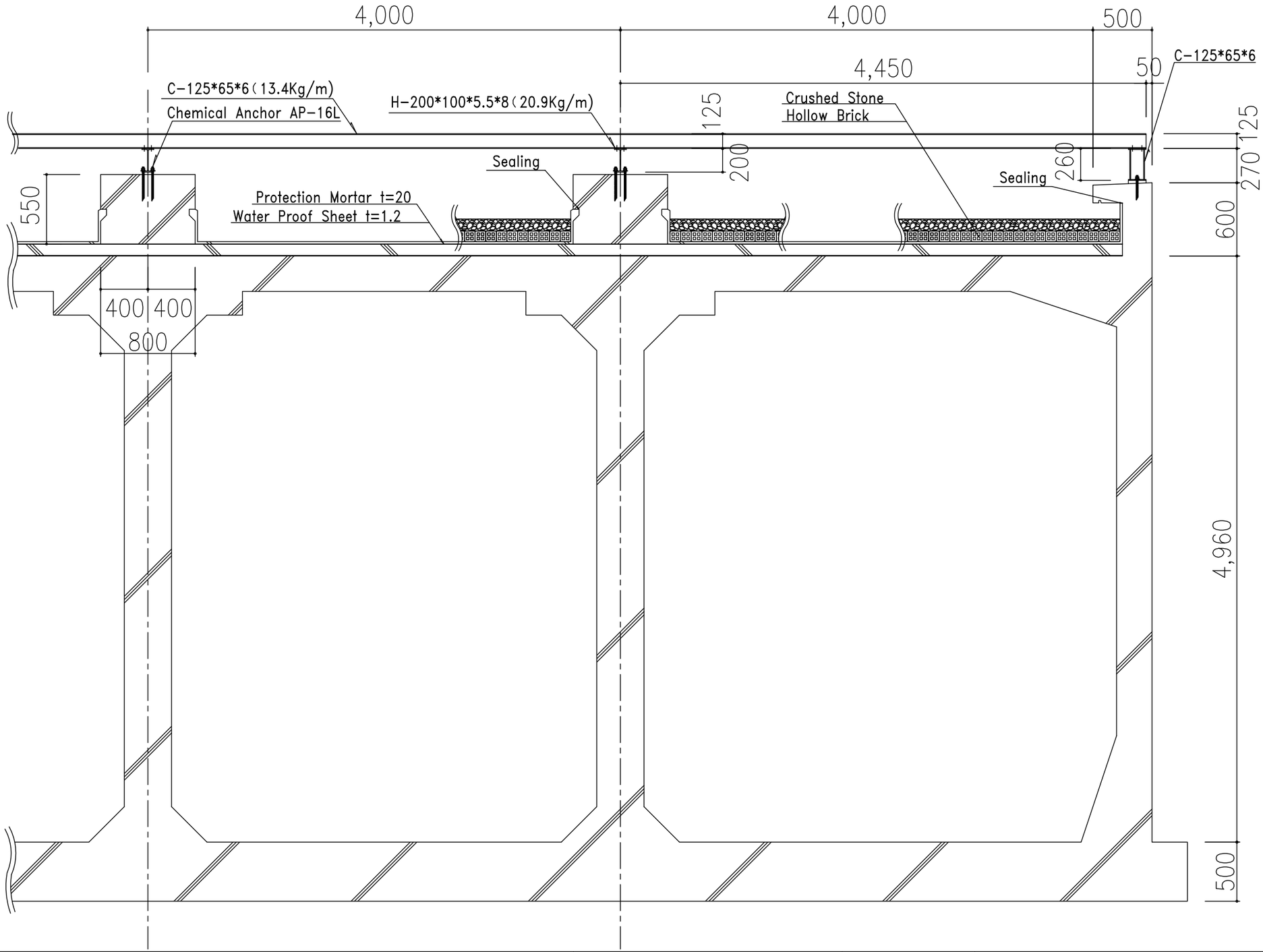

	PROJECT	COUNTRY	SHEET CONTENTS	DRAWING NO.
JAPAN INTERNATIONAL COOPERATION AGENCY	Preparatory Survey on the Project for Clean Energy Promotion Using Solar Photovoltaic System	The Kingdom of Cambodia	DETAIL OF INSTALLATION FRAME SECTIONA A-A No.2 DISTRIBUTION RESERVOIR (Scale: 1/35)	PPWSA-02-04

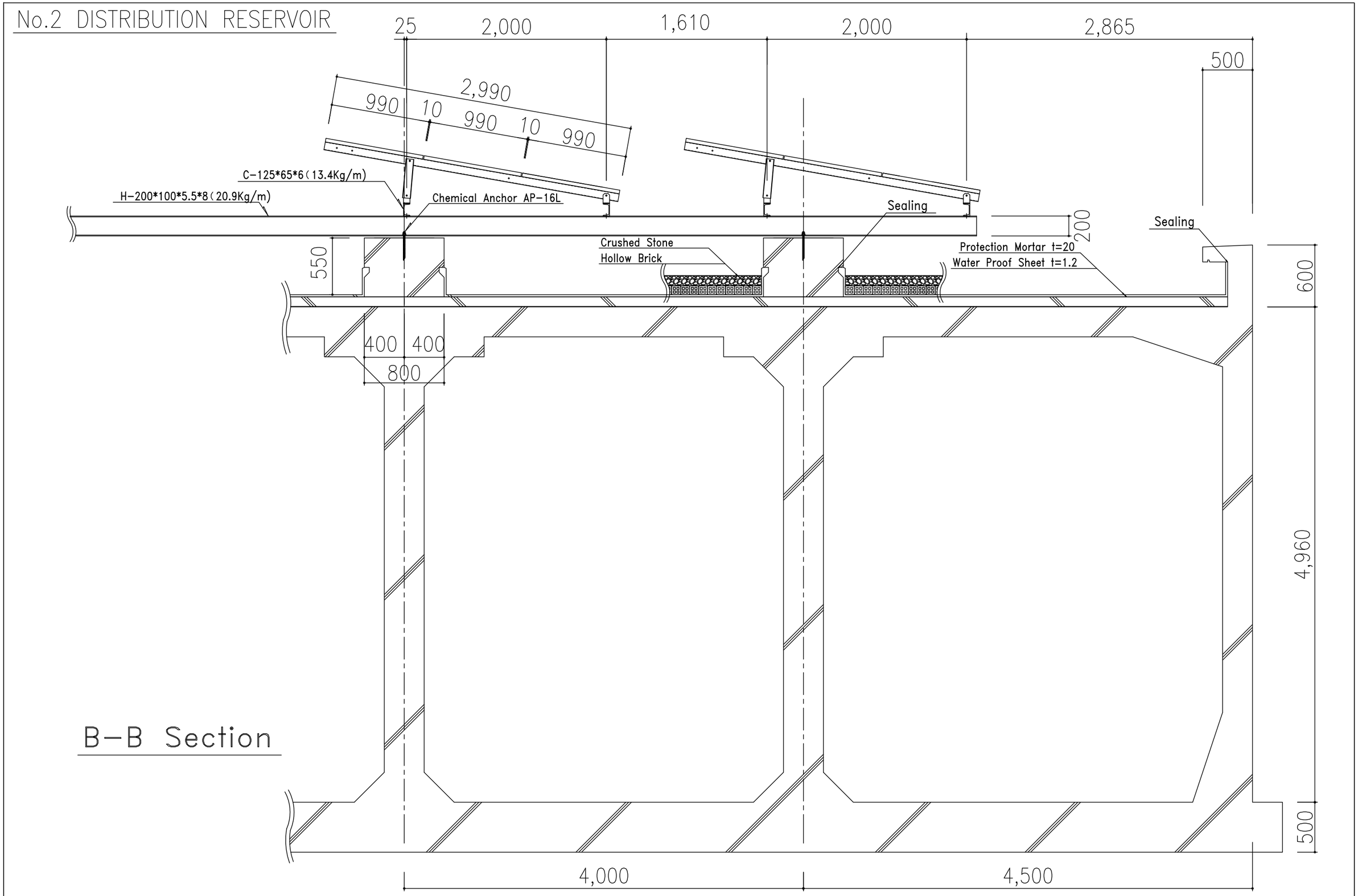

	PROJECT	COUNTRY	SHEET CONTENTS	DRAWING NO.
JAPAN INTERNATIONAL COOPERATION AGENCY	Preparatory Survey on the Project for Clean Energy Promotion Using Solar Photovoltaic System	The Kingdom of Cambodia	DETAIL OF INSTALLATION FRAME SECTION B-B No.2 DISTRIBUTION RESERVOIR (Scale: 1/35)	PPWSA-02-05

ROOFTOP OF No.3 DISTRIBUTION RESERVOIR

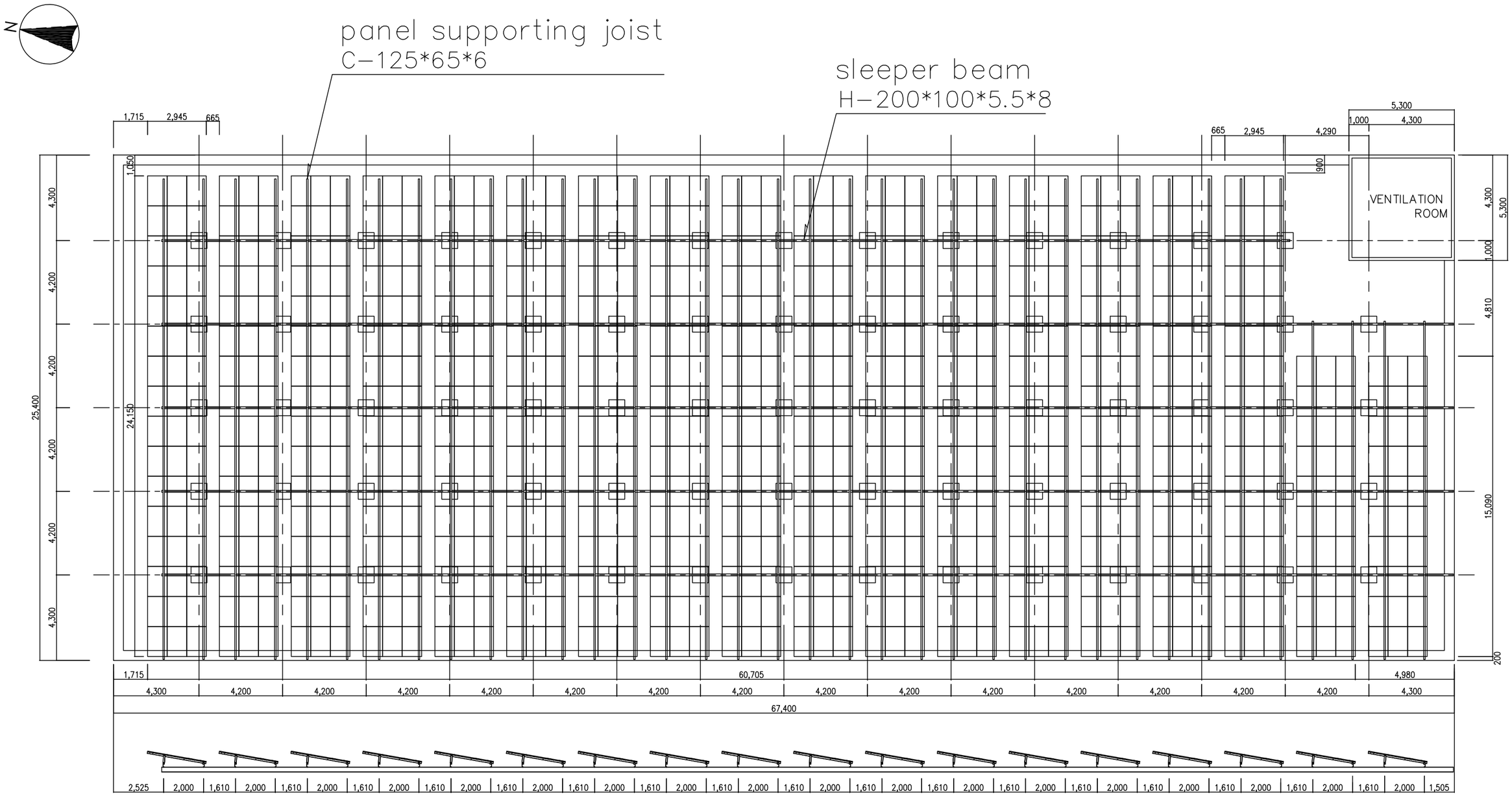

	PROJECT	COUNTRY	SHEET CONTENTS	DRAWING NO.
JAPAN INTERNATIONAL COOPERATION AGENCY	Preparatory Survey on the Project for Clean Energy Promotion Using Solar Photovoltaic System	The Kingdom of Cambodia	LAYOUT PLAN OF INSTALLATION FRAME AND SOLAR ARRAY No.3 DISTRIBUTION RESERVOIR (Scale: 1/200)	PPWSA-03-01

ROOFTOP OF No.3 DISTRIBUTION RESERVOIR

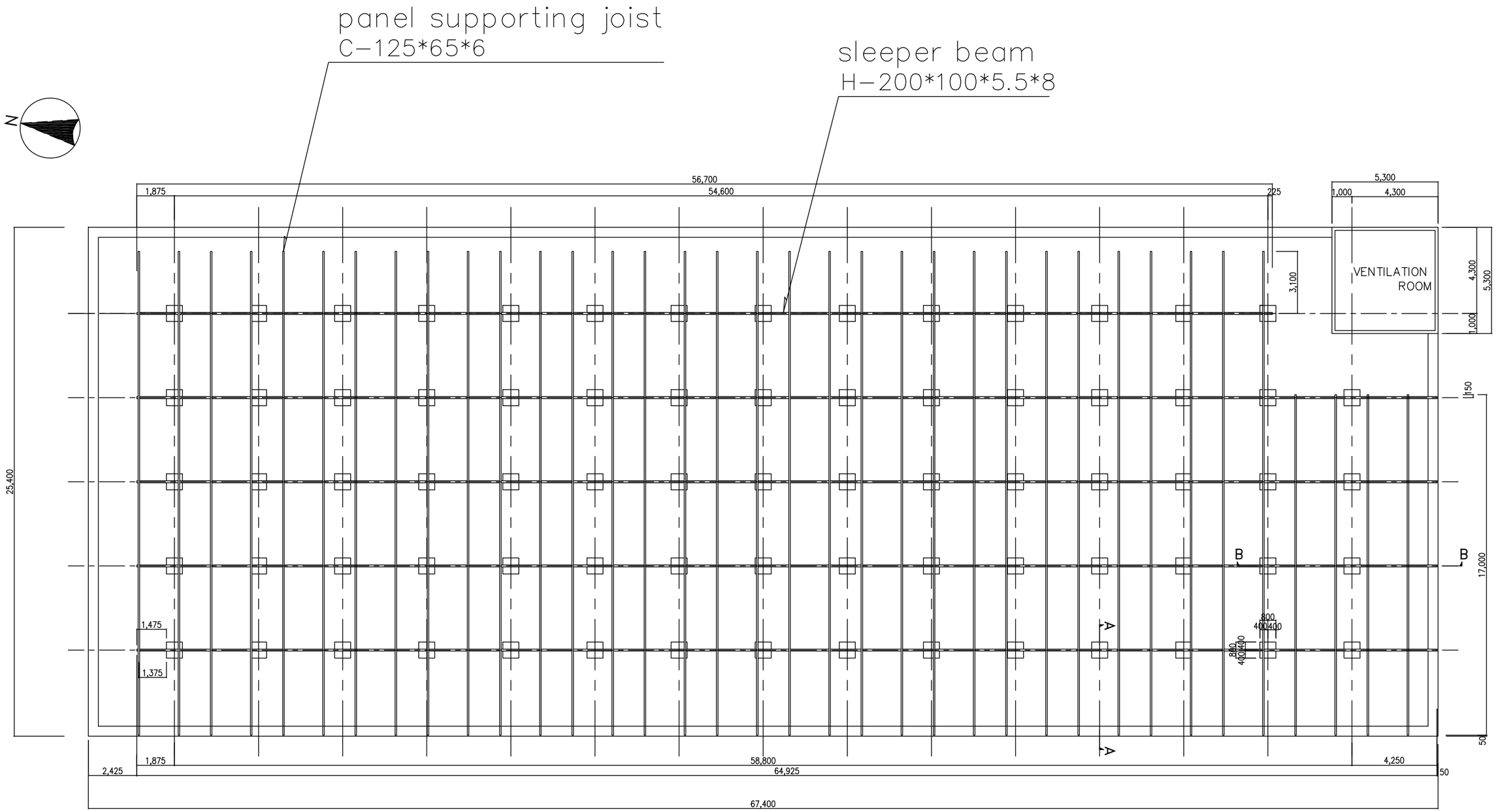

	PROJECT	COUNTRY	SHEET CONTENTS	DRAWING NO.
JAPAN INTERNATIONAL COOPERATION AGENCY	Preparatory Survey on the Project for Clean Energy Promotion Using Solar Photovoltaic System	The Kingdom of Cambodia	LAYOUT PLAN OF INSTALLATION FRAME FOR SOLAR MODULE No.3 DISTRIBUTION RESERVOIR (Scale: 1/200)	PPWSA-03-02

ROOFTOP OF No.3 DISTRIBUTION RESERVOIR

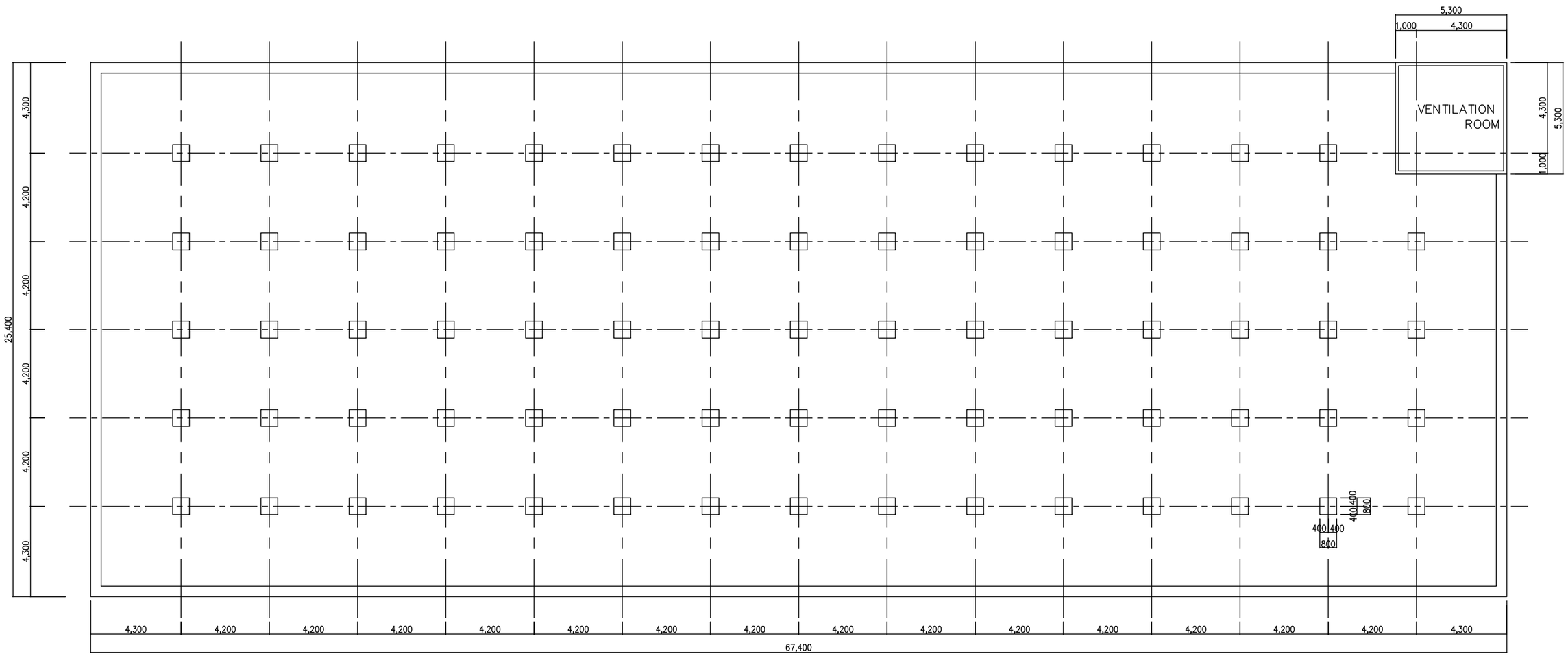

JAPAN INTERNATIONAL COOPERATION AGENCY	PROJECT	COUNTRY	SHEET CONTENTS	DRAWING NO.
	Preparatory Survey on the Project for Clean Energy Promotion Using Solar Photovoltaic System	The Kingdom of Cambodia	LAYOUT PLAN OF FOUNDATION FOR INSTALLATION FRAME No.3 DISTRIBUTION RESERVOIR (Scale: 1/200)	PPWSA-03-03

No.3 DISTRIBUTION RESERVOIR

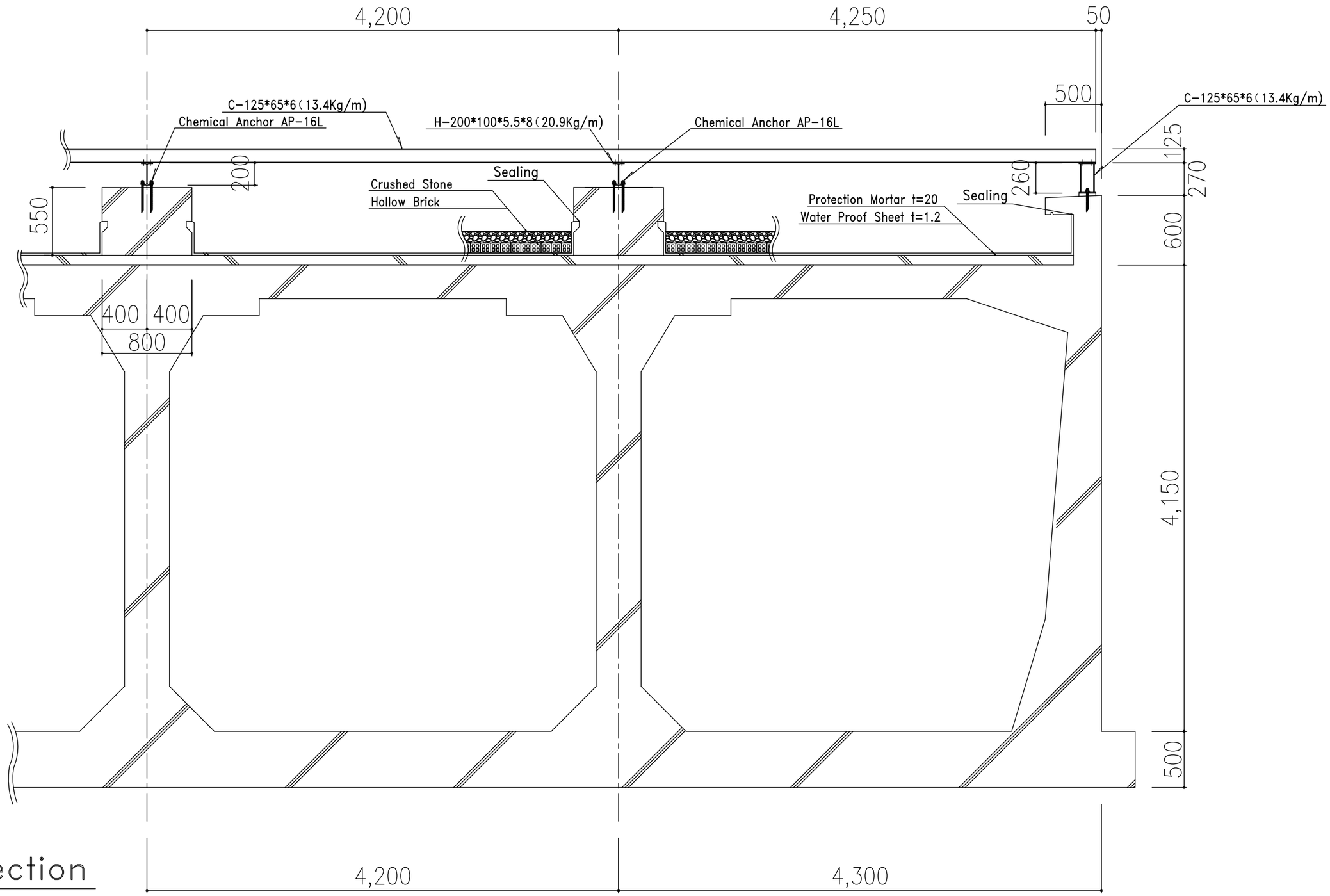

A-A Section

JAPAN INTERNATIONAL COOPERATION AGENCY	PROJECT	COUNTRY	SHEET CONTENTS	DRAWING NO.
	Preparatory Survey on the Project for Clean Energy Promotion Using Solar Photovoltaic System	The Kingdom of Cambodia	DETAIL OF INSTALLATION FRAME SECTION A-A No.3 DISTRIBUTION RESERVOIR (Scale: 1/35)	PPWSA-03-04

No.3 DISTRIBUTION RESERVOIR

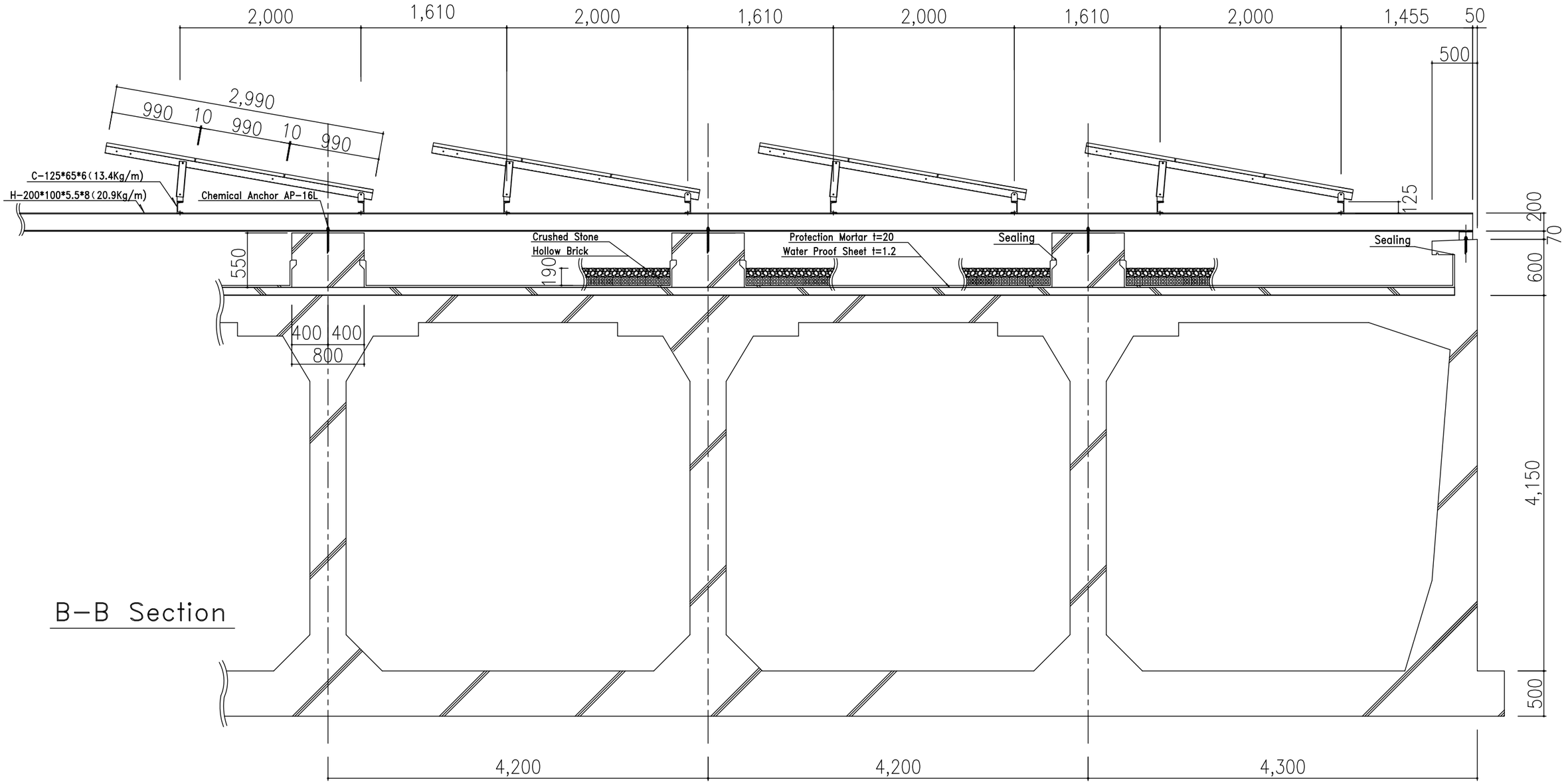

	PROJECT	COUNTRY	SHEET CONTENTS	DRAWING NO.
JAPAN INTERNATIONAL COOPERATION AGENCY	Preparatory Survey on the Project for Clean Energy Promotion Using Solar Photovoltaic System	The Kingdom of Cambodia	DETAIL OF INSTALLATION FRAME SECTION B-B No.3 DISTRIBUTION RESERVOIR (Scale: 1/45)	PPWSA-03-05

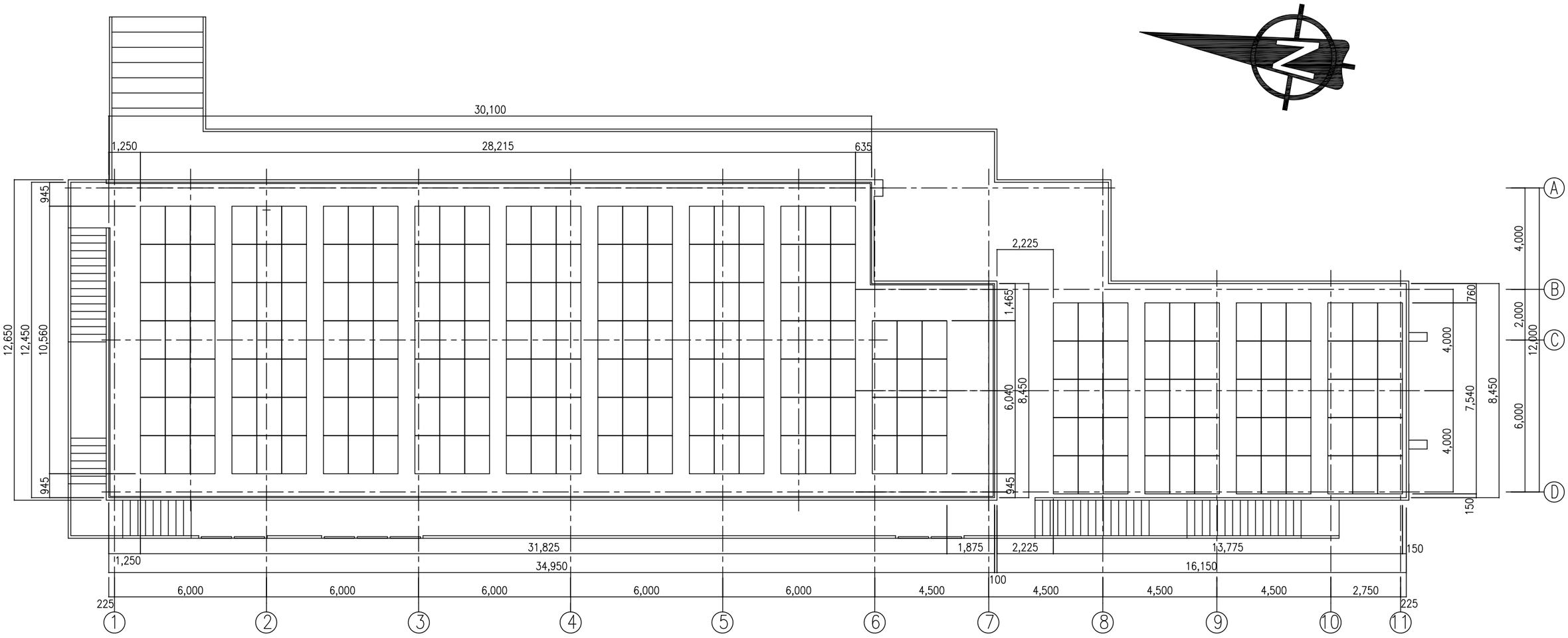

PANEL LAYOUT PLAN

0 5 10m

JAPAN INTERNATIONAL COOPERATION AGENCY	PROJECT	COUNTRY	SHEET CONTENTS	DRAWING NO.
	Preparatory Survey on the Project for Clean Energy Promotion Using Solar Photovoltaic System	The Kingdom of Cambodia	LAYOUT PLAN OF INSTALLATION FRAME AND SOLAR ARRAY CHEMICAL FEEDING BUILDING & STORAGE (Scale: As shown)	PPWSA-04-01

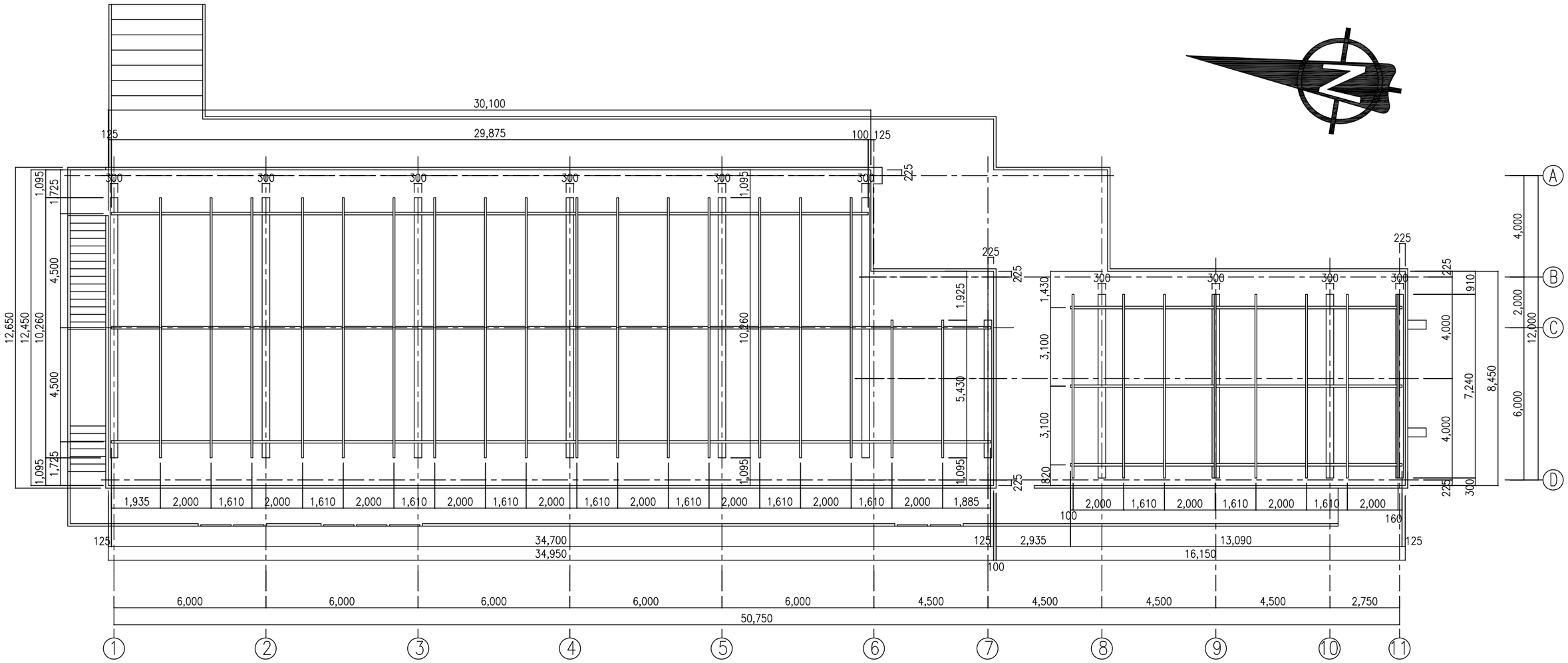

LAYOUT PLAN OF INSTALLATION FRAME

0 5 10m

JAPAN INTERNATIONAL COOPERATION AGENCY	PROJECT	COUNTRY	SHEET CONTENTS	DRAWING NO.
	Preparatory Survey on the Project for Clean Energy Promotion Using Solar Photovoltaic System	The Kingdom of Cambodia	LAYOUT PLAN OF INSTALLATION FRAME FOR SOLAR MODULE CHEMICAL FEEDING BUILDING & STORAGE (Scale: As shown)	PPWSA-04-02

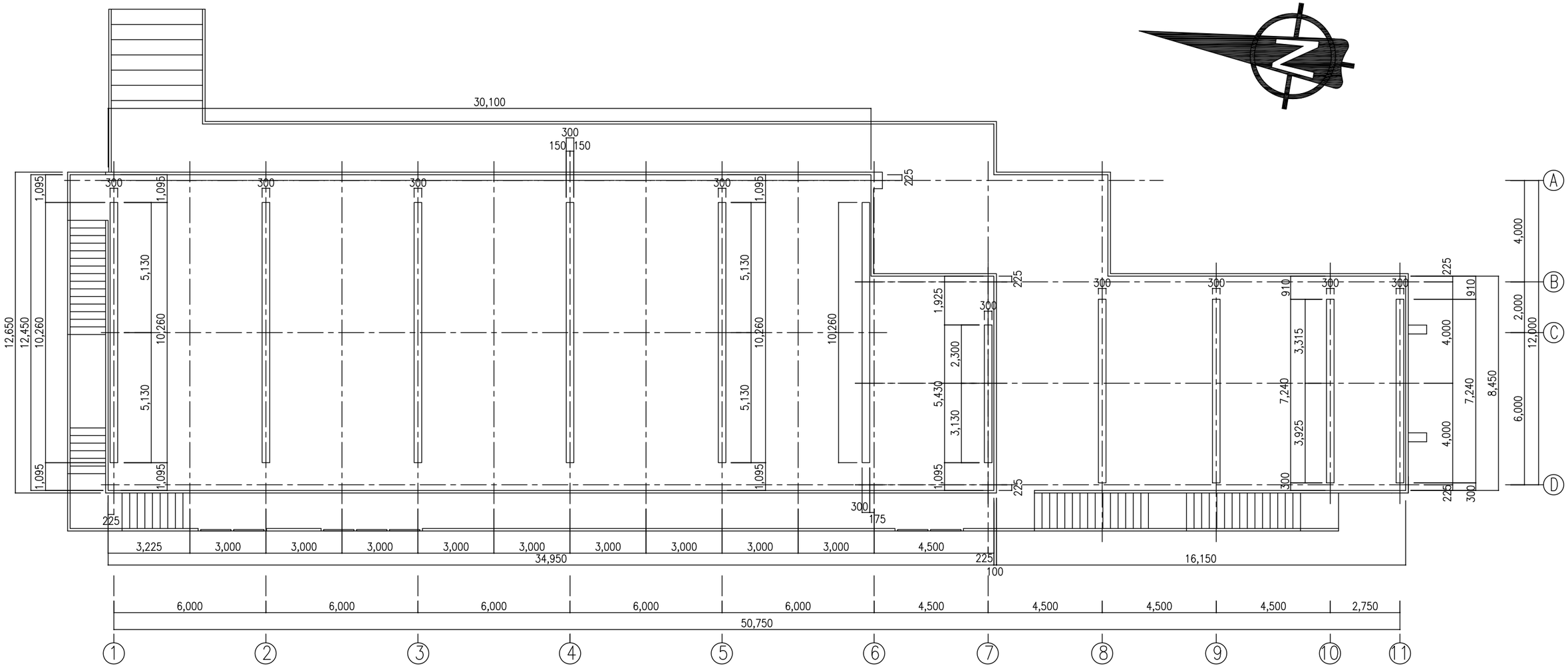

LAYOUT PLAN OF FOUNDATION FOR INSTALLATION FRAME

0 5 10m

JAPAN INTERNATIONAL COOPERATION AGENCY	PROJECT	COUNTRY	SHEET CONTENTS	DRAWING NO.
	Preparatory Survey on the Project for Clean Energy Promotion Using Solar Photovoltaic System	The Kingdom of Cambodia	LAYOUT PLAN OF FOUNDATION FOR INSTALLATION FRAME CHEMICAL FEEDING BUILDING & STORAGE (Scale: As shown)	PPWSA-04-03

WEST SIDE ELEVATION

0 5 10m

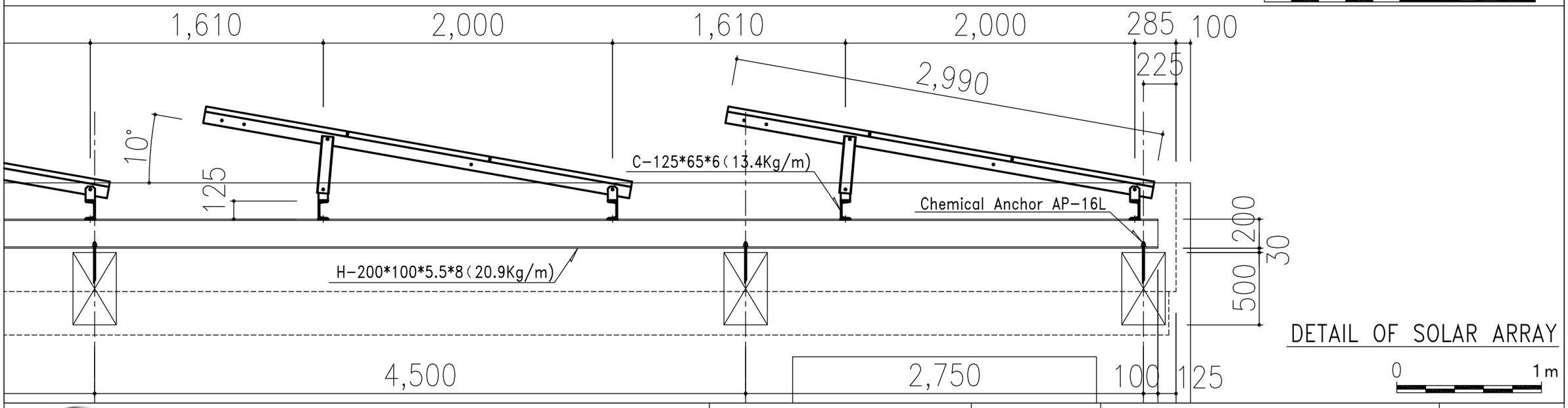

DETAIL OF SOLAR ARRAY

0 1m

JAPAN INTERNATIONAL COOPERATION AGENCY	PROJECT	COUNTRY	SHEET CONTENTS	DRAWING NO.
	Preparatory Survey on the Project for Clean Energy Promotion Using Solar Photovoltaic System	The Kingdom of Cambodia	WEST SIDE ELEVATION AND DETAIL OF SOLAR ARRAY CHEMICAL FEEDING BUILDING & STORAGE (Scale: As shown)	PPWSA-04-04

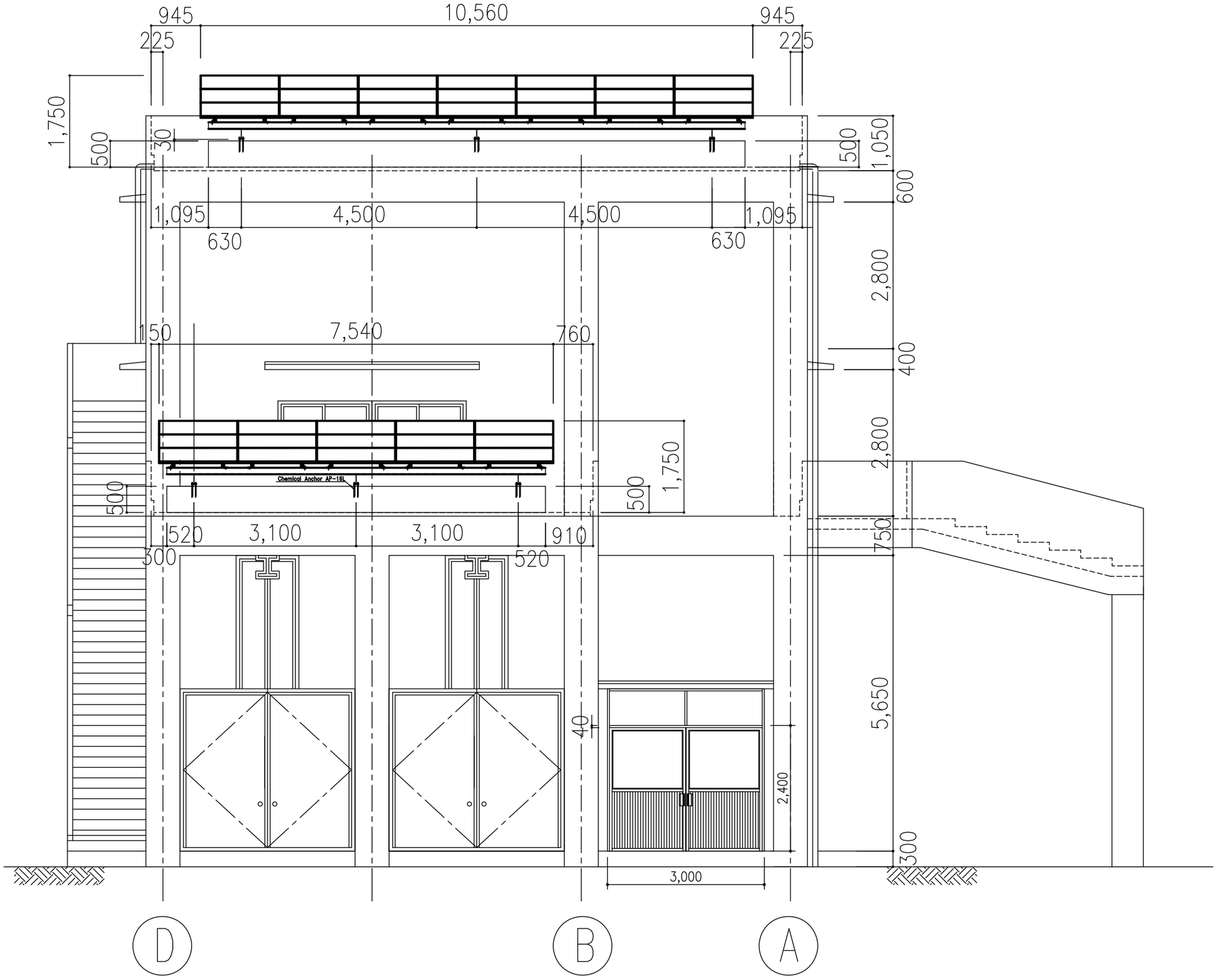

SOUTH SIDE ELEVATION

0 5m

JAPAN INTERNATIONAL COOPERATION AGENCY	PROJECT	COUNTRY	SHEET CONTENTS	DRAWING NO.
	Preparatory Survey on the Project for Clean Energy Promotion Using Solar Photovoltaic System	The Kingdom of Cambodia	SOUTH SIDE ELEVATION CHEMICAL FEEDING BUILDING & STORAGE (Scale: As shown)	PPWSA-04-05

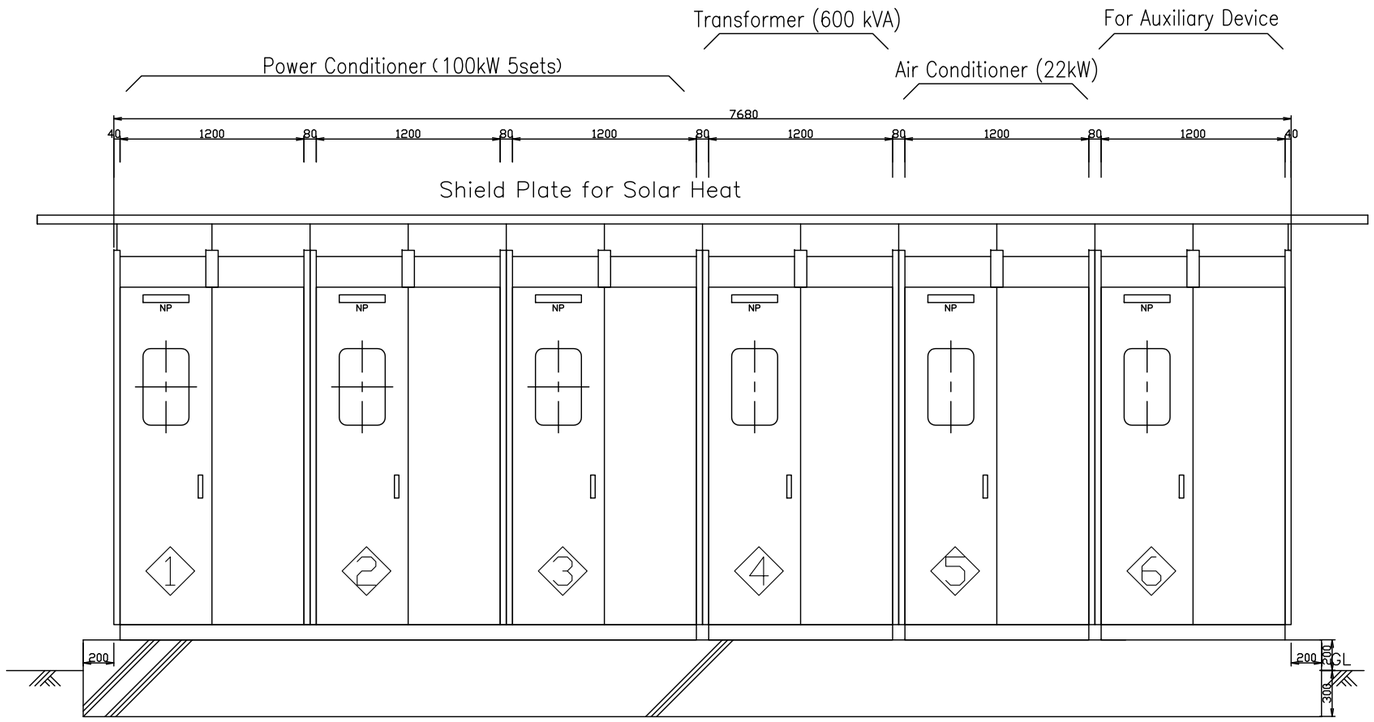

CUBICLE FRONT VIEW

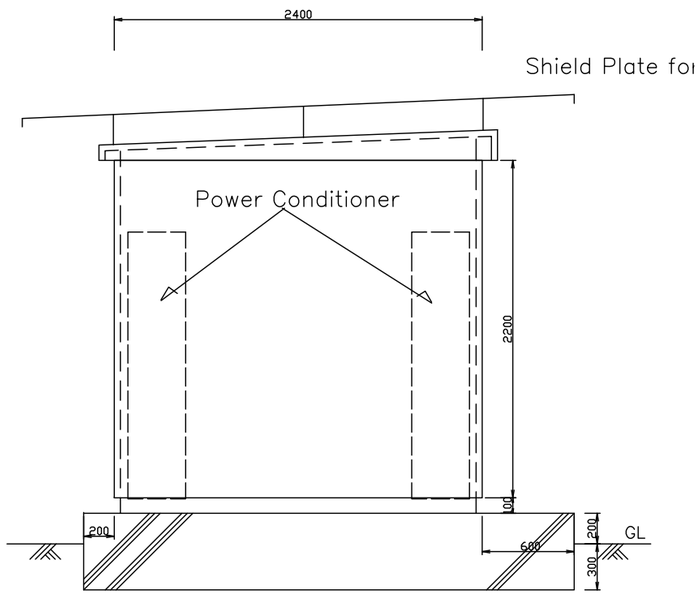

SIDE VIEW

CUBICLE VIEW

JAPAN INTERNATIONAL COOPERATION AGENCY	PROJECT	COUNTRY	SHEET CONTENTS	DRAWING NO.
	Preparatory Survey on the Project for Clean Energy Promotion Using Solar Photovoltaic System	The Kingdom of Cambodia	Detail od Power Conditioner (Scale: S=1:40)	PPWSA-05-01

No.2 DISTRIBUTION RESERVOIR Scale 1/40

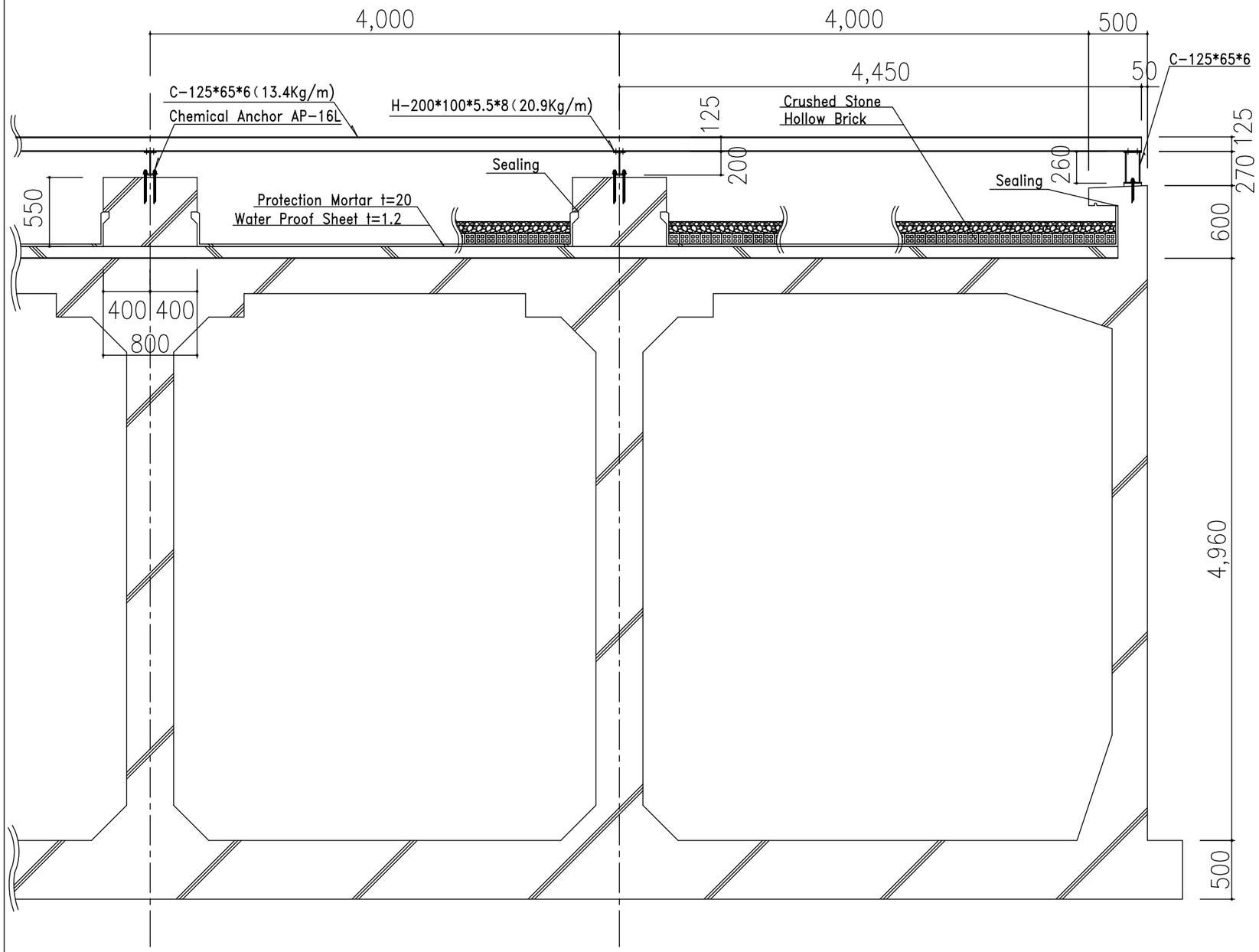

A-A Section

Detail of Water Proofing Work

Scale 1/20

(Foundation Concrete)

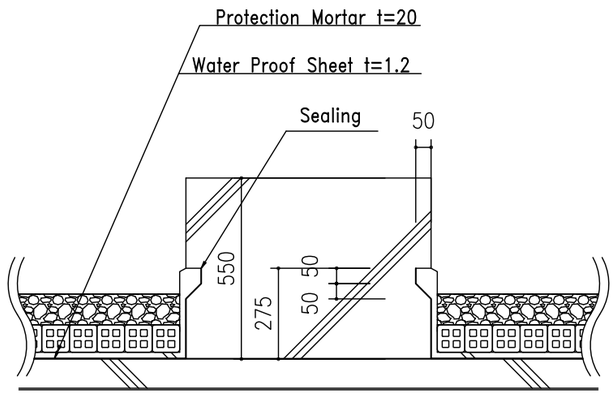

(Parapet Wall)

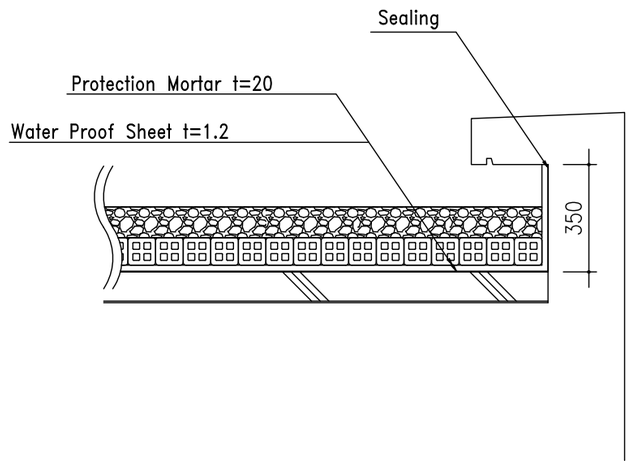

JAPAN INTERNATIONAL COOPERATION AGENCY	PROJECT	COUNTRY	SHEET CONTENTS	DRAWING NO.
	Preparatory Survey on the Project for Clean Energy Promotion Using Solar Photovoltaic System	The Kingdom of Cambodia	DETAIL OF Water Proofing Works No.2 DISTRIBUTION RESERVOIR (Scale: 1/40, 1/20)	PPWSA-05-02