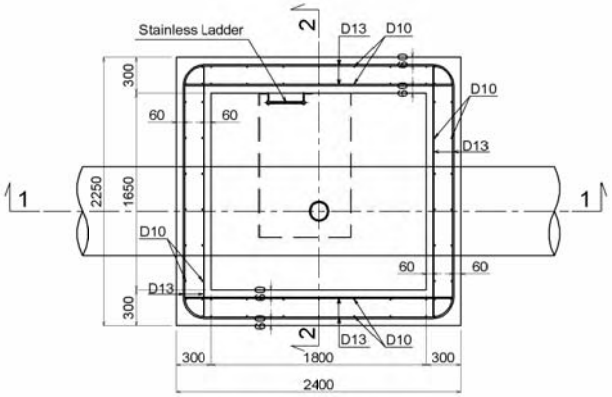

SECTION 3-3

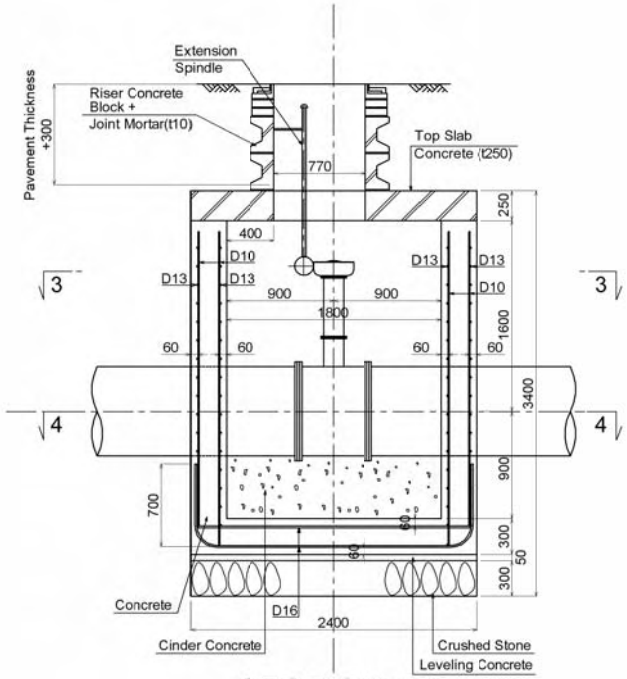

SECTION 1-1

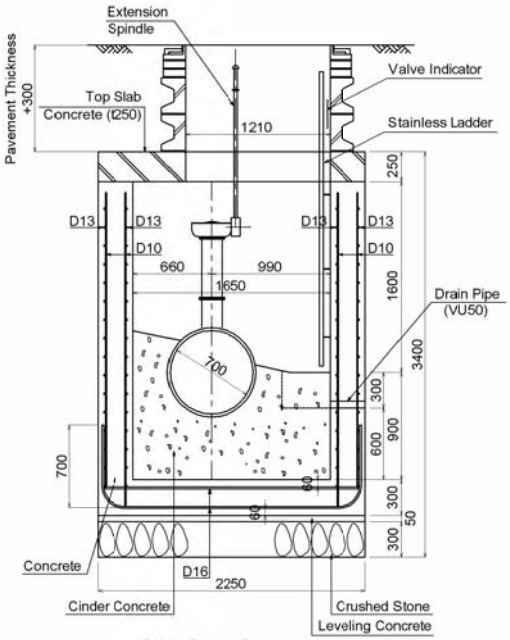

SECTION 2-2

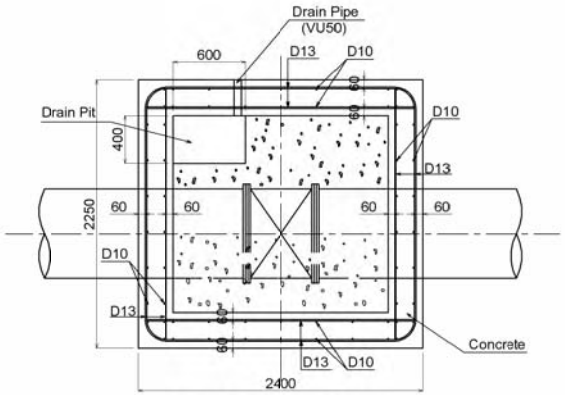

SECTION 4-4

BUTTERFLY VALVE CHAMBER FOR Ø700

REV. NO.	DATE	NATURE OF REVISION	BY	CHECKED	REVIEW	APPROVED
3						
2						
1						

WATER SUPPLY AND SEWERAGE AUTHORITY OF ULAANBAATAR CITY (USUG)CO., LTD.

PROJECT NAME:
THE PREPARATORY STUDY (BASIC DESIGN) ON THE ULAANBAATAR WATER SUPPLY DEVELOPMENT PROJE IN GACHUURT IN MONGOLIA

DRAWING TITLE:
(CIVIL WORKS)
BUTTERFLY VALVE CHAMBER
FOR ϕ 700

DWG. NO. DR- C006 SHEET OF

DESIGNED BY:
CONSULTANT / CIVIL ENGINEER
APPROVED BY:
CHECKED & SUBMITTED BY:
HEAD / HEAD OF TECHNICAL DEPARTMENT
CONSULTANT / PROJECT MANAGER

CTI ENGINEERING INTERNATIONAL CO., LTD.
TOKYO, JAPAN

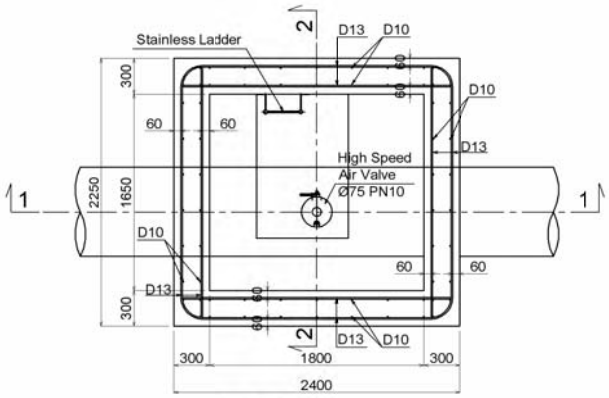

SECTION 3-3

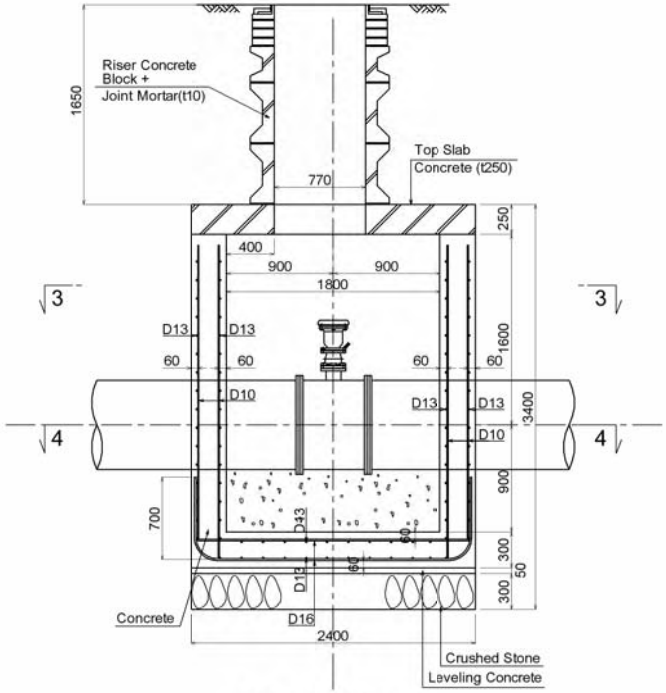

SECTION 1-1

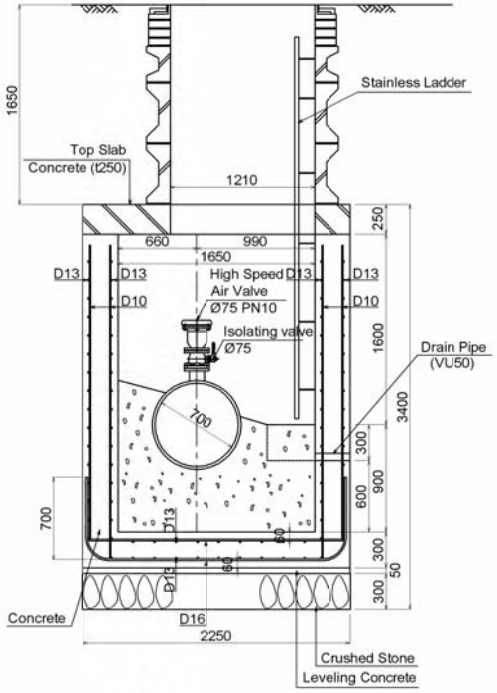

SECTION 2-2

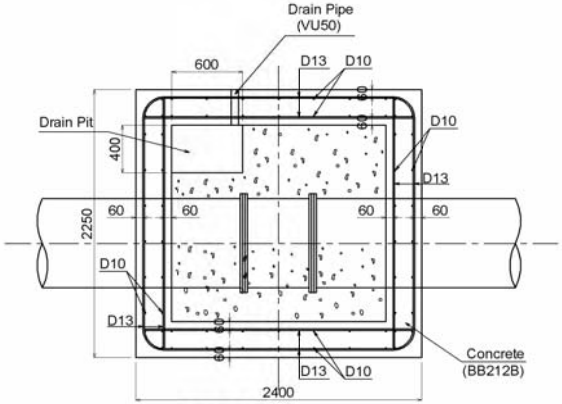

SECTION 4-4

AIR VALVE CHAMBER FOR Ø700

REV. NO.	DATE	NATURE OF REVISION	BY	CHECKED	REC'M	APPROV. DATE
1						
2						
3						

WATER SUPPLY AND SEWERAGE AUTHORITY
OF ULAANBAATAR CITY (USUG) CO., LTD.

PROJECT NAME:
THE PREPARATORY STUDY (BASIC DESIGN) ON
THE ULAANBAATAR WATER SUPPLY DEVELOPMENT PROJE
IN BACHURT IN MONGOLIA

DRAWING TITLE:
(CIVIL WORKS)
AIR VALVE CHAMBER
FOR ϕ 700

DWG. NO. DR- C-607 SHEET OF

DESIGNED BY:
CONSULTANT / CIVIL ENGINEER
APPROVED BY:
CHECKED & SUBMITTED BY:
USUG / HEAD OF TECHNICAL DEPARTMENT
CONSULTANT / PROJECT MANAGER

CTI ENGINEERING INTERNATIONAL CO., LTD.
TOKYO, JAPAN

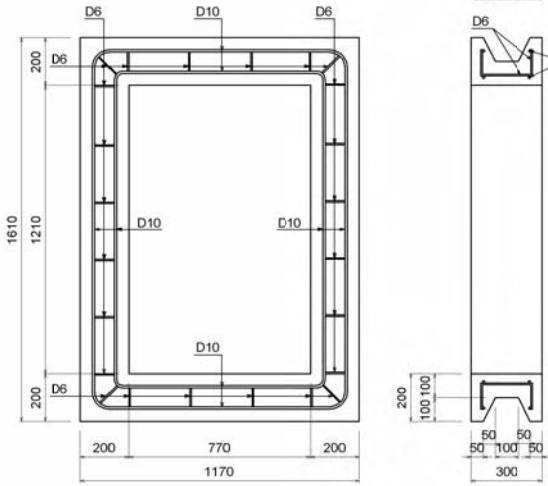

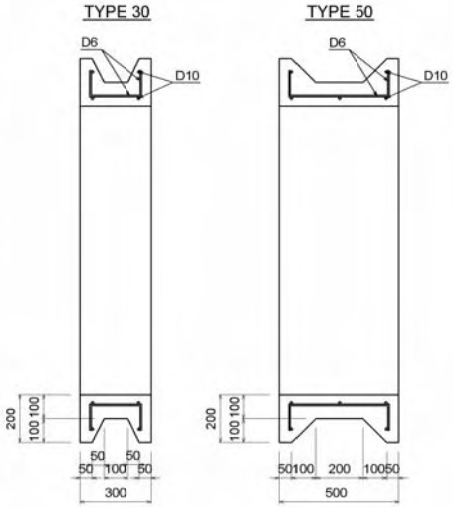

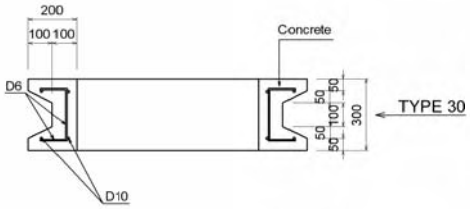

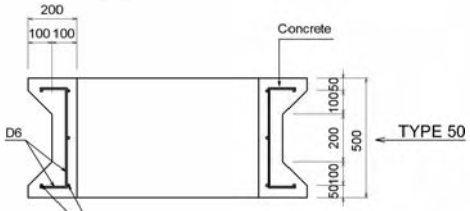

RISER CONCRETE (1210×770)

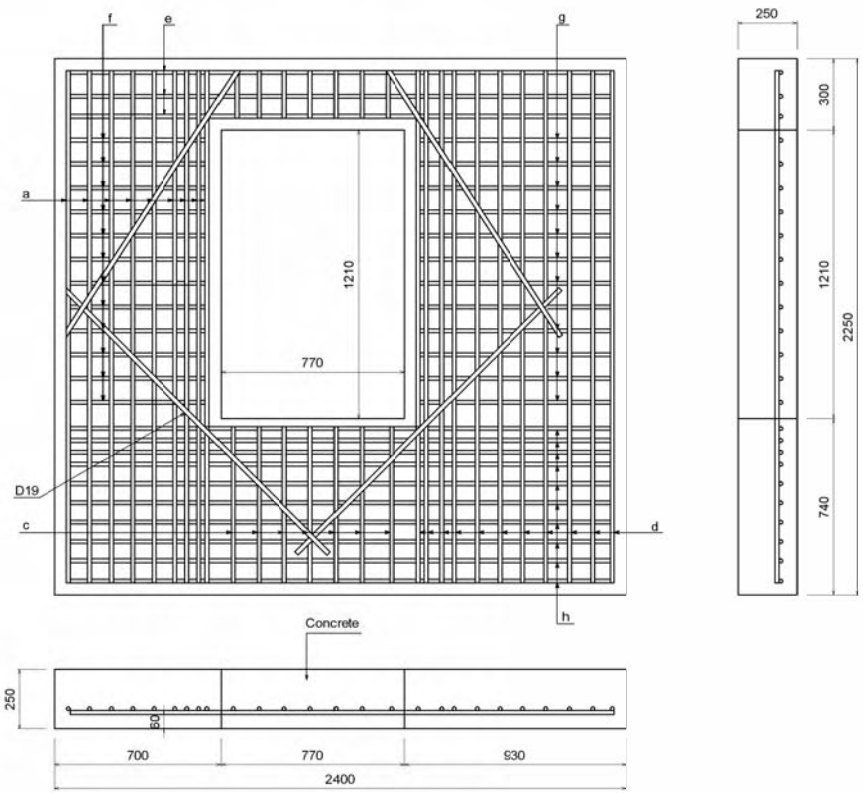

TOP SLAB

Reinforcing Bar Table

Symbol / D	Reinforcing Bar Diameter	a n×l(m)	b n×l(m)	c n×l(m)	d n×l(m)	e n×l(m)	f n×l(m)	g n×l(m)	h n×l(m)
700	D16	9×2.15	7×0.20	7×0.65	11×2.15	3×2.30	12×0.60	12×0.85	10×2.30

NO.	DATE	NATURE OF REVISION	BY	CHECKED	REVIEW	APPROVED
3						
2						
1						

WATER SUPPLY AND SEWERAGE AUTHORITY OF ULAANBAATAR CITY (USUG) CO., LTD.

PROJECT NAME:
THE PREPARATORY STUDY (BASIC DESIGN) ON THE ULAANBAATAR WATER SUPPLY DEVELOPMENT PROJE IN GACHUURT IN MONGOLIA

DRAWING TITLE:
(CIVIL WORKS)
REINFORCEMENT DRAWING
OF VALVE CHAMBER

DWG. NO. DR- C-008 SHEET OF

DESIGNED BY
CONSULTANT / CIVIL ENGINEER
APPROVED BY
CHECKED & SUBMITTED BY
HEAD / HEAD OF TECHNICAL DEPARTMENT
CONSULTANT / PROJECT MANAGER

CTI ENGINEERING INTERNATIONAL CO., LTD.
TOKYO, JAPAN

REINFORCEMENT DRAWING OF VALVE CHAMBER

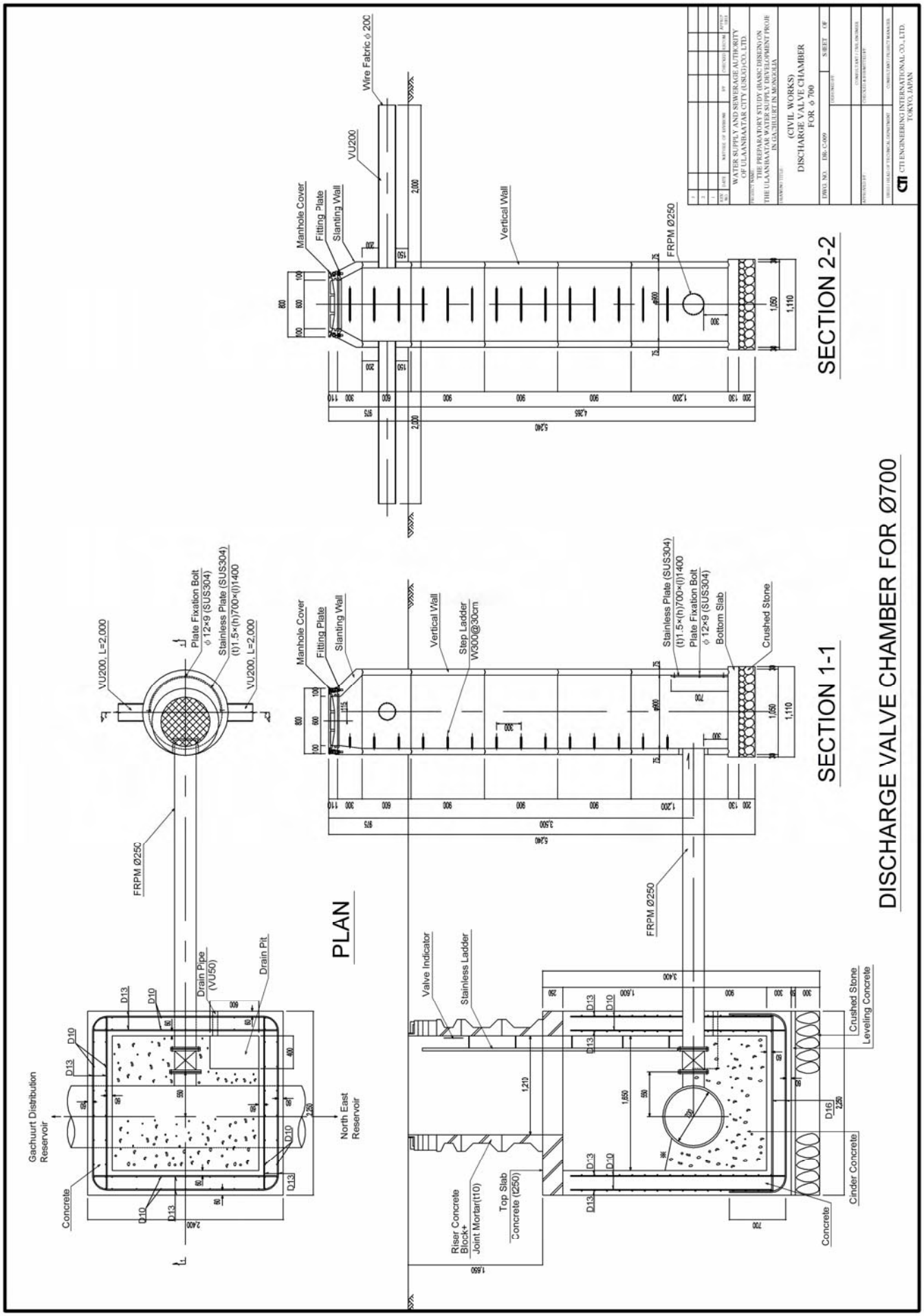
DISCHARGE VALVE CHAMBER FOR Ø700
SECTION 2-2
SECTION 1-1
PLAN
Wire Fabric ϕ 20C
VU200
Manhole Cover
Fitting Plate
Slanting Wall
Vertical Wall
FRPM Ø250
Step Ladder
W300@30cm
Stainless Plate (SUS304)
(t)1.5×(h)700×(l)1400
Plate Fixation Bolt
ϕ 12×9 (SUS304)
Bottom Slab
Crushed Stone
VU200, L=2,000
Drain Pipe
(VU50)
Drain Pit
Gachuurt Distribution Reservoir
North East Reservoir
Concrete
Valve Indicator
Stainless Ladder
Riser Concrete Block+ Joint Mortar(110)
Top Slab Concrete (1250)
Leveling Concrete
Cinder Concrete
WATER SUPPLY AND SEWERAGE AUTHORITY OF ULAANBAATAR CITY (USGO) CO., LTD.
THE PREPARATORY STUDY (BASIC DESIGN) ON THE ULAANBAATAR WATER SUPPLY DEVELOPMENT PROJECT IN ULAANBAATAR MONGOLIA
(CIVIL WORKS)
DISCHARGE VALVE CHAMBER FOR ϕ 700
DWG. NO. DR-C-009
SHEET OF
CTI ENGINEERING INTERNATIONAL CO., LTD.
TOKYO, JAPAN

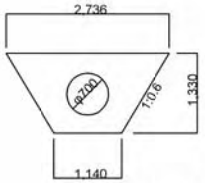

SECTION: Gravel

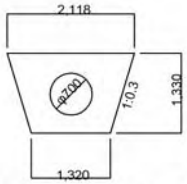

SECTION: Soft Rock

90° Bend Pipes
Steel Special Fittings

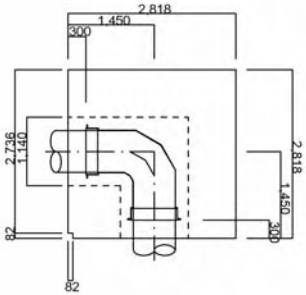

22 1/2° Bend Pipes
Steel Special Fittings

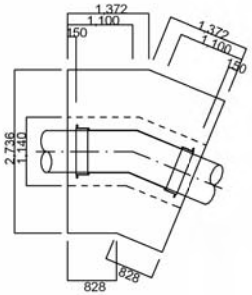

90° Bend Pipes
Steel Special Fittings

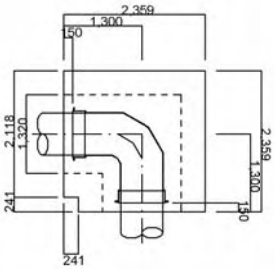

45° Bend Pipes
Steel Special Fittings

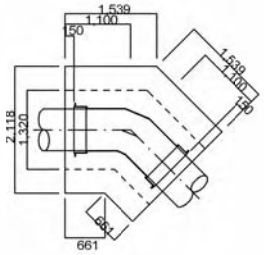

22 1/2° Bend Pipes
Steel Special Fittings

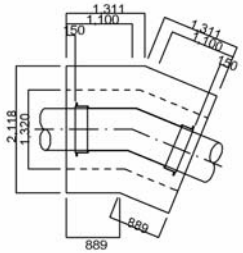

45° Bend Pipes
Steel Special Fittings

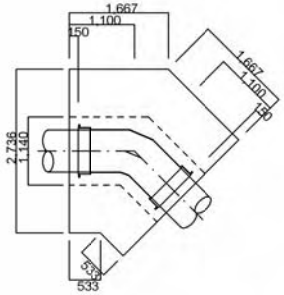

90° Bend Pipes
FRPM Special Fittings

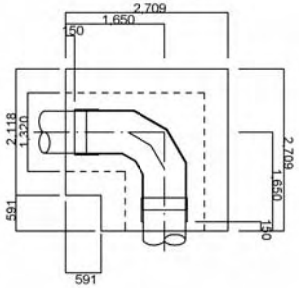

45° Bend Pipes
FRPM Special Fittings

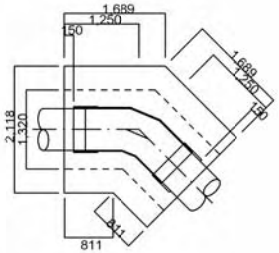

PLAN: Gravel

PLAN: Soft Rock

THRUST BLOCKS FOR TRANSMISSION MAIN

REV. NO.	DATE	NATURE OF REVISION	BY	CHECKED	RECOM.	APPROV. DEG.
3						
2						
1						

WATER SUPPLY AND SEWERAGE AUTHORITY
OF ULAANBAATAR CITY (USUG) CO., LTD.

PROJECT NAME:
THE PREPARATORY STUDY (BASIC DESIGN) ON
THE ULAANBAATAR WATER SUPPLY DEVELOPMENT PROJE
IN GACHUURT IN MONGOLIA

DRAWING TITLE:
(CIVIL WORKS)
THRUST BLOCKS FOR
TRANSMISSION MAIN

DWG. NO. DR-C-010 SHEET OF

DESIGNED BY:
CONSULTANT / CIVIL ENGINEER
APPROVED BY:
CHECKED & SUBMITTED BY:
HEAD / HEAD OF TECHNICAL DEPARTMENT
CONSULTANT / PROJECT MANAGER

CTI ENGINEERING INTERNATIONAL CO., LTD.
TOKYO, JAPAN

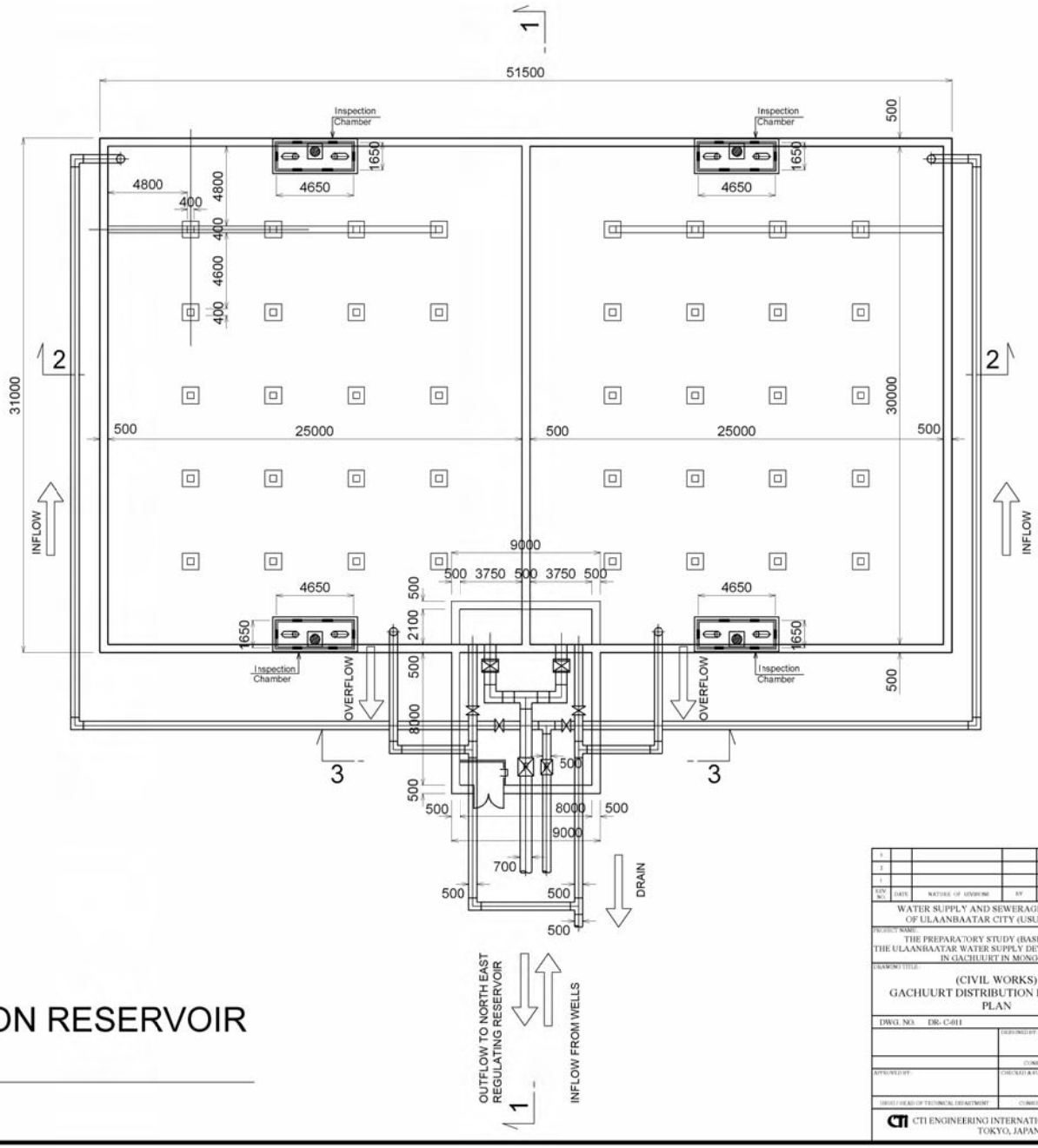

PLAN OF
GACHUURT DISTRIBUTION RESERVOIR
V=3,000x2=6,000m3

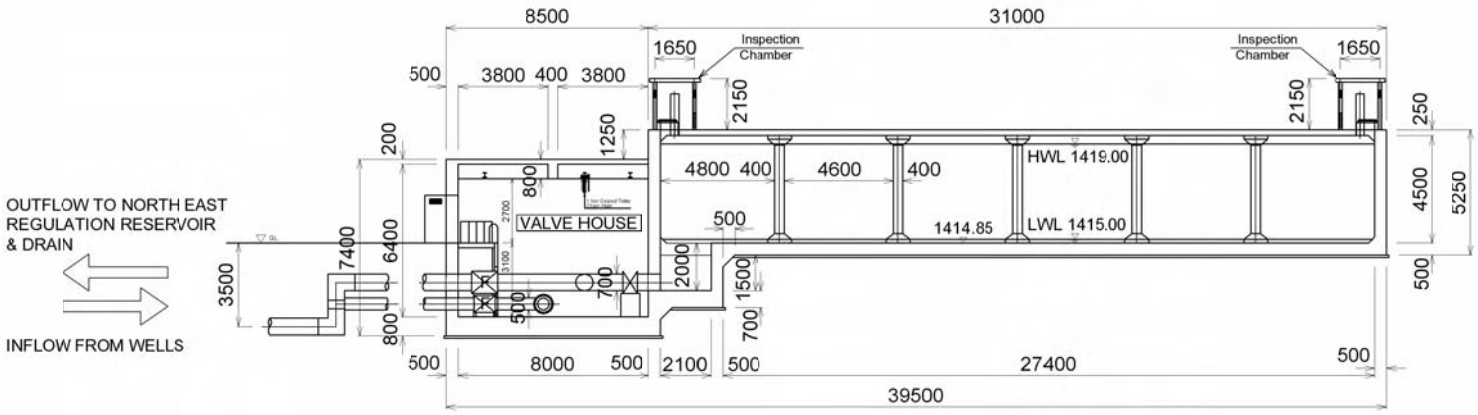

SECTION 1-1

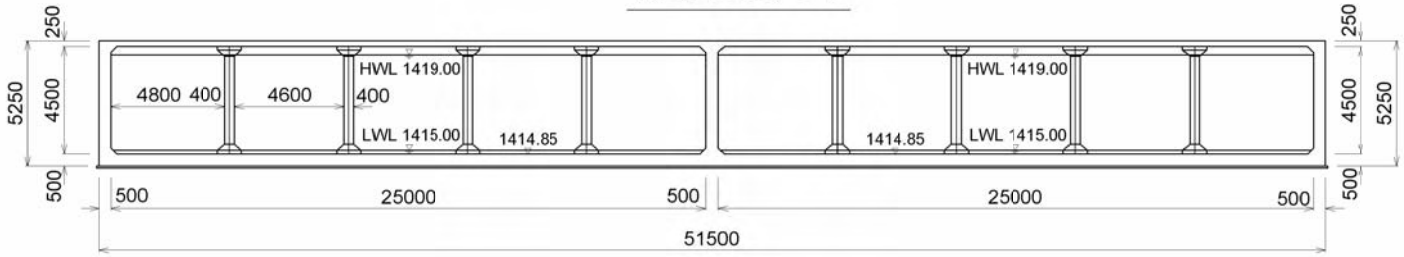

SECTION 2-2

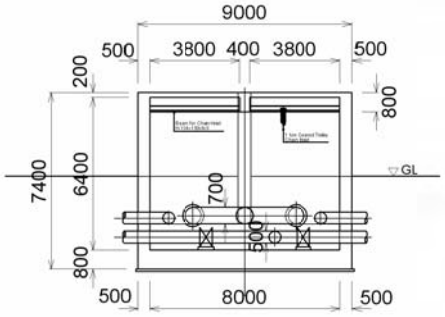

SECTION 3-3

SECTIONS OF GACHUURT DISTRIBUTION RESERVOIR

REV. NO.	DATE	NATURE OF REVISION	BY	CHECKED	REVIEW	APPROVED
1						
2						
3						

WATER SUPPLY AND SEWERAGE AUTHORITY OF ULAANBAATAR CITY (USUG) CO., LTD.

PROJECT NAME: THE PREPARATORY STUDY (BASIC DESEIN) ON THE ULAANBAATAR WATER SUPPLY DEVELOPMENT PROJE IN GACHUURT IN MONGOLIA

DRAWING TITLE: (CIVIL WORKS) GACHUURT DISTRIBUTION RESERVOIR SECTIONS

DWG. NO. DR- C-012 SHEET OF

DESIGNED BY: CONSULTANT / CIVIL ENGINEER

APPROVED BY: CHECKED & SUBMITTED BY: DEPUTY / HEAD OF TECHNICAL DEPARTMENT CONSULTANT / PROJECT MANAGER

CTI ENGINEERING INTERNATIONAL CO., LTD. TOKYO, JAPAN

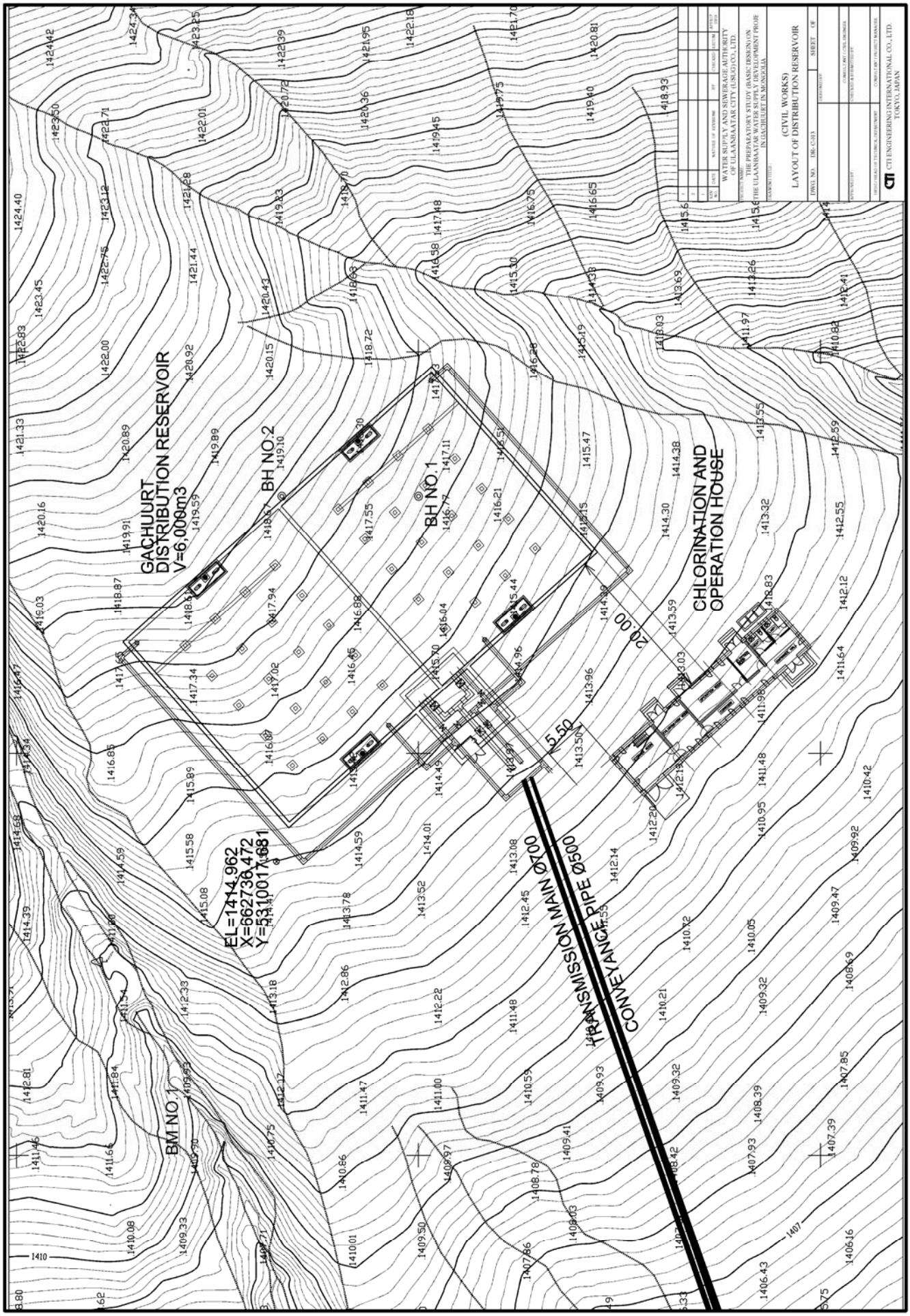
GACHUURT
DISTRIBUTION RESERVOIR
V=6,000m3
BH NO.2
BH NO.1
CHLORINATION AND
OPERATION HOUSE
EL=1414.962
X=662736.472
Y=5310017.681
BM NO.1
TRANSMISSION MAIN Ø700
CONVEYANCE PIPE Ø500
20.00
5.50
WATER SUPPLY AND SEWERAGE AUTHORITY
OF ULAANBAATAR CITY (USUG) CO., LTD.
THE PREPARATION STUDY (BASIC DESIGN) ON
THE ULAANBAATAR WATER SUPPLY DEVELOPMENT PROJE
IN GACHUURT IN MONGOLIA
(CIVIL WORKS)
LAYOUT OF DISTRIBUTION RESERVOIR
DWG. NO. DR-C-013
SHEET OF
CTI ENGINEERING INTERNATIONAL CO., LTD.
TOKYO, JAPAN

NORTH EAST
DISTRIBUTION
RESERVOIR
V=3,000m3 x 2=6,000m3
STA.188+40.05 (EP)
Ø500
FRPM Ø700
STA.188
IP90
STA.187+89.66 (IP.90)
TRANSMISSION MAIN Ø700
IP89
IA=22-30-00
STA.187+39.05 (IP.89)
WATER SUPPLY AND SEWERAGE AUTHORITY
OF ULAANBAATAR CITY (USUG) CO., LTD.
THE PREPARATORY STUDY (BASIC DESIGN) ON
THE ULAANBAATAR WATER SUPPLY DEVELOPMENT PROJE
IN GACHUURT IN MONGOLIA
(CIVIL WORKS)
TRANSMISSION MAIN
PIPE CONNECTION TO
NORTH EAST RESERVOIR
DWG. NO. DR- C-014
SHEET OF
CTI ENGINEERING INTERNATIONAL CO., LTD.
TOKYO, JAPAN

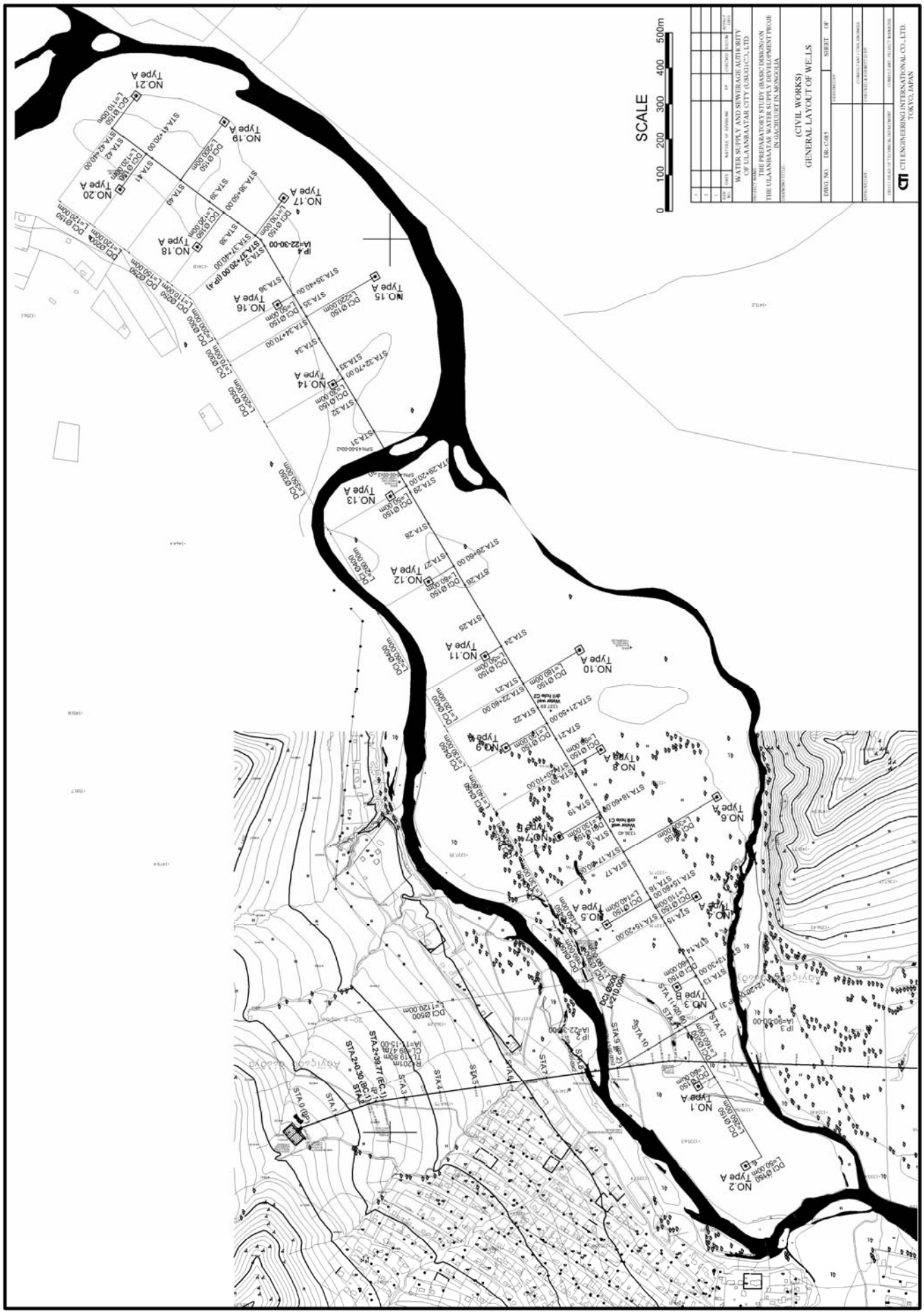
SCALE
0 100 200 300 400 500m
WATER SUPPLY AND SEWERAGE AUTHORITY OF ULAANBAATAR CITY (USUG) CO., LTD.
THE PREPARATORY STUDY (BASIC DISIGN) ON THE ULAANBAATAR WATER SUPPLY DEVELOPMENT PROJE IN JAGHUUT IN MONGOLIA
(CIVIL WORKS)
GENERAL LAYOUT OF WELLS
DWG. NO. DR- C-04.5
SHEET OF
CTI ENGINEERING INTERNATIONAL CO., LTD.
TOKYO, JAPAN

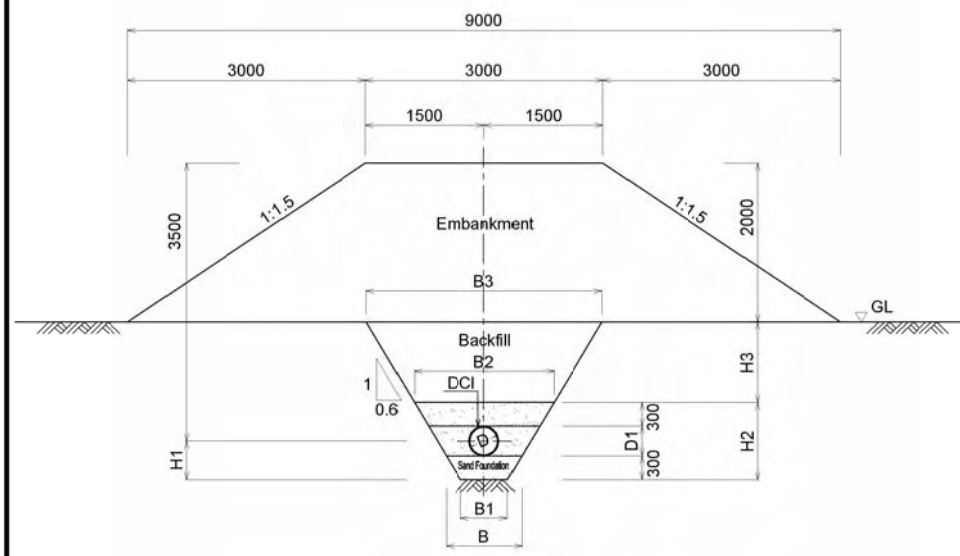

TYPICAL CROSS SECTION
OF CONVEYANCE PIPE

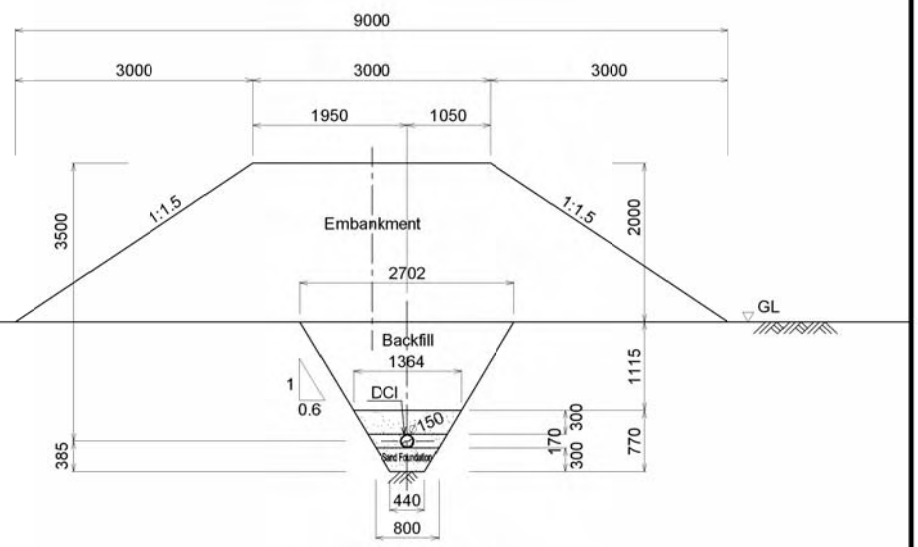

TYPICAL CROSS SECTION
OF COLLECTION PIPES

Unit: mm

D [1]	D1 [2]	B	B1	B2	B3	H1	H2	H3
150	170	800	440	1364	2702	385	770	1115
200	220	800	440	1324	2732	410	820	1090
250	270	850	490	1534	2812	435	870	1065
300	325	900	540	1650	2895	463	925	1038
350	375	950	590	1760	2975	488	975	1013
400	425	1000	640	1870	3085	513	1025	988
450	475	1050	690	1980	3135	538	1075	963
500	530	1300	940	2296	3418	565	1130	935

Notes [1] Nominal inside diameter
[2] Rounded outside diameter of ISO 2531 K-9 or JIS G5526 D3

REV NO.	DATE	NATURE OF REVISION	BY	CHECKED	REVIEW	APPROVED DESIGN
3						
2						
1						

WATER SUPPLY AND SEWERAGE AUTHORITY
OF ULAANBAATAR CITY (USUG)-CO., LTD.

PROJECT NAME:
THE PREPARATORY STUDY (BASIC DESIGN) ON
THE ULAANBAATAR WATER SUPPLY DEVELOPMENT PROJE
IN GACHUURT IN MONGOLIA

DRAWING TITLE:
(CIVIL WORKS)
TYPICAL CROSS SECTION FOR
CONVEYANCE PIPE AND
COLLECTION PIPES

DWG. NO. DR- C-016 SHEET OF

DESIGNED BY
CONSULTANT / CIVIL ENGINEER
APPROVED BY
CHECKED & REVIEWED BY
DIRECTOR / HEAD OF TECHNICAL DEPARTMENT
CONSULTANT / PROJECT MANAGER

CTI ENGINEERING INTERNATIONAL CO., LTD.
TOKYO, JAPAN

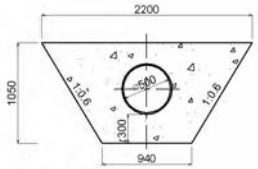

SECTION 1-1 to 4-4

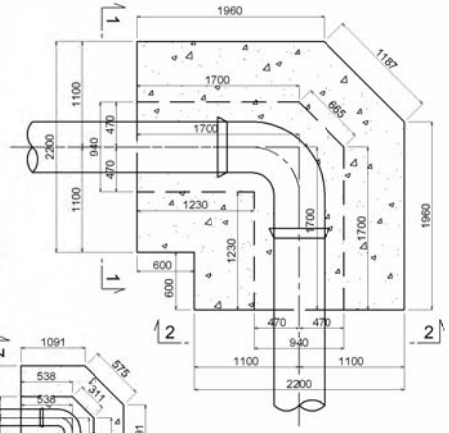

PLAN

Ø500 90° BEND

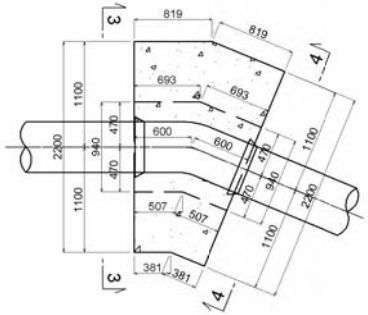

PLAN

Ø500 22-1/2° BEND

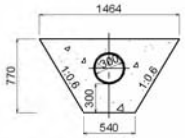

SECTION 5-5 to 6-6

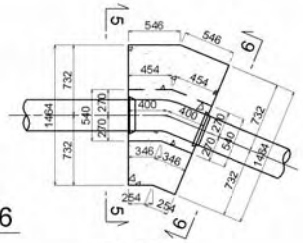

PLAN

Ø300 22-1/2° BEND

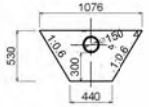

SECTION 7-7 to 8-8

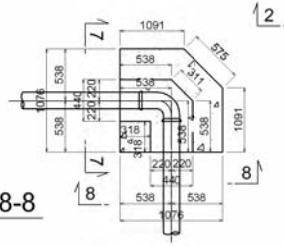

Ø150 90° BEND

PLAN

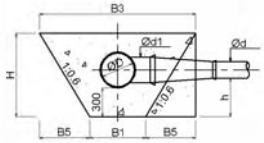

SECTION 9-9

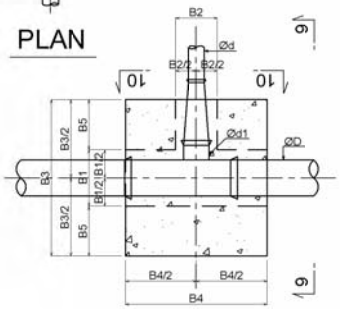

TEES

PLAN

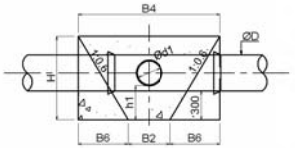

SECTION 10-10

DIMENSION TABLE FOR TEES

Unit: mm

D [1]	d [2]	d1 [3]	B1	B2	B3	B4	B5	B6	H	h	h1
200	150	150	440	440	1136	1136	348	348	580	325	325
250	150	150	490	440	1306	1256	408	408	680	350	350
300	150	150	540	440	1464	1364	462	462	770	378	378
350	150	250	590	440	1634	1484	522	522	870	403	353
400	150	300	640	440	1780	1580	570	570	950	428	350
450	150	300	690	440	1890	1640	600	600	1000	453	375
500	150	300	940	440	2200	1700	630	630	1050	480	403
500	200	300	940	440	2200	1700	630	630	1050	455	403

Notes [1] Nominal inside diameter of main [3] Nominal inside diameter of branch
[2] Nominal inside diameter of collection pipes

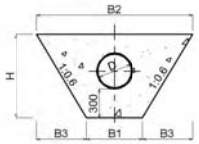

SECTION 11-11

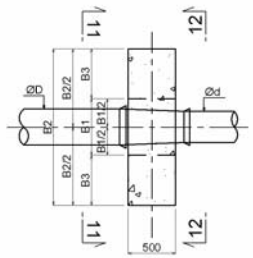

TAPERS

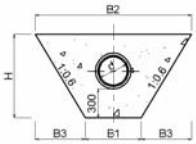

SECTION 12-12

DIMENSION TABLE FOR TAPERS

Unit: mm

D [1]	d [2]	B1	B2	B3	H
200	150	440	1136	348	580
250	200	490	1306	408	680
300	250	540	1464	462	770
350	300	590	1634	522	870
400	350	640	1780	570	950
450	400	690	1890	600	1000
500	450	940	2200	630	1050

Notes [1] Nominal inside diameter of thicker side
[2] Nominal inside diameter of thinner side

THRUST BLOCKS

REV. NO.	DATE	NATURE OF REVISION	BY	CHECKED	REVIEW	APPROVED
3						
2						
1						

WATER SUPPLY AND SEWERAGE AUTHORITY OF ULAANBAATAR CITY (USUG) CO., LTD.

PROJECT NAME: THE PREPARATORY STUDY (BASIC DESIGN) ON THE ULAANBAATAR WATER SUPPLY DEVELOPMENT PROJECT IN GACHUURT IN MONGOLIA

DRAWING TITLE: (CIVIL WORKS) THRUST BLOCKS FOR CONVEYANCE PIPE AND COLLECTION PIPES

DWG. NO. DR- C-017 SHEET OF

DESIGNED BY: CONSULTANT / CIVIL ENGINEER

APPROVED BY: DIVISION HEAD OF TECHNICAL DEPARTMENT

CHECKED & SUBMITTED BY: CONSULTANT / PROJECT MANAGER

CTI ENGINEERING INTERNATIONAL CO., LTD. TOKYO, JAPAN

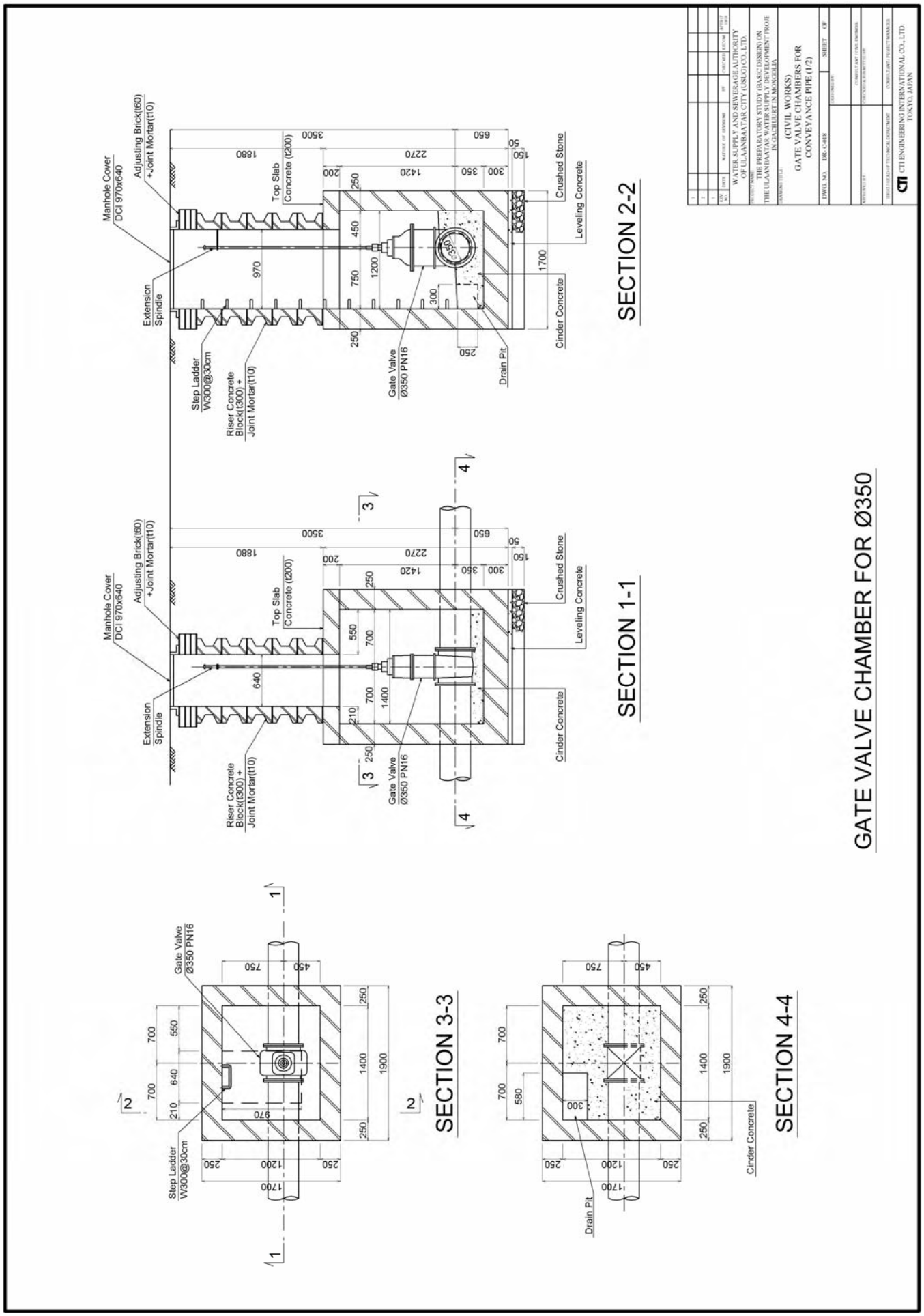
SECTION 2-2
SECTION 1-1
SECTION 3-3
SECTION 4-4
GATE VALVE CHAMBER FOR Ø350
Manhole Cover DCI 970x640
Adjusting Brick(t60) +Joint Mortar(t10)
Top Slab Concrete (t200)
Crushed Stone
Leveling Concrete
Cinder Concrete
Extension Spindle
Step Ladder W300@30cm
Riser Concrete Block(t300) + Joint Mortar(t10)
Gate Valve Ø350 PN16
Drain Pit
WATER SUPPLY AND SEWERAGE AUTHORITY OF ULAANBAATAR CITY (USAGI CO., LTD.
THE PREPARATORY STUDY (BASIC DESIGN) ON THE ULAANBAATAR WATER SUPPLY DEVELOPMENT PROJE IN GACHUURT IN MONGOLIA
(CIVIL WORKS)
GATE VALVE CHAMBERS FOR CONVEYANCE PIPE (1/2)
DWG. NO. DR-C-018
SHEET OF
CTI ENGINEERING INTERNATIONAL CO., LTD.
TOKYO, JAPAN

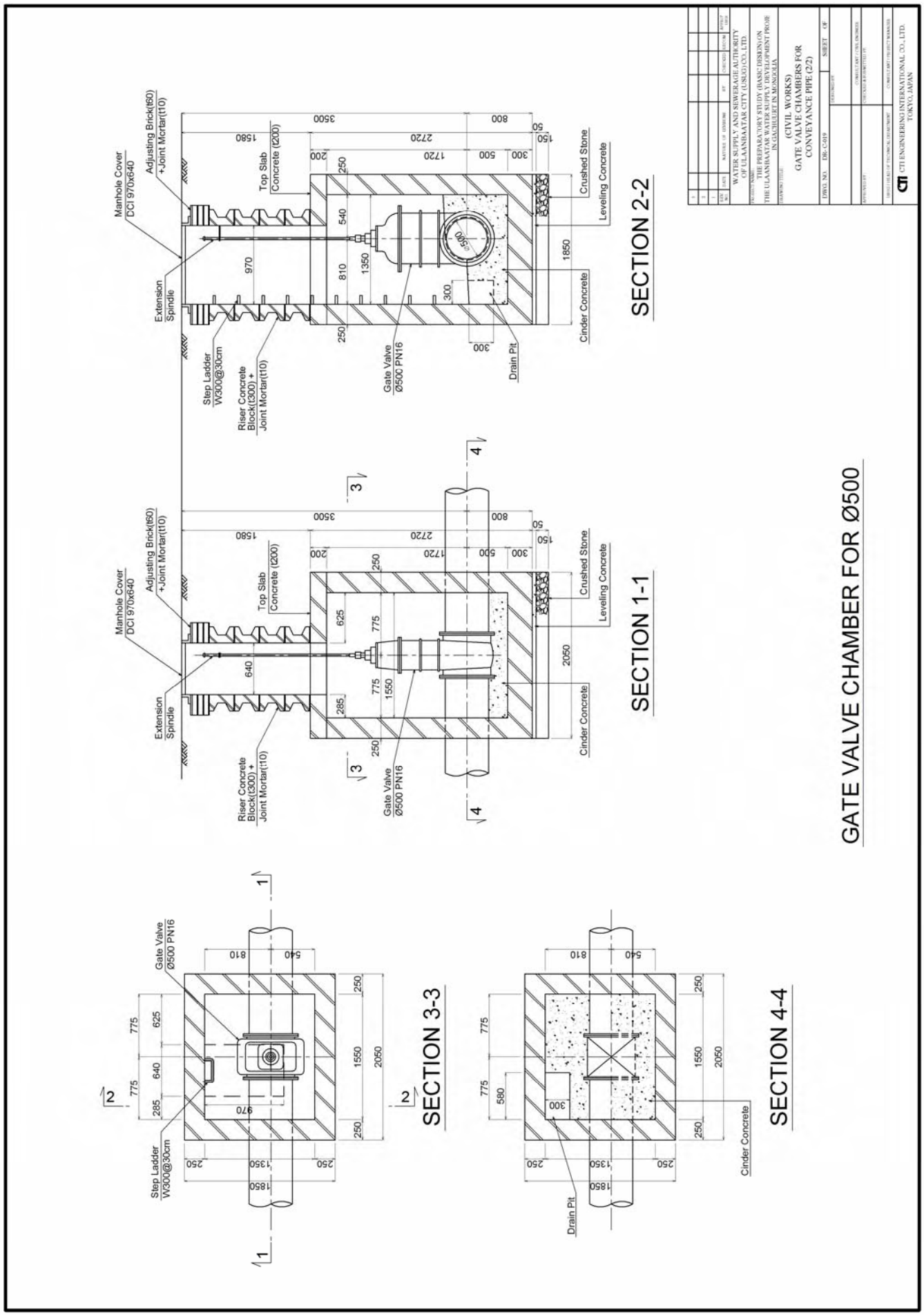
SECTION 2-2
SECTION 1-1
SECTION 3-3
SECTION 4-4
GATE VALVE CHAMBER FOR Ø500
Manhole Cover DCI 970x640
Adjusting Brick(t60) +Joint Mortar(t10)
Top Slab Concrete (t200)
Extension Spindle
Step Ladder W300@30cm
Riser Concrete Block(t300) + Joint Mortar(t10)
Gate Valve Ø500 PN16
Drain Pit
Crushed Stone
Leveling Concrete
Cinder Concrete
WATER SUPPLY AND SEWERAGE AUTHORITY OF ULAANBAATAR CITY (USUG) CO., LTD.
THE PREPARATORY STUDY (BASIC DESIGN) ON THE ULAANBAATAR WATER SUPPLY DEVELOPMENT PROJE IN GACHUURT IN MONGOLIA
(CIVIL WORKS)
GATE VALVE CHAMBERS FOR CONVEYANCE PIPE (2/2)
DWG. NO. DR-C-019
SHEET OF
CTI ENGINEERING INTERNATIONAL CO., LTD.
TOKYO, JAPAN