8. 概略設計図

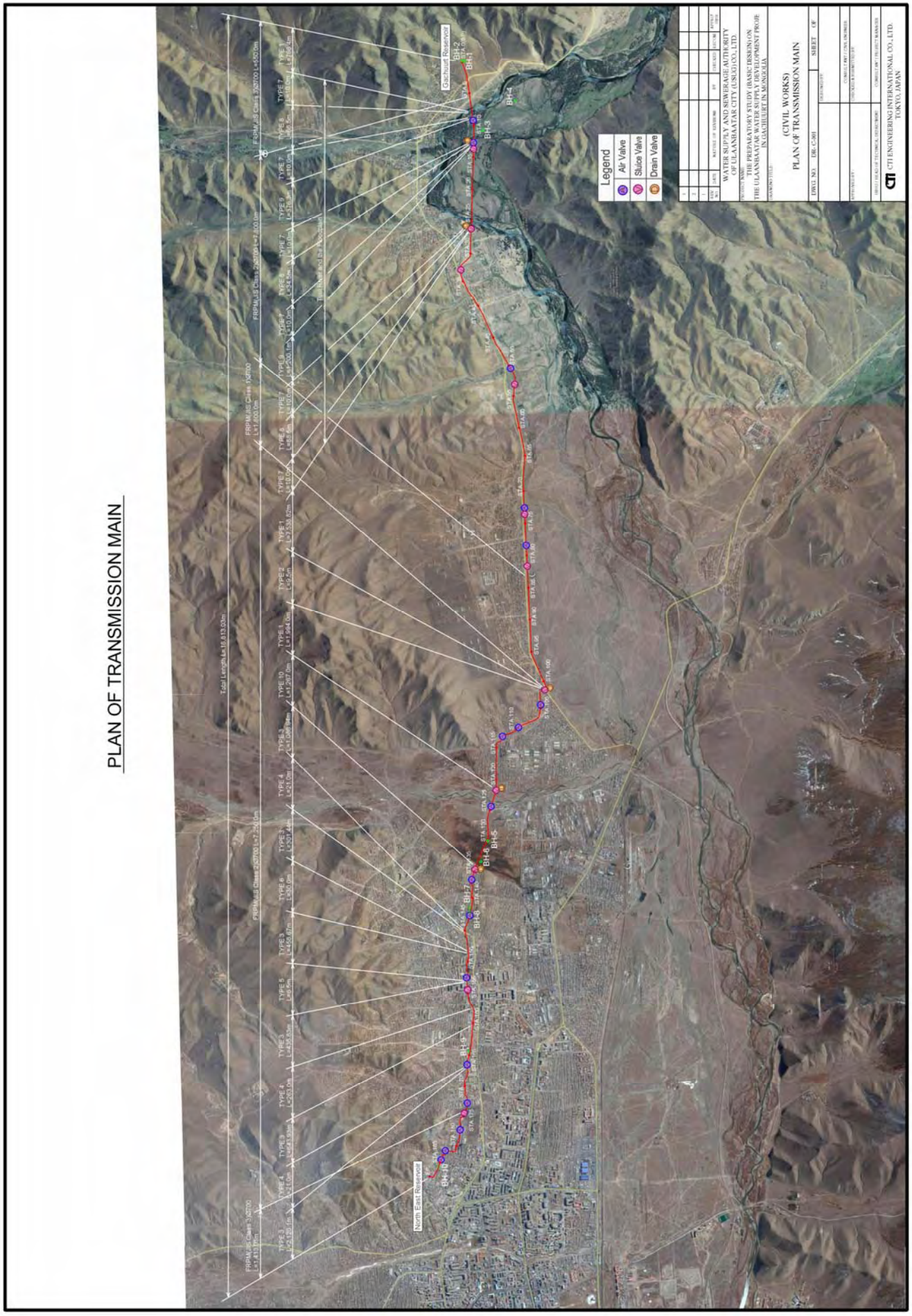
PLAN OF TRANSMISSION MAIN
Legend
Air Valve
Sluice Valve
Drain Valve
North East Reservoir
Catchment Reservoir
BH-1
BH-2
BH-3
BH-4
BH-5
BH-6
BH-7
BH-8
BH-9
BH-10
(CIVIL WORKS)
PLAN OF TRANSMISSION MAIN
CTI ENGINEERING INTERNATIONAL CO., LTD.
TOKYO, JAPAN

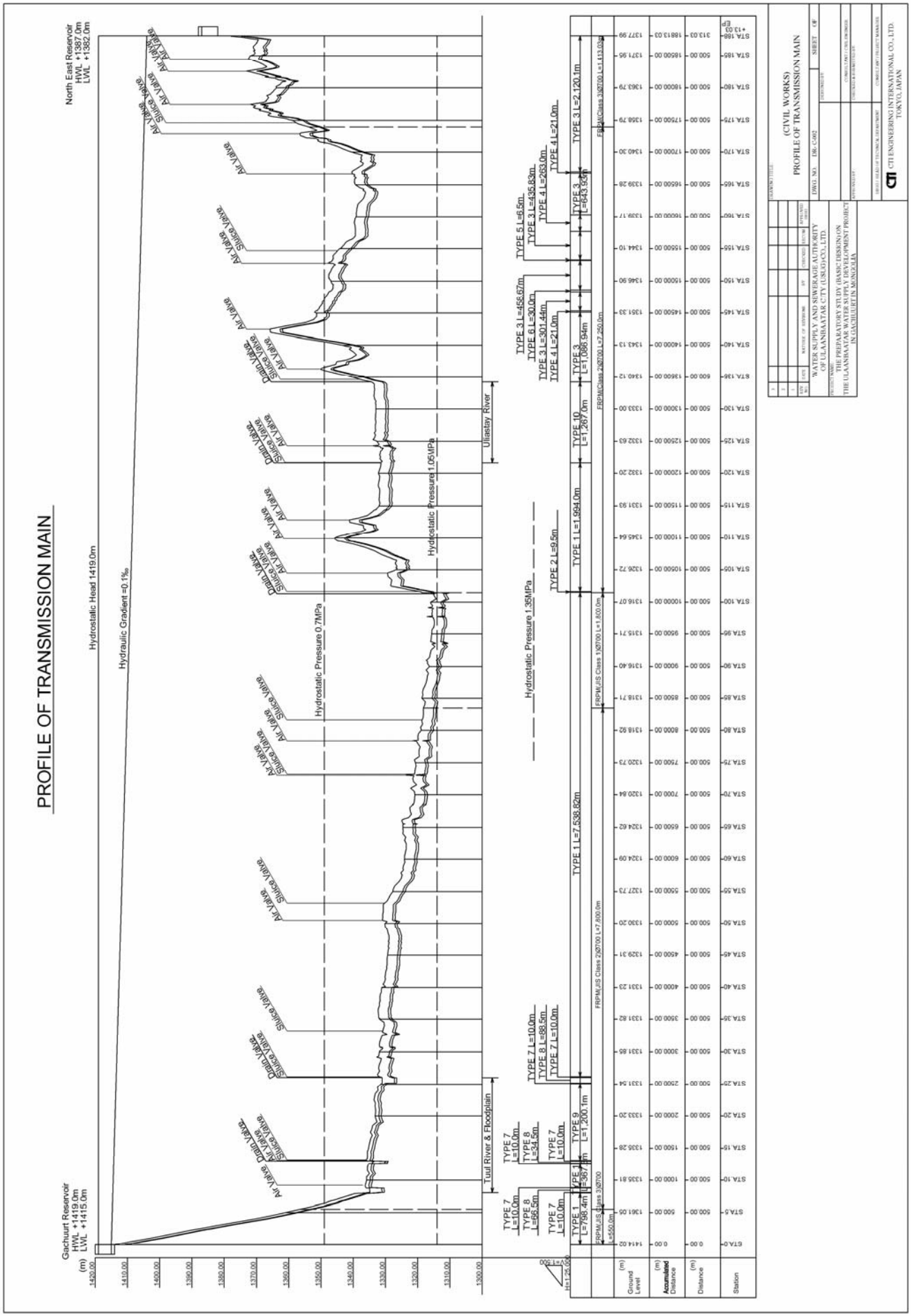
PROFILE OF TRANSMISSION MAIN
Gachuurt Reservoir
HWL +1419.0m
LWL +1415.0m
North East Reservoir
HWL +1387.0m
LWL +1382.0m
Hydrostatic Head 1419.0m
Hydraulic Gradient =0.1‰
Hydrostatic Pressure 0.7MPa
Hydrostatic Pressure 1.05MPa
Hydrostatic Pressure 1.35MPa
Tuul River & Floodplain
Uliastay River
Air Valve
Sluice Valve
Drain Valve
TYPE 1 L=798.4m
TYPE 1 L=367.1m
TYPE 9 L=1,200.1m
TYPE 7 L=10.0m
TYPE 8 L=66.5m
TYPE 8 L=34.5m
TYPE 7 L=10.0m
TYPE 7 L=10.0m
TYPE 8 L=88.5m
TYPE 7 L=10.0m
TYPE 1 L=7,538.82m
TYPE 1 L=1,994.0m
TYPE 2 L=9.5m
TYPE 10 L=1,267.0m
TYPE 3 L=1,086.94m
TYPE 3 L=643.93m
TYPE 3 L=2,120.1m
TYPE 4 L=21.0m
TYPE 4 L=263.0m
TYPE 3 L=435.83m
TYPE 5 L=6.5m
TYPE 3 L=301.44m
TYPE 6 L=30.0m
TYPE 3 L=458.67m
FRPM/JIS Class 1Ø700 L=1,800.0m
FRPM/JIS Class 2Ø700 L=7,250.0m
FRPM/JIS Class 3Ø700 L=1,413.0m
FRPM/JIS Class 2Ø700 L=7,800.0m
FRPM/JIS Class 3Ø700 L=550.0m
Ground Level
Accumulated Distance
Distance
Station
(CIVIL WORKS)
PROFILE OF TRANSMISSION MAIN
WATER SUPPLY AND SEWERAGE AUTHORITY OF ULAANBAATAR CITY (USUG) CO., LTD.
THE PREPARATORY STUDY (BASIC DESIGN) ON THE ULAANBAATAR WATER SUPPLY DEVELOPMENT PROJECT IN GACHUURT IN MONGOLIA
CTI ENGINEERING INTERNATIONAL CO., LTD.
TOKYO, JAPAN

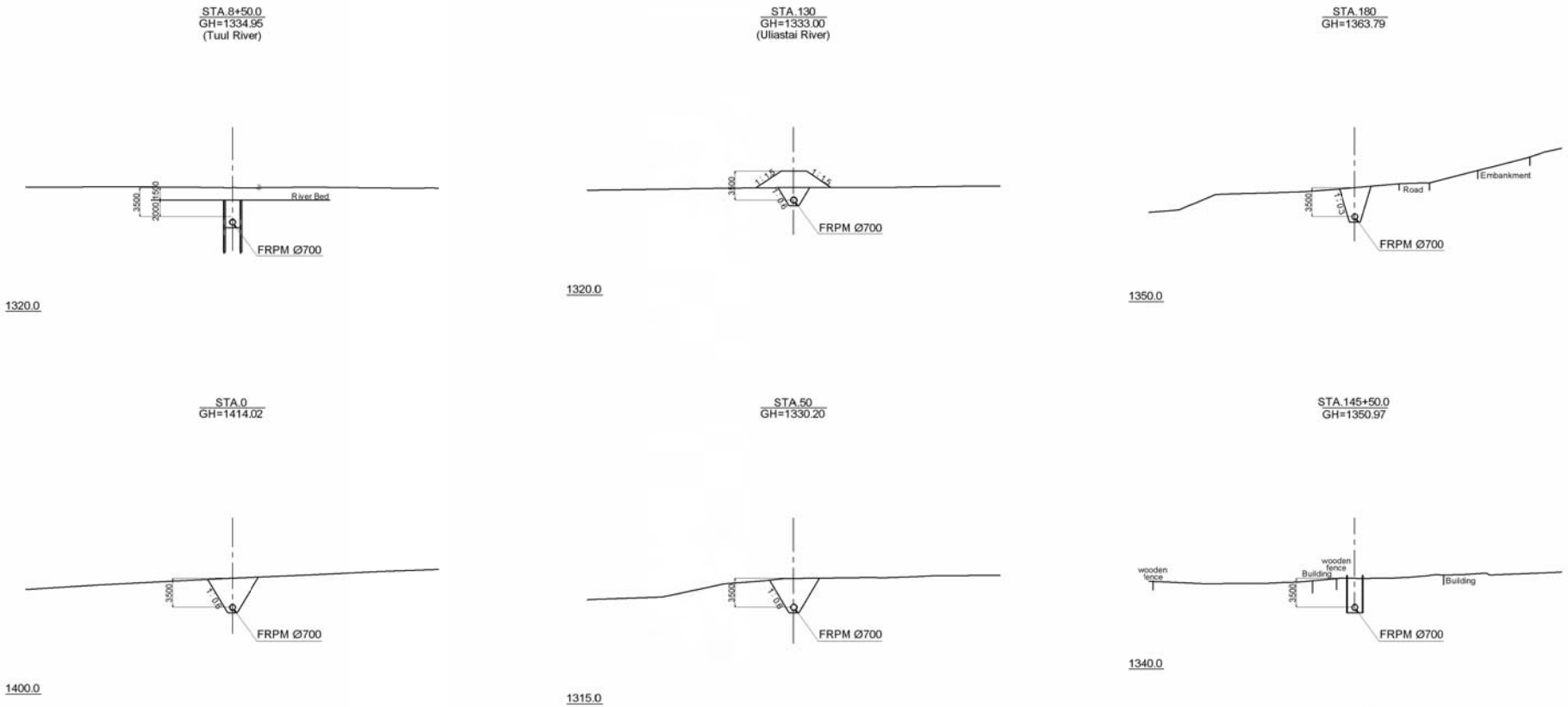

CROSS SECTION OF TRANSMISSION MAIN

REV. NO.	DATE	NATURE OF REVISIONS	BY	CHECKED	RECOM	APPROV. DISC
3						
2						
1						

WATER SUPPLY AND SEWERAGE AUTHORITY
OF ULAANBAATAR CITY (USUG) CO., LTD.

PROJECT NAME:
THE PREPARATORY STUDY (BASIC DESIGN) ON
THE ULAANBAATAR WATER SUPPLY DEVELOPMENT PROJE
IN GACHUURT IN MONGOLIA

DRAWING TITLE:
(CIVIL WORKS)
CROSS SECTION OF
TRANSMISSION MAIN

DWG. NO. DR- C-003 SHEET OF

DESIGNED BY:
CONSULTANT / CIVIL ENGINEER
APPROVED BY:
CHECKED & SUBMITTED BY:
DEPUTY HEAD OF TECHNICAL DEPARTMENT
CONSULTANT / PROJECT MANAGER

CTI ENGINEERING INTERNATIONAL CO., LTD.
TOKYO, JAPAN

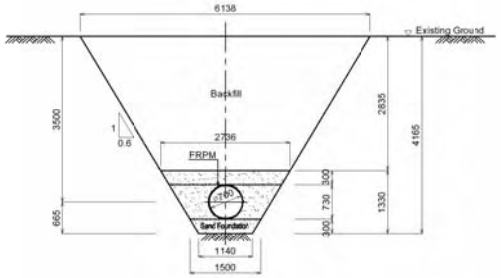

SAND AND GRAVEL EXCAVATION IN UNPAVED SECTION
TYPE 1

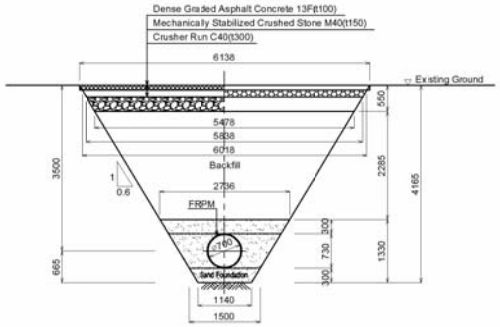

SAND AND GRAVEL EXCAVATION IN ASPHALT-PAVED SECTION
TYPE 2

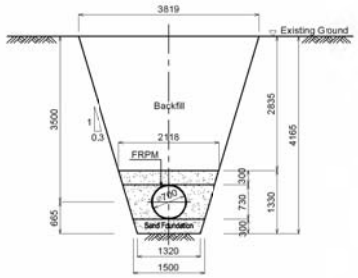

SOFT ROCK EXCAVATION IN UNPAVED SECTION
TYPE 3

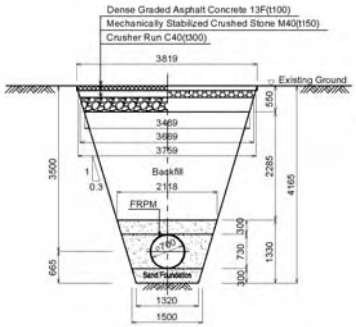

SOFT ROCK EXCAVATION IN ASPHALT-PAVED SECTION
TYPE 4

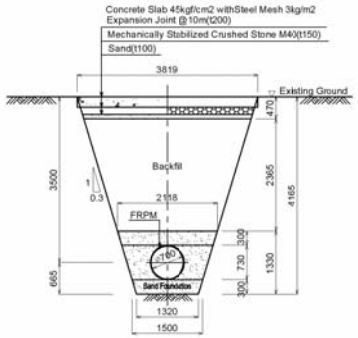

SOFT ROCK EXCAVATION IN CONCRETE-PAVED SECTION
TYPE 5

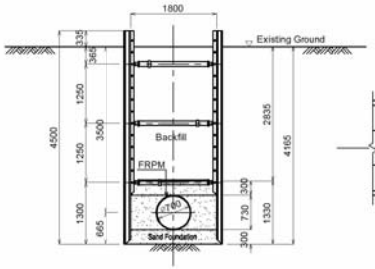

SOFT ROCK EXCAVATION WITH TEMPORARY
SIMPLE SHORING IN UNPAVED SECTION
TYPE 6

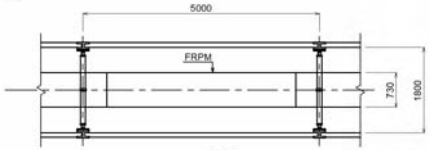

PLAN

TYPICAL CROSS SECTION OF TRANSMISSION MAIN 1/2

REV. NO.	DATE	NATURE OF REVISION	BY	CHECKED	REVIEW	APPROVED
3						
2						
1						

WATER SUPPLY AND SEWERAGE AUTHORITY
OF ULAANBAATAR CITY (USUG) CO., LTD.

PROJECT NAME:
THE PREPARATORY STUDY (BASIC DESIGN) ON
THE ULAANBAATAR WATER SUPPLY DEVELOPMENT PROJE
IN GACHUURT IN MONGOLIA

DRAWING TITLE:
(CIVIL WORKS)
TYPICAL CROSS SECTION OF
TRANSMISSION MAIN (1/2)

DWG. NO. DR-C-004 SHEET OF

DESIGNED BY
CONSULTANT / CIVIL ENGINEER
APPROVED BY
CHECKED & SUBMITTED BY
DIRECTOR / HEAD OF TECHNICAL DEPARTMENT
CONSULTANT / PROJECT MANAGER

CTI ENGINEERING INTERNATIONAL CO., LTD.
TOKYO, JAPAN

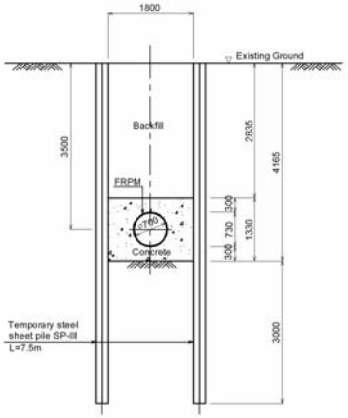

CROSS SECTION OF PIPE PROTECTION

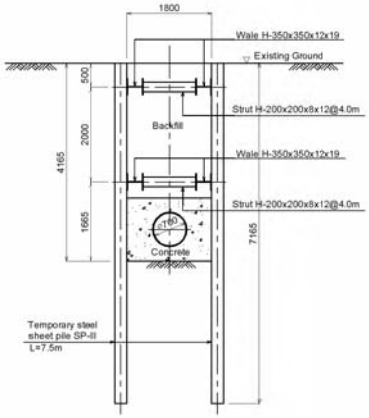

CONFIGURATION OF WALES AND STRUTS

SAND AND GRAVEL EXCAVATION WITH TEMPORARY STEEL SHEET PILE BEFORE AND AFTER TUUL RIVER CROSSING SECTIONS

TYPE 7

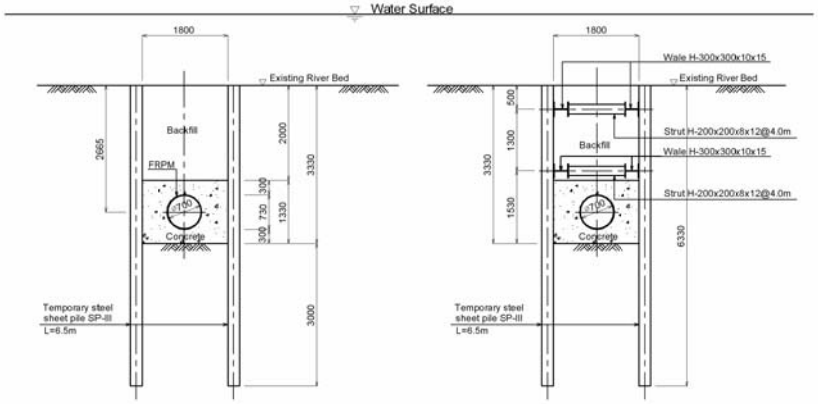

CROSS SECTION OF PIPE PROTECTION

CONFIGURATION OF WALES AND STRUTS

SAND AND GRAVEL EXCAVATION WITH TEMPORARY STEEL SHEET PILE IN TUUL RIVER CROSSING SECTIONS

TYPE 8

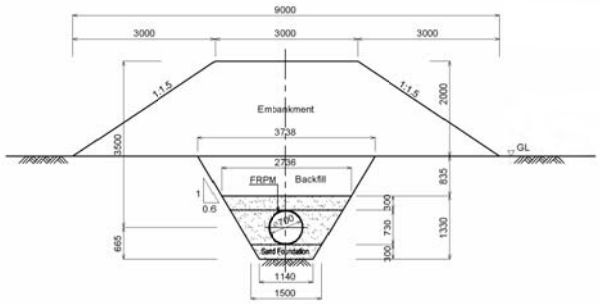

SAND AND GRAVEL EXCAVATION IN TUUL RIVER FLOOD PLAIN

TYPE 9

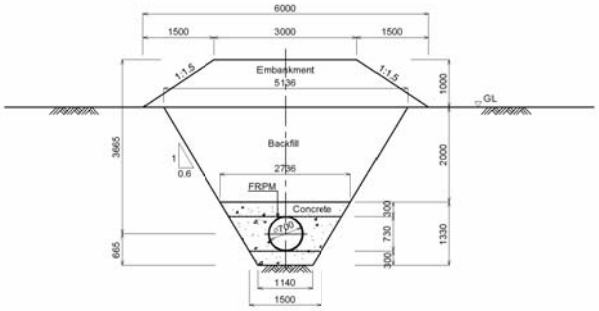

SAND AND GRAVEL EXCAVATION IN ULIASTAY RIVER AND ITS FLOOD PLAIN CROSSING SECTION

TYPE 10

TYPICAL CROSS SECTION OF TRANSMISSION MAIN 2/2

REV. NO.	DATE	NATURE OF REVISION	BY	CHECKED	REVIEW	APPROVED
3						
2						
1						

WATER SUPPLY AND SEWERAGE AUTHORITY OF ULAANBAATAR CITY (USUG) CO., LTD.

PROJECT NAME: THE PREPARATORY STUDY (BASIC DESIGN) ON THE ULAANBAATAR WATER SUPPLY DEVELOPMENT PROJE IN GACHUURT IN MONGOLIA

DRAWING TITLE: (CIVIL WORKS) TYPICAL CROSS SECTION OF TRANSMISSION MAIN (2/2)

DWG. NO. DR- C-005 SHEET OF

DESIGNED BY:

CONSULTANT / CIVIL ENGINEER

APPROVED BY:

CHECKED & SUBMITTED BY:

DEPUTY HEAD OF TECHNICAL DEPARTMENT

CONSULTANT / PROJECT MANAGER

CTI ENGINEERING INTERNATIONAL CO., LTD. TOKYO, JAPAN

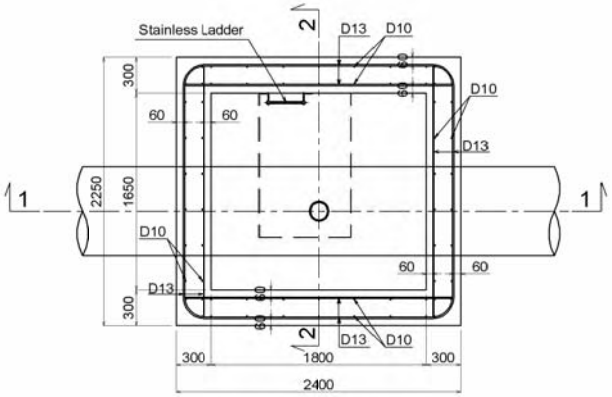

SECTION 3-3

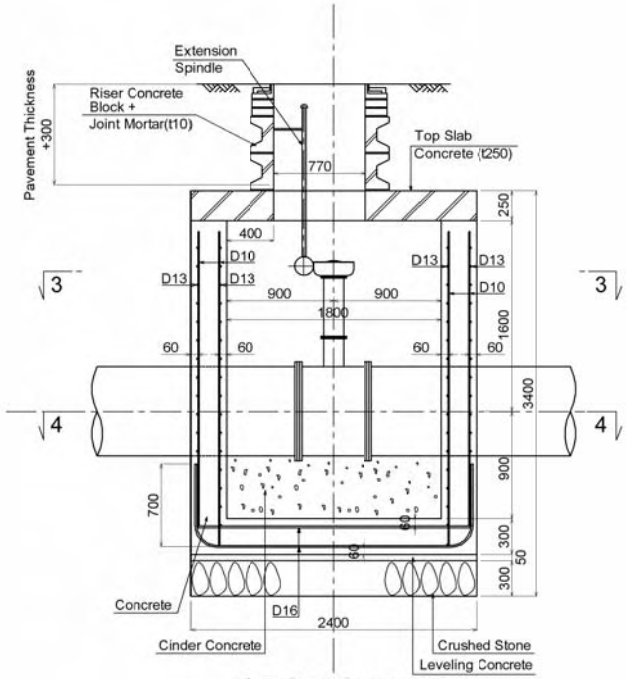

SECTION 1-1

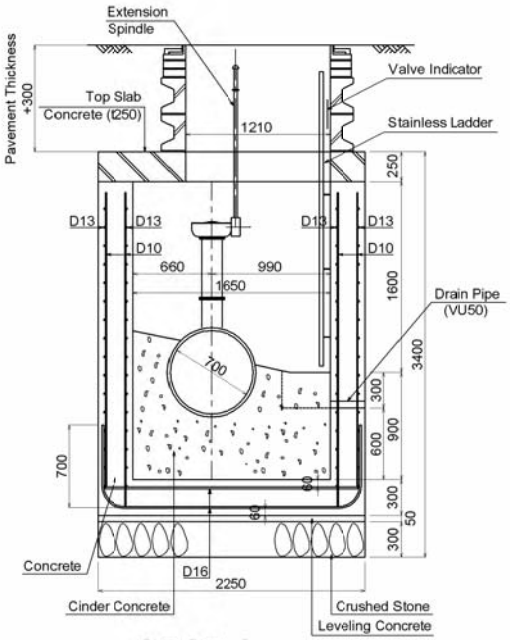

SECTION 2-2

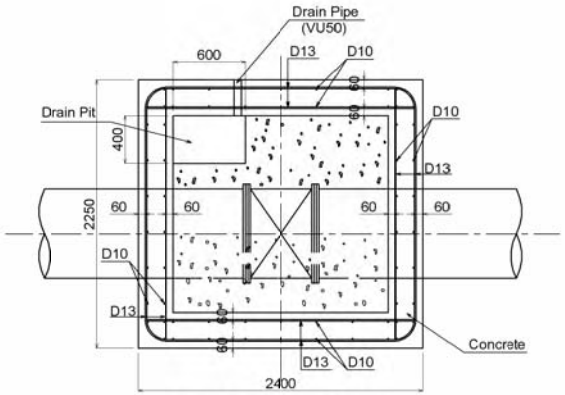

SECTION 4-4

BUTTERFLY VALVE CHAMBER FOR Ø700

REV. NO.	DATE	NATURE OF REVISION	BY	CHECKED	REVIEW	APPROVED
3						
2						
1						

WATER SUPPLY AND SEWERAGE AUTHORITY OF ULAANBAATAR CITY (USUG)CO., LTD.

PROJECT NAME:
THE PREPARATORY STUDY (BASIC DESIGN) ON THE ULAANBAATAR WATER SUPPLY DEVELOPMENT PROJE IN GACHUURT IN MONGOLIA

DRAWING TITLE:
(CIVIL WORKS)
BUTTERFLY VALVE CHAMBER
FOR ϕ 700

DWG. NO. DR- C006 SHEET OF

DESIGNED BY:
CONSULTANT / CIVIL ENGINEER
APPROVED BY:
CHECKED & SUBMITTED BY:
HEAD / HEAD OF TECHNICAL DEPARTMENT
CONSULTANT / PROJECT MANAGER

CTI ENGINEERING INTERNATIONAL CO., LTD.
TOKYO, JAPAN

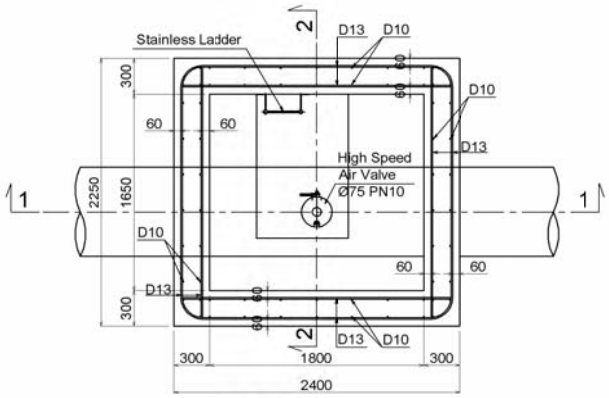

SECTION 3-3

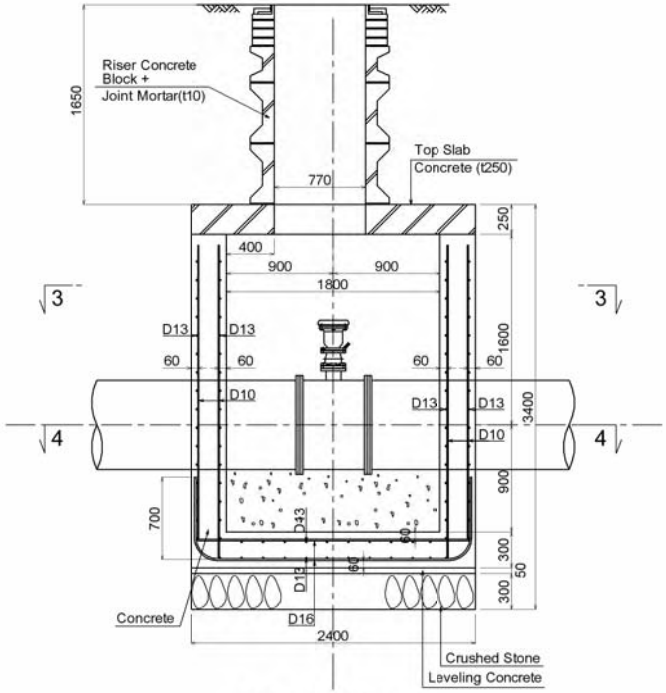

SECTION 1-1

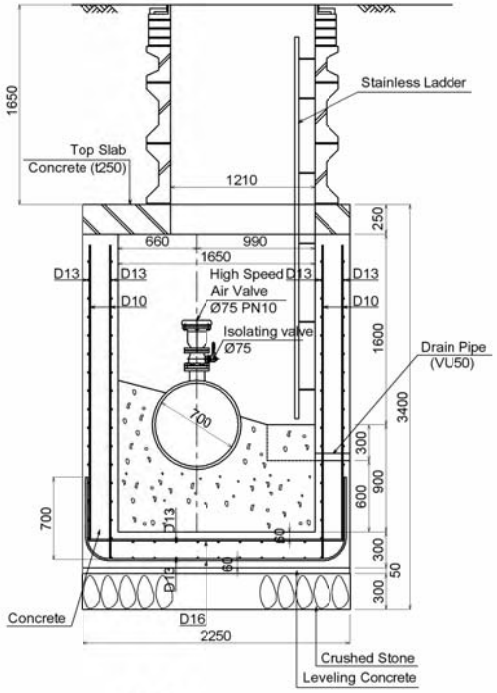

SECTION 2-2

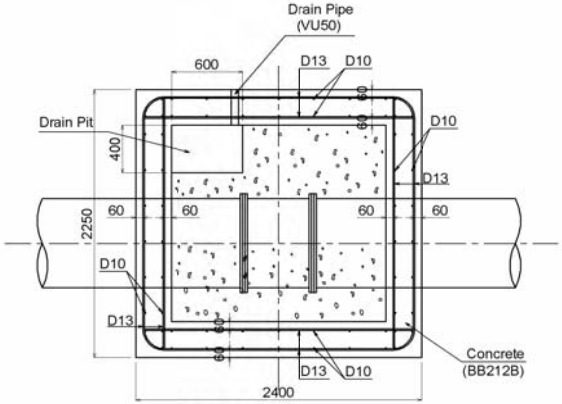

SECTION 4-4

AIR VALVE CHAMBER FOR Ø700

REV. NO.	DATE	NATURE OF REVISION	BY	CHECKED	REC'M	APPROV. DATE
1						
2						
3						

WATER SUPPLY AND SEWERAGE AUTHORITY
OF ULAANBAATAR CITY (USUG) CO., LTD.

PROJECT NAME:
THE PREPARATORY STUDY (BASIC DESIGN) ON
THE ULAANBAATAR WATER SUPPLY DEVELOPMENT PROJE
IN BACHURT IN MONGOLIA

DRAWING TITLE:
(CIVIL WORKS)
AIR VALVE CHAMBER
FOR ϕ 700

DWG. NO. DR- C-607 SHEET OF

DESIGNED BY:
CONSULTANT / CIVIL ENGINEER
APPROVED BY:
CHECKED & SUBMITTED BY:
USUG / HEAD OF TECHNICAL DEPARTMENT
CONSULTANT / PROJECT MANAGER

CTI ENGINEERING INTERNATIONAL CO., LTD.
TOKYO, JAPAN

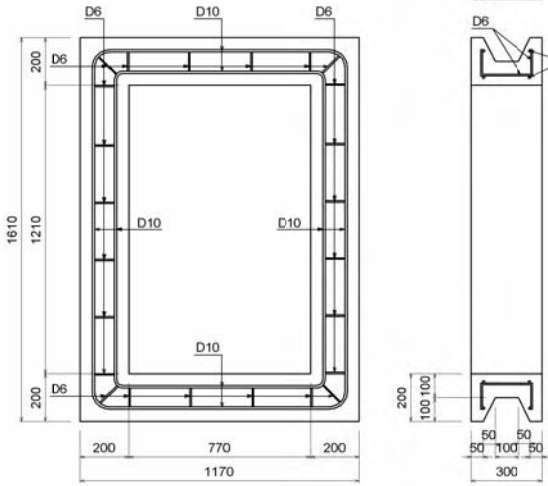

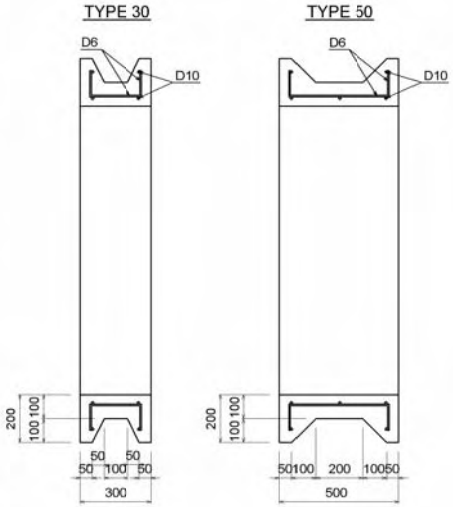

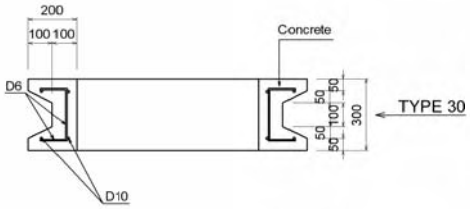

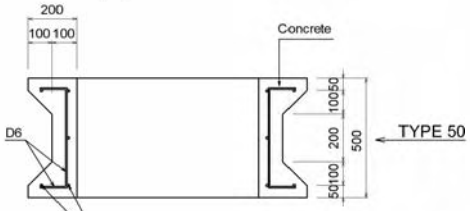

RISER CONCRETE (1210×770)

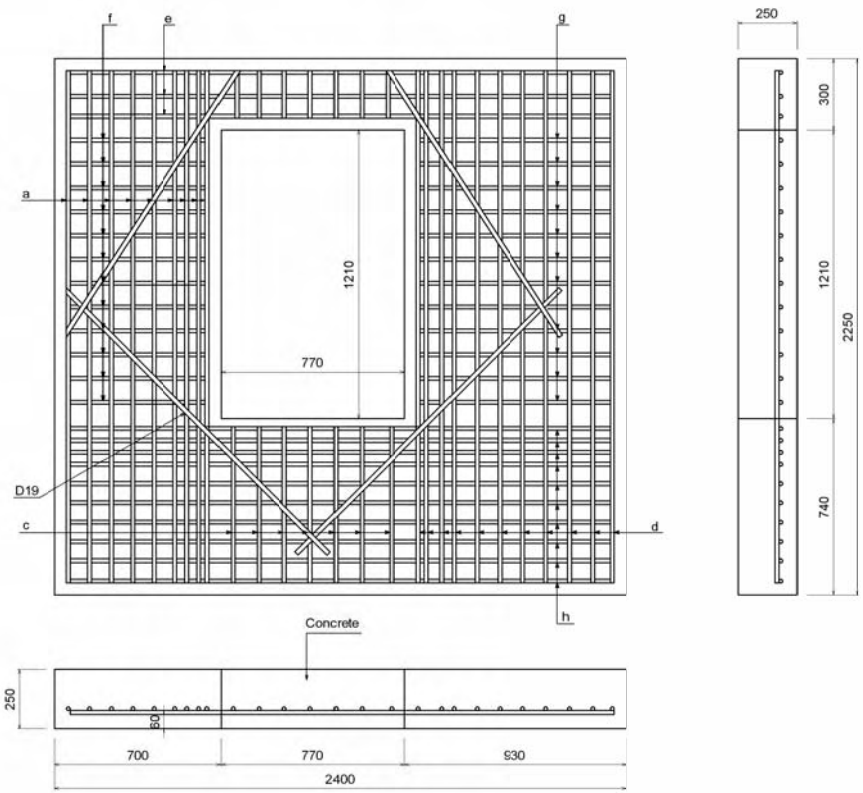

TOP SLAB

Reinforcing Bar Table

Symbol / D	Reinforcing Bar Diameter	a n×l(m)	b n×l(m)	c n×l(m)	d n×l(m)	e n×l(m)	f n×l(m)	g n×l(m)	h n×l(m)
700	D16	9×2.15	7×0.20	7×0.65	11×2.15	3×2.30	12×0.60	12×0.85	10×2.30

NO.	DATE	NATURE OF REVISION	BY	CHECKED	REVIEW	APPROVED
3						
2						
1						

WATER SUPPLY AND SEWERAGE AUTHORITY OF ULAANBAATAR CITY (USUG) CO., LTD.

PROJECT NAME:
THE PREPARATORY STUDY (BASIC DESIGN) ON THE ULAANBAATAR WATER SUPPLY DEVELOPMENT PROJE IN GACHUURT IN MONGOLIA

DRAWING TITLE:
(CIVIL WORKS)
REINFORCEMENT DRAWING
OF VALVE CHAMBER

DWG. NO. DR- C-008 SHEET OF

DESIGNED BY
CONSULTANT / CIVIL ENGINEER
APPROVED BY
CHECKED & SUBMITTED BY
HEAD / HEAD OF TECHNICAL DEPARTMENT
CONSULTANT / PROJECT MANAGER

CTI ENGINEERING INTERNATIONAL CO., LTD.
TOKYO, JAPAN

REINFORCEMENT DRAWING OF VALVE CHAMBER

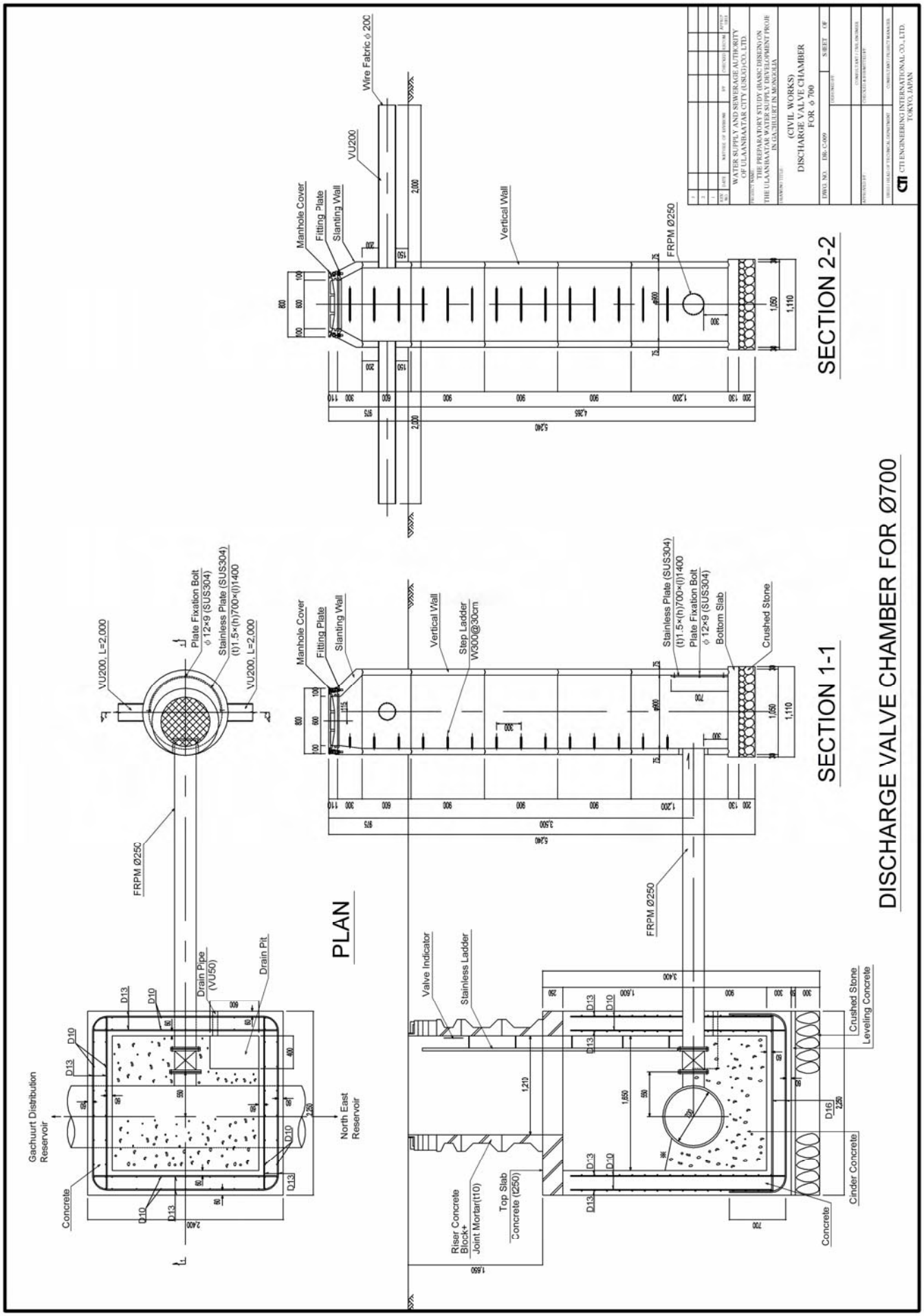
DISCHARGE VALVE CHAMBER FOR Ø700
SECTION 2-2
SECTION 1-1
PLAN
Wire Fabric ϕ 20C
VU200
Manhole Cover
Fitting Plate
Slanting Wall
Vertical Wall
FRPM Ø250
Step Ladder
W300@30cm
Stainless Plate (SUS304)
(t)1.5×(h)700×(l)1400
Plate Fixation Bolt
ϕ 12×9 (SUS304)
Bottom Slab
Crushed Stone
VU200, L=2,000
Drain Pipe
(VU50)
Drain Pit
Gachuurt Distribution Reservoir
North East Reservoir
Concrete
Valve Indicator
Stainless Ladder
Riser Concrete Block+ Joint Mortar(110)
Top Slab Concrete (1250)
Leveling Concrete
Cinder Concrete
WATER SUPPLY AND SEWERAGE AUTHORITY OF ULAANBAATAR CITY (USGO) CO., LTD.
THE PREPARATORY STUDY (BASIC DESIGN) ON THE ULAANBAATAR WATER SUPPLY DEVELOPMENT PROJECT IN ULAANBAATAR MONGOLIA
(CIVIL WORKS)
DISCHARGE VALVE CHAMBER FOR ϕ 700
DWG. NO. DR-C-009
SHEET OF
CTI ENGINEERING INTERNATIONAL CO., LTD.
TOKYO, JAPAN

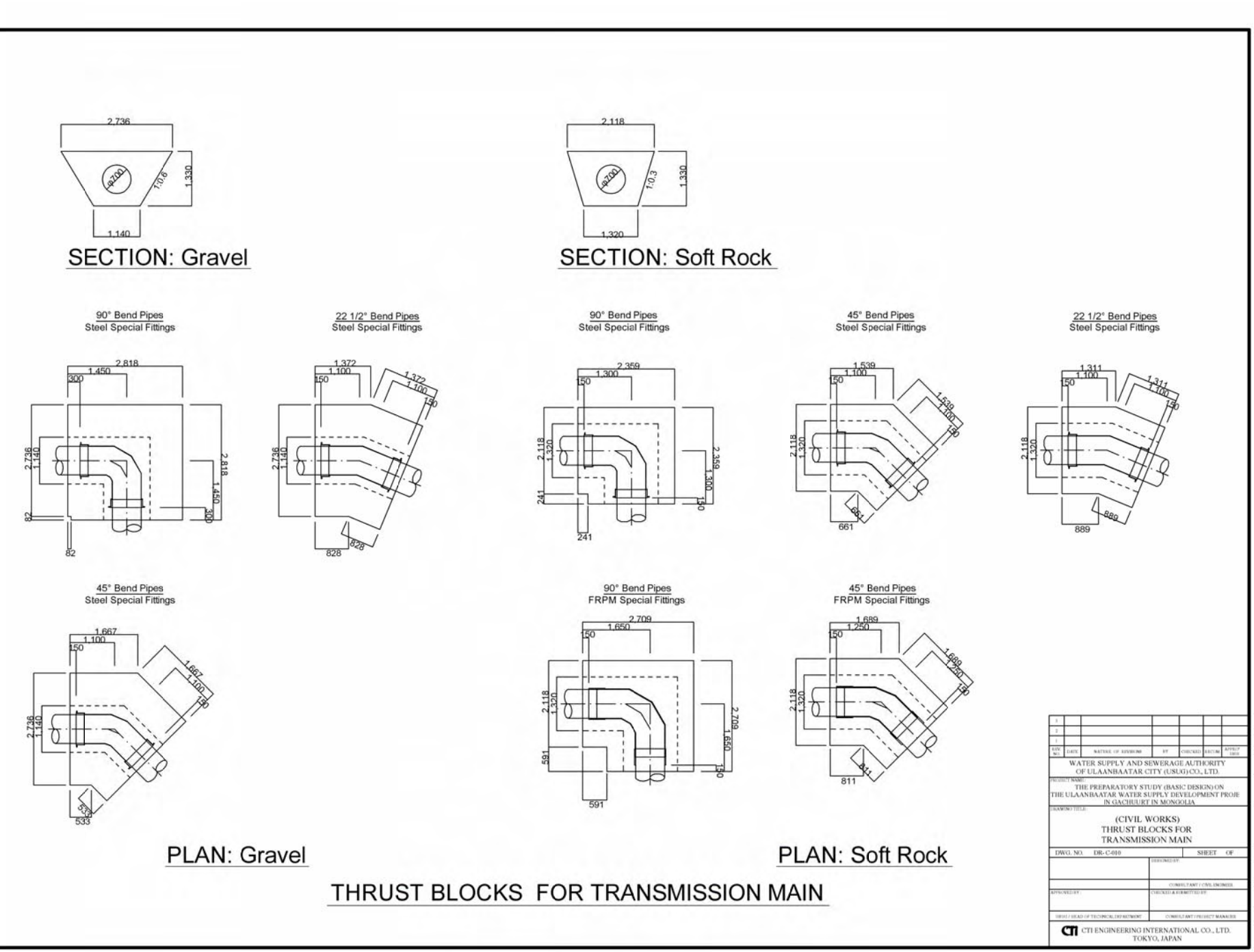
SECTION: Gravel
SECTION: Soft Rock
90° Bend Pipes
Steel Special Fittings
22 1/2° Bend Pipes
Steel Special Fittings
90° Bend Pipes
Steel Special Fittings
45° Bend Pipes
Steel Special Fittings
22 1/2° Bend Pipes
Steel Special Fittings
45° Bend Pipes
Steel Special Fittings
90° Bend Pipes
FRPM Special Fittings
45° Bend Pipes
FRPM Special Fittings
PLAN: Gravel
PLAN: Soft Rock
THRUST BLOCKS FOR TRANSMISSION MAIN
WATER SUPPLY AND SEWERAGE AUTHORITY OF ULAANBAATAR CITY (USUG) CO., LTD.
THE PREPARATORY STUDY (BASIC DESIGN) ON THE ULAANBAATAR WATER SUPPLY DEVELOPMENT PROJE IN GACHUURT IN MONGOLIA
(CIVIL WORKS)
THRUST BLOCKS FOR TRANSMISSION MAIN
DWG. NO. DR-C-010
SHEET OF
CTI ENGINEERING INTERNATIONAL CO., LTD.
TOKYO, JAPAN

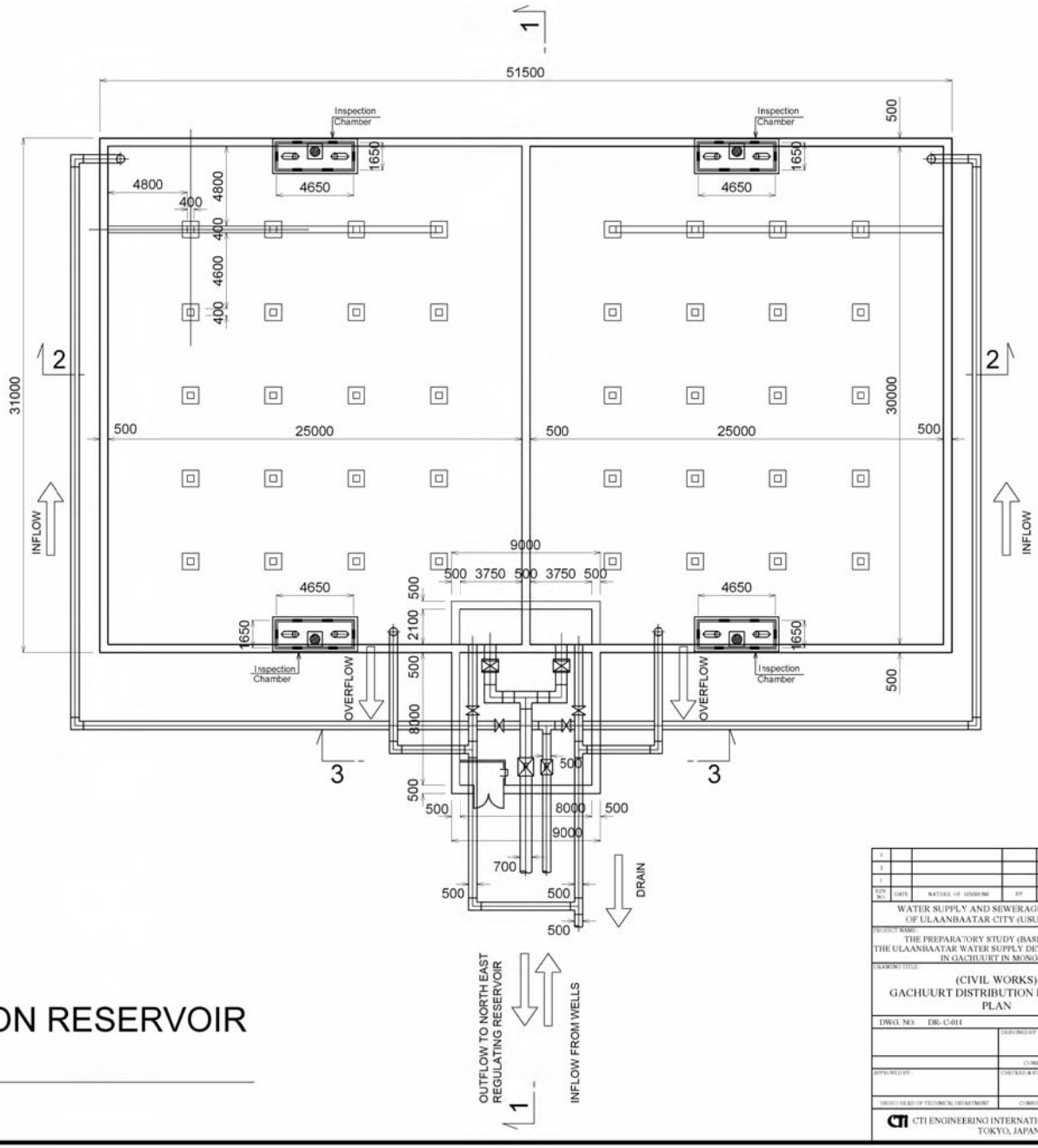

PLAN OF
GACHUURT DISTRIBUTION RESERVOIR
V=3,000x2=6,000m3

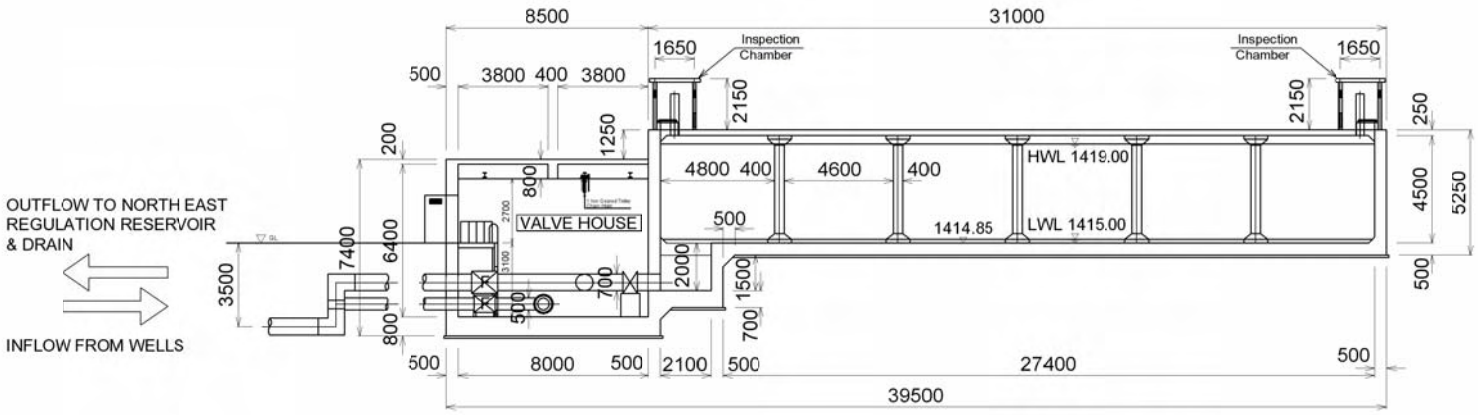

SECTION 1-1

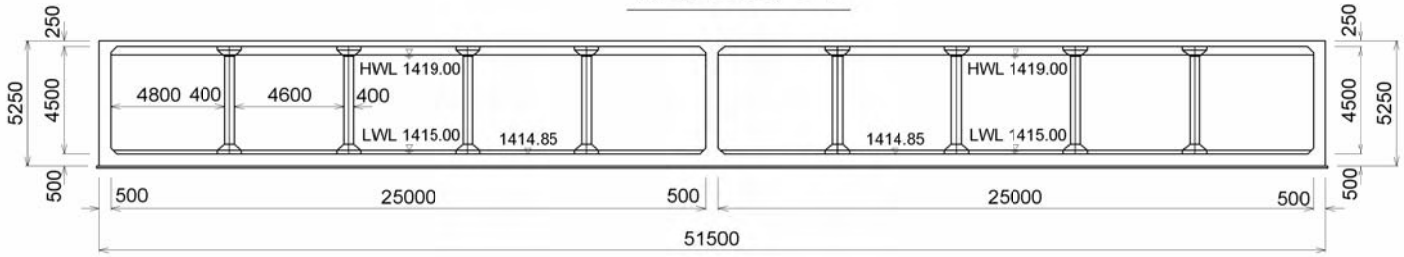

SECTION 2-2

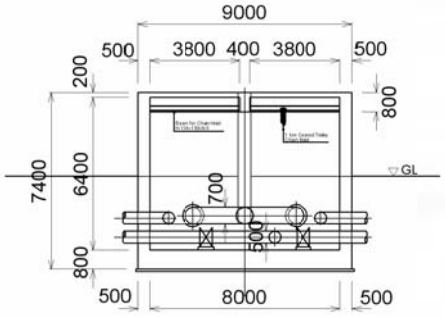

SECTION 3-3

SECTIONS OF GACHUURT DISTRIBUTION RESERVOIR

REV. NO.	DATE	NATURE OF REVISION	BY	CHECKED	REVIEW	APPROVED
1						
2						
3						

WATER SUPPLY AND SEWERAGE AUTHORITY OF ULAANBAATAR CITY (USUG) CO., LTD.

PROJECT NAME: THE PREPARATORY STUDY (BASIC DESEIN) ON THE ULAANBAATAR WATER SUPPLY DEVELOPMENT PROJE IN GACHUURT IN MONGOLIA

DRAWING TITLE: (CIVIL WORKS) GACHUURT DISTRIBUTION RESERVOIR SECTIONS

DWG. NO. DR- C-012 SHEET OF

DESIGNED BY: CONSULTANT / CIVIL ENGINEER

APPROVED BY: CHECKED & SUBMITTED BY: DEPUTY / HEAD OF TECHNICAL DEPARTMENT CONSULTANT / PROJECT MANAGER

CTI ENGINEERING INTERNATIONAL CO., LTD. TOKYO, JAPAN

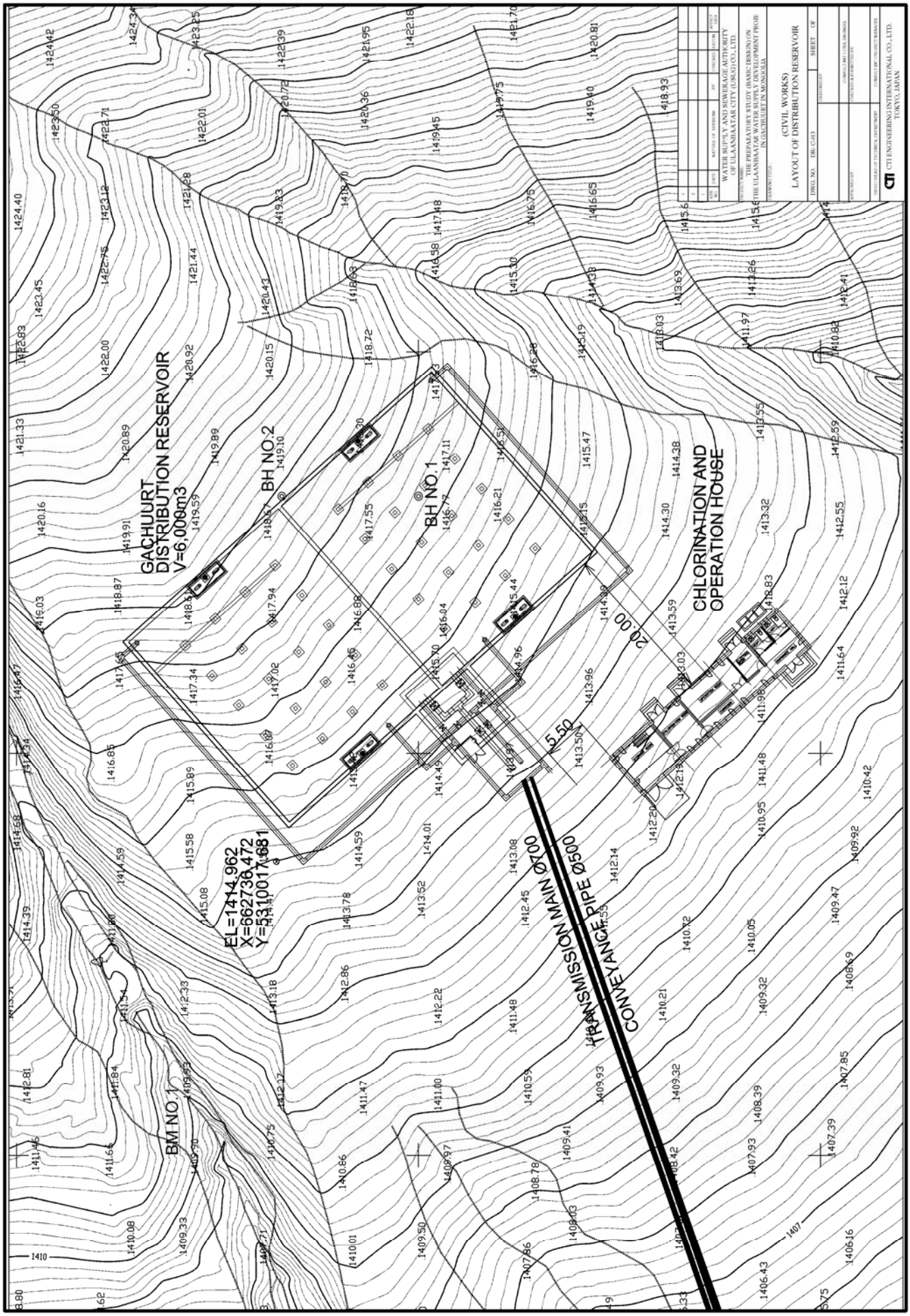
GACHUURT
DISTRIBUTION RESERVOIR
V=6,000m3
BH NO.2
BH NO.1
CHLORINATION AND
OPERATION HOUSE
EL=1414.962
X=662736.472
Y=5310017.681
TRANSMISSION MAIN Ø700
CONVEYANCE PIPE Ø500
20.00
5.50
BM NO.1
WATER SUPPLY AND SEWERAGE AUTHORITY
OF ULAANBAATAR CITY (USUG) CO., LTD.
THE PREPARATORY STUDY (BASIC DESIGN) ON
THE ULAANBAATAR WATER SUPPLY DEVELOPMENT PROJE
IN GACHUURT IN MONGOLIA
(CIVIL WORKS)
LAYOUT OF DISTRIBUTION RESERVOIR
CTI ENGINEERING INTERNATIONAL CO., LTD.
TOKYO, JAPAN

NORTH EAST
DISTRIBUTION
RESERVOIR
V=3,000m3 x 2=6,000m3
STA.188+40.05 (EP)
Ø500
FRPM Ø700
STA.188
IP90
STA.187+89.66 (IP.90)
TRANSMISSION MAIN Ø700
IP89
IA=22-30-00
STA.187+39.05 (IP.89)
WATER SUPPLY AND SEWERAGE AUTHORITY
OF ULAANBAATAR CITY (USUG) CO., LTD.
THE PREPARATORY STUDY (BASIC DESIGN) ON
THE ULAANBAATAR WATER SUPPLY DEVELOPMENT PROJE
IN GACHUURT IN MONGOLIA
(CIVIL WORKS)
TRANSMISSION MAIN
PIPE CONNECTION TO
NORTH EAST RESERVOIR
DWG. NO. DR- C-014
SHEET OF
CTI ENGINEERING INTERNATIONAL CO., LTD.
TOKYO, JAPAN