E2-2 (26TH OF JULY ST. - RAMSIS ST.)

INDEX OF DRAWINGS
E2-2

DWG. NO.	DRAWING TITLE	SHEET NO.
ALIGMENT PLAN		
E2-2/A-01	ALIGMENT PLAN	1
LAND PLAN		
E2-2/L-01	LAND PLAN	1
ROADWAY		
E2-2/R-01	PLAN & PROFILE STA. 0+000 – STA. 1+200	1
E2-2/R-02	PLAN & PROFILE STA. 1+200 – STA. 1+875	2
E2-2/R-03	TYPICAL ROAD SECTION	3
E2-2/R-04	CROSS SECTION (1/2)	4
E2-2/R-05	CROSS SECTION (2/2)	5
STRUCTURES		
E2-2/S-01	E2-2 OVERALL PLAN & LAYOUT	1
E2-2/S-02	RC SINGLE COLUMN PIER – SINGLE CELLULAR RC DECK (EXP/CONT)	2
E2-2/S-03	STEEL FRAME PIER TYPE 1 (25M) – SINGLE DECK (EXP/CONT)	3
E2-2/S-04	STEEL FRAME PIER TYPE 2 (40M) – SINGLE DECK (EXP/CONT)	4
E2-2/S-05	STEEL FRAME PIER TYPE 3 (60M) – SINGLE DECK (EXP/CONT)	5
E2-2/S-06	STEEL FRAME PIER TYPE 4 (60M) – DOUBLE DECK (EXP/CONT)	6
E2-2/S-07	STEEL FRAME PIER TYPE 5 (50M) – DOUBLE DECK (EXP/CONT)	7
E2-2/S-08	STEEL ASYMMETRICAL PIER TYPE 1 (25M) – SINGLE DECK (EXP/CONT)	8
E2-2/S-09	STEEL ASYMMETRICAL PIER TYPE 2 (50M) – SINGLE DECK (EXP/CONT)	9
E2-2/S-10	SINGLE COLUMN STEEL PIER TYPE 1	10
E2-2/S-11	SINGLE COLUMN STEEL PIER TYPE 2	11
E2-2/S-12	SINGLE COLUMN COMPOSITE PIER TYPE 1	12
E2-2/S-13	SINGLE COLUMN COMPOSITE PIER TYPE 2	13
E2-2/S-14	TWIN COMPOSITE COLUMN & STEEL COPING PIER TYPE 1 (50M)	14
E2-2/S-15	TWIN COMPOSITE COLUMN & STEEL COPING PIER TYPE 2 (50M)	15
E2-2/S-16	TWIN COMPOSITE COLUMN & STEEL COPING PIER TYPE 3 (25M)	16
E2-2/S-17	TWIN COMPOSITE COLUMN & STEEL COPING PIER TYPE 4 (25M)	17
E2-2/S-18	RC SINGLE COLUMN PIER – SINGLE PCDG DECK – TYPE 1	18
E2-2/S-19	RC SINGLE COLUMN PIER – SINGLE PCDG DECK – TYPE 2	19
E2-2/S-20	SUPERSTRUCTURE LAYOUT & SECTIONS 1 OF 4	20
E2-2/S-21	SUPERSTRUCTURE LAYOUT & SECTIONS 2 OF 4	21
E2-2/S-22	SUPERSTRUCTURE LAYOUT & SECTIONS 3 OF 4	22
E2-2/S-23	SUPERSTRUCTURE LAYOUT & SECTIONS 4 OF 4	23

1 SCALE SECTION

2 SCALE SECTION

3 SCALE SECTION

4 SCALE SECTION

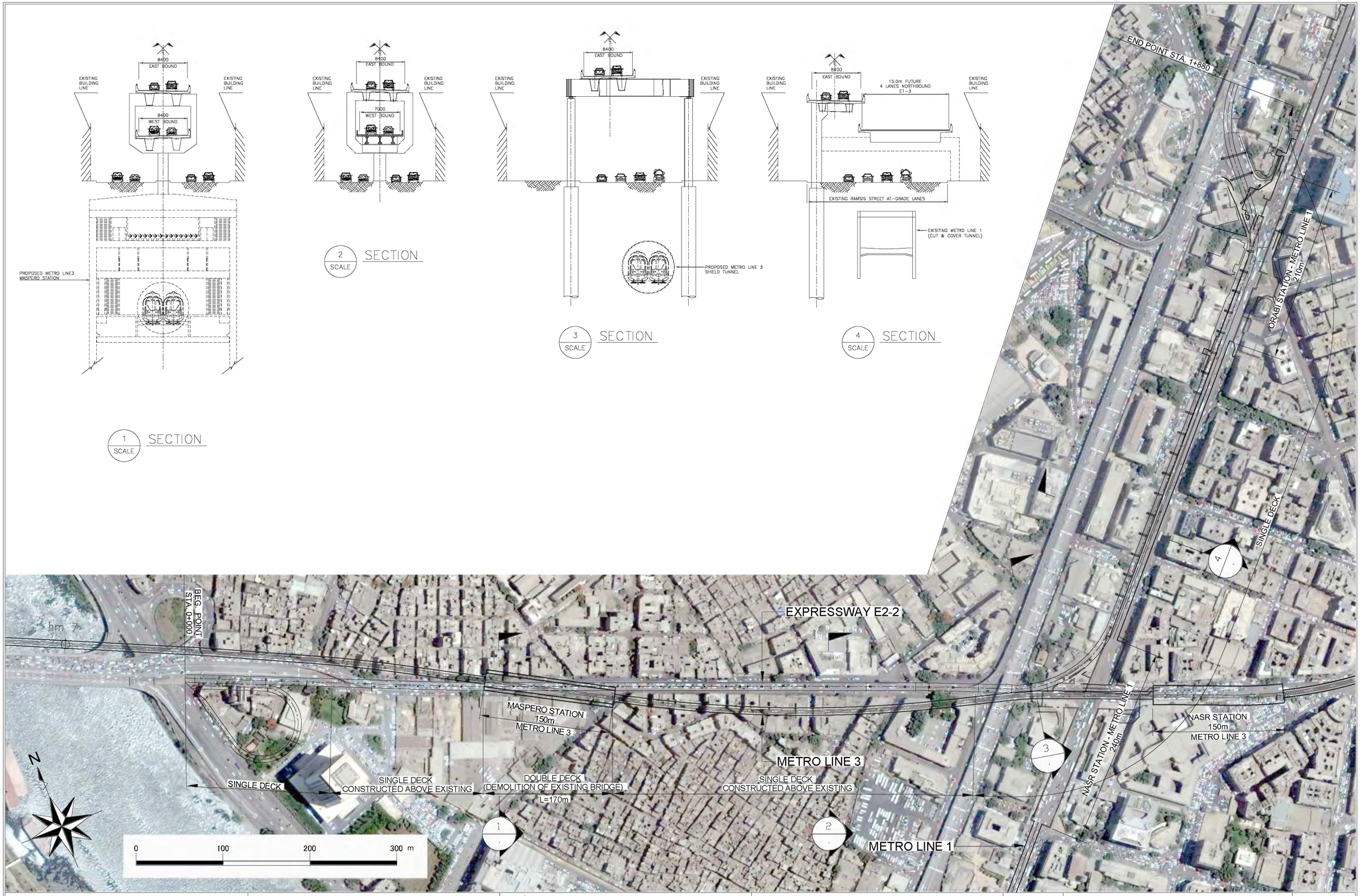

KATAHIRA & ENGINEERS INTERNATIONAL PRICE WATERHOUSE COOPERS ADVISORY CO., LTD.	JICA JAPAN INTERNATIONAL COOPERATION AGENCY	GENERAL AUTHORITY FOR ROADS BRIDGES AND LAND TRANSPORT (GARBLT) MINISTRY OF TRANSPORT ARAB REPUBLIC OF EGYPT	PROJECT AND LOCATION : FEASIBILITY STUDY ON HIGH PRIORITY URBAN TOLL EXPRESSWAYS IN CAIRO E2-2	SCALE : 1:4000 FULL SIZE A3	DRAWING TITLE : E2-2 Alignment PLAN Sta. 0+000 - Sta. 1+880	DRAWING NO : E2-2/A-01 SHEET NO : 1/1

Land required 800m^2

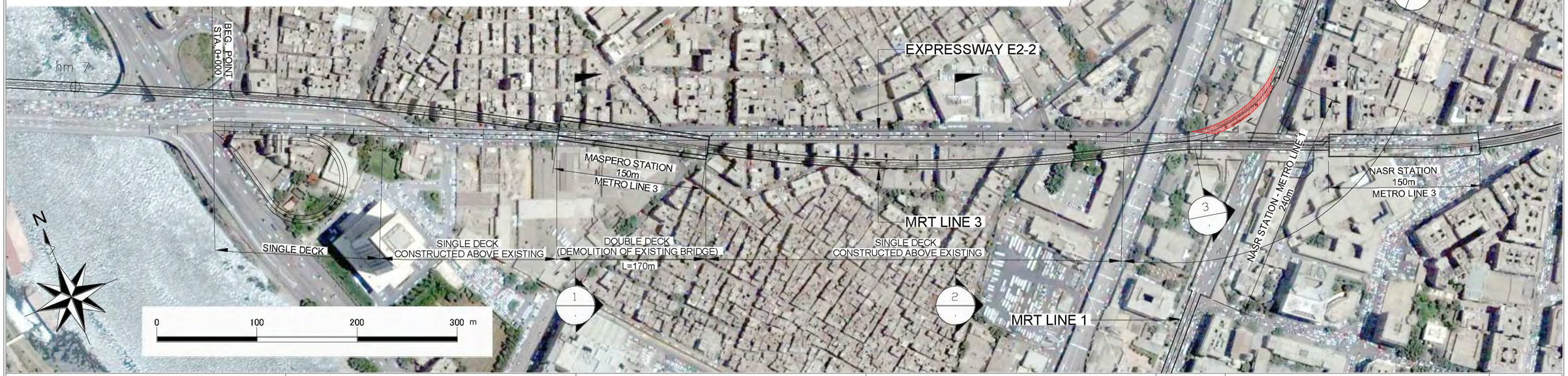

KATAHIRA & ENGINEERS INTERNATIONAL PRICE WATERHOUSE COOPERS ADVISORY CO., LTD.	JICA JAPAN INTERNATIONAL COOPERATION AGENCY	GENERAL AUTHORITY FOR ROADS BRIDGES AND LAND TRANSPORT (GARBLT) MINISTRY OF TRANSPORT ARAB REPUBLIC OF EGYPT	PROJECT AND LOCATION : FEASIBILITY STUDY ON HIGH PRIORITY URBAN TOLL EXPRESSWAYS IN CAIRO E2-2	SCALE : 1:4000 FULL SIZE A3	DRAWING TITLE : E2-2 LAND PLAN

DRAWING NO : E2-2/L-01

SHEET NO : 1/1

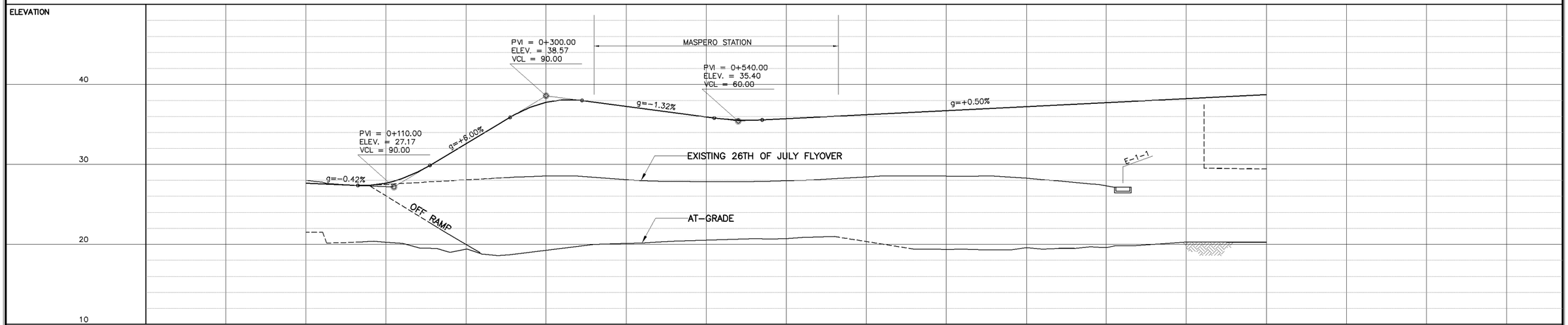

STATION	0+000	0+100	0+200	0+300	0+400	0+500	0+600	0+700	0+800	0+900	1+000	1+100	1+200
FINISHED GRADE	27.63	27.65	32.57	37.75	37.25	35.93	35.70	36.20	36.70	37.20	37.70	38.20	38.70
ORIGINAL GRADE	28.00 / 21.51	28.00 / 20.27	28.06 / 19.40	28.55 / 19.26	28.08 / 20.13	27.84 / 20.52	27.96 / 20.73	28.43	28.53 / 19.37	28.28 / 19.60	27.32 / 19.60	20.30	20.24

HORIZONTAL CURVATURE: R=∞ A=275 | R=1,600 A=275 | R=1,200 | R=∞ | A=400 R=2,800 A=400 | R=∞ A=70 | R=120 | A=70

KATAHIRA & ENGINEERS INTERNATIONAL
PRICE WATERHOUSE COOPERS ADVISORY CO., LTD.

JAPAN INTERNATIONAL COOPERATION AGENCY

GENERAL AUTHORITY FOR ROADS BRIDGES AND LAND TRANSPORT (GARBLT)
MINISTRY OF TRANSPORT
ARAB REPUBLIC OF EGYPT

PROJECT AND LOCATION :
FEASIBILITY STUDY ON
HIGH PRIORITY URBAN TOLL EXPRESSWAYS IN CAIRO
E2-2

SCALE :
H = 1/5,000
V = 1/500
FULL SIZE A3

DRAWING TITLE :
E2-2
PLAN AND PROFILE
Sta. 0+000 - Sta. 1+200

DRAWING NO : E2-2/R-01

SHEET NO : 1/5

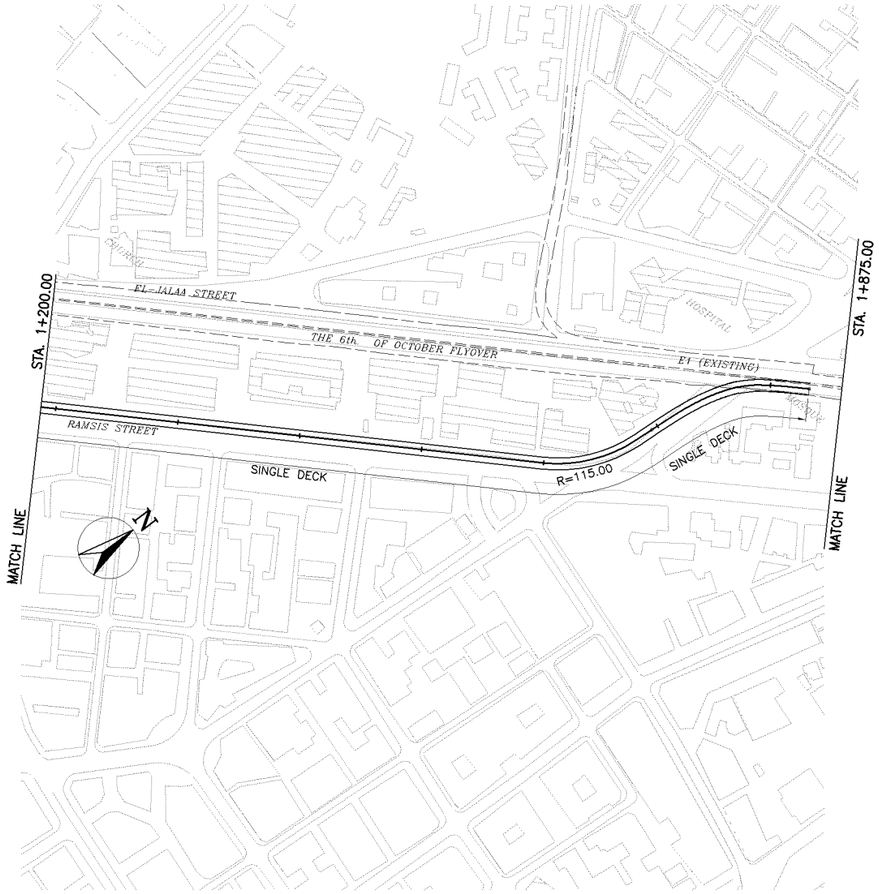

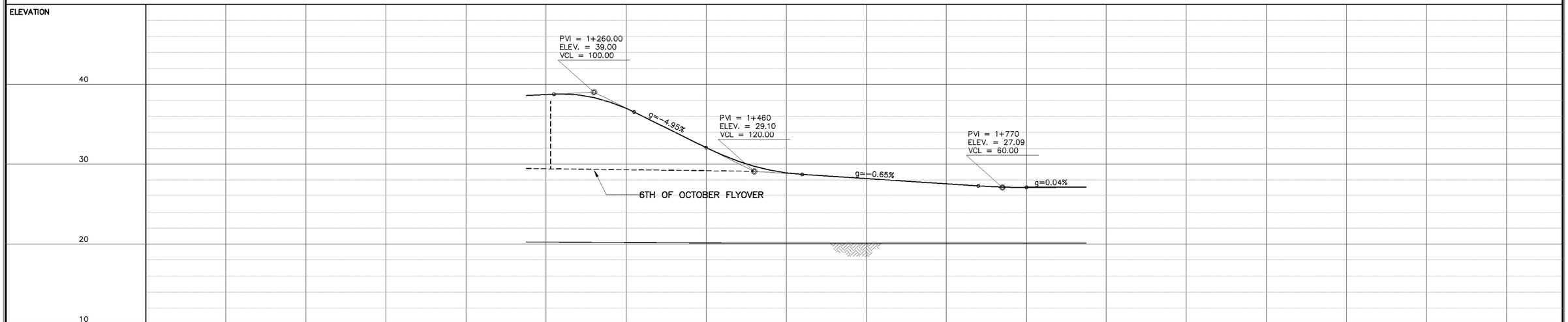

STATION	1+200	1+300	1+400	1+500	1+600	1+700	1+800
FINISHED GRADE	38.70	36.99	32.07	28.91	28.19	27.54	27.10
ORIGINAL GRADE	20.24	20.19	20.13	20.10	20.10	20.10	20.10

HORIZONTAL CURVATURE: R=∞ | A=90 | R=120 | A=90 | A=90 | R=120 | A=90

KATAHIRA & ENGINEERS INTERNATIONAL
PRICE WATERHOUSE COOPERS ADVISORY CO., LTD.

JICA
JAPAN INTERNATIONAL COOPERATION AGENCY

GENERAL AUTHORITY FOR ROADS BRIDGES AND LAND TRANSPORT (GARBLT)
MINISTRY OF TRANSPORT
ARAB REPUBLIC OF EGYPT

PROJECT AND LOCATION :
FEASIBILITY STUDY ON
HIGH PRIORITY URBAN TOLL EXPRESSWAYS IN CAIRO
E2-2

SCALE :
H = 1/5,000
V = 1/500
FULL SIZE A3

DRAWING TITLE :
E2-2
PLAN AND PROFILE
Sta. 1+200 - Sta. 1+875

DRAWING NO :
E2-2/R-02

SHEET NO :
2/5

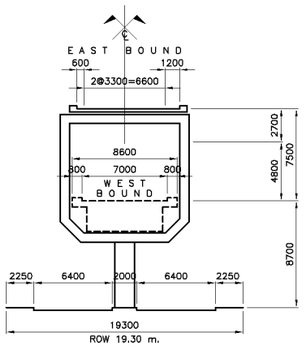

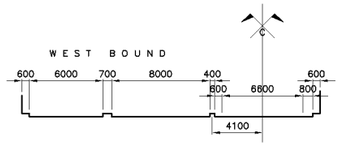

THE 6TH OF OCTOBER FLYOVER

SCALE: 1 : 500 M.

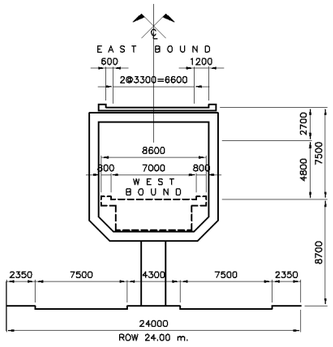

15TH MAY BRIDGE SECTION

SCALE: 1 : 500 M.

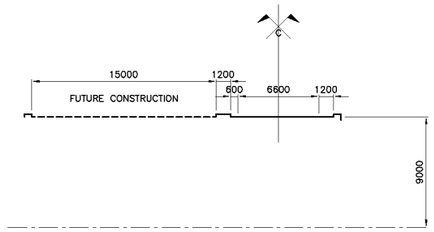

RAMSIS ST.

SCALE: 1 : 500 M.

KATAHIRA & ENGINEERS INTERNATIONAL PRICE WATERHOUSE COOPERS ADVISORY CO., LTD.	JICA JAPAN INTERNATIONAL COOPERATION AGENCY	GENERAL AUTHORITY FOR ROADS BRIDGES AND LAND TRANSPORT (GARBLT) MINISTRY OF TRANSPORT ARAB REPUBLIC OF EGYPT	PROJECT AND LOCATION : FEASIBILITY STUDY ON HIGH PRIORITY URBAN TOLL EXPRESSWAYS IN CAIRO E2-2	SCALE : AS SHOWN FULL SIZE A3	DRAWING TITLE : TYPICAL ROAD SECTION	DRAWING NO : E2-2/R-03 SHEET NO : 3 / 5

CUT			– m²
EMBANKMENT			– m²
SLOPE	CUT	LEFT	– m
		RIGHT	– m
	EMBANKMENT	LEFT	– m
		RIGHT	– m

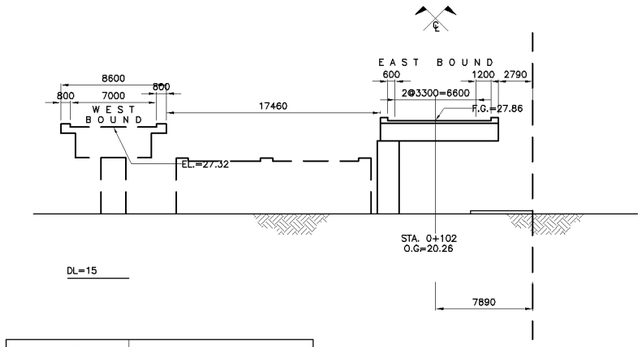

DL=15

CUT			– m²
EMBANKMENT			– m²
SLOPE	CUT	LEFT	– m
		RIGHT	– m
	EMBANKMENT	LEFT	– m
		RIGHT	– m

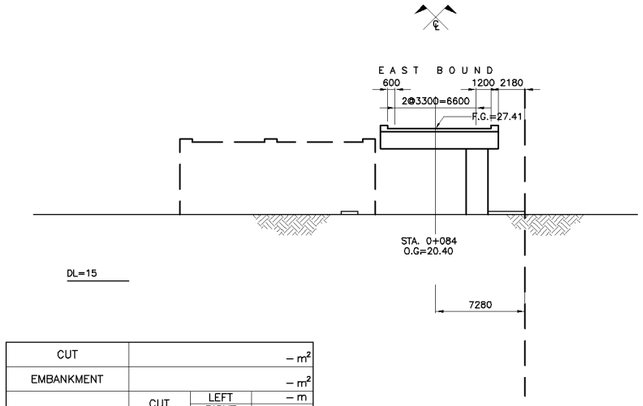

DL=15

CUT			– m²
EMBANKMENT			– m²
SLOPE	CUT	LEFT	– m
		RIGHT	– m
	EMBANKMENT	LEFT	– m
		RIGHT	– m

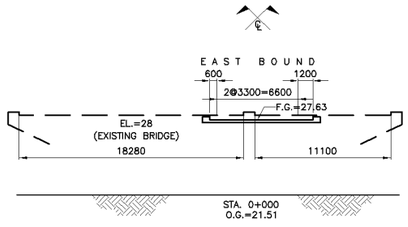

DL=25

CUT			– m²
EMBANKMENT			– m²
SLOPE	CUT	LEFT	– m
		RIGHT	– m
	EMBANKMENT	LEFT	– m
		RIGHT	– m

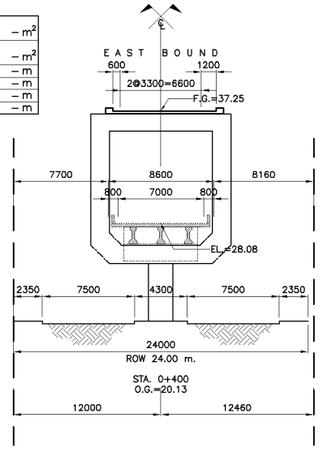

DL=15

CUT			– m²
EMBANKMENT			– m²
SLOPE	CUT	LEFT	– m
		RIGHT	– m
	EMBANKMENT	LEFT	– m
		RIGHT	– m

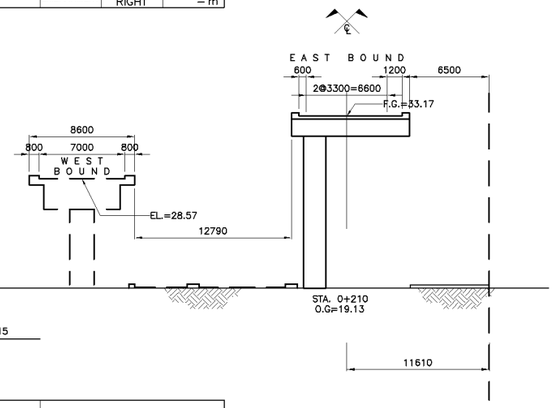

DL=15

CUT			– m²
EMBANKMENT			– m²
SLOPE	CUT	LEFT	– m
		RIGHT	– m
	EMBANKMENT	LEFT	– m
		RIGHT	– m

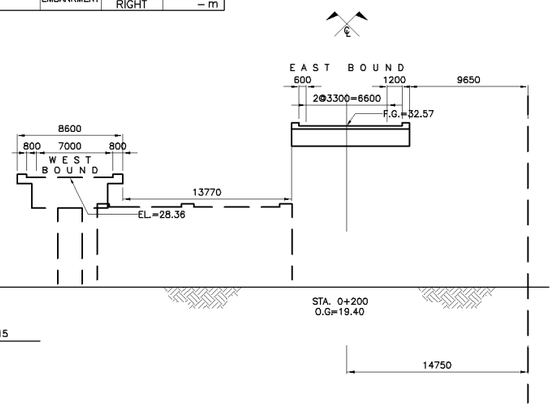

DL=15

CUT			– m²
EMBANKMENT			– m²
SLOPE	CUT	LEFT	– m
		RIGHT	– m
	EMBANKMENT	LEFT	– m
		RIGHT	– m

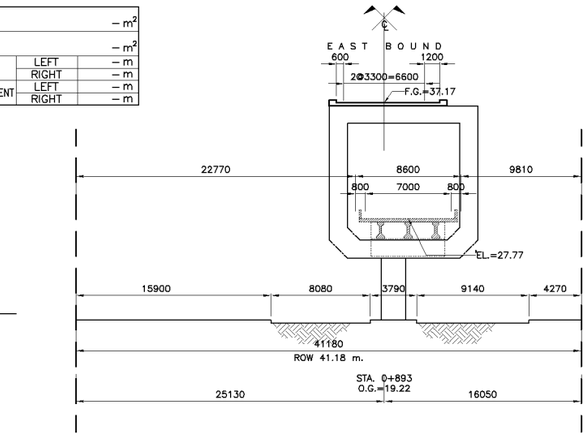

DL=20

CUT			– m²
EMBANKMENT			– m²
SLOPE	CUT	LEFT	– m
		RIGHT	– m
	EMBANKMENT	LEFT	– m
		RIGHT	– m

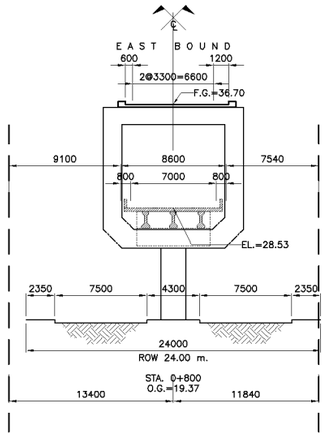

DL=15

CUT			– m²
EMBANKMENT			– m²
SLOPE	CUT	LEFT	– m
		RIGHT	– m
	EMBANKMENT	LEFT	– m
		RIGHT	– m

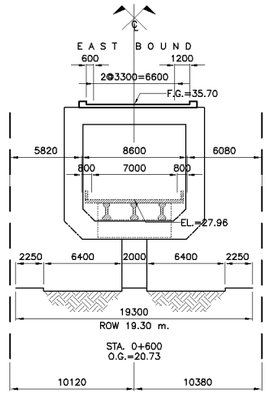

DL=20

KATAHIRA & ENGINEERS INTERNATIONAL
PRICE WATERHOUSE COOPERS ADVISORY CO., LTD.

JAPAN INTERNATIONAL COOPERATION AGENCY

GENERAL AUTHORITY FOR ROADS BRIDGES AND LAND TRANSPORT (GARBLT)
MINISTRY OF TRANSPORT
ARAB REPUBLIC OF EGYPT

PROJECT AND LOCATION :	SCALE :	DRAWING TITLE :	DRAWING NO :
FEASIBILITY STUDY ON HIGH PRIORITY URBAN TOLL EXPRESSWAYS IN CAIRO E2-2	1 : 500 FULL SIZE A3	CROSS SECTION Sta. 0+000 - Sta. 0+893	E2-2/R-04
			SHEET NO : 4 / 5

CUT			– m²
EMBANKMENT			– m²
SLOPE	CUT	LEFT	– m
		RIGHT	– m
	EMBANKMENT	LEFT	– m
		RIGHT	– m

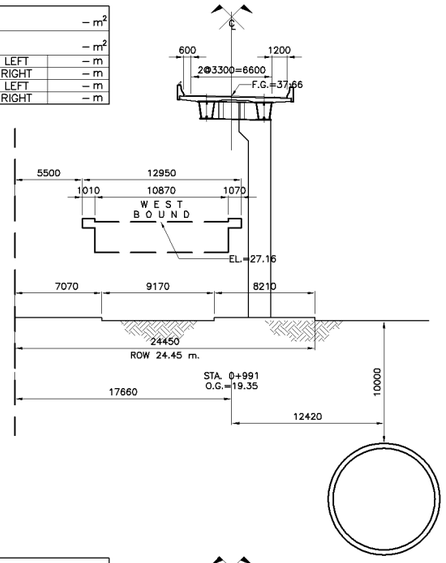

DL=20

CUT			– m²
EMBANKMENT			– m²
SLOPE	CUT	LEFT	– m
		RIGHT	– m
	EMBANKMENT	LEFT	– m
		RIGHT	– m

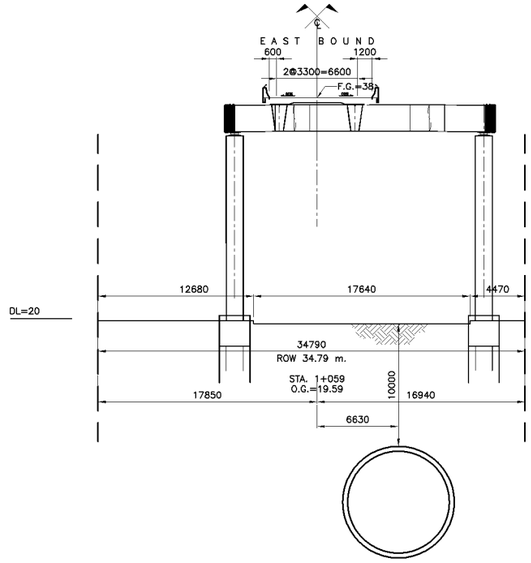

DL=20

CUT			– m²
EMBANKMENT			– m²
SLOPE	CUT	LEFT	– m
		RIGHT	– m
	EMBANKMENT	LEFT	– m
		RIGHT	– m

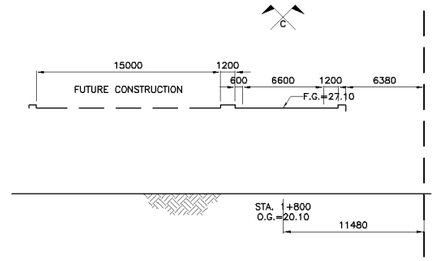

DL=20

CUT			– m²
EMBANKMENT			– m²
SLOPE	CUT	LEFT	– m
		RIGHT	– m
	EMBANKMENT	LEFT	– m
		RIGHT	– m

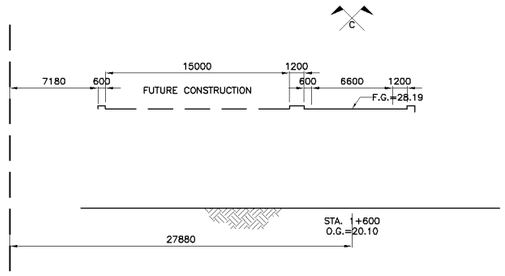

DL=20

CUT			– m²
EMBANKMENT			– m²
SLOPE	CUT	LEFT	– m
		RIGHT	– m
	EMBANKMENT	LEFT	– m
		RIGHT	– m

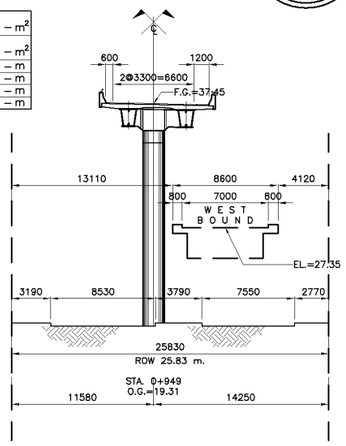

DL=20

CUT			– m²
EMBANKMENT			– m²
SLOPE	CUT	LEFT	– m
		RIGHT	– m
	EMBANKMENT	LEFT	– m
		RIGHT	– m

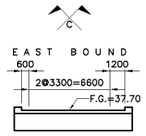

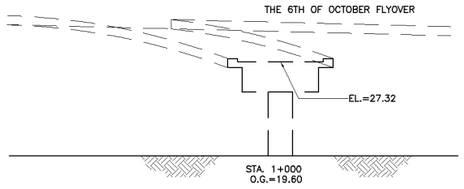

DL=20

CUT			– m²
EMBANKMENT			– m²
SLOPE	CUT	LEFT	– m
		RIGHT	– m
	EMBANKMENT	LEFT	– m
		RIGHT	– m

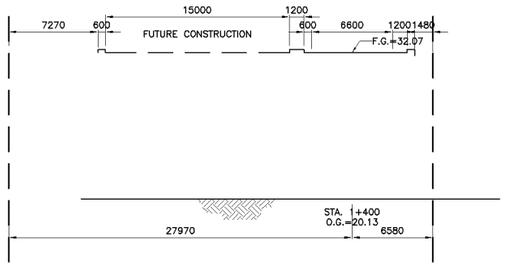

DL=20

CUT			– m²
EMBANKMENT			– m²
SLOPE	CUT	LEFT	– m
		RIGHT	– m
	EMBANKMENT	LEFT	– m
		RIGHT	– m

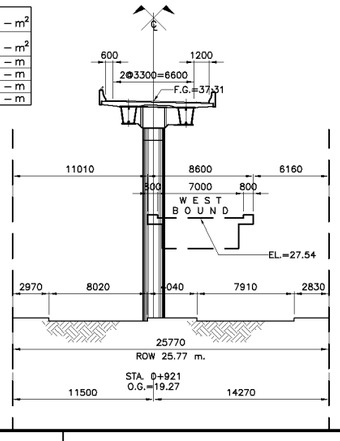

DL=20

CUT			– m²
EMBANKMENT			– m²
SLOPE	CUT	LEFT	– m
		RIGHT	– m
	EMBANKMENT	LEFT	– m
		RIGHT	– m

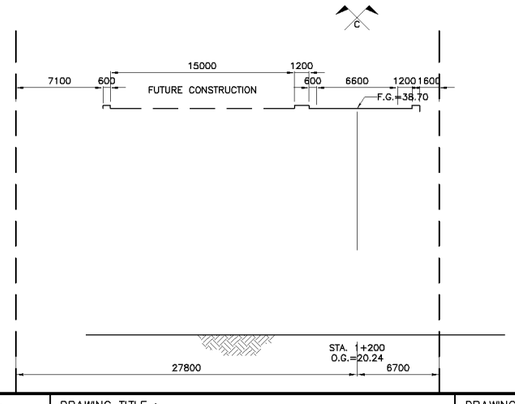

DL=20

KATAHIRA & ENGINEERS INTERNATIONAL
PRICE WATERHOUSE COOPERS ADVISORY CO., LTD.

JAPAN INTERNATIONAL COOPERATION AGENCY

GENERAL AUTHORITY FOR ROADS BRIDGES AND LAND TRANSPORT (GARBLT)
MINISTRY OF TRANSPORT
ARAB REPUBLIC OF EGYPT

PROJECT AND LOCATION :
FEASIBILITY STUDY ON
HIGH PRIORITY URBAN TOLL EXPRESSWAYS IN CAIRO
E2-2

SCALE : 1 : 500
FULL SIZE A3

DRAWING TITLE :
CROSS SECTION
Sta. 0+921 - Sta. 1+800

DRAWING NO : E2-2/R-05
SHEET NO : 5 / 5

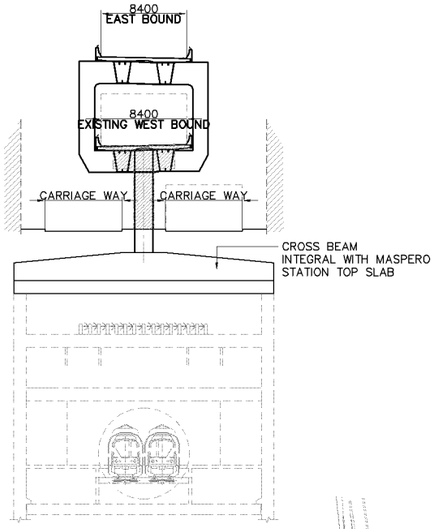

2 SCALE **SECTION** 1:600

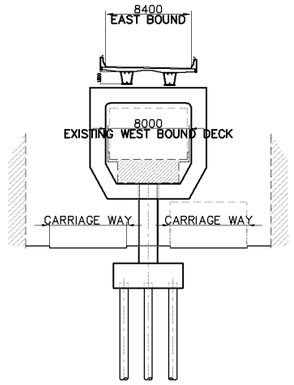

3 SCALE **SECTION** 1:600

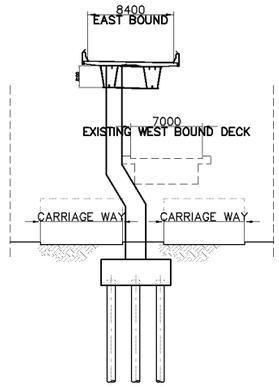

4 SCALE **SECTION** 1:600

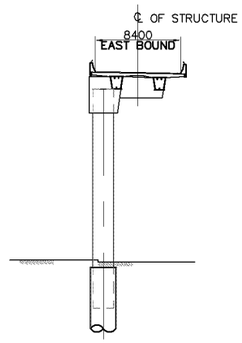

5 SCALE **SECTION** 1:600

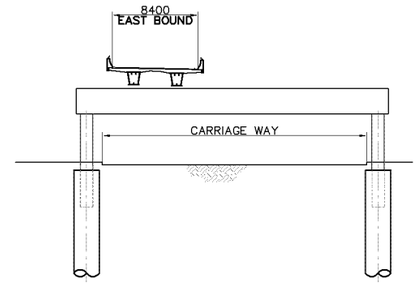

6 SCALE **SECTION** 1:600

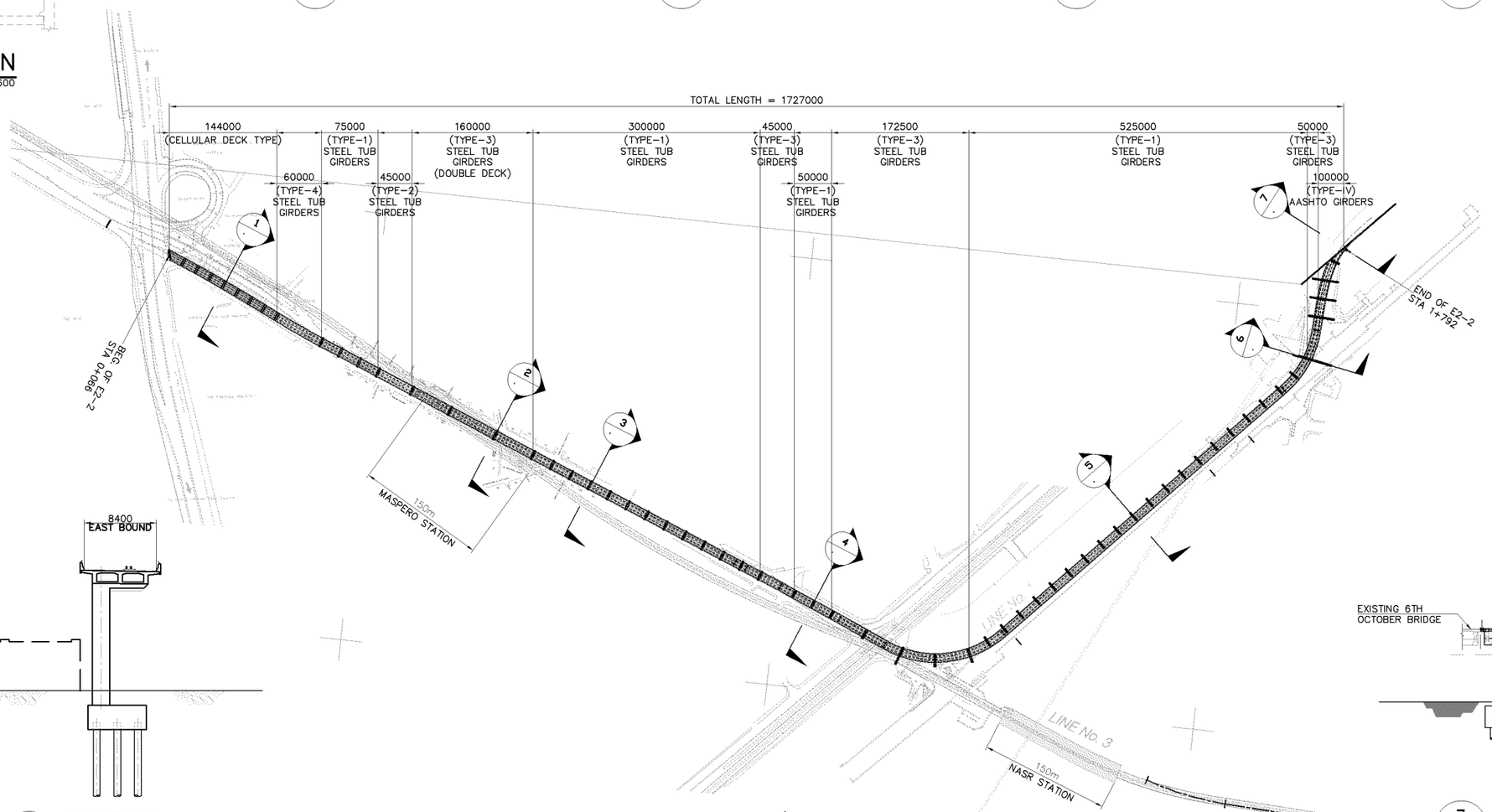

A SCALE **PLAN AND LAYOUT** 1:6000

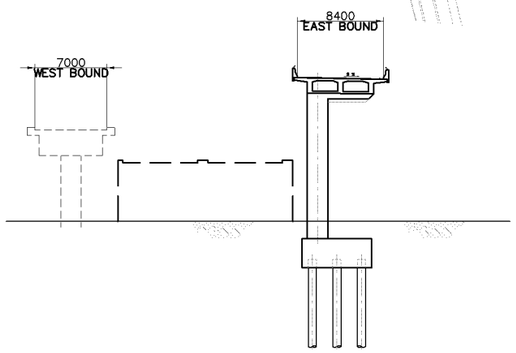

1 SCALE **SECTION** 1:600

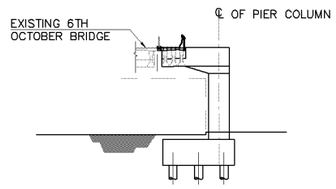

7 SCALE **SECTION** 1:600

KATAHIRA & ENGINEERS INTERNATIONAL PRICE WATERHOUSE COOPERS ADVISORY CO., LTD.	JICA JAPAN INTERNATIONAL COOPERATION AGENCY	GENERAL AUTHORITY FOR ROADS BRIDGES AND LAND TRANSPORT (GARBLT) MINISTRY OF TRANSPORT ARAB REPUBLIC OF EGYPT	PROJECT AND LOCATION : FEASIBILITY STUDY ON HIGH PRIORITY URBAN TOLL EXPRESSWAYS IN CAIRO E2-2	SCALE : 1:6000 1:600 FULL SIZE A3	DRAWING TITLE : E2-2 OVERALL PLAN AND LAYOUT	DRAWING NO : E2-2/S-01 SHEET NO : 1 / 23

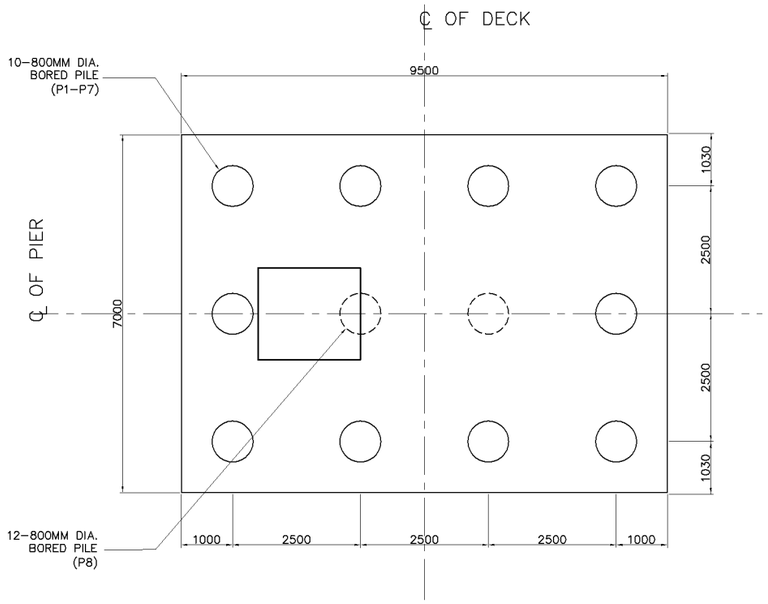

4 SCALE **PILE CAP SECTION** 1:120

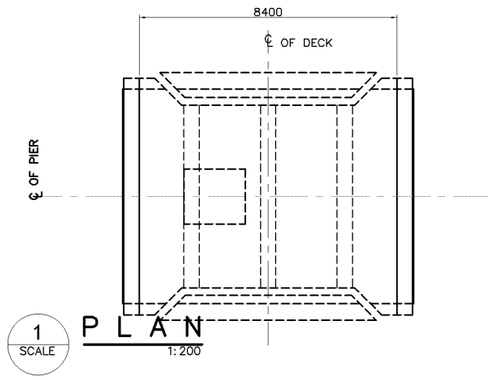

1 SCALE **PLAN** 1:200

SUMMARY OF QUANTITIES - 8 PIERS (P1-P8)

DESCRIPTION	UNIT	QUANTITIES		
		FOUNDATION	PIER	TOTAL
EARTH WORKS				
STRUCTURE EXCAVATION	CU.M.	2450		2450
FOUNDATION FILL	CU.M.	1240		1240
STRUCTURE BACK FILL	CU.M.			
STRUCTURE WORKS				
CAST IN PLACE BORED PILE (800mmø)	M.	1640		1640
PILE LOAD TEST-STATIC (800MM DIA.)	No.	8		8
STRUCTURAL CONCRETE Fcu=450 kg/cm2	CU.M.		410	410
STRUCTURAL CONCRETE Fcu=300 kg/cm2	CU.M.	1210		1210
REINFORCING BARS	M.T.	245	115	360
PRESTRESS CABLE	M.T.		20	20

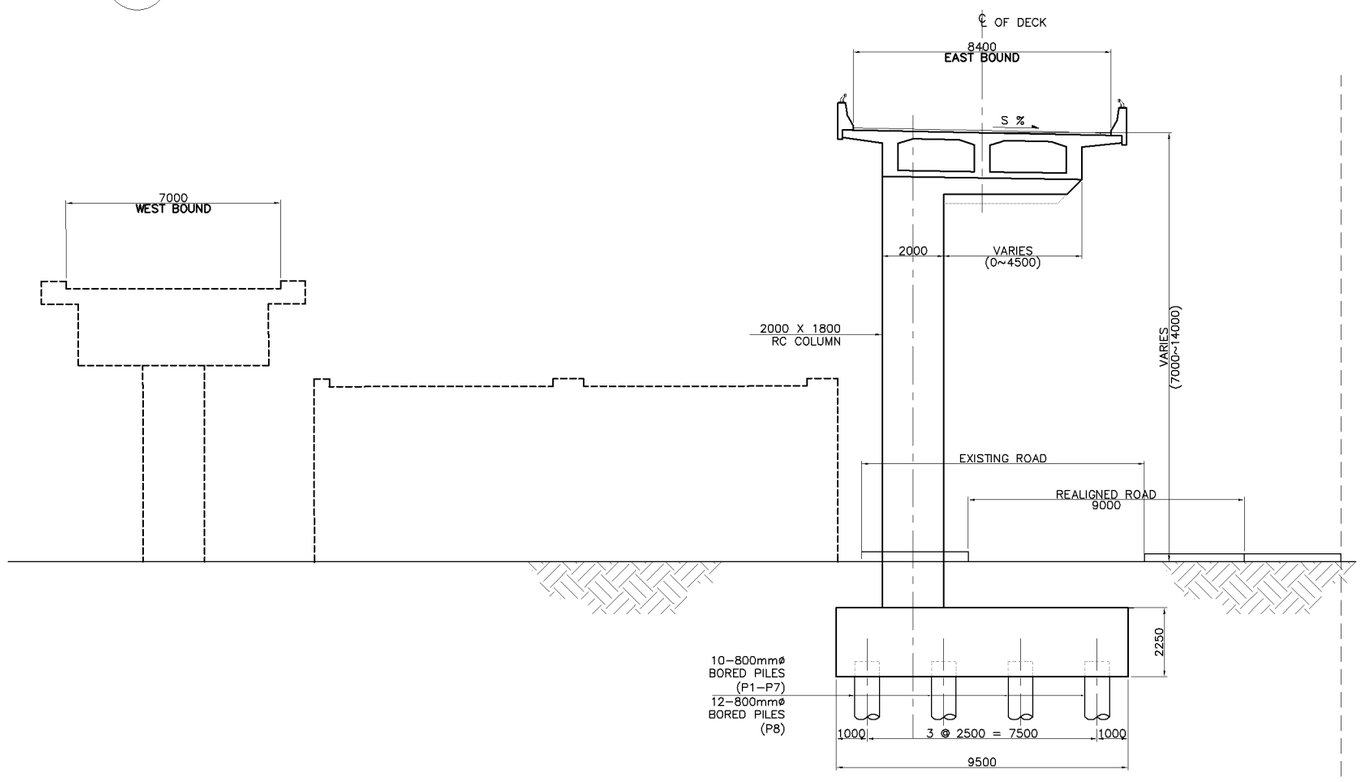

2 SCALE **RC SINGLE COLUMN PIER ELEVATION** 1:200

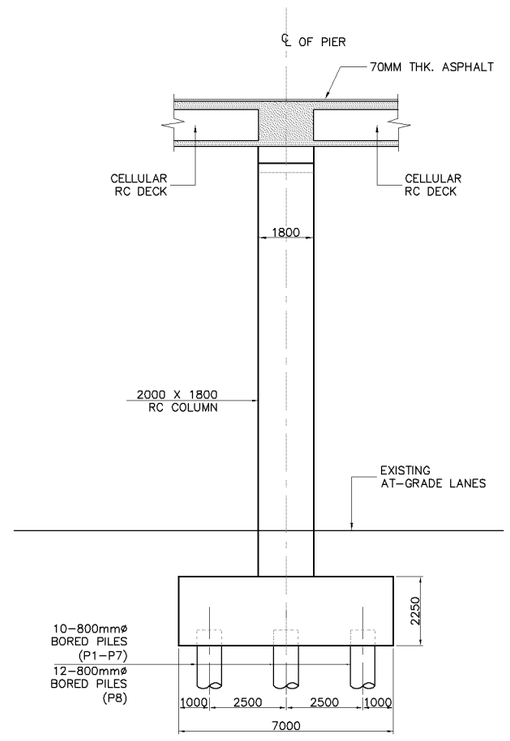

3 SCALE **SIDE ELEVATION** 1:200

KATAHIRA & ENGINEERS INTERNATIONAL PRICE WATERHOUSE COOPERS ADVISORY CO., LTD.	JICA JAPAN INTERNATIONAL COOPERATION AGENCY	GENERAL AUTHORITY FOR ROADS BRIDGES AND LAND TRANSPORT (GARBLT) MINISTRY OF TRANSPORT ARAB REPUBLIC OF EGYPT	PROJECT AND LOCATION : FEASIBILITY STUDY ON HIGH PRIORITY URBAN TOLL EXPRESSWAYS IN CAIRO E2-2 EXPRESSWAY	SCALE : 1:120 1:200 FULL SIZE A3	DRAWING TITLE : RC SINGLE COLUMN PIER SINGLE CELLULAR RC DECK	DRAWING NO : E2-2/S-02 SHEET NO : 2 / 23

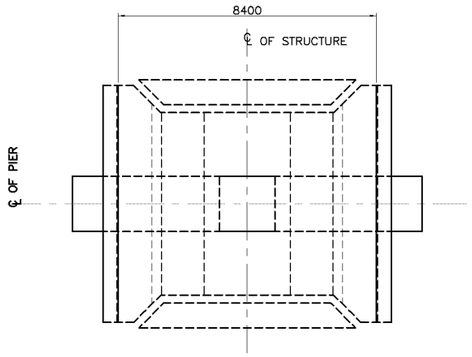

1 SCALE **PLAN** 1:200

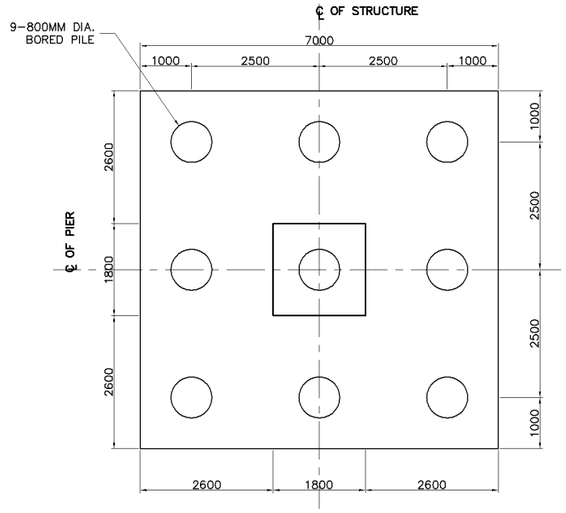

6 SCALE **PILE CAP SECTION** 1:120

SUMMARY OF QUANTITIES - 13 PIERS (P10, P11, P17 - P27)

DESCRIPTION	UNIT	QUANTITIES		
		FOUNDATION	PIER	TOTAL
EARTH WORKS				
STRUCTURE EXCAVATION	CU.M.	2920		2920
FOUNDATION FILL	CU.M.	580		580
STRUCTURE BACK FILL	CU.M.			
STRUCTURE WORKS				
CAST IN PLACE BORED PILE (800mmø)	M.	2340		2340
PILE LOAD TEST-STATIC (800MM DIA.)	No.	13		13
STRUCTURAL CONCRETE Fcu=450 kg/cm2	CU.M.			
STRUCTURAL CONCRETE Fcu=300 kg/cm2	CU.M.	1435		1435
REINFORCING BARS	M.T.		285	285
STRUCTURAL STEEL	M.T.		1170	1170

NOTE:

STRUCTURAL STEEL GRADE :: UPPER FRAME SM400 (JIS G3114)
: LOWER FRAME SM520 (JIS G3114)

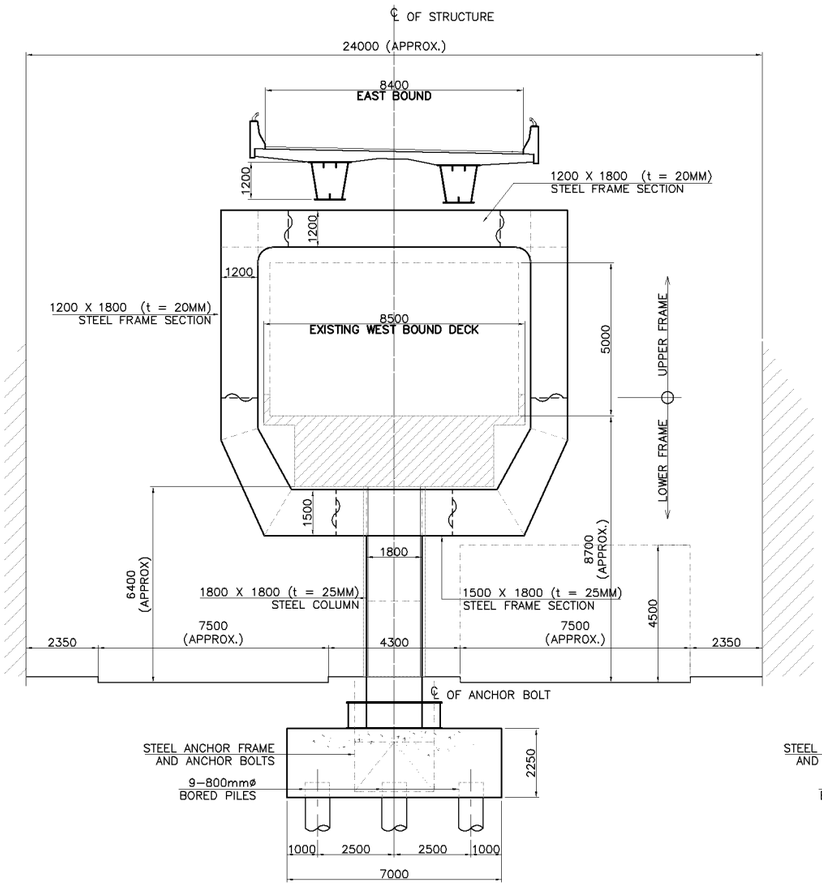

2 SCALE **STEEL FRAME PIER ELEVATION (2 PIERS)** 1:200

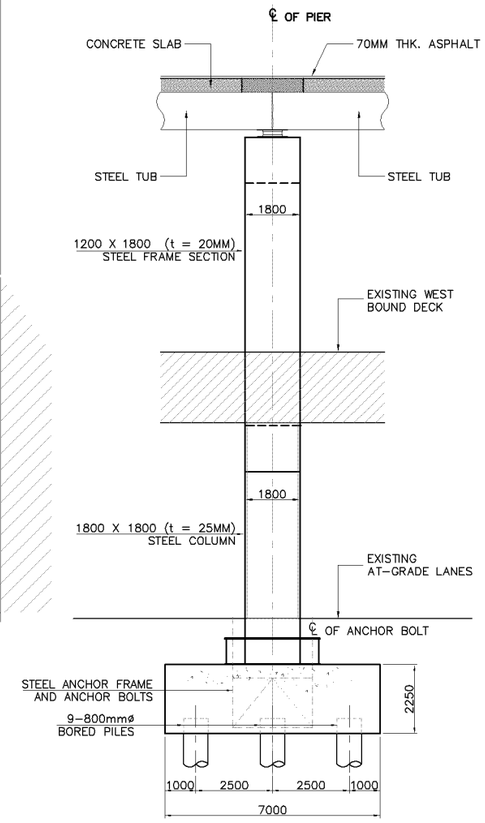

3 SCALE **SIDE ELEVATION** 1:200

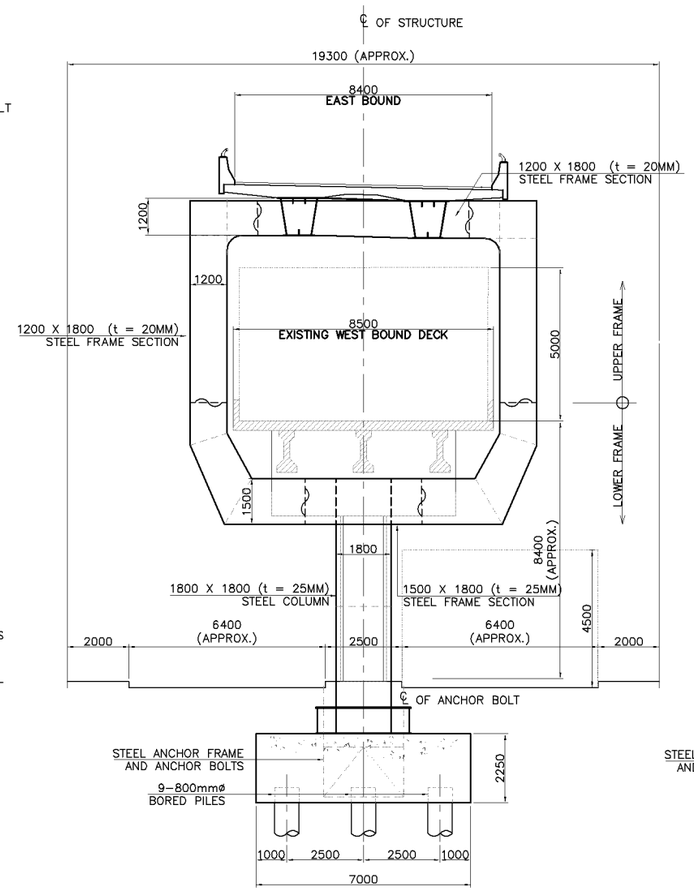

4 SCALE **STEEL FRAME PIER ELEVATION (11 PIERS)** 1:200

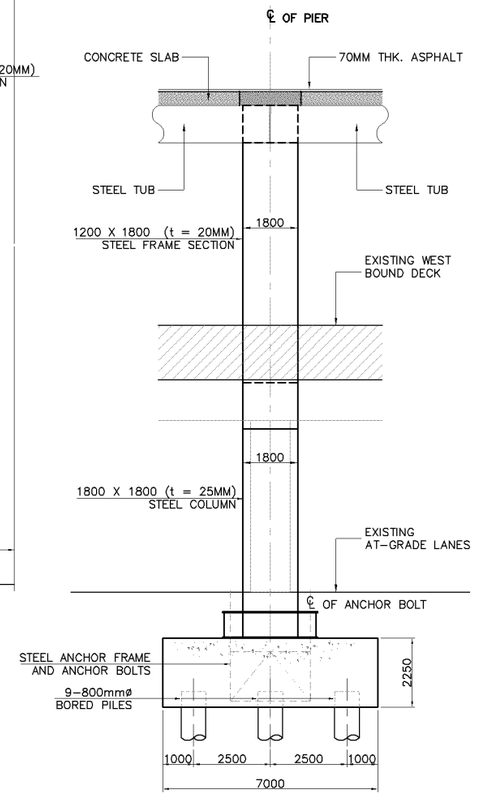

5 SCALE **SIDE ELEVATION** 1:200

KATAHIRA & ENGINEERS INTERNATIONAL PRICE WATERHOUSE COOPERS ADVISORY CO., LTD.	JICA JAPAN INTERNATIONAL COOPERATION AGENCY	GENERAL AUTHORITY FOR ROADS BRIDGES AND LAND TRANSPORT (GARBLT) MINISTRY OF TRANSPORT ARAB REPUBLIC OF EGYPT	PROJECT AND LOCATION : FEASIBILITY STUDY ON HIGH PRIORITY URBAN TOLL EXPRESSWAYS IN CAIRO E2-2 EXPRESSWAY	SCALE : 1:200 1:120 FULL SIZE A3	DRAWING TITLE : STEEL FRAME PIER TYPE-1 (25.00m) SINGLE DECK	DRAWING NO : E2-2/S-03 SHEET NO : 3 / 23

SUMMARY OF QUANTITIES - 3 PIERS (P12, P28 & P29)

DESCRIPTION	UNIT	QUANTITIES		
		FOUNDATION	PIER	TOTAL
EARTH WORKS				
STRUCTURE EXCAVATION	CU.M.	830		830
FOUNDATION FILL	CU.M.	110		110
STRUCTURE BACK FILL	CU.M.			
STRUCTURE WORKS				
CAST IN PLACE BORED PILE (800mmø)	M.	720		720
PILE LOAD TEST–STATIC (800MM DIA.)	No.	3		3
STRUCTURAL CONCRETE Fcu=450 kg/cm2	CU.M.			
STRUCTURAL CONCRETE Fcu=300 kg/cm2	CU.M.	460		460
REINFORCING BARS	M.T.	100		100
STRUCTURAL STEEL	M.T.		330	330

NOTE:

STRUCTURAL STEEL GRADE : UPPER FRAME SM400 (JIS G3114)
: LOWER FRAME SM520 (JIS G3114)

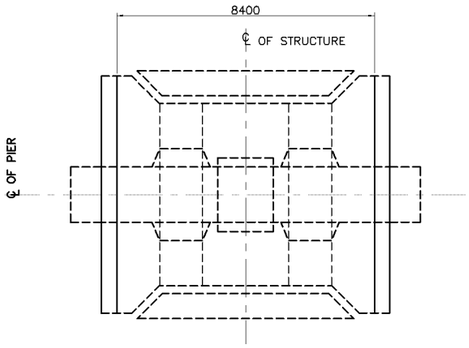

1 SCALE **PLAN** 1:200

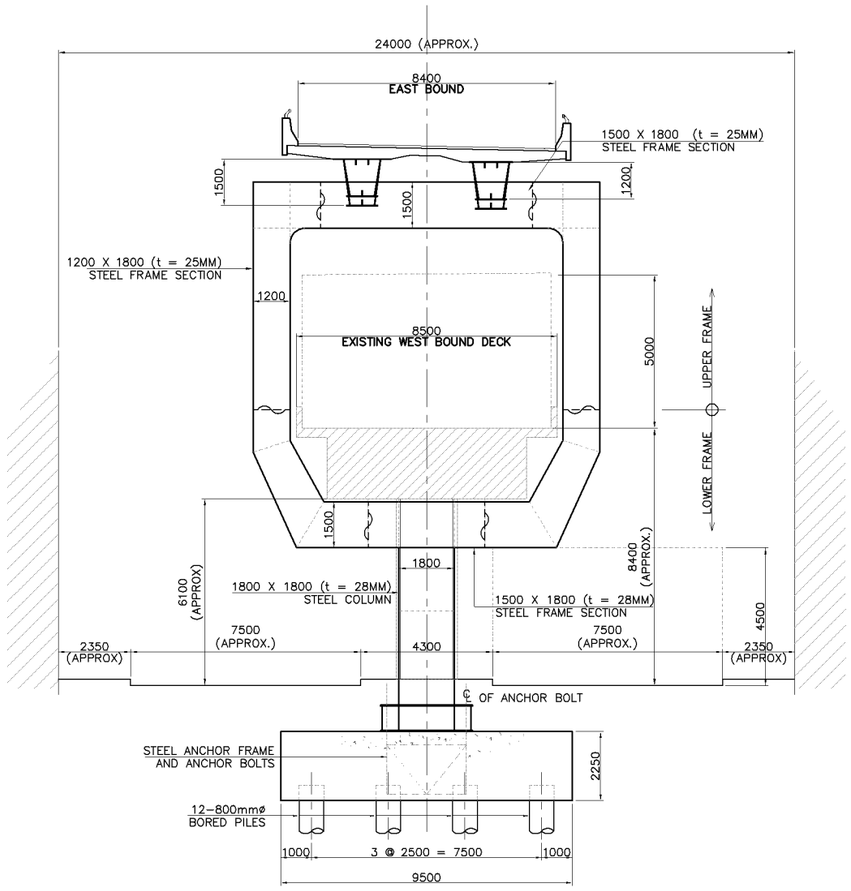

2 SCALE **STEEL FRAME PIER ELEVATION (EXPANSION)** 1:200

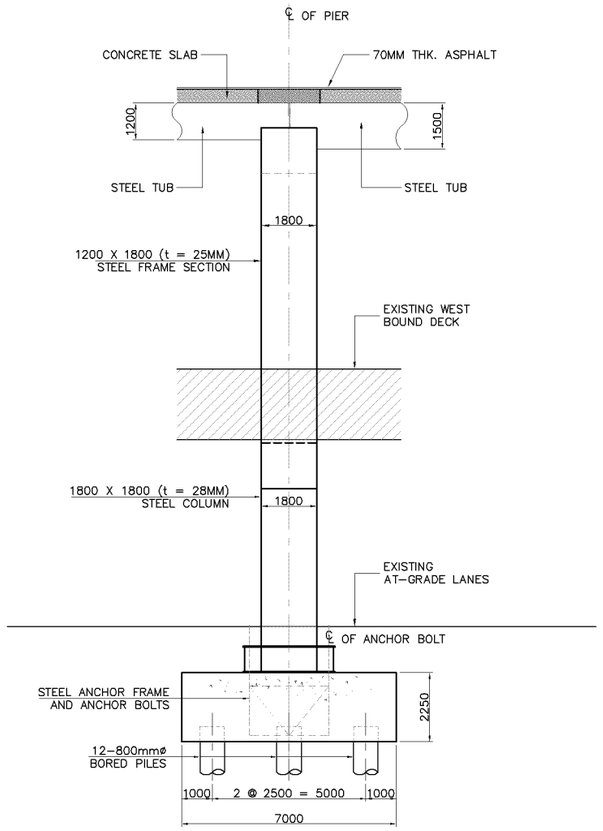

3 SCALE **SIDE ELEVATION** 1:200

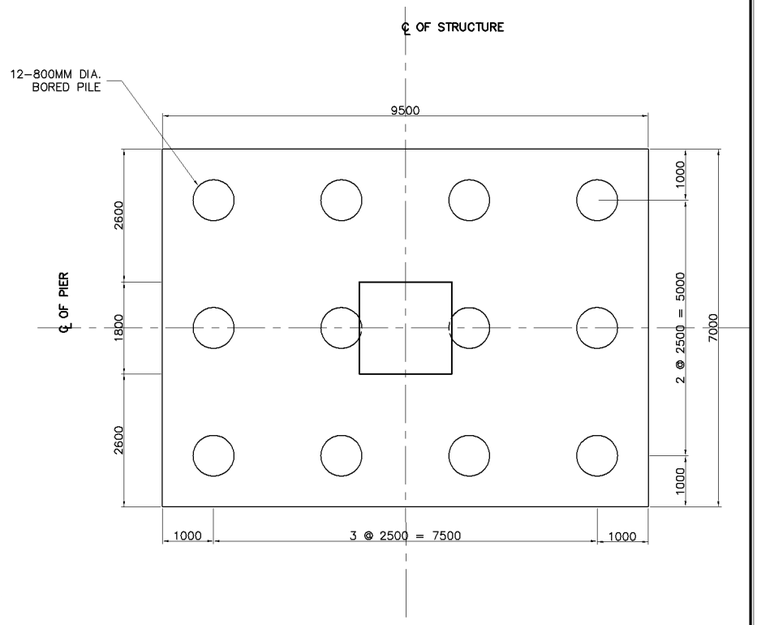

4 SCALE **PILE CAP SECTION** 1:120

KATAHIRA & ENGINEERS INTERNATIONAL PRICE WATERHOUSE COOPERS ADVISORY CO., LTD.	JICA JAPAN INTERNATIONAL COOPERATION AGENCY	GENERAL AUTHORITY FOR ROADS BRIDGES AND LAND TRANSPORT (GARBLT) MINISTRY OF TRANSPORT ARAB REPUBLIC OF EGYPT	PROJECT AND LOCATION : FEASIBILITY STUDY ON HIGH PRIORITY URBAN TOLL EXPRESSWAYS IN CAIRO E2-2 EXPRESSWAY	SCALE : 1:120 1:200 FULL SIZE A3
DRAWING TITLE : STEEL FRAME PIER TYPE 2 (40m) SINGLE DECK	DRAWING NO : E2-2/S-04 SHEET NO : 4 / 23			

SUMMARY OF QUANTITIES - 1 PIER (P9)

DESCRIPTION	UNIT	QUANTITIES		
		FOUNDATION	PIER	TOTAL
EARTH WORKS				
STRUCTURE EXCAVATION	CU.M.	365		365
FOUNDATION FILL	CU.M.	155		155
STRUCTURE BACK FILL	CU.M.			
STRUCTURE WORKS				
CAST IN PLACE BORED PILE (800mmø)	M.	240		240
PILE LOAD TEST-STATIC (800MM DIA.)	No.	1		1
STRUCTURAL CONCRETE Fcu=450 kg/cm2	CU.M.			
STRUCTURAL CONCRETE Fcu=300 kg/cm2	CU.M.	150		150
REINFORCING BARS	M.T.	30		30
STRUCTURAL STEEL	M.T.		125	125

NOTE:

STRUCTURAL STEEL GRADE : UPPER FRAME SM400 (JIS G3114)
: LOWER FRAME SM520 (JIS G3114)

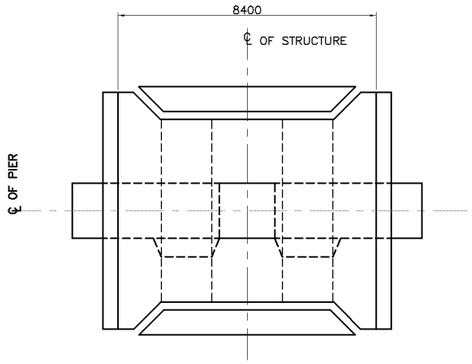

1 SCALE **PLAN** 1:200

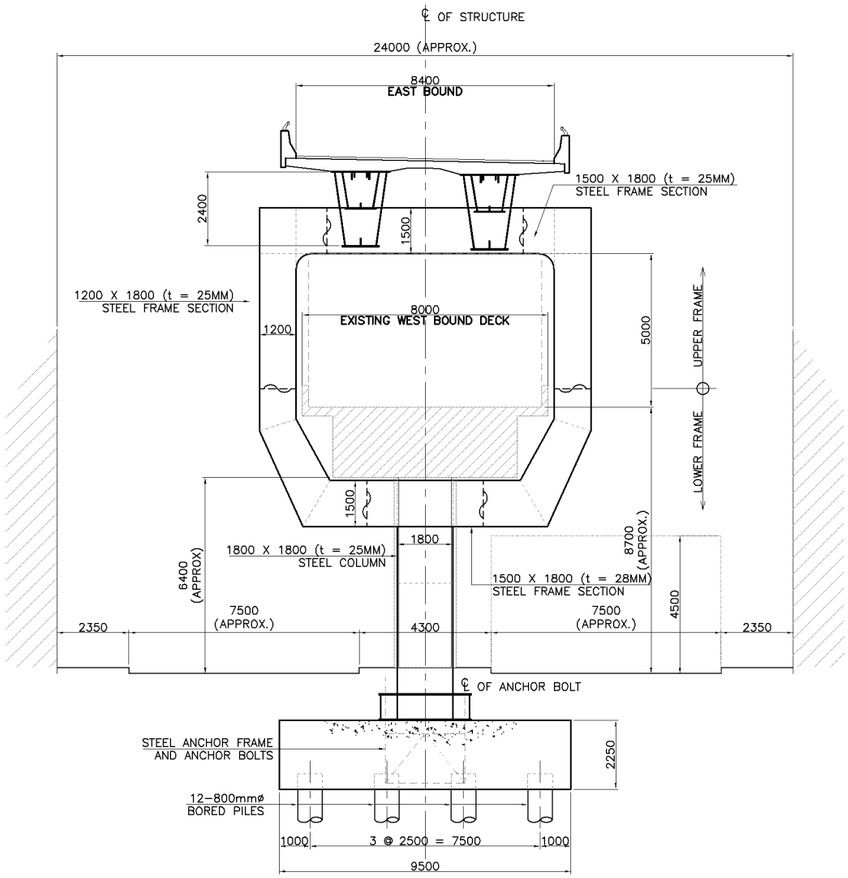

2 SCALE **STEEL FRAME PIER ELEVATION (EXPANSION)** 1:200

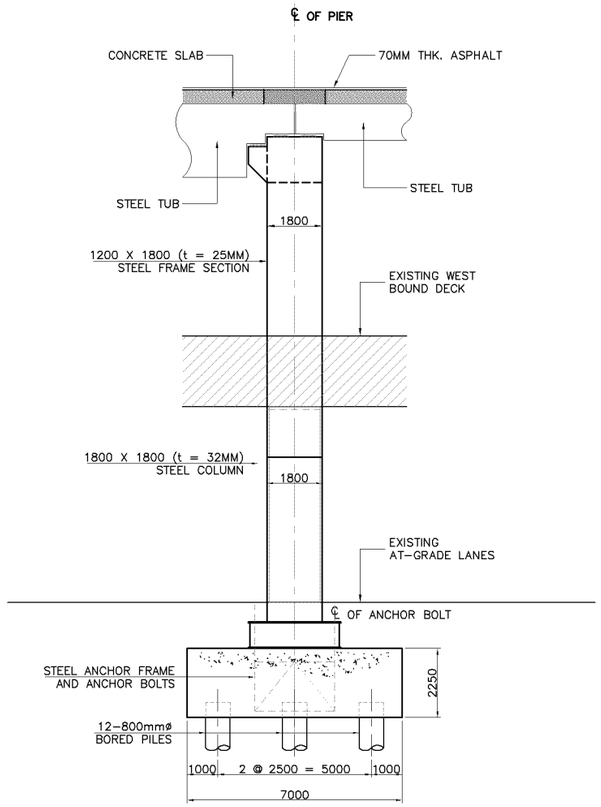

3 SCALE **SIDE ELEVATION** 1:200

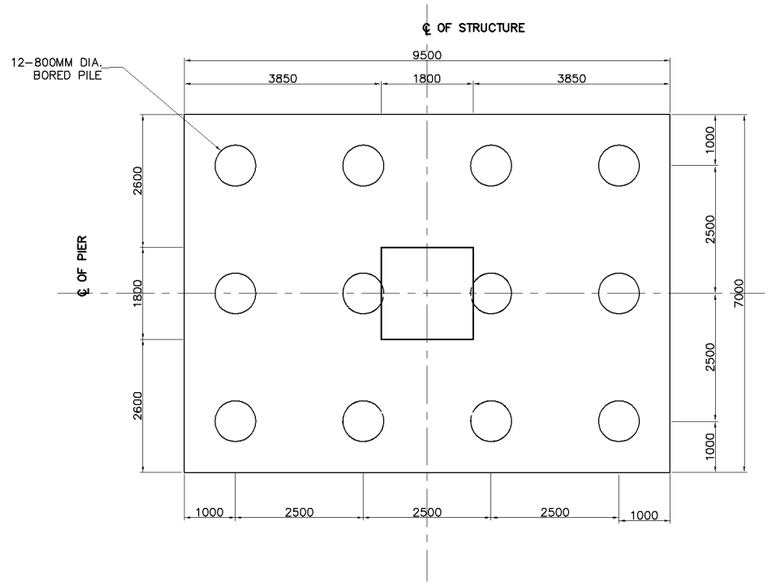

4 SCALE **PILE CAP SECTION** 1:120

KATAHIRA & ENGINEERS INTERNATIONAL PRICE WATERHOUSE COOPERS ADVISORY CO., LTD.	JICA JAPAN INTERNATIONAL COOPERATION AGENCY	GENERAL AUTHORITY FOR ROADS BRIDGES AND LAND TRANSPORT (GARBLT) MINISTRY OF TRANSPORT ARAB REPUBLIC OF EGYPT	PROJECT AND LOCATION : FEASIBILITY STUDY ON HIGH PRIORITY URBAN TOLL EXPRESSWAYS IN CAIRO E2-2 EXPRESSWAY	SCALE : 1:120 1:200 FULL SIZE A3	DRAWING TITLE : STEEL FRAME PIER TYPE 3 (60m) SINGLE DECK	DRAWING NO : E2-2/S-05 SHEET NO : 5 / 23

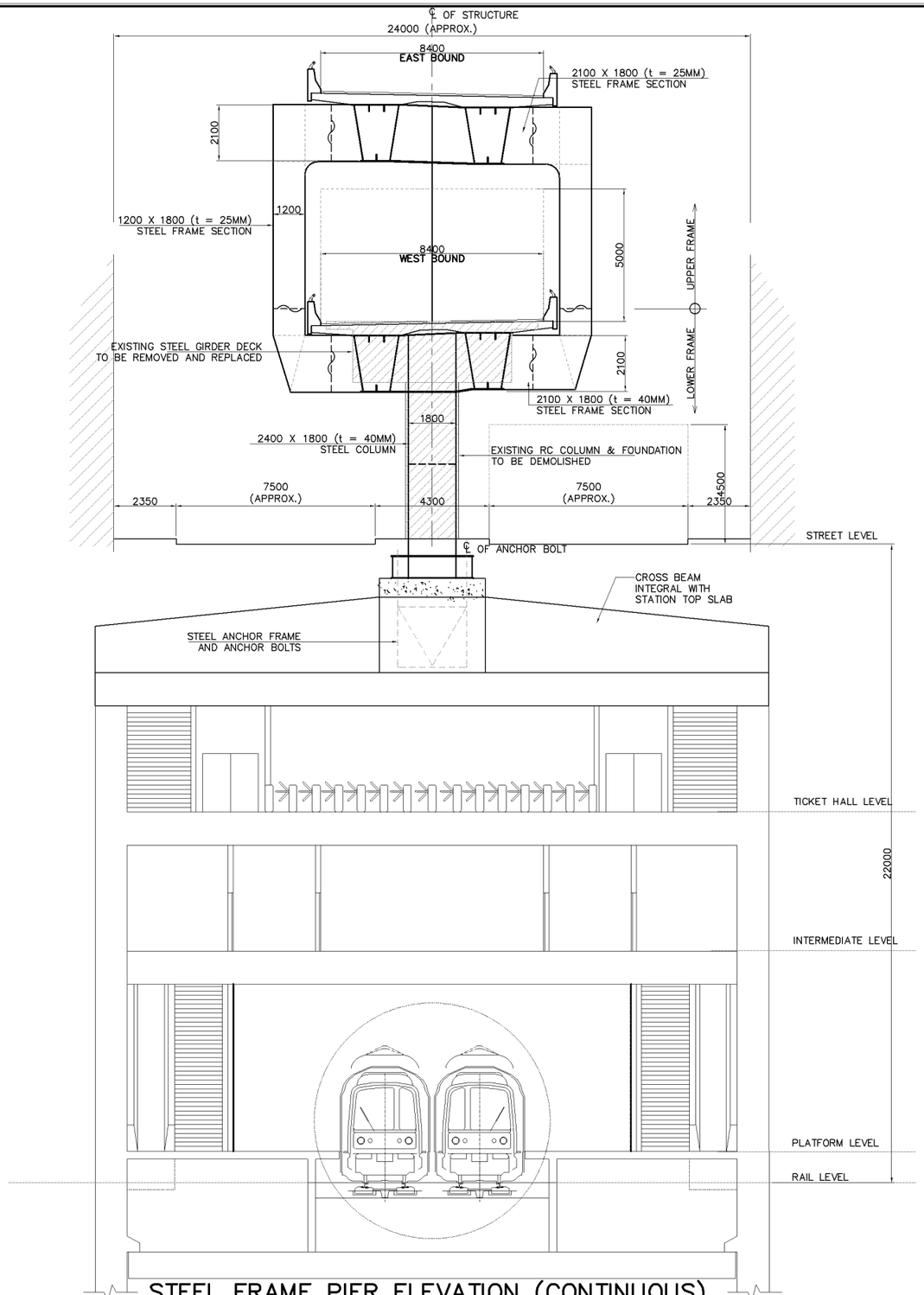

2 SCALE

STEEL FRAME PIER ELEVATION (CONTINUOUS) AT PROPOSED MASPERO STATION

1:200

SUMMARY OF QUANTITIES - 2 PIERS (P14 & P15)

DESCRIPTION	UNIT	QUANTITIES		
		FOUNDATION	PIER	TOTAL
EARTH WORKS				
STRUCTURE EXCAVATION	CU.M.			
FOUNDATION FILL	CU.M.			
STRUCTURE BACK FILL	CU.M.			
STRUCTURE WORKS				
CAST IN PLACE BORED PILE (1500mmø)	M.			
PILE LOAD TEST-STATIC (1500mMø)	No.			
STRUCTURAL CONCRETE Fcu=450 kg/cm2	CU.M.			
STRUCTURAL CONCRETE Fcu=300 kg/cm2	CU.M.			
REINFORCING BARS	M.T.			
STRUCTURAL STEEL	M.T.		290	290

NOTE:

STRUCTURAL STEEL GRADE : UPPER FRAME SM400 (JIS G3114)
: LOWER FRAME SM520 (JIS G3114)

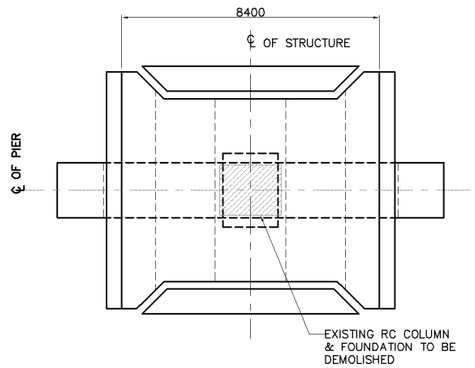

1 SCALE

PLAN

1:200

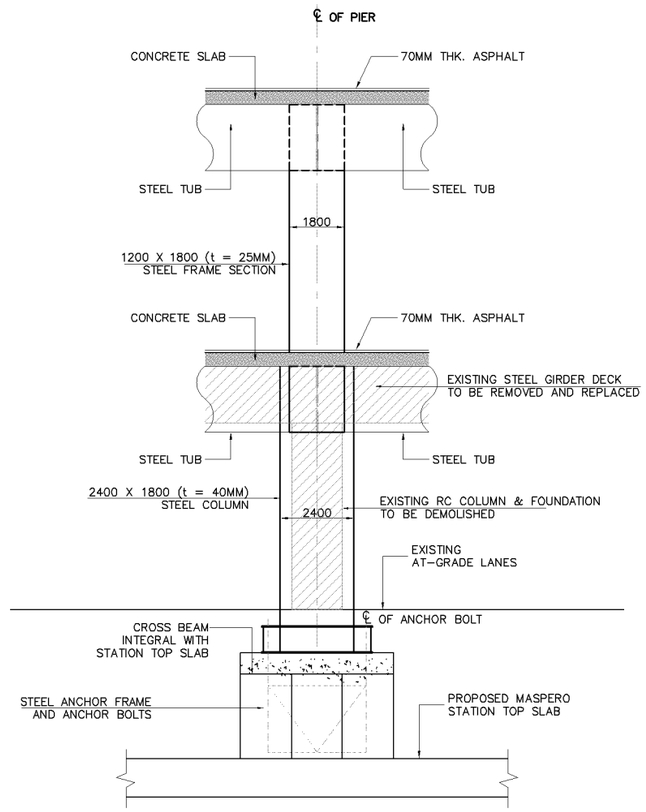

3 SCALE

SIDE ELEVATION (CONT.)

1:200

KATAHIRA & ENGINEERS INTERNATIONAL PRICE WATERHOUSE COOPERS ADVISORY CO., LTD.	JICA JAPAN INTERNATIONAL COOPERATION AGENCY	GENERAL AUTHORITY FOR ROADS BRIDGES AND LAND TRANSPORT (GARBLT) MINISTRY OF TRANSPORT ARAB REPUBLIC OF EGYPT	PROJECT AND LOCATION : FEASIBILITY STUDY ON HIGH PRIORITY URBAN TOLL EXPRESSWAYS IN CAIRO E2-2 EXPRESSWAY	SCALE : 1:200 FULL SIZE A3	DRAWING TITLE : STEEL FRAME PIER TYPE 4 (60m) DOUBLE DECK	DRAWING NO : E2-2/S-06 SHEET NO : 6 / 23

SUMMARY OF QUANTITIES - 2 PIERS (P13 & P16)

DESCRIPTION	UNIT	QUANTITIES		
		FOUNDATION	PIER	TOTAL
EARTH WORKS				
STRUCTURE EXCAVATION	CU.M.	670		670
FOUNDATION FILL	CU.M.	315		315
STRUCTURE BACK FILL	CU.M.			
STRUCTURE WORKS				
CAST IN PLACE BORED PILE (1500mmø)	M.	240		240
PILE LOAD TEST-STATIC (1500mMø)	No.	2		2
STRUCTURAL CONCRETE Fcu=450 kg/cm2	CU.M.			
STRUCTURAL CONCRETE Fcu=300 kg/cm2	CU.M.	555		555
REINFORCING BARS	M.T.	110		110
STRUCTURAL STEEL	M.T.		260	260

NOTE:

STRUCTURAL STEEL GRADE : UPPER FRAME SM400 (JIS G3114)
: LOWER FRAME SM520 (JIS G3114)

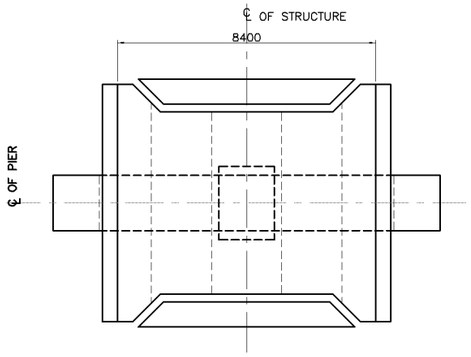

1 SCALE **PLAN** 1:200

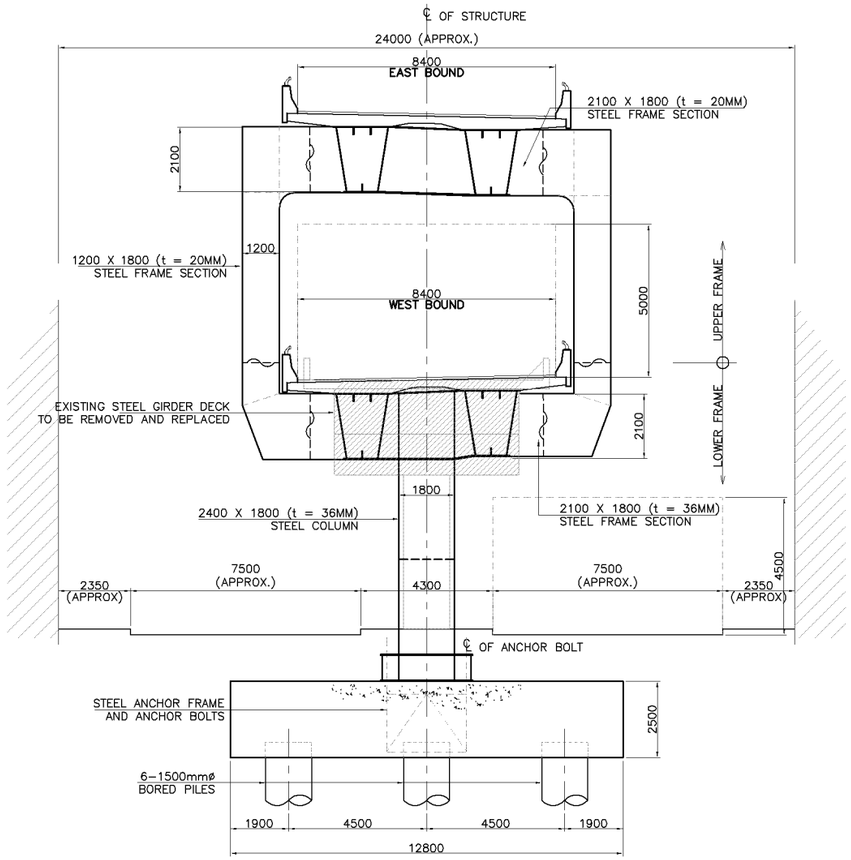

2 SCALE **STEEL FRAME PIER ELEVATION (EXP)** 1:200

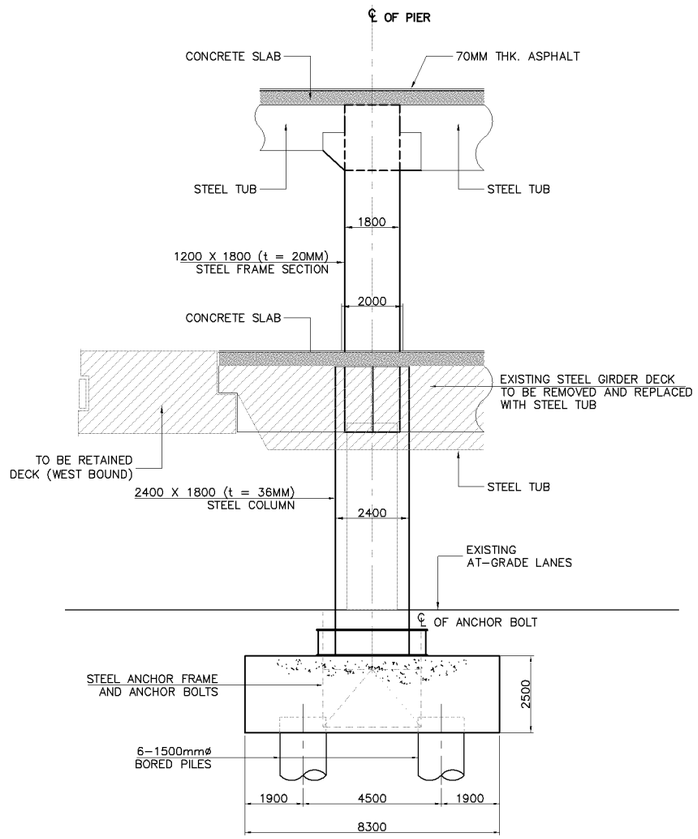

3 SCALE **SIDE ELEVATION (EXP.)** 1:200

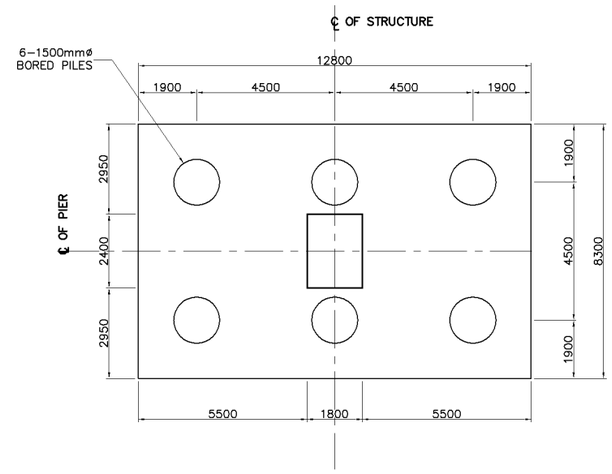

4 SCALE **PILE CAP SECTION** 1:200

KATAHIRA & ENGINEERS INTERNATIONAL PRICE WATERHOUSE COOPERS ADVISORY CO., LTD.	JICA JAPAN INTERNATIONAL COOPERATION AGENCY	GENERAL AUTHORITY FOR ROADS BRIDGES AND LAND TRANSPORT (GARBLT) MINISTRY OF TRANSPORT ARAB REPUBLIC OF EGYPT	PROJECT AND LOCATION : FEASIBILITY STUDY ON HIGH PRIORITY URBAN TOLL EXPRESSWAYS IN CAIRO E2-2 EXPRESSWAY	SCALE : 1:200 FULL SIZE A3	DRAWING TITLE : STEEL FRAME PIER TYPE 5 (50m) DOUBLE DECK	DRAWING NO : E2-2/S-07 SHEET NO : 7 / 23

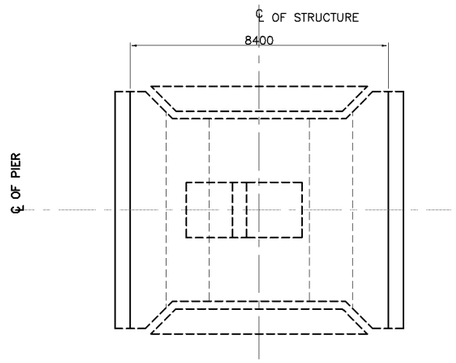

1 SCALE **PLAN** 1:200

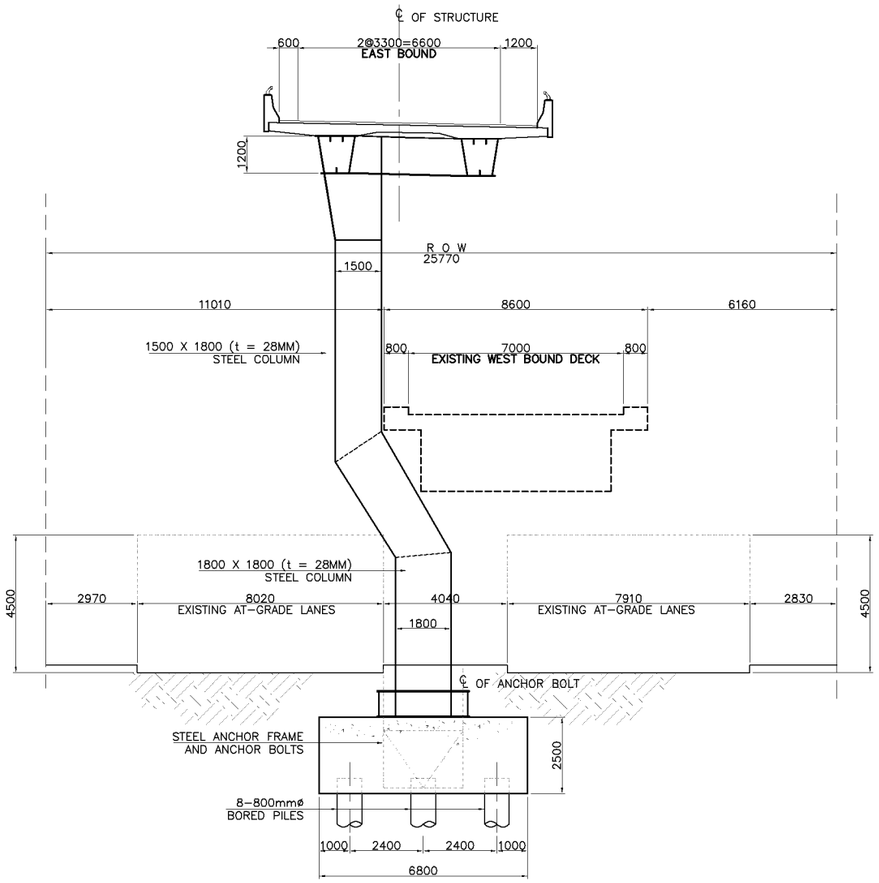

2 SCALE **STEEL ASYMMETRICAL PIER ELEVATION (CONT.)** 1:200

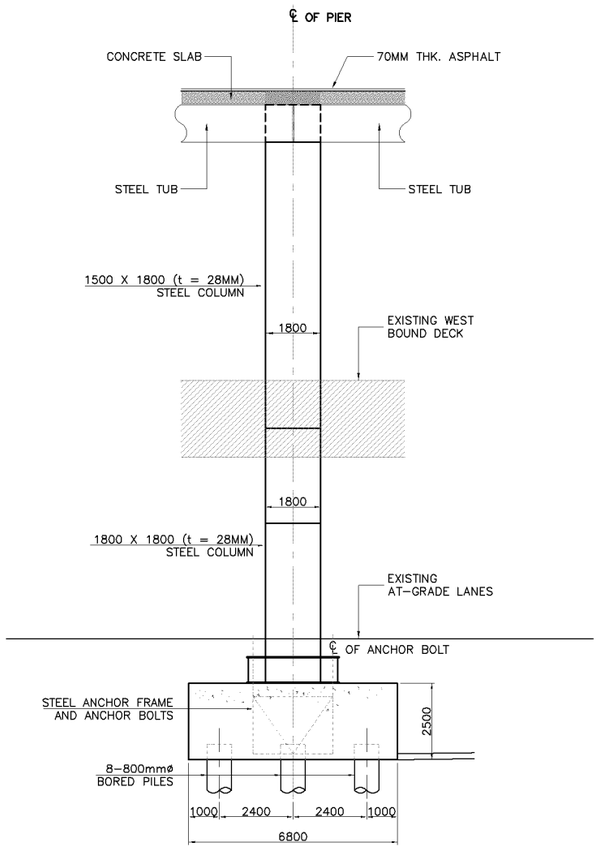

3 SCALE **SIDE ELEVATION** 1:200

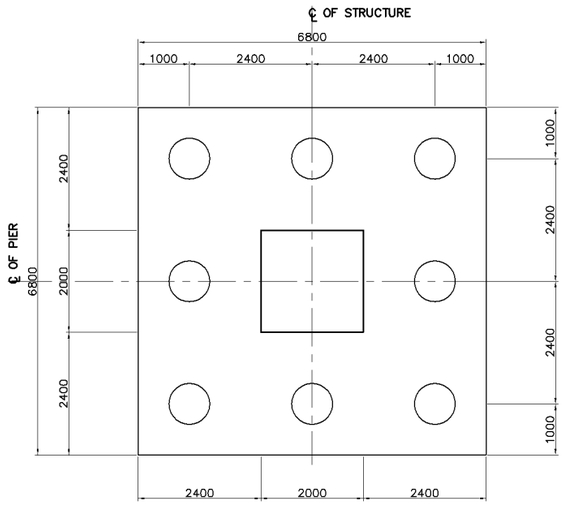

4 SCALE **PILE CAP SECTION** 1:120

SUMMARY OF QUANTITIES - 1 PIER (P30)

DESCRIPTION	UNIT	QUANTITIES		
		FOUNDATION	PIER	TOTAL
EARTH WORKS				
STRUCTURE EXCAVATION	CU.M.	225		225
FOUNDATION FILL	CU.M.	110		110
STRUCTURE BACK FILL	CU.M.			
STRUCTURE WORKS				
CAST IN PLACE BORED PILE (800mmø)	M.	160		160
PILE LOAD TEST-STATIC (800MM DIA.)	No.	1		1
STRUCTURAL CONCRETE Fcu=450 kg/cm2	CU.M.			
STRUCTURAL CONCRETE Fcu=300 kg/cm2	CU.M.	115		115
REINFORCING BARS	M.T.	25		25
STRUCTURAL STEEL	M.T.		75	75

NOTE:

STRUCTURAL STEEL GRADE : STRUCTURAL STEEL GRADE SM400 (JIS G3114)

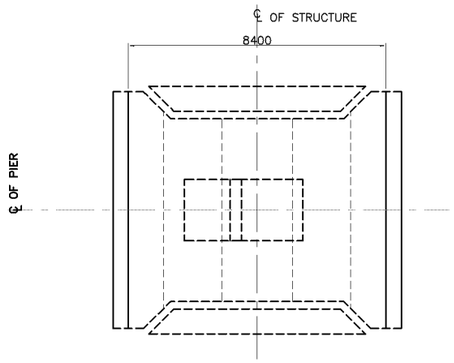

1 SCALE **PLAN** 1:200

SUMMARY OF QUANTITIES - 1 PIER (P31)

DESCRIPTION	UNIT	QUANTITIES		
		FOUNDATION	PIER	TOTAL
EARTH WORKS				
STRUCTURE EXCAVATION	CU.M.	310		310
FOUNDATION FILL	CU.M.	70		70
STRUCTURE BACK FILL	CU.M.			
STRUCTURE WORKS				
CAST IN PLACE BORED PILE (800mmø)	M.	240		240
PILE LOAD TEST-STATIC (800MM DIA.)	No.	1		1
STRUCTURAL CONCRETE Fcu=450 kg/cm2	CU.M.			
STRUCTURAL CONCRETE Fcu=300 kg/cm2	CU.M.	150		150
REINFORCING BARS	M.T.	30		30
STRUCTURAL STEEL	M.T.		90	90

NOTE:

STRUCTURAL STEEL GRADE : STRUCTURAL STEEL GRADE SM520 (JIS G3114)

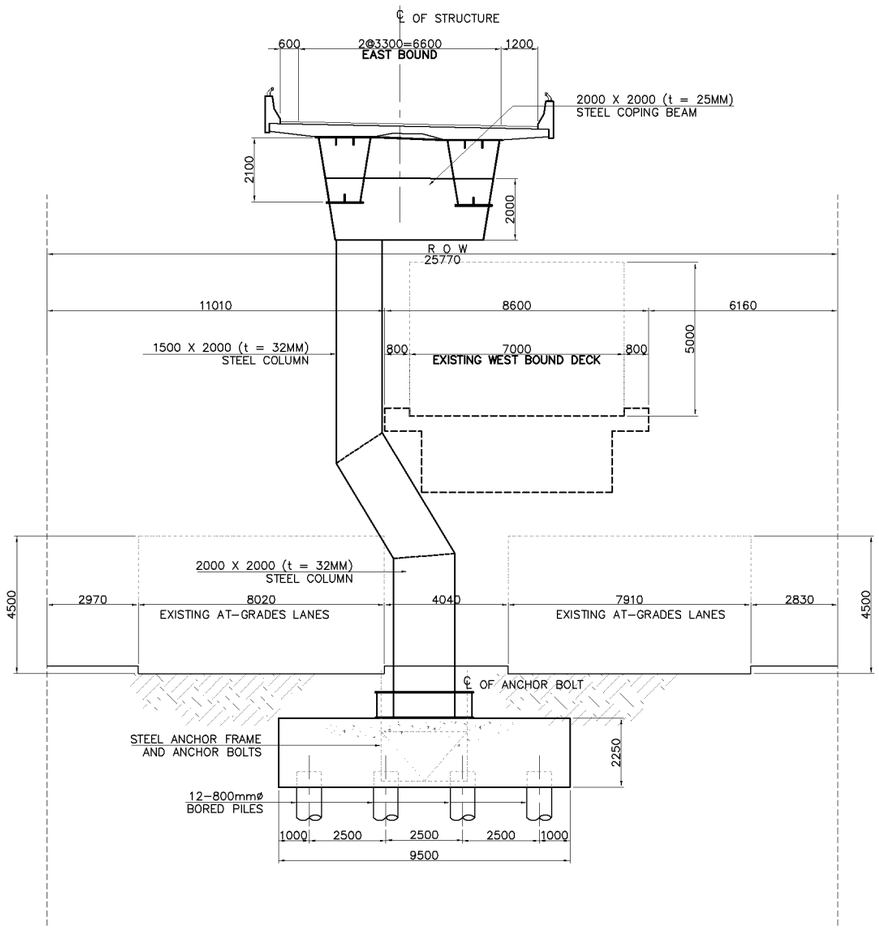

2 SCALE **STEEL ASYMMETRICAL PIER ELEVATION (EXPANSION)** 1:200

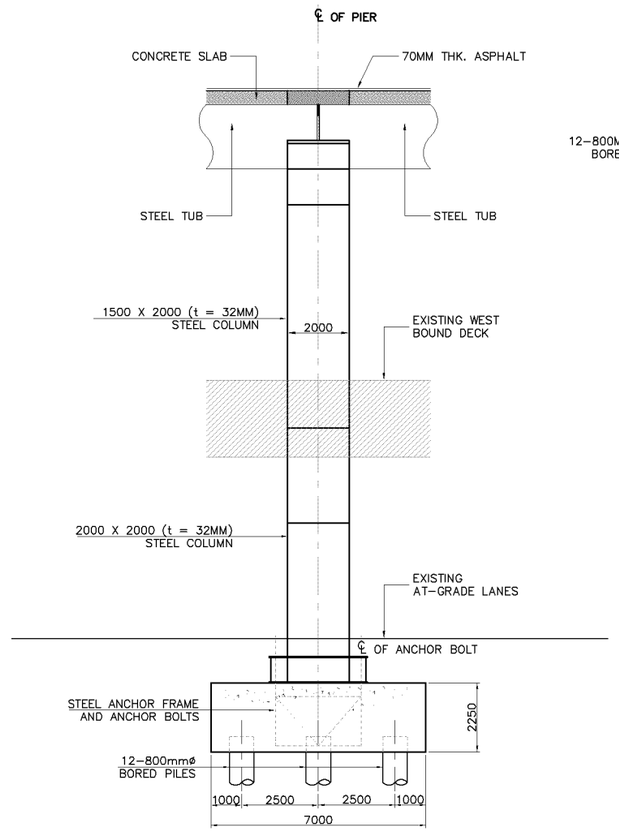

3 SCALE **SIDE ELEVATION** 1:200

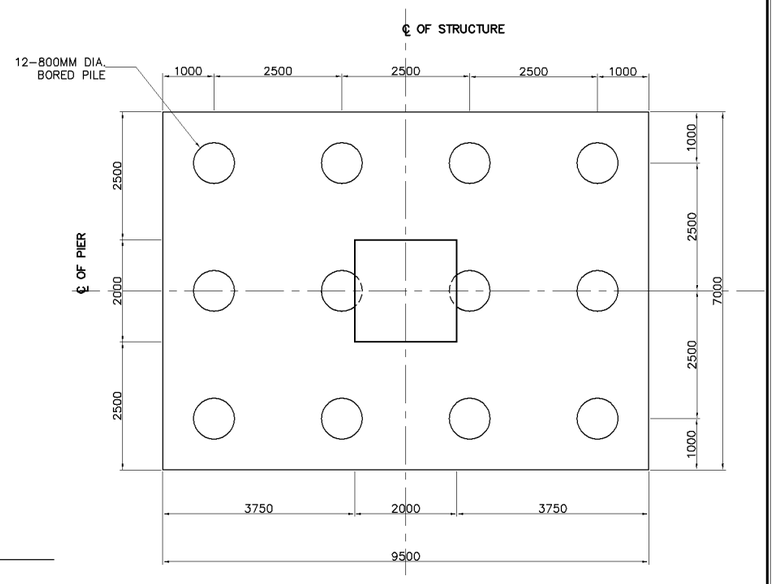

4 SCALE **PILE CAP SECTION** 1:120

KATAHIRA & ENGINEERS INTERNATIONAL PRICE WATERHOUSE COOPERS ADVISORY CO., LTD.	JICA JAPAN INTERNATIONAL COOPERATION AGENCY	GENERAL AUTHORITY FOR ROADS BRIDGES AND LAND TRANSPORT (GARBLT) MINISTRY OF TRANSPORT ARAB REPUBLIC OF EGYPT	PROJECT AND LOCATION : FEASIBILITY STUDY ON HIGH PRIORITY URBAN TOLL EXPRESSWAYS IN CAIRO E2-2 EXPRESSWAY	SCALE : 1:120 1:200 FULL SIZE A3	DRAWING TITLE : ASYMMETRICAL STEEL PIER TYPE 2 (50m)	DRAWING NO : E2-2/S-09 SHEET NO : 9 / 23

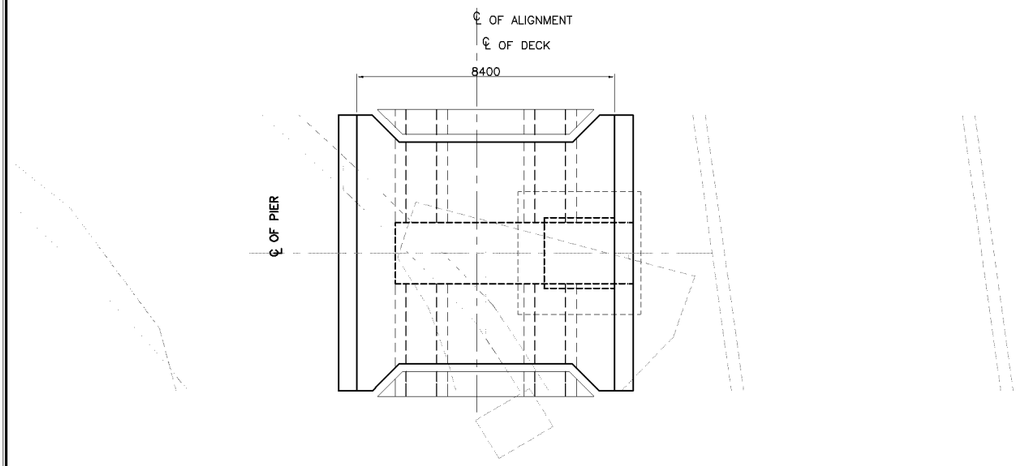

SUMMARY OF QUANTITIES - 1 PIER (P32)

DESCRIPTION	UNIT	QUANTITIES		
		FOUNDATION	PIER	TOTAL
EARTH WORKS				
STRUCTURE EXCAVATION	CU.M.	100		100
FOUNDATION FILL	CU.M.			
STRUCTURE BACK FILL	CU.M.	50		50
STRUCTURE WORKS				
CAST IN PLACE BORED PILE (3000MM DIA.)	M.	20		20
PILE INTEGRITY TEST (3000MM DIA.)	No.	1		1
STRUCTURAL CONCRETE Fcu=450 kg/cm2	CU.M.			
STRUCTURAL CONCRETE Fcu=300 kg/cm2	CU.M.	50		50
REINFORCING BARS	M.T.	10		10
STRUCTURAL STEEL	M.T.		100	100

NOTE:

STRUCTURAL STEEL GRADE : SM520 (JIS G3114)

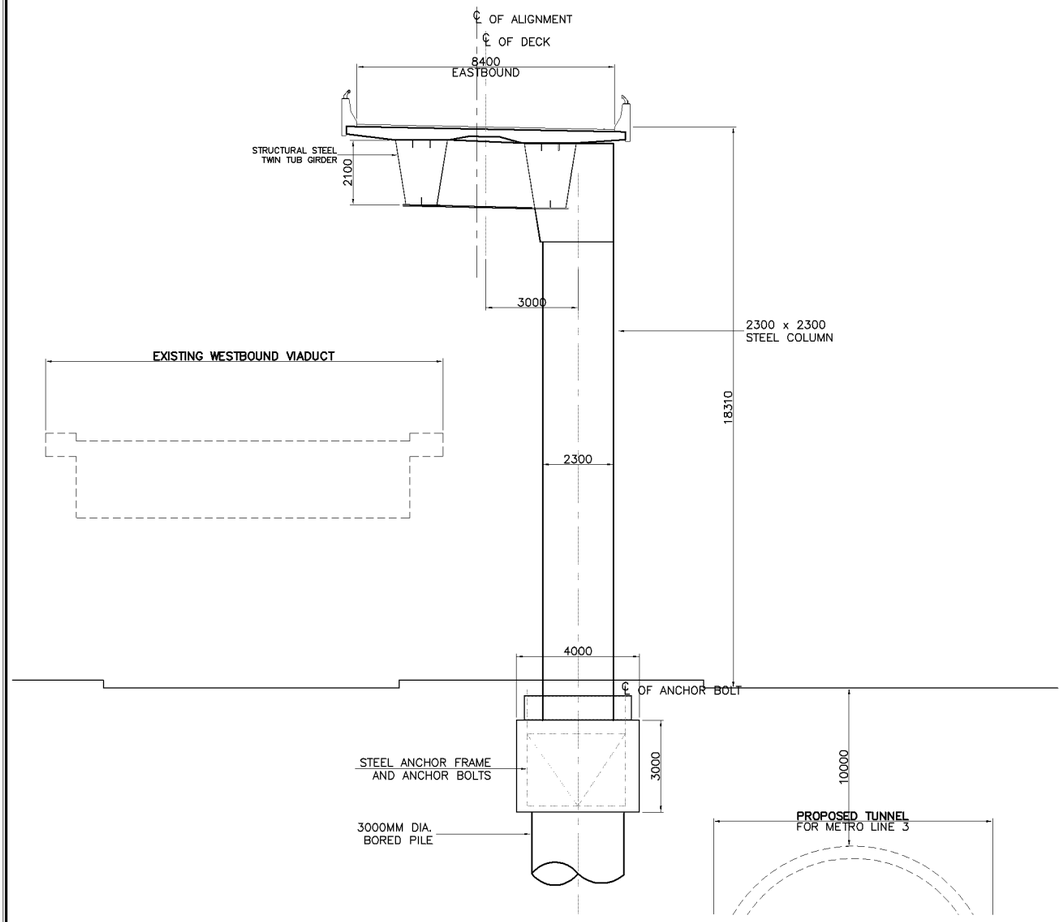

2 SCALE

STEEL CANTILEVER PIER ELEVATION (EXPANSION)

1:200

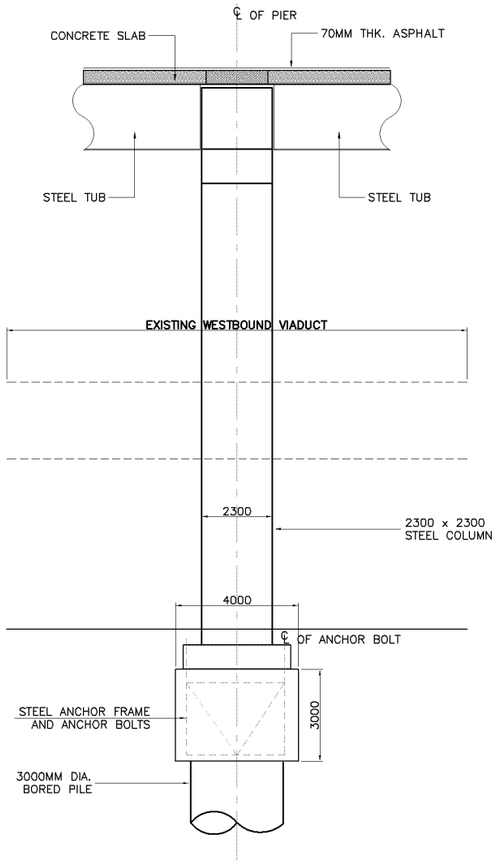

3 SCALE

SIDE ELEVATION

1:200

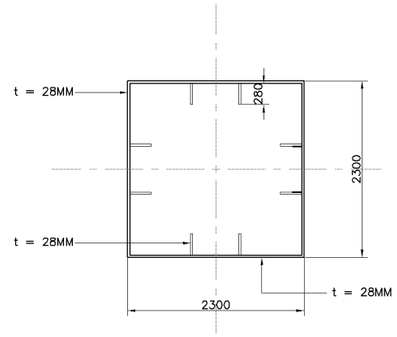

4 SCALE

SECTION STEEL COLUMN

1:80

KATAHIRA & ENGINEERS INTERNATIONAL PRICE WATERHOUSE COOPERS ADVISORY CO., LTD.	JICA JAPAN INTERNATIONAL COOPERATION AGENCY	GENERAL AUTHORITY FOR ROADS BRIDGES AND LAND TRANSPORT (GARBLT) MINISTRY OF TRANSPORT ARAB REPUBLIC OF EGYPT	PROJECT AND LOCATION : FEASIBILITY STUDY ON HIGH PRIORITY URBAN TOLL EXPRESSWAYS IN CAIRO E2-2 EXPRESSWAY	SCALE : 1:80 1:200 FULL SIZE A3	DRAWING TITLE : SINGLE COLUMN STEEL PIER - TYPE 1	DRAWING NO : E2-2/S-10 SHEET NO : 10 / 23

SUMMARY OF QUANTITIES - 7 PIERS (P49 - P55)

DESCRIPTION	UNIT	QUANTITIES		
		FOUNDATION	PIER	TOTAL
EARTH WORKS				
STRUCTURE EXCAVATION	CU.M.	700		700
FOUNDATION FILL	CU.M.			
STRUCTURE BACK FILL	CU.M.	370		370
STRUCTURE WORKS				
CAST IN PLACE BORED PILE (3000mmø)	M.	140		140
PILE INTENSITY TEST (3000MM DIA.)	No.	7		7
STRUCTURAL CONCRETE Fcu=450 kg/cm2	CU.M.			
STRUCTURAL CONCRETE Fcu=300 kg/cm2	CU.M.	340		340
REINFORCING BARS	M.T.	70		70
STRUCTURAL STEEL	M.T.		525	525

NOTE:

STRUCTURAL STEEL GRADE : SM520 (JIS G3114)

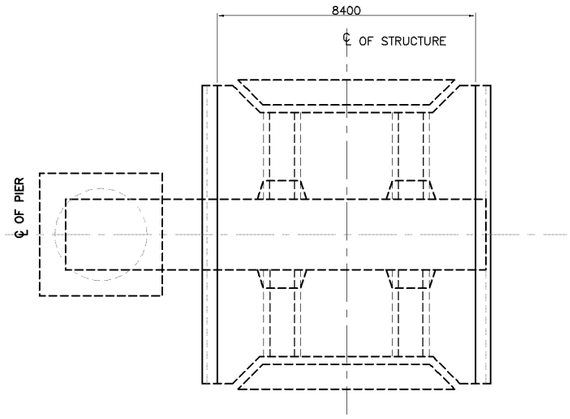

1 SCALE **PLAN** 1:200

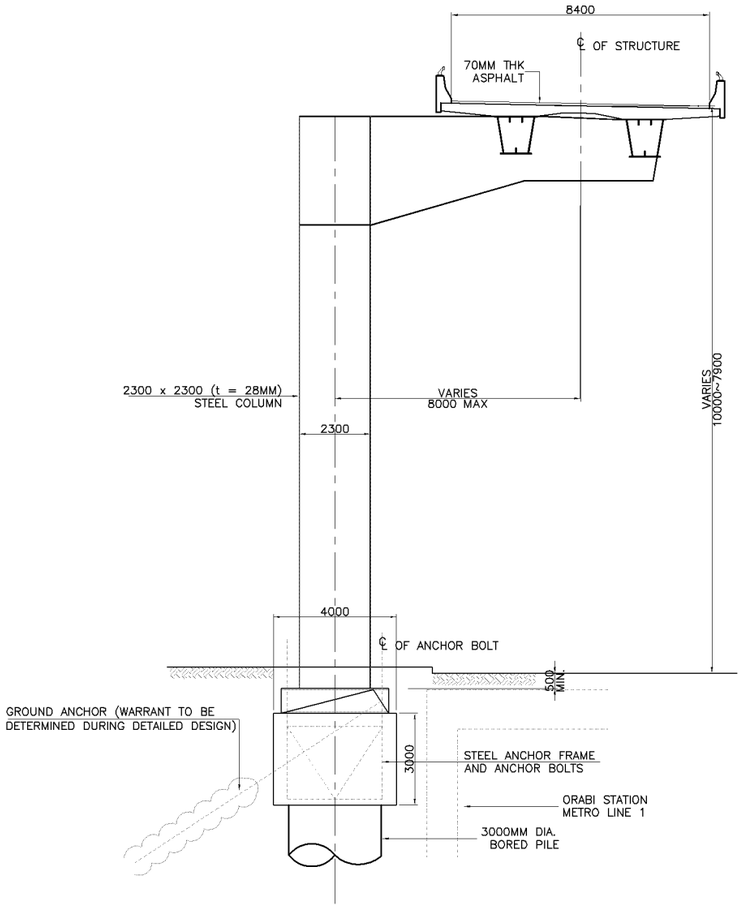

2 SCALE **CANTELIVER STEEL COLUMN PIER ELEVATION** 1:200

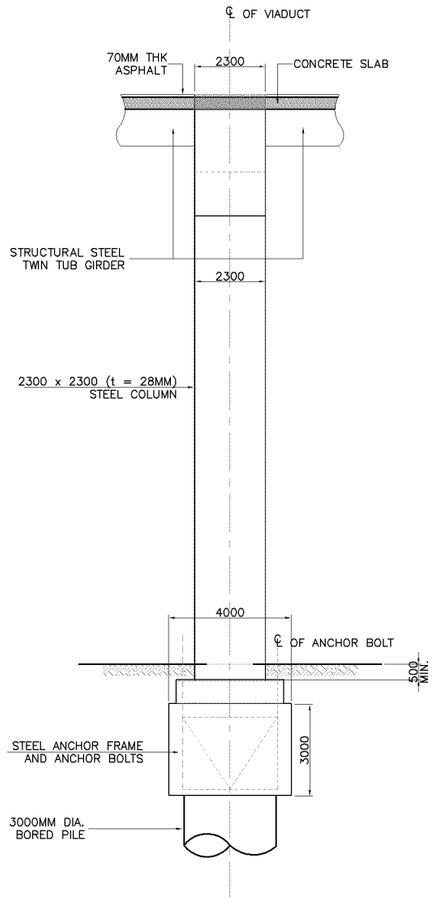

3 SCALE **SIDE ELEVATION** 1:200

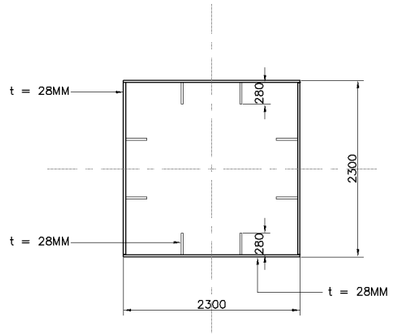

4 SCALE **COLUMN SECTION** 1:80

KATAHIRA & ENGINEERS INTERNATIONAL PRICE WATERHOUSE COOPERS ADVISORY CO., LTD.	JICA JAPAN INTERNATIONAL COOPERATION AGENCY	GENERAL AUTHORITY FOR ROADS BRIDGES AND LAND TRANSPORT (GARBLT) MINISTRY OF TRANSPORT ARAB REPUBLIC OF EGYPT	PROJECT AND LOCATION : FEASIBILITY STUDY ON HIGH PRIORITY URBAN TOLL EXPRESSWAYS IN CAIRO E2-2 EXPRESSWAY	SCALE : 1:200 1:80 FULL SIZE A3	DRAWING TITLE : SINGLE COLUMN STEEL PIER TYPE-2	DRAWING NO : E2-2/S-11 SHEET NO : 11 / 23

SUMMARY OF QUANTITIES - 2 PIERS (P34 & P35).

DESCRIPTION	UNIT	QUANTITIES		
		FOUNDATION	PIER	TOTAL
EARTH WORKS				
STRUCTURE EXCAVATION	CU.M.			
FOUNDATION FILL	CU.M.			
STRUCTURE BACK FILL	CU.M.			
STRUCTURE WORKS				
CAST IN PLACE BORED PILE (2500mmø)	M.	40		40
PILE INTEGRITY TEST (2500MM DIA.)	No.	2		2
STRUCTURAL CONCRETE Fcu=450 kg/cm2	CU.M.		110	110
STRUCTURAL CONCRETE Fcu=300 kg/cm2	CU.M.			
REINFORCING BARS	M.T.			
STRUCTURAL STEEL	M.T.	10	80	90

NOTE:

STRUCTURAL STEEL GRADE : COPING SM520 (JIS G3114)
: COLUMN SM400 (JIS G3114)

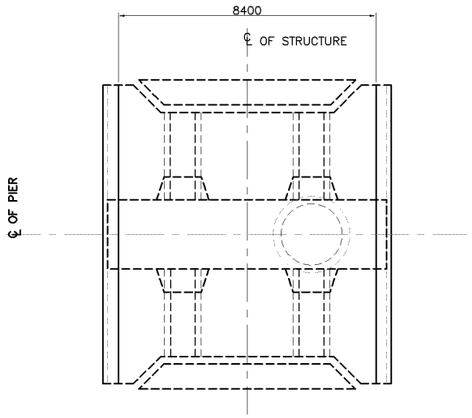

1 SCALE **PLAN** 1:200

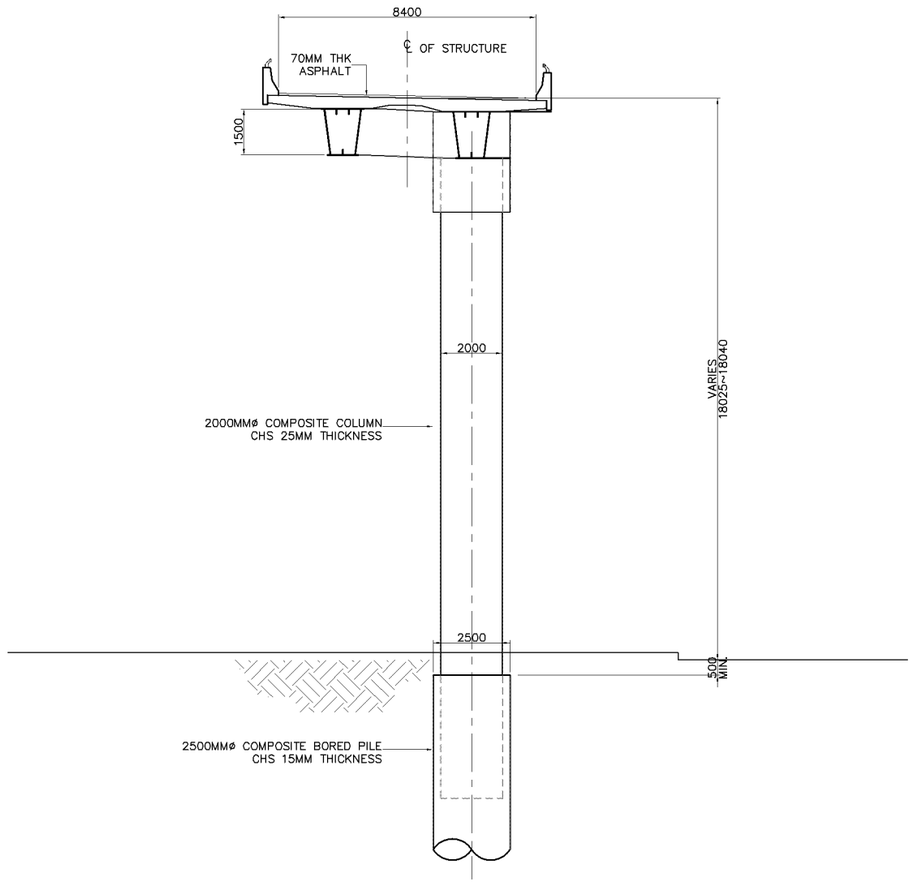

2 SCALE **COMPOSITE SINGLE COLUMN PIER ELEVATION** 1:200

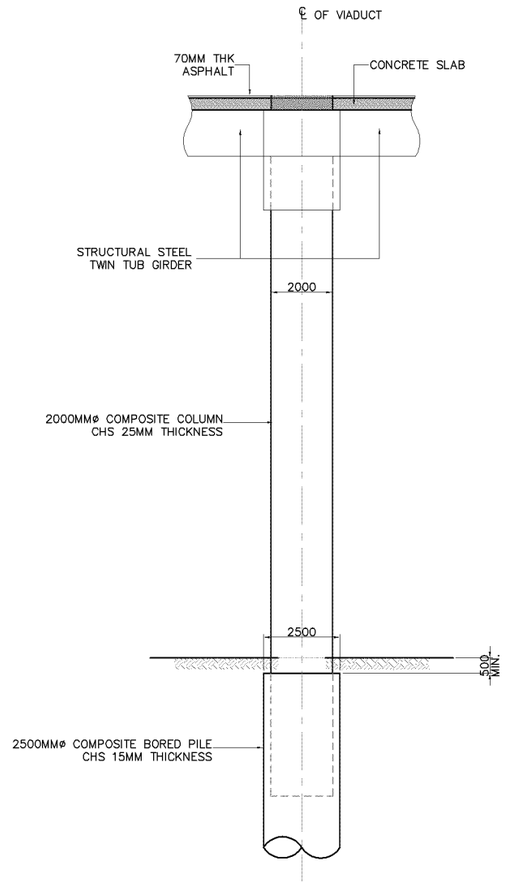

3 SCALE **SIDE ELEVATION** 1:200

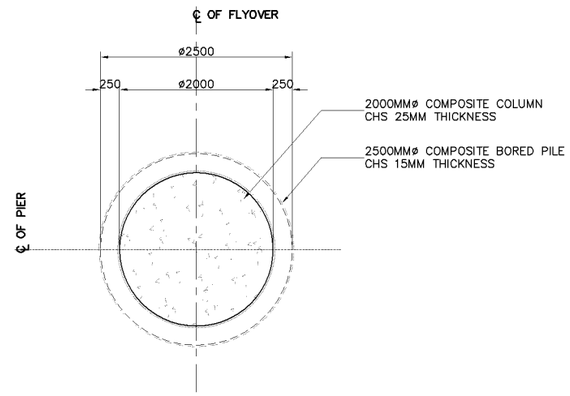

4 SCALE **COLUMN SECTION** 1:80

KATAHIRA & ENGINEERS INTERNATIONAL PRICE WATERHOUSE COOPERS ADVISORY CO., LTD.	JICA JAPAN INTERNATIONAL COOPERATION AGENCY	GENERAL AUTHORITY FOR ROADS BRIDGES AND LAND TRANSPORT (GARBLT) MINISTRY OF TRANSPORT ARAB REPUBLIC OF EGYPT	PROJECT AND LOCATION : FEASIBILITY STUDY ON HIGH PRIORITY URBAN TOLL EXPRESSWAYS IN CAIRO E2-2 EXPRESSWAY	SCALE : 1:200 1:80 FULL SIZE A3	DRAWING TITLE : SINGLE COLUMN COMPOSITE PIER TYPE-1	DRAWING NO : E2-2/S-12 SHEET NO : 12 / 23

SUMMARY OF QUANTITIES - 13 PIERS (P36 - P48)

DESCRIPTION	UNIT	QUANTITIES		
		FOUNDATION	PIER	TOTAL
EARTH WORKS				
STRUCTURE EXCAVATION	CU.M.			
FOUNDATION FILL	CU.M.			
STRUCTURE BACK FILL	CU.M.			
STRUCTURE WORKS				
CAST IN PLACE BORED PILE (2500mmø)	M.	260		260
PILE INTEGRITY TEST (2500MM DIA.)	No.	13		13
STRUCTURAL CONCRETE Fcu=450 kg/cm2	CU.M.		585	585
STRUCTURAL CONCRETE Fcu=300 kg/cm2	CU.M.			
REINFORCING BARS	M.T.			
STRUCTURAL STEEL	M.T.	70	440	510

NOTE:

STRUCTURAL STEEL GRADE : COPING SM520 (JIS G3114)
: COLUMN SM400 (JIS G3114)

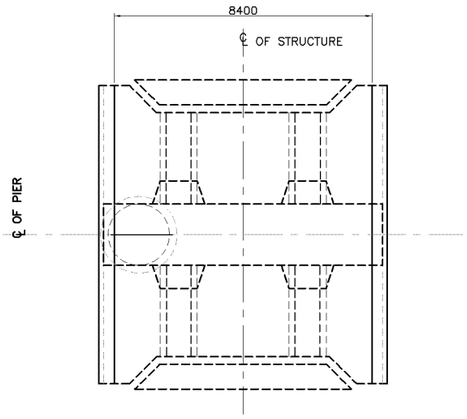

1 SCALE **PLAN** 1:200

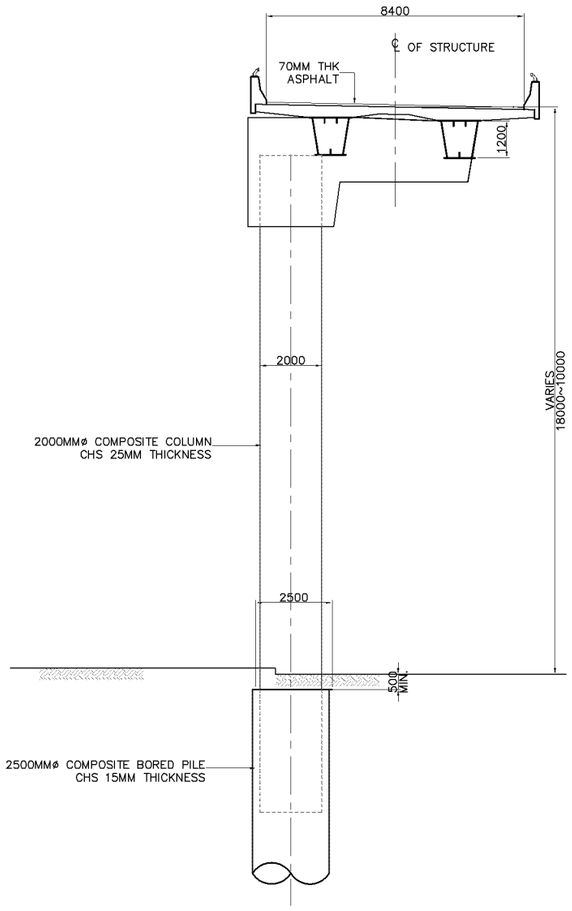

2 SCALE **COMPOSITE SINGLE COLUMN PIER ELEVATION** 1:200

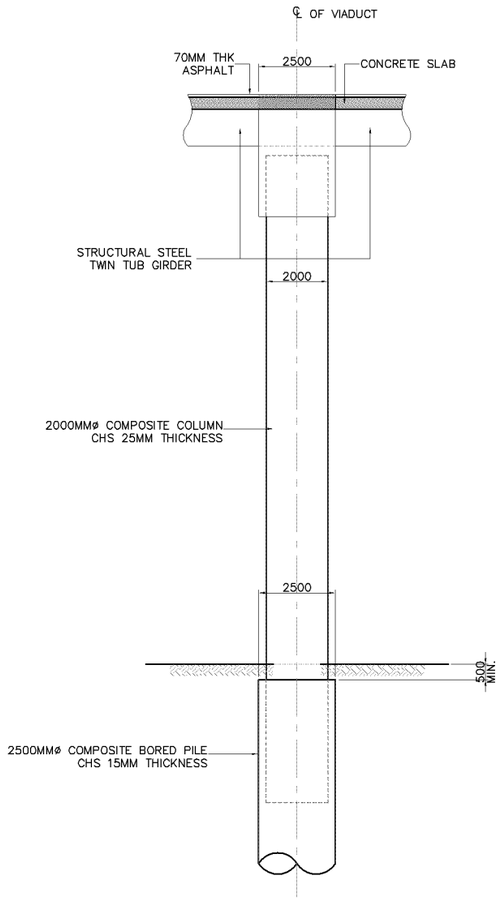

3 SCALE **SIDE ELEVATION** 1:200

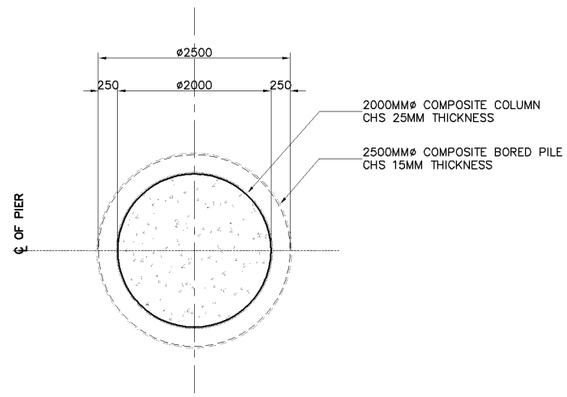

4 SCALE **COLUMN SECTION** 1:80

KATAHIRA & ENGINEERS INTERNATIONAL PRICE WATERHOUSE COOPERS ADVISORY CO., LTD.	JICA JAPAN INTERNATIONAL COOPERATION AGENCY	GENERAL AUTHORITY FOR ROADS BRIDGES AND LAND TRANSPORT (GARBLT) MINISTRY OF TRANSPORT ARAB REPUBLIC OF EGYPT	PROJECT AND LOCATION : FEASIBILITY STUDY ON HIGH PRIORITY URBAN TOLL EXPRESSWAYS IN CAIRO E2-2 EXPRESSWAY	SCALE : 1:200 1:80 FULL SIZE A3	DRAWING TITLE : SINGLE COLUMN COMPOSITE PIER TYPE-2	DRAWING NO : E2-2/S-13 SHEET NO : 13 / 23

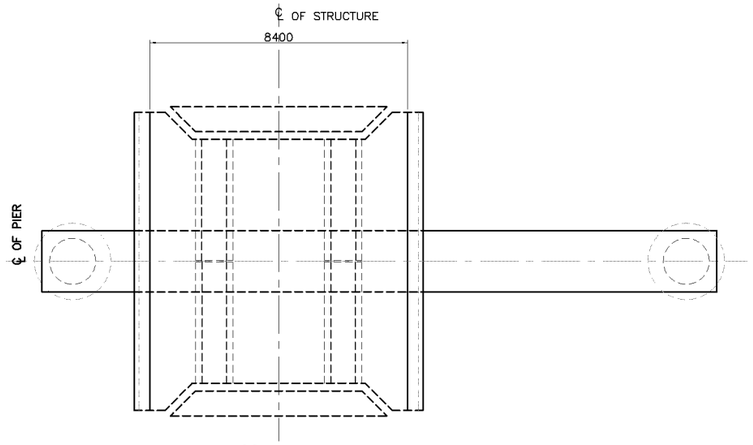

1 SCALE **PLAN** 1:200

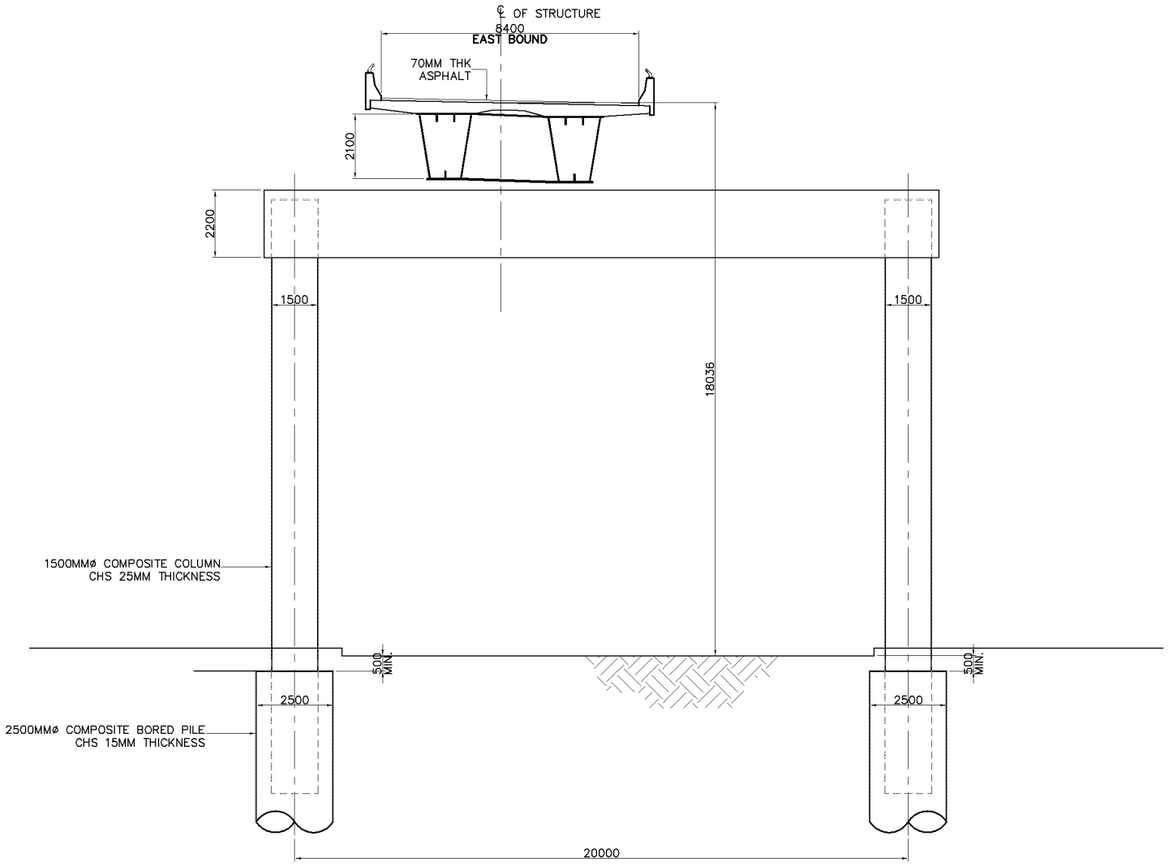

2 SCALE **TWIN COMPOSITE COLUMN PIER ELEVATION** 1:200

SUMMARY OF QUANTITIES - 1 PIER (P33)

DESCRIPTION	UNIT	QUANTITIES		
		FOUNDATION	PIER	TOTAL
EARTH WORKS				
STRUCTURE EXCAVATION	CU.M.			
FOUNDATION FILL	CU.M.			
STRUCTURE BACK FILL	CU.M.			
STRUCTURE WORKS				
CAST IN PLACE BORED PILE (2500mmø)	M.	40		40
PILE INTEGRITY TEST-STATIC (2500MM DIA.)	No.	1		1
STRUCTURAL CONCRETE Fcu=450 kg/cm2	CU.M.		60	60
STRUCTURAL CONCRETE Fcu=300 kg/cm2	CU.M.			
REINFORCING BARS	M.T.			
STRUCTURAL STEEL	M.T.	15	105	120

NOTE:

STRUCTURAL STEEL GRADE : COPING SM520 (JIS G3114)
: COLUMN SM400 (JIS G3114)

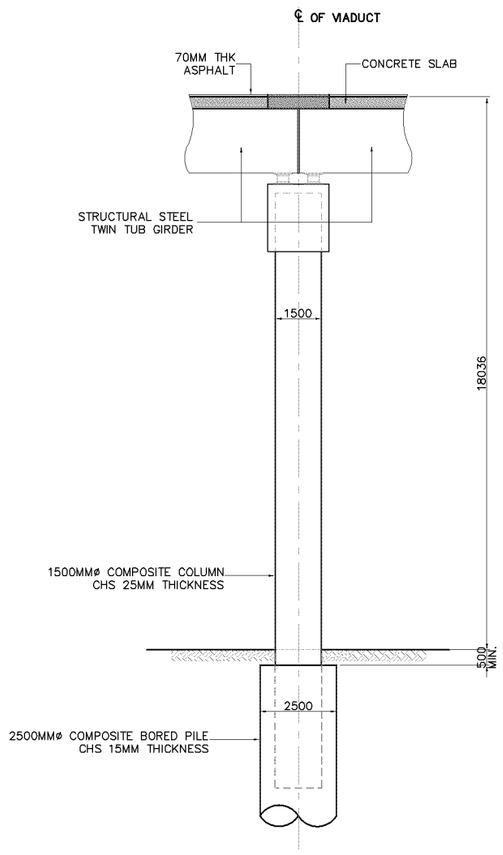

3 SCALE **SIDE ELEVATION** 1:200

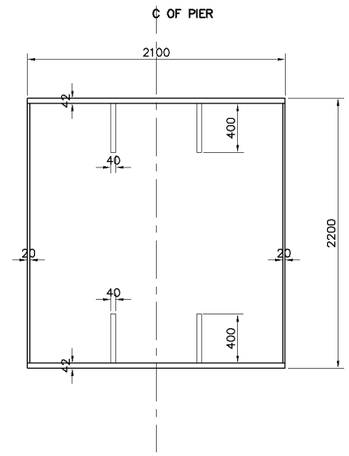

5 SCALE **COPING BEAM SECTION** 1:50

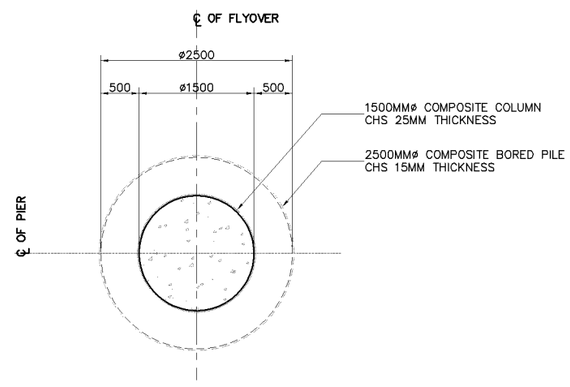

4 SCALE **COLUMN SECTION** 1:80

KATAHIRA & ENGINEERS INTERNATIONAL PRICE WATERHOUSE COOPERS ADVISORY CO., LTD.	JICA JAPAN INTERNATIONAL COOPERATION AGENCY	GENERAL AUTHORITY FOR ROADS BRIDGES AND LAND TRANSPORT (GARBLT) MINISTRY OF TRANSPORT ARAB REPUBLIC OF EGYPT	PROJECT AND LOCATION : FEASIBILITY STUDY ON HIGH PRIORITY URBAN TOLL EXPRESSWAYS IN CAIRO E2-2 EXPRESSWAY	SCALE : 1:200 1:80 1:50 FULL SIZE A3	DRAWING TITLE : TWIN COMPOSITE COLUMN & STEEL COPING PIER TYPE-1 (50m)	DRAWING NO : E2-2/S-14 SHEET NO : 14 / 23

SUMMARY OF QUANTITIES - 1 PIER (P56)

DESCRIPTION	UNIT	QUANTITIES		
		FOUNDATION	PIER	TOTAL
EARTH WORKS				
STRUCTURE EXCAVATION	CU.M.			
FOUNDATION FILL	CU.M.			
STRUCTURE BACK FILL	CU.M.			
STRUCTURE WORKS				
CAST IN PLACE BORED PILE (2500mmø)	M.	40		40
PILE INTEGRITY TEST (2500MM DIA.)	No.	1		1
STRUCTURAL CONCRETE Fcu=450 kg/cm2	CU.M.		40	40
STRUCTURAL CONCRETE Fcu=300 kg/cm2	CU.M.			
REINFORCING BARS	M.T.			
STRUCTURAL STEEL	M.T.	15	170	185

NOTE:

STRUCTURAL STEEL GRADE : COPING SM520 (JIS G3114)
: COLUMN SM400 (JIS G3114)

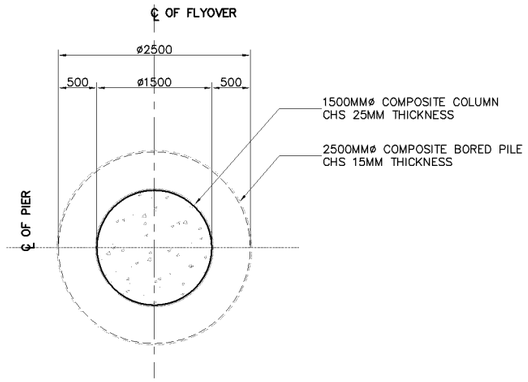

4 SCALE **COLUMN SECTION** 1:80

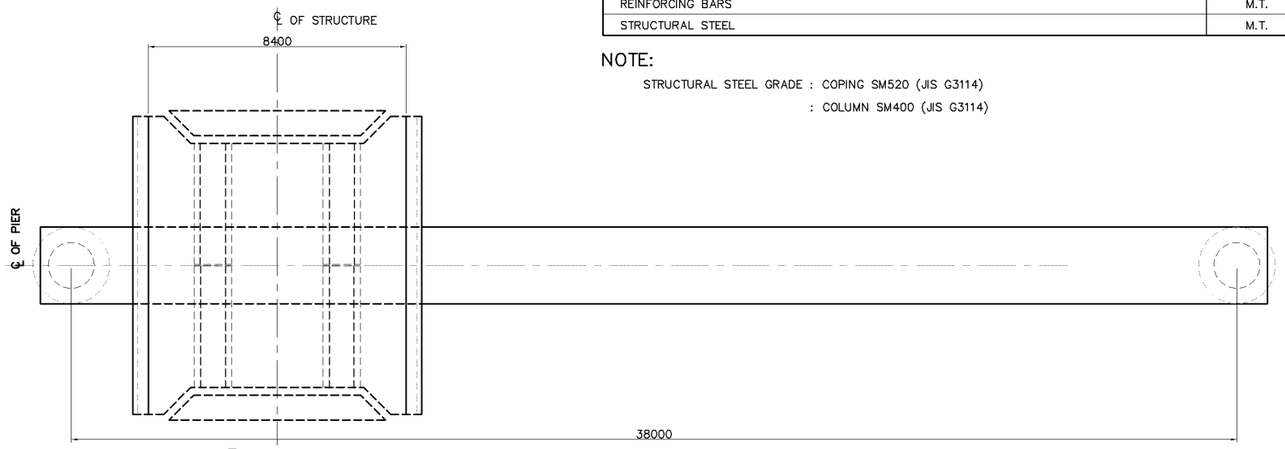

1 SCALE **PLAN** 1:200

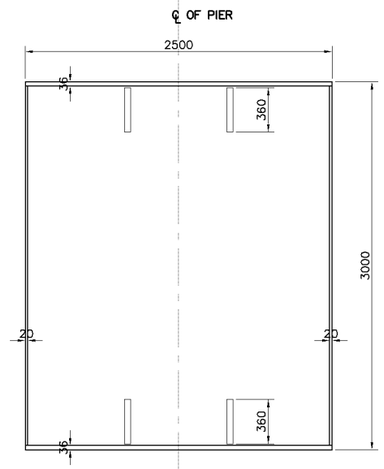

5 SCALE **COPING BEAM SECTION** 1:50

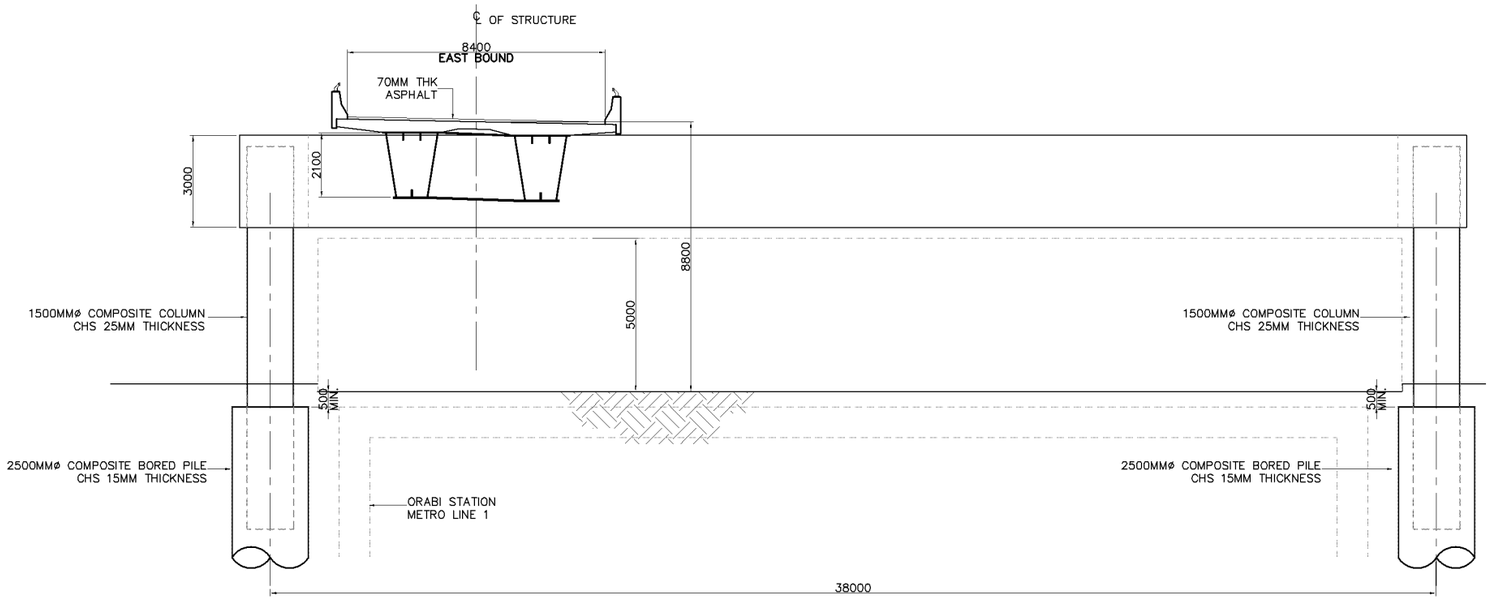

2 SCALE **TWIN COMPOSITE COLUMN PIER ELEVATION** 1:200

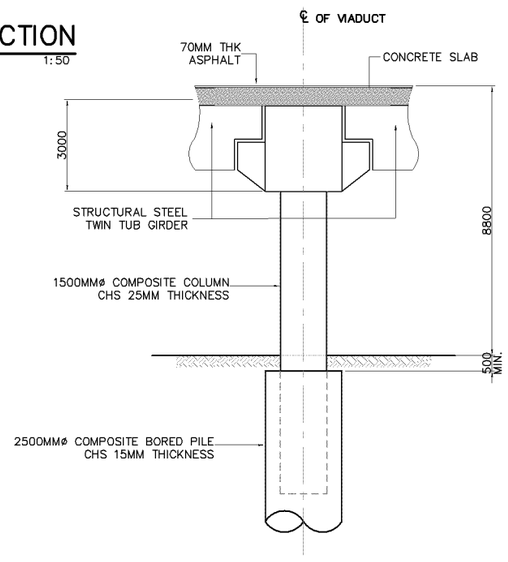

3 SCALE **SIDE ELEVATION** 1:200

KATAHIRA & ENGINEERS INTERNATIONAL PRICE WATERHOUSE COOPERS ADVISORY CO., LTD.	JICA JAPAN INTERNATIONAL COOPERATION AGENCY	GENERAL AUTHORITY FOR ROADS BRIDGES AND LAND TRANSPORT (GARBLT) MINISTRY OF TRANSPORT ARAB REPUBLIC OF EGYPT	PROJECT AND LOCATION : FEASIBILITY STUDY ON HIGH PRIORITY URBAN TOLL EXPRESSWAYS IN CAIRO E2-2 EXPRESSWAY	SCALE : 1:200 1:80 1:50 FULL SIZE A3	DRAWING TITLE : TWIN COMPOSITE COLUMN & STEEL COPING PIER TYPE-2 (50m)	DRAWING NO : E2-2/S-15 SHEET NO : 15 / 23

SUMMARY OF QUANTITIES - 1 PIER (P57)

DESCRIPTION	UNIT	QUANTITIES		
		FOUNDATION	PIER	TOTAL
EARTH WORKS				
STRUCTURE EXCAVATION	CU.M.			
FOUNDATION FILL	CU.M.			
STRUCTURE BACK FILL	CU.M.			
STRUCTURE WORKS				
CAST IN PLACE BORED PILE (2500mmø)	M.	40		40
PILE INTEGRITY TEST (2500MM DIA.)	No.	1		1
STRUCTURAL CONCRETE Fcu=450 kg/cm2	CU.M.		40	40
STRUCTURAL CONCRETE Fcu=300 kg/cm2	CU.M.			
REINFORCING BARS	M.T.			
STRUCTURAL STEEL	M.T.	15	135	150

NOTE:

STRUCTURAL STEEL GRADE : COPING SM520 (JIS G3114)
: COLUMN SM400 (JIS G3114)

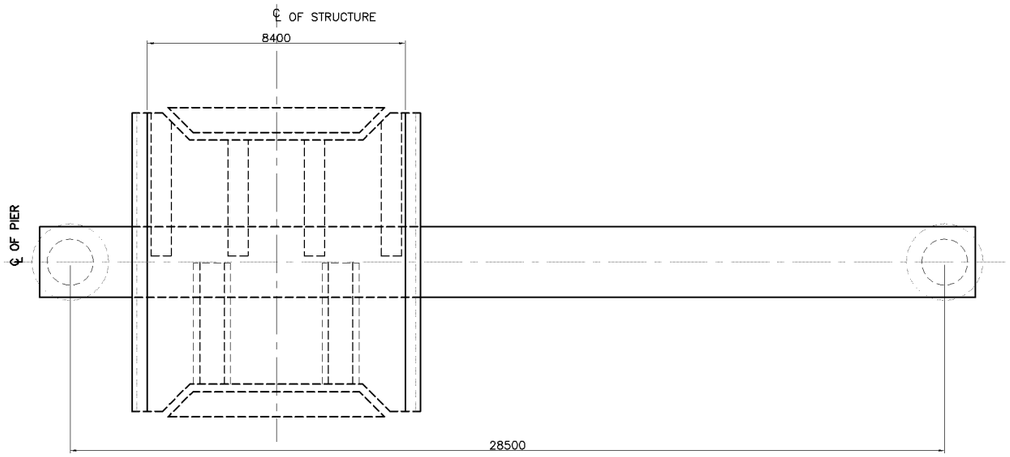

1 SCALE **PLAN** 1:200

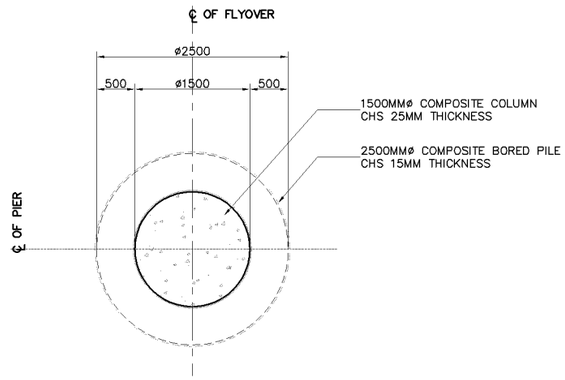

4 SCALE **COLUMN SECTION** 1:80

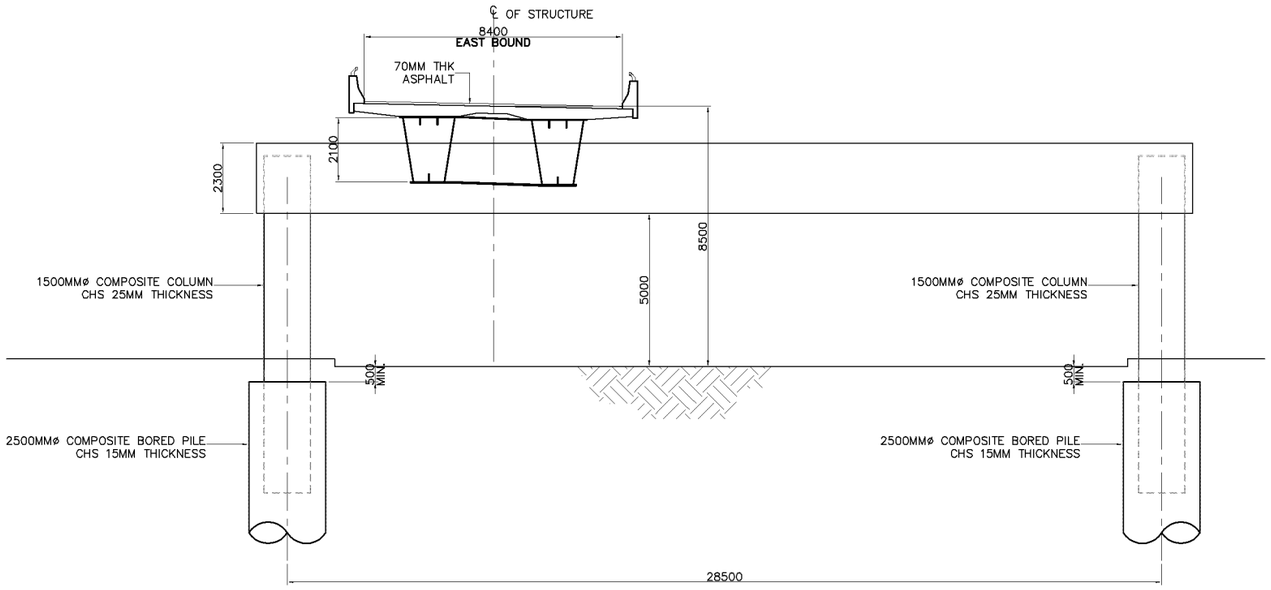

2 SCALE **TWIN COMPOSITE COLUMN PIER ELEVATION** 1:200

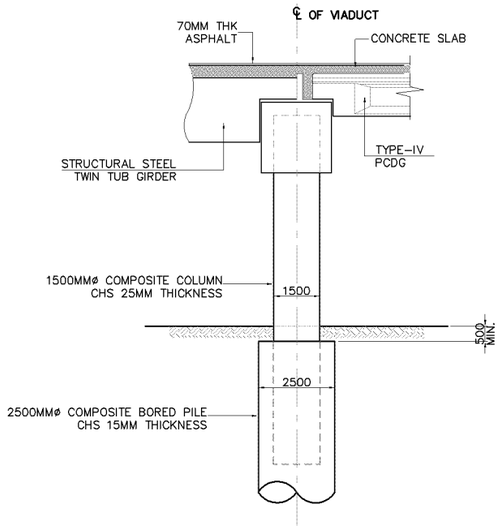

3 SCALE **SIDE ELEVATION** 1:200

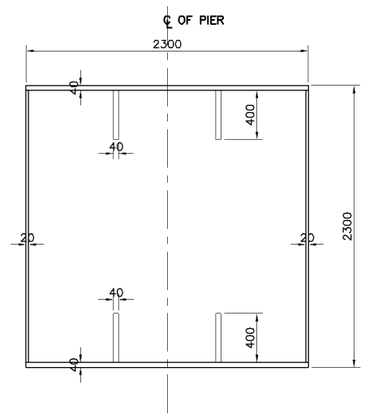

5 SCALE **COPING BEAM SECTION** 1:50

KATAHIRA & ENGINEERS INTERNATIONAL PRICE WATERHOUSE COOPERS ADVISORY CO., LTD.	JICA JAPAN INTERNATIONAL COOPERATION AGENCY	GENERAL AUTHORITY FOR ROADS BRIDGES AND LAND TRANSPORT (GARBLT) MINISTRY OF TRANSPORT ARAB REPUBLIC OF EGYPT	PROJECT AND LOCATION : FEASIBILITY STUDY ON HIGH PRIORITY URBAN TOLL EXPRESSWAYS IN CAIRO E2-2 EXPRESSWAY	SCALE : 1:200 1:80 1:50 FULL SIZE A3	DRAWING TITLE : TWIN COMPOSITE COLUMN & STEEL COPING PIER TYPE-3 (25m)	DRAWING NO : E2-2/S-16 SHEET NO : 16 / 23

SUMMARY OF QUANTITIES - 2 PIERS (P58 & P59)

DESCRIPTION	UNIT	QUANTITIES		
		FOUNDATION	PIER	TOTAL
EARTH WORKS				
STRUCTURE EXCAVATION	CU.M.			
FOUNDATION FILL	CU.M.			
STRUCTURE BACK FILL	CU.M.			
STRUCTURE WORKS				
CAST IN PLACE BORED PILE (2500mmø)	M.	80		80
PILE INTEGRITY TEST (2500MM DIA.)	No.	2		2
STRUCTURAL CONCRETE Fcu=450 kg/cm2	CU.M.		50	50
STRUCTURAL CONCRETE Fcu=300 kg/cm2	CU.M.			
REINFORCING BARS	M.T.			
STRUCTURAL STEEL	M.T.	25	275	300

NOTE:

STRUCTURAL STEEL GRADE : COPING SM520 (JIS G3114)
: COLUMN SM400 (JIS G3114)

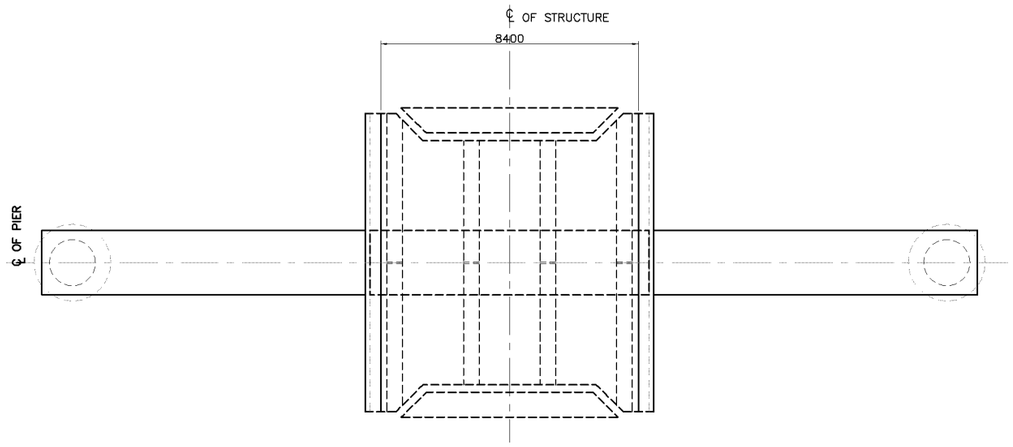

1 SCALE **PLAN** 1:200

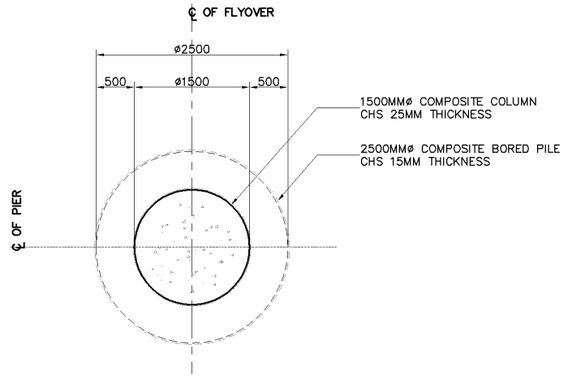

4 SCALE **COLUMN SECTION** 1:80

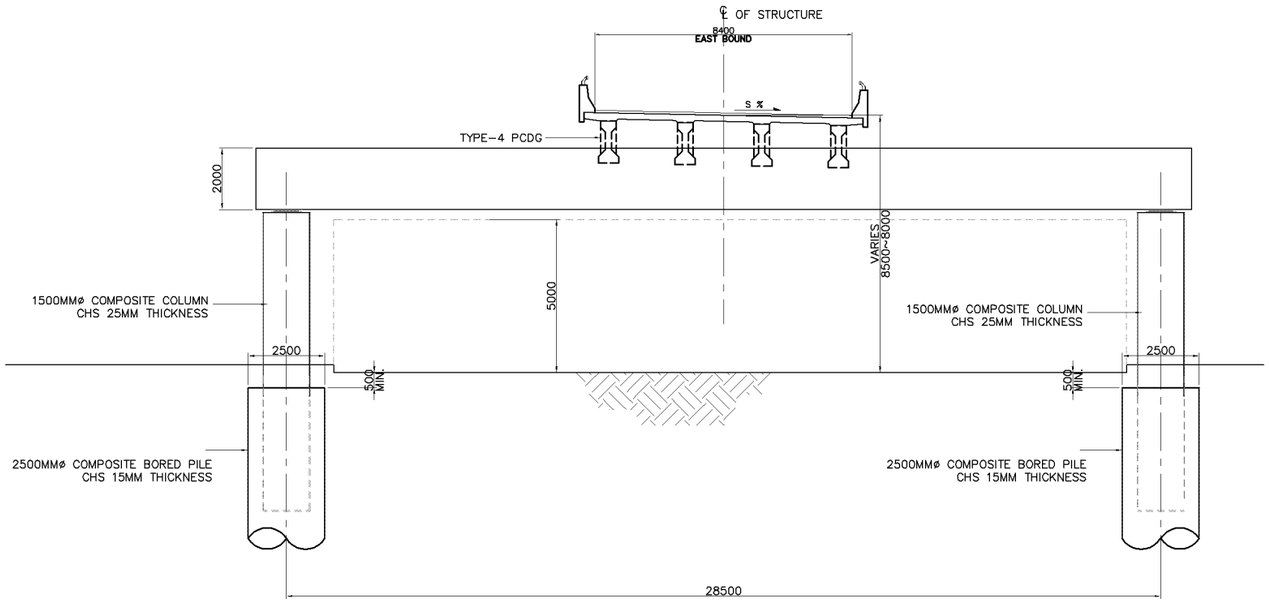

2 SCALE **TWIN COMPOSITE COLUMN PIER ELEVATION** 1:200

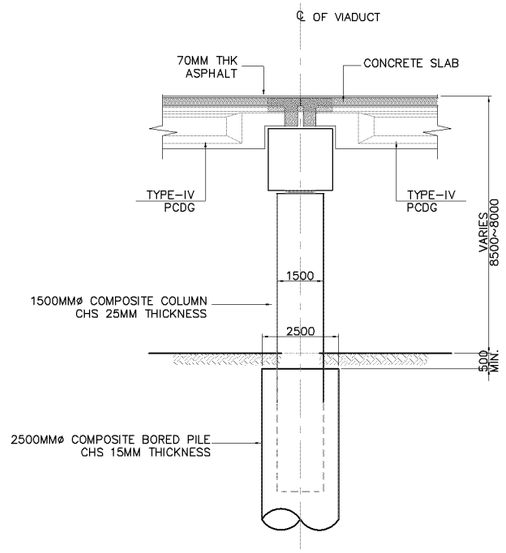

3 SCALE **SIDE ELEVATION** 1:200

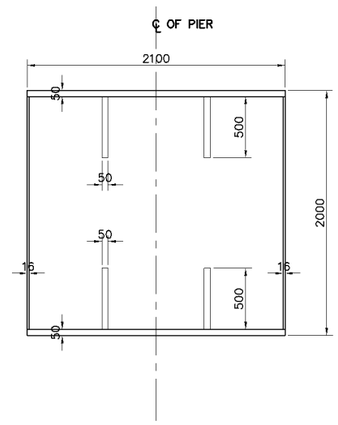

5 SCALE **COPING BEAM SECTION** 1:50

KATAHIRA & ENGINEERS INTERNATIONAL PRICE WATERHOUSE COOPERS ADVISORY CO., LTD.	JICA JAPAN INTERNATIONAL COOPERATION AGENCY	GENERAL AUTHORITY FOR ROADS BRIDGES AND LAND TRANSPORT (GARBLT) MINISTRY OF TRANSPORT ARAB REPUBLIC OF EGYPT	PROJECT AND LOCATION : FEASIBILITY STUDY ON HIGH PRIORITY URBAN TOLL EXPRESSWAYS IN CAIRO E2-2 EXPRESSWAY	SCALE : 1:200 1:80 1:50 FULL SIZE A3	DRAWING TITLE : TWIN COMPOSITE COLUMN & STEEL COPING PIER TYPE-4 (25m)	DRAWING NO : E2-2/S-17 SHEET NO : 17 / 23

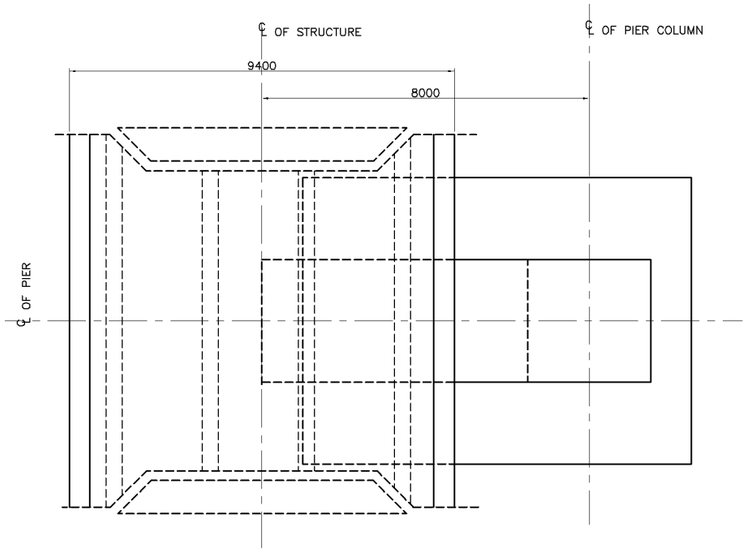

1 SCALE **PLAN** 1:150

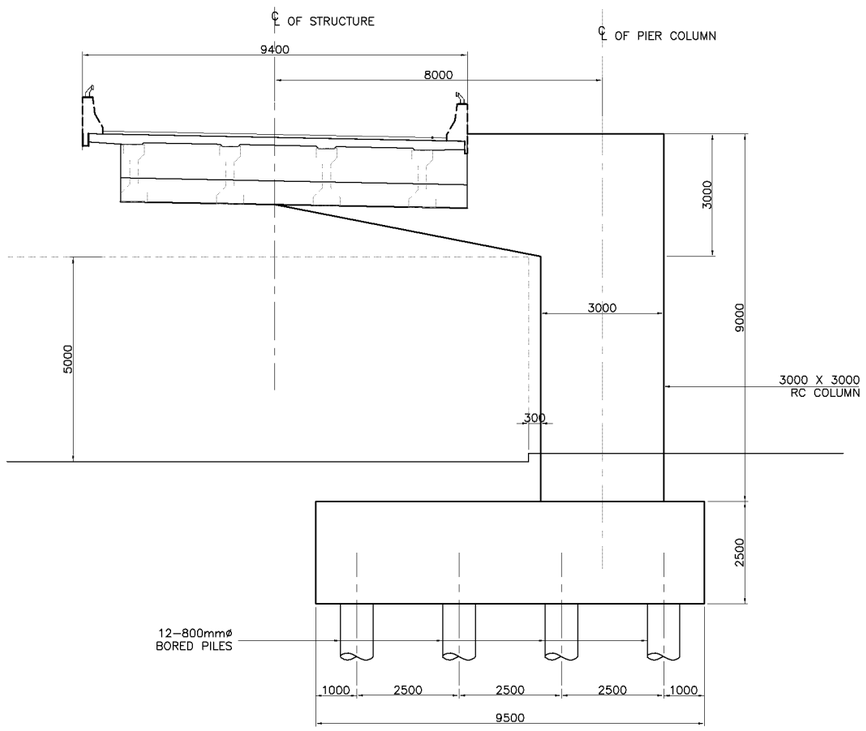

2 SCALE **RC SINGLE COLUMN PIER ELEVATION (EXPANSION)** 1:150

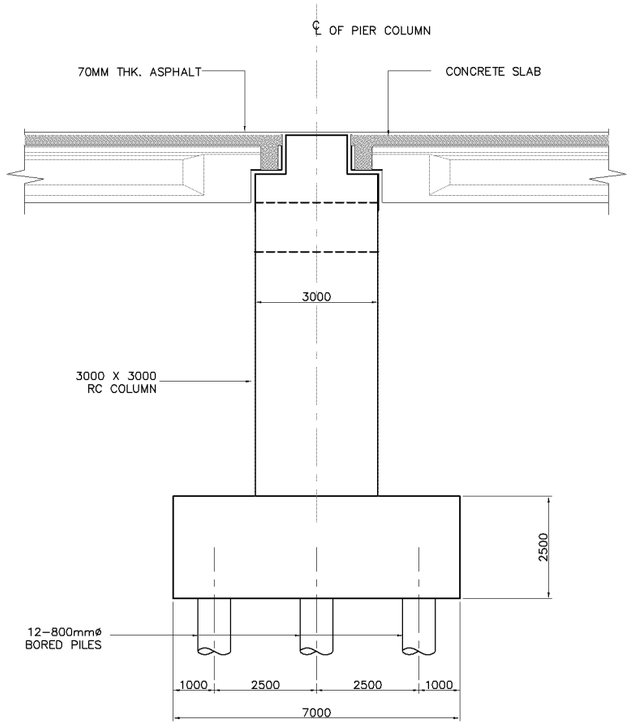

3 SCALE **SIDE ELEVATION** 1:150

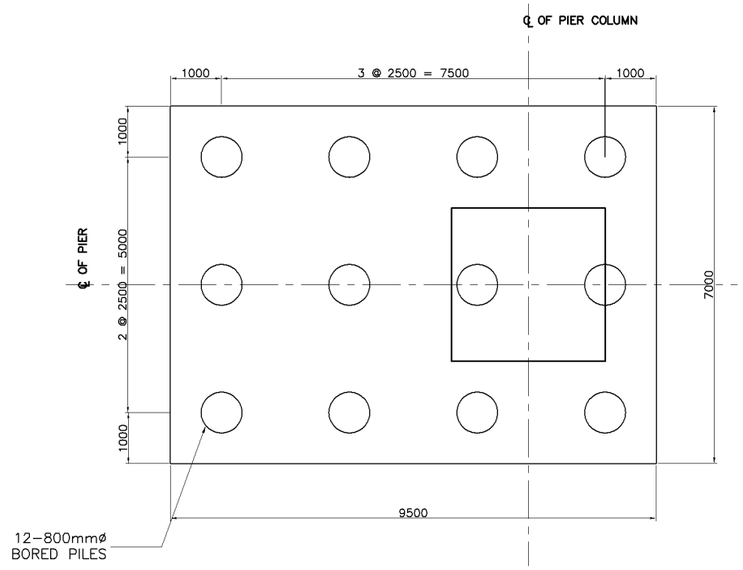

4 SCALE **PILE CAP SECTION** 1:120

SUMMARY OF QUANTITIES - 1 PIER (P60)

DESCRIPTION	UNIT	QUANTITIES		
		FOUNDATION	PIER	TOTAL
EARTH WORKS				
STRUCTURE EXCAVATION	CU.M.	380		380
FOUNDATION FILL	CU.M.	280		280
STRUCTURE BACK FILL	CU.M.			
STRUCTURE WORKS				
CAST IN PLACE BORED PILE (800mmø)	M.	240		240
PILE LOAD TEST–STATIC (800MM DIA.)	No.	1		1
STRUCTURAL CONCRETE Fcu=450 kg/cm2	CU.M.		200	200
STRUCTURAL CONCRETE Fcu=300 kg/cm2	CU.M.	170		170
REINFORCING BARS	M.T.	40	60	100
PRESTRESS CABLE	M.T.		4	4

KATAHIRA & ENGINEERS INTERNATIONAL
PRICE WATERHOUSE COOPERS ADVISORY CO., LTD.

JICA
JAPAN INTERNATIONAL COOPERATION AGENCY

GENERAL AUTHORITY FOR ROADS BRIDGES AND LAND TRANSPORT (GARBLT)
MINISTRY OF TRANSPORT
ARAB REPUBLIC OF EGYPT

PROJECT AND LOCATION :
FEASIBILITY STUDY ON
HIGH PRIORITY URBAN TOLL EXPRESSWAYS IN CAIRO
E2-2 EXPRESSWAY

SCALE : 1:150 1:120
FULL SIZE A3

DRAWING TITLE :
RC SINGLE COLUMN PIER
SINGLE PCDG DECK TYPE-1

DRAWING NO : E2-2/S-18

SHEET NO : 18 / 23

SUMMARY OF QUANTITIES - 1 PIER (P61)

DESCRIPTION	UNIT	QUANTITIES		
		FOUNDATION	PIER	TOTAL
EARTH WORKS				
STRUCTURE EXCAVATION	CU.M.	205		205
FOUNDATION FILL	CU.M.	100		100
STRUCTURE BACK FILL	CU.M.			
STRUCTURE WORKS				
CAST IN PLACE BORED PILE (800mmø)	M.	100		100
PILE LOAD TEST-STATIC (800MM DIA.)	No.	1		1
STRUCTURAL CONCRETE Fcu=450 kg/cm2	CU.M.		60	60
STRUCTURAL CONCRETE Fcu=300 kg/cm2	CU.M.	105		105
REINFORCING BARS	M.T.	25	20	45
PRESTRESS CABLE	M.T.		1	1

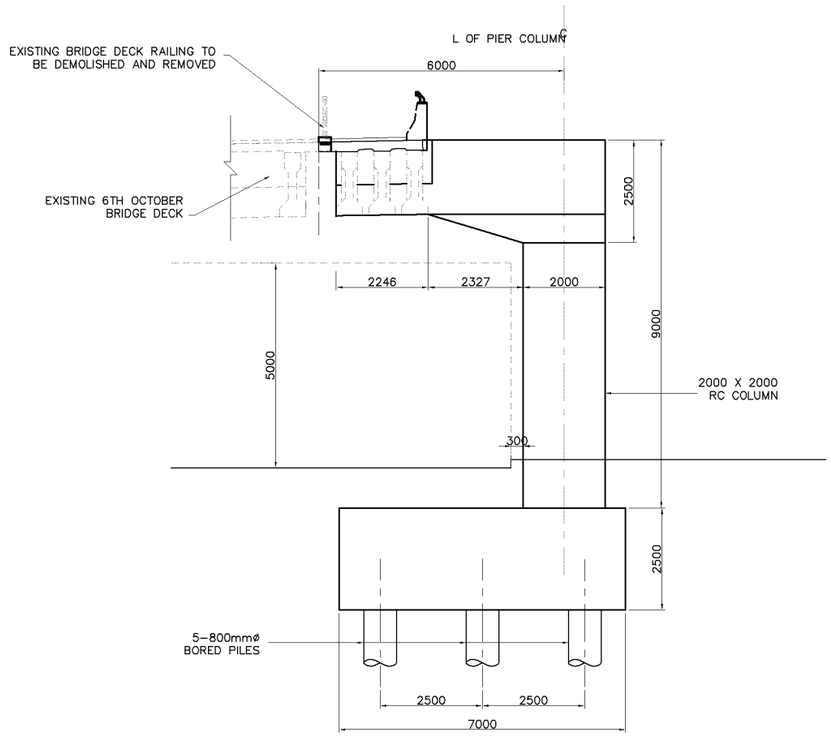

2 SCALE — RC SINGLE COLUMN PIER ELEVATION (EXPANSION) 1:150

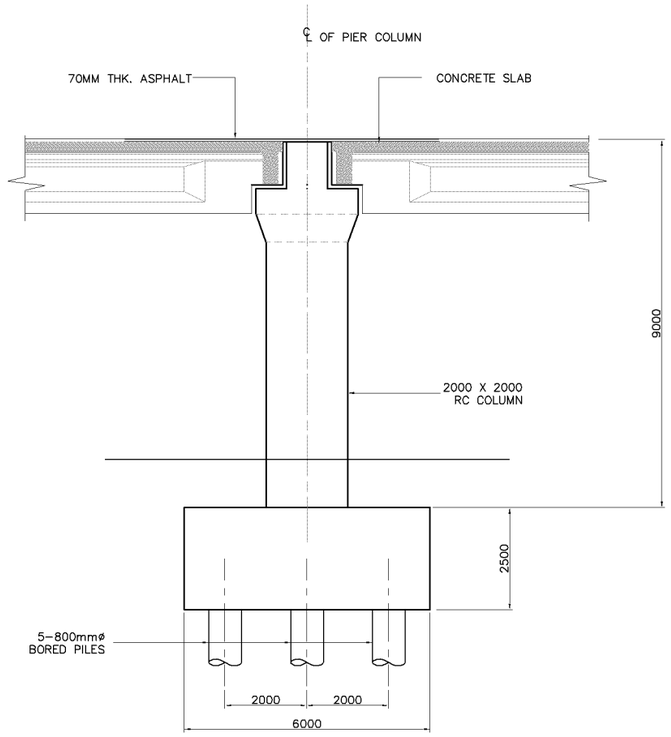

3 SCALE — SIDE ELEVATION 1:150

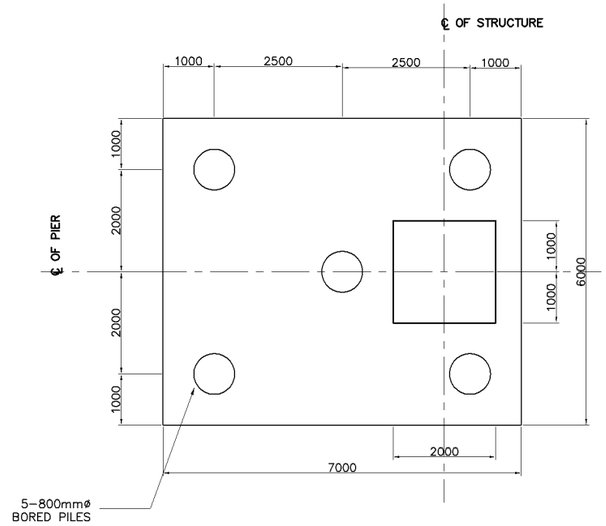

4 SCALE — PILE CAP SECTION 1:120

KATAHIRA & ENGINEERS INTERNATIONAL PRICE WATERHOUSE COOPERS ADVISORY CO., LTD.	JICA JAPAN INTERNATIONAL COOPERATION AGENCY	GENERAL AUTHORITY FOR ROADS BRIDGES AND LAND TRANSPORT (GARBLT) MINISTRY OF TRANSPORT ARAB REPUBLIC OF EGYPT	PROJECT AND LOCATION : FEASIBILITY STUDY ON HIGH PRIORITY URBAN TOLL EXPRESSWAYS IN CAIRO E2-2 EXPRESSWAY	SCALE : 1:150 1:120 FULL SIZE A3	DRAWING TITLE : RC SINGLE COLUMN PIER SINGLE PCDG DECK TYPE-2	DRAWING NO : E2-2/S-19 SHEET NO : 19 / 23

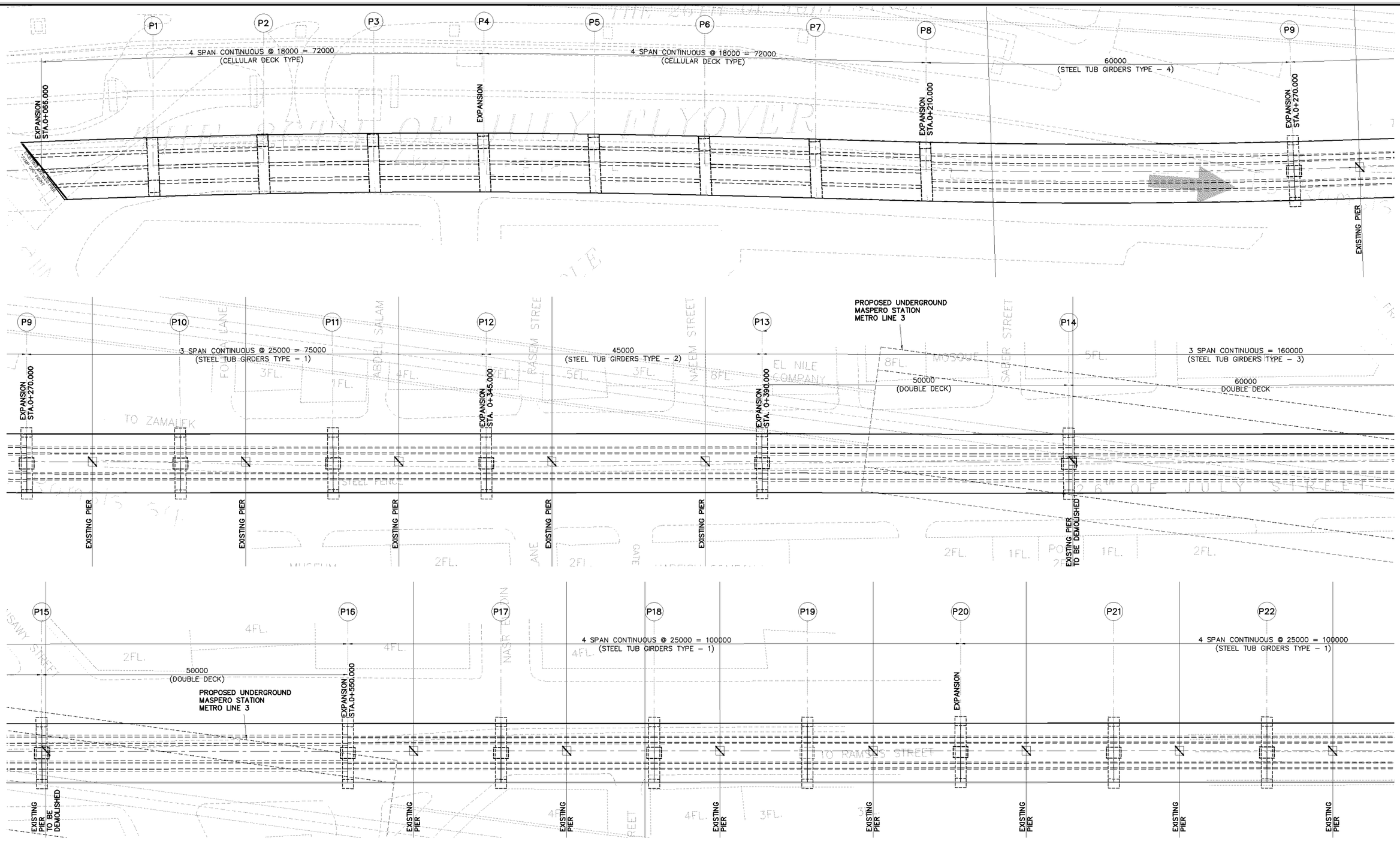

A
SCALE

SUPERSTRUCTURE LAYOUT PLAN (PIERS P1 – P22)

1:600

KATAHIRA & ENGINEERS INTERNATIONAL PRICE WATERHOUSE COOPERS ADVISORY CO., LTD.	JICA JAPAN INTERNATIONAL COOPERATION AGENCY	GENERAL AUTHORITY FOR ROADS BRIDGES AND LAND TRANSPORT (GARBLT) MINISTRY OF TRANSPORT ARAB REPUBLIC OF EGYPT	PROJECT AND LOCATION : FEASIBILITY STUDY ON HIGH PRIORITY URBAN TOLL EXPRESSWAYS IN CAIRO E2-2	SCALE : 1:600 FULL SIZE A3	DRAWING TITLE : SUPERSTRUCTURE LAYOUT AND SECTIONS (1 OF 4)	DRAWING NO : E2-2/S-20 SHEET NO : 20 / 23

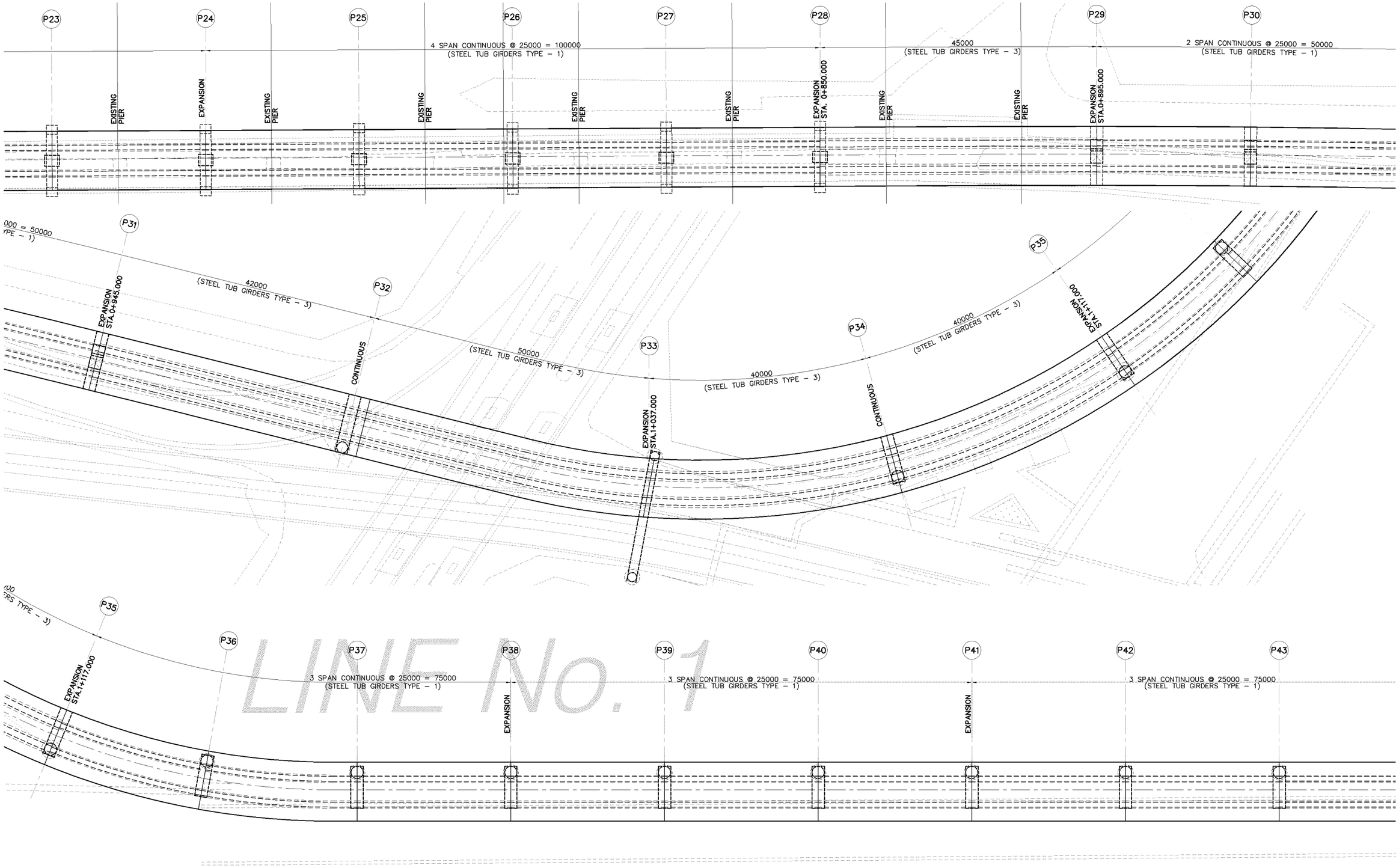

A SCALE

SUPERSTRUCTURE LAYOUT PLAN (PIERS P23 – P43)

1:600

KATAHIRA & ENGINEERS INTERNATIONAL PRICE WATERHOUSE COOPERS ADVISORY CO., LTD.	JICA JAPAN INTERNATIONAL COOPERATION AGENCY	GENERAL AUTHORITY FOR ROADS BRIDGES AND LAND TRANSPORT (GARBLT) MINISTRY OF TRANSPORT ARAB REPUBLIC OF EGYPT	PROJECT AND LOCATION : FEASIBILITY STUDY ON HIGH PRIORITY URBAN TOLL EXPRESSWAYS IN CAIRO E2-2	SCALE : 1:600 FULL SIZE A3	DRAWING TITLE : SUPERSTRUCTURE LAYOUT AND SECTIONS (2 OF 4)	DRAWING NO : E2-2/S-21 SHEET NO : 21 / 23

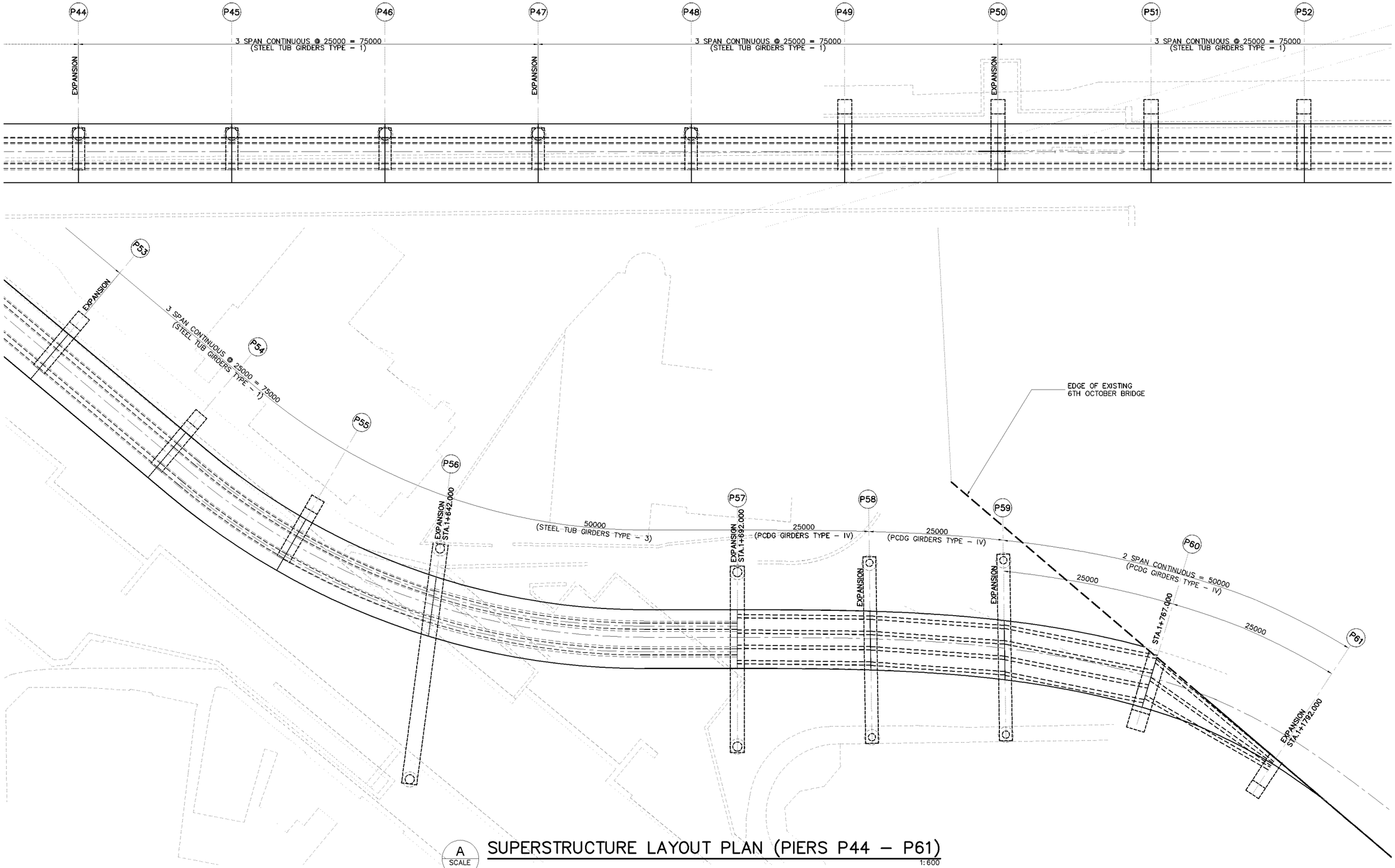

A SCALE

SUPERSTRUCTURE LAYOUT PLAN (PIERS P44 – P61)

1:600

KATAHIRA & ENGINEERS INTERNATIONAL PRICE WATERHOUSE COOPERS ADVISORY CO., LTD.	JICA JAPAN INTERNATIONAL COOPERATION AGENCY	GENERAL AUTHORITY FOR ROADS BRIDGES AND LAND TRANSPORT (GARBLT) MINISTRY OF TRANSPORT ARAB REPUBLIC OF EGYPT	PROJECT AND LOCATION : FEASIBILITY STUDY ON HIGH PRIORITY URBAN TOLL EXPRESSWAYS IN CAIRO E2-2	SCALE : 1:600 FULL SIZE A3	DRAWING TITLE : SUPERSTRUCTURE LAYOUT AND SECTIONS (3 OF 4)	DRAWING NO : E2-2/S-22 SHEET NO : 22 / 23

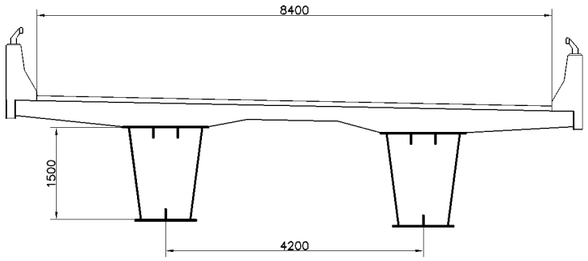

3b SCALE **TYPE – 2** 1:100

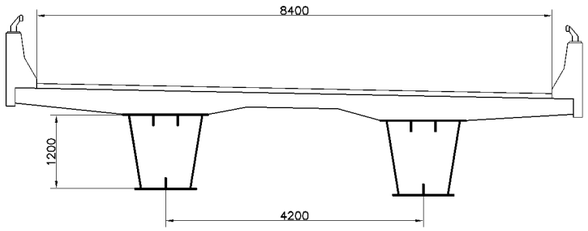

3a SCALE **TYPE – 1** 1:100

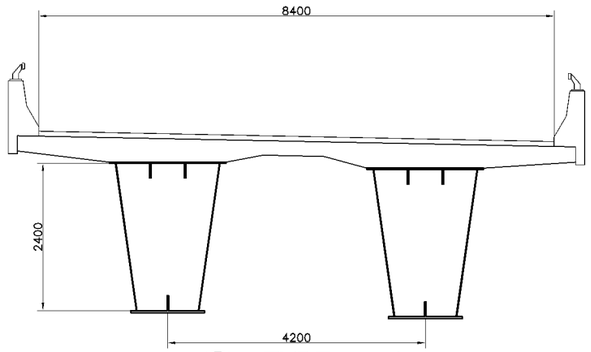

3d SCALE **TYPE – 4** 1:100

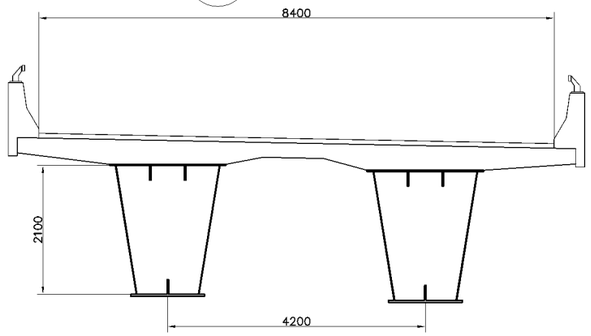

3c SCALE **TYPE – 3** 1:100

3 SCALE **STRUCTURAL STEEL TUB GIRDERS** 1:100

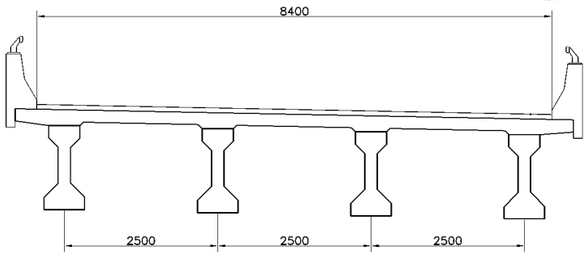

2 SCALE **PCDG TYPE – IV** 1:100

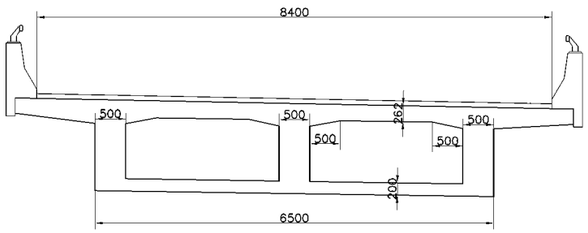

1 SCALE **CELLULAR DECK** 1:100

SUMMARY OF QUANTITIES - LENGTH - 1,727.0.00 M.

DESCRIPTION	UNIT	QUANTITIES		
		DECK		TOTAL
STRUCTURE WORKS				
STRUCTURAL CONCRETE – INSITU Fcv = 450Kg/cm²	CU.M.	1870		1870
STRUCTURAL CONCRETE – PRECAST Fcv = 450Kg/cm²	CU.M.	6325		6325
AASHTO GIRDER TYPE IV – L = 25M	NO.	15		15
REINFORCING BARS	M.T.	2045		2045
PRESTRESS CABLE	M.T.	262		262
STRUCTURAL STEEL	M.T.	2720		2720
EXPANSION JOINT	M.	330		330
BRIDGE BEARING	NO.	92		92
DECK WATERPROOFING	SQ.M.	16520		16520
BRIDGE RAILING	L.M.	3749		3749