E1-2 (6TH OF OCTOBER FLYOVER)

INDEX OF DRAWINGS
E1-2

DWG. NO.	DRAWING TITLE	SHEET NO.
ALIGMENT PLAN		
E1-2/A-01	ALIGMENT PLAN	1
LAND PLAN		
E1-2/L-01	LAND PLAN	1
ROADWAY		
E1-2/R-01	PLAN STA. 0+000 – STA. 1+700	1
E1-2/R-02	PROFILE STA. 0+000 – STA. 1+700	2
E1-2/R-03	PLAN STA. 1+700 – STA. 3+400	3
E1-2/R-04	PROFILE STA. 1+700 – STA. 3+400	4
E1-2/R-05	PLAN STA. 3+400 – STA. 5+000	5
E1-2/R-06	PROFILE STA. 3+400 – STA. 5+000	6
E1-2/R-07	PROFILE STA. 5+000 – STA. 5+500	7
E1-2/R-08	TYPICAL ROAD SECTION	8
E1-2/R-09	CROSS SECTION (1/4)	9
E1-2/R-10	CROSS SECTION (2/4)	10
E1-2/R-11	CROSS SECTION (3/4)	11
E1-2/R-12	CROSS SECTION (4/4)	12
E1-2/R-13	ON / OFF RAMP NO. 1 PLAN AND PROFILE (2+990 – 3+800)	13
E1-2/R-14	ON / OFF RAMP NO. 1 SECTION (2+990 – 3+800)	14
STRUCTURES		
E1-2/S-01	E1-2 OVERALL PLAN & LAYOUT	1
E1-2/S-02	MAIN RAMP FROM 6TH OCTOBER BRIDGE PIER LAYOUT & SECTIONS (STA. 0+155 – STA. 0+205)	2
E1-2/S-03	MAIN RAMP FROM 6TH OCTOBER BRIDGE SUPERSTRUCTURE LAYOUT & SECTIONS (STA. 0+130 – STA. 0+230)	3
E1-2/S-04	MAIN RAMP FROM 6TH OCTOBER BRIDGE ABUTMENT LAYOUT & SECTIONS (STA. 0+230)	4
E1-2/S-05	MAIN RAMP FROM 6TH OCTOBER BRIDGE APPROACH EMBANKMENT LAYOUT AND RETAINING WALL DETAIL	5
E1-2/S-06	TRANSITION STRUCTURE SECTIONS (STA. 0+307 – STA. 0+414)	6
E1-2/S-07	CUT & COVER TUNNEL SECTIONS (STA. 0+441 – STA. 0+669)	7
E1-2/S-08	SIDE RAMPS PIER LAYOUT & SECTIONS (STA. 0+155 – STA. 0+205) 1 OF 8	8
E1-2/S-09	SIDE RAMPS PIER LAYOUT & SECTIONS (STA. 0+230 – STA. 0+299) 2 OF 8	9
E1-2/S-10	SIDE RAMPS PIER LAYOUT & SECTIONS (STA. 0+322) 3 OF 8	10
E1-2/S-11	SIDE RAMPS PIER LAYOUT & SECTIONS (STA. 0+345 – STA. 0+391) 4 OF 8	11
E1-2/S-12	SIDE RAMPS PIER LAYOUT & SECTIONS (STA. 0+414) 5 OF 8	12
E1-2/S-13	SIDE RAMPS PIER LAYOUT & SECTIONS (STA. 0+441) 6 OF 8	13
E1-2/S-14	SIDE RAMPS PIER LAYOUT & SECTIONS (STA. 0+465 – STA. 0+547) 7 OF 8	14
E1-2/S-15	SIDE RAMPS PIER LAYOUT & SECTIONS (STA. 0+567 – STA. 0+670) 8 OF 8	15
E1-2/S-16	EASTBOUND SIDE RAMPS SUPERSTRUCTURE LAYOUT & SECTIONS (STA. 0+130 – STA. 0+465) 1 OF 2	16
E1-2/S-17	WESTBOUND SIDE RAMPS SUPERSTRUCTURE LAYOUT & SECTIONS (STA. 0+130 – STA. 0+465) 2 OF 2	17
E1-2/S-18	CUT & COVER TUNNEL SECTIONS WITH PSC PLANKS (STA. 0+415 – STA. 0+441)	18
E1-2/S-19	TREATMENT AT EXISTING 6TH OCTOBER BRIDGE – COMPLETE & PARTIAL DEMOLITION (1 OF 2)	19
E1-2/S-20	TREATMENT AT EXISTING 6TH OCTOBER BRIDGE – WIDENING PORTION & CURVED RAMPS (2 OF 2)	20
E1-2/S-21	CUT & COVER TUNNEL INBOUND SECTIONS (STA. 2+900 – STA. 2+975)	21
E1-2/S-22	CUT & COVER TUNNEL OUTBOUND SECTIONS (STA. 3+300 – STA. 3+425)	22
E1-2/S-23	TRANSITION STRUCTURE INBOUND SECTIONS (STA. 2+975 – STA. 3+130)	23
E1-2/S-24	TRANSITION STRUCTURE OUTBOUND SECTIONS (STA. 3+425 – STA. 3+580)	24
E1-2/S-25	INBOUND ON-RAMP APPROACH EMBANKMENT LAYOUT, STUB WALL DETAIL, AND TOLL BOOTH SECTION	25
E1-2/S-26	VIADUCT INBOUND ABUTMENT LAYOUT & SECTIONS (STA. 3+225)	26
E1-2/S-27	VIADUCT INBOUND PIER LAYOUT & SECTIONS – P1 TO P42	27
E1-2/S-28	VIADUCT INBOUND PIER LAYOUT & SECTIONS – P43 & P56 (EXPANSION)	28
E1-2/S-29	VIADUCT INBOUND PIER LAYOUT & SECTIONS – P44 TO P55 (CONTINUOUS / EXPANSION)	29
E1-2/S-30	VIADUCT INBOUND PIER LAYOUT & SECTIONS – P57 & P59 (EXPANSION)	30
E1-2/S-31	VIADUCT INBOUND PORTAL PIER LAYOUT & SECTIONS – P58 (EXPANSION)	31
E1-2/S-32	VIADUCT INBOUND PIER LAYOUT & SECTIONS – P60 TO P64 (CONTINUOUS / EXPANSION)	32
E1-2/S-33	VIADUCT INBOUND PIER LAYOUT & SECTIONS – P65 TO P68 (CONTINUOUS / EXPANSION)	33
E1-2/S-34	VIADUCT INBOUND PIER LAYOUT & SECTIONS – P69 TO P80 (CONTINUOUS / EXPANSION)	34
E1-2/S-35	VIADUCT INBOUND PIER LAYOUT & SECTIONS – P81 & P82 (CONTINUOUS / EXPANSION)	35
E1-2/S-36	VIADUCT INBOUND PIER LAYOUT & SECTIONS – P83 & P86 (CONTINUOUS / EXPANSION)	36
E1-2/S-37	VIADUCT INBOUND PIER LAYOUT & SECTIONS – P87	37
E1-2/S-38	VIADUCT INBOUND SUPERSTRUCTURE LAYOUT & SECTIONS (STA. 3+225 – STA. 5+557) 1 OF 3	38
E1-2/S-39	VIADUCT INBOUND SUPERSTRUCTURE LAYOUT & SECTIONS (STA. 3+225 – STA. 5+557) 2 OF 3	39
E1-2/S-40	VIADUCT INBOUND SUPERSTRUCTURE LAYOUT & SECTIONS (STA. 3+225 – STA. 5+557) 3 OF 3	40
E1-2/S-41	OFF-RAMP / VIADUCT OUTBOUND APPROACH EMBANKMENT LAYOUT, STUB WALL, AND RETAINING WALL DETAIL	41
E1-2/S-42	VIADUCT OUTBOUND ABUTMENT LAYOUT & SECTIONS (STA. 3+670)	42
E1-2/S-43	VIADUCT OUTBOUND PIER LAYOUT & SECTIONS – P1 & P27 (CONTINUOUS / EXPANSION)	43
E1-2/S-44	VIADUCT OUTBOUND PIER LAYOUT & SECTIONS – P28	44
E1-2/S-45	VIADUCT OUTBOUND PIER LAYOUT & SECTIONS – P29 – P40 (CONTINUOUS / EXPANSION)	45
E1-2/S-46	VIADUCT OUTBOUND PIER LAYOUT & SECTIONS – P41 – P42 (CONTINUOUS / EXPANSION)	46
E1-2/S-47	VIADUCT OUTBOUND SUPERSTRUCTURE LAYOUT & SECTIONS (STA. 3+670 – STA. 4+720) 1 OF 2	47
E1-2/S-48	VIADUCT OUTBOUND SUPERSTRUCTURE LAYOUT & SECTIONS (STA. 3+670 – STA. 4+720) 2 OF 2	48

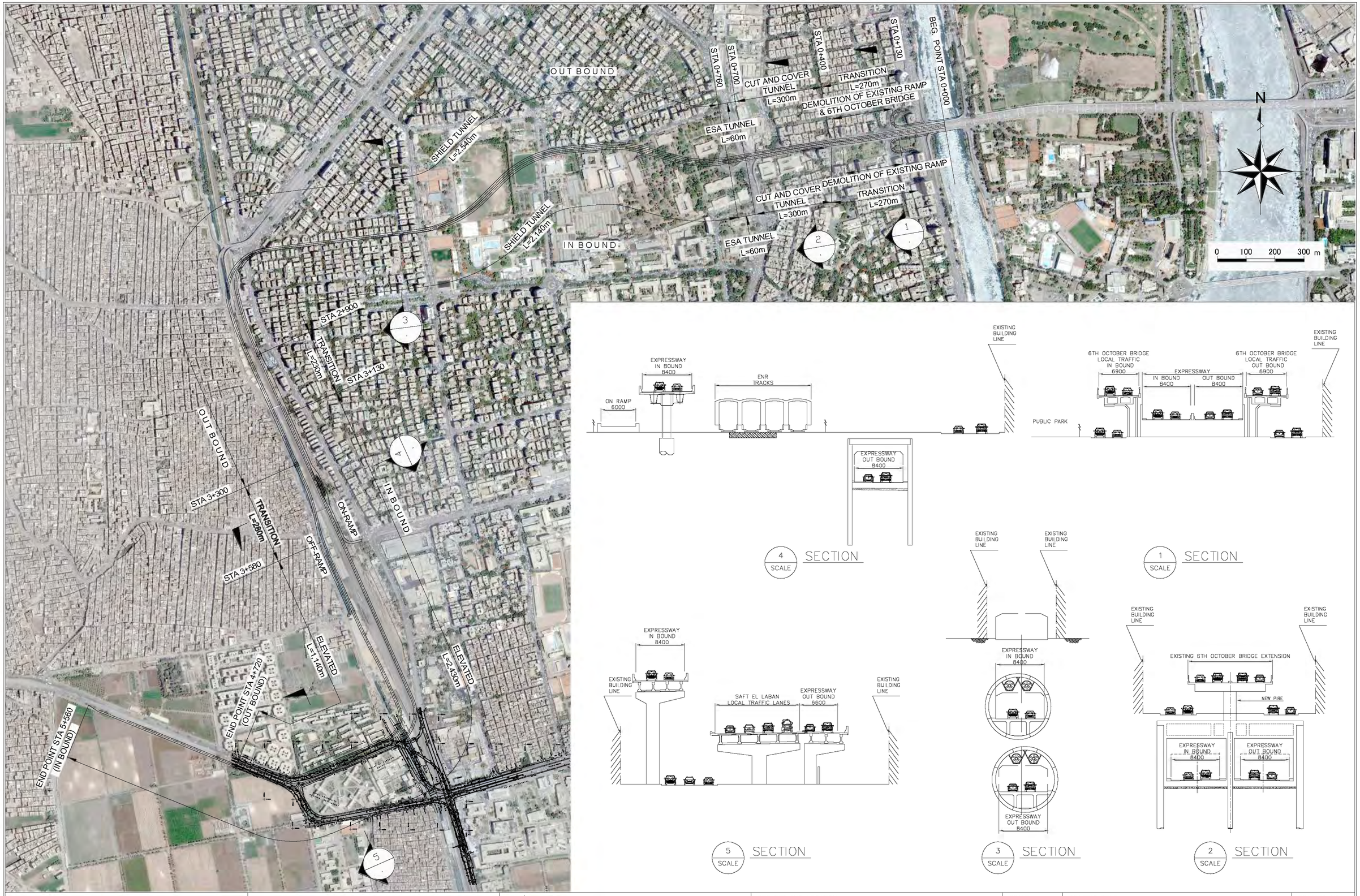

KATAHIRA & ENGINEERS INTERNATIONAL
PRICE WATERHOUSE COOPERS ADVISORY CO., LTD.

JICA
JAPAN INTERNATIONAL COOPERATION AGENCY

GENERAL AUTHORITY FOR ROADS BRIDGES AND LAND TRANSPORT (GARBLT)
MINISTRY OF TRANSPORT
ARAB REPUBLIC OF EGYPT

PROJECT AND LOCATION :	SCALE :	DRAWING TITLE :	DRAWING NO :
FEASIBILITY STUDY ON HIGH PRIORITY URBAN TOLL EXPRESSWAYS IN CAIRO E1-2	1:4000	E1-2 Alignment PLAN Sta. 0+000 - Sta. 5+560	E1-2/A-01
	FULL SIZE A0		SHEET NO : 1/1

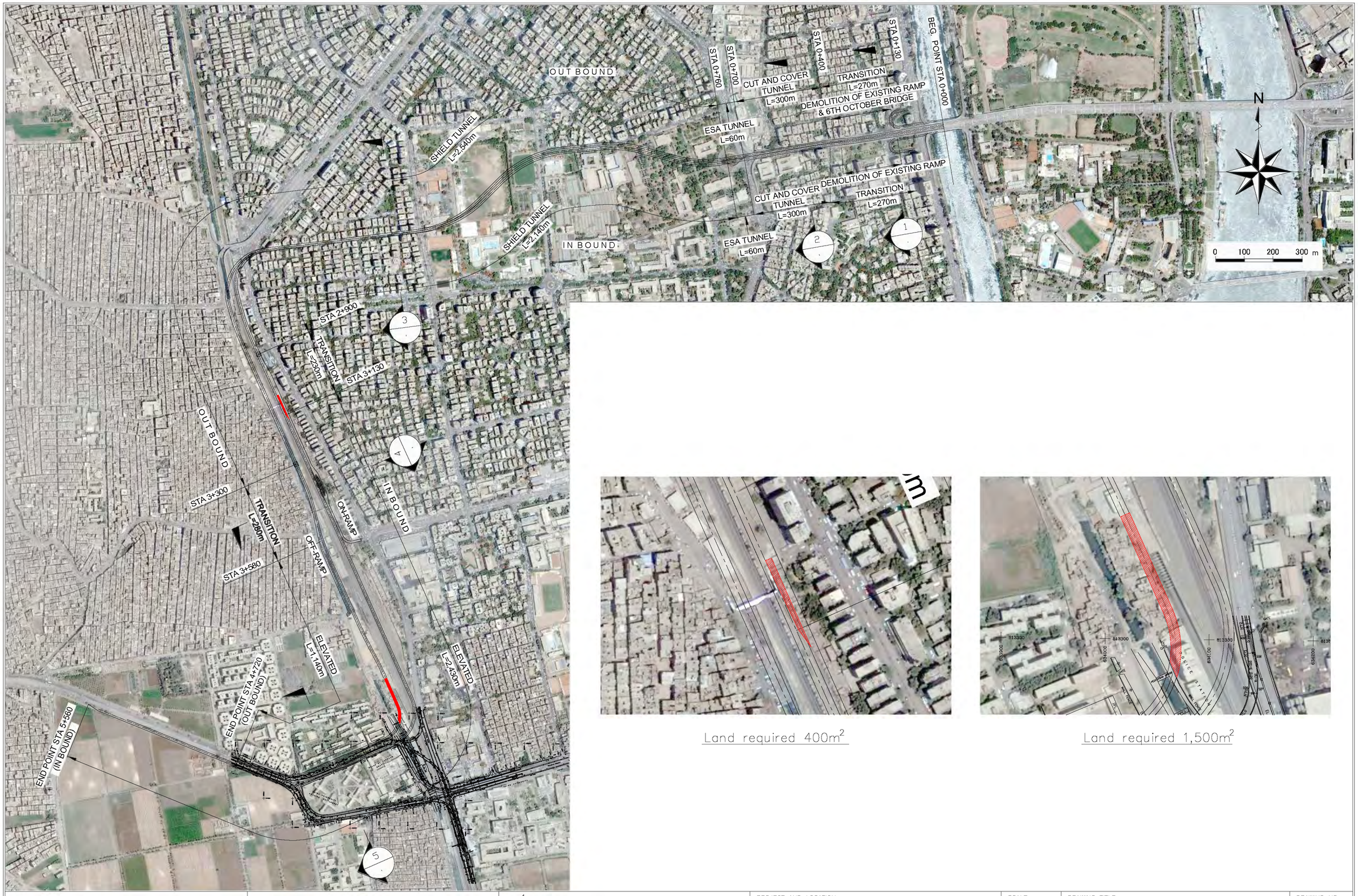

Land required 400m^2

Land required 1,500m^2

KATAHIRA & ENGINEERS INTERNATIONAL PRICE WATERHOUSE COOPERS ADVISORY CO., LTD.	JICA JAPAN INTERNATIONAL COOPERATION AGENCY	GENERAL AUTHORITY FOR ROADS BRIDGES AND LAND TRANSPORT (GARBLT) MINISTRY OF TRANSPORT ARAB REPUBLIC OF EGYPT	PROJECT AND LOCATION : FEASIBILITY STUDY ON HIGH PRIORITY URBAN TOLL EXPRESSWAYS IN CAIRO E1-2	SCALE : 1:4000 FULL SIZE A0	DRAWING TITLE : E1-2 LAND PLAN

DRAWING NO : E1-2/L-01

SHEET NO : 1/1

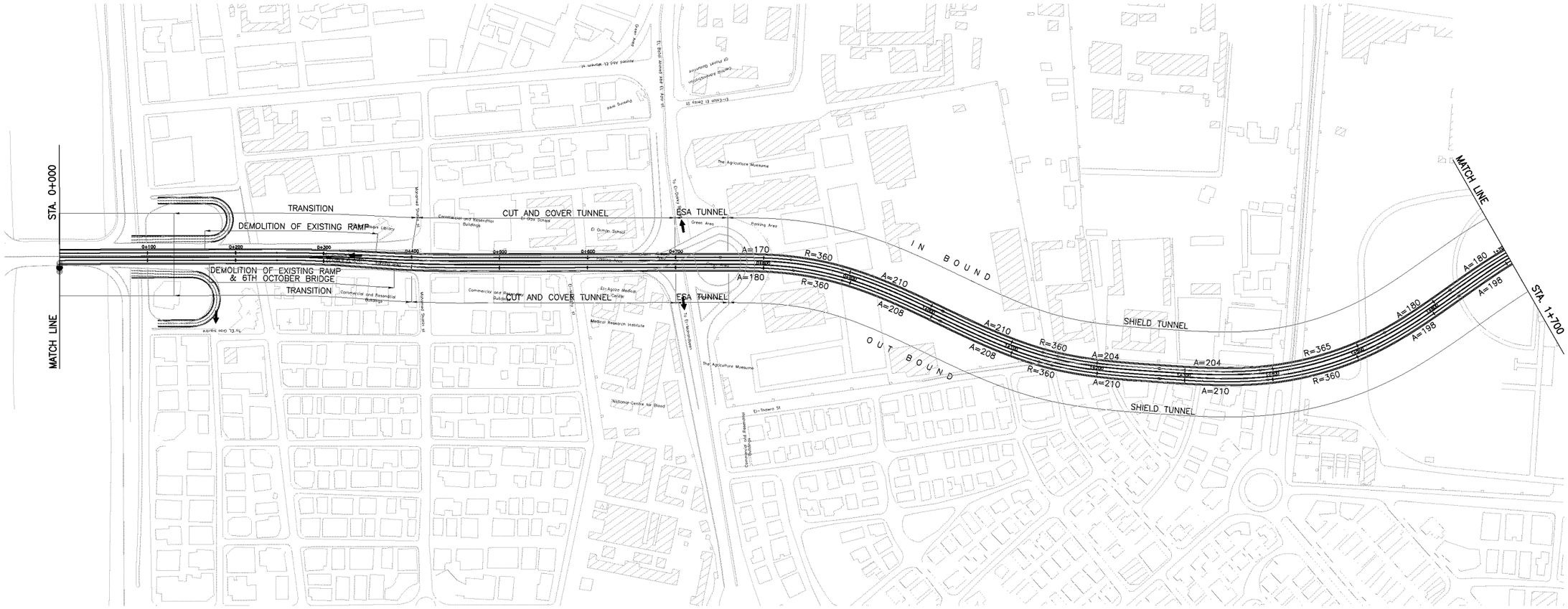

KATAHIRA & ENGINEERS INTERNATIONAL PRICE WATERHOUSE COOPERS ADVISORY CO., LTD.	JICA JAPAN INTERNATIONAL COOPERATION AGENCY	GENERAL AUTHORITY FOR ROADS BRIDGES AND LAND TRANSPORT (GARBLT) MINISTRY OF TRANSPORT ARAB REPUBLIC OF EGYPT	PROJECT AND LOCATION : FEASIBILITY STUDY ON HIGH PRIORITY URBAN TOLL EXPRESSWAYS IN CAIRO E1-2	SCALE : H = 1/5000 V = 1/500 FULL SIZE A3	DRAWING TITLE : E1-2 PLAN Sta. 0+000 - Sta. 1+700	DRAWING NO : E1-2/R-01 SHEET NO : 1 / 14

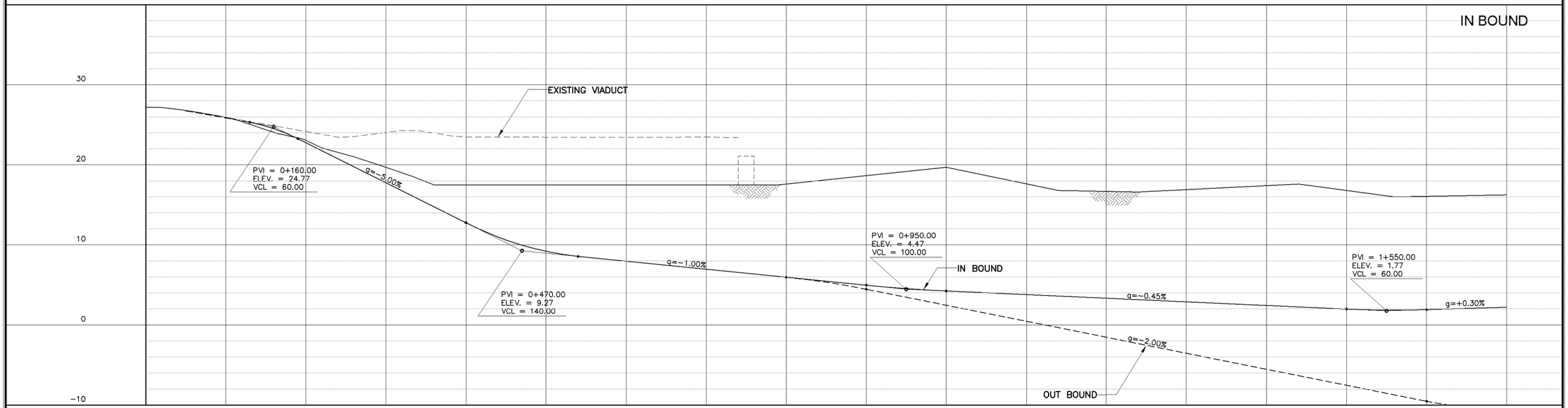

STATION	0+000	0+100	0+200	0+300	0+400	0+500	0+600	0+700	0+800	0+900	1+000	1+100	1+200	1+300	1+400	1+500	1+600	1+700
FINISHED GRADE			22.77	17.77	12.77	8.97	7.97	6.97	5.97	4.64	4.25	3.80	3.35	2.90	2.45	2.00	1.92	2.22
ORIGINAL GRADE	27.17	25.94							17.60	18.65	19.70	17.63	16.68	16.90	17.40	16.80	16.07	16.24

HORIZONTAL CURVATURE: R=∞ | A=96.80 R=234.00 A=96.80 | R=234.00 | A=96.80 A=96.80 | R=∞ | A=170.00 R=360.00 A=210.00 | A=210.00 R=360.00 A=204.00 A=204.00 R=365.00 A=180.00 | A=180.00

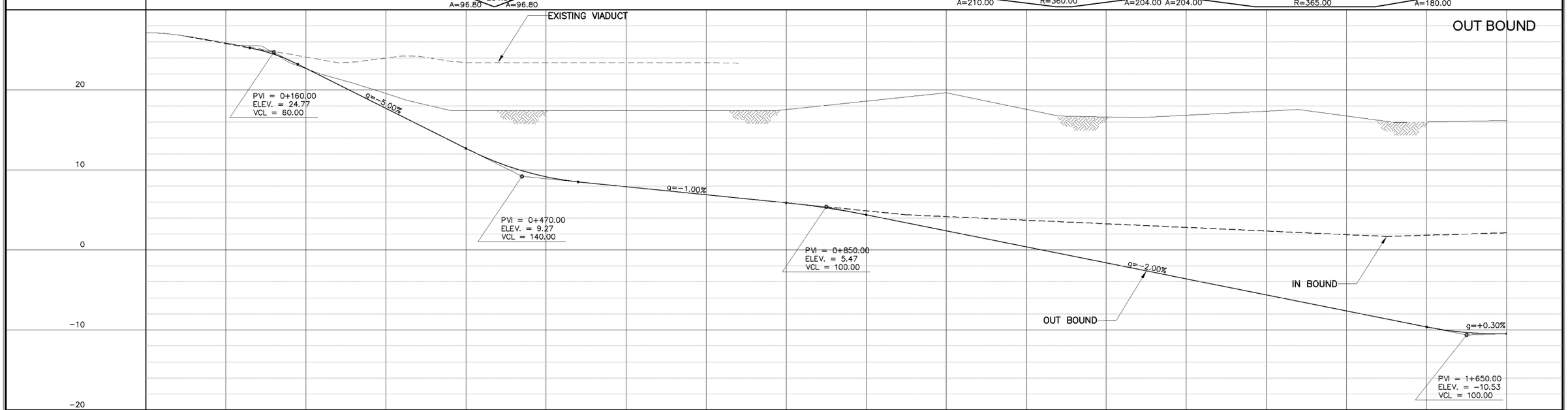

STATION	0+000	0+100	0+200	0+300	0+400	0+500	0+600	0+700	0+800	0+900	1+000	1+100	1+200	1+300	1+400	1+500	1+600	1+700
FINISHED GRADE			22.77	17.77	12.77	9.10	7.97	6.97	5.97	4.47	2.47	0.47	−1.53	−3.53	−5.53	−7.53	−9.53	−10.38
ORIGINAL GRADE	27.17	25.94	22.72	19.63	17.50	17.50	17.50	17.50	17.60	18.65	19.70	17.63	16.68	16.90	17.40	16.80	16.07	16.24

HORIZONTAL CURVATURE: R=∞ | R=5280.00 R=5280.00 | R=∞ | A=180.00 R=360.00 A=208.00 | A=208.00 R=360.00 A=210.00 A=210.00 R=360.00 A=198.00 | A=198.00

KATAHIRA & ENGINEERS INTERNATIONAL
PRICE WATERHOUSE COOPERS ADVISORY CO., LTD.

JAPAN INTERNATIONAL COOPERATION AGENCY

GENERAL AUTHORITY FOR ROADS BRIDGES AND LAND TRANSPORT (GARBLT)
MINISTRY OF TRANSPORT
ARAB REPUBLIC OF EGYPT

PROJECT AND LOCATION :	SCALE :	DRAWING TITLE :	DRAWING NO :
FEASIBILITY STUDY ON HIGH PRIORITY URBAN TOLL EXPRESSWAYS IN CAIRO E1-2	H = 1/5,000 V = 1/500 FULL SIZE A3	E1-2 PROFILE sta. 0+000 - Sta. 1+700	E1-2/R-02 SHEET NO : 2 /14

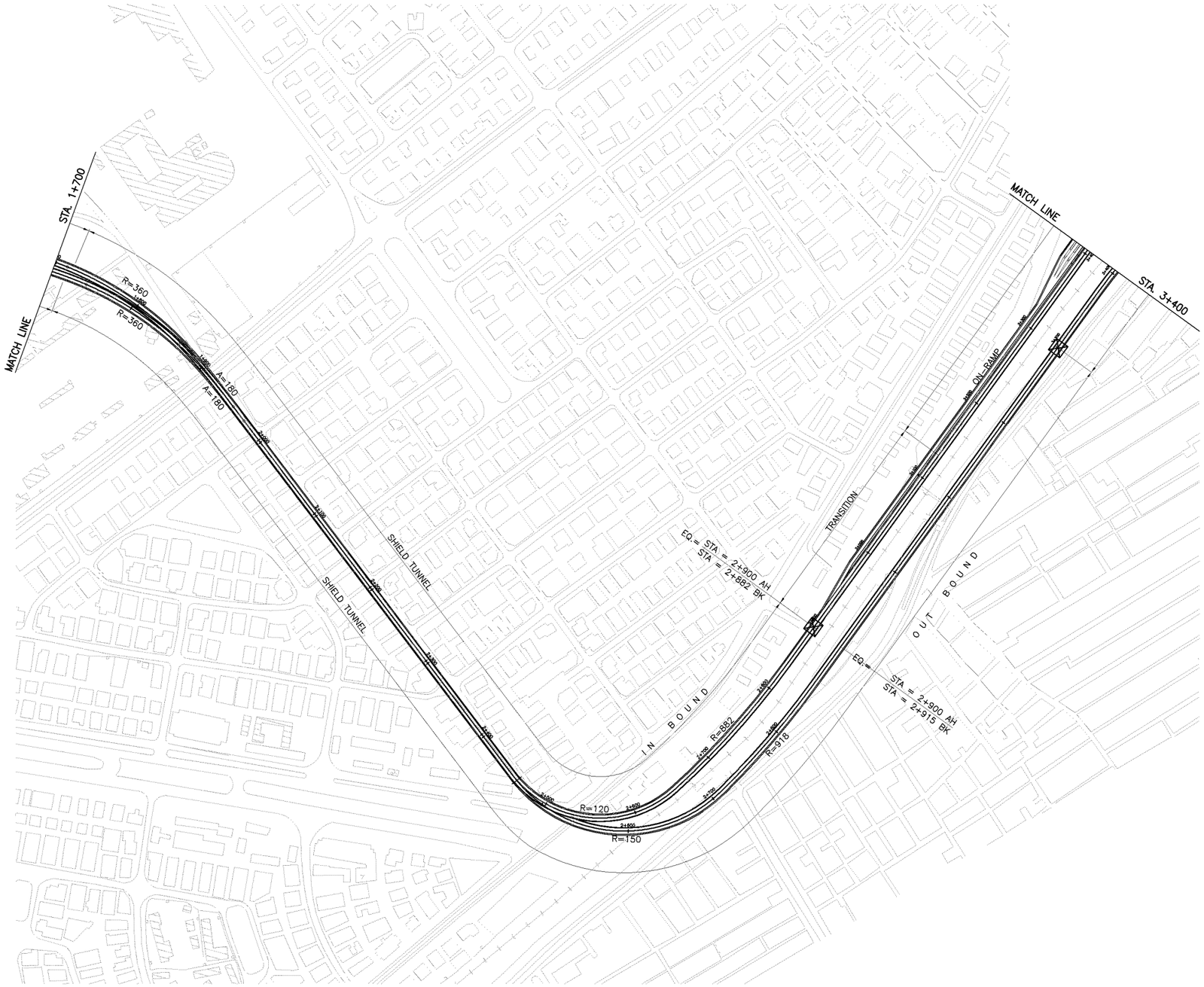

KATAHIRA & ENGINEERS INTERNATIONAL PRICE WATERHOUSE COOPERS ADVISORY CO., LTD.	JICA JAPAN INTERNATIONAL COOPERATION AGENCY	GENERAL AUTHORITY FOR ROADS BRIDGES AND LAND TRANSPORT (GARBLT) MINISTRY OF TRANSPORT ARAB REPUBLIC OF EGYPT	PROJECT AND LOCATION : FEASIBILITY STUDY ON HIGH PRIORITY URBAN TOLL EXPRESSWAYS IN CAIRO E1-2	SCALE : H = 1/5000 V = 1/500 FULL SIZE A3	DRAWING TITLE : E1-2 PLAN Sta. 1+700 - Sta. 3+400	DRAWING NO : E1-2/R-03 SHEET NO : 3 / 14

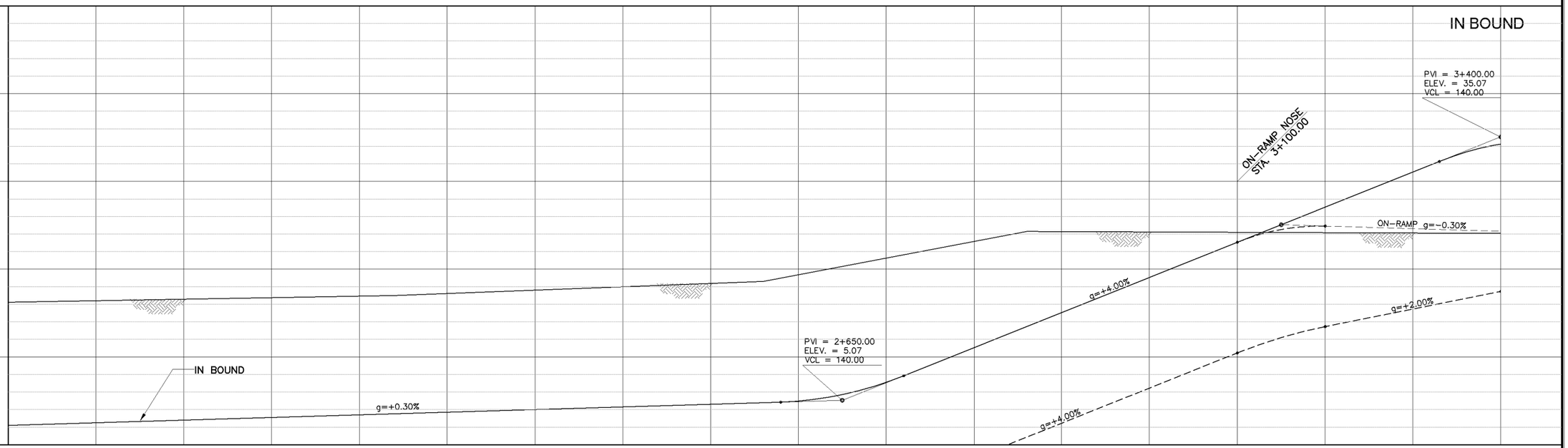

STATION	1+700	1+800	1+900	2+000	2+100	2+200	2+300	2+400	2+500	2+600	2+700	2+800	2+900	3+000	3+100	3+200	3+300	3+400
FINISHED GRADE	2.22	2.52	2.82	3.12	3.42	3.72	4.02	4.32	4.62	4.92	7.07	11.07	15.07	19.07	23.07	27.07	31.07	34.26
ORIGINAL GRADE	16.24	16.41	16.59	16.76	16.93	17.23	17.61	17.99	18.37	19.36	21.26	23.16	24.29	24.25	24.25	24.17	24.14	24.10

HORIZONTAL CURVATURE: R=360.00; A=180.00; R=∞; A=65.00; R=100.00; AE=80.00; R=825.00; A=230.00; R=∞

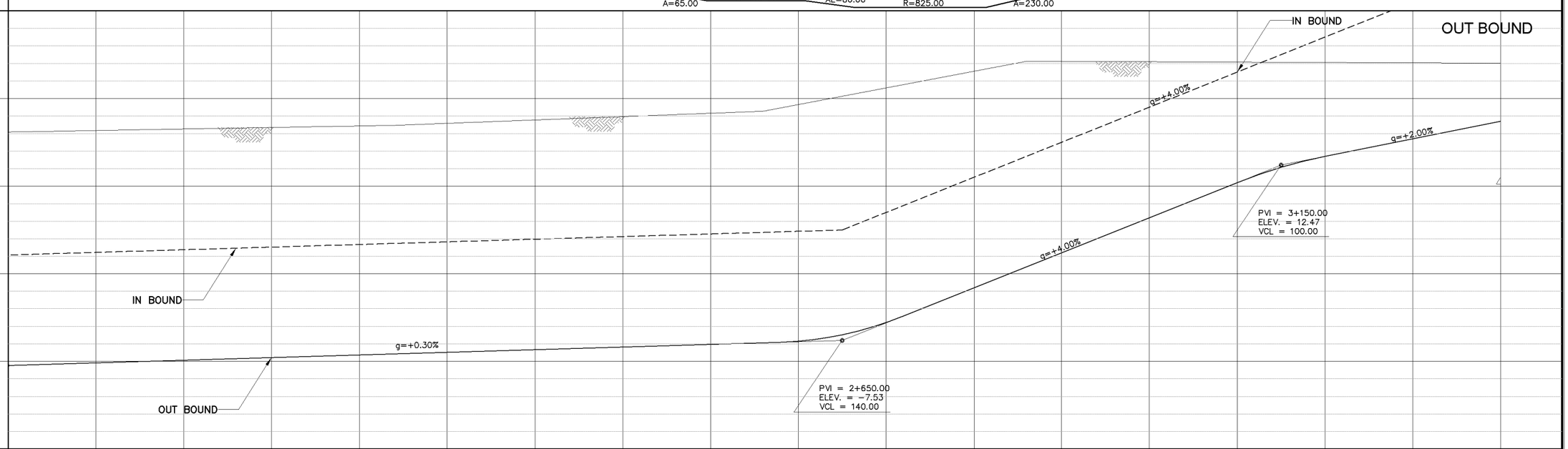

STATION	1+700	1+800	1+900	2+000	2+100	2+200	2+300	2+400	2+500	2+600	2+700	2+800	2+900	3+000	3+100	3+200	3+300	3+400
FINISHED GRADE	-10.38 -10.38	-10.08	-9.78	-9.48	-9.18	-8.88	-8.58	-8.28	-7.98	-7.63	-5.47	-1.53	2.47	6.47	10.47	13.47	15.47	17.47 17.47
ORIGINAL GRADE	16.24 16.24	16.41	16.59	16.76	16.93	17.23	17.61	17.99	18.37	19.36	21.26	23.16	24.29	24.25	24.25	24.17	24.14	24.10 24.10

HORIZONTAL CURVATURE: R=360.00; A=180.00; R=∞; A=75.00; R=125.00; AE=80.00; R=825.00; A=230.00; R=∞

KATAHIRA & ENGINEERS INTERNATIONAL
PRICE WATERHOUSE COOPERS ADVISORY CO., LTD.

JICA
JAPAN INTERNATIONAL COOPERATION AGENCY

GENERAL AUTHORITY FOR ROADS BRIDGES AND LAND TRANSPORT (GARBLT)
MINISTRY OF TRANSPORT
ARAB REPUBLIC OF EGYPT

PROJECT AND LOCATION :
FEASIBILITY STUDY ON
HIGH PRIORITY URBAN TOLL EXPRESSWAYS IN CAIRO
E1-2

SCALE :
H = 1/5,000
V = 1/500
FULL SIZE A3

DRAWING TITLE :
E1-2
PROFILE
Sta. 1+700 - Sta. 3+400

DRAWING NO : E1-2/R-04

SHEET NO : 4 / 14

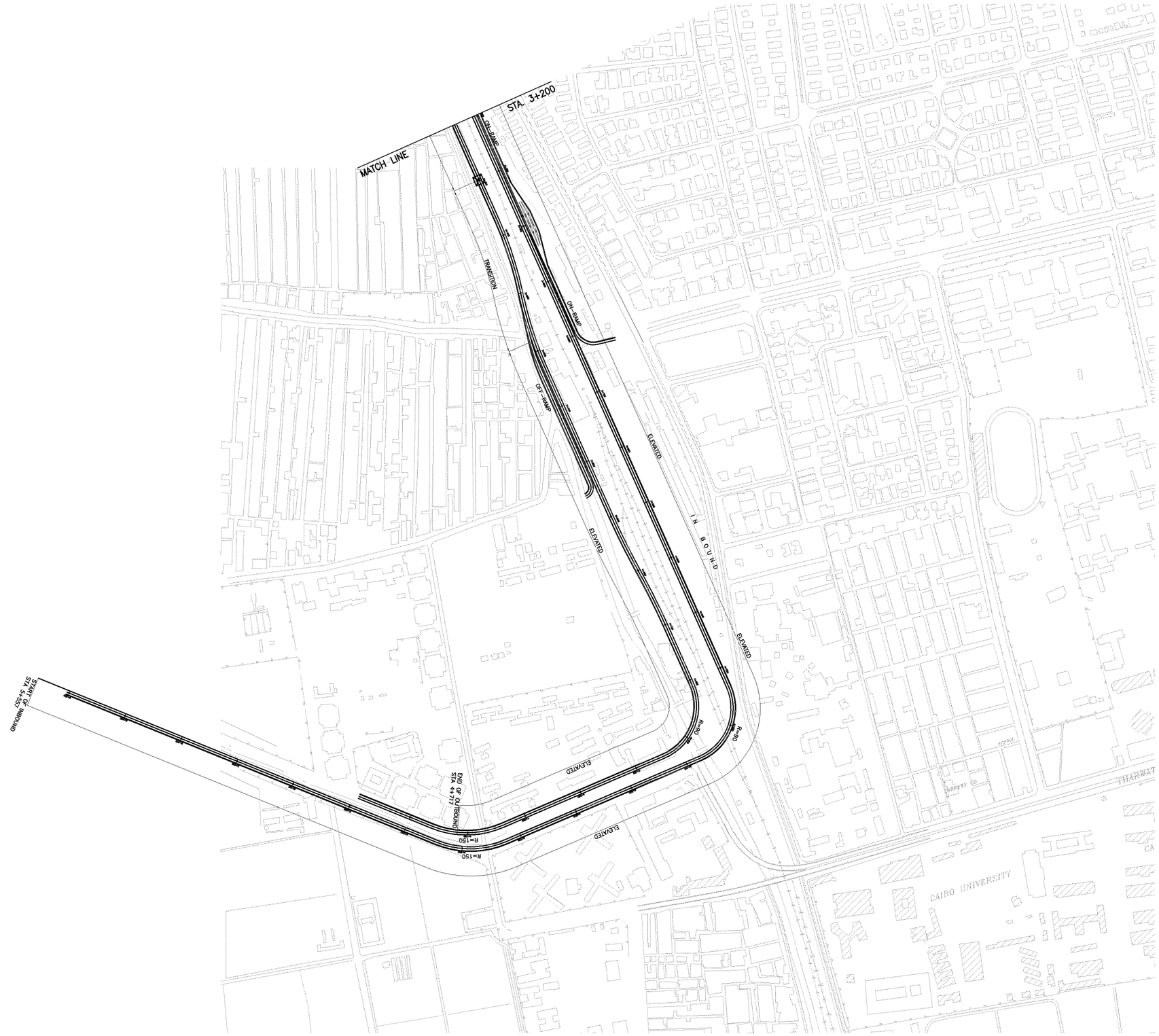

KATAHIRA & ENGINEERS INTERNATIONAL PRICE WATERHOUSE COOPERS ADVISORY CO., LTD.	JICA JAPAN INTERNATIONAL COOPERATION AGENCY	GENERAL AUTHORITY FOR ROADS BRIDGES AND LAND TRANSPORT (GARBLT) MINISTRY OF TRANSPORT ARAB REPUBLIC OF EGYPT	PROJECT AND LOCATION : FEASIBILITY STUDY ON HIGH PRIORITY URBAN TOLL EXPRESSWAYS IN CAIRO E1-2	SCALE : H = 1/5000 V = 1/500 FULL SIZE A3	DRAWING TITLE : E1-2 PLAN Sta. 3+400 - 5+560	DRAWING NO : E1-2/R-05 SHEET NO : 5 / 14

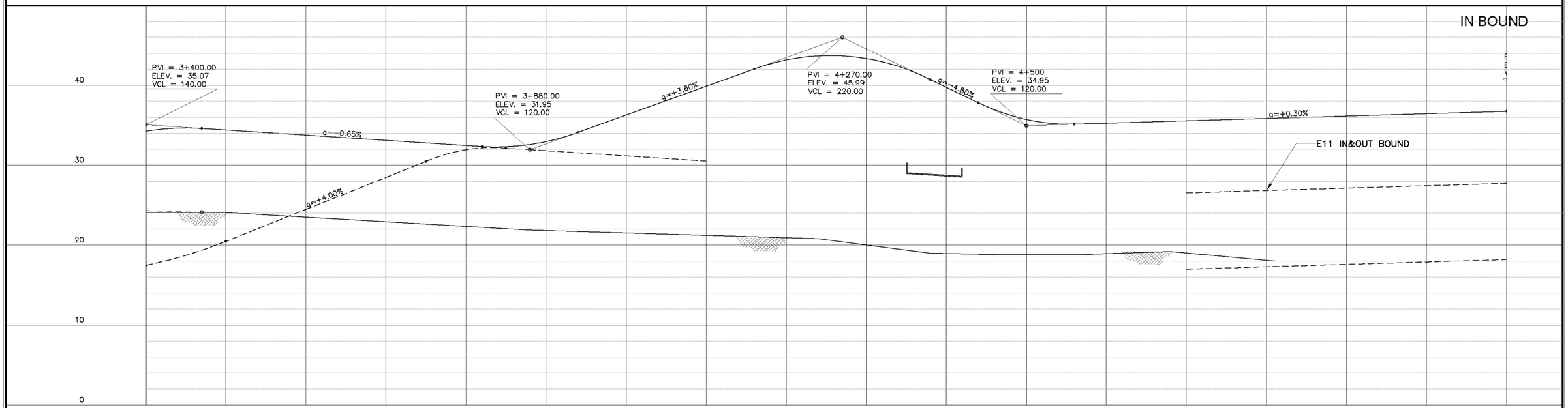

STATION	3+400	3+500	3+600	3+700	3+800	3+900	4+000	4+100	4+200	4+300	4+400	4+500	4+600	4+700	4+800	4+900	5+000	5+100
FINISHED GRADE	34.26	34.42	33.77	33.12	32.47	32.95	36.27	39.87	43.18	43.33	39.75	35.715	35.25	35.55	35.85	36.15	36.45	36.74
ORIGINAL GRADE	24.10	24.10	23.52	22.94	22.36	21.84	21.53	21.23	20.92	20.03	18.96	18.80	18.93	19.02	18.11			
HORIZONTAL CURVATURE				R=∞					A=80.00	R=100.00	A=80.00		R=∞	A=60.00	R=90.00	A=60.00		

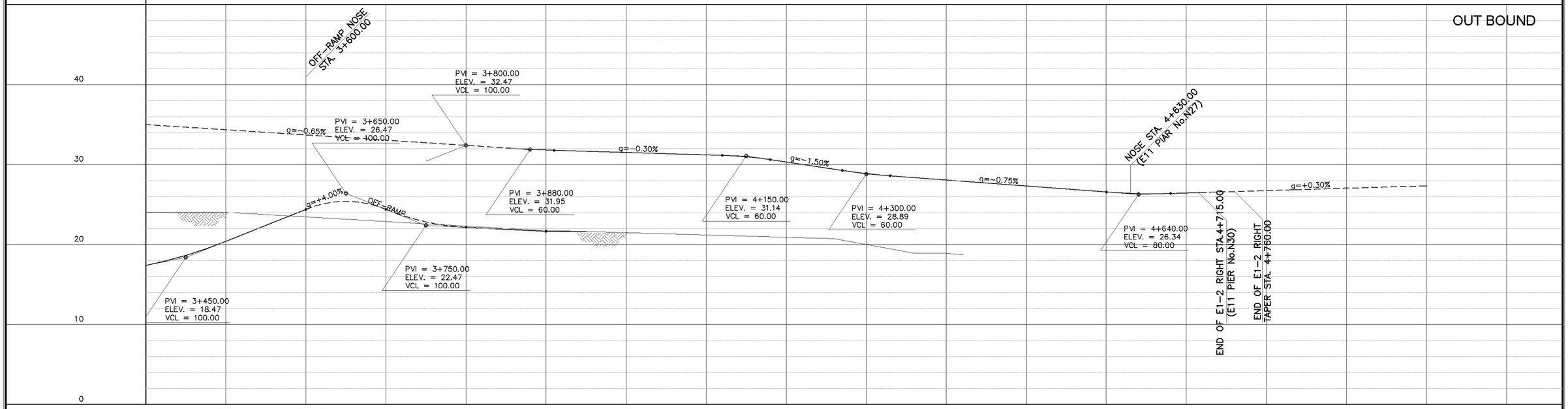

STATION	3+400	3+500	3+600	3+700	3+800	3+900	4+000	4+100	4+200	4+300	4+400	4+500	4+600	4+700	4+800	4+900	5+000
FINISHED GRADE	17.47 17.47	20.47	24.47	28.47	31.93	31.82	31.59	31.29	30.39	28.95	28.14	27.39	26.64	26.52			
ORIGINAL GRADE	24.10 24.10	24.10	23.52	22.94	22.36	21.84	21.53	21.23	20.92	20.03	18.96						
HORIZONTAL CURVATURE					R=∞				A=70.00	R=90.00	A=70.00		R=∞	A=75.00	R=150.00	A=75.00	

KATAHIRA & ENGINEERS INTERNATIONAL
PRICE WATERHOUSE COOPERS ADVISORY CO., LTD.

JICA
JAPAN INTERNATIONAL COOPERATION AGENCY

GENERAL AUTHORITY FOR ROADS BRIDGES AND LAND TRANSPORT (GARBLT)
MINISTRY OF TRANSPORT
ARAB REPUBLIC OF EGYPT

PROJECT AND LOCATION :
FEASIBILITY STUDY ON
HIGH PRIORITY URBAN TOLL EXPRESSWAYS IN CAIRO
E1-2

SCALE :
H = 1/5,000
V = 1/500
FULL SIZE A3

DRAWING TITLE :
E1-2
PROFILE
Sta. 3+400-5+000 IN BOUND
Sta. 3+400-4+760 OUT BOUND

DRAWING NO : E1-2/R-06

SHEET NO : 6/14

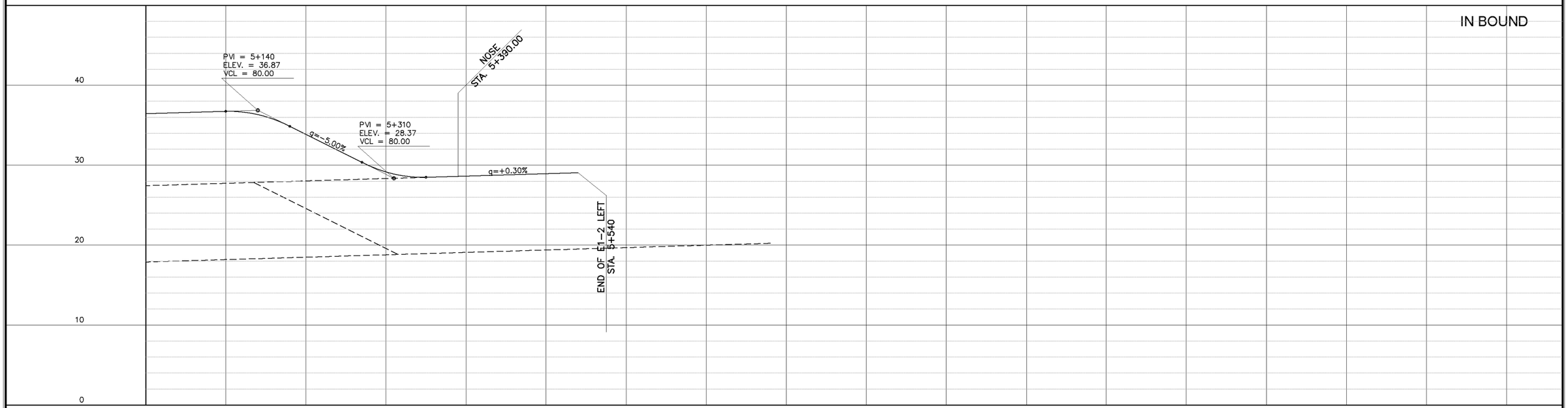

STATION	5+000	5+100	5+200	5+300	5+400	5+500	5+600	5+700	5+800	5+900
FINISHED GRADE		36.74	33.605	29.01	28.64	28.94				
ORIGINAL GRADE										
HORIZONTAL CURVATURE										

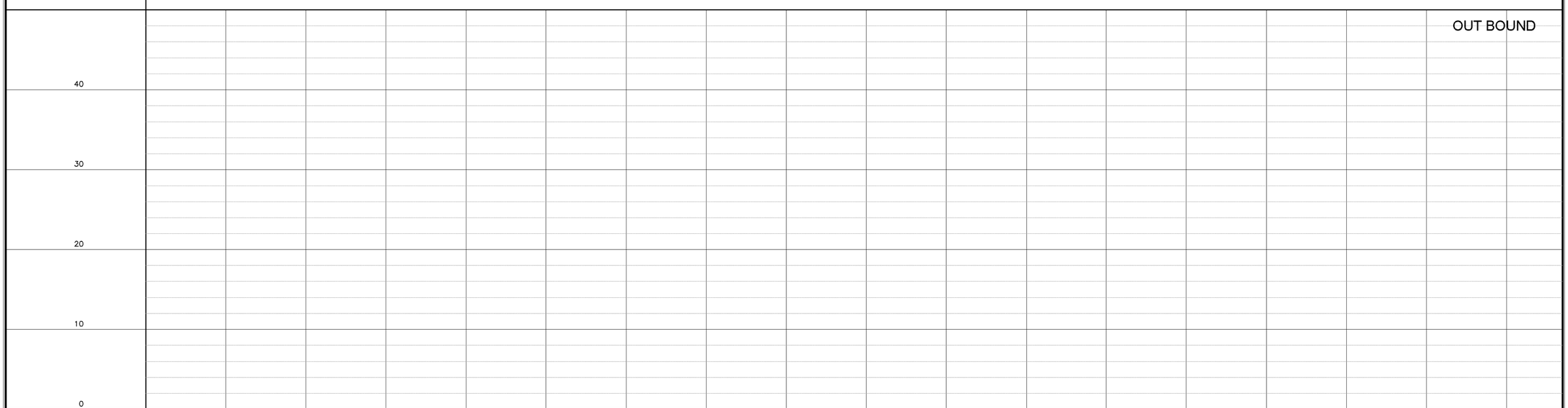

STATION										
FINISHED GRADE										
ORIGINAL GRADE										
HORIZONTAL CURVATURE										

KATAHIRA & ENGINEERS INTERNATIONAL
PRICE WATERHOUSE COOPERS ADVISORY CO., LTD.

JAPAN INTERNATIONAL COOPERATION AGENCY

GENERAL AUTHORITY FOR ROADS BRIDGES AND LAND TRANSPORT (GARBLT)
MINISTRY OF TRANSPORT
ARAB REPUBLIC OF EGYPT

PROJECT AND LOCATION :
FEASIBILITY STUDY ON
HIGH PRIORITY URBAN TOLL EXPRESSWAYS IN CAIRO
E1-2

SCALE :
H = 1/5,000
V = 1/500
FULL SIZE A3

DRAWING TITLE :
E1-2
PROFILE
Sta. 5+000 - 5+560 IN BOUND

DRAWING NO :
E1-2/R-07

SHEET NO :
7/14

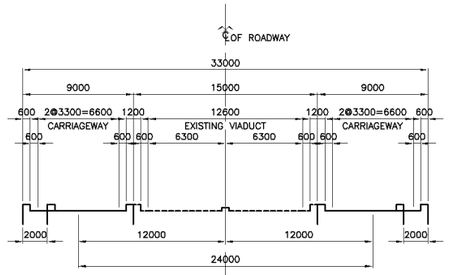

DEMOLITION OF EXISTING VIADUCT

SCALE: 1 : 500 M.

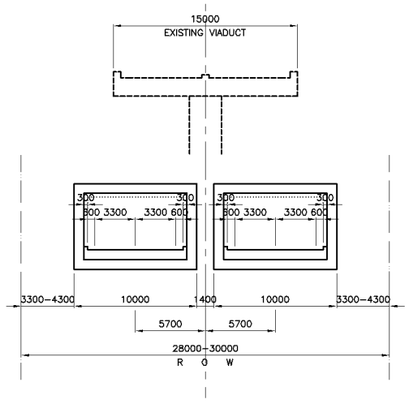

TUNNEL (TYPE 1)

SCALE: 1 : 500 M.

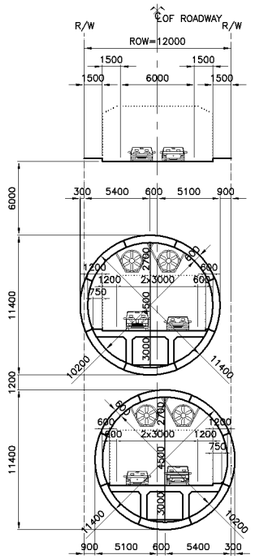

SHIELD TUNNEL (TANDEM TYPE)

SCALE: 1 : 500 M.

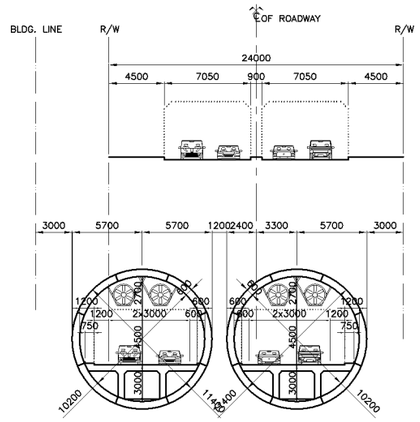

SHIELD TUNNEL (PARALLEL TYPE)

SCALE: 1 : 500 M.

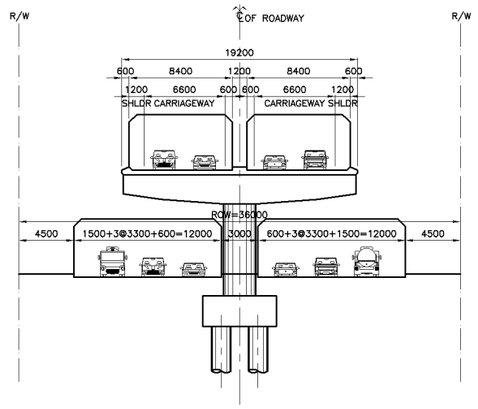

VIADUCT

SCALE: 1 : 500 M.

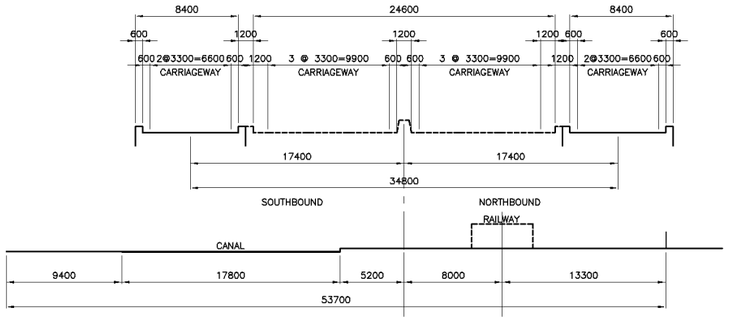

ELEVATED

SCALE: 1 : 500 M.

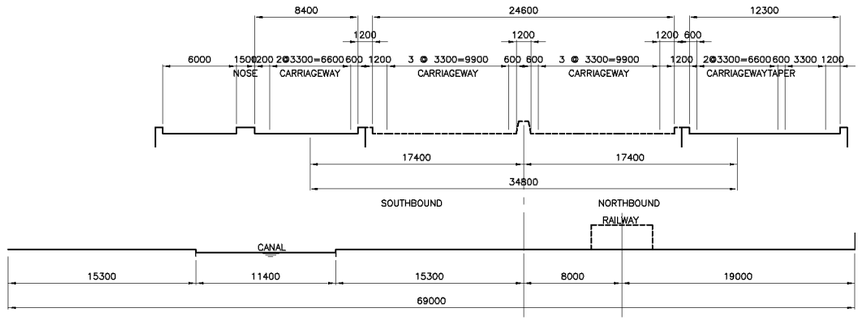

ELEVATED (ON / OFF RAMP)

SCALE: 1 : 500 M.

TYPES	STATION
DEMOLITION OF EXISTING RAMP	STA. 0+130 - 0+400
TRANSITION (AT-GRADE - DEPRESSED)	STA. 0+165.00 - 0+400.00 (IN BOUND) STA. 0+170.00 - 0+400.00 (OUT BOUND)
CUT AND COVER TUNNEL	STA. 0+400 - 0+700
ESA TUNNEL	STA. 0+700 - 0+760
SHIELD TUNNEL	STA. 0+760 - 2+900 (IN BOUND) STA. 0+760 - 3+300 (OUT BOUND)
TRANSITION	STA. 2+900 - 3+130 (IN BOUND) STA. 3+300 - 3+580 (OUT BOUND)
ELEVATED	STA. 3+130 - 5+560 (IN BOUND) STA. 3+580 - 4+720 (OUT BOUND)

KATAHIRA & ENGINEERS INTERNATIONAL
PRICE WATERHOUSE COOPERS ADVISORY CO., LTD.

JICA
JAPAN INTERNATIONAL COOPERATION AGENCY

GENERAL AUTHORITY FOR ROADS BRIDGES AND LAND TRANSPORT (GARBLT)
MINISTRY OF TRANSPORT
ARAB REPUBLIC OF EGYPT

PROJECT AND LOCATION :	SCALE :	DRAWING TITLE :	DRAWING NO :
FEASIBILITY STUDY ON HIGH PRIORITY URBAN TOLL EXPRESSWAYS IN CAIRO E1-2	1 : 500 FULL SIZE A3	TYPICAL ROAD SECTION	E1-2/R-08 SHEET NO : 8 / 14

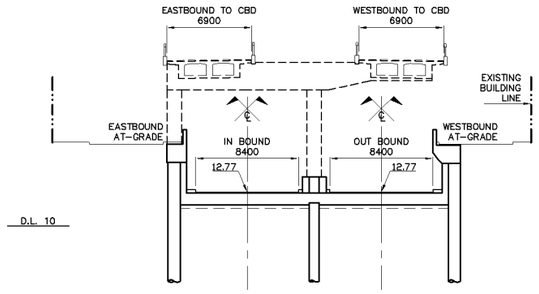

STA. 0+400

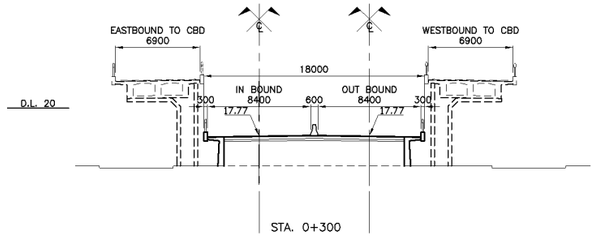

STA. 0+300

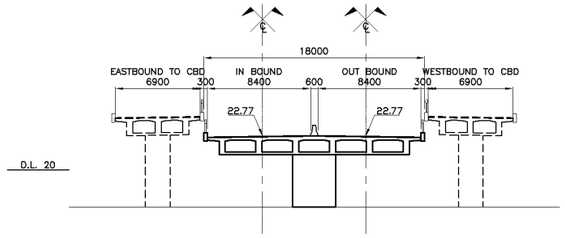

STA. 0+200

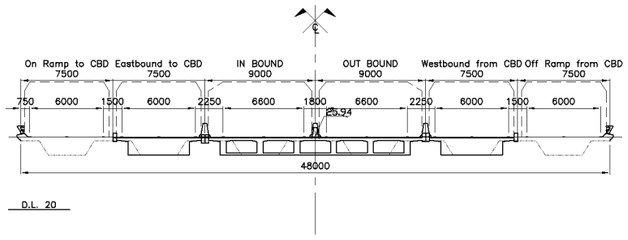

STA. 0+100

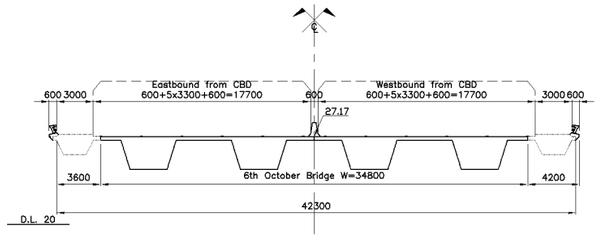

STA. 0+000

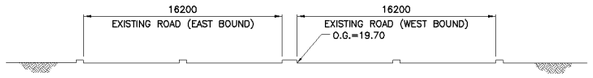

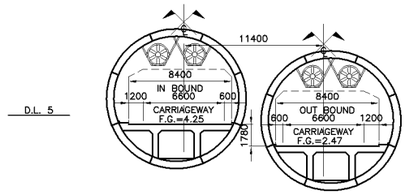

STA. 1+000

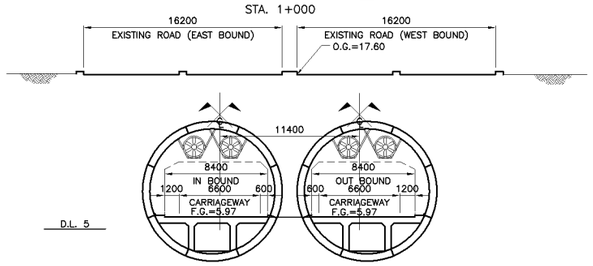

STA. 0+800

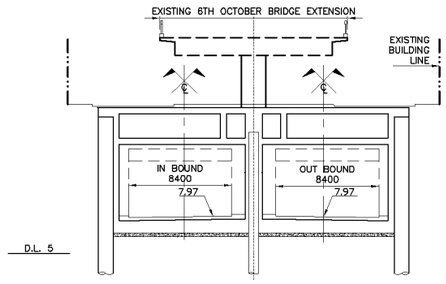

STA. 0+600

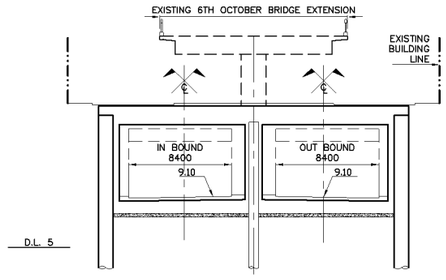

STA. 0+500

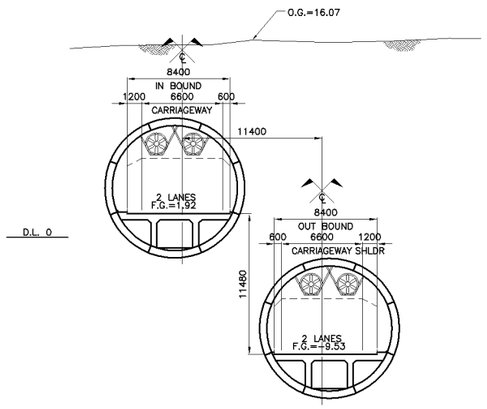

STA. 1+600

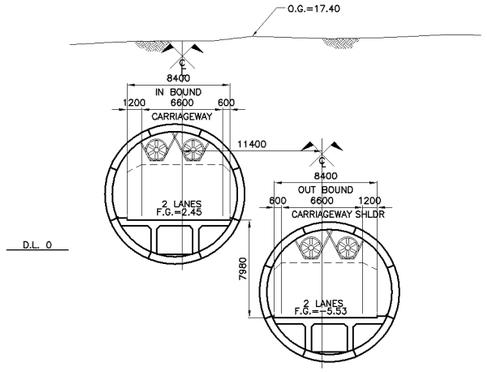

STA. 1+400

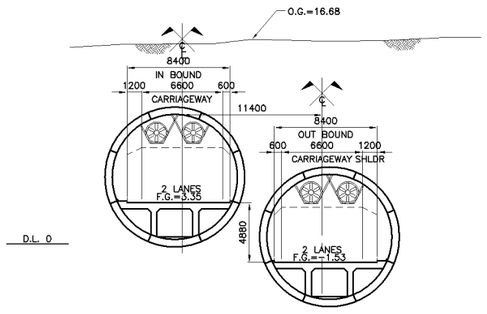

STA. 1+200

KATAHIRA & ENGINEERS INTERNATIONAL PRICE WATERHOUSE COOPERS ADVISORY CO., LTD.	JICA JAPAN INTERNATIONAL COOPERATION AGENCY	GENERAL AUTHORITY FOR ROADS BRIDGES AND LAND TRANSPORT (GARBLT) MINISTRY OF TRANSPORT ARAB REPUBLIC OF EGYPT	PROJECT AND LOCATION : FEASIBILITY STUDY ON HIGH PRIORITY URBAN TOLL EXPRESSWAYS IN CAIRO E1-2	SCALE : 1 : 500 FULL SIZE A3	DRAWING TITLE : CROSS SECTION (1/4) Sta. 0+000 - Sta. 1+600	DRAWING NO : E1-2/R-09 SHEET NO : 9 / 14

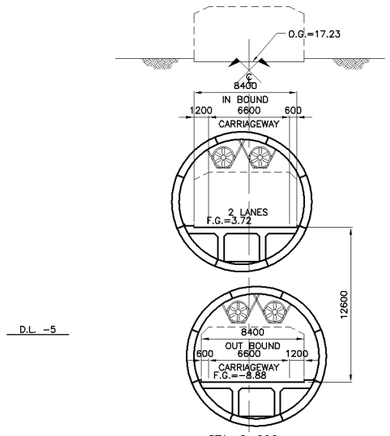

STA. 2+200

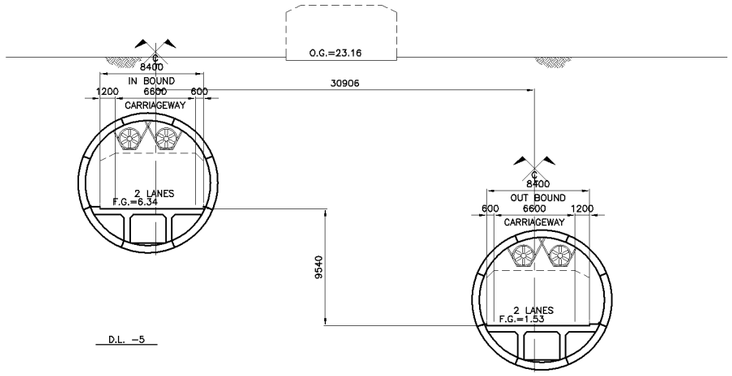

STA. 2+800

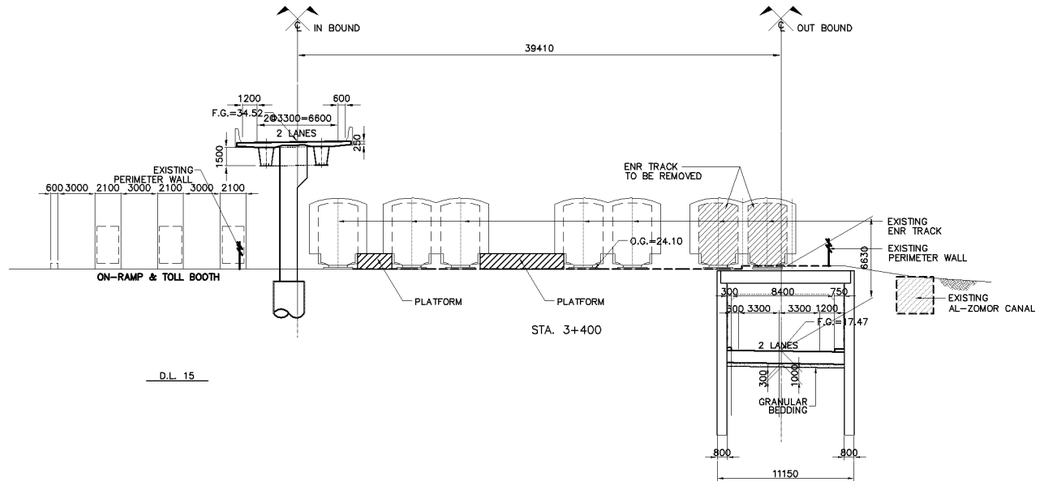

STA. 3+400

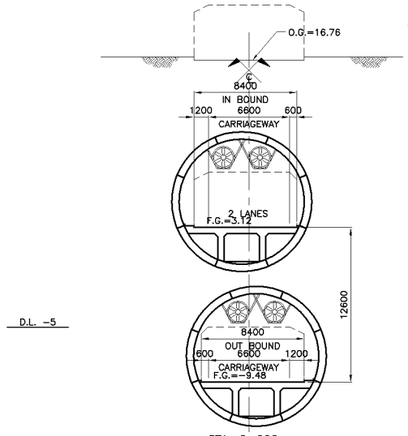

STA. 2+000

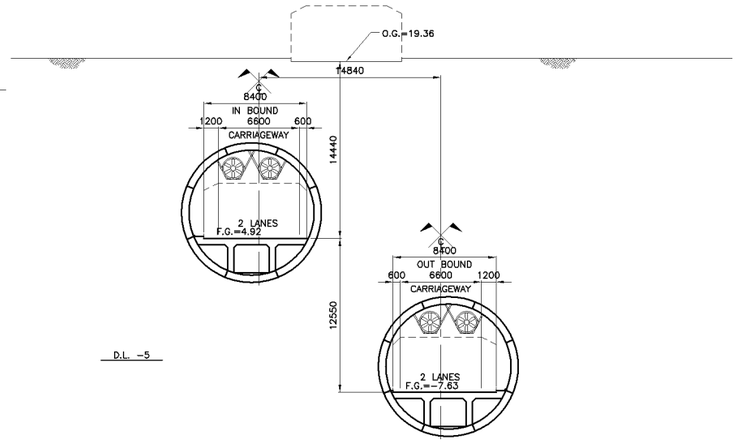

STA. 2+600

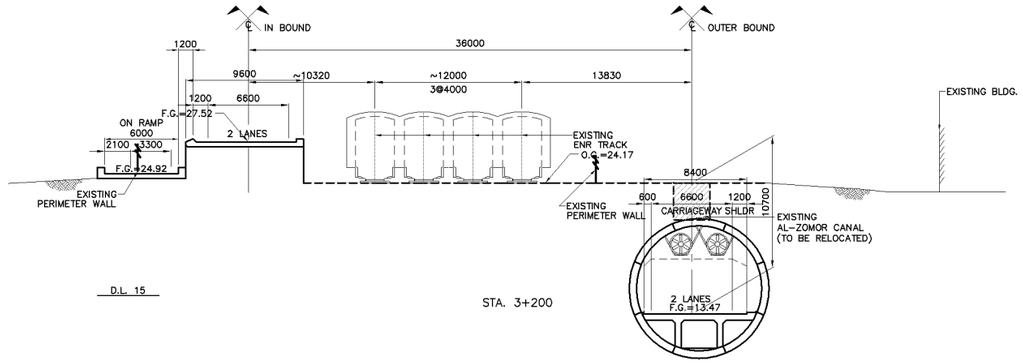

STA. 3+200

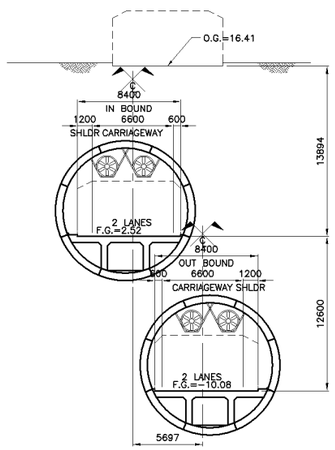

STA. 1+800

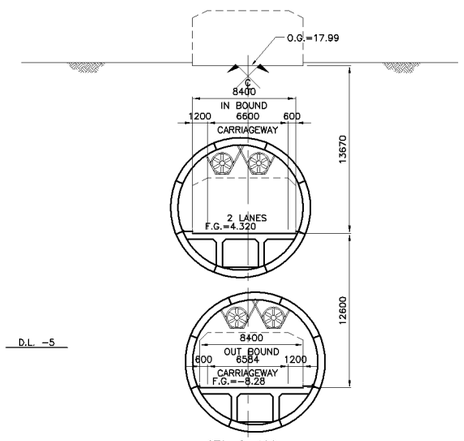

STA. 2+400

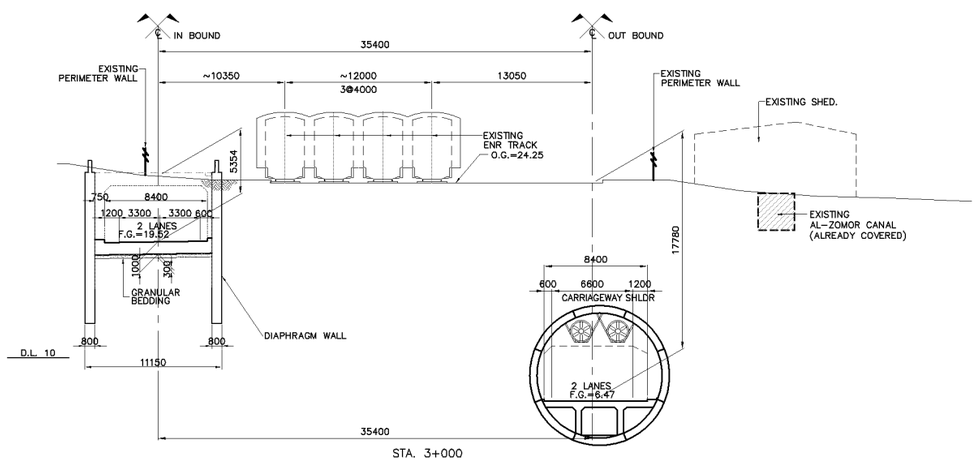

STA. 3+000

KATAHIRA & ENGINEERS INTERNATIONAL PRICE WATERHOUSE COOPERS ADVISORY CO., LTD.	JICA JAPAN INTERNATIONAL COOPERATION AGENCY	GENERAL AUTHORITY FOR ROADS BRIDGES AND LAND TRANSPORT (GARBLT) MINISTRY OF TRANSPORT ARAB REPUBLIC OF EGYPT	PROJECT AND LOCATION : FEASIBILITY STUDY ON HIGH PRIORITY URBAN TOLL EXPRESSWAYS IN CAIRO E1-2	SCALE : 1 : 500 FULL SIZE A3	DRAWING TITLE : CROSS SECTION (2/4) Sta. 3+000 - Sta. 3+400	DRAWING NO : E1-2/R-10 SHEET NO : 10 / 14

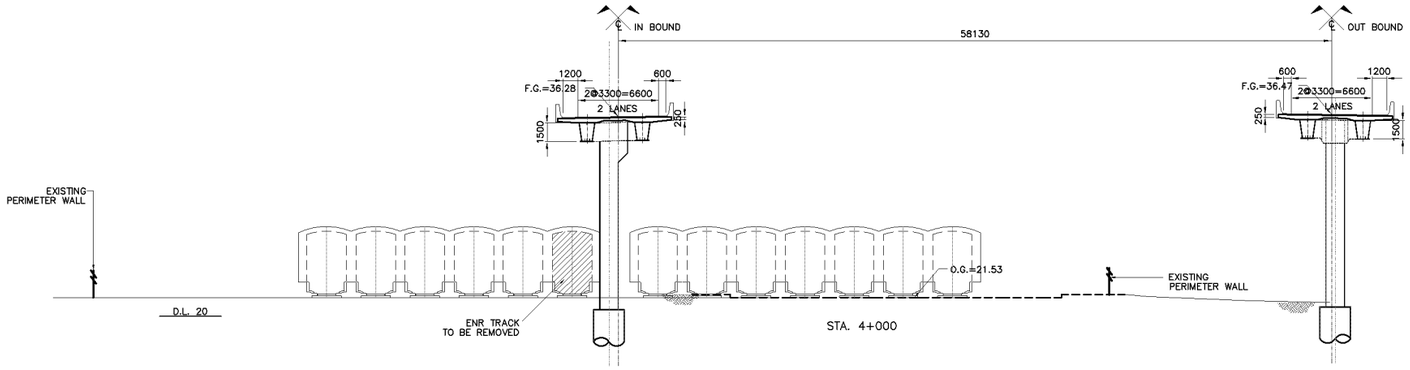

STA. 4+000

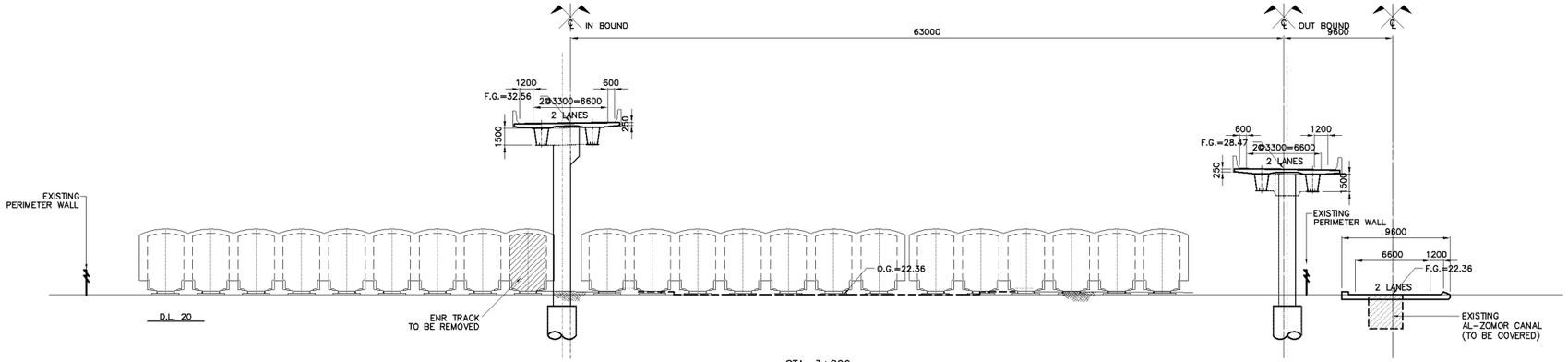

STA. 3+800

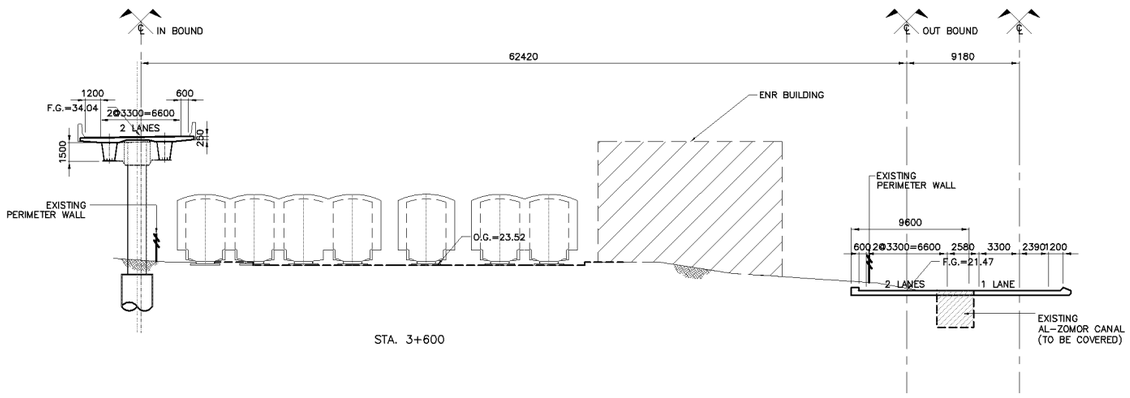

STA. 3+600

KATAHIRA & ENGINEERS INTERNATIONAL PRICE WATERHOUSE COOPERS ADVISORY CO., LTD.	JICA JAPAN INTERNATIONAL COOPERATION AGENCY	GENERAL AUTHORITY FOR ROADS BRIDGES AND LAND TRANSPORT (GARBLT) MINISTRY OF TRANSPORT ARAB REPUBLIC OF EGYPT	PROJECT AND LOCATION : FEASIBILITY STUDY ON HIGH PRIORITY URBAN TOLL EXPRESSWAYS IN CAIRO E1-2	SCALE : 1 : 500 FULL SIZE A3	DRAWING TITLE : CROSS SECTION (3/4) Sta. 3+600 - Sta. 4+000	DRAWING NO : E1-2/R-11 SHEET NO : 11/14

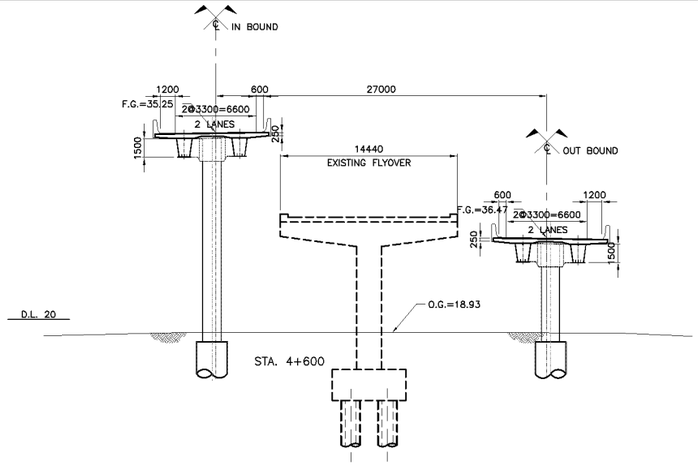

STA. 4+600

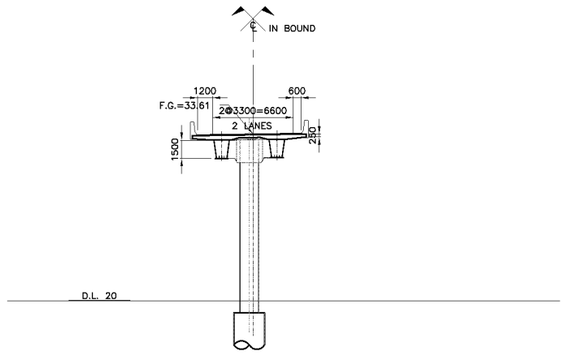

STA. 5+200

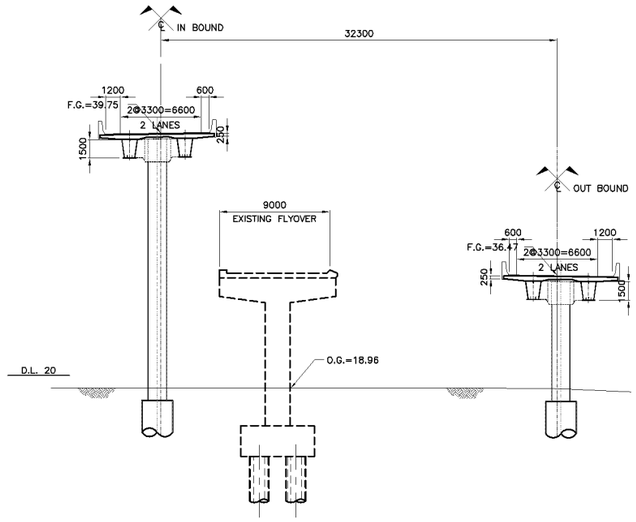

STA. 4+400

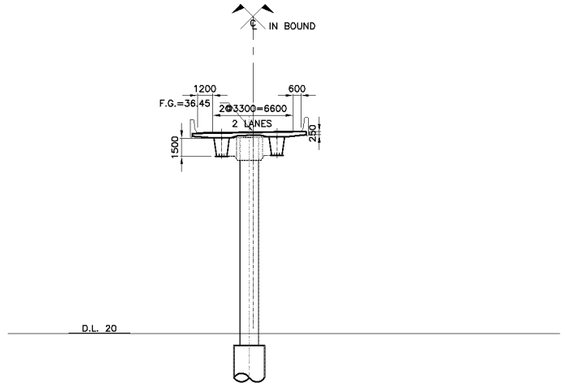

STA. 5+000

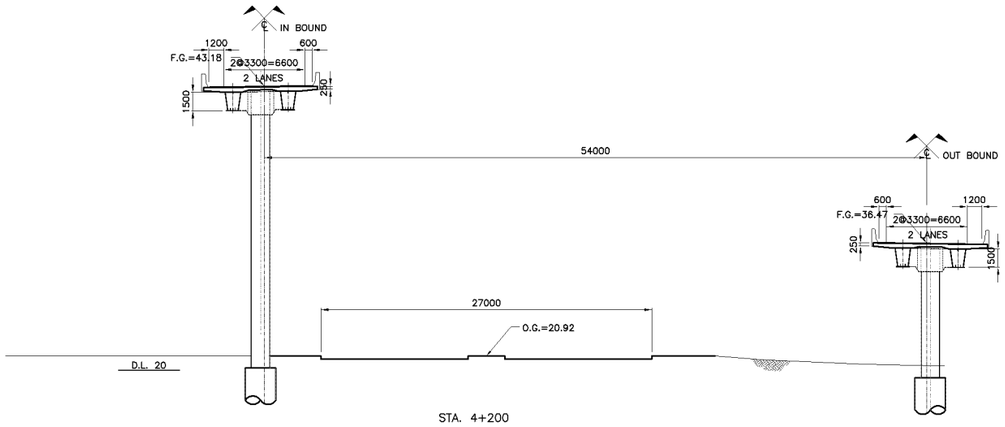

STA. 4+200

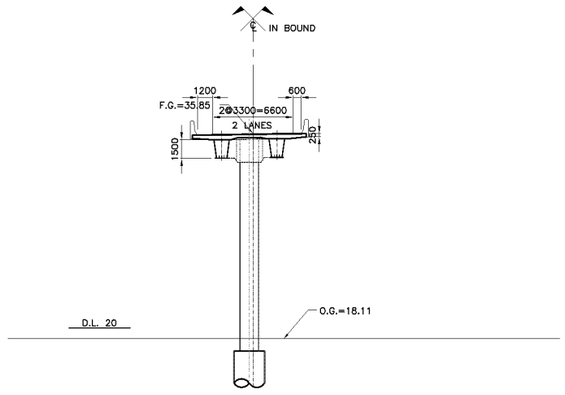

STA. 4+800

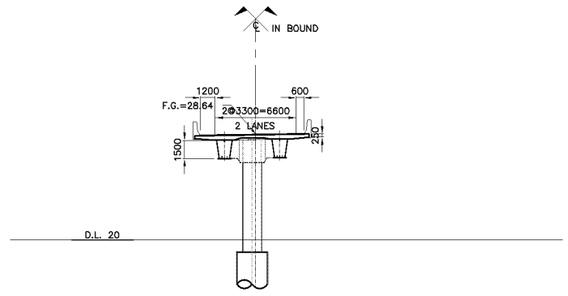

STA. 5+400

KATAHIRA & ENGINEERS INTERNATIONAL PRICE WATERHOUSE COOPERS ADVISORY CO., LTD.	JICA JAPAN INTERNATIONAL COOPERATION AGENCY	GENERAL AUTHORITY FOR ROADS BRIDGES AND LAND TRANSPORT (GARBLT) MINISTRY OF TRANSPORT ARAB REPUBLIC OF EGYPT	PROJECT AND LOCATION : FEASIBILITY STUDY ON HIGH PRIORITY URBAN TOLL EXPRESSWAYS IN CAIRO E1-2	SCALE : 1 : 500 FULL SIZE A3	DRAWING TITLE : CROSS SECTION (4/4) Sta. 4+200 - Sta. 5+400	DRAWING NO : E1-2/R-12 SHEET NO : 12 / 14

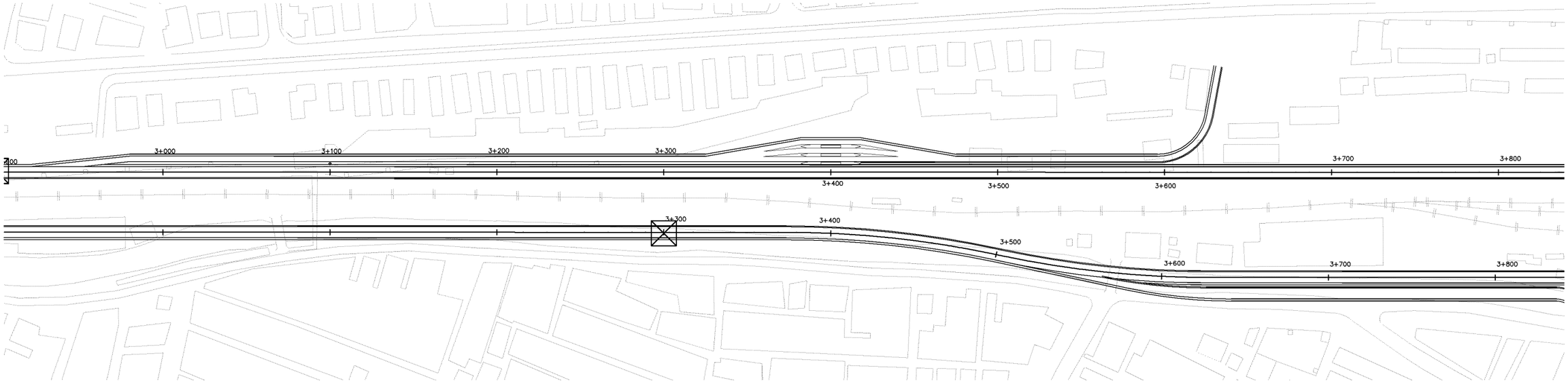

ON-RAMP INBOUND

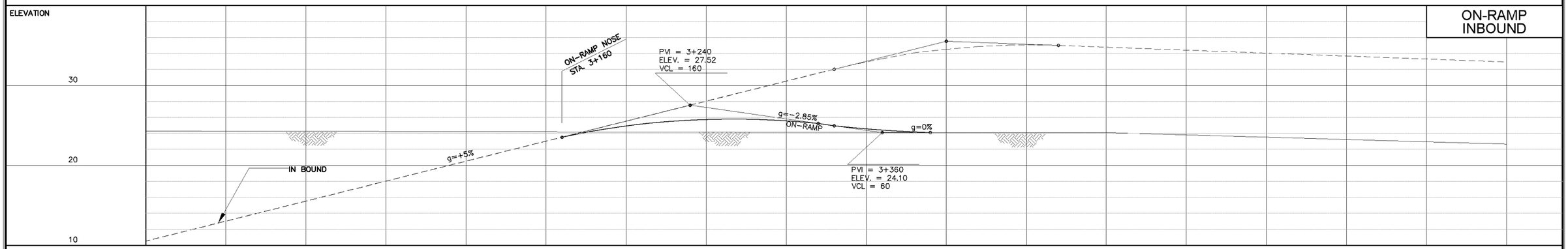

STATION	2+900	3+000	3+100	3+200	3+300	3+400	3+500	3+600	3+700
FINISHED GRADE				23.52, 25.13	25.90	24.10, 34.52			
ORIGINAL GRADE		24.25	24.25	24.17	24.14	24.10	24.10	23.52	22.94

OFF-RAMP OUTBOUND

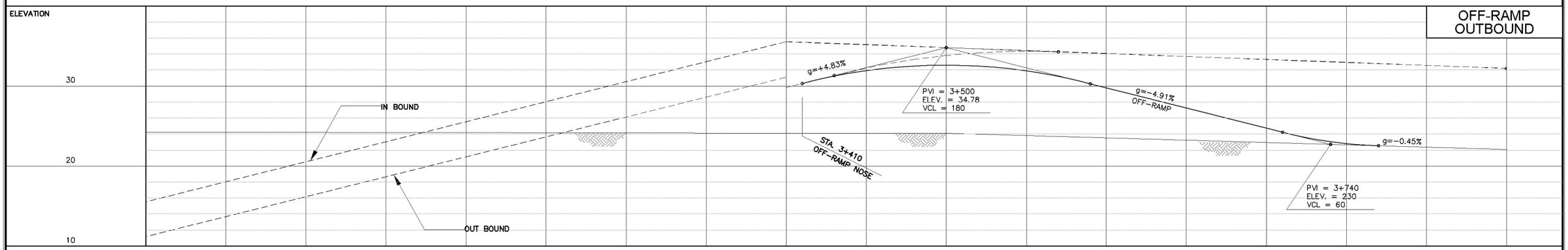

STATION	3+000	3+100	3+200	3+300	3+400	3+500	3+600	3+700	3+800
FINISHED GRADE					29.95, 30.43	32.59	29.87	24.96, 22.86	
ORIGINAL GRADE		24.25	24.17	24.14	24.10	24.10	23.52	22.94	22.36

KATAHIRA & ENGINEERS INTERNATIONAL
PRICE WATERHOUSE COOPERS ADVISORY CO., LTD.

JAPAN INTERNATIONAL COOPERATION AGENCY

GENERAL AUTHORITY FOR ROADS BRIDGES AND LAND TRANSPORT (GARBLT)
MINISTRY OF TRANSPORT
ARAB REPUBLIC OF EGYPT

PROJECT AND LOCATION :
FEASIBILITY STUDY ON
HIGH PRIORITY URBAN TOLL EXPRESSWAYS IN CAIRO
E1-2

SCALE :
H = 1/2,500
V = 1/500
FULL SIZE A3

DRAWING TITLE :
ON / OFF RAMPS
PLAN AND PROFILE
Sta. 2+990 - Sta. 3+800

DRAWING NO : E1-2/R-13

SHEET NO : 13 / 14

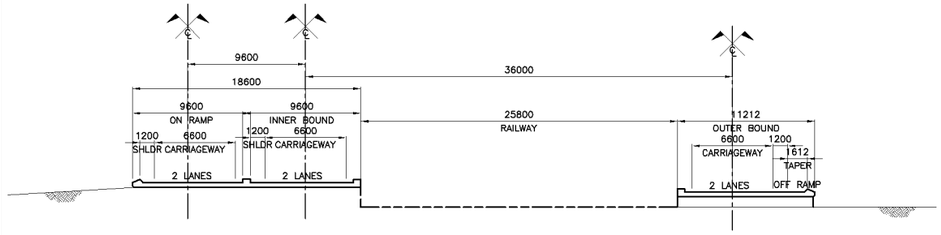

④ - ④ SECTION

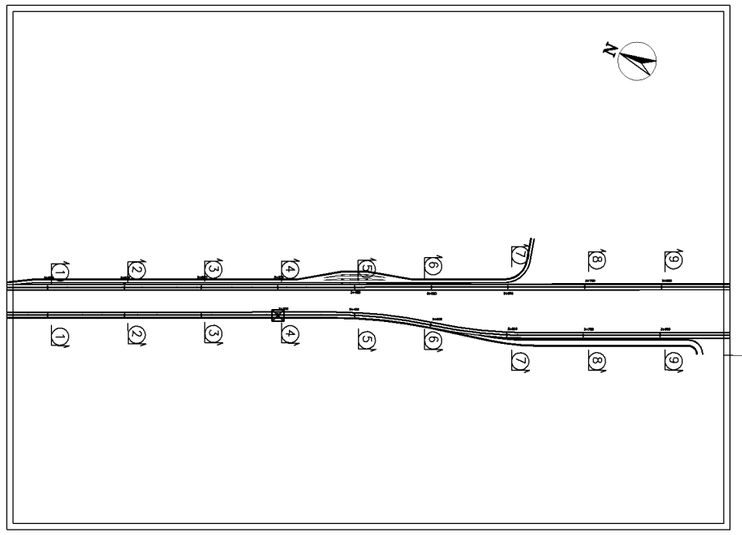

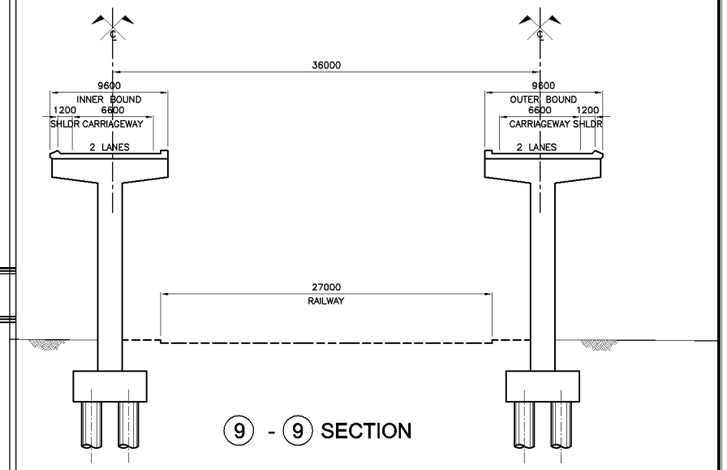

⑨ - ⑨ SECTION

D.L. 150

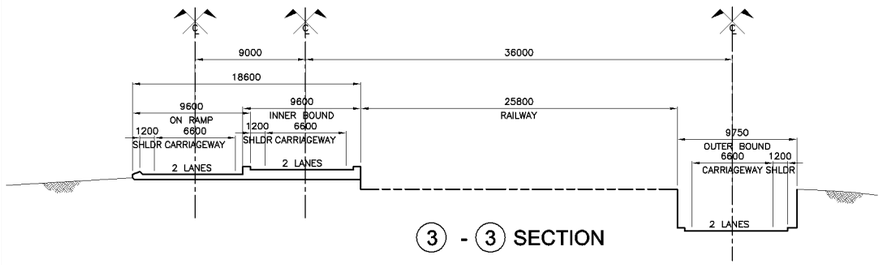

③ - ③ SECTION

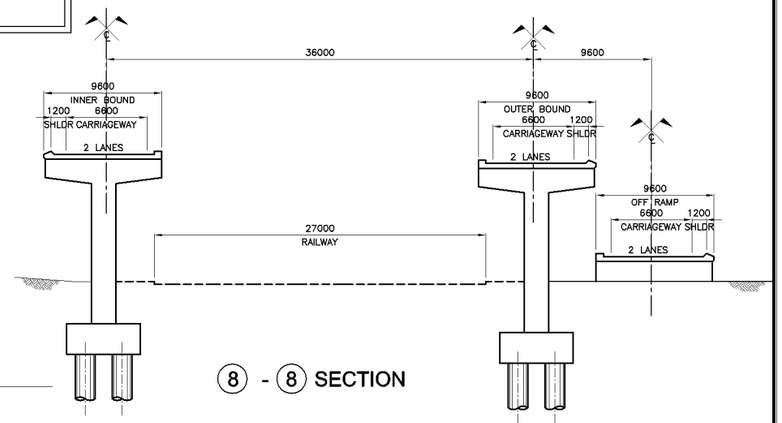

⑧ - ⑧ SECTION

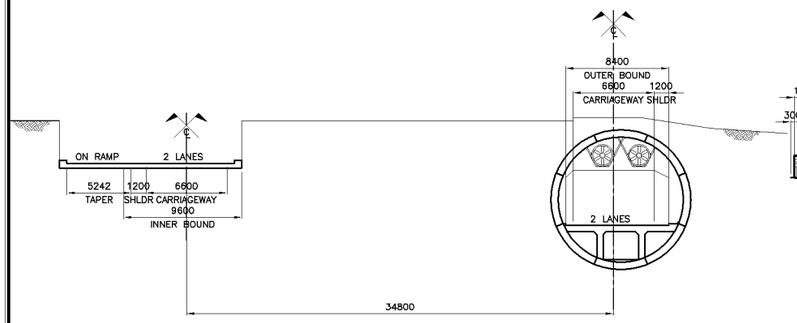

② - ② SECTION

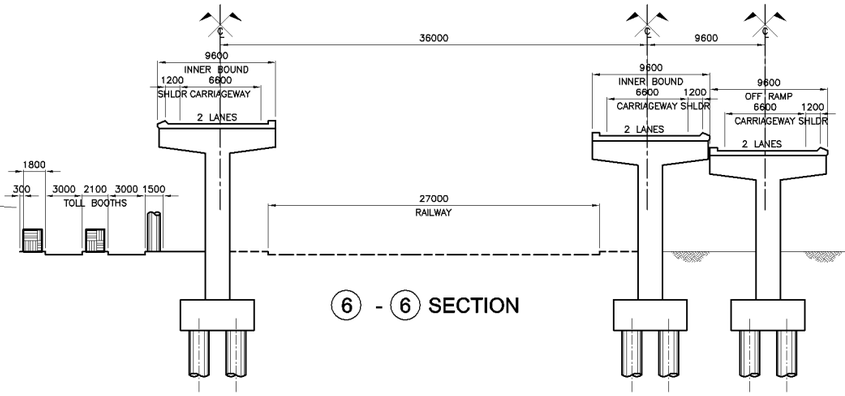

⑥ - ⑥ SECTION

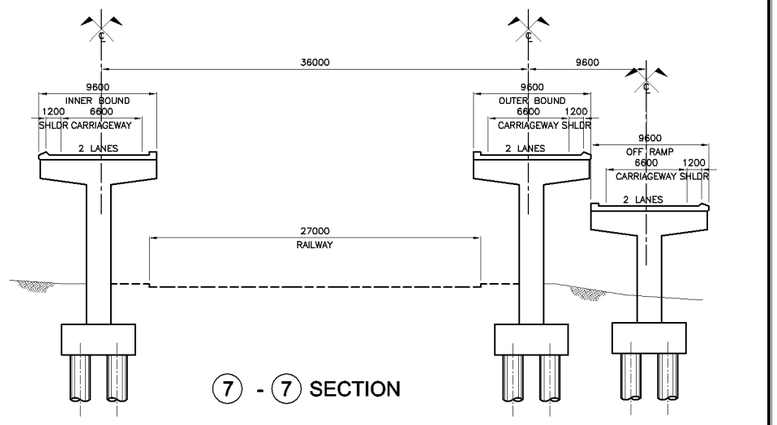

⑦ - ⑦ SECTION

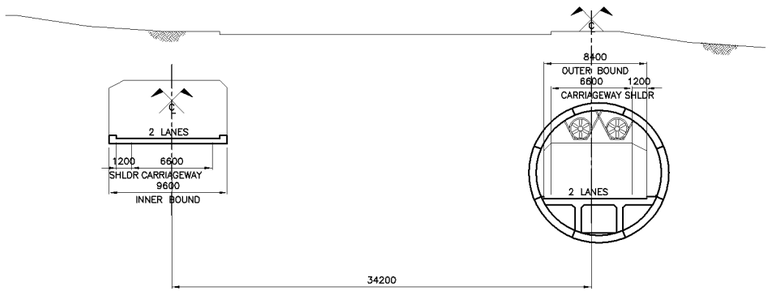

① - ① SECTION

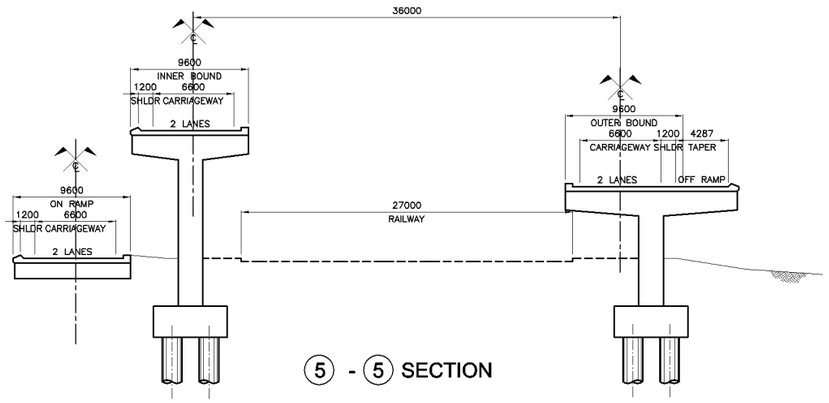

⑤ - ⑤ SECTION

KATAHIRA & ENGINEERS INTERNATIONAL PRICE WATERHOUSE COOPERS ADVISORY CO., LTD.	JICA JAPAN INTERNATIONAL COOPERATION AGENCY	GENERAL AUTHORITY FOR ROADS BRIDGES AND LAND TRANSPORT (GARBLT) MINISTRY OF TRANSPORT ARAB REPUBLIC OF EGYPT	PROJECT AND LOCATION : FEASIBILITY STUDY ON HIGH PRIORITY URBAN TOLL EXPRESSWAYS IN CAIRO E1-2	SCALE : AS SHOWN FULL SIZE A3	DRAWING TITLE : SECTION ON / OFF RAMP Sta. 2+990 - 3+800	DRAWING NO : E1-2/R-14 SHEET NO : 14 / 14

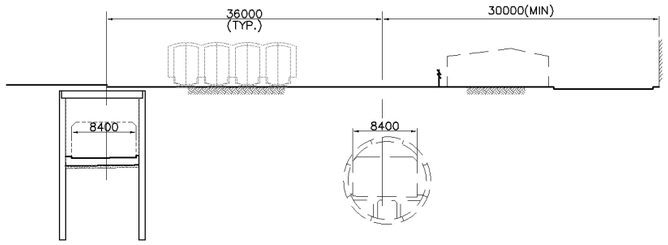

7 SCALE **CUT AND COVER** 1:400

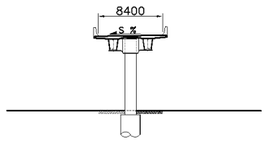

8 SCALE **SINGLE COLUMN PIER (STEEL)** 1:400

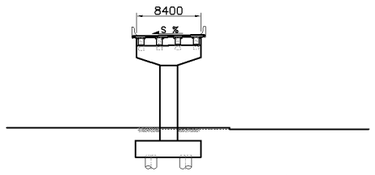

9 SCALE **SINGLE COLUMN PIER (CONCRETE)** 1:400

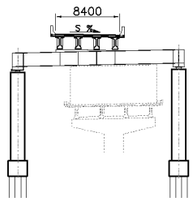

10 SCALE **PORTAL PIER** 1:400

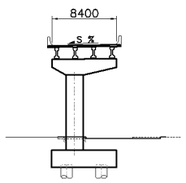

11 SCALE **SINGLE COLUMN (CANTILEVER)** 1:400

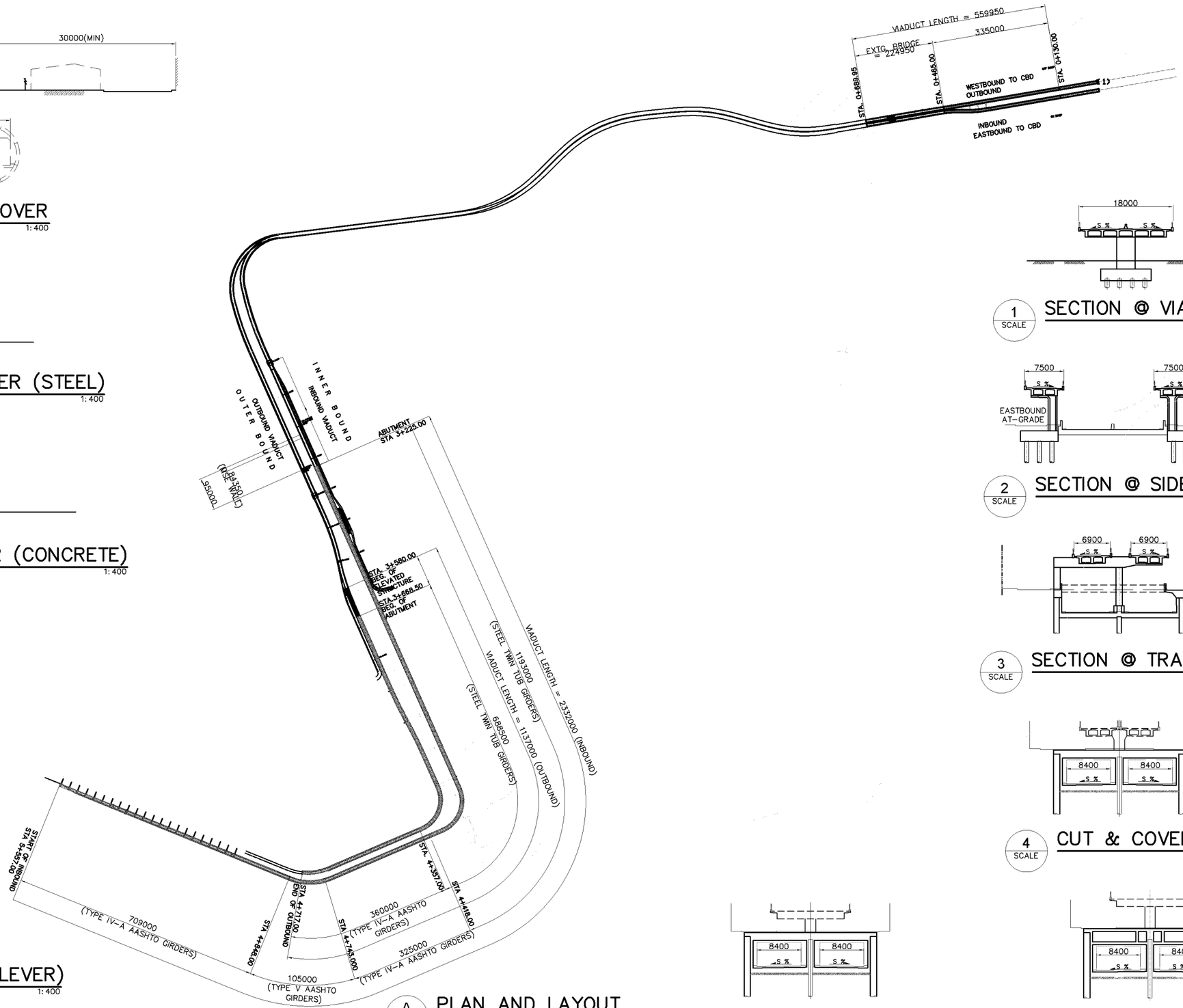

A SCALE **PLAN AND LAYOUT** 1:12000

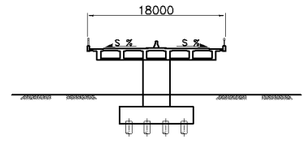

1 SCALE **SECTION @ VIADUCT** 1:400

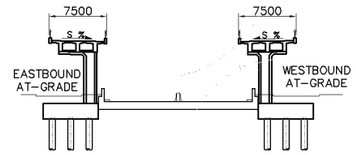

2 SCALE **SECTION @ SIDE RAMP** 1:400

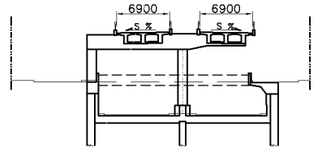

3 SCALE **SECTION @ TRANSITION** 1:400

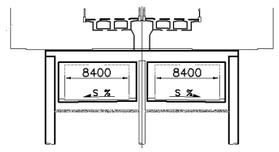

4 SCALE **CUT & COVER 1** 1:400

5 SCALE **CUT & COVER 2** 1:400

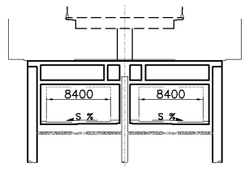

6 SCALE **CUT & COVER 3** 1:400

KATAHIRA & ENGINEERS INTERNATIONAL PRICE WATERHOUSE COOPERS ADVISORY CO., LTD.	JICA JAPAN INTERNATIONAL COOPERATION AGENCY	GENERAL AUTHORITY FOR ROADS BRIDGES AND LAND TRANSPORT (GARBLT) MINISTRY OF TRANSPORT ARAB REPUBLIC OF EGYPT	PROJECT AND LOCATION : FEASIBILITY STUDY ON HIGH PRIORITY URBAN TOLL EXPRESSWAYS IN CAIRO E1-2	SCALE : 1:1000 FULL SIZE A3	DRAWING TITLE : (E1-2) OVERALL PLAN AND LAYOUT	DRAWING NO : E1-2/S-01 SHEET NO : 1 / 48

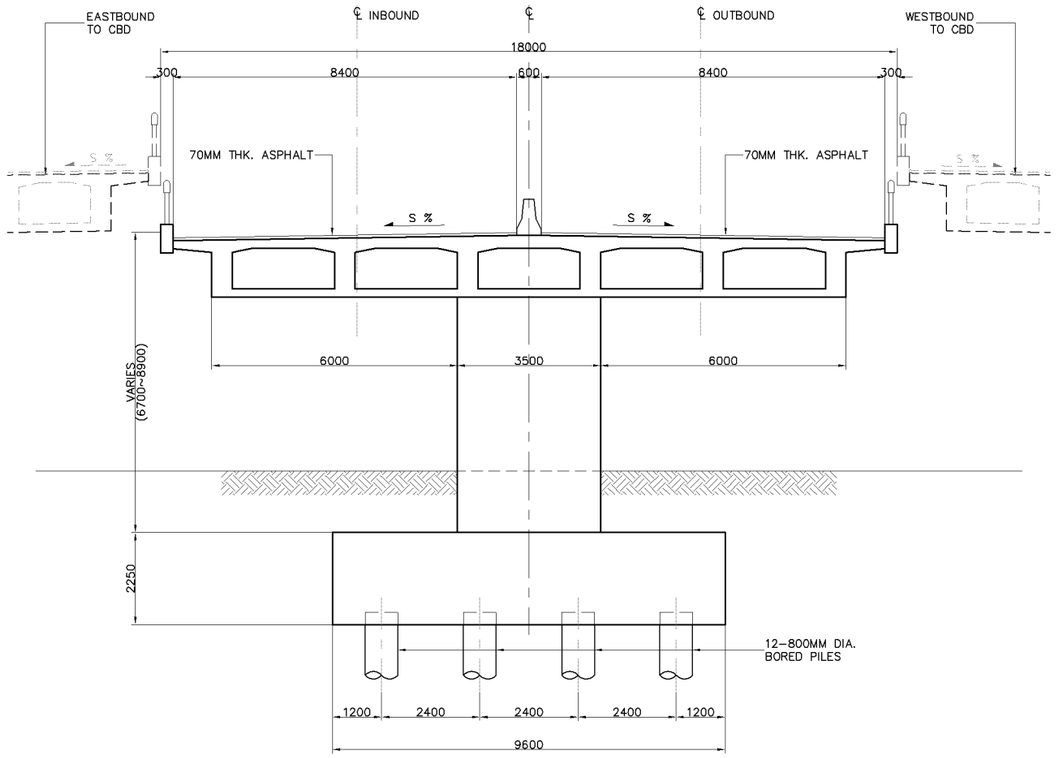

1 SCALE **TYPICAL PIER ELEVATION** 1:150

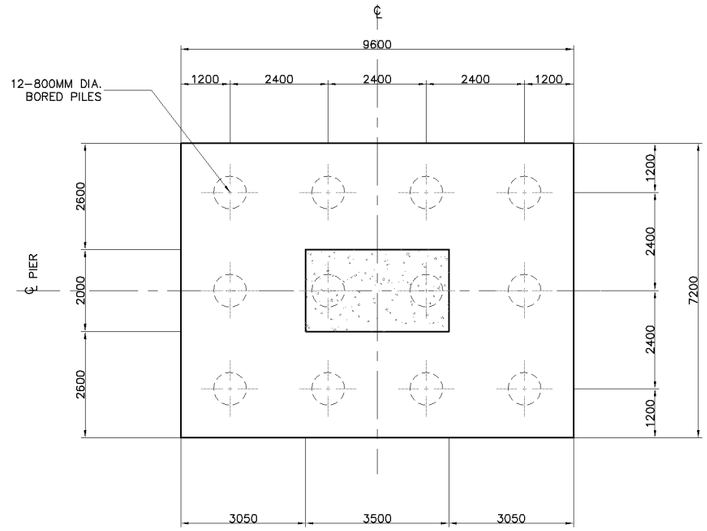

2 SCALE **PLAN ON FOOTING** 1:150

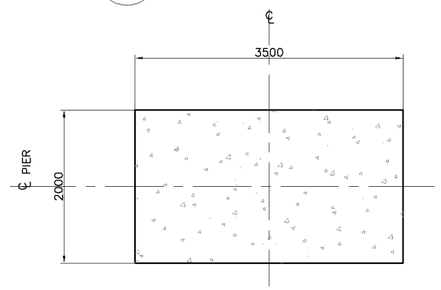

3 SCALE **COLUMN SECTION** 1:80

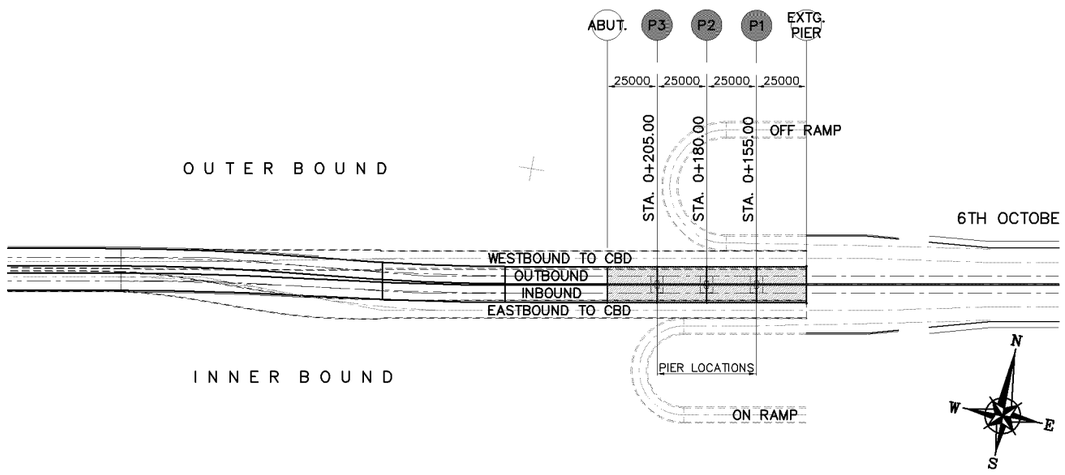

A SCALE **PLAN LAYOUT ON MAIN RAMP INBOUND & OUTBOUND** 1:3000

SUMMARY OF QUANTITIES - 3 PIERS (P1 - P3)

DESCRIPTION	UNIT	QUANTITIES		
		PILE CAP	COLUMN	TOTAL
EARTH WORKS				
STRUCTURE EXCAVATION	CU.M.	778.00		778.00
FOUNDATION FILL	CU.M.			
STRUCTURE BACKFILL	CU.M.	280.00		280.00
STRUCTURE WORKS				
CAST IN PLACE BORED PILES (800MM DIA.)	M.	720.00		720.00
PILE LOAD TEST STATIC (800MM DIA.)	No.	1.00		1.00
STRUCTURAL CONCRETE Fcu = 300 kg/cm2	CU.M.	467.00		467.00
STRUCTURAL CONCRETE Fcu = 450 kg/cm2	CU.M.		187.00	187.00
REINFORCING BAR	M.T.	93.00	47.00	140.00

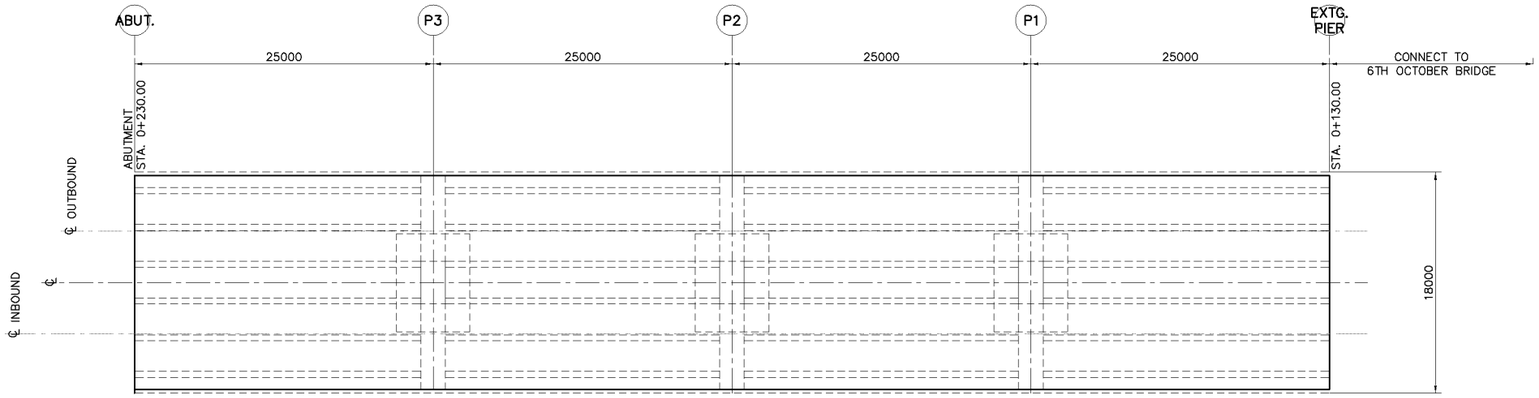

1 SCALE **PLAN** 1:500

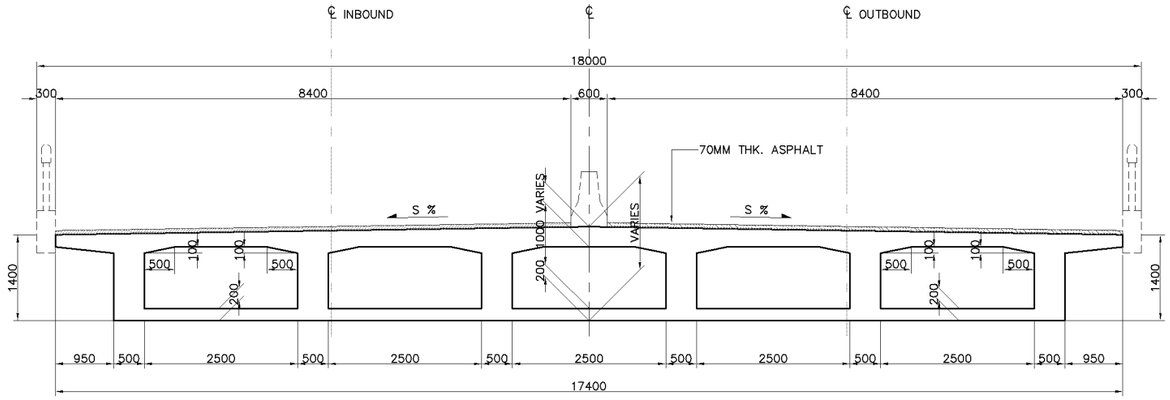

2 SCALE **TYPICAL SECTION** 1:100

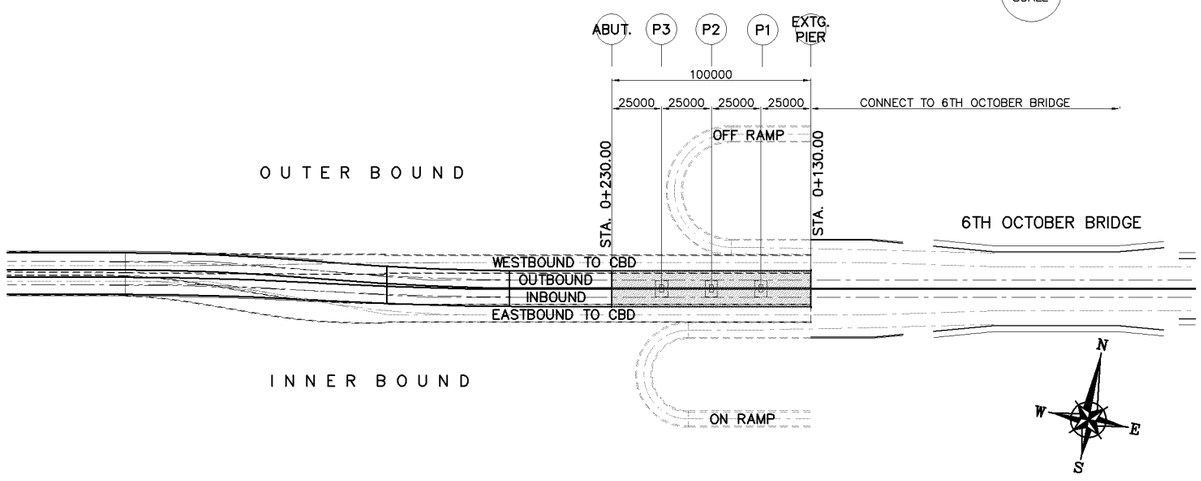

A SCALE **PLAN LAYOUT ON MAIN RAMP INBOUND & OUTBOUND** 1:3000

SUMMARY OF QUANTITIES - SUPERSTRUCTURE
(LENGTH = 100.00 M.)

DESCRIPTION	UNIT	QUANTITIES		
		*	DECK	TOTAL
STRUCTURE WORKS				
STRUCTURAL CONCRETE Fcu=450 kg/cm2	CU.M.		1184.00	1184.00
REINFORCING BAR	M.T.		415.00	415.00
BRIDGE RAILING	M.		195.00	195.00
ASPHALT	CU.M.		115.00	115.00

KATAHIRA & ENGINEERS INTERNATIONAL
PRICE WATERHOUSE COOPERS ADVISORY CO., LTD.

JICA
JAPAN INTERNATIONAL COOPERATION AGENCY

GENERAL AUTHORITY FOR ROADS BRIDGES AND LAND TRANSPORT (GARBLT)
MINISTRY OF TRANSPORT
ARAB REPUBLIC OF EGYPT

PROJECT AND LOCATION :	SCALE :	DRAWING TITLE :	DRAWING NO :
FEASIBILITY STUDY ON HIGH PRIORITY URBAN TOLL EXPRESSWAYS IN CAIRO E1-2	1:3000 1:500 1:100 FULL SIZE A3	MAIN RAMP FROM 6TH OCTOBER BRIDGE SUPERSTRUCTURE LAYOUT & SECTIONS (STA. 0+130.00 - STA.0+230.00)	E1-2/S-03
			SHEET NO : 3 / 48

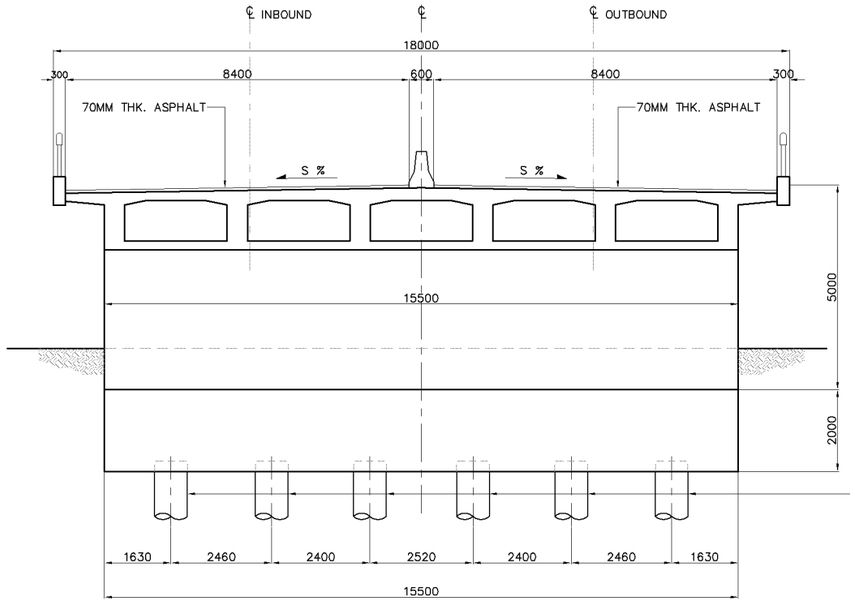

1 SCALE **FRONT ELEVATION** 1:150

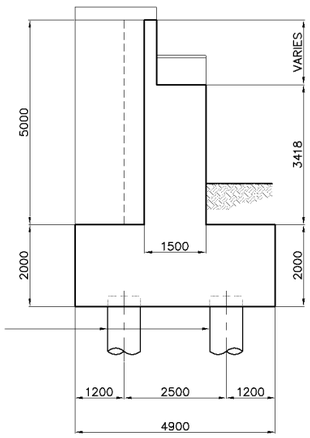

2 SCALE **SIDE ELEVATION** 1:150

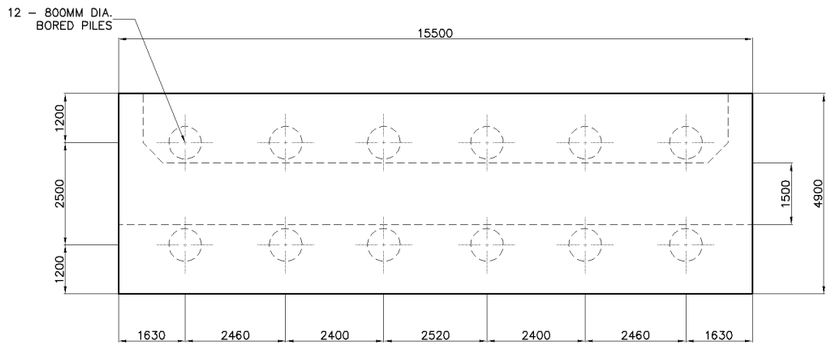

3 SCALE **PLAN ON PILE CAP** 1:150

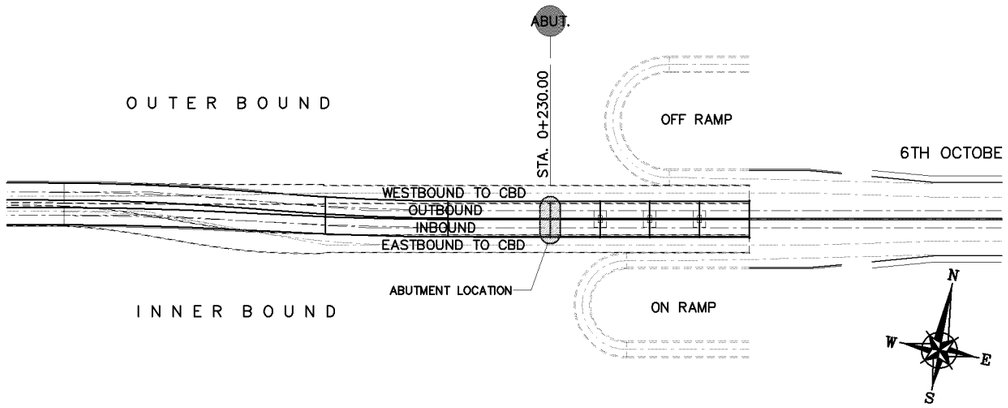

A SCALE **PLAN** 1:3000

SUMMARY OF QUANTITIES - ABUTMENT

DESCRIPTION	UNIT	QUANTITIES		
		ABUTMENT	PILECAP	TOTAL
EARTH WORKS				
STRUCTURE EXCAVATION	CU.M.	228.00		228.00
FOUNDATION FILL	CU.M.			
STRUCTURE BACK FILL	CU.M.	149.00		149.00
STRUCTURE WORKS				
CAST IN PLACE BORED PILES (800MM DIA.)	M.	240.00		240.00
PILE LOAD TEST–STATIC (800MM DIA.)	No.	1.00		1.00
STRUCTURAL CONCRETE Fcu=300 kg/cm2	CU.M	87.00	152.00	239.00
REINFORCING BARS	M.T.	17.00	30.00	48.00

KATAHIRA & ENGINEERS INTERNATIONAL
PRICE WATERHOUSE COOPERS ADVISORY CO., LTD.

JICA
JAPAN INTERNATIONAL COOPERATION AGENCY

GENERAL AUTHORITY FOR ROADS BRIDGES AND LAND TRANSPORT (GARBLT)
MINISTRY OF TRANSPORT
ARAB REPUBLIC OF EGYPT

PROJECT AND LOCATION : FEASIBILITY STUDY ON HIGH PRIORITY URBAN TOLL EXPRESSWAYS IN CAIRO E1-2

SCALE : 1:3000 1:150 1:200 FULL SIZE A3

DRAWING TITLE : MAIN RAMP FROM 6TH OCTOBER BRIDGE ABUTMENT LAYOUT & SECTIONS (STA. 0+230.00)

DRAWING NO : E1-2/S-04

SHEET NO : 4 / 48

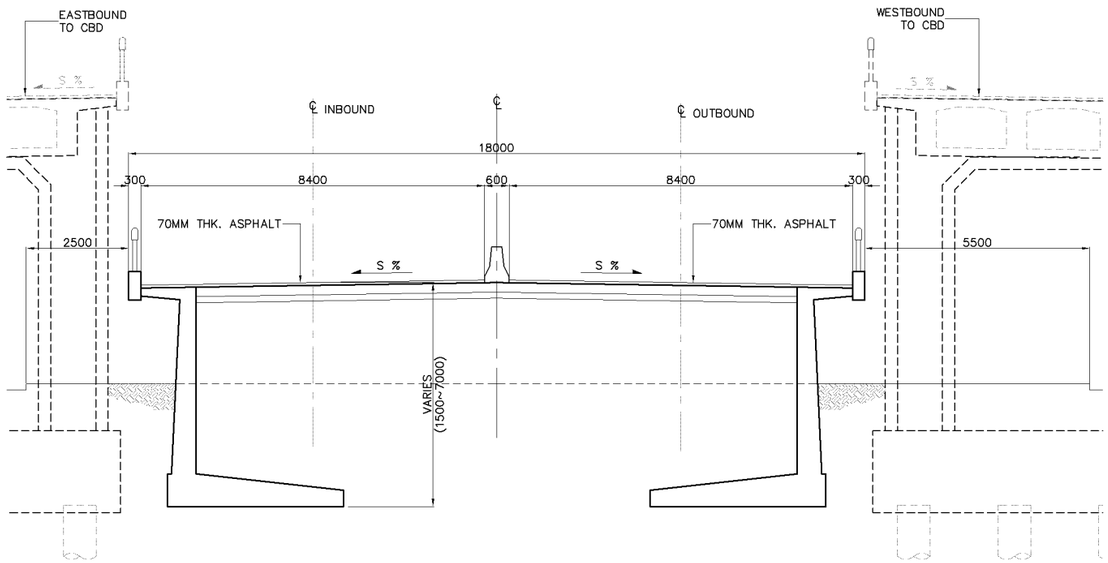

RETAINING WALL

1 SCALE TYPICAL SECTION – STA. 0+227.40 TO STA. 0+297.40 1:150

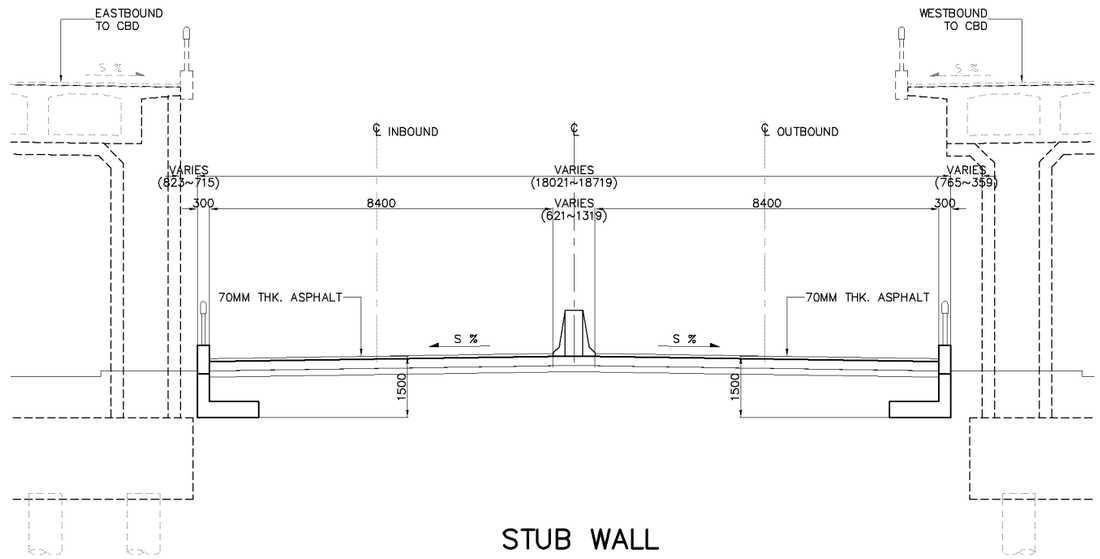

STUB WALL

2 SCALE TYPICAL SECTION – STA. 0+297.40 TO STA. 0+307.40 1:150

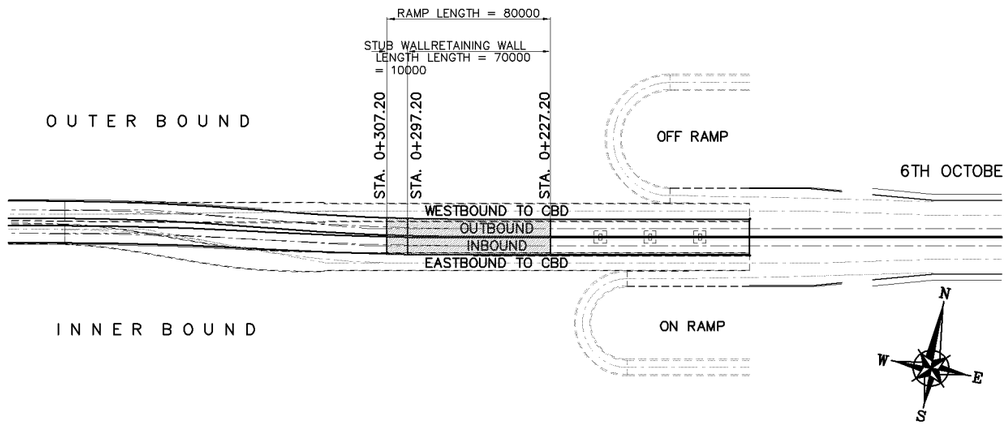

A SCALE PLAN 1:3000

SUMMARY OF QUANTITIES - APPROACH EMBANKMENT
(LENGTH = 80.00 M.)

DESCRIPTION	UNIT	QUANTITIES		
		RET. WALL	STUB WALL	TOTAL
EARTH WORKS				
STRUCTURE EXCAVATION	CU.M.	3654.00	187.00	3841.00
FOUNDATION FILL	CU.M.	8526.00	281.00	8807.00
STRUCTURE BACK FILL	CU.M.			
STRUCTURE WORKS				
STRUCTURAL CONCRETE Fcu=300 kg/cm2	CU.M.	1288.00	30.00	1318.00
REINFORCING BARS	M.T.	258.00	5.00	262.00
ASPHALT CONCRETE	*	305.00	47.00	351.00
BASE COURSE	*	85.00	13.00	98.00
SUB BASE COURSE				

KATAHIRA & ENGINEERS INTERNATIONAL
PRICE WATERHOUSE COOPERS ADVISORY CO., LTD.

JICA
JAPAN INTERNATIONAL COOPERATION AGENCY

GENERAL AUTHORITY FOR ROADS BRIDGES AND LAND TRANSPORT (GARBLT)
MINISTRY OF TRANSPORT
ARAB REPUBLIC OF EGYPT

PROJECT AND LOCATION :	SCALE :	DRAWING TITLE :	DRAWING NO :
FEASIBILITY STUDY ON HIGH PRIORITY URBAN TOLL EXPRESSWAYS IN CAIRO E1-2	1:3000 1:150 1:200 FULL SIZE A3	MAIN RAMP FROM 6TH OCTOBER BRIDGE APPROACH EMBANKMENT LAYOUT AND RETAINING WALL DETAIL	E1-2/S-05
			SHEET NO : 5 / 48

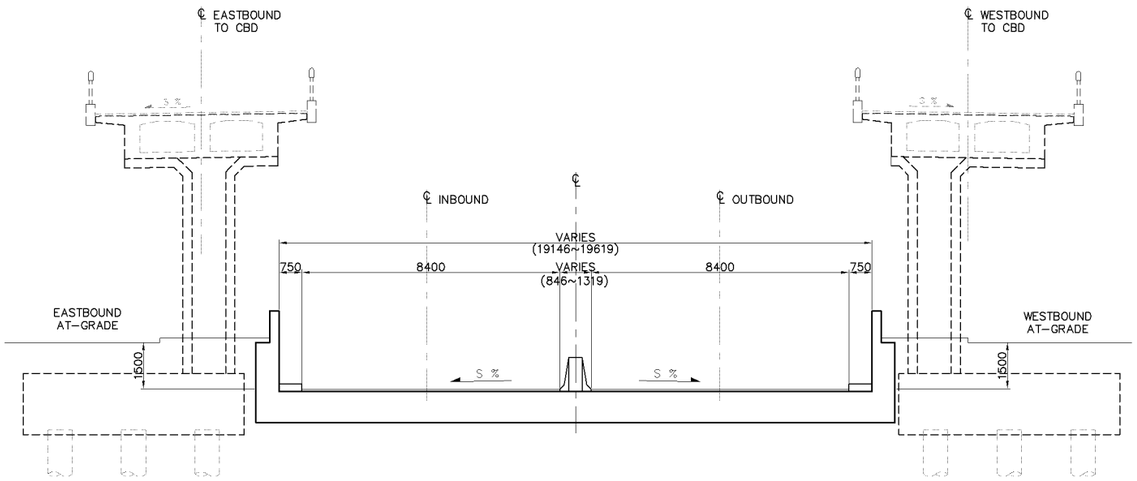

1 SCALE

TYPICAL SECTION – STA. 0+307.40 TO STA. 0+337.40

1:200

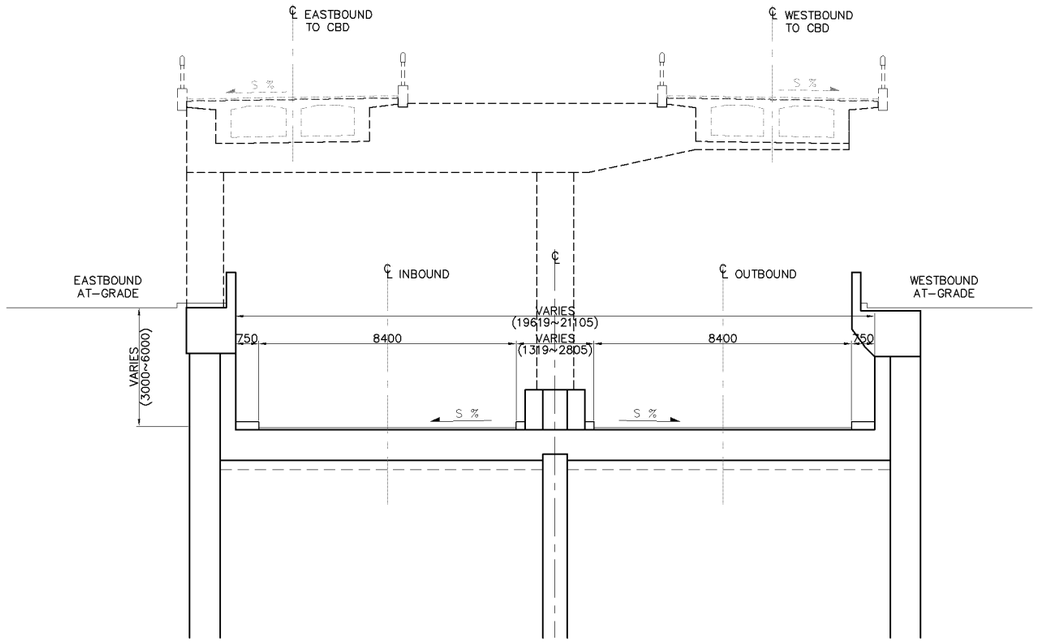

2 SCALE

TYPICAL SECTION – STA. 0+337.40 TO STA. 0+414.20

1:200

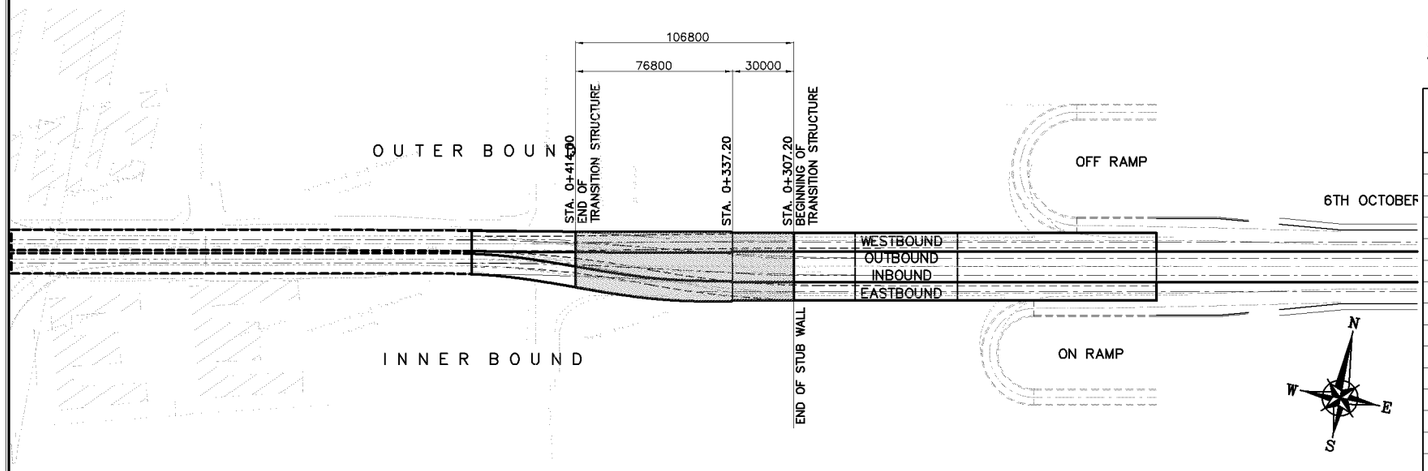

A SCALE

P L A N INBOUND & OUTBOUND (STA. 0+307.40 – STA. 0+397.40)

1:3000

SUMMARY OF QUANTITIES
TRANSITION STRUCTUTRE (LENGTH = 106.80 M.)

DESCRIPTION	UNIT	QUANTITIES		
		STUB WALL	OPEN CUT	TOTAL
EARTH WORKS				
STRUCTURE EXCAVATION	CU.M.	955.00	11035.00	11990.00
FOUNDATION FILL	CU.M.			
STRUCTURE BACK FILL	CU.M.			
STRUCTURE WORKS				
STRUCTURAL CONCRETE Fcu=300 kg/cm2	CU.M.	679.00	2235.00	2914.00
REINFORCING BARS	M.T.	102.00	447.00	549.00
DIAPHRAGM WALL	CU.M.		2396.00	2396.00
ASPHALT	CU.M.	45.00	119.00	164.00
CAST IN PLACE BORED PILE (800MM DIA.)	M.		240.00	240.00
PILE LOAD TEST–STATIC (800MM DIA.)	No.		4.00	4.00
CAST IN PLACE BORED PILE (1000MM DIA.)	M.		240.00	240.00
PILE LOAD TEST–STATIC (1000MM DIA.)	No.		3.00	3.00

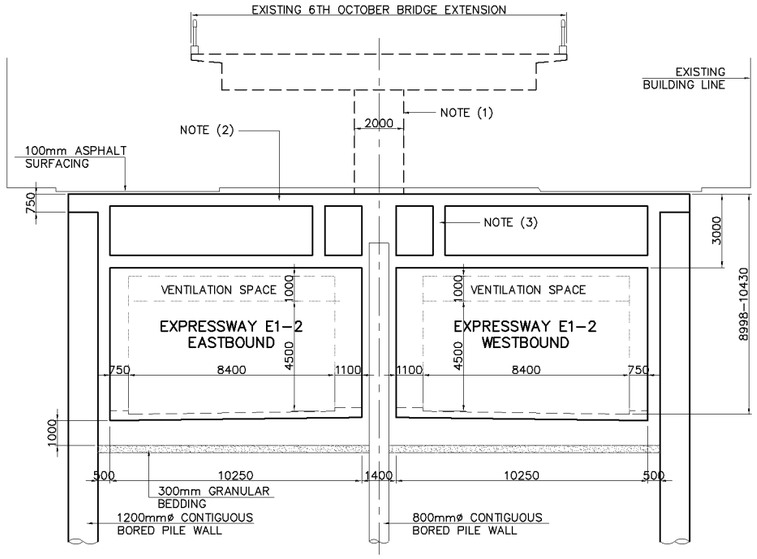

3 SCALE

TYPICAL SECTION @ PIER (STA. 0+546.80 – STA. 0+689.95)

1:250

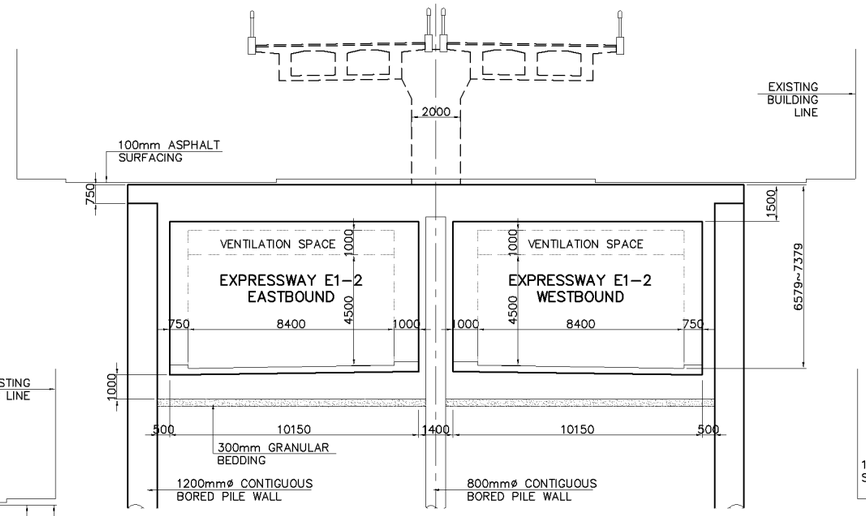

1 SCALE

TYPICAL SECTION @ PIER (STA. 0+441.65 – STA. 0+465.00)

1:250

NOTES :

NOTE (1) : EXISTING BRIDGE PIER AND FOUNDATION TO BE DEMOLISHED AND PIER COLUMN RECONSTRUCTED MONOLITHIC WITH TUNNEL TOP SLAB STRUCTURE

NOTE (2) : VOIDED REINFORCED CONCRETE TOP SLAB (MONOLITHIC WITH RECONSTRUCTED BRIDGE PIER)

NOTE (3) : DIAPHRAGM AT LOCATION OF TEMPORARY DECK SUPPORTS

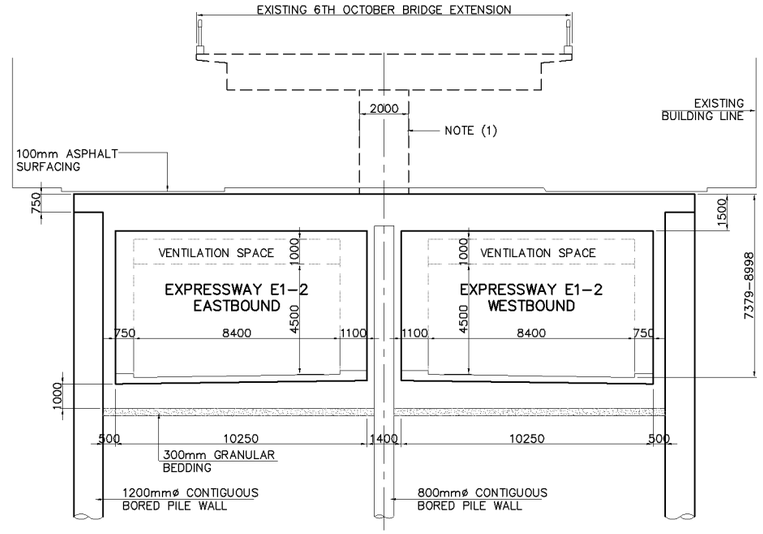

2 SCALE

TYPICAL SECTION @ PIER (STA. 0+465.00 – STA. 0+546.80)

1:250

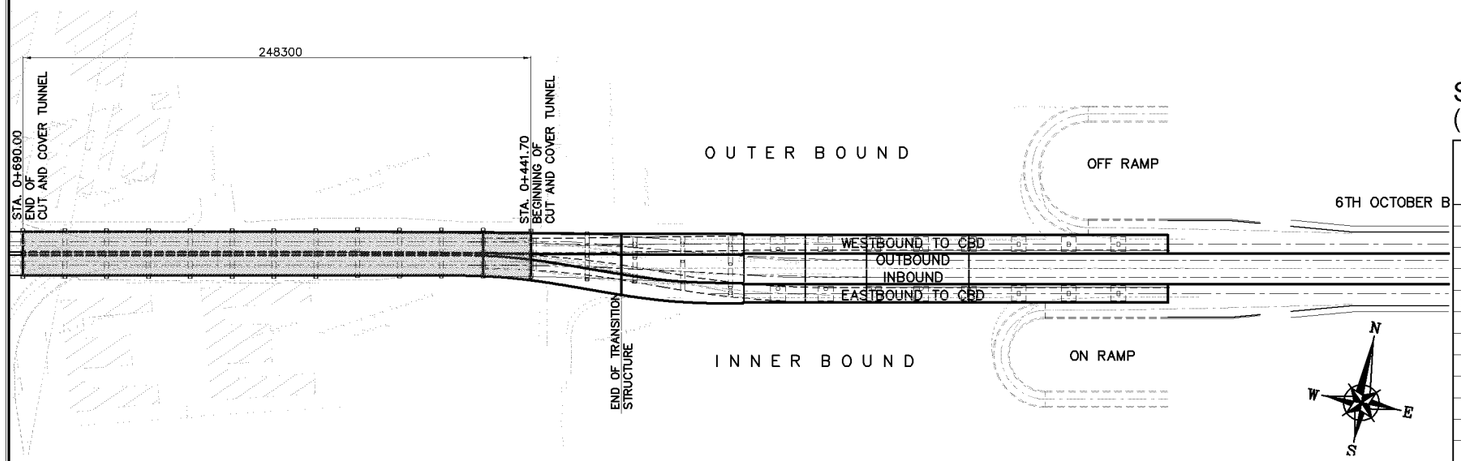

A SCALE

P L A N INBOUND & OUTBOUND (STA. 0+441.65 – STA. 0+689.95)

1:3000

S U M M A R Y O F Q U A N T I T I E S - C U T A N D C O V E R (LENGTH = 102.60 M.)

D E S C R I P T I O N	UNIT	Q U A N T I T I E S			
		1	2	3	TOTAL
EARTH WORKS					
STRUCTURE EXCAVATION	CU.M.	252	1042	2147	3442
*					
STRUCTURE WORKS					
STRUCTURAL CONRETE Fcu=300 kg/cm2	CU.M.	1459	5112	8947	15519
REINFORCING BARS	M.T.	292	1022	1789	3104
CAST IN PLACE BORED PILE (1200MM DIA.)	M.	160	1380	2400	3940
PILE LOAD TEST–STATIC (1200MM DIA.)	No.	2	4	6	12
CAST IN PLACE BORED PILE (800MM DIA.)	M.	120	2060	3580	5760
PILE LOAD TEST–STATIC (800MM DIA.)	No.	2	4	6	12
DIAPHRAGM	CU.M.	1513			1513
ASPHALT	CU.M.	41	143	251	435

KATAHIRA & ENGINEERS INTERNATIONAL PRICE WATERHOUSE COOPERS ADVISORY CO., LTD.	JICA JAPAN INTERNATIONAL COOPERATION AGENCY	GENERAL AUTHORITY FOR ROADS BRIDGES AND LAND TRANSPORT (GARBLT) MINISTRY OF TRANSPORT ARAB REPUBLIC OF EGYPT	PROJECT AND LOCATION : FEASIBILITY STUDY ON HIGH PRIORITY URBAN TOLL EXPRESSWAYS IN CAIRO E1-2	SCALE : 1:3000 1:250 FULL SIZE A3	DRAWING TITLE : CUT AND COVER TUNNEL SECTIONS (STA. 0+441.70 TO - STA. 0+690.00)	DRAWING NO : E1-2/S-07 SHEET NO : 7 / 48

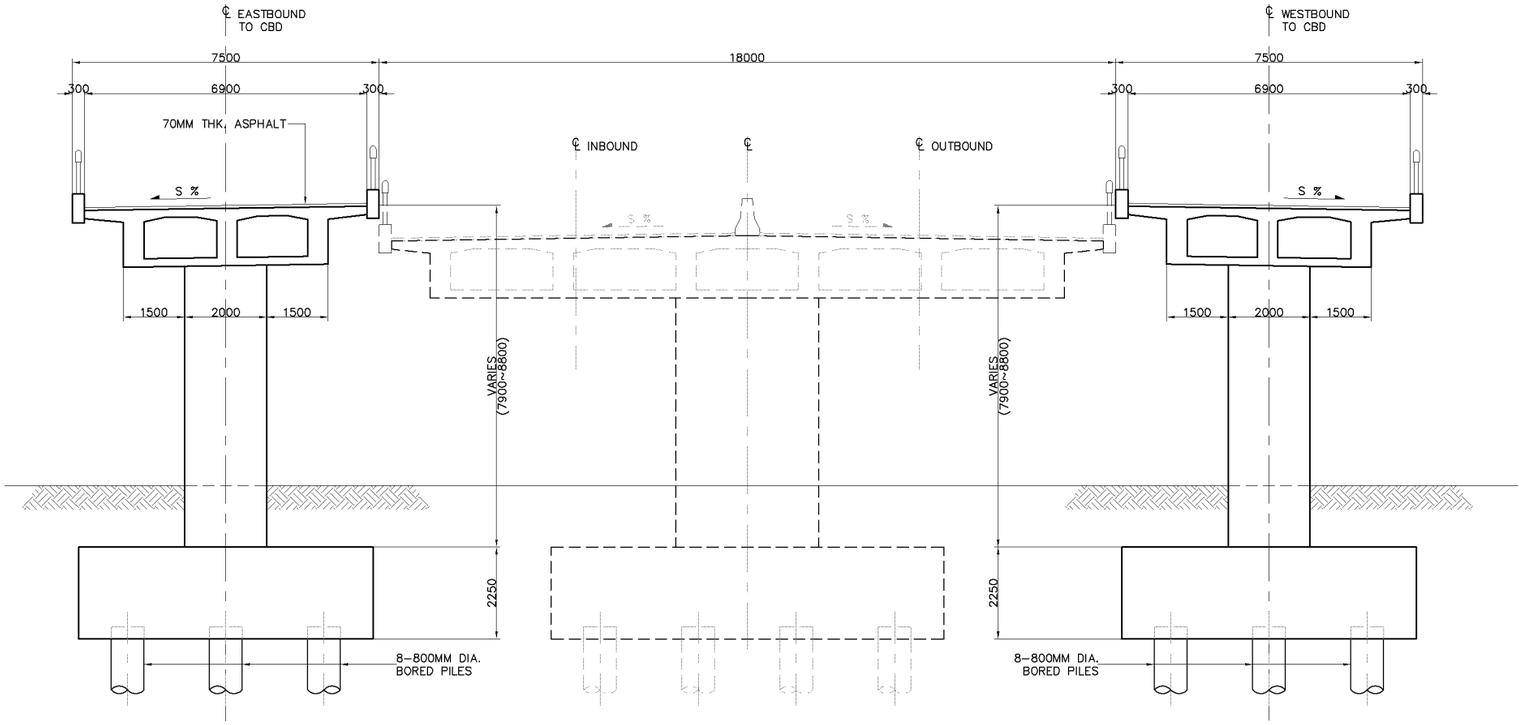

1 SCALE **TYPICAL PIER ELEVATION** 1:150

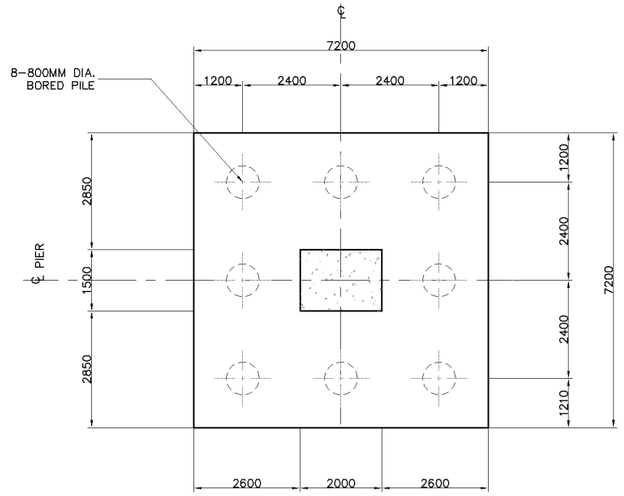

2 SCALE **PLAN ON FOOTING** 1:150

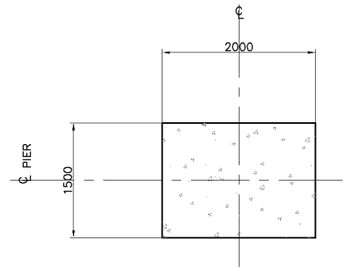

3 SCALE **COLUMN SECTION** 1:80

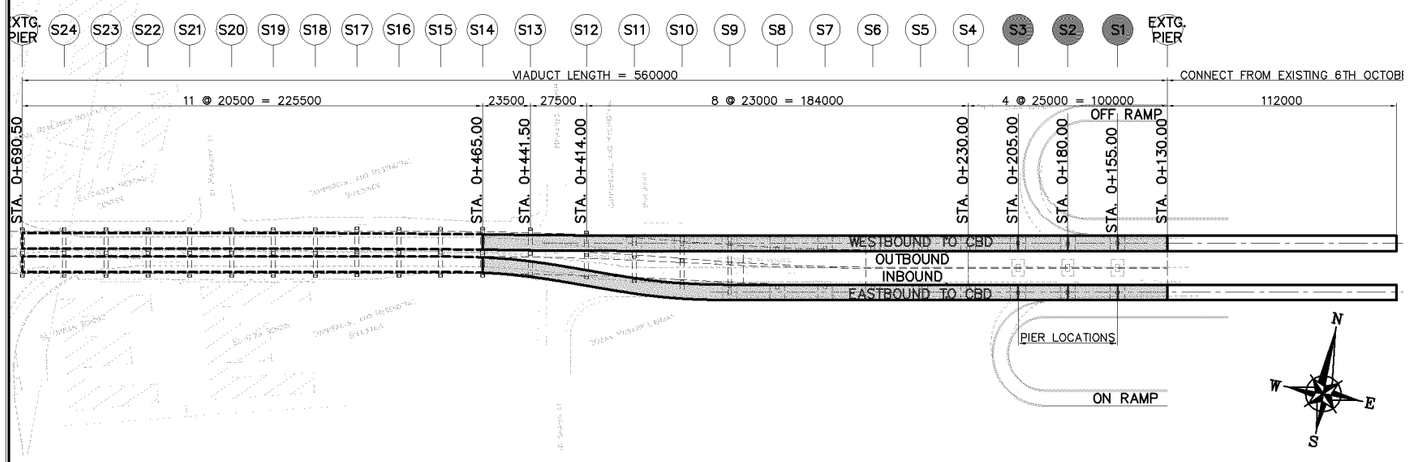

A SCALE **PLAN LAYOUT ON SIDE RAMP EASTBOUND & WESTBOUND** 1:3000

SUMMARY OF QUANTITIES - 6 PIERS (S1 - S3)

DESCRIPTION	UNIT	QUANTITIES		
		PILE CAP	COLUMN	TOTAL
EARTH WORKS				
STRUCTURE EXCAVATION	CU.M.	1,166.00		1,166.00
FOUNDATION FILL	CU.M.			
STRUCTURE BACK FILL	CU.M.	440.00		440.00
STRUCTURE WORKS				
CAST IN PLACE BORED PILES (800MM DIA.)	M.	960.00		960.00
PILE LOAD TEST-STATIC (800MM DIA.)	No.	1.00		1.00
STRUCTURAL CONCRETE Fcu=300 kg/cm2	CU.M.	700.00		700.00
STRUCTURAL CONCRETE Fcu=450 kg/cm2	CU.M.		126.00	126.00
REINFORCING BARS	M.T.	140.00	32.00	171.00

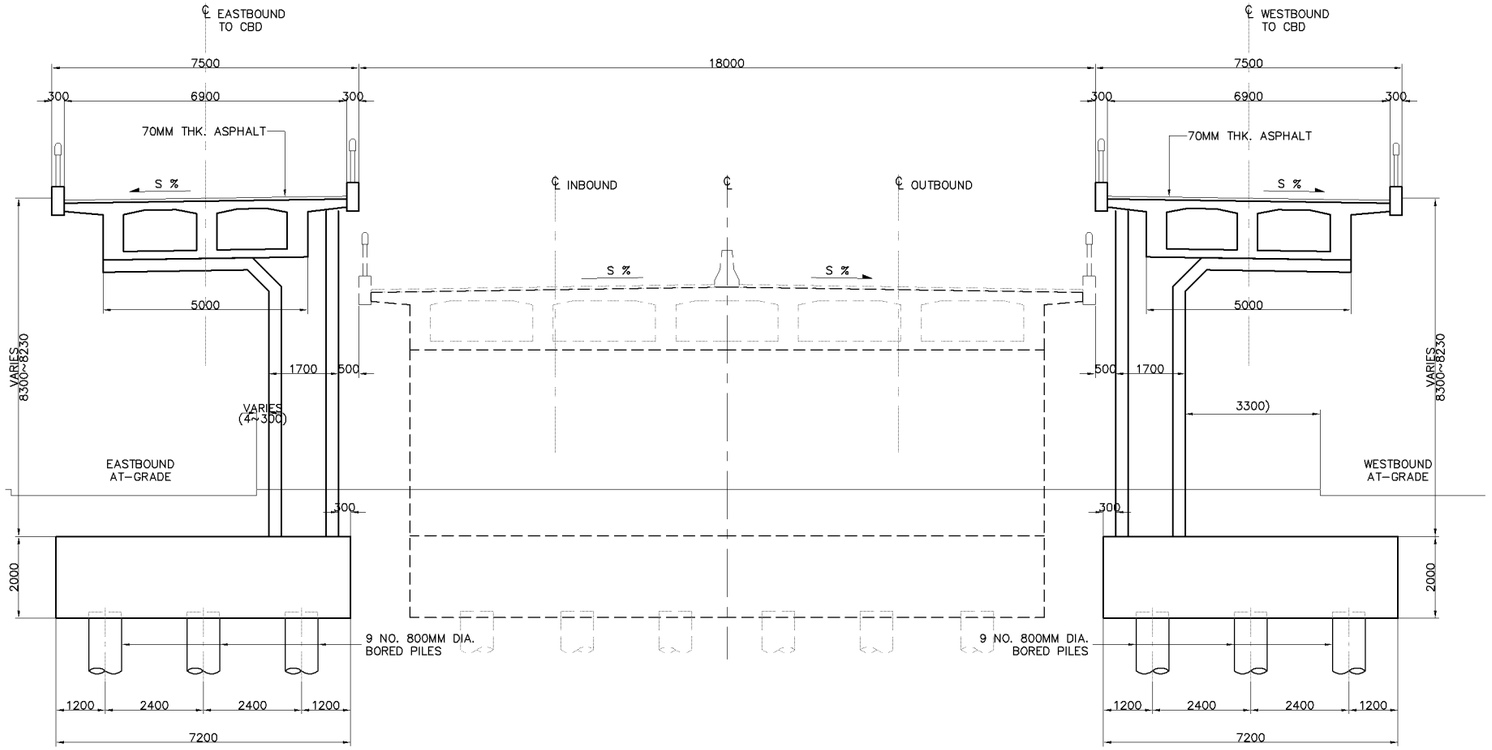

1 SCALE **TYPICAL PIER CANTILEVER ELEVATION** 1:150

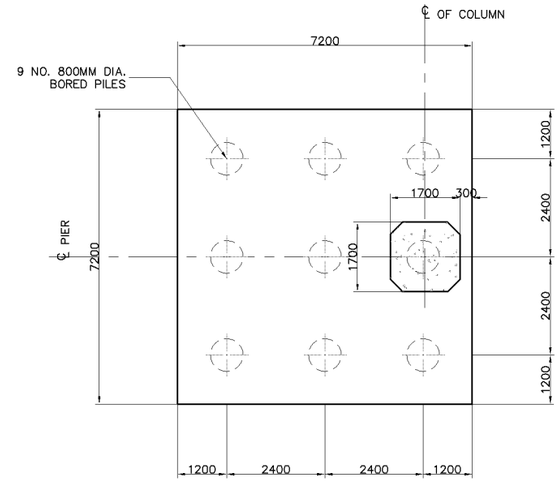

2 SCALE **PLAN ON PILE CAP** 1:150

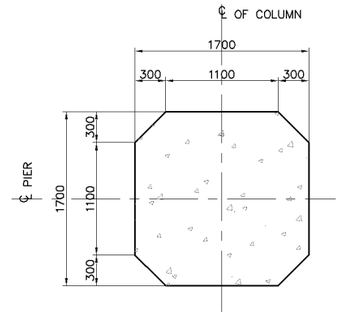

3 SCALE **COLUMN SECTION** 1:60

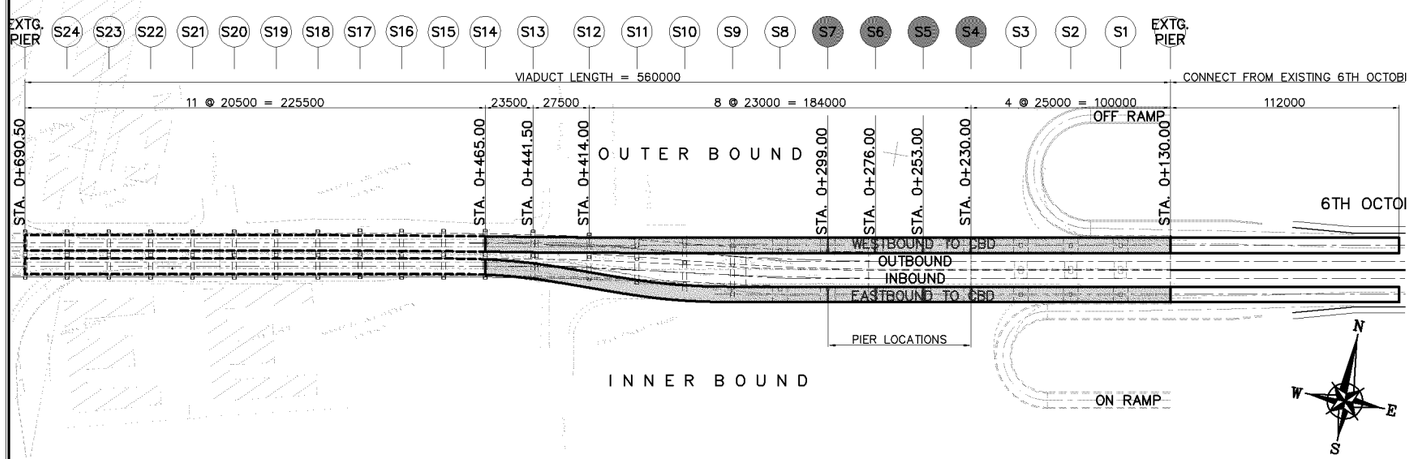

A SCALE **PLAN LAYOUT ON SIDE RAMP EASTBOUND & WESTBOUND** 1:3000

SUMMARY OF QUANTITIES - 8 PIERS (S4 - S7)

DESCRIPTION	UNIT	QUANTITIES		
		PILE CAP	COLUMN/ CANTILEVER	TOTAL
EARTH WORKS				
STRUCTURE EXCAVATION	CU.M.	1,244.00		1,244.00
FOUNDATION FILL	CU.M.			
STRUCTURE BACK FILL	CU.M.	392.00		392.00
STRUCTURE WORKS				
CAST IN PLACE BORED PILES (800MM DIA.)	M.	1,440.00		1,440.00
PILE LOAD TEST-STATIC (800MM DIA.)	No.	1.00		1.00
STRUCTURAL CONCRETE Fcu=300 kg/cm2	CU.M.	829.00		829.00
STRUCTURAL CONCRETE Fcu=450 kg/cm2	CU.M.		307.00	307.00
REINFORCING BARS	M.T.	166.00	77.00	243.00

KATAHIRA & ENGINEERS INTERNATIONAL
PRICE WATERHOUSE COOPERS ADVISORY CO., LTD.

JICA
JAPAN INTERNATIONAL COOPERATION AGENCY

GENERAL AUTHORITY FOR ROADS BRIDGES AND LAND TRANSPORT (GARBLT)
MINISTRY OF TRANSPORT
ARAB REPUBLIC OF EGYPT

PROJECT AND LOCATION : FEASIBILITY STUDY ON HIGH PRIORITY URBAN TOLL EXPRESSWAYS IN CAIRO E1-2

SCALE : 1:150 1:60 1:3000 FULL SIZE A3

DRAWING TITLE : SIDE RAMPS PIER LAYOUT & SECTIONS (STA. 0+230.00 - STA. 0+299.00) (2 OF 8)

DRAWING NO : E1-2/S-09

SHEET NO : 9 / 48

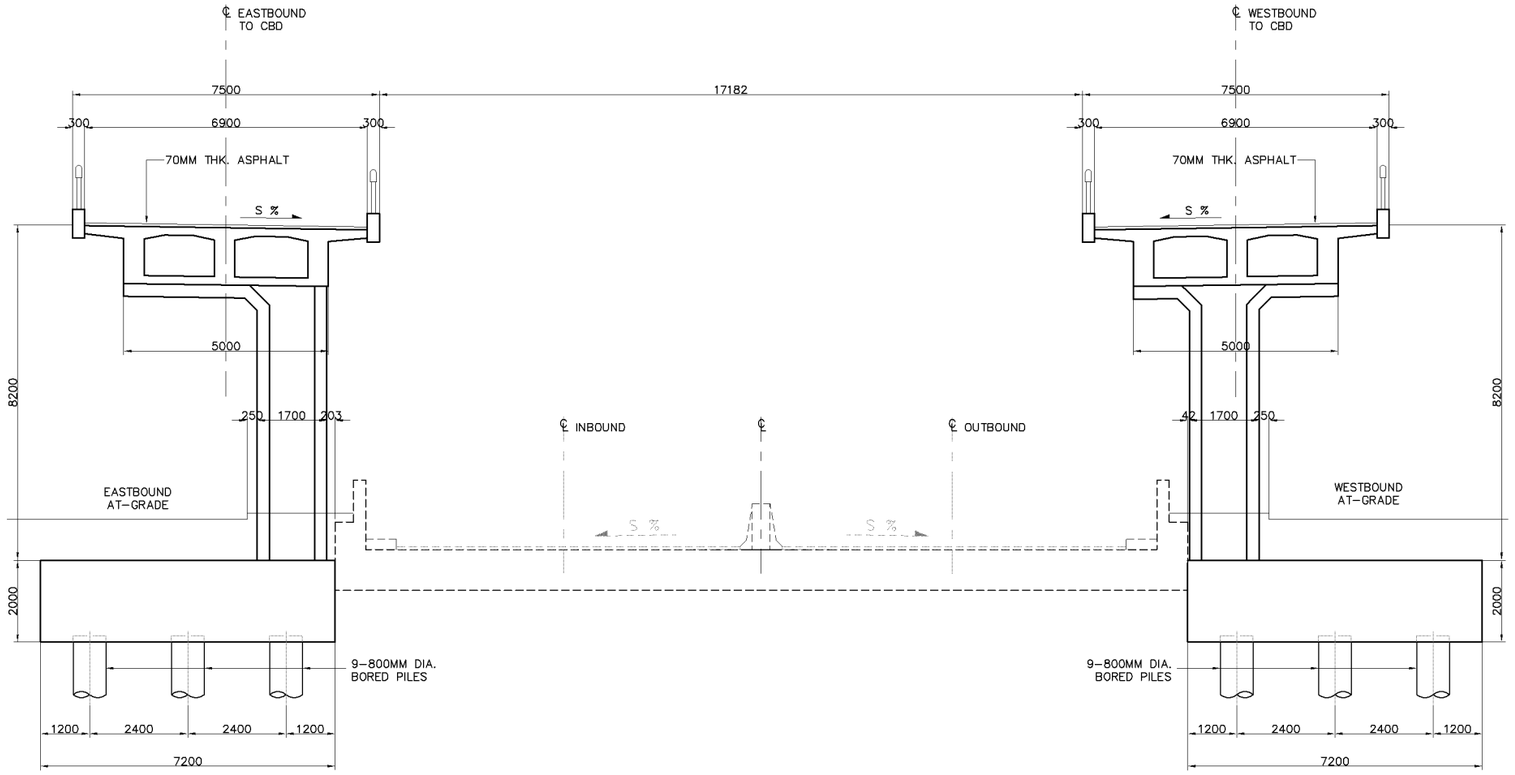

1 SCALE **TYPICAL PIER ELEVATION** 1:150

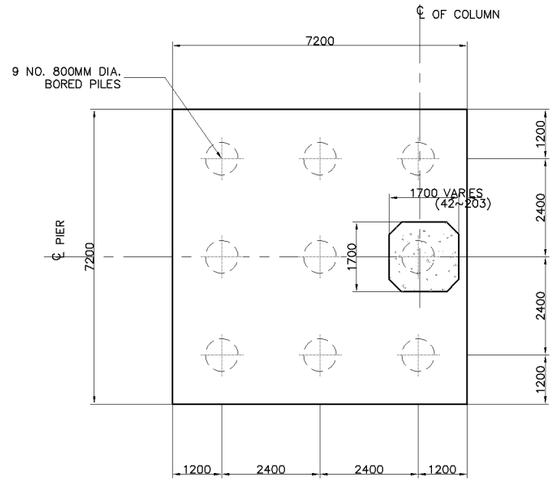

2 SCALE **PLAN ON PILE CAP** 1:150

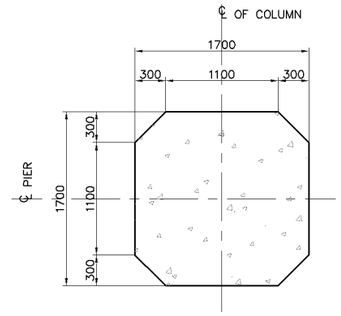

3 SCALE **COLUMN SECTION** 1:60

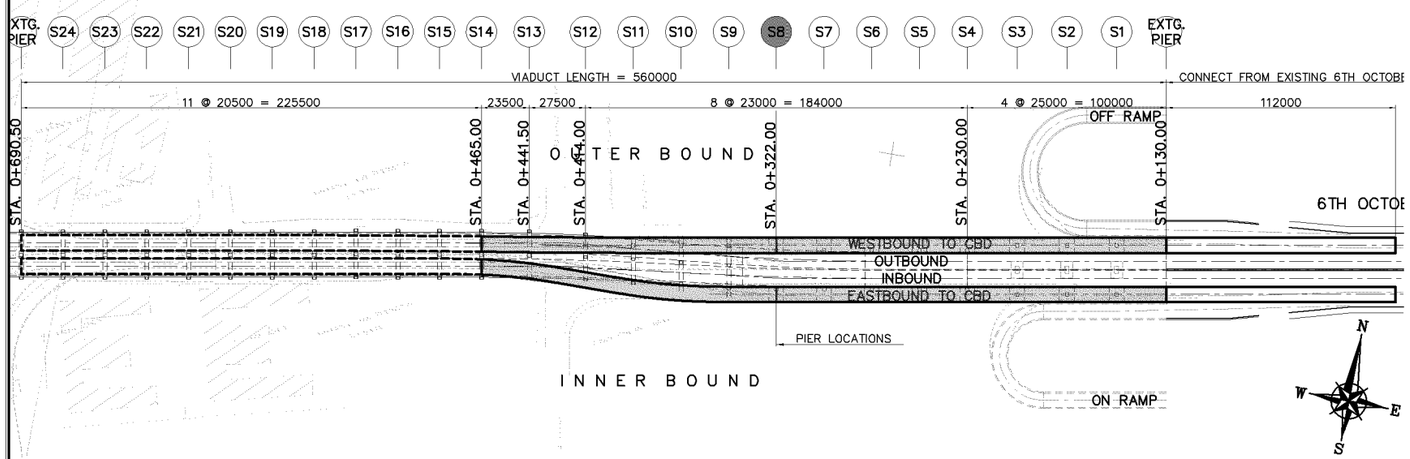

A SCALE **PLAN LAYOUT ON SIDE RAMP EASTBOUND & WESTBOUND** 1:3000

SUMMARY OF QUANTITIES - 2 PIERS (S8)

DESCRIPTION	UNIT	QUANTITIES		
		PILE CAP	COLUMN	TOTAL
EARTH WORKS				
STRUCTURE EXCAVATION	CU.M.	311.00		311.00
FOUNDATION FILL	CU.M.			
STRUCTURE BACKFILL	CU.M.	98.00		98.00
STRUCTURE WORKS				
CAST IN PLACE BORED PILES (800MM DIA.)	M.	360.00		360.00
PILE LOAD TEST-STATIC (800MM DIA.)	No.	1.00		1.00
STRUCTURAL CONCRETE Fcu=300 kg/cm2	CU.M.	207.00		207.00
STRUCTURAL CONCRETE Fcu=450 kg/cm2	CU.M.		76.00	76.00
REINFORCING BARS	M.T.	41.00	19.00	61.00

KATAHIRA & ENGINEERS INTERNATIONAL
PRICE WATERHOUSE COOPERS ADVISORY CO., LTD.

JICA
JAPAN INTERNATIONAL COOPERATION AGENCY

GENERAL AUTHORITY FOR ROADS BRIDGES AND LAND TRANSPORT (GARBLT)
MINISTRY OF TRANSPORT
ARAB REPUBLIC OF EGYPT

PROJECT AND LOCATION : FEASIBILITY STUDY ON HIGH PRIORITY URBAN TOLL EXPRESSWAYS IN CAIRO E1-2

SCALE : 1:150 1:60 1:3000 FULL SIZE A3

DRAWING TITLE : SIDE RAMPS PIER LAYOUT & SECTIONS (STA. 0+322.00) (3 OF 8)

DRAWING NO : E1-2/S-10

SHEET NO : 10 / 48

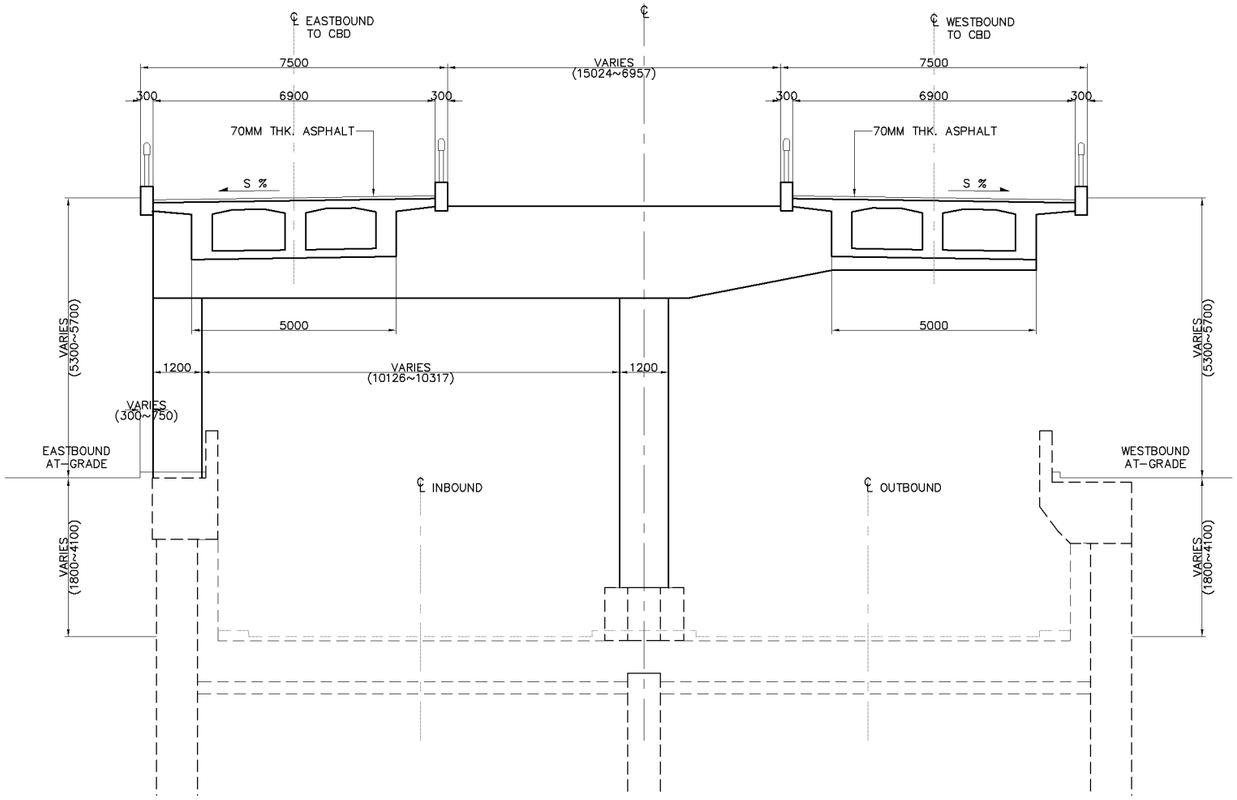

1 SCALE **TYPICAL PIER ELEVATION** 1:150

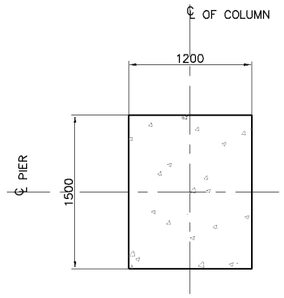

2 SCALE **COLUMN SECTION** 1:60

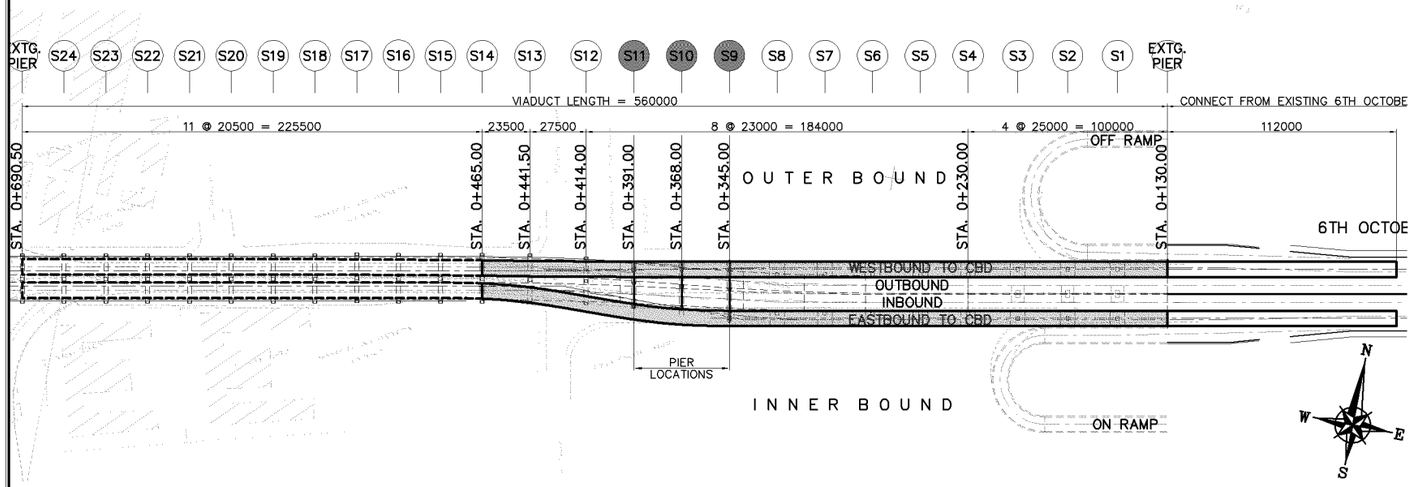

A SCALE **PLAN LAYOUT ON SIDE RAMP EASTBOUND & WESTBOUND** 1:3000

SUMMARY OF QUANTITIES - 3 PIERS (S9-S11)

DESCRIPTION	UNIT	QUANTITIES		
		COLUMN	COPING	TOTAL
STRUCTURE WORKS				
CAST IN PLACE BORED PILES (800MM DIA.)	M.			
PILE LOAD TEST-STATIC (800MM DIA.)	No.			
STRUCTURAL CONCRETE Fcu=300 kg/cm2	CU.M.			
REINFORCING BARS	M.T.	19.00	66.00	85.00
STRUCTURAL CONCRETE Fcu=450 kg/cm2	CU.M.	76.00	330.00	406.00
PRESTRESSING STEEL – LONGITUDINAL	M.T.		10.00	10.00
PRESTRESSING STEEL – TRANSVERSE	M.T.			

KATAHIRA & ENGINEERS INTERNATIONAL
PRICE WATERHOUSE COOPERS ADVISORY CO., LTD.

JICA
JAPAN INTERNATIONAL COOPERATION AGENCY

GENERAL AUTHORITY FOR ROADS BRIDGES AND LAND TRANSPORT (GARBLT)
MINISTRY OF TRANSPORT
ARAB REPUBLIC OF EGYPT

PROJECT AND LOCATION : FEASIBILITY STUDY ON HIGH PRIORITY URBAN TOLL EXPRESSWAYS IN CAIRO E1-2

SCALE : 1:150 1:60 1:3000 FULL SIZE A3

DRAWING TITLE : SIDE RAMPS PIER LAYOUT & SECTIONS (STA. 0+345.00 - STA. 0+391.00) (4 OF 8)

DRAWING NO : E1-2/S-11

SHEET NO : 11 / 48

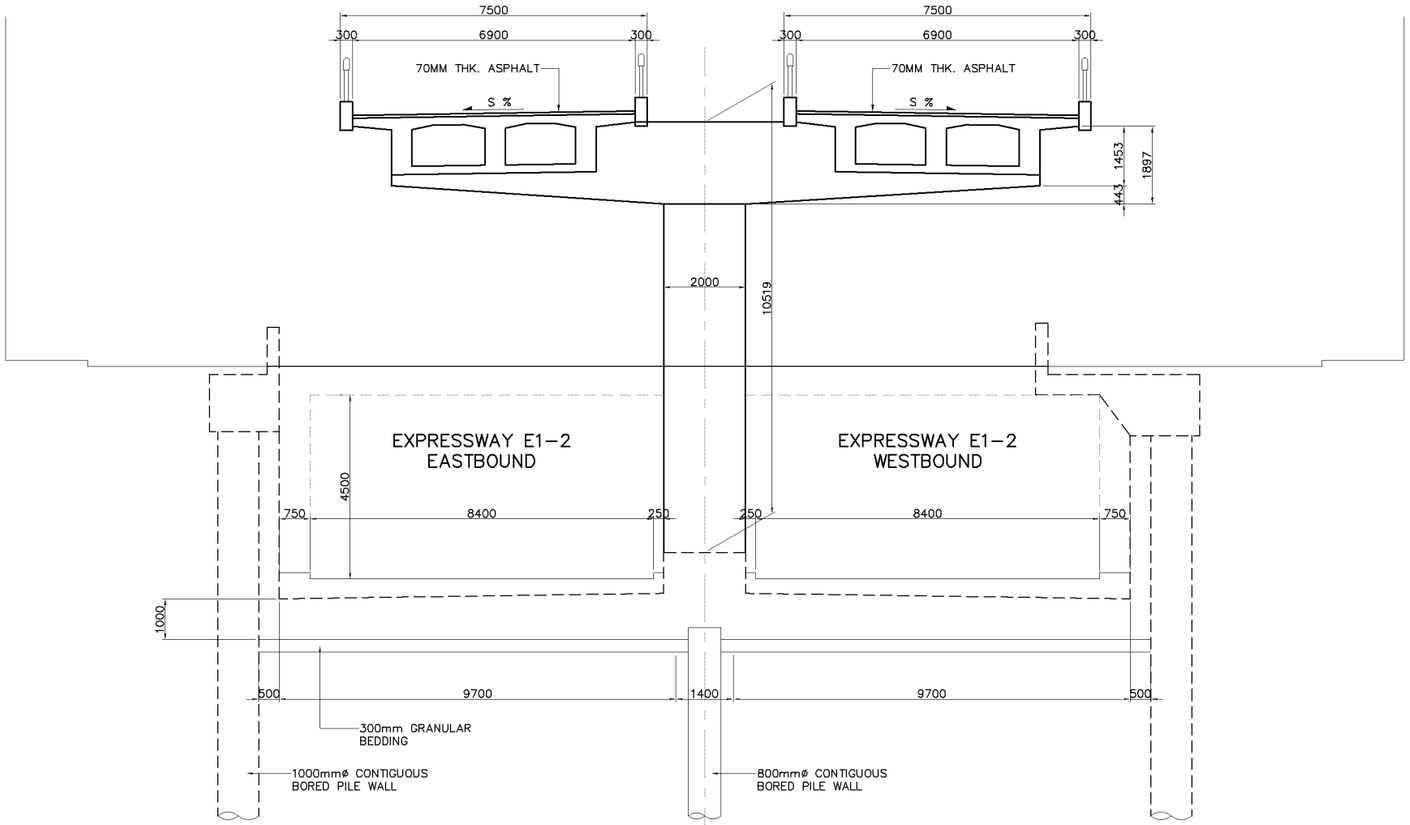

1 SCALE **TYPICAL PIER ELEVATION** 1:150

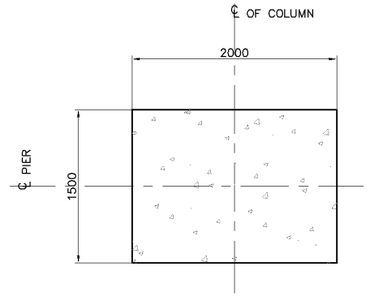

2 SCALE **COLUMN SECTION** 1:60

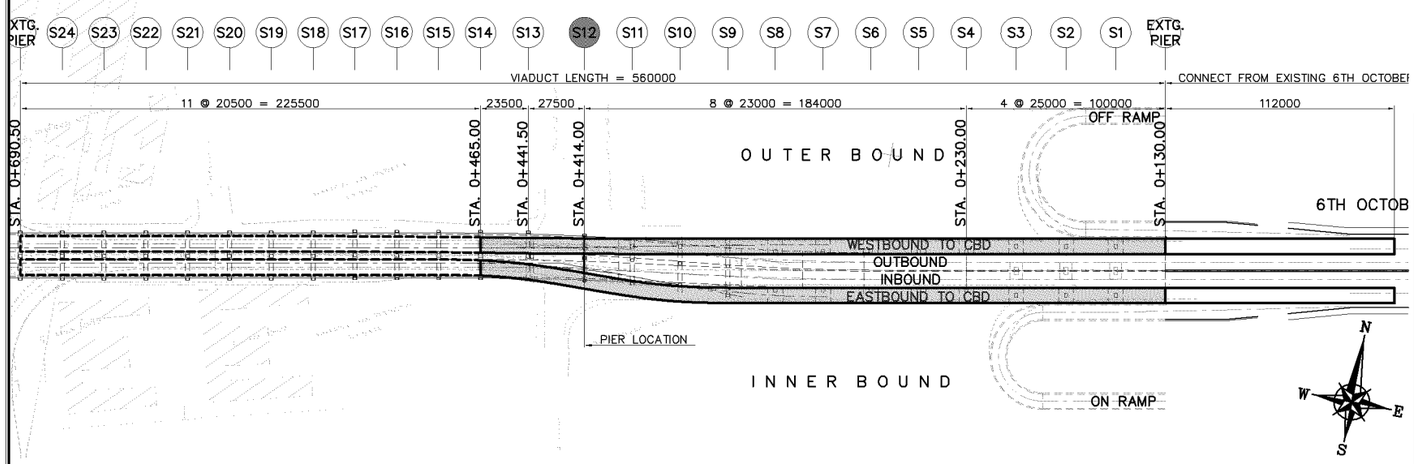

A SCALE **PLAN LAYOUT ON SIDE RAMP EASTBOUND & WESTBOUND** 1:3000

SUMMARY OF QUANTITIES - 1 PIER (S12)

DESCRIPTION	UNIT	QUANTITIES		
		COLUMN	COPING	TOTAL
STRUCTURE WORKS				
CAST IN PLACE BORED PILES (800MM DIA.)	M.			
PILE LOAD TEST-STATIC (800MM DIA.)	No.			
STRUCTURAL CONCRETE Fcu=300 kg/cm2	CU.M.			
REINFORCING BARS	M.T.	7.00	9.00	16.00
STRUCTURAL CONCRETE Fcu=450 kg/cm2	CU.M.	27.00	47.00	74.00
PRESTRESSING STEEL – LONGITUDINAL	M.T.		1.00	1.00

KATAHIRA & ENGINEERS INTERNATIONAL
PRICE WATERHOUSE COOPERS ADVISORY CO., LTD.

JICA
JAPAN INTERNATIONAL COOPERATION AGENCY

GENERAL AUTHORITY FOR ROADS BRIDGES AND LAND TRANSPORT (GARBLT)
MINISTRY OF TRANSPORT
ARAB REPUBLIC OF EGYPT

PROJECT AND LOCATION : FEASIBILITY STUDY ON HIGH PRIORITY URBAN TOLL EXPRESSWAYS IN CAIRO E1-2

SCALE : 1:150 1:60 1:3000 FULL SIZE A3

DRAWING TITLE : SIDE RAMPS PIER LAYOUT & SECTIONS (STA. 0+414.00) (5 OF 8)

DRAWING NO : E1-2/S-12

SHEET NO : 12 / 48

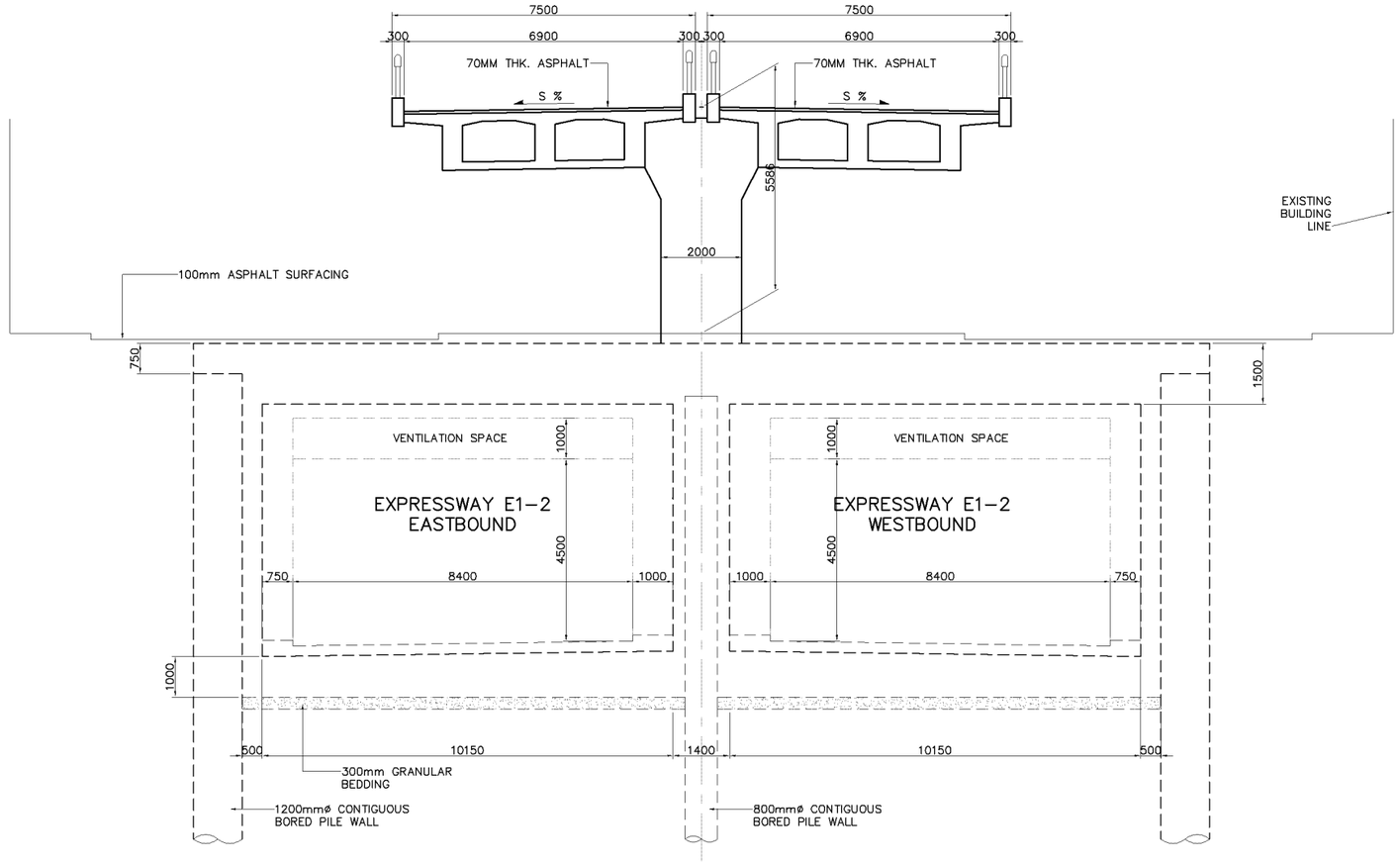

1 SCALE **TYPICAL PIER ELEVATION** 1:150

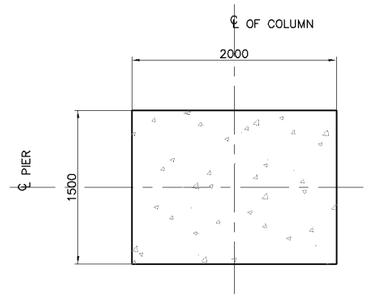

2 SCALE **COLUMN SECTION** 1:60

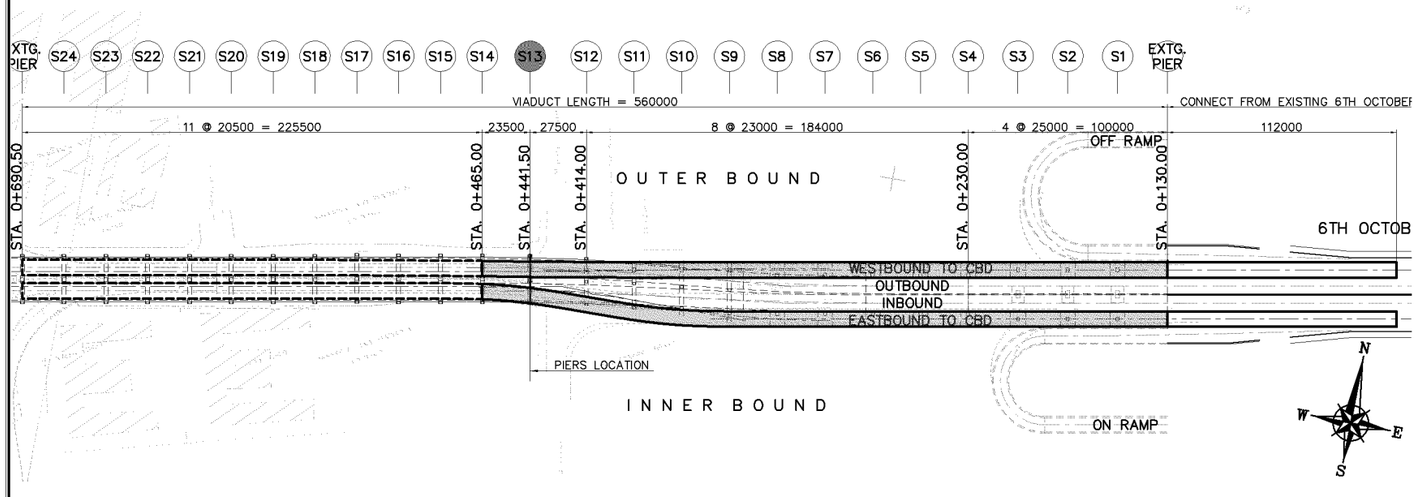

A SCALE **PLAN LAYOUT ON SIDE RAMP EASTBOUND & WESTBOUND** 1:3000

SUMMARY OF QUANTITIES - 1 PIER (S13)

DESCRIPTION	UNIT	QUANTITIES		
		COLUMN	COPING	TOTAL
STRUCTURE WORKS				
STRUCTURAL CONCRETE Fcu=300 kg/cm2	CU.M.		29.00	29.00
REINFORCING BARS	M.T.	4.00	6.00	10.00
STRUCTURAL CONCRETE Fcu=450 kg/cm2	CU.M.	18.00		18.00
PRESTRESSING STEEL – LONGITUDINAL	M.T.			
PRESTRESSING STEEL – TRANSVERSE	M.T.			

KATAHIRA & ENGINEERS INTERNATIONAL
PRICE WATERHOUSE COOPERS ADVISORY CO., LTD.

JICA
JAPAN INTERNATIONAL COOPERATION AGENCY

GENERAL AUTHORITY FOR ROADS BRIDGES AND LAND TRANSPORT (GARBLT)
MINISTRY OF TRANSPORT
ARAB REPUBLIC OF EGYPT

PROJECT AND LOCATION : FEASIBILITY STUDY ON HIGH PRIORITY URBAN TOLL EXPRESSWAYS IN CAIRO E1-2

SCALE : 1:150 1:60 1:3000 FULL SIZE A3

DRAWING TITLE : SIDE RAMPS PIER LAYOUT & SECTIONS (STA. 0+441.50) (6 OF 8)

DRAWING NO : E1-2/S-13

SHEET NO : 13 / 48

NOTE :

NOTE (1) : EXISTING BRIDGE PIER AND FOUNDATION TO BE DEMOLISHED AND PIER COLUMN RECONSTRUCTED MONOLITHIC WITH TUNNEL TOP SLAB STRUCTURE

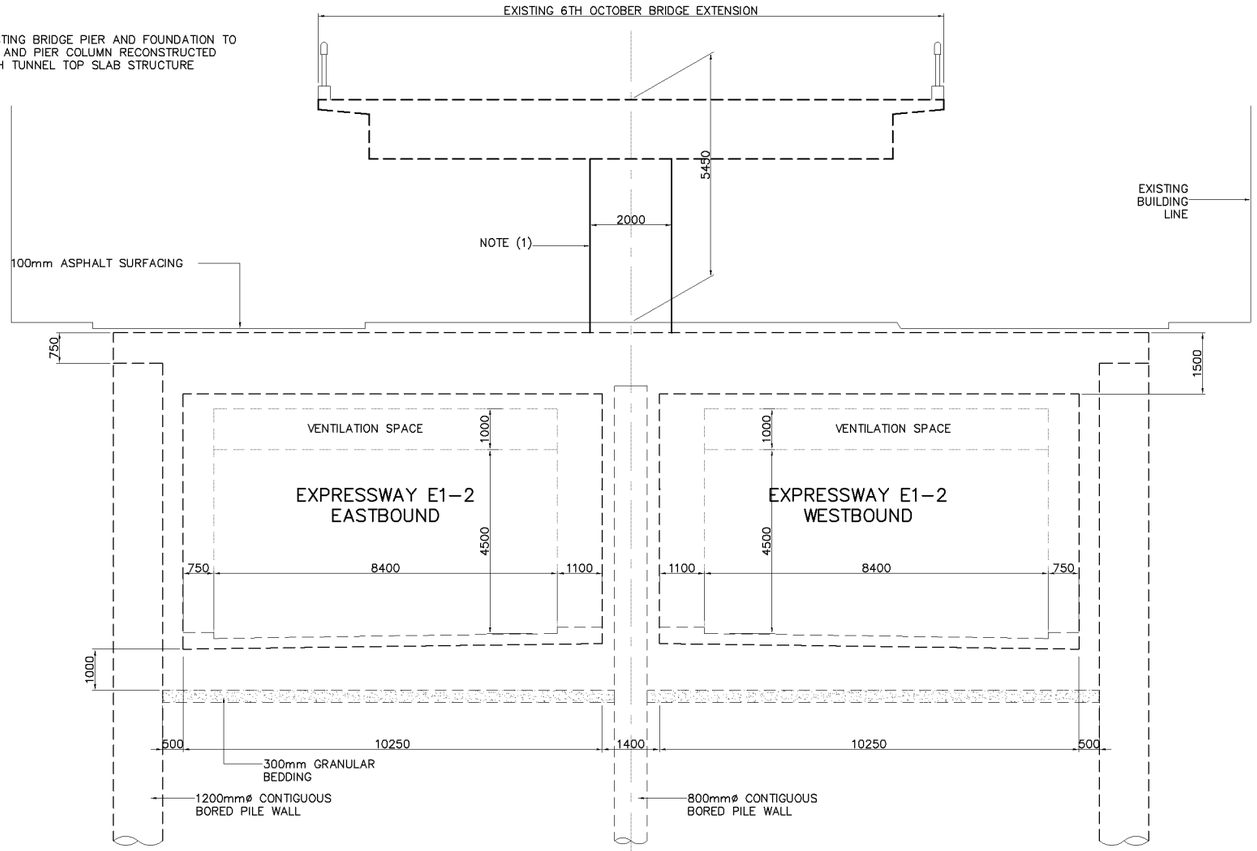

1 SCALE **TYPICAL PIER ELEVATION** 1:150

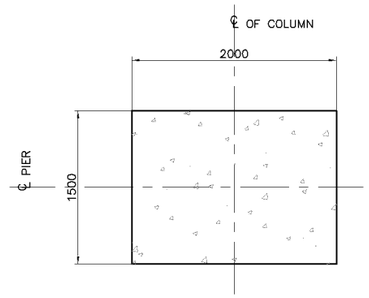

2 SCALE **COLUMN SECTION** 1:60

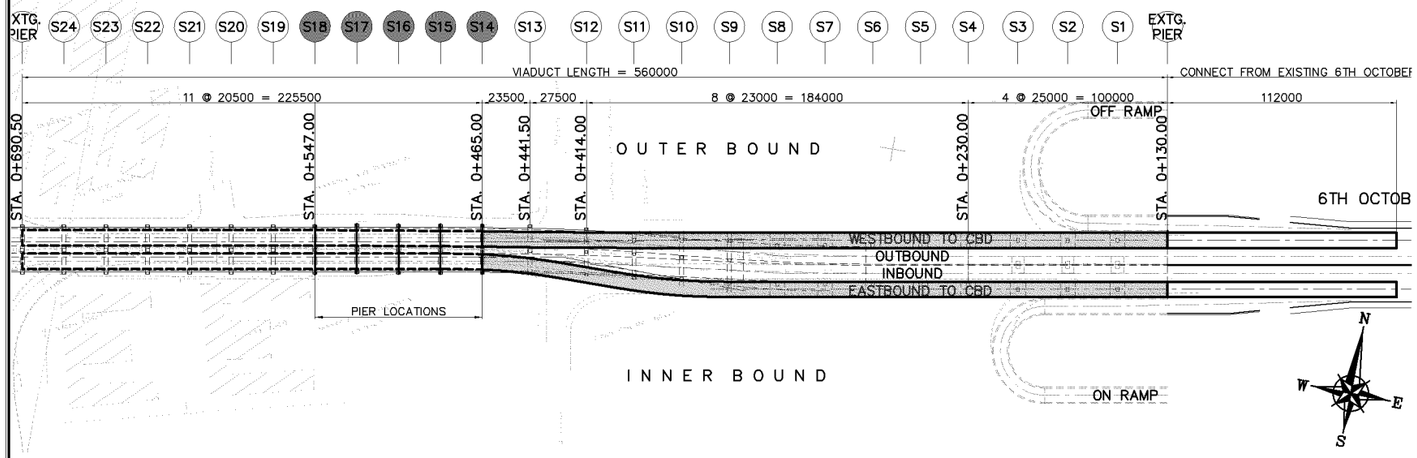

A SCALE **PLAN LAYOUT ON SIDE RAMP EASTBOUND & WESTBOUND** 1:3000

SUMMARY OF QUANTITIES - 5 PIERS (S14-S18)

DESCRIPTION	UNIT	QUANTITIES		
		COLUMN	COPING	TOTAL
STRUCTURE WORKS				
STRUCTURAL CONCRETE Fcu=300 kg/cm2	CU.M.			
REINFORCING BARS	M.T.	22.00		22.00
STRUCTURAL CONCRETE Fcu=450 kg/cm2	CU.M.	90.00		90.00
PRESTRESSING STEEL – LONGITUDINAL	M.T.			
PRESTRESSING STEEL – TRANSVERSE	M.T.			

KATAHIRA & ENGINEERS INTERNATIONAL
PRICE WATERHOUSE COOPERS ADVISORY CO., LTD.

JICA
JAPAN INTERNATIONAL COOPERATION AGENCY

GENERAL AUTHORITY FOR ROADS BRIDGES AND LAND TRANSPORT (GARBLT)
MINISTRY OF TRANSPORT
ARAB REPUBLIC OF EGYPT

PROJECT AND LOCATION : FEASIBILITY STUDY ON HIGH PRIORITY URBAN TOLL EXPRESSWAYS IN CAIRO E1-2

SCALE : 1:150 1:60 1:3000 FULL SIZE A3

DRAWING TITLE : SIDE RAMPS PIER LAYOUT & SECTIONS (STA. 0+465.00 - STA. 0+547.00) (7 OF 8)

DRAWING NO : E1-2/S-14

SHEET NO : 14 / 48

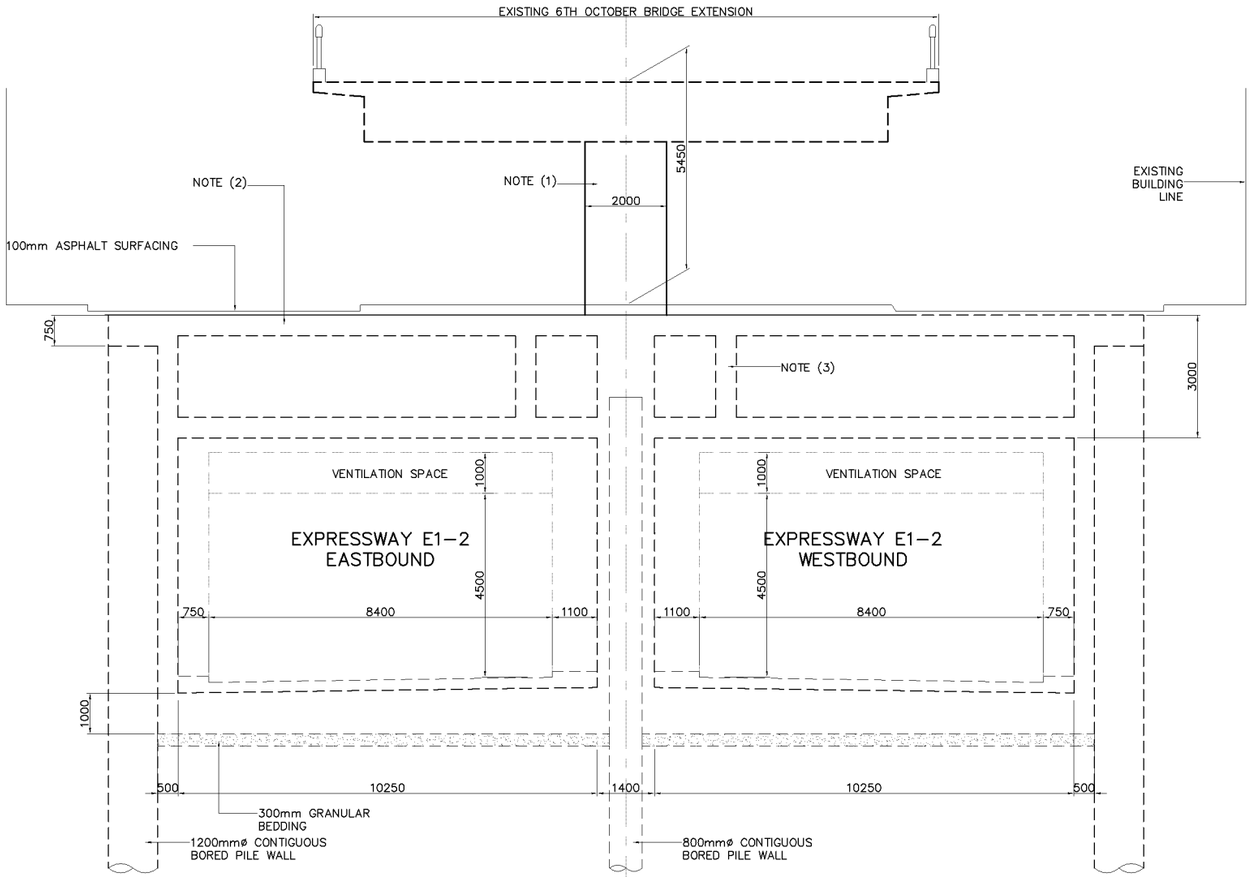

1 SCALE **TYPICAL PIER ELEVATION** 1:150

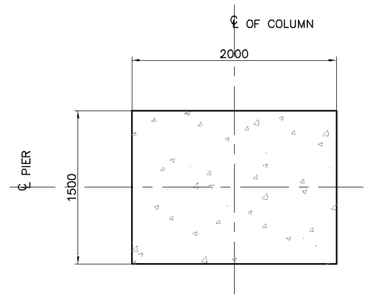

2 SCALE **COLUMN SECTION** 1:60

NOTES :

NOTE (1) : EXISTING BRIDGE PIER AND FOUNDATION TO BE DEMOLISHED AND PIER COLUMN RECONSTRUCTED MONOLITHIC WITH TUNNEL TOP SLAB STRUCTURE

NOTE (2) : VOIDED REINFORCED CONCRETE TOP SLAB (MONOLITHIC WITH RECONSTRUCTED BRIDGE PIER)

NOTE (3) : DIAPHRAGM AT LOCATION OF TEMPORARY DECK SUPPORTS

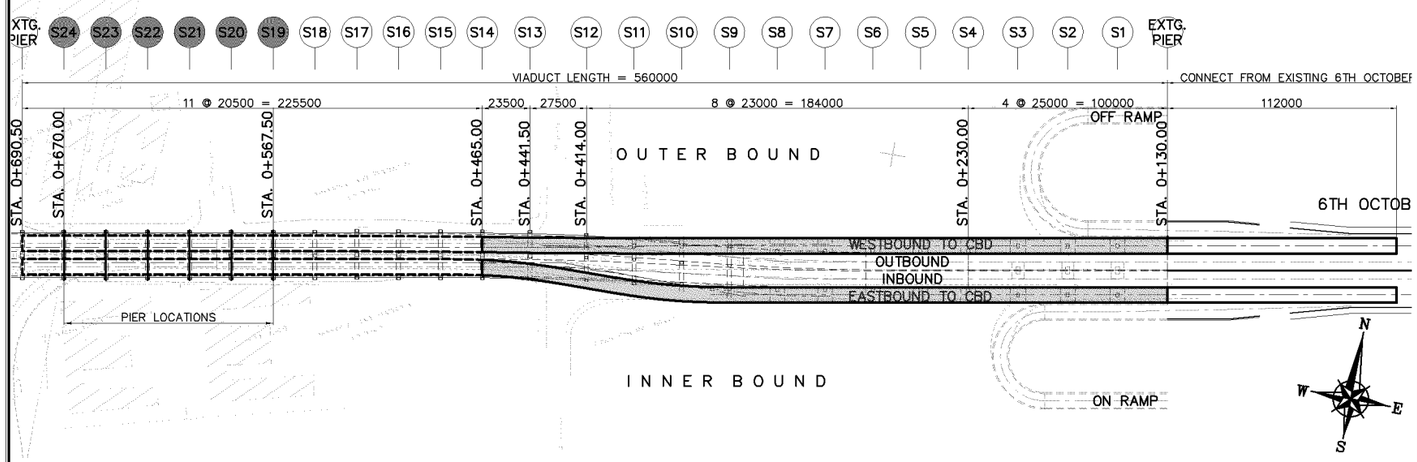

A SCALE **PLAN LAYOUT ON SIDE RAMP EASTBOUND & WESTBOUND** 1:3000

SUMMARY OF QUANTITIES - 6 PIERS (S19 - S24)

DESCRIPTION	UNIT	QUANTITIES		
		COLUMN	COPING	TOTAL
STRUCTURE WORKS				
STRUCTURAL CONCRETE Fcu=300 kg/cm2	CU.M.			
REINFORCING BARS	M.T.	27.00		27.00
STRUCTURAL CONCRETE Fcu=450 kg/cm2	CU.M.	108.00		108.00
PRESTRESSING STEEL – LONGITUDINAL	M.T.			
PRESTRESSING STEEL – TRANSVERSE	M.T.			

KATAHIRA & ENGINEERS INTERNATIONAL
PRICE WATERHOUSE COOPERS ADVISORY CO., LTD.

JAPAN INTERNATIONAL COOPERATION AGENCY

GENERAL AUTHORITY FOR ROADS BRIDGES AND LAND TRANSPORT (GARBLT)
MINISTRY OF TRANSPORT
ARAB REPUBLIC OF EGYPT

PROJECT AND LOCATION : FEASIBILITY STUDY ON HIGH PRIORITY URBAN TOLL EXPRESSWAYS IN CAIRO E1-2

SCALE : 1:150 1:60 1:3000 FULL SIZE A3

DRAWING TITLE : SIDE RAMPS PIER LAYOUT & SECTIONS (STA. 0+567.50 - STA. 0+670.00) (8 OF 8)

DRAWING NO : E1-2/S-15

SHEET NO : 15 / 48

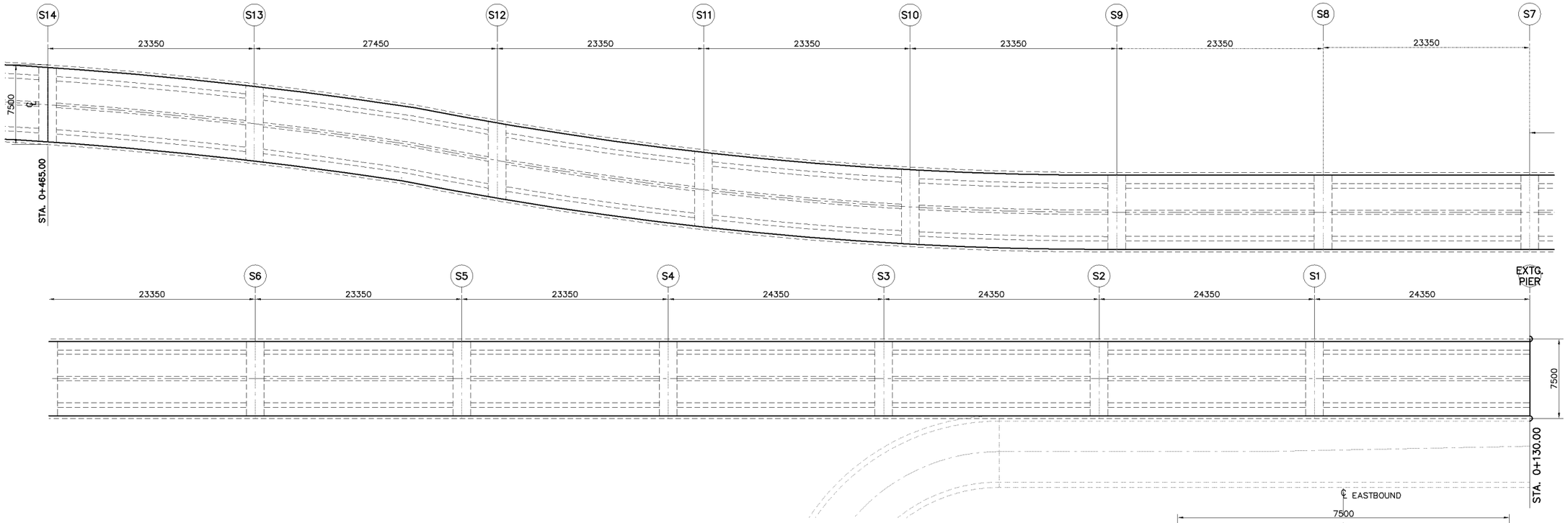

1 SCALE **PLAN** 1:500

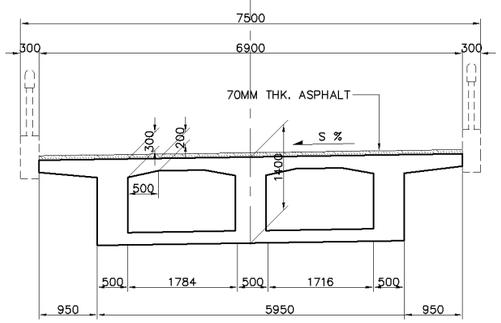

2 SCALE **TYPICAL SECTION** 1:100

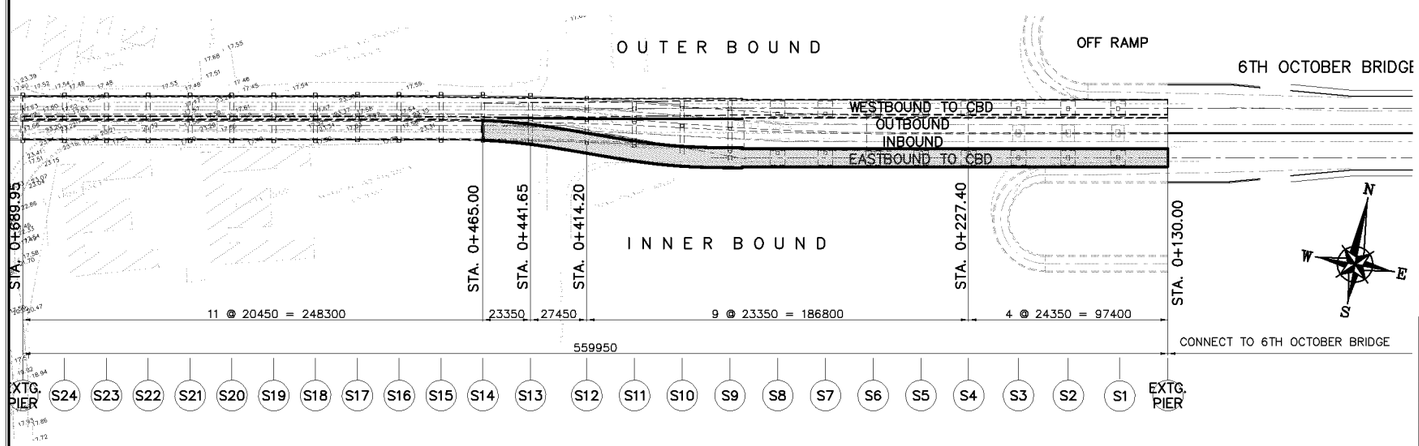

A SCALE **PLAN LAYOUT ON SIDE RAMP EASTBOUND** 1:3000

SUMMARY OF QUANTITIES - SUPERSTRUCTURE (LENGTH = 335.00 M.)

DESCRIPTION	UNIT	QUANTITIES		
			DECK	TOTAL
STRUCTURE WORKS				
STRUCTURAL CONCRETE Fcu=450 kg/cm2	CU.M.		1514.00	1514.00
REINFORCING BARS	M.T.		530.00	530.00
BRIDGE RAILING	M.		670.00	670.00
ASPHALT	CU.M.		162.00	162.00

KATAHIRA & ENGINEERS INTERNATIONAL PRICE WATERHOUSE COOPERS ADVISORY CO., LTD.	JICA JAPAN INTERNATIONAL COOPERATION AGENCY	GENERAL AUTHORITY FOR ROADS BRIDGES AND LAND TRANSPORT (GARBLT) MINISTRY OF TRANSPORT ARAB REPUBLIC OF EGYPT	PROJECT AND LOCATION : FEASIBILITY STUDY ON HIGH PRIORITY URBAN TOLL EXPRESSWAYS IN CAIRO E1-2	SCALE : 1:3000 1:500 1:100 FULL SIZE A3

DRAWING TITLE :	DRAWING NO :
EASTBOUND SIDE RAMPS SUPERSTRUCTURE LAYOUT & SECTIONS (STA. 0+130.00 - STA. 0+465.00) (1 OF 2)	E1-2/S-16
	SHEET NO : 16 / 48

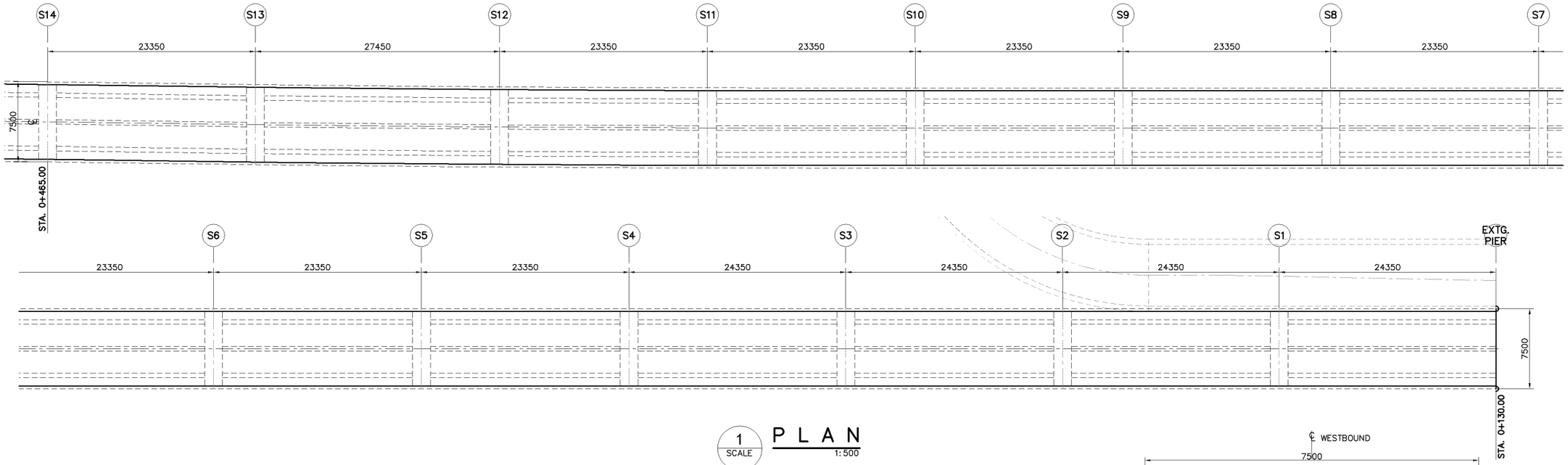

1 SCALE **PLAN** 1:500

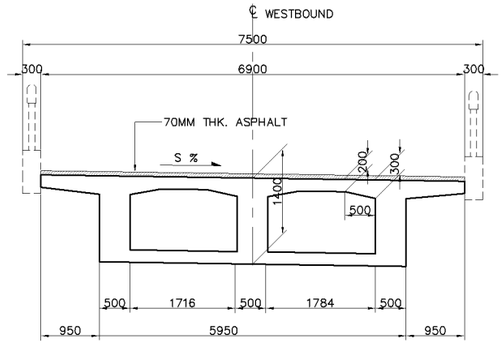

2 SCALE **TYPICAL SECTION** 1:100

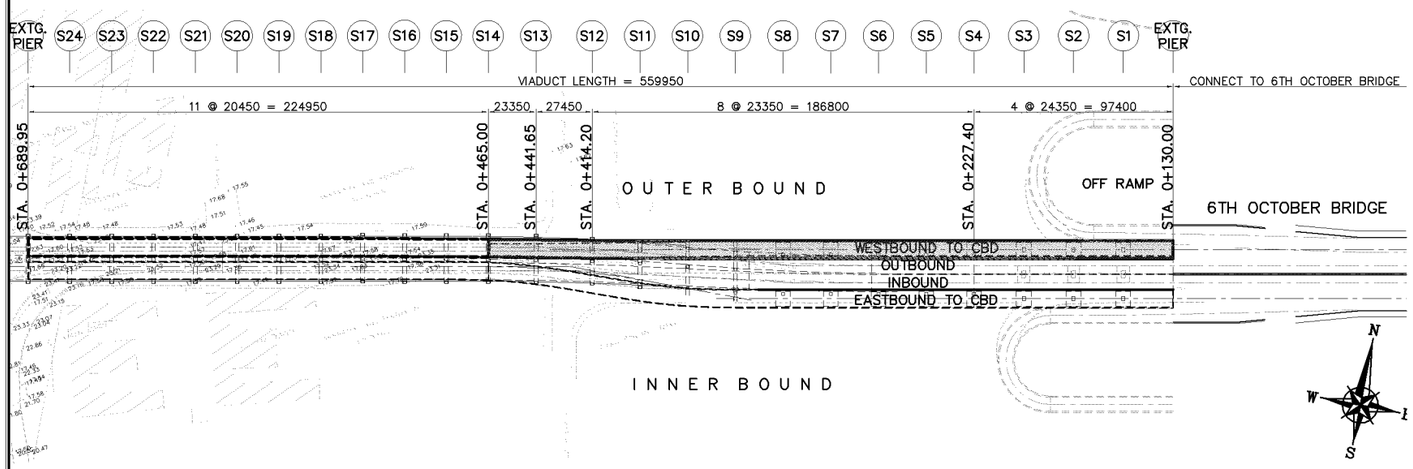

A SCALE **PLAN LAYOUT ON SIDE RAMP WESTBOUND** 1:3000

SUMMARY OF QUANTITIES - SUPERSTRUCTURE (LENGTH = 335.00 M.)

DESCRIPTION	UNIT	QUANTITIES		
			DECK	TOTAL
STRUCTURE WORKS				
STRUCTURAL CONCRETE Fcu=450 kg/cm2	CU.M.		1514.00	1514.00
REINFORCING BARS	M.T.		530.00	530.00
BRIDGE RAILING	M.		670.00	670.00
ASPHALT	CU.M.		162.00	162.00

KATAHIRA & ENGINEERS INTERNATIONAL PRICE WATERHOUSE COOPERS ADVISORY CO., LTD.	JICA JAPAN INTERNATIONAL COOPERATION AGENCY	GENERAL AUTHORITY FOR ROADS BRIDGES AND LAND TRANSPORT (GARBLT) MINISTRY OF TRANSPORT ARAB REPUBLIC OF EGYPT	PROJECT AND LOCATION : FEASIBILITY STUDY ON HIGH PRIORITY URBAN TOLL EXPRESSWAYS IN CAIRO E1-2	SCALE : 1:3000 1:500 1:100 FULL SIZE A3
DRAWING TITLE : WESTBOUND SIDE RAMPS SUPERSTRUCTURE LAYOUT & SECTIONS (STA. 0+130.00 - STA. 0+465.00) (2 OF 2)	DRAWING NO : E1-2/S-17	SHEET NO : 17 / 48		

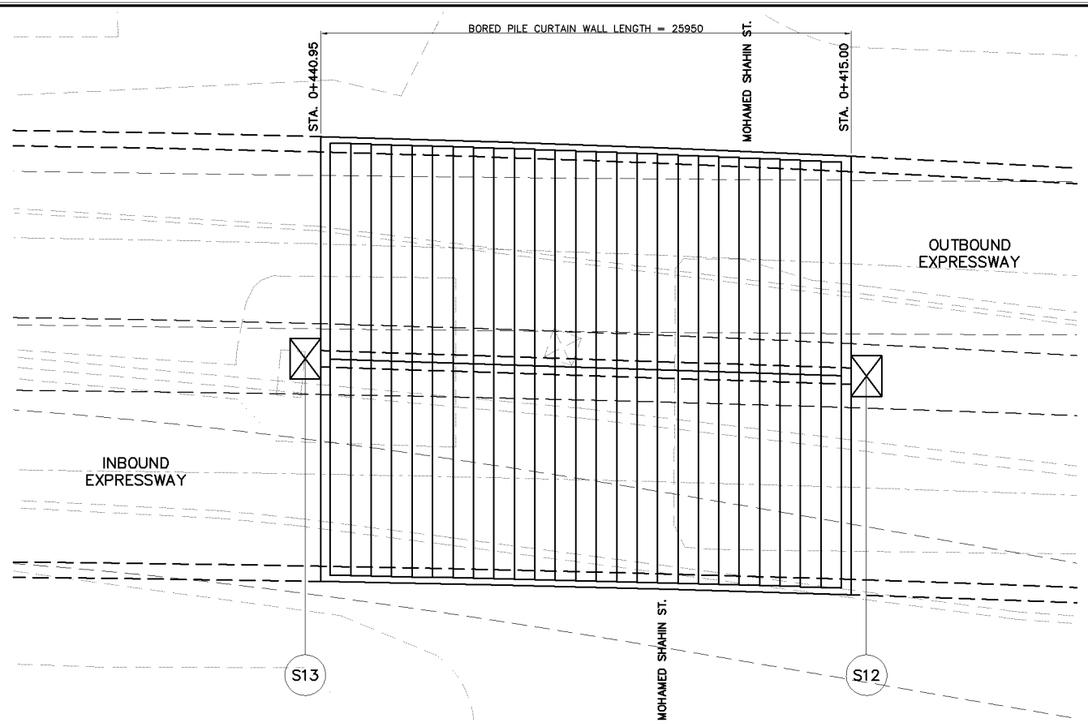

A SCALE 1:300 — CUT & COVER W/ PSC PLANKS LAYOUT PLAN

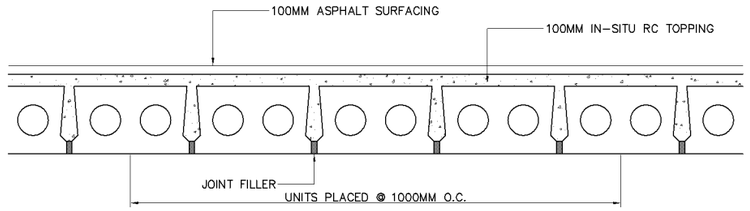

2 SCALE 1:50 — TYPICAL ARRANGEMENT PRE-TENSIONED CONCRETE PLANKS WITH RC TOPPING

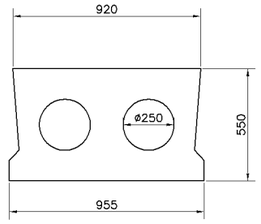

3 SCALE 1:30 — TYPICAL SECTION

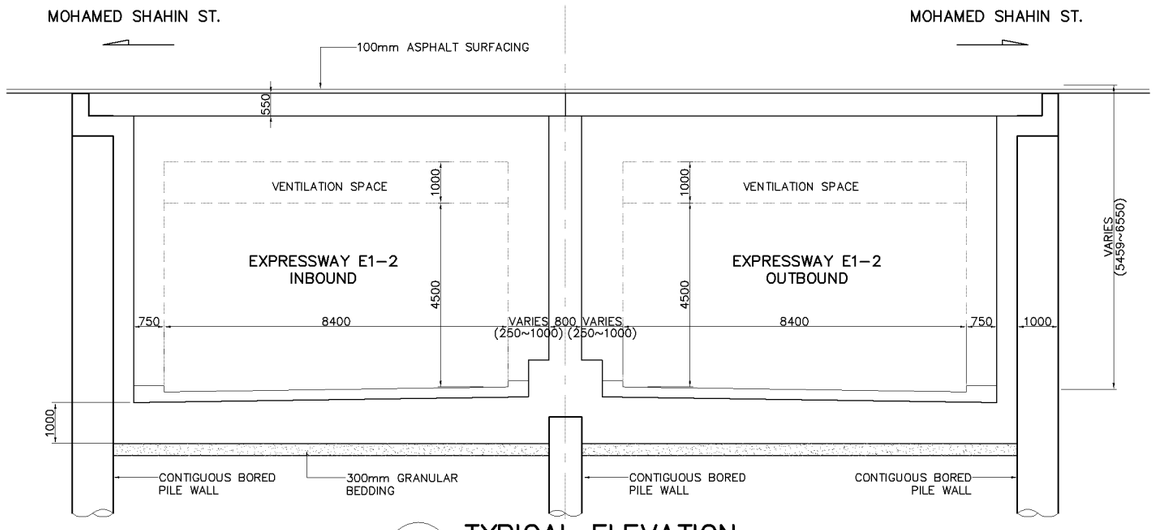

1 SCALE 1:150 — TYPICAL ELEVATION

SUMMARY OF QUANTITIES - CUT & COVER SECTION (PSC PLANKS) (LENGTH = 25.95M.)

DESCRIPTION	UNIT	QUANTITIES 1	2	TOTAL
EARTHWORKS				
STRUCTURE EXCAVATION	CU.M.	4838.00		4838.00
STRUCTURE BACKFILL	CU.M.			
GRANULAR BEDDING	CU.M.	180.00		180.00
STRUCTURE WORKS				
CAST IN PLACE BORED PILE (1000MM DIA.)	M.	520.00		520.00
PILE LOAD TEST – STATIC (1000MM DIA.)	NO.	5.00		5.00
CAST IN PLACE BORED PILE (800MM DIA.)	M.	640.00		640.00
PILE LOAD TEST – STATIC (800MM DIA.)	NO.	5.00		5.00
STRUCTURAL CONCRETE Fcu=300 kg/cm2	CU.M.	1379.00		1379.00
STRUCTURAL CONCRETE Fcu=450 kg/cm2	CU.M.	247.00		247.00
REINFORCING BARS	M.T.	313.00		313.00
PRESTRESSING STEEL – LONGITUDINAL	M.T.	7.00		7.00
ASPHALT SURFACING (100MM)	CU.M.	60.00		60.00
IN-SITU RC TOPPING (100MM)	CU.M.	60.00		60.00

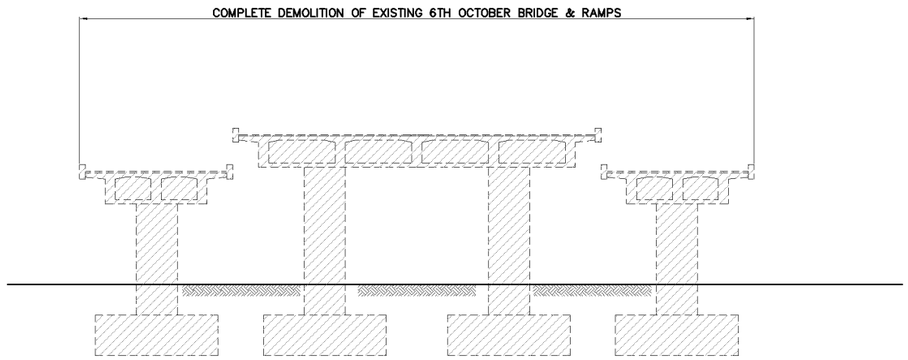

1 SCALE **SECTION** 1:200

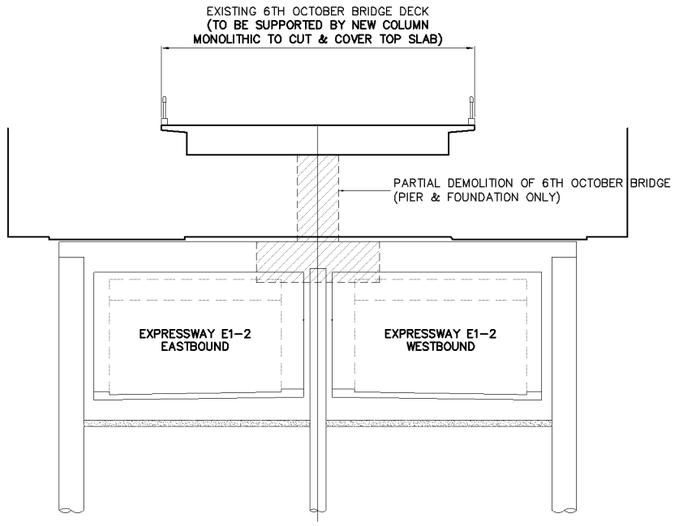

2 SCALE **SECTION** 1:300

INTEGRATION OF THE EXISTING 6TH OCTOBER BRIDGE WITH TUNNEL STRUCTURE

THE DECK OF THE EXISTING 6TH OCTOBER BRIDGE ABOVE THE CUT-AND-COVER TUNNEL SECTION OF THE EXPRESSWAY WILL REST ON TEMPORARY SUPPORTS DURING CONSTRUCTION. THIS WILL ALLOW THE EXISTING BRIDGE PIERS AND FOUNDATIONS TO BE DEMOLISHED TO ENABLE THE CUT-AND-COVER TUNNEL TO BE CONSTRUCTED. PIER SUPPORTS WILL THEN BE RECONSTRUCTED MONOLITHIC WITH THE TUNNEL STRUCTURE.

THE FOLLOWING CONSTRUCTION STEPS ARE ENVISAGED:

1. CLOSE THE ROAD TO TRAFFIC AND CONSTRUCT THE BORED PILE CURTAIN WALLS EACH SIDE.
2. EXCAVATE FOR THE TOP SLAB OF THE CUT-AND-COVER TUNNEL BETWEEN THE EXISTING BRIDGE FOUNDATIONS.
3. CONSTRUCT THE CENTRAL CONTIGUOUS BORED PILE SUPPORT WALL BETWEEN THE EXISTING BRIDGE FOUNDATIONS.
4. CONSTRUCT THE TOP SLAB OF THE CUT-AND-COVER TUNNEL BETWEEN THE EXISTING BRIDGE FOUNDATIONS.
5. WHEN THE TOP SLAB HAS GAINED SUFFICIENT STRENGTH, PLACE TEMPORARY COLUMN SUPPORTS ON THE SLABS AT LOCALLY REINFORCED POINTS (ADDITIONAL DIAPHRAGMS CONSTRUCTED AND TOP SLAB THICKENED AS NECESSARY) AND SPAN BETWEEN THESE POINTS WITH TEMPORARY STEEL STRINGERS ADJACENT AND PARALLEL WITH THE EXITSING BRIDGE PIERS.
6. JACK THE EXISTING DECK ONTO BEARING POINTS ON THE STRINGERS. THE JACKING FORCES ARE DETERMINED TO BE EQUIVALENT TO THE PIER REACTIONS, THEREBY EFFECTIVELY UNLOADING THE PIERS. THE DECK IS NOW TEMPORARILY SUPPORTED FROM THE TOP SLAB OF THE TUNNEL THROUGH THE TEMPORARY SUPPORTS.
7. DEMOLISH THE EXISTING BRIDGE PIERS AND FOUNDATIONS AND EXCAVATE FOR THE REMAINING TOP SLAB OF THE CUT-AND-COVER TUNNEL.
8. CONSTRUCT THE REMAINING CENTRAL BORED PILE WALL AND TOP SLAB OF THE CUT-AND-COVER TUNNEL AT THE LOCATION OF THE NOW DEMOLISHED BRIDGE FOUNDATIONS. THE NEW TOP SLAB WILL BE DESIGNED TO CARRY ALL LOADS FROM THE BRIDGE PIERS AND WILL HAVE ALL NECESARY REINFORCEMENT INCLUDING STARTER BARS FOR THE NEW BRIDGE PIERS.
9. CONSTRUCT THE NEW BRIDGE PIERS TO BE MONOLITHIC WITH THE NEW TOP SLAB OF THE TUNNEL AND CEMENT GROUT THE PIER COLUMN/DECK JOINTS.
10. RELEASE AND REMOVE THE TEMPORARY SUPPORTS. THE DECK IS NOW PERMANENTLY SUPPORTED ON THE NEW BRIDGE PIERS FROM THE TOP SLAB OF THE TUNNEL.
11. FILL ABOVE THE TUNNEL SLAB, REINSTATE THE PAVEMENT WORKS AND REOPEN THE ROAD TO TRAFFIC.
12. EXCAVATE THE MAIN TUNNEL SPACE AND CONTRUCT THE TUNNEL WALL LININGS AND BASE SLABS TO COMPLETE THE CUT-AND-COVER TUNNEL CIVIL WORKS. THIS CAN BE DONE AT THE SAME TIME AS STEPS 9, 10 AND 11 ABOVE.

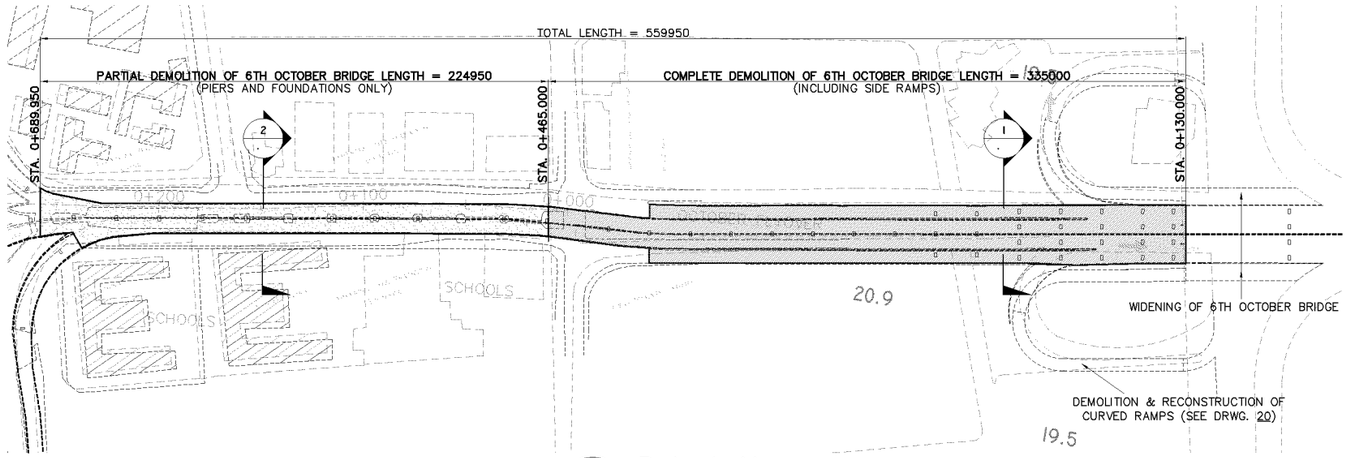

A SCALE **PLAN** 1:3000

SUMMARY OF QUANTITIES

DESCRIPTION	UNIT	QUANTITIES			
		PIER & FOUNDATION	DECK	RAMPS	TOTAL
COMPLETE DEMOLITION					
COLUMNS	NO.	23		16	39
PILE CAPS	NO.	23		16	39
BORED PILES	NO.				
CELLULAR DECK	L.M.		335	300	635
EMBANKMENT	L.M.			280	280
PARTIAL DEMOLITION					
COLUMNS	NO.	11			11
PILE CAPS	NO.	11			11
BORED PILES	NO.				
TEMPORARILY SUPPORTED CELLULAR DECK	L.M.		225		225

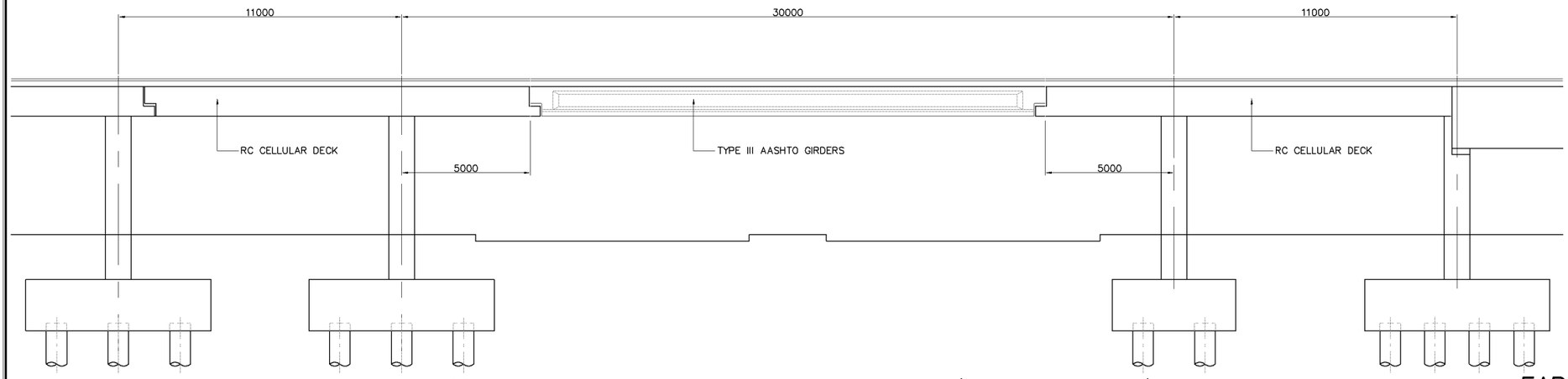

1 SCALE — ELEVATION ON 6TH OCTOBER BRIDGE (WIDENING PART) 1:200

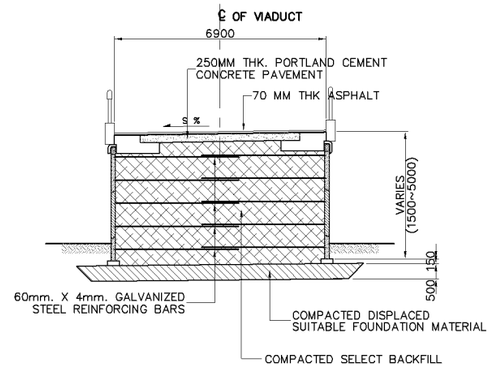

6 SCALE — TYPICAL SECTION 1:200

MECHANICALLY STABILIZED EARTH WALL (MSE) – APPROACH RAMP

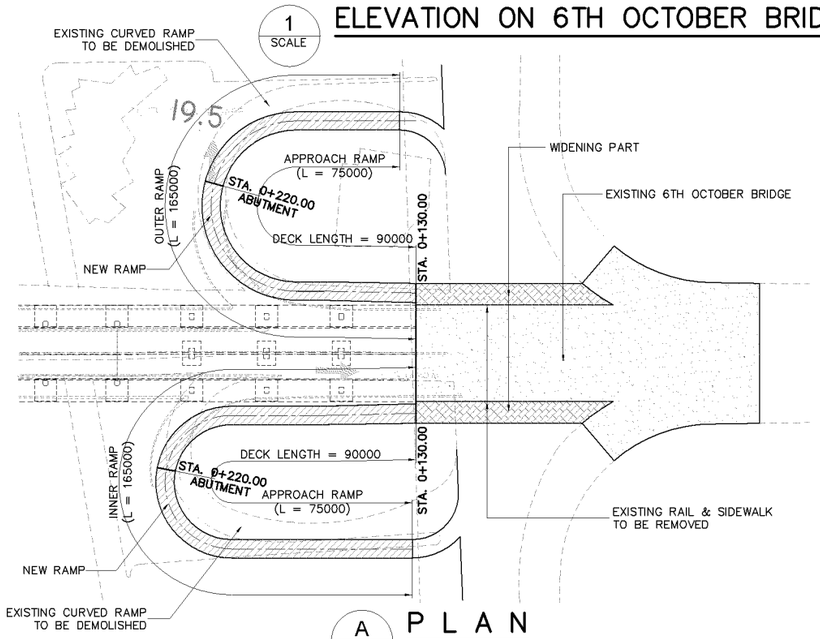

A SCALE — P L A N 1:2000

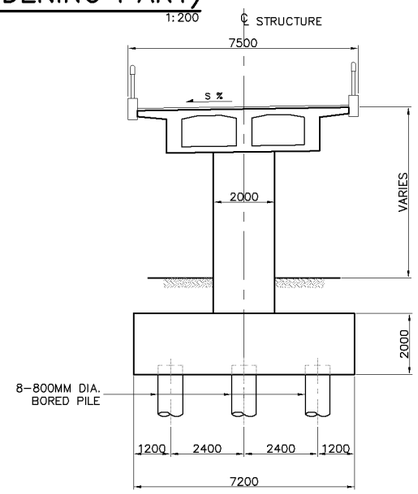

2 SCALE — TYPICAL PIER SECTION (RAMP) 1:200

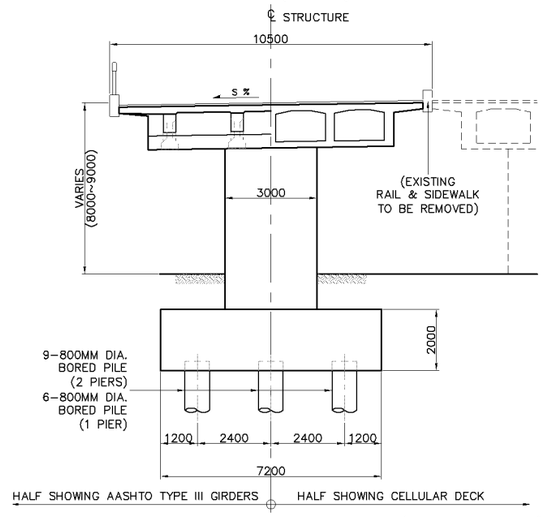

4 SCALE — TYPICAL PIER SECTION (WIDENING) 1:200

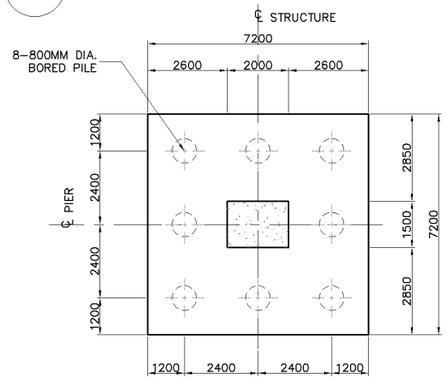

3 SCALE — PLAN ON PILE CAP (RAMP) 1:200

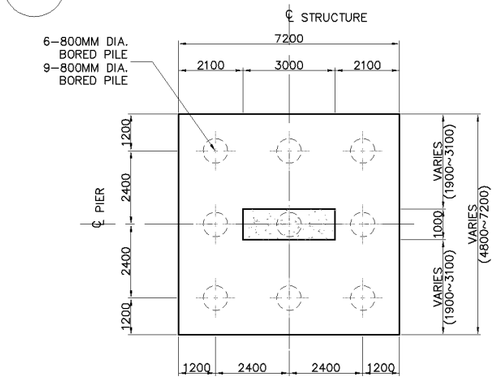

5 SCALE — PLAN ON PILE CAP (WIDENING) 1:200

SUMMARY OF QUANTITIES

DESCRIPTION	UNIT	QUANTITIES				
		MSE WALL	ABUTMENT	PIER	DECK	TOTAL
EARTH WORKS						
STRUCTURE EXCAVATION	CU.M.	1275	390	3345		5010
FOUNDATION FILL	CU.M.	300	220	1855		2375
STRUCTURE BACKFILL	CU.M.	3375				3375
MECHANICALLY STABILIZED EARTHWALL	SQ.M.	900				900
STRUCTURE WORKS						
CAST IN PLACE BORED PILE (800MM DIA.)	L.M.		240	2160		2400
AASHTO GIRDERS TYPE III	NO.				8	8
STRUCTURAL CONCRETE Fcu=450 kg/cm2	CU.M.			330	1690	2020
STRUCTURAL CONCRETE Fcu=300 kg/cm2	CU.M.		270	1490		1760
REINFORCING STEEL	M.T.		55	400	650	1105
EXPANSION JOINT	M.				114	114
BEARING	NO.				36	36
DECK WATER PROOFING	SQ.M.				2450	2450
BRIDGE RAILING	L.M.	300			464	764

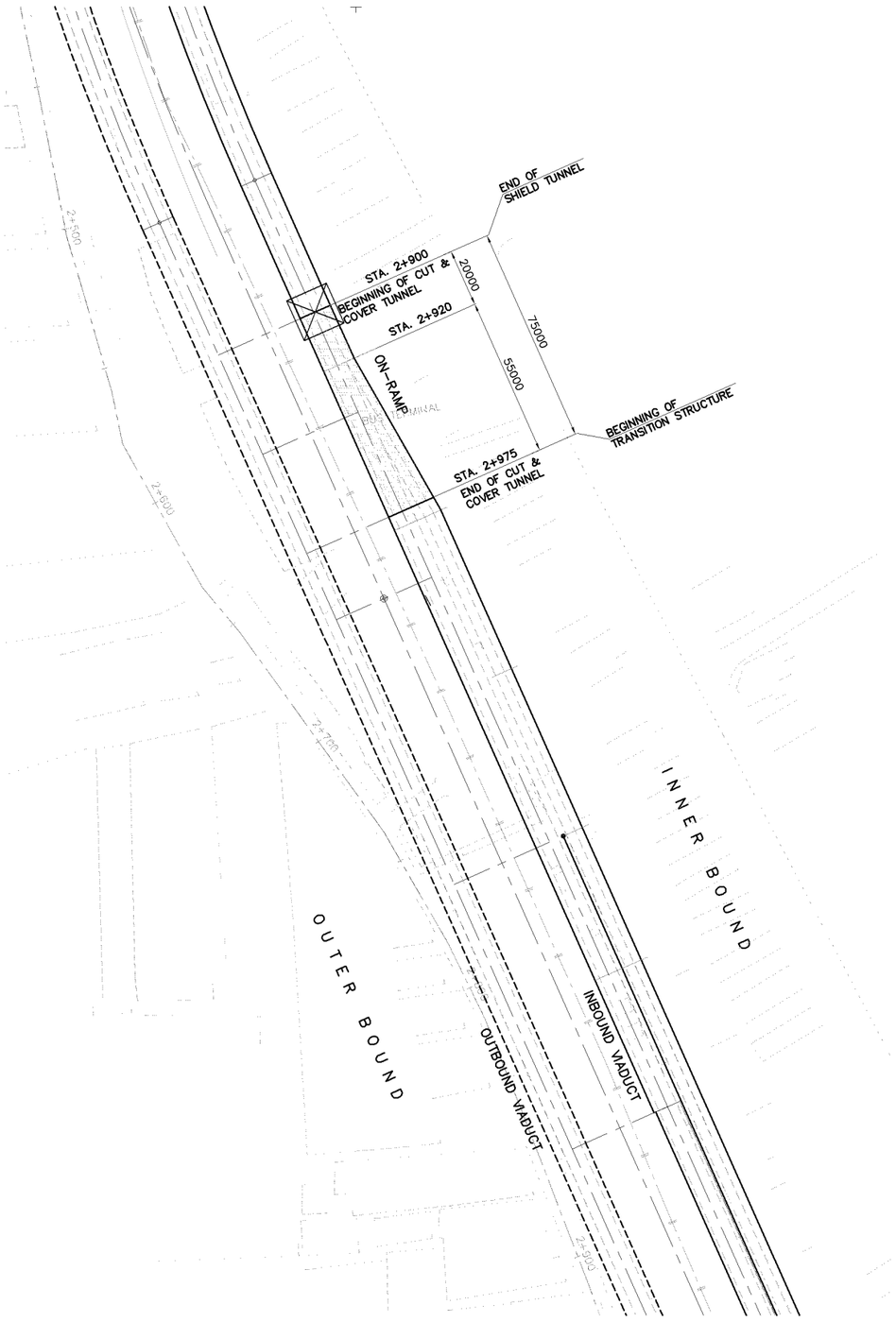

A SCALE

PLAN (INBOUND SIDE) STA.2+900.000 – STA.2+975.000

SCALE : 1:2000

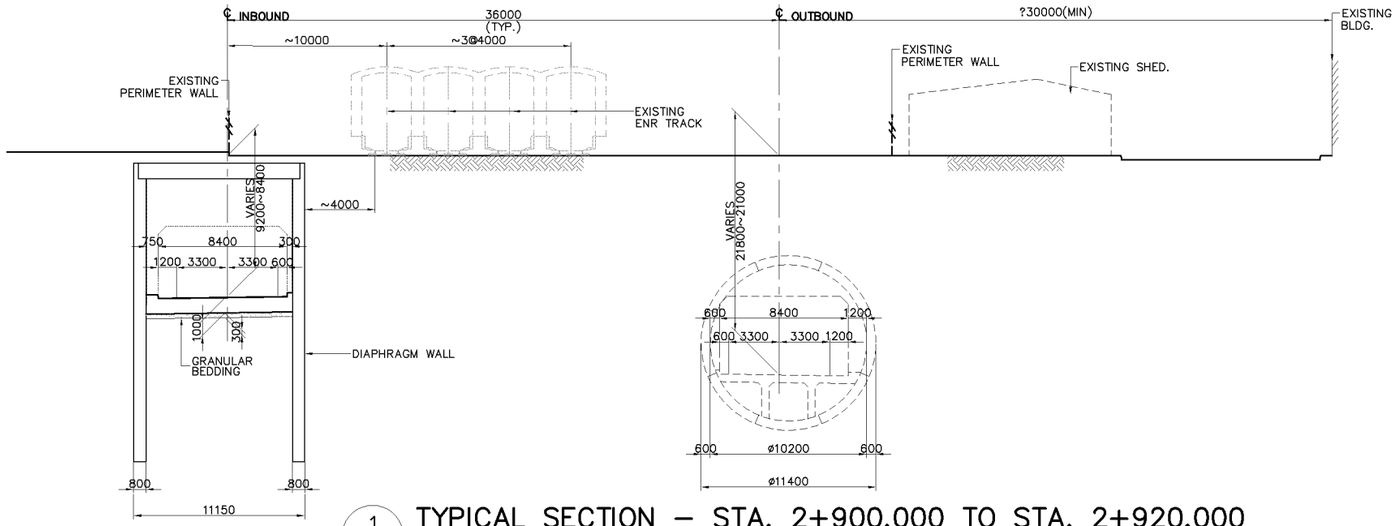

1 SCALE

TYPICAL SECTION – STA. 2+900.000 TO STA. 2+920.000

1:400

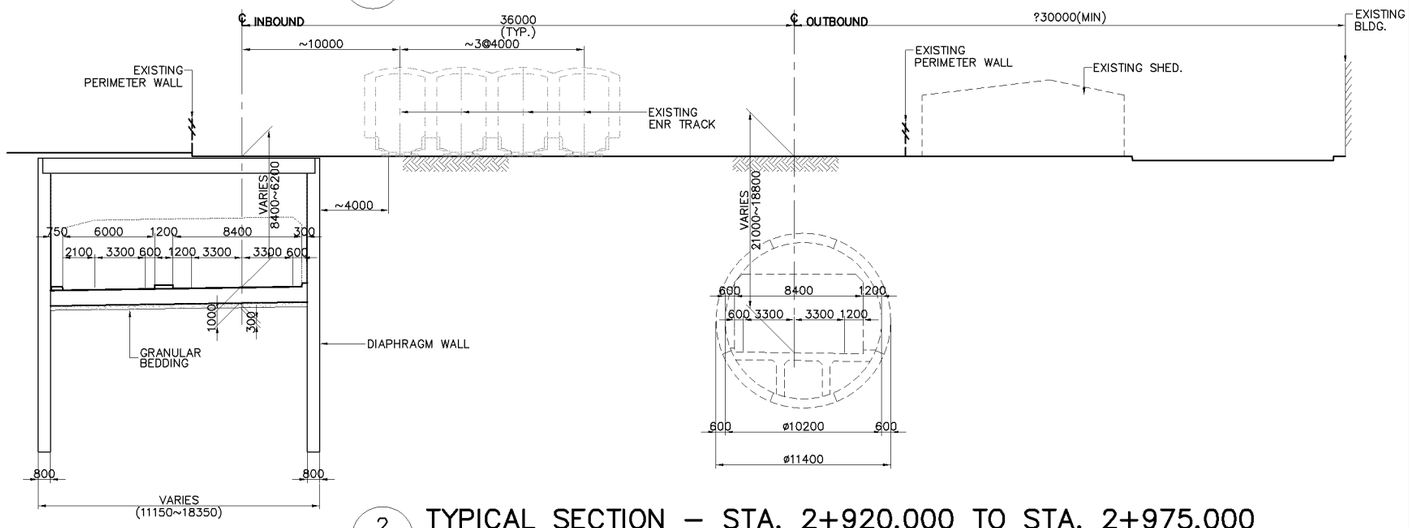

2 SCALE

TYPICAL SECTION – STA. 2+920.000 TO STA. 2+975.000

1:400

SUMMARY OF QUANTITIES (LENGTH = 75.00 M.)

DESCRIPTION	UNIT	QUANTITIES		
		1	2	TOTAL
EARTH WORKS				
STRUCTURE EXCAVATION	CU.M.	2107	8811	10918
ROCK EXCAVATION	CU.M.	234	979	1213
GRANULAR BEDDING	CU.M.	67	303	370
STRUCTURE WORKS				
DIAPHRAGM WALL	CU.M.	621	1566	2187
STRUCTURAL CONCRETE Fcu=300 kg/cm2	CU.M.	446	2018	2464
LEVELING CONCRETE	CU.M.	22	101	123
REINFORCING STEEL	M.T.	89	404	493

KATAHIRA & ENGINEERS INTERNATIONAL
PRICE WATERHOUSE COOPERS ADVISORY CO., LTD.

JICA
JAPAN INTERNATIONAL COOPERATION AGENCY

GENERAL AUTHORITY FOR ROADS BRIDGES AND LAND TRANSPORT (GARBLT)
MINISTRY OF TRANSPORT
ARAB REPUBLIC OF EGYPT

PROJECT AND LOCATION :	SCALE :	DRAWING TITLE :	DRAWING NO :
FEASIBILITY STUDY ON HIGH PRIORITY URBAN TOLL EXPRESSWAYS IN CAIRO E1-2	1:2000 1:400 FULL SIZE A3	CUT AND COVER TUNNEL INBOUND SECTION (STA. 2+900.00 - STA. 2+975.00)	E1-2/S-21
			SHEET NO : 21 / 48

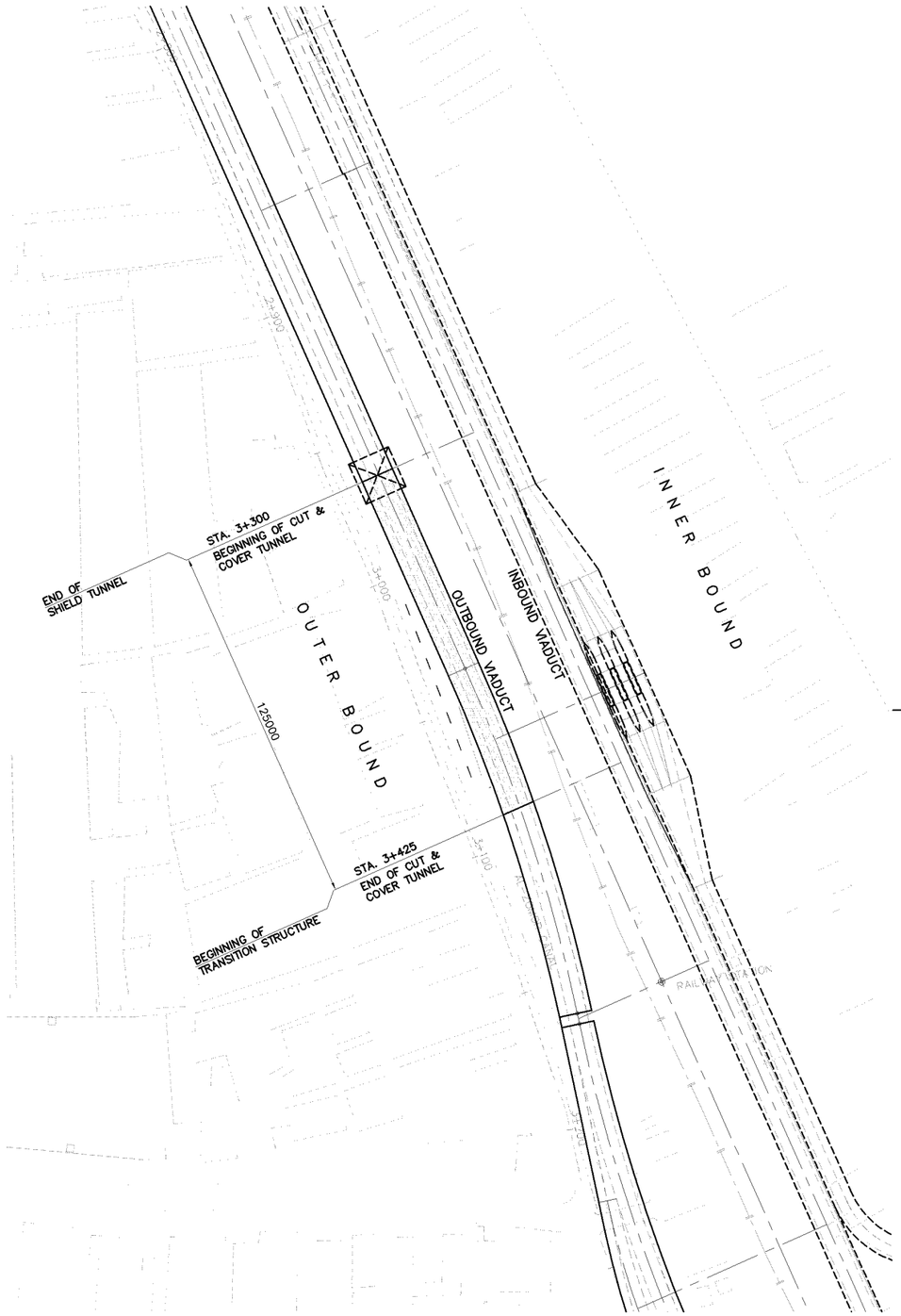

A SCALE — PLAN (OUTBOUND SIDE) STA.3+300.000 – STA.3+425.000

SCALE : 1:2000

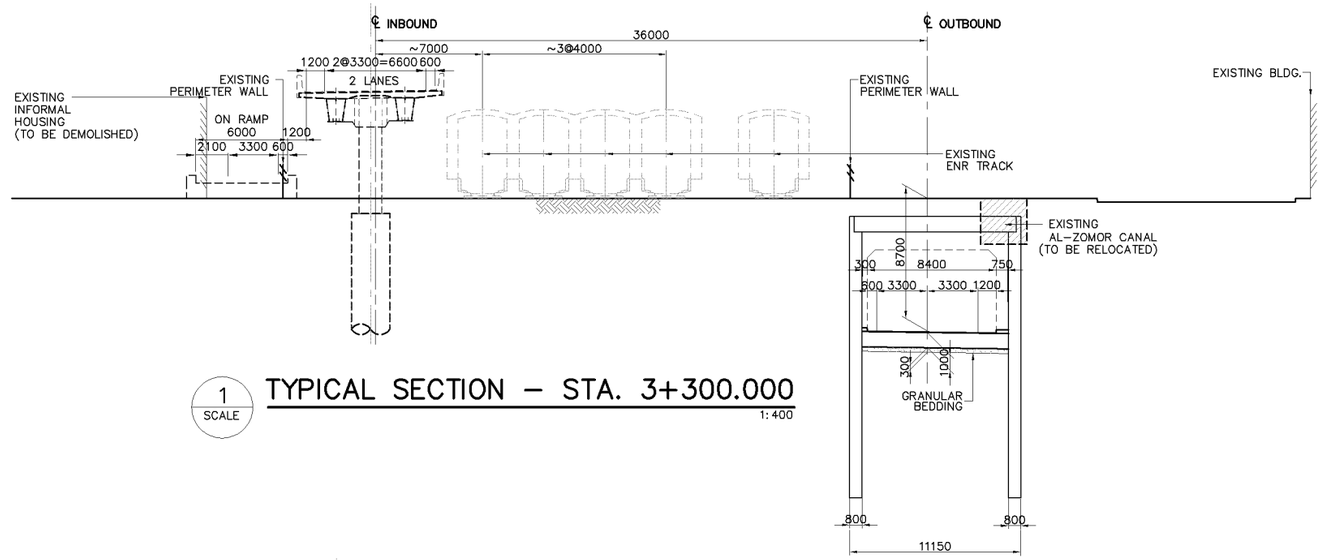

1 SCALE — TYPICAL SECTION – STA. 3+300.000

1:400

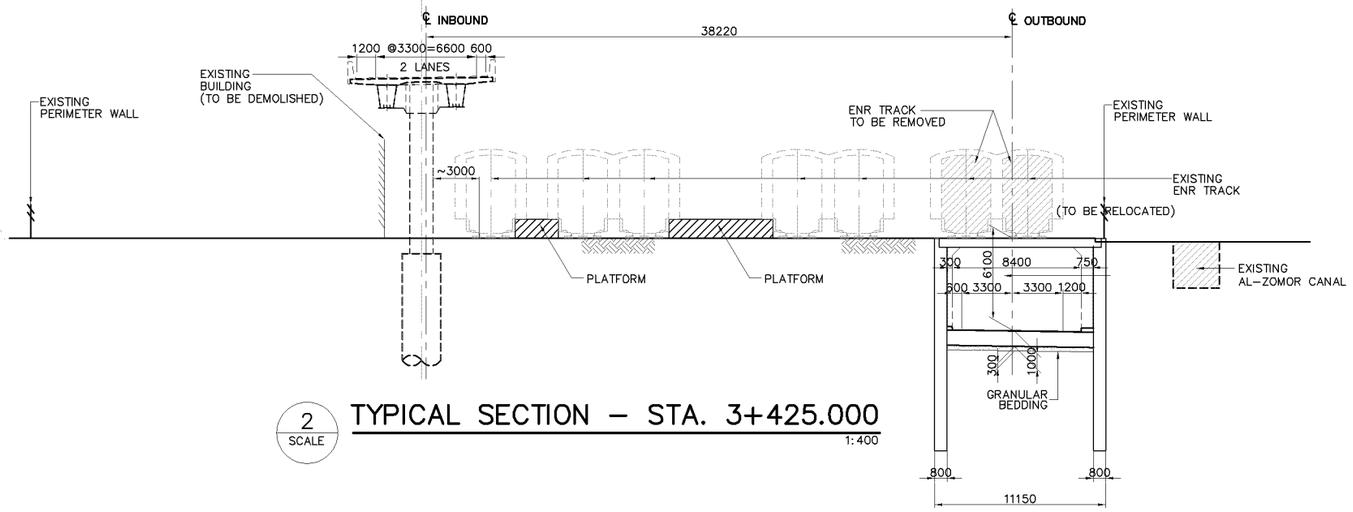

2 SCALE — TYPICAL SECTION – STA. 3+425.000

1:400

SUMMARY OF QUANTITIES (LENGTH = 125.00 M.)

DESCRIPTION	UNIT	QUANTITIES *	*	TOTAL
EARTH WORKS				
STRUCTURE EXCAVATION	CU.M.	*	*	12544
ROCK EXCAVATION	CU.M.			1394
GRANULAR BEDDING	CU.M.			418
STRUCTURE WORKS				
DIAPHRAGM WALL	CU.M.			3680
STRUCTURAL CONCRETE Fcu=300 kg/cm2	CU.M.			2788
LEVELING CONCRETE	CU.M.			139
REINFORCING STEEL	M.T.			558

KATAHIRA & ENGINEERS INTERNATIONAL PRICE WATERHOUSE COOPERS ADVISORY CO., LTD.	JICA JAPAN INTERNATIONAL COOPERATION AGENCY	GENERAL AUTHORITY FOR ROADS BRIDGES AND LAND TRANSPORT (GARBLT) MINISTRY OF TRANSPORT ARAB REPUBLIC OF EGYPT	PROJECT AND LOCATION : FEASIBILITY STUDY ON HIGH PRIORITY URBAN TOLL EXPRESSWAYS IN CAIRO E1-2	SCALE : 1:2000 1:400 FULL SIZE A3
DRAWING TITLE : CUT AND COVER TUNNEL OUTBOUND SECTION (STA. 3+300.00 - STA. 3+425.00)	DRAWING NO : E1-2/S-22	SHEET NO : 22 / 48		

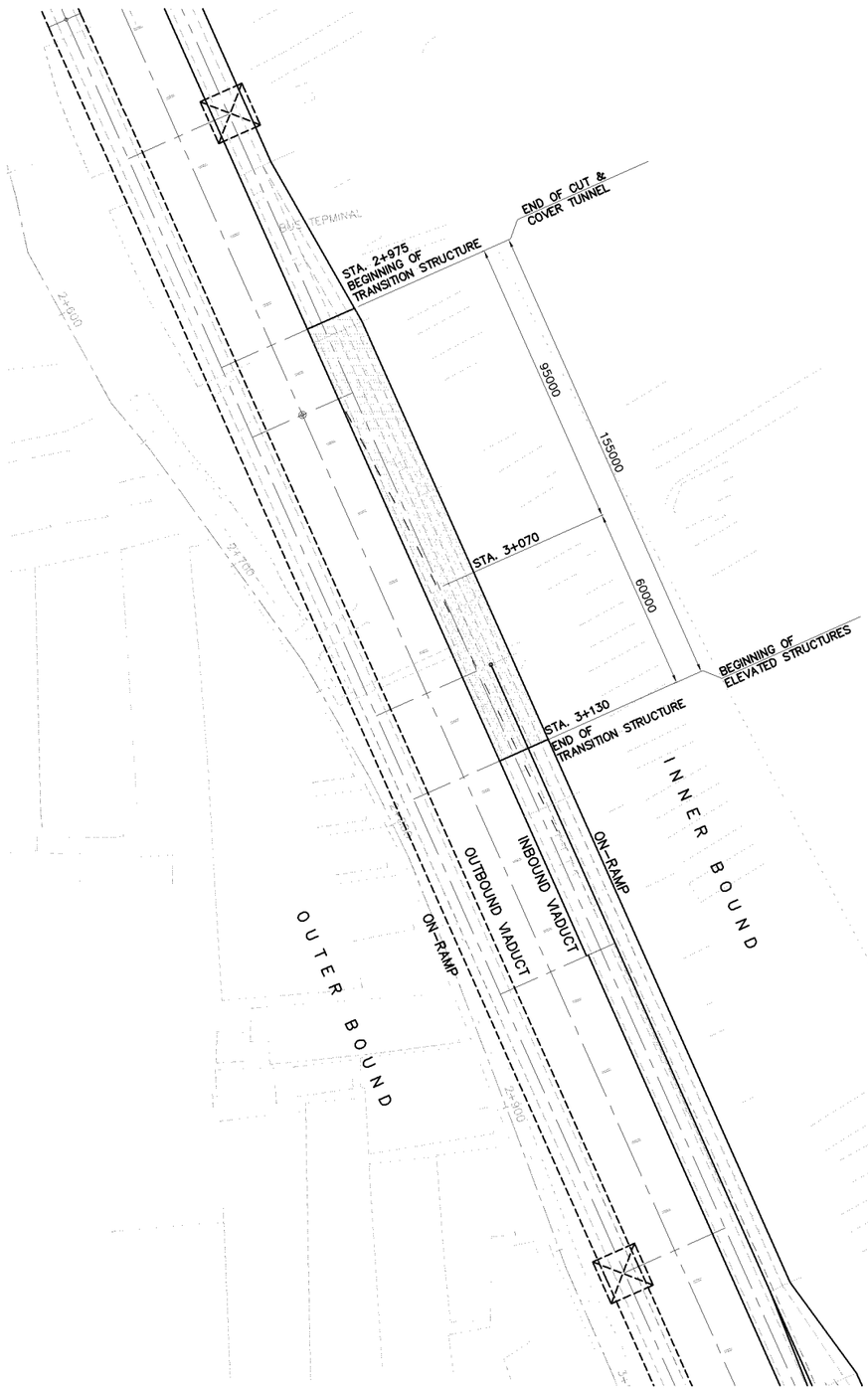

A SCALE — PLAN (INBOUND SIDE) STA.2+975.000 – STA.3+130.000

SCALE : 1:2000

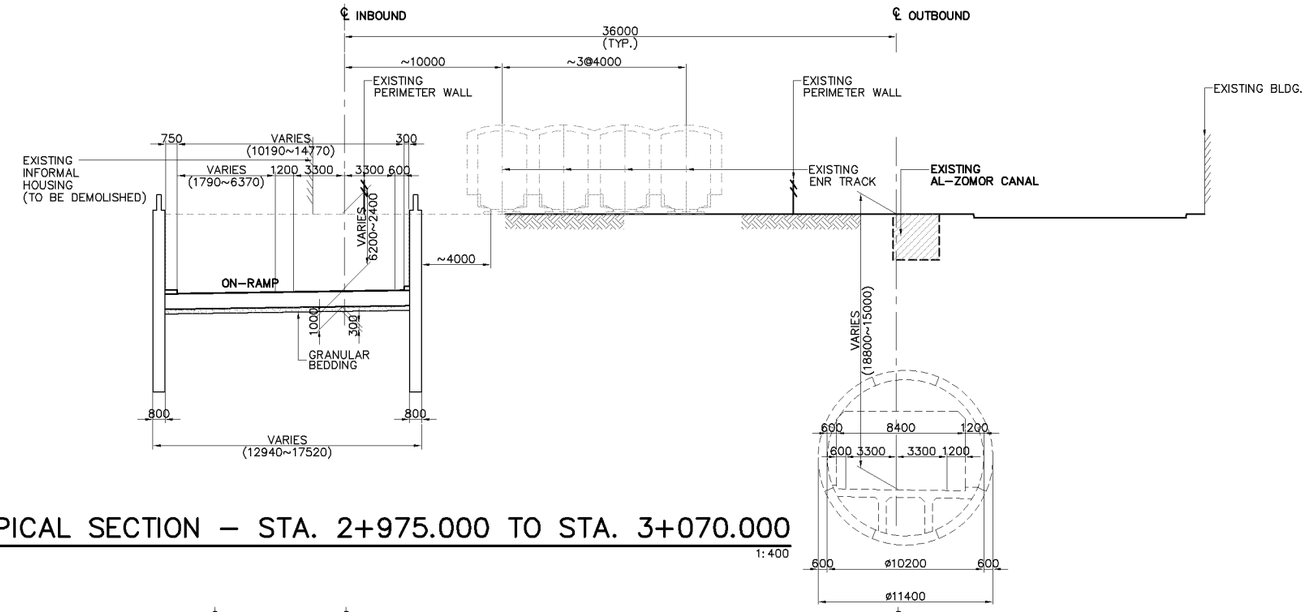

1 SCALE — TYPICAL SECTION – STA. 2+975.000 TO STA. 3+070.000

1:400

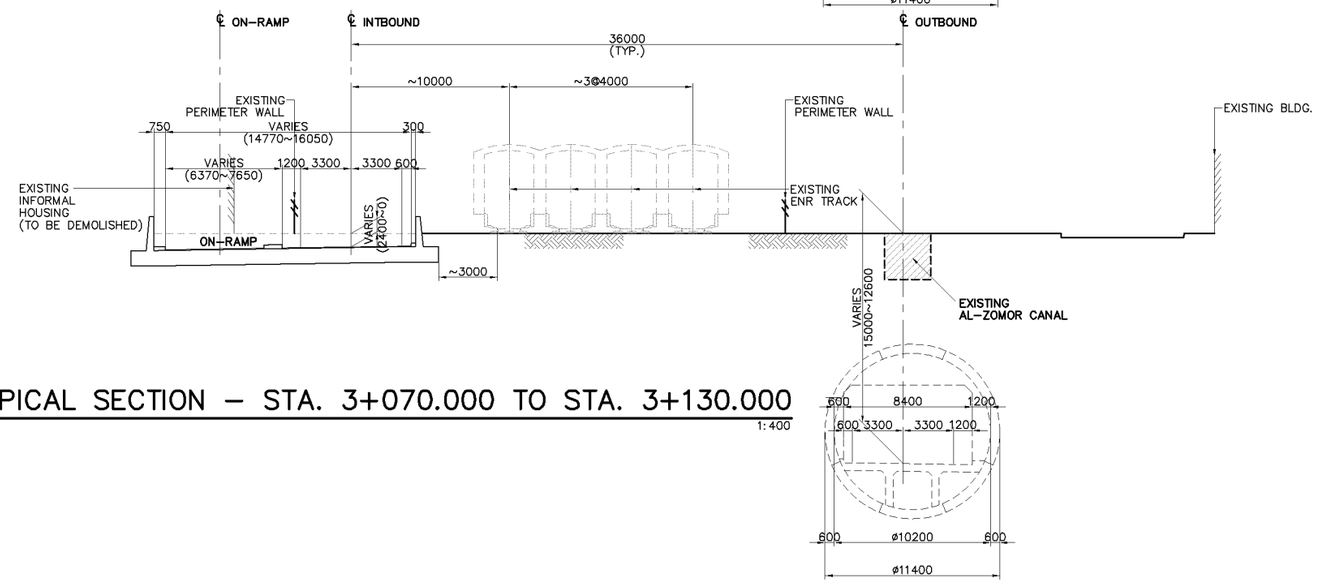

2 SCALE — TYPICAL SECTION – STA. 3+070.000 TO STA. 3+130.000

1:400

SUMMARY OF QUANTITIES (LENGTH = 155.00 M.)

DESCRIPTION	UNIT	QUANTITIES		
		OPEN CUT	STUB WALL	TOTAL
EARTH WORKS				
STRUCTURE EXCAVATION	CU.M.	11235	3672	14907
ROCK EXCAVATION	CU.M.	1248	408	1656
GRANULAR BEDDING	CU.M.	499	360	859
STRUCTURE WORKS				
DIAPHRAGM WALL / STUB WALL	CU.M.	2037	84	2121
STRUCTURAL CONCRETE Fcu=300 kg/cm2	CU.M.	1664	1200	2864
LEVELING CONCRETE	CU.M.	166	120	286
REINFORCING STEEL	M.T.	333	257	590

KATAHIRA & ENGINEERS INTERNATIONAL
PRICE WATERHOUSE COOPERS ADVISORY CO., LTD.

JICA
JAPAN INTERNATIONAL COOPERATION AGENCY

GENERAL AUTHORITY FOR ROADS BRIDGES AND LAND TRANSPORT (GARBLT)
MINISTRY OF TRANSPORT
ARAB REPUBLIC OF EGYPT

PROJECT AND LOCATION :	SCALE :	DRAWING TITLE :	DRAWING NO :
FEASIBILITY STUDY ON HIGH PRIORITY URBAN TOLL EXPRESSWAYS IN CAIRO E1-2	1:2000 1:400 FULL SIZE A3	TRANSITION STRUCTURE INBOUND SECTION (STA. 2+975.000 - STA. 3+130.000)	E1-2/S-23
			SHEET NO : 23 / 48

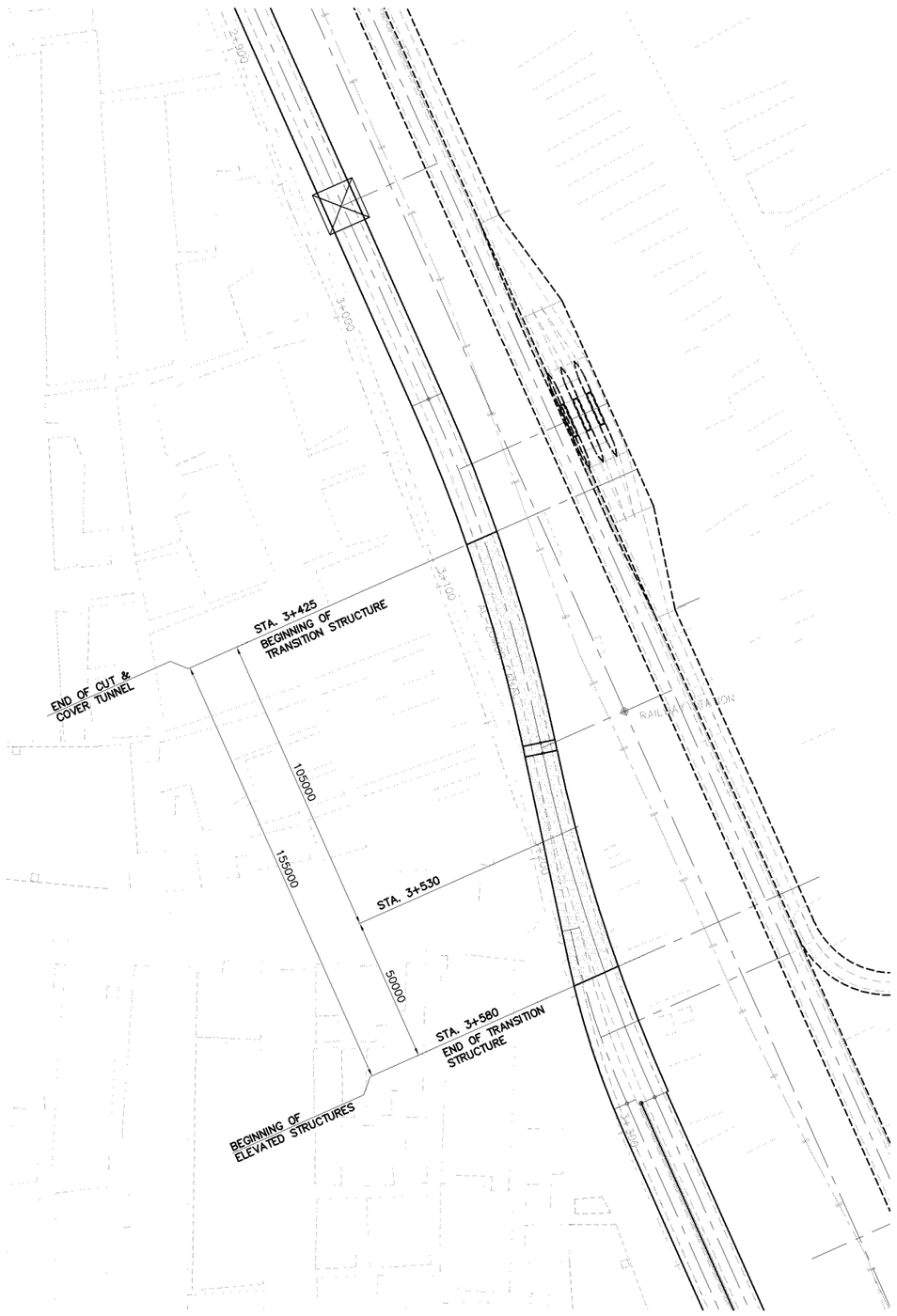

A SCALE **PLAN (OUTBOUND SIDE) STA.3+425.000 – STA.3+580.000**

SCALE : 1:2000

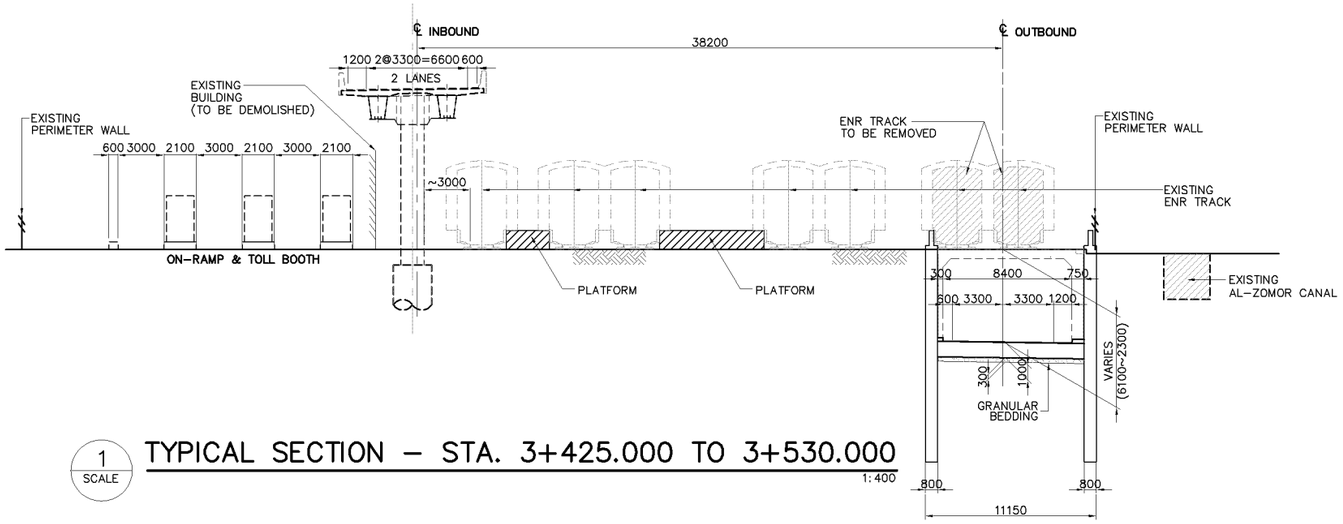

1 SCALE **TYPICAL SECTION – STA. 3+425.000 TO 3+530.000**

1:400

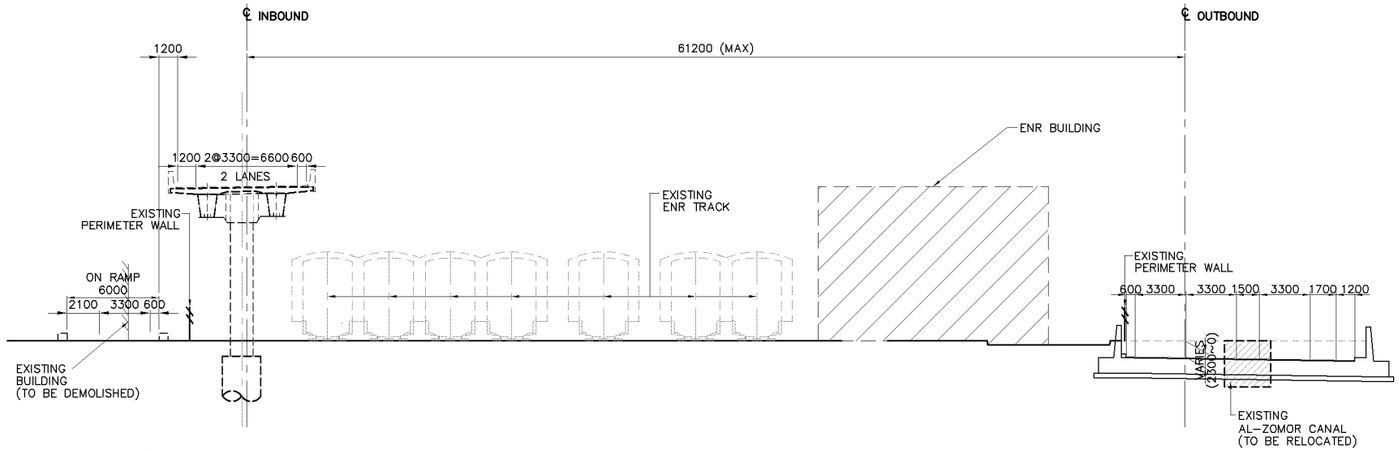

2 SCALE **TYPICAL SECTION – STA. 3+530.000 TO STA. 3+580.000**

1:400

SUMMARY OF QUANTITIES (LENGTH = 155.00)

DESCRIPTION	UNIT	QUANTITIES		
		OPEN CUT	STUB WALL	TOTAL
EARTH WORKS				
STRUCTURE EXCAVATION	CU.M.	7903	2896	10799
ROCK EXCAVATION	CU.M.	878	322	1200
GRANULAR BEDDING	CU.M.	351	293	644
STRUCTURE WORKS				
DIAPHRAGM WALL / STUB WALL	CU.M.	2218	140	2358
STRUCTURAL CONCRETE Fcu=300 kg/cm2	CU.M.	1171	975	2146
LEVELING CONCRETE	CU.M.	117	98	215
REINFORCING STEEL	M.T.	678	223	901

KATAHIRA & ENGINEERS INTERNATIONAL PRICE WATERHOUSE COOPERS ADVISORY CO., LTD.	JICA JAPAN INTERNATIONAL COOPERATION AGENCY	GENERAL AUTHORITY FOR ROADS BRIDGES AND LAND TRANSPORT (GARBLT) MINISTRY OF TRANSPORT ARAB REPUBLIC OF EGYPT	PROJECT AND LOCATION : FEASIBILITY STUDY ON HIGH PRIORITY URBAN TOLL EXPRESSWAYS IN CAIRO E1-2	SCALE : 1:2000 1:400 FULL SIZE A3

DRAWING TITLE :	DRAWING NO :
TRANSITION STRUCTURE OUTBOUND SECTION (STA. 3+425.000 - STA. 3+580.000)	E1-2/S-24
	SHEET NO : 24 / 48

SUMMARY OF QUANTITIES - APPROACH EMBANKMENT (LENGTH=95.00M.)
ON-RAMP EMBANKMENT (LENGTH=470.00M.)

DESCRIPTION	UNIT	QUANTITIES			
		STUB WALL	MSE WALL	ON-RAMP	TOTAL
EARTH WORKS					
STRUCTURE EXCAVATION	CU.M.	102	972	4444	5518
FOUNDATION FILL	CU.M.	153	405	7555	8113
STRUCTURE BACKFILL	CU.M.				
SELECTED BACKFILL FOR MSE WALL	CU.M.		3644		3644
MECHANICALLY STABILIZED EARTHWALL	SQ.M.		759		759
STRUCTURE WORKS					
STRUCTURAL CONCRETE Fcu=300 kg/cm2	CU.M.	30	121	1410	1561
PCCP	CU.M.		177		177
ASPHALT	CU.M.	7	50	272	328
REINFORCING STEEL	T.	4	18	212	234
BASE COURSE	CU.M.	45		1940	1985

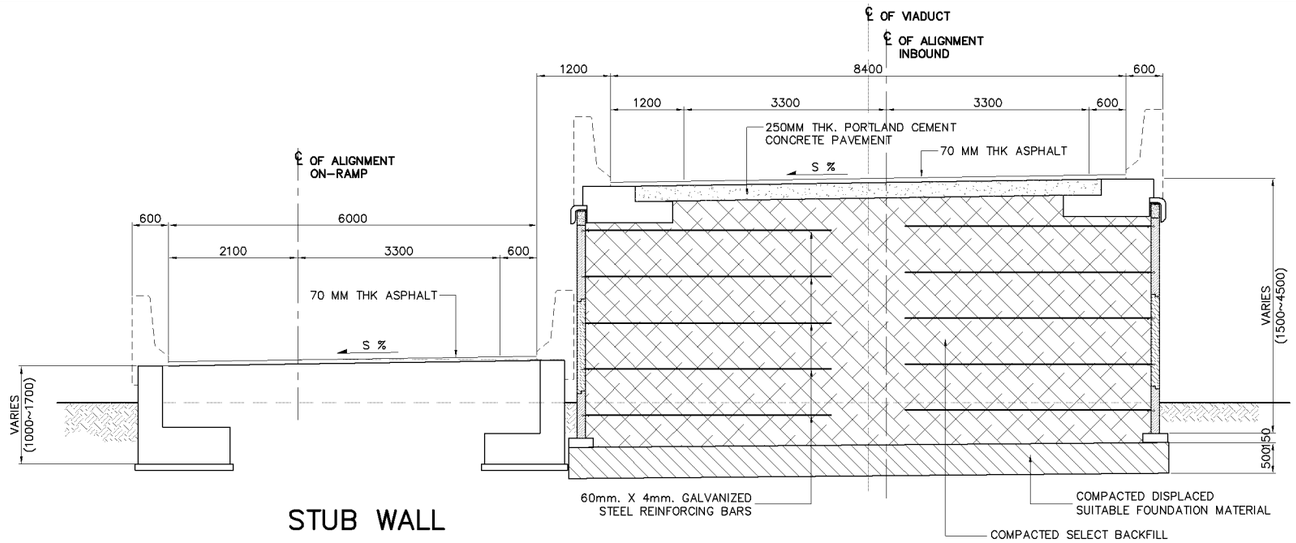

STUB WALL

MECHANICALLY STABILIZED EARTH WALL (MSE)

2 SCALE

TYPICAL SECTION – STA. 3+140.000 TO STA. 3+225.000

1:100

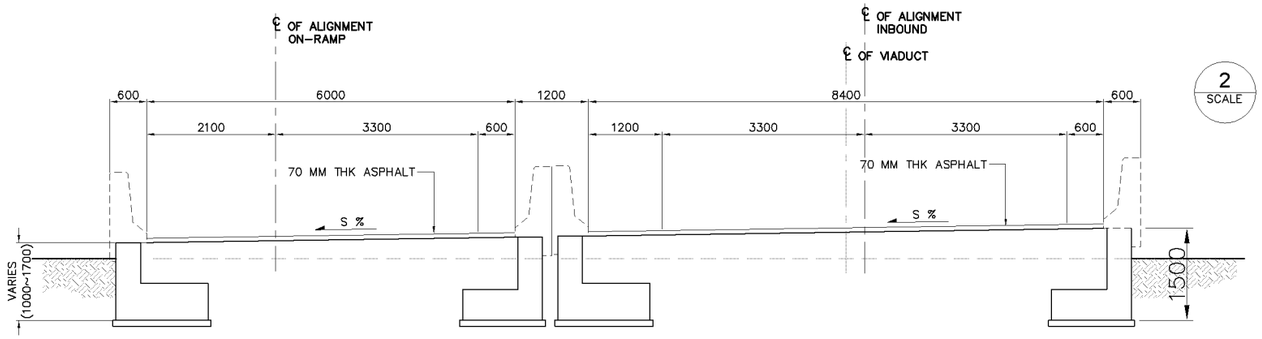

STUB WALL

1 SCALE

TYPICAL SECTION – STA. 3+130.000 TO STA. 3+140.000

1:100

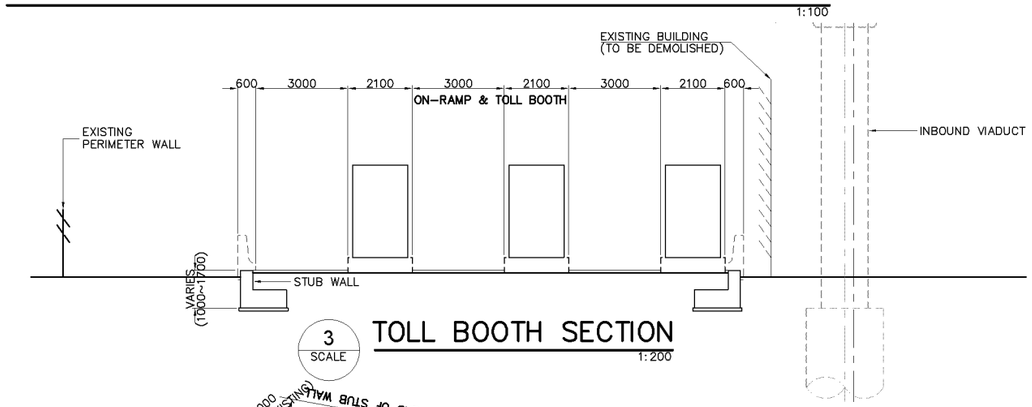

3 SCALE

TOLL BOOTH SECTION

1:200

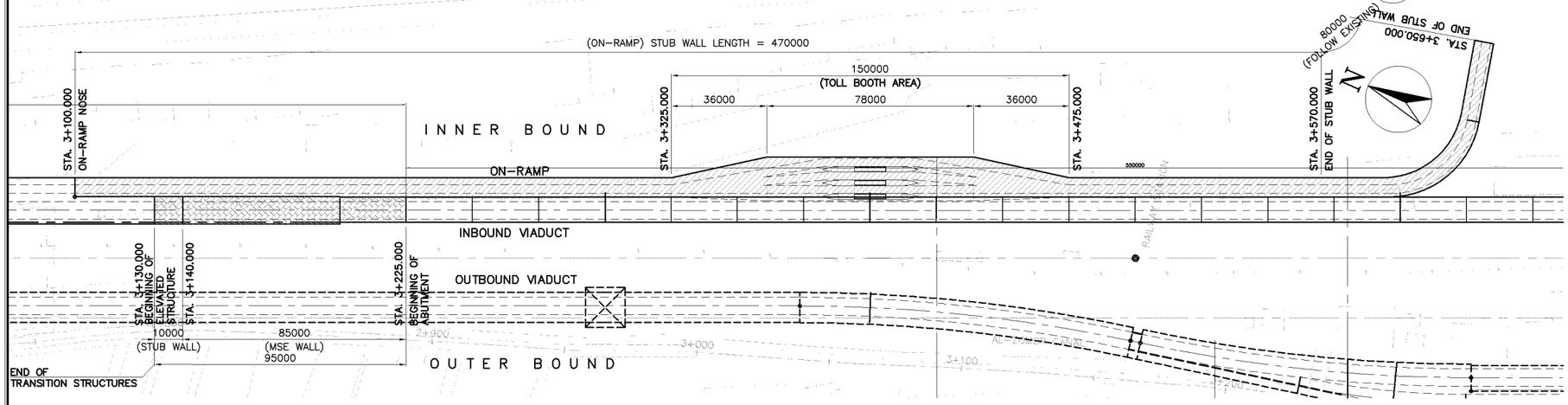

A SCALE

PLAN LAYOUT ON-RAMP / APPROACH EMBANKMENT INNER BOUND

1:2000

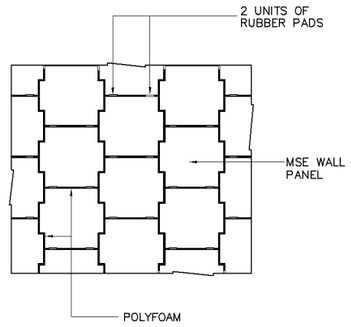

TYPICAL MSE WALL PANEL LAYOUT

4 SCALE

TYPICAL DETAIL

NTS

KATAHIRA & ENGINEERS INTERNATIONAL PRICE WATERHOUSE COOPERS ADVISORY CO., LTD.	JICA JAPAN INTERNATIONAL COOPERATION AGENCY	GENERAL AUTHORITY FOR ROADS BRIDGES AND LAND TRANSPORT (GARBLT) MINISTRY OF TRANSPORT ARAB REPUBLIC OF EGYPT	PROJECT AND LOCATION : FEASIBILITY STUDY ON HIGH PRIORITY URBAN TOLL EXPRESSWAYS IN CAIRO E1-2	SCALE : 1:2000 1:100 1:200 FULL SIZE A3	DRAWING TITLE : ON-RAMP / VIADUCT - INBOUND APPROACH EMBANKMENT LAYOUT STUB WALL DETAIL & TOLL BOOTH SECTION	DRAWING NO : E1-2/S-25 SHEET NO : 25 / 48

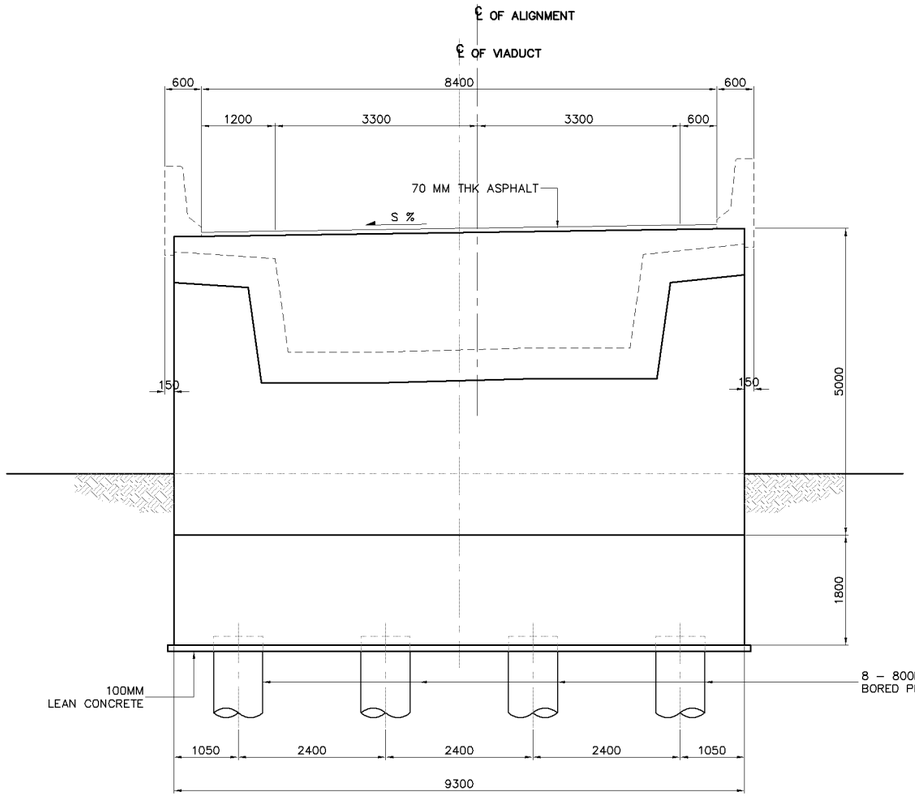

1 SCALE **FRONT ELEVATION** 1:100

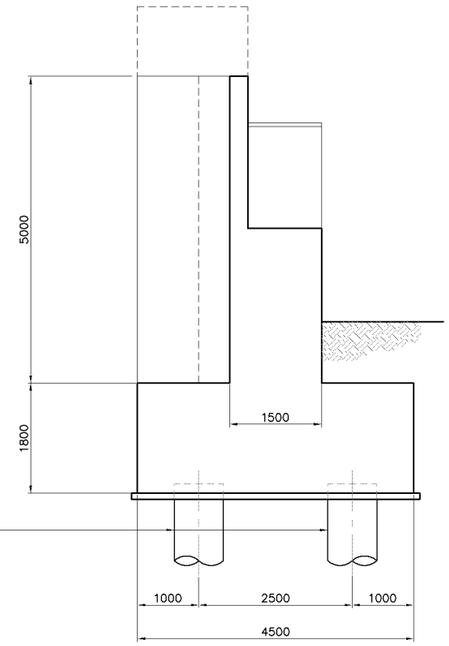

2 SCALE **SIDE ELEVATION** 1:100

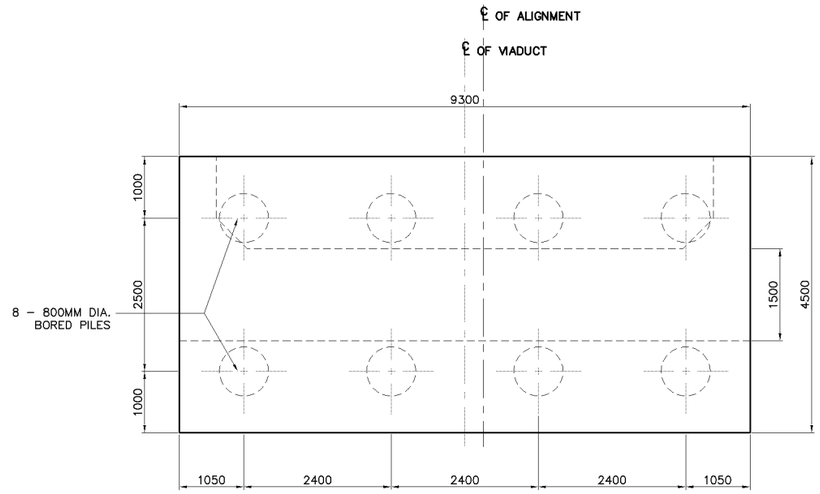

3 SCALE **PLAN ON PILE CAP** 1:100

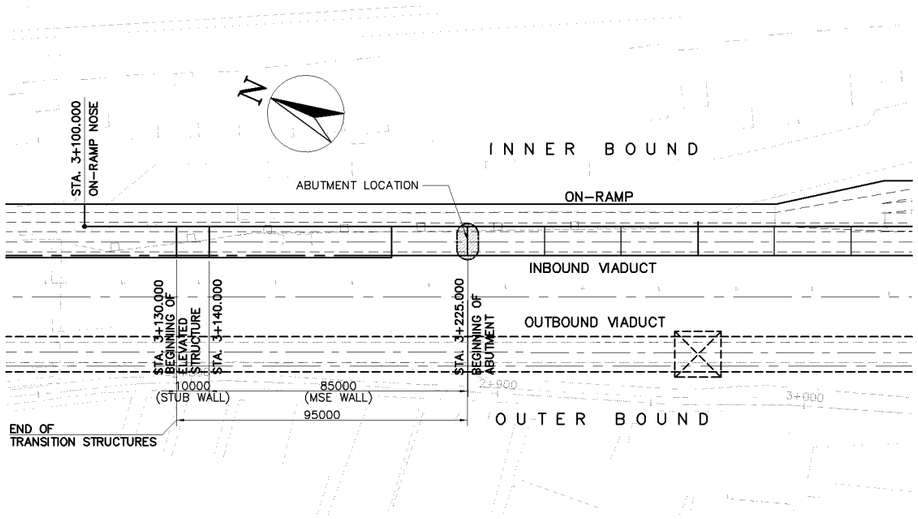

A SCALE **PLAN** 1:2000

SUMMARY OF QUANTITIES - ABUTMENT

DESCRIPTION	UNIT	QUANTITIES		
		ABUTMENT	PILECAP	TOTAL
EARTH WORKS				
STRUCTURE EXCAVATION	CU.M.	121.00		121.00
FOUNDATION FILL	CU.M.			
STRUCTURE BACKFILL	CU.M.	86.00		86.00
STRUCTURE WORKS				
CAST IN PLACE BORED PILES (800mm Dia.)	M.	160.00		160.00
PILE LOAD TEST – STATIC (800mm Dia.)	CU.M.	1.00		1.00
STRUCTURAL CONCRETE Fcu=300 kg/cm2	CU.M.	43.00	78.00	121.00
REINFORCING STEEL BAR	M.T.	9.00	16.00	24.00

KATAHIRA & ENGINEERS INTERNATIONAL
PRICE WATERHOUSE COOPERS ADVISORY CO., LTD.

JICA
JAPAN INTERNATIONAL COOPERATION AGENCY

GENERAL AUTHORITY FOR ROADS BRIDGES AND LAND TRANSPORT (GARBLT)
MINISTRY OF TRANSPORT
ARAB REPUBLIC OF EGYPT

PROJECT AND LOCATION : FEASIBILITY STUDY ON HIGH PRIORITY URBAN TOLL EXPRESSWAYS IN CAIRO E1-2

SCALE : 1:2000 1:200 FULL SIZE A3

DRAWING TITLE : VIADUCT INBOUND ABUTMENT LAYOUT & SECTIONS (STA. 3+225.000)

DRAWING NO : E1-2/S-26

SHEET NO : 26 / 48

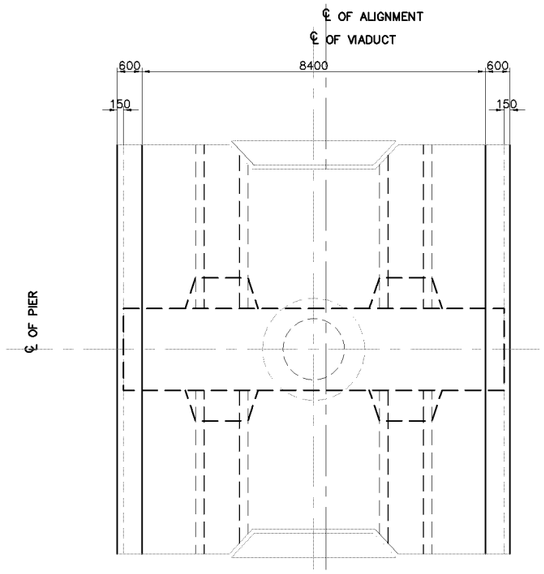

1 SCALE **PLAN** 1:150

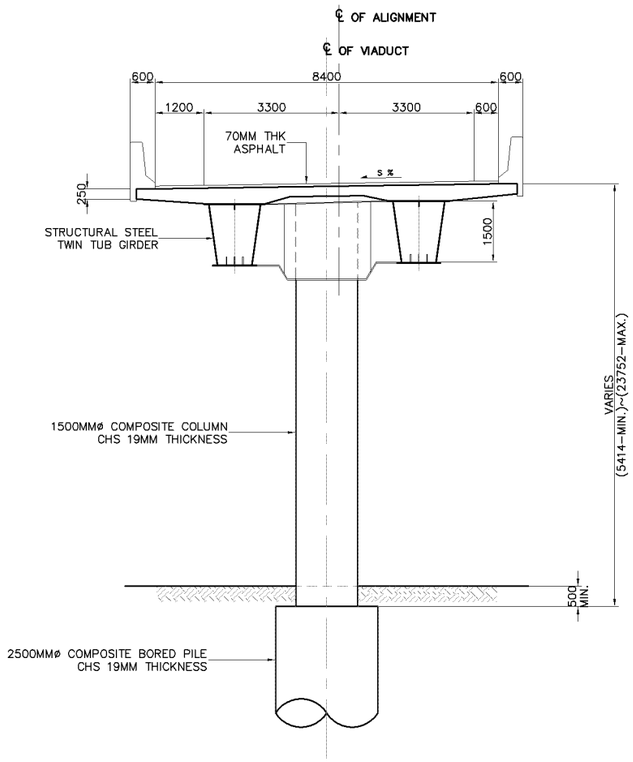

2 SCALE **TYPICAL PIER ELEVATION** 1:150

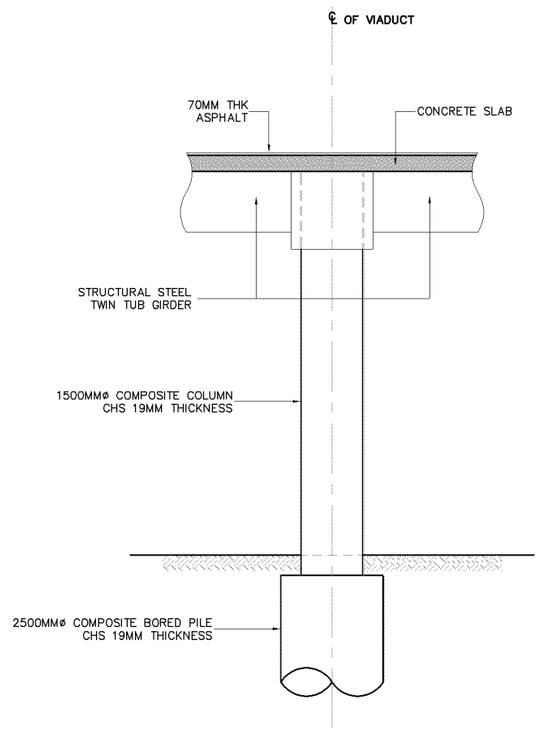

3 SCALE **SIDE ELEVATION** 1:150

SUMMARY OF QUANTITIES - 42 PIERS

DESCRIPTION	UNIT	QUANTITIES		
		BORED PILE	COLUMN	TOTAL
EARTH WORKS				
STRUCTURE EXCAVATION	CU.M.			
ROCK EXCAVATION	CU.M.			
STRUCTURE WORKS				
CAST IN PLACE BORED PILES (2500mm Dia.)	M.	840		840
PILE LOAD TEST – STATIC (2500mm Dia.)	NO.	42		42
STRUCTURAL CONCRETE Fcu = 450kg/cm2	CU.M.		1528	1528
COMPOSITE STEEL (19MM THK.)	M.T.	1172	720	1892
REINFORCING STEEL BAR	M.T.		382	382
STRUCTURAL STEEL COPING	M.T.		603	603

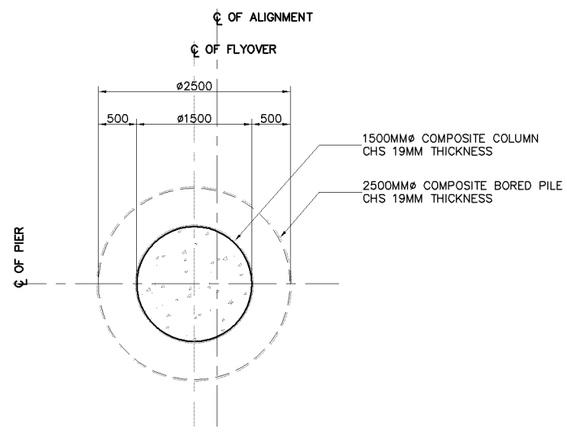

4 SCALE **COLUMN SECTION** 1:80

KATAHIRA & ENGINEERS INTERNATIONAL PRICE WATERHOUSE COOPERS ADVISORY CO., LTD.	JICA JAPAN INTERNATIONAL COOPERATION AGENCY	GENERAL AUTHORITY FOR ROADS BRIDGES AND LAND TRANSPORT (GARBLT) MINISTRY OF TRANSPORT ARAB REPUBLIC OF EGYPT	PROJECT AND LOCATION : FEASIBILITY STUDY ON HIGH PRIORITY URBAN TOLL EXPRESSWAYS IN CAIRO E1-2	SCALE : 1:150 1:80 FULL SIZE A3	DRAWING TITLE : VIADUCT INBOUND PIER LAYOUT & SECTIONS PIERS (P1-P42)	DRAWING NO : E1-2/S-27 SHEET NO : 27 / 48

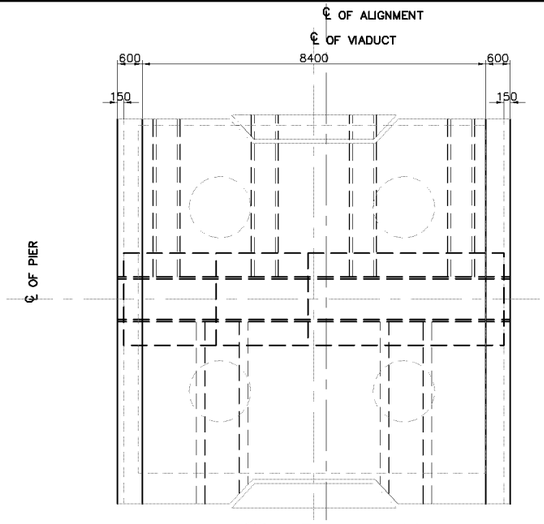

1 SCALE **PLAN** 1:150

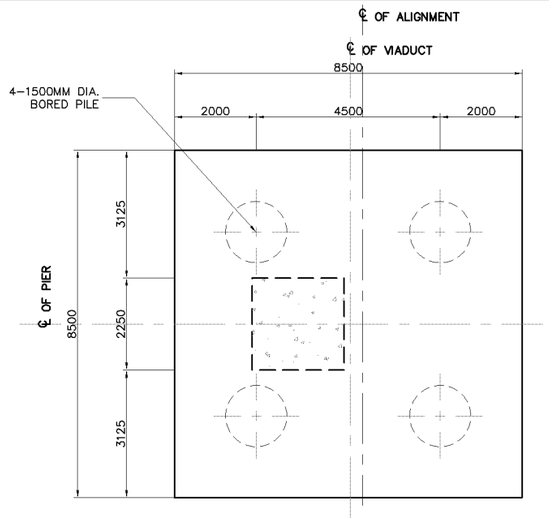

SUMMARY OF QUANTITIES - 2 PIERS (P43 & P56) EXP.

DESCRIPTION	UNIT	QUANTITIES			
		PILE CAP	COLUMN	COPING	TOTAL
EARTH WORKS					
STRUCTURE EXCAVATION	CU.M.	607			607
STRUCTURE BACKFILL	CU.M.	289			289
STRUCTURE WORKS					
CAST IN PLACE BORED PILES (1500mm Dia.)	M.	160			160
PILE LOAD TEST – STATIC (1500mm Dia.)	NO.	2			2
STRUCTURAL CONCRETE Fcu = 450kg/cm2	CU.M.		150	60	210
STRUCTURAL CONCRETE Fcu = 300kg/cm2	CU.M.	318			318
REINFORCING STEEL BAR	M.T.	64	38	15	117

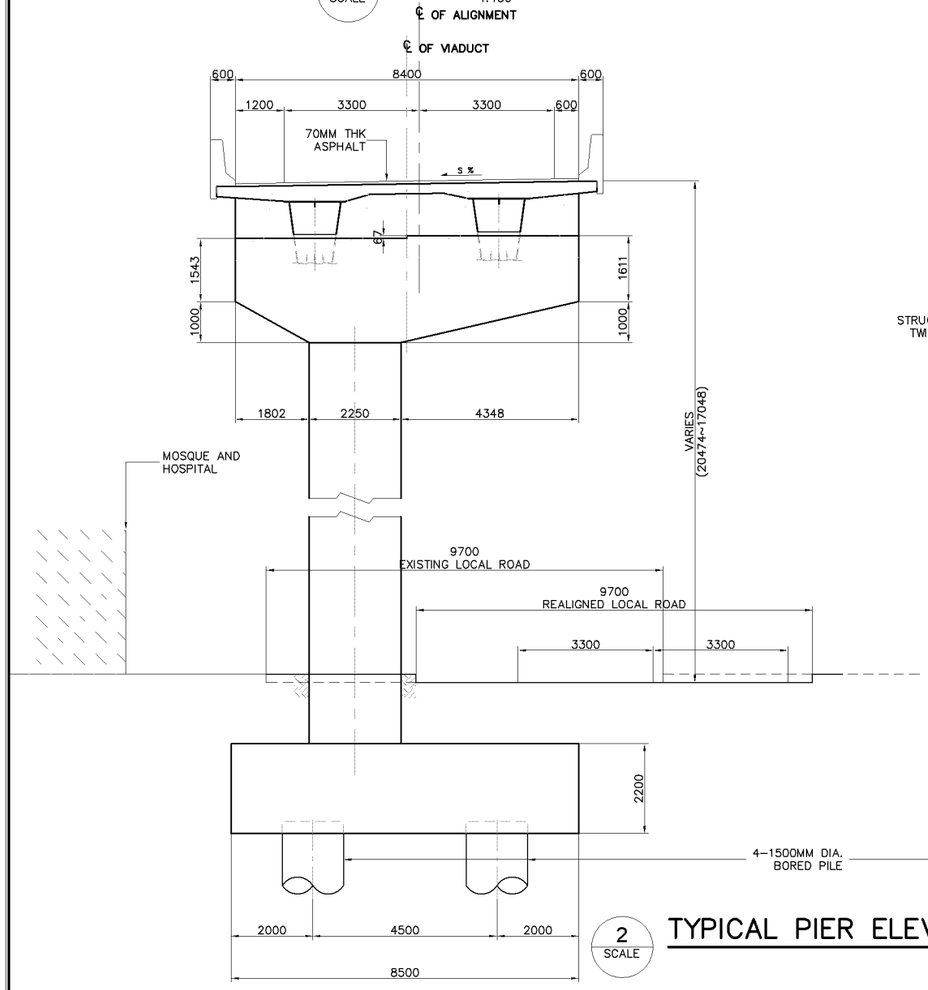

2 SCALE **TYPICAL PIER ELEVATION** 1:150

5 SCALE **PLAN ON PILE CAP** 1:150

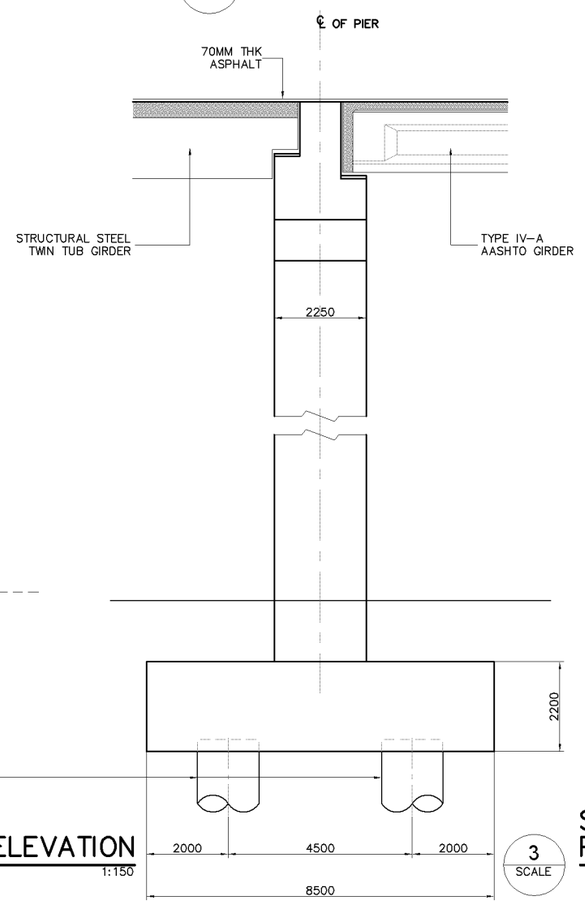

3 SCALE **SIDE ELEVATION PIER (P43)** 1:150

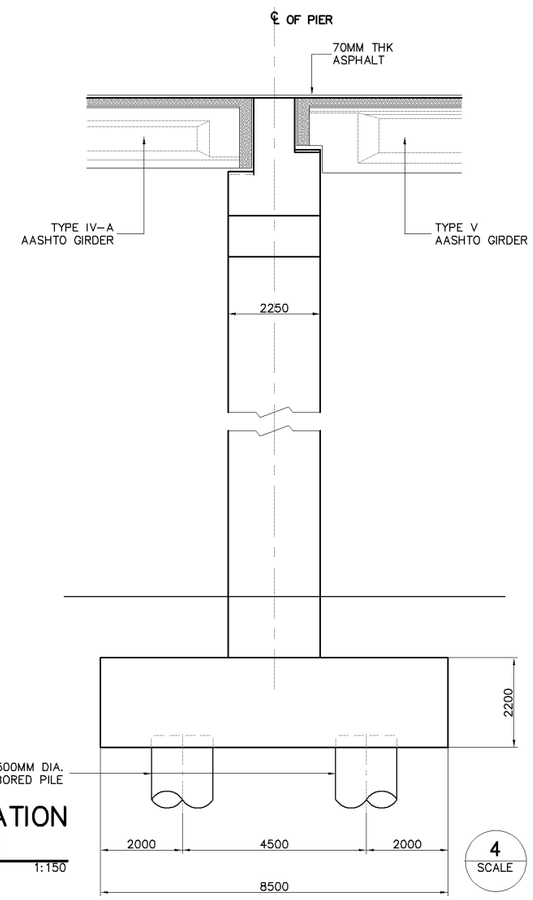

4 SCALE **SIDE ELEVATION PIER (P56)** 1:150

KATAHIRA & ENGINEERS INTERNATIONAL PRICE WATERHOUSE COOPERS ADVISORY CO., LTD.	JICA JAPAN INTERNATIONAL COOPERATION AGENCY	GENERAL AUTHORITY FOR ROADS BRIDGES AND LAND TRANSPORT (GARBLT) MINISTRY OF TRANSPORT ARAB REPUBLIC OF EGYPT	PROJECT AND LOCATION : FEASIBILITY STUDY ON HIGH PRIORITY URBAN TOLL EXPRESSWAYS IN CAIRO E1-2	SCALE : 1:150 FULL SIZE A3	DRAWING TITLE : VIADUCT INBOUND PIER LAYOUT & SECTIONS (EXPANSION) PIERS (P43 & P56)	DRAWING NO : E1-2/S-28 SHEET NO : 28 / 48

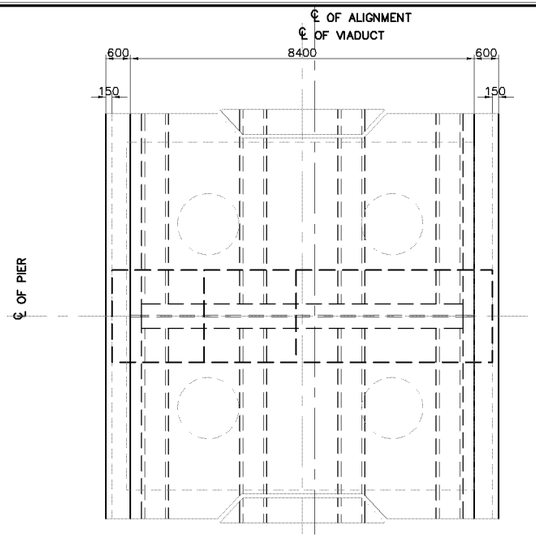

1 SCALE **PLAN** 1:150

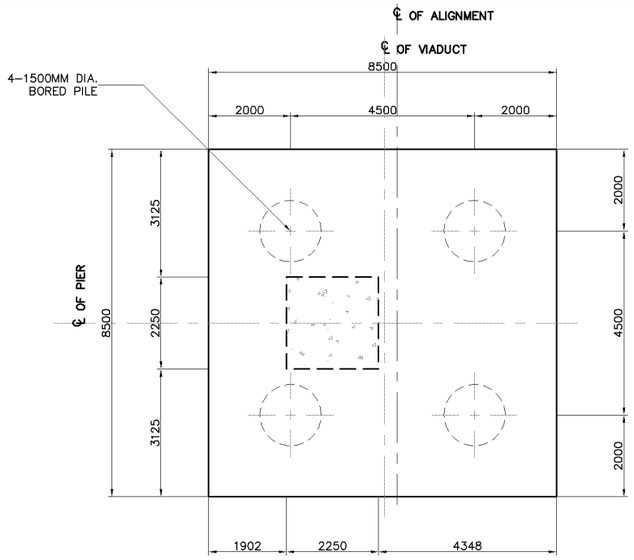

1 SCALE **PLAN ON PILE CAP** 1:150

SUMMARY OF QUANTITIES - 12 PIERS (P44-P55) CONTINUOUS & EXPANSION

DESCRIPTION	UNIT	QUANTITIES			
		PILE CAP	COLUMN	COPING	TOTAL
EARTH WORKS					
STRUCTURE EXCAVATION	CU.M.	3641			3641
STRUCTURE BACKFILL	CU.M.	1734			1734
STRUCTURE WORKS					
CAST IN PLACE BORED PILES (1500mm Dia.)	M.	960			960
PILE LOAD TEST – STATIC (1500mm Dia.)	NO.	12			12
STRUCTURAL CONCRETE Fcu = 450kg/cm2	CU.M.		934	454	1388
STRUCTURAL CONCRETE Fcu = 300kg/cm2	CU.M.	1907			1907
REINFORCING STEEL BAR	M.T.	381	234	113	728

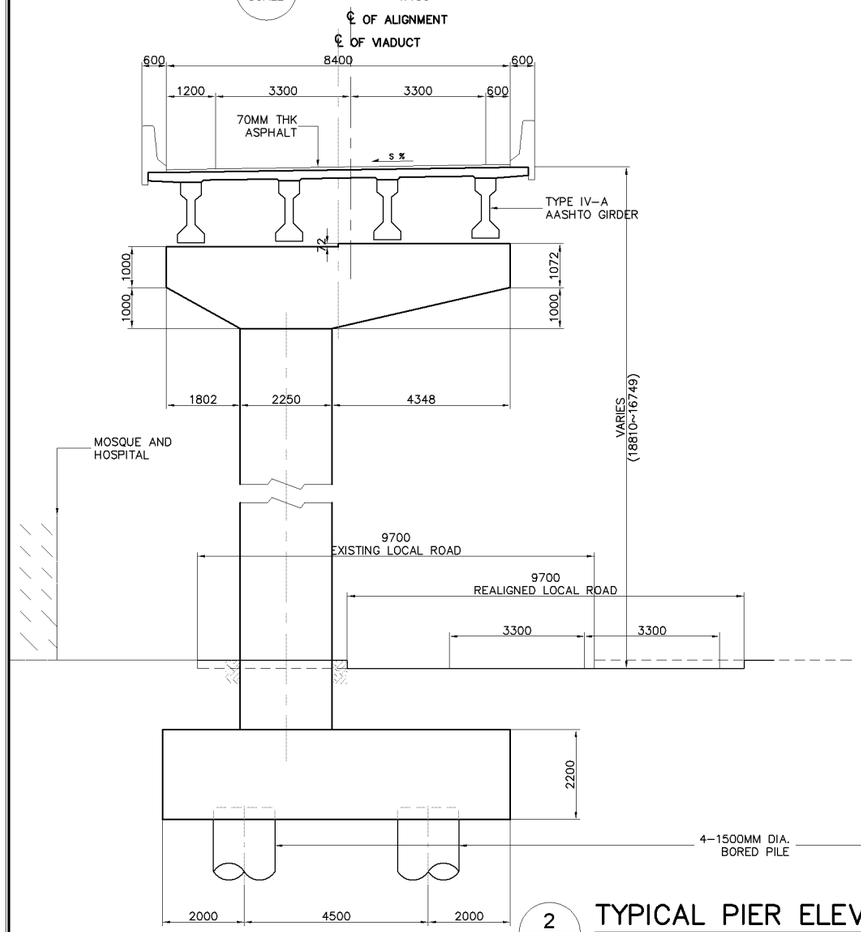

2 SCALE **TYPICAL PIER ELEVATION** 1:150

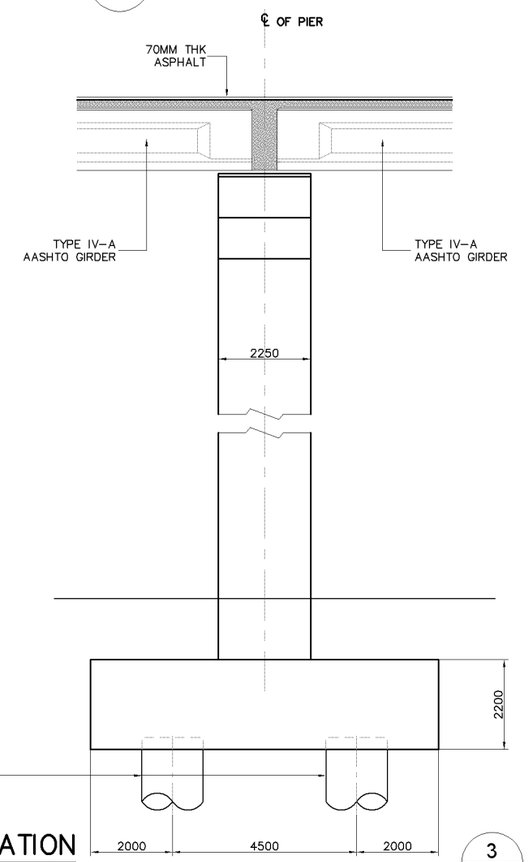

3 SCALE **SIDE ELEVATION (CONTINUOUS)** 1:150

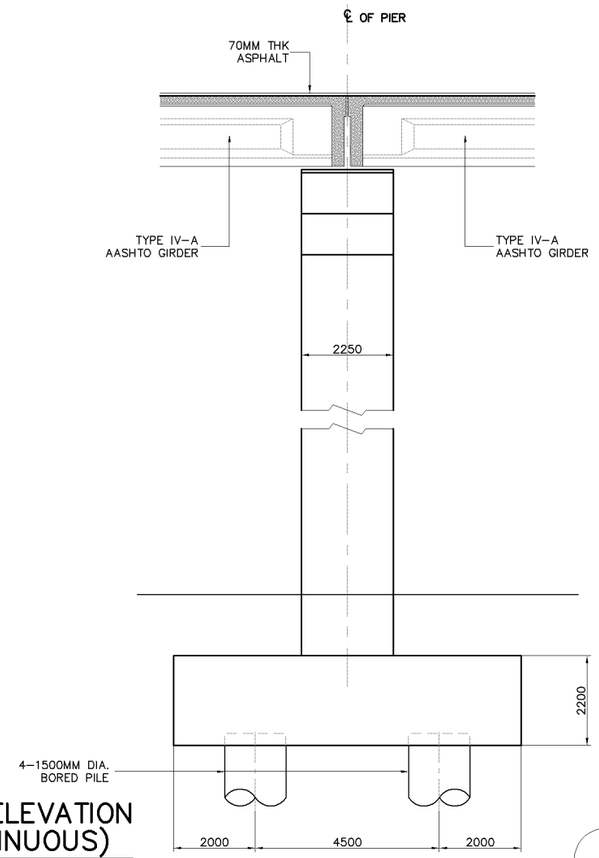

4 SCALE **SIDE ELEVATION (EXPANSION)** 1:150

KATAHIRA & ENGINEERS INTERNATIONAL PRICE WATERHOUSE COOPERS ADVISORY CO., LTD.	JICA JAPAN INTERNATIONAL COOPERATION AGENCY	GENERAL AUTHORITY FOR ROADS BRIDGES AND LAND TRANSPORT (GARBLT) MINISTRY OF TRANSPORT ARAB REPUBLIC OF EGYPT	PROJECT AND LOCATION : FEASIBILITY STUDY ON HIGH PRIORITY URBAN TOLL EXPRESSWAYS IN CAIRO E1-2	SCALE : 1:150 FULL SIZE A3	DRAWING TITLE : VIADUCT INBOUND PIER LAYOUT & SECTIONS (P44-P55) CONTINUOUS & EXPANSION	DRAWING NO : E1-2/S-29 SHEET NO : 29 / 48

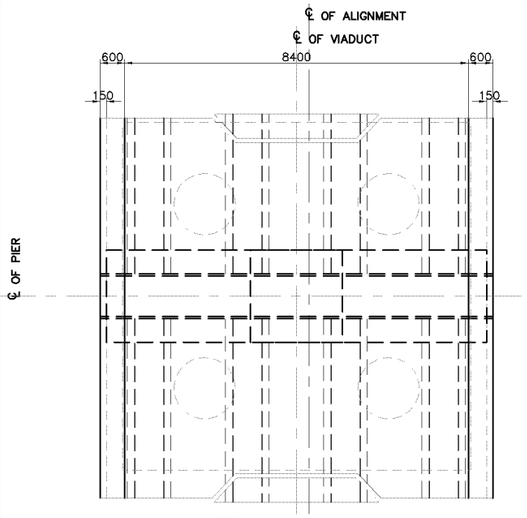

1 SCALE **PLAN** 1:150

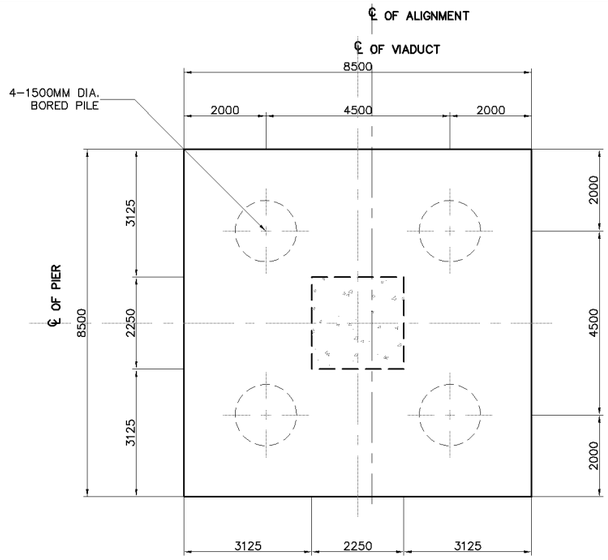

5 SCALE **PLAN ON PILE CAP** 1:150

SUMMARY OF QUANTITIES - 2 PIERS (P57 & P59) EXP.

DESCRIPTION	UNIT	QUANTITIES			
		PILE CAP	COLUMN	COPING	TOTAL
EARTH WORKS					
STRUCTURE EXCAVATION	CU.M.	607			607
STRUCTURE BACKFILL	CU.M.	289			289
STRUCTURE WORKS					
CAST IN PLACE BORED PILES (1500mm Dia.)	M.	160			160
PILE LOAD TEST – STATIC (1500mm Dia.)	NO.	2			2
STRUCTURAL CONCRETE Fcu = 450kg/cm2	CU.M.		158	60	218
STRUCTURAL CONCRETE Fcu = 300kg/cm2	CU.M.	318			318
REINFORCING STEEL BAR	M.T.	64	40	15	119

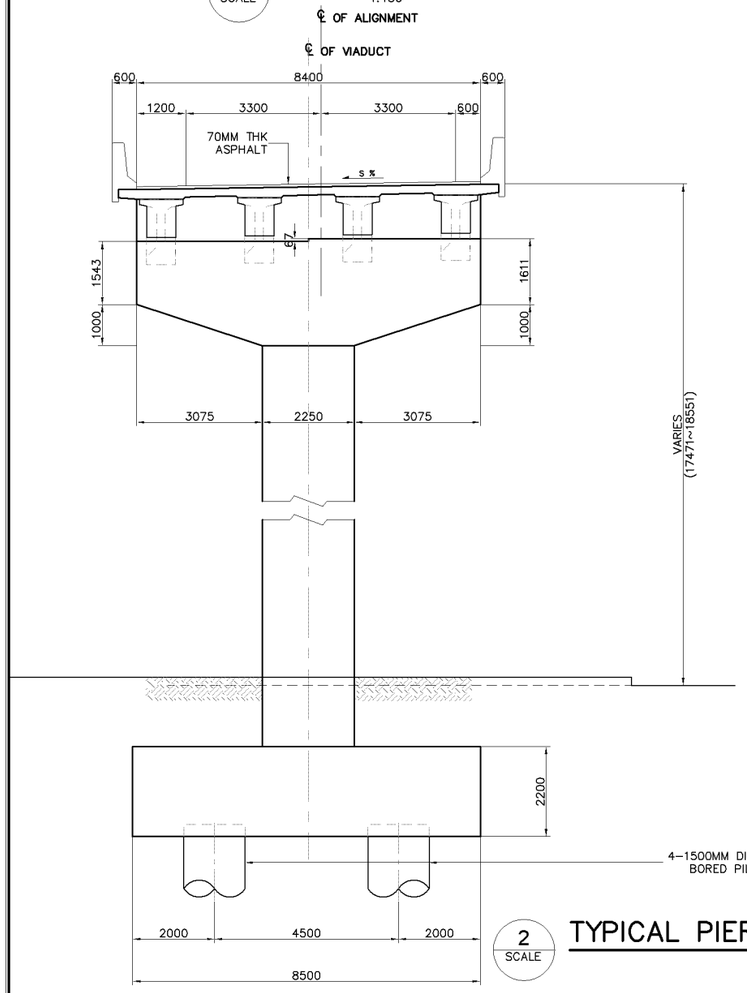

2 SCALE **TYPICAL PIER ELEVATION** 1:150

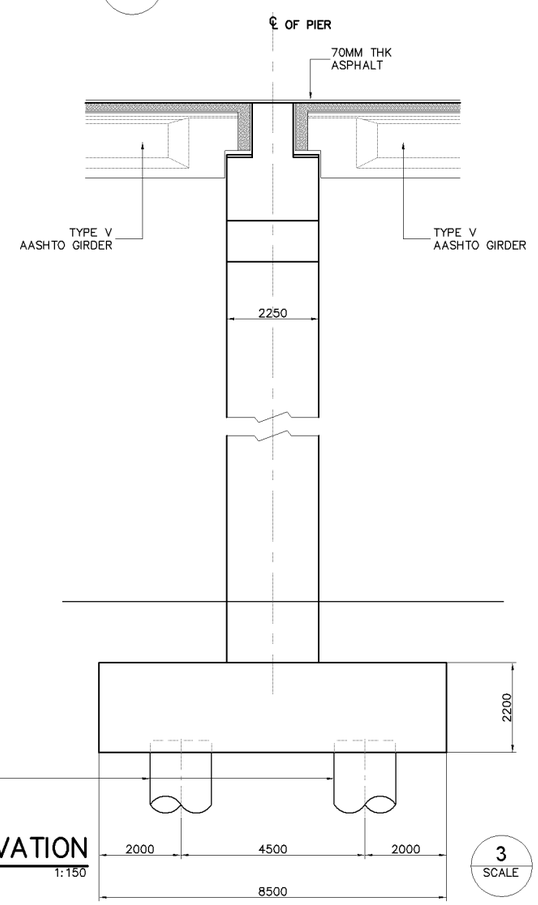

3 SCALE **SIDE ELEVATION (PIER P57)** 1:150

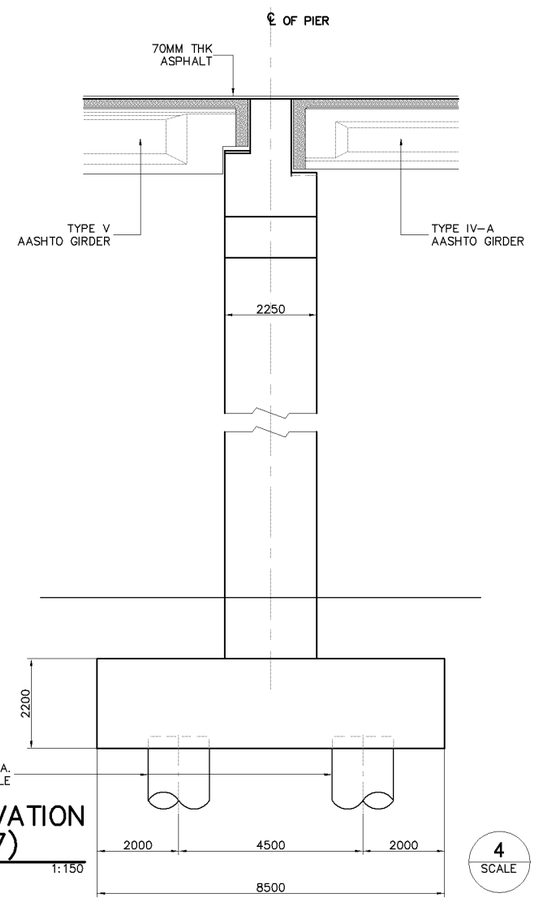

4 SCALE **SIDE ELEVATION (PIER P59)** 1:150

KATAHIRA & ENGINEERS INTERNATIONAL PRICE WATERHOUSE COOPERS ADVISORY CO., LTD.	JICA JAPAN INTERNATIONAL COOPERATION AGENCY	GENERAL AUTHORITY FOR ROADS BRIDGES AND LAND TRANSPORT (GARBLT) MINISTRY OF TRANSPORT ARAB REPUBLIC OF EGYPT	PROJECT AND LOCATION : FEASIBILITY STUDY ON HIGH PRIORITY URBAN TOLL EXPRESSWAYS IN CAIRO E1-2	SCALE : 1:150 FULL SIZE A3	DRAWING TITLE : VIADUCT INBOUND PIER LAYOUT & SECTIONS (PIERS (P57 & P59)), EXP.	DRAWING NO : E1-2/S-30 SHEET NO : 30 / 48

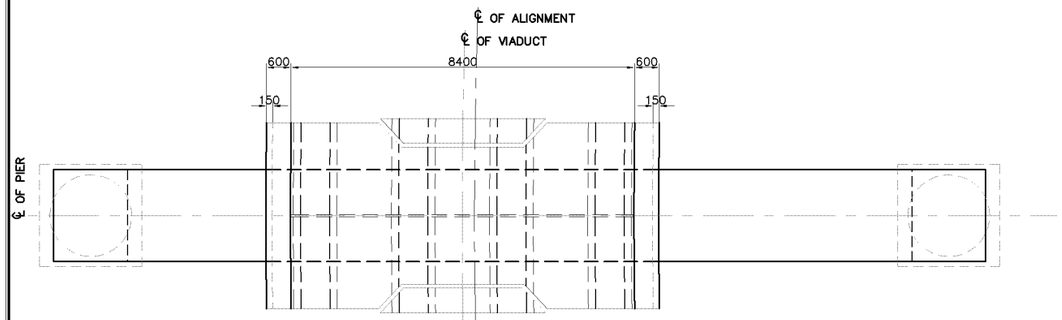

1 SCALE **PLAN** 1:150

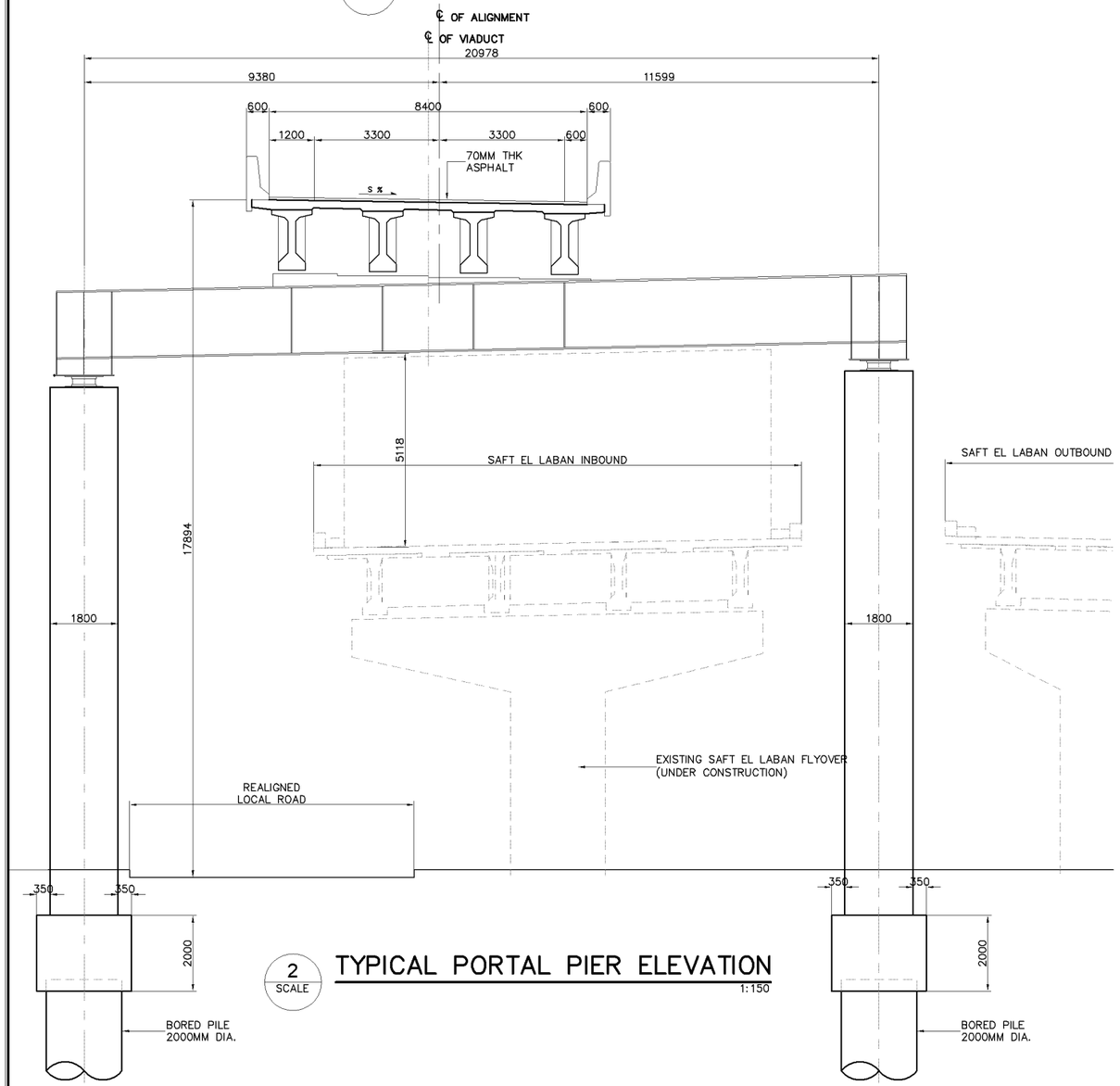

2 SCALE **TYPICAL PORTAL PIER ELEVATION** 1:150

SUMMARY OF QUANTITIES - 1 PIER (P58) PORTAL EXP.

DESCRIPTION	UNIT	QUANTITIES			
		PILE CAP	COLUMN	COPING	TOTAL
EARTH WORKS					
STRUCTURE EXCAVATION	CU.M.	40			40
STRUCTURE BACKFILL	CU.M.				
STRUCTURE WORKS					
STRUCTURAL CONCRETE Fcu = 300kg/cm2	CU.M.	25			25
STRUCTURAL CONCRETE Fcu = 450kg/cm2	CU.M.		120		120
STRUCTURAL STEEL	M.T.			36	36
REINFORCING STEEL BAR	M.T.	5	30		35
CAST IN PLACE BORED PILE (1500MM DIA.)	M.	40			40
PILE LOAD TEST – STATIC (1500MM DIA.)	NO.	1			1

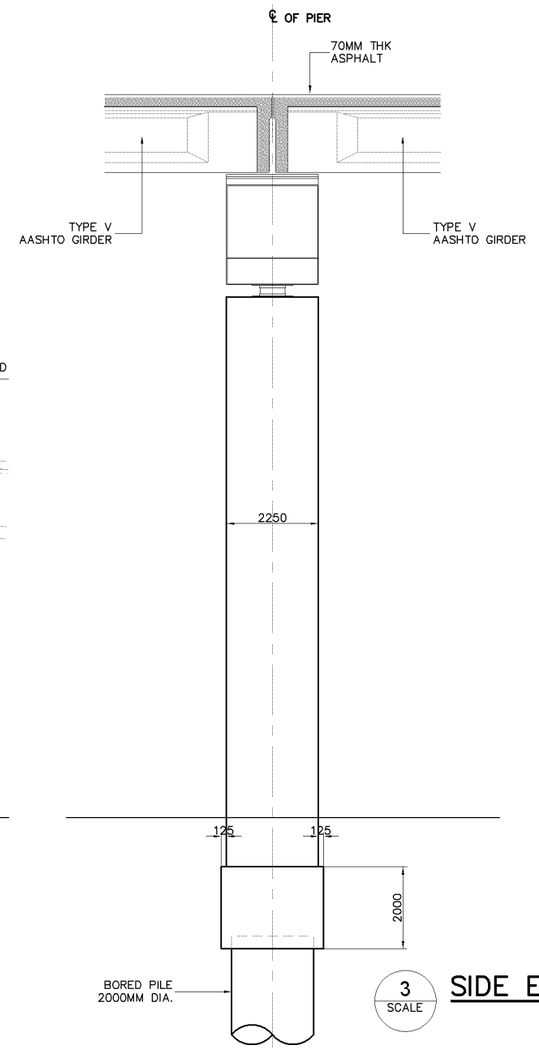

3 SCALE **SIDE ELEVATION** 1:150

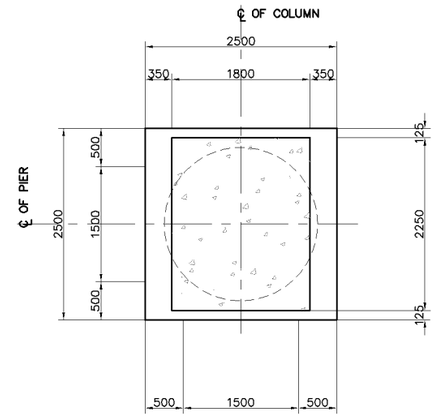

5 SCALE **COLUMN SECTION** 1:80

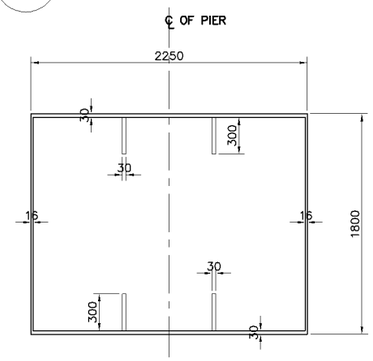

4 SCALE **COPING BEAM SECTION** 1:50

KATAHIRA & ENGINEERS INTERNATIONAL PRICE WATERHOUSE COOPERS ADVISORY CO., LTD.	JICA JAPAN INTERNATIONAL COOPERATION AGENCY	GENERAL AUTHORITY FOR ROADS BRIDGES AND LAND TRANSPORT (GARBLT) MINISTRY OF TRANSPORT ARAB REPUBLIC OF EGYPT	PROJECT AND LOCATION : FEASIBILITY STUDY ON HIGH PRIORITY URBAN TOLL EXPRESSWAYS IN CAIRO E1-2	SCALE : 1:150 1:80 1:50 FULL SIZE A3	DRAWING TITLE : VIADUCT INBOUND PORTAL PIER LAYOUT & SECTIONS PIER (P58), EXP. (STA. 4+813.000)	DRAWING NO : E1-2/S-31 SHEET NO : 31 / 48

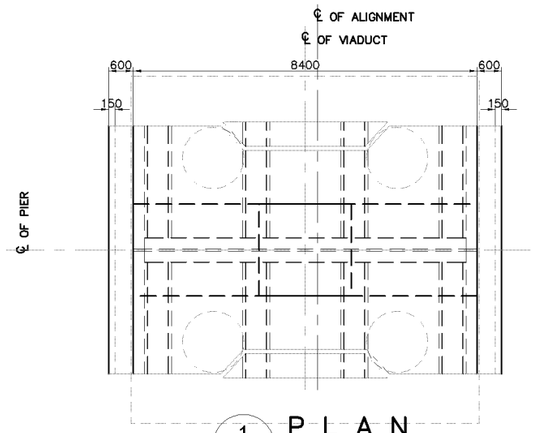

1 SCALE **PLAN** 1:150

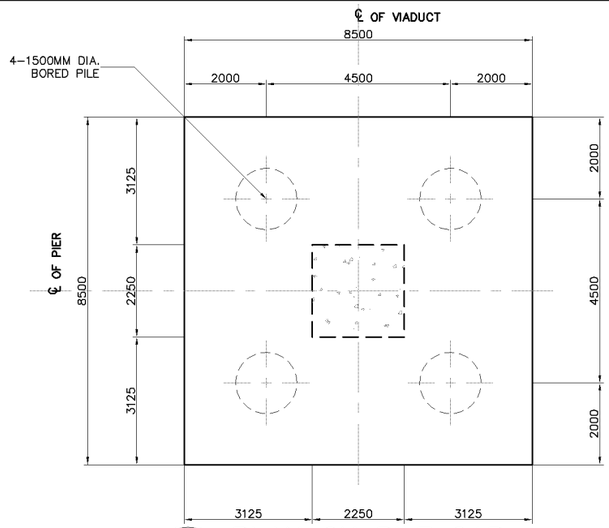

5 SCALE **PLAN ON PILE CAP** 1:150

SUMMARY OF QUANTITIES - 5 PIERS (P60-P64) CONT. & EXP.

DESCRIPTION	UNIT	QUANTITIES			
		PILE CAP	COLUMN	COPING	TOTAL
EARTH WORKS					
STRUCTURE EXCAVATION	CU.M.	1517			1517
STRUCTURE BACKFILL	CU.M.	723			723
STRUCTURE WORKS					
CAST IN PLACE BORED PILES (1500mm Dia.)	M.	400			400
PILE LOAD TEST – STATIC (1500mm Dia.)	NO.	5			5
STRUCTURAL CONCRETE Fcu = 450kg/cm2	CU.M.		409	189	598
STRUCTURAL CONCRETE Fcu = 300kg/cm2	CU.M.	795			795
REINFORCING STEEL BAR	M.T.	159	102	47	308

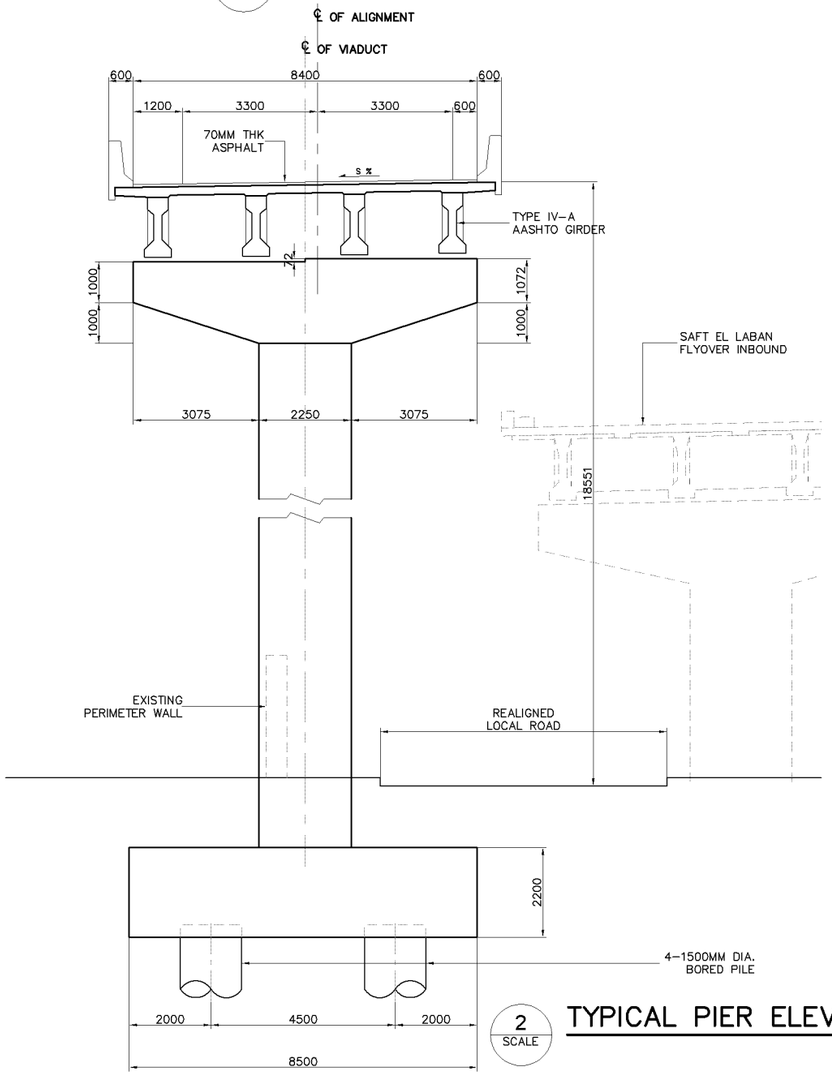

2 SCALE **TYPICAL PIER ELEVATION** 1:150

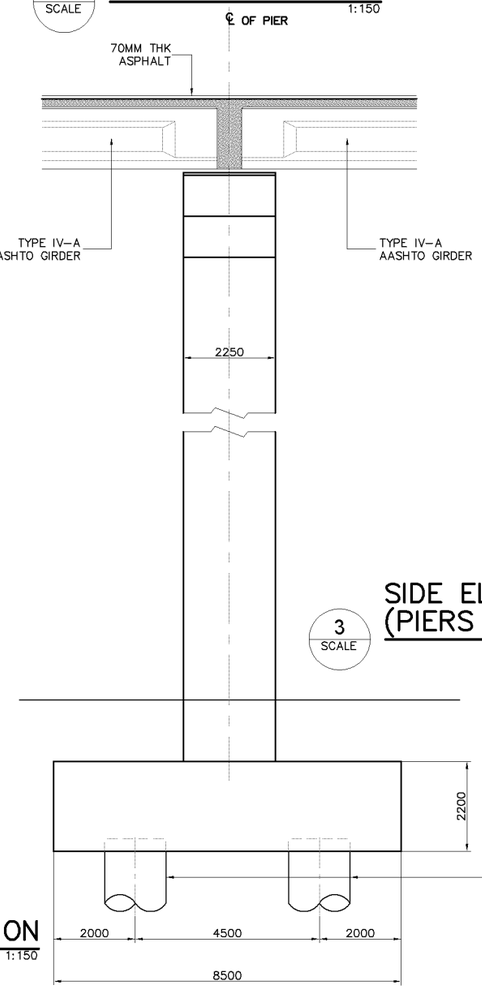

3 SCALE **SIDE ELEVATION (CONTINUOUS) (PIERS (P60–P61 & P63–P64))** 1:150

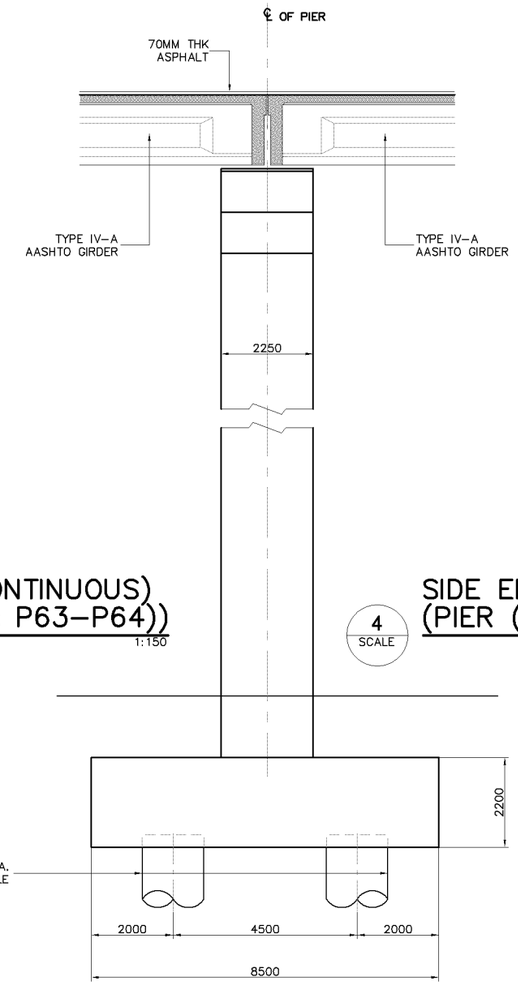

4 SCALE **SIDE ELEVATION (PIER (P62)), EXPANSION** 1:150

KATAHIRA & ENGINEERS INTERNATIONAL PRICE WATERHOUSE COOPERS ADVISORY CO., LTD.	JICA JAPAN INTERNATIONAL COOPERATION AGENCY	GENERAL AUTHORITY FOR ROADS BRIDGES AND LAND TRANSPORT (GARBLT) MINISTRY OF TRANSPORT ARAB REPUBLIC OF EGYPT	PROJECT AND LOCATION : FEASIBILITY STUDY ON HIGH PRIORITY URBAN TOLL EXPRESSWAYS IN CAIRO E1-2	SCALE : 1:150 1:80 FULL SIZE A3	DRAWING TITLE : VIADUCT INBOUND PIER LAYOUT & SECTIONS (PIERS (P60-P64)), CONT. & EXP.	DRAWING NO : E1-2/S-32 SHEET NO : 32 / 48

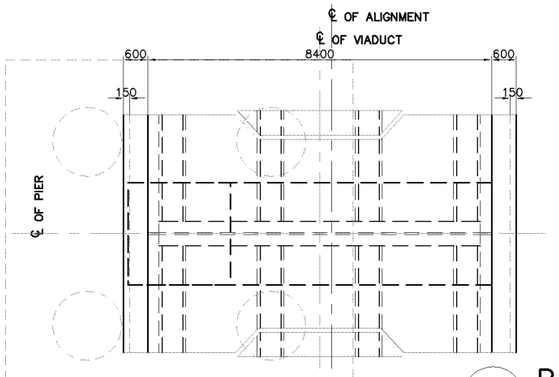

1 SCALE **PLAN** 1:150

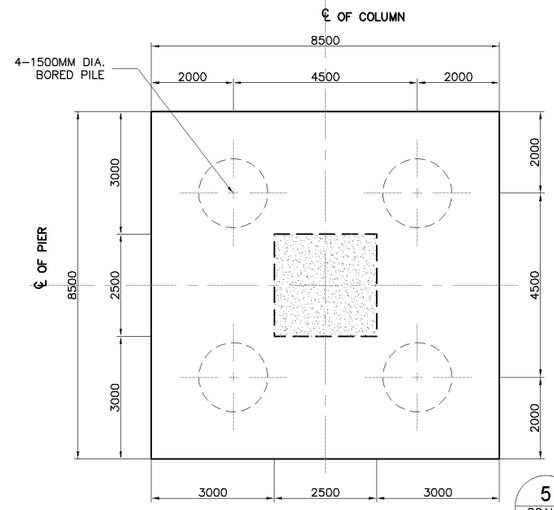

5 SCALE **PLAN ON PILE CAP** 1:150

SUMMARY OF QUANTITIES - 4 PIERS (P65-P68) CONT. & EXP.

D E S C R I P T I O N	UNIT	Q U A N T I T I E S			
		PILE CAP	COLUMN	COPING	TOTAL
EARTH WORKS					
STRUCTURE EXCAVATION	CU.M.	1214.00			1214.00
STRUCTURE BACKFILL	CU.M.	578.00			578.00
STRUCTURE WORKS					
CAST IN PLACE BORED PILES (1500mm Dia.)	M.	320.00			320.00
PILE LOAD TEST – STATIC (1500mm Dia.)	NO.	4.00			4.00
STRUCTURAL CONCRETE Fcu = 450kg/cm2	CU.M.		404.00	196.00	600.00
STRUCTURAL CONCRETE Fcu = 300kg/cm2	CU.M.	636.00			636.00
REINFORCING STEEL BAR	M.T.	127.00	101.00	49.00	277.00

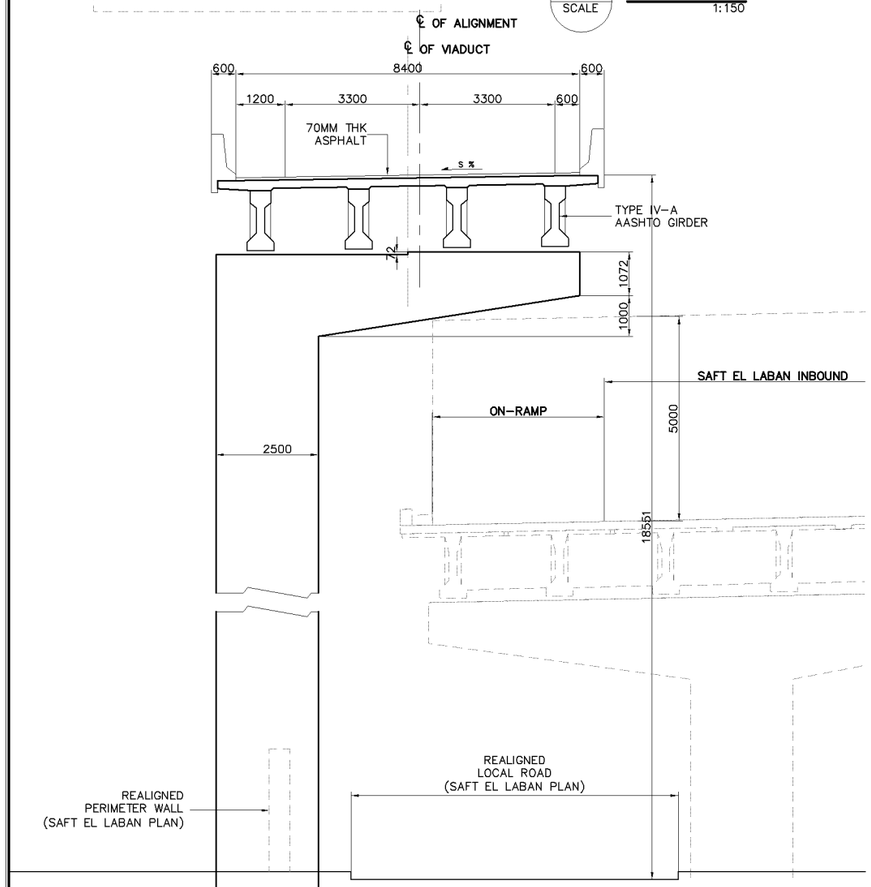

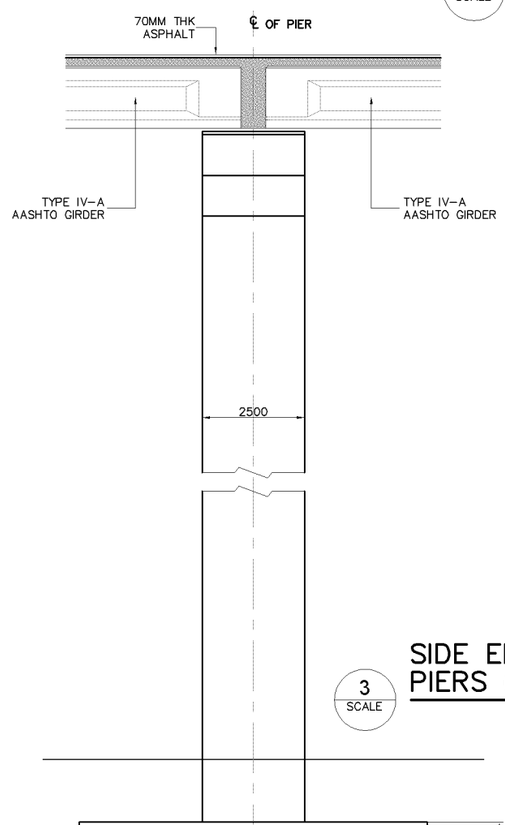

3 SCALE **SIDE ELEVATION (CONTINUOUS) PIERS (P66–P68)** 1:150

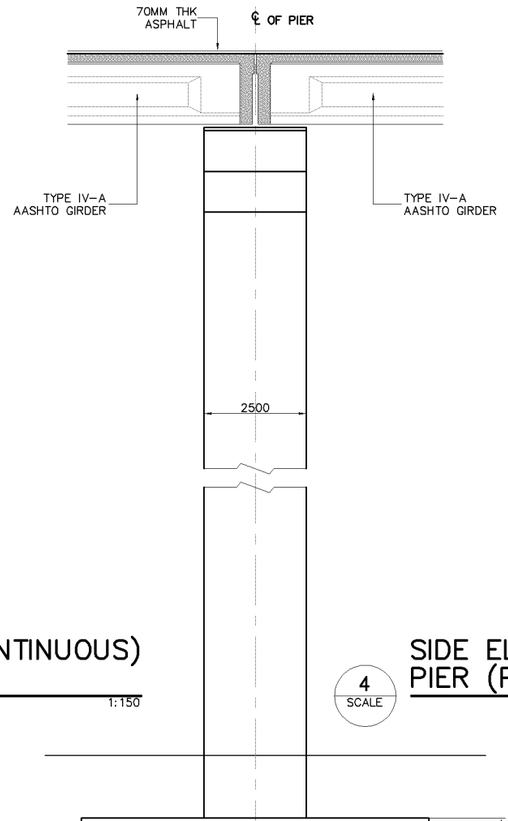

4 SCALE **SIDE ELEVATION PIER (P65), EXPANSION** 1:150

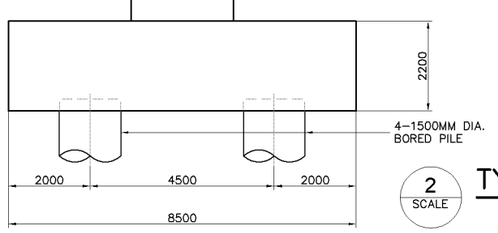

2 SCALE **TYPICAL PIER ELEVATION** 1:150

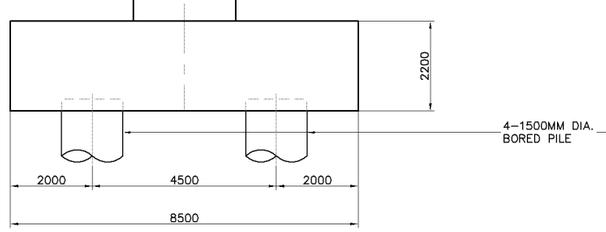

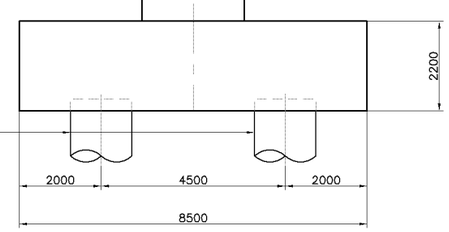

KATAHIRA & ENGINEERS INTERNATIONAL PRICE WATERHOUSE COOPERS ADVISORY CO., LTD.	JICA JAPAN INTERNATIONAL COOPERATION AGENCY	GENERAL AUTHORITY FOR ROADS BRIDGES AND LAND TRANSPORT (GARBLT) MINISTRY OF TRANSPORT ARAB REPUBLIC OF EGYPT	PROJECT AND LOCATION : FEASIBILITY STUDY ON HIGH PRIORITY URBAN TOLL EXPRESSWAYS IN CAIRO E1-2	SCALE : 1:150 1:80 FULL SIZE A3	DRAWING TITLE : VIADUCT INBOUND PIER LAYOUT & SECTIONS (PIERS (P65-P68)), CONT. & EXP.	DRAWING NO : E1-2/S-33 SHEET NO : 33 / 48

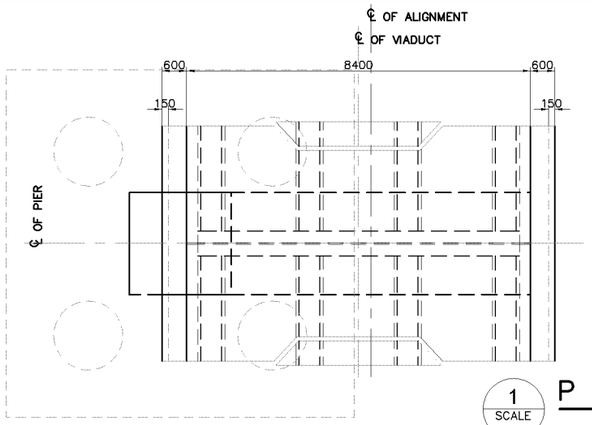

1 SCALE **PLAN** 1:150

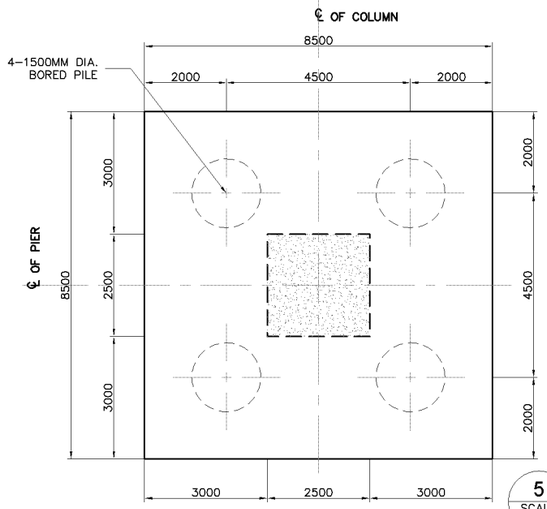

5 SCALE **PLAN ON PILE CAP** 1:150

SUMMARY OF QUANTITIES - 12 PIERS (P69-P80) CONT. & EXP.

DESCRIPTION	UNIT	QUANTITIES			
		PILE CAP	COLUMN	COPING	TOTAL
EARTH WORKS					
STRUCTURE EXCAVATION	CU.M.	3641.00			3641.00
STRUCTURE BACKFILL	CU.M.	1734.00			1734.00
STRUCTURE WORKS					
CAST IN PLACE BORED PILES (1500mm Dia.)	M.	960.00			960.00
PILE LOAD TEST – STATIC (1500mm Dia.)	NO.	12.00			12.00
STRUCTURAL CONCRETE Fcu = 450kg/cm2	CU.M.		873.00	680.00	1553.00
STRUCTURAL CONCRETE Fcu = 300kg/cm2	CU.M.	1907.00			1907.00
REINFORCING STEEL BAR	M.T.	381.00	218.00	170.00	769.00

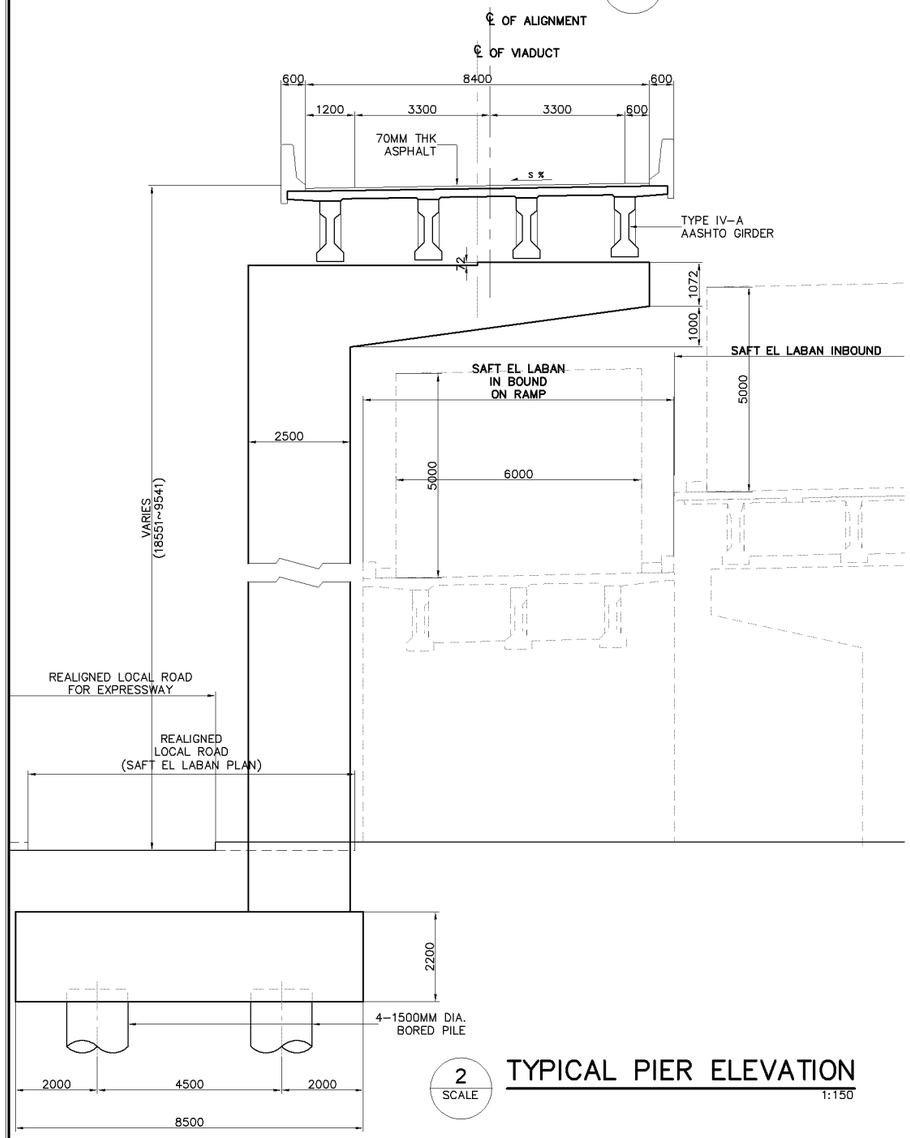

2 SCALE **TYPICAL PIER ELEVATION** 1:150

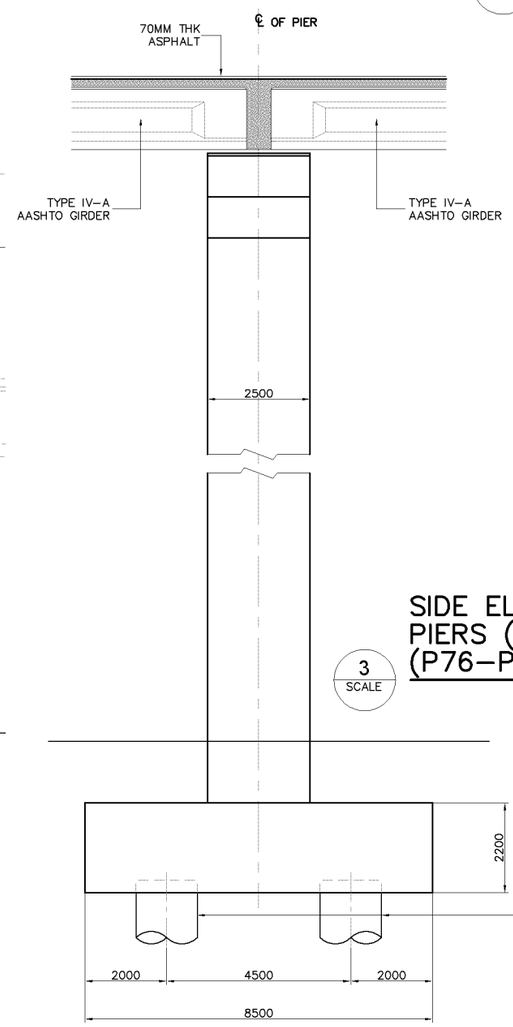

3 SCALE **SIDE ELEVATION (CONTINUOUS) PIERS (P70–P71,P73–P74) (P76–P77 & P79–P80)** 1:150

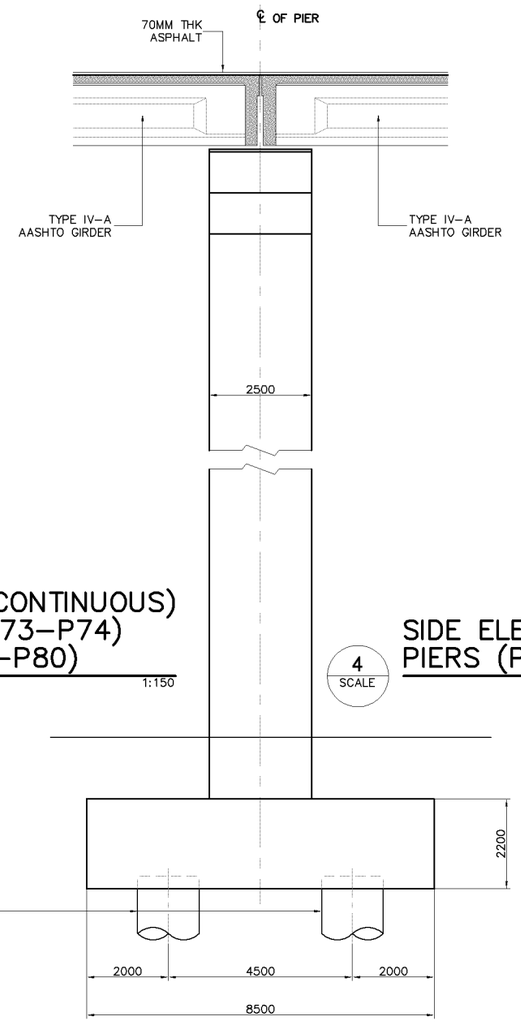

4 SCALE **SIDE ELEVATION (EXPANSION) PIERS (P69,P72,P75 & P78)** 1:150

KATAHIRA & ENGINEERS INTERNATIONAL PRICE WATERHOUSE COOPERS ADVISORY CO., LTD.	JICA JAPAN INTERNATIONAL COOPERATION AGENCY	GENERAL AUTHORITY FOR ROADS BRIDGES AND LAND TRANSPORT (GARBLT) MINISTRY OF TRANSPORT ARAB REPUBLIC OF EGYPT	PROJECT AND LOCATION : FEASIBILITY STUDY ON HIGH PRIORITY URBAN TOLL EXPRESSWAYS IN CAIRO E1-2	SCALE : 1:150 1:80 FULL SIZE A3	DRAWING TITLE : VIADUCT INBOUND PIER LAYOUT & SECTIONS (PIERS (P69-P80)), CONT. & EXP.	DRAWING NO : E1-2/S-34 SHEET NO : 34 / 48

SUMMARY OF QUANTITIES - 2 PIERS (P81 & P82) CONT. & EXP.

DESCRIPTION	UNIT	QUANTITIES			
		PILE CAP	COLUMN	COPING	TOTAL
EARTH WORKS					
STRUCTURE EXCAVATION	CU.M.	267.00			267.00
STRUCTURE BACKFILL	CU.M.	122.00			122.00
STRUCTURE WORKS					
CAST IN PLACE BORED PILES (800mm Dia.)	M.	320.00			320.00
PILE LOAD TEST – STATIC (800mm Dia.)	NO.	4.00			4.00
STRUCTURAL CONCRETE Fcu = 450kg/cm2	CU.M.		57.00		57.00
STRUCTURAL CONCRETE Fcu = 300kg/cm2	CU.M.	146.00			146.00
REINFORCING STEEL BAR	M.T.	29.00	14.00		43.00
STRUCTURAL STEEL	M.T.			51.00	51.00

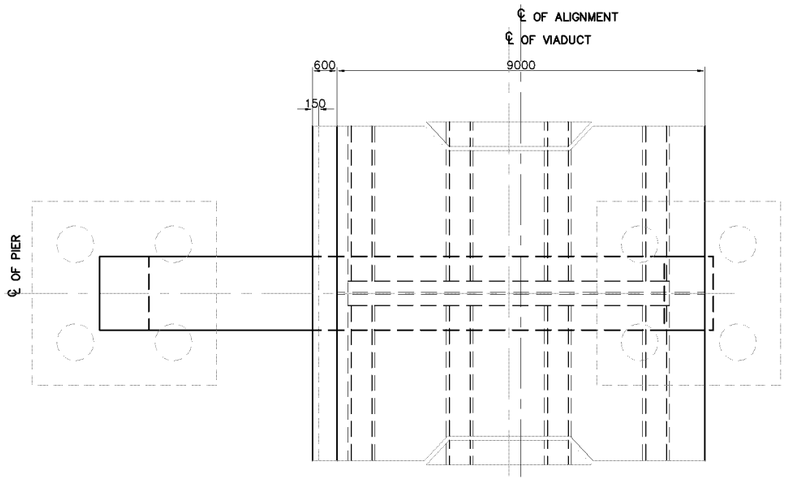

1 SCALE **PLAN** 1:150

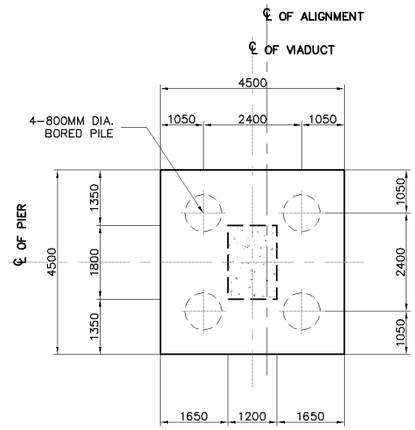

5 SCALE **PLAN ON PILE CAP** 1:150

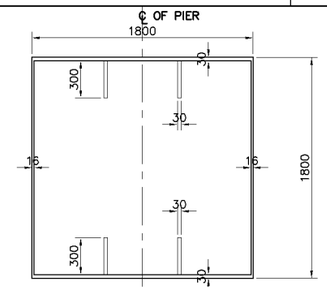

6 SCALE **COPING BEAM SECTION** 1:50

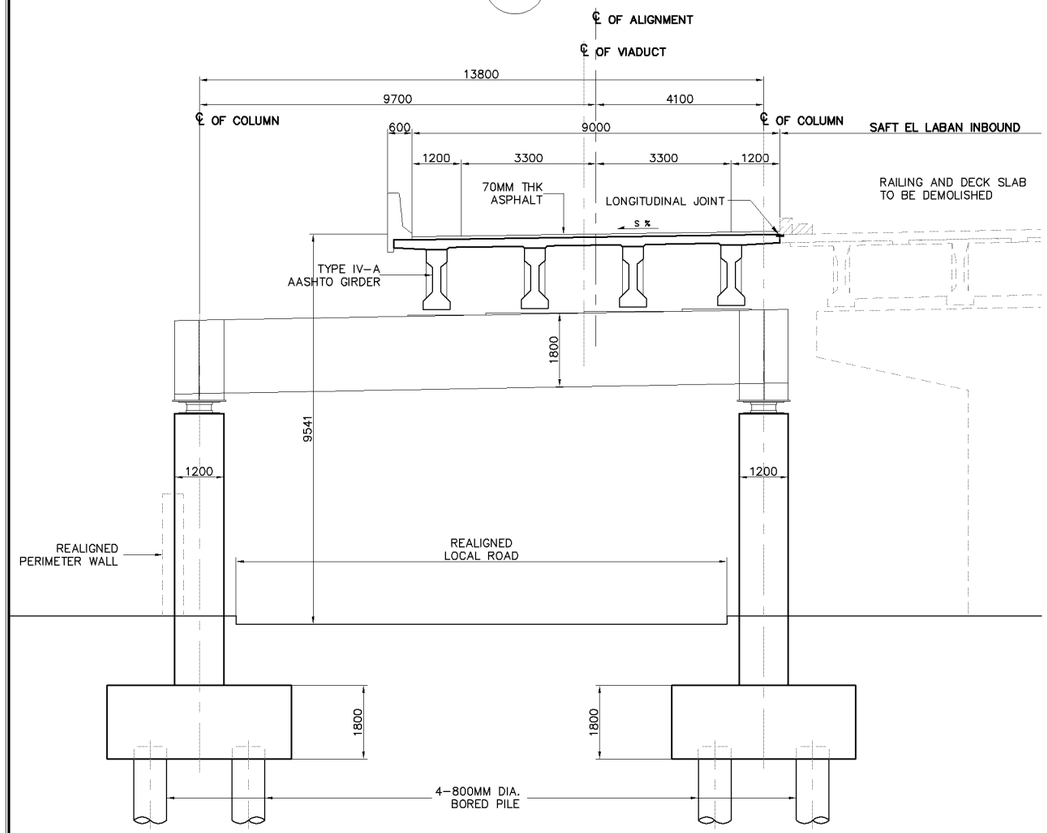

2 SCALE **TYPICAL PIER ELEVATION** 1:150

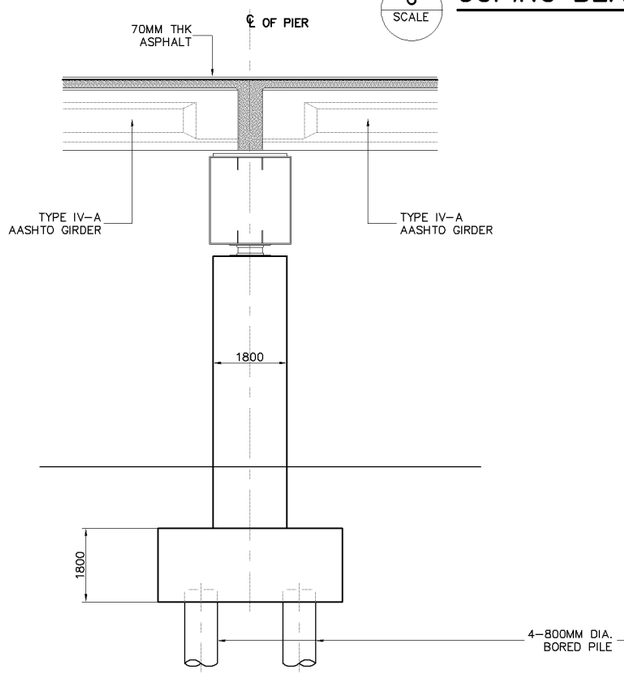

3 SCALE **SIDE ELEVATION (PIER P82) CONT.** 1:150

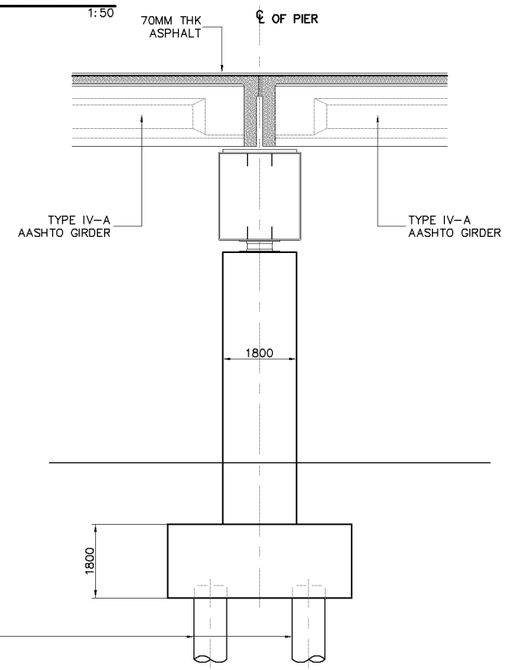

4 SCALE **SIDE ELEVATION (PIER P81) EXP.** 1:150

KATAHIRA & ENGINEERS INTERNATIONAL PRICE WATERHOUSE COOPERS ADVISORY CO., LTD.	JICA JAPAN INTERNATIONAL COOPERATION AGENCY	GENERAL AUTHORITY FOR ROADS BRIDGES AND LAND TRANSPORT (GARBLT) MINISTRY OF TRANSPORT ARAB REPUBLIC OF EGYPT	PROJECT AND LOCATION : FEASIBILITY STUDY ON HIGH PRIORITY URBAN TOLL EXPRESSWAYS IN CAIRO E1-2	SCALE : 1:150 1:50 FULL SIZE A3	DRAWING TITLE : VIADUCT INBOUND PIER LAYOUT & SECTIONS (PIERS P81 & P82), CONT. & EXP.	DRAWING NO : E1-2/S-35 SHEET NO : 35 / 48

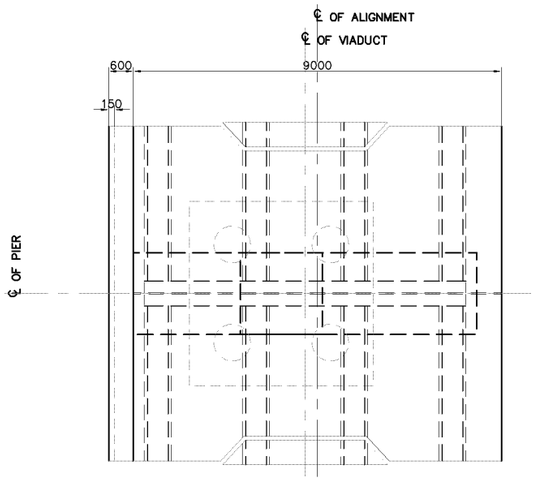

1 SCALE **PLAN** 1:150

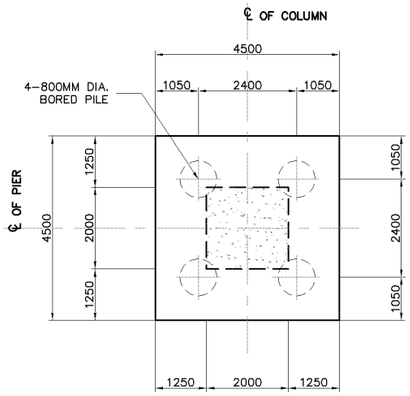

5 SCALE **PLAN ON PILE CAP** 1:150

SUMMARY OF QUANTITIES - 4 PIERS (P83-P86) CONT. & EXP.

DESCRIPTION	UNIT	QUANTITIES			
		PILE CAP	COLUMN	COPING	TOTAL
EARTH WORKS					
STRUCTURE EXCAVATION	CU.M.	324.00			324.00
STRUCTURE BACKFILL	CU.M.	162.00			162.00
STRUCTURE WORKS					
CAST IN PLACE BORED PILES (800mm Dia.)	M.	320.00			320.00
PILE LOAD TEST – STATIC (800mm Dia.)	NO.	4.00			4.00
STRUCTURAL CONCRETE Fcu = 450kg/cm2	CU.M.		114.00	134.00	248.00
STRUCTURAL CONCRETE Fcu = 300kg/cm2	CU.M.	162.00			162.00
REINFORCING STEEL BAR	M.T.	32.00	29.00	34.00	95.00

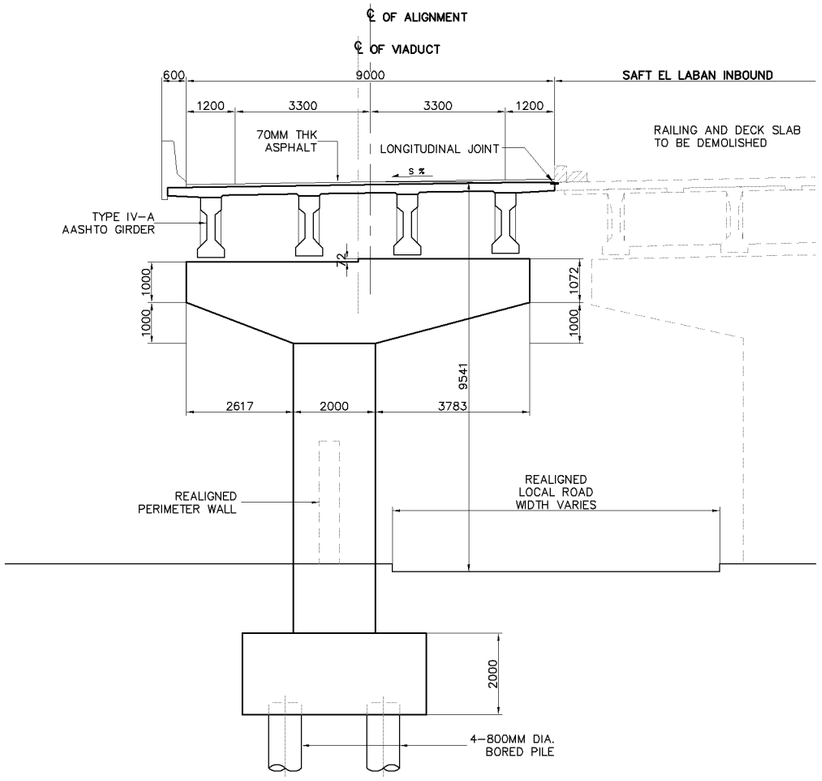

2 SCALE **TYPICAL PIER ELEVATION** 1:150

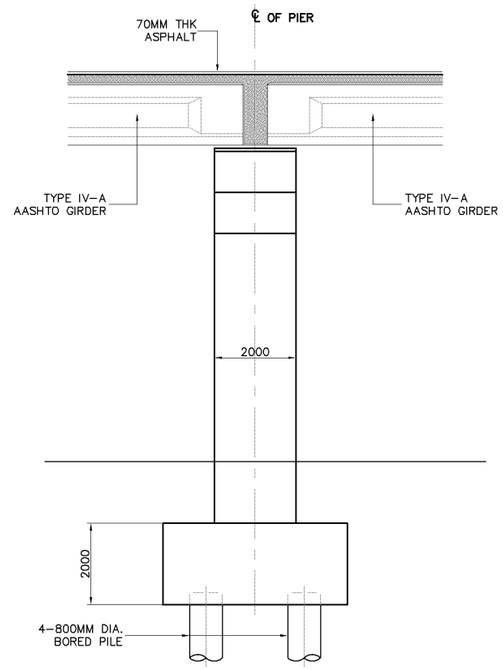

3 SCALE **SIDE ELEVATION (CONTINUOUS) PIERS (P83,P85 & P86)** 1:150

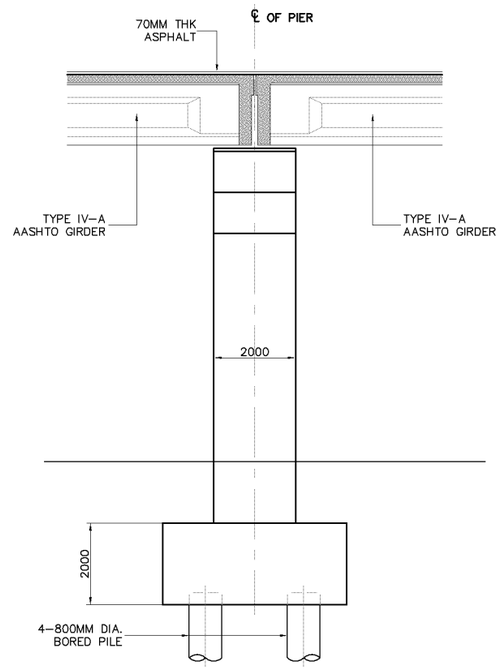

4 SCALE **SIDE ELEVATION (EXPANSION) PIER (P84)** 1:150

KATAHIRA & ENGINEERS INTERNATIONAL PRICE WATERHOUSE COOPERS ADVISORY CO., LTD.	JICA JAPAN INTERNATIONAL COOPERATION AGENCY	GENERAL AUTHORITY FOR ROADS BRIDGES AND LAND TRANSPORT (GARBLT) MINISTRY OF TRANSPORT ARAB REPUBLIC OF EGYPT	PROJECT AND LOCATION : FEASIBILITY STUDY ON HIGH PRIORITY URBAN TOLL EXPRESSWAYS IN CAIRO E1-2	SCALE : 1:150 FULL SIZE A3	DRAWING TITLE : VIADUCT INBOUND PIER LAYOUT & SECTIONS (PIERS (P83 & P86)), CONT. & EXP.	DRAWING NO : E1-2/S-36 SHEET NO : 36 / 48

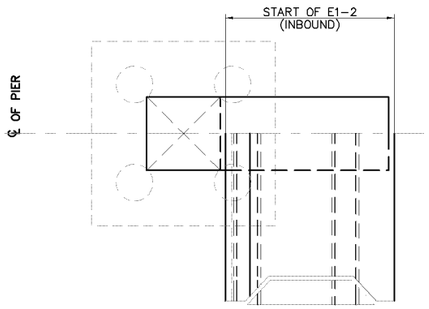

1 SCALE **P L A N** 1:150

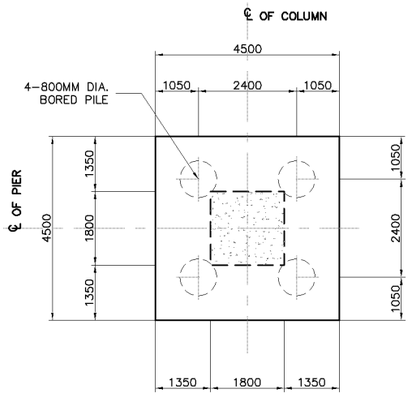

5 SCALE **PLAN ON PILE CAP** 1:150

SUMMARY OF QUANTITIES - 1 PIER (P87)

D E S C R I P T I O N	UNIT	Q U A N T I T I E S			
		PILE CAP	COLUMN	COPING	TOTAL
EARTH WORKS					
STRUCTURE EXCAVATION	CU.M.	81.00			81.00
STRUCTURE BACKFILL	CU.M.	41.00			41.00
STRUCTURE WORKS					
CAST IN PLACE BORED PILES (800mm Dia.)	M.	80.00			80.00
PILE LOAD TEST – STATIC (800mm Dia.)	NO.	1.00			1.00
STRUCTURAL CONCRETE Fcu = 450kg/cm2	CU.M.		24.00	17.00	41.00
STRUCTURAL CONCRETE Fcu = 300kg/cm2	CU.M.	41.00			41.00
REINFORCING STEEL BAR	M.T.	8.00	6.00	4.00	18.00

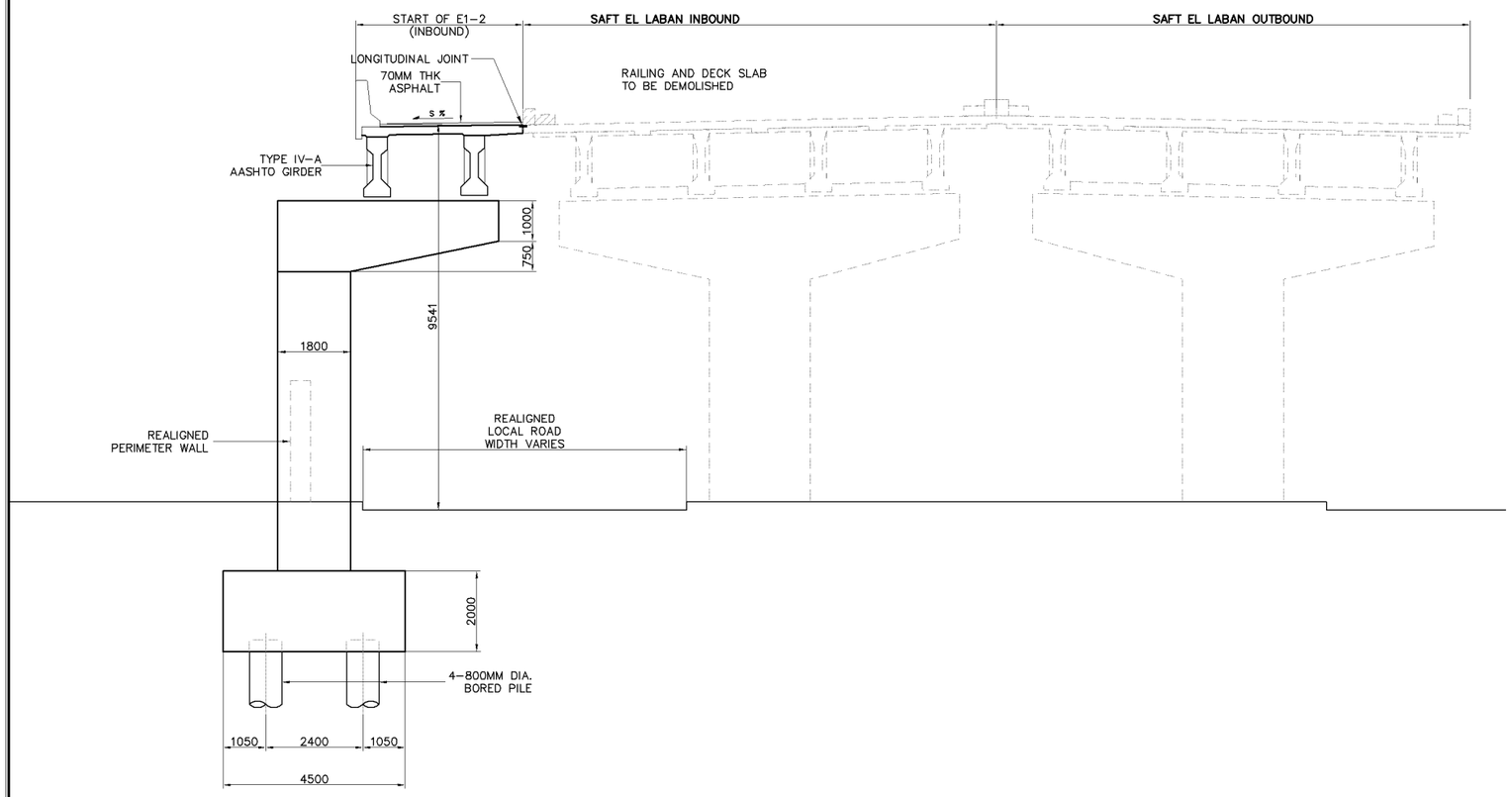

2 SCALE **TYPICAL PIER ELEVATION** 1:150

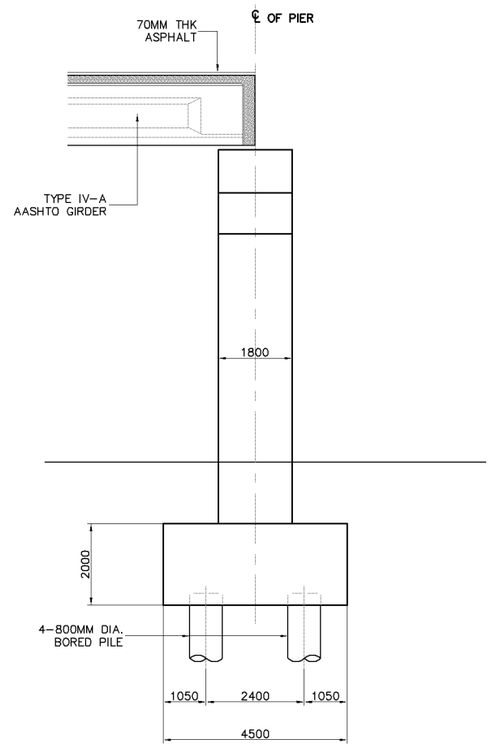

3 SCALE **SIDE ELEVATION** 1:150

KATAHIRA & ENGINEERS INTERNATIONAL PRICE WATERHOUSE COOPERS ADVISORY CO., LTD.	JICA JAPAN INTERNATIONAL COOPERATION AGENCY	GENERAL AUTHORITY FOR ROADS BRIDGES AND LAND TRANSPORT (GARBLT) MINISTRY OF TRANSPORT ARAB REPUBLIC OF EGYPT	PROJECT AND LOCATION : FEASIBILITY STUDY ON HIGH PRIORITY URBAN TOLL EXPRESSWAYS IN CAIRO E1-2	SCALE : 1:150 FULL SIZE A3	DRAWING TITLE : VIADUCT INBOUND PIER LAYOUT & SECTIONS PIER (P87)	DRAWING NO : E1-2/S-37 SHEET NO : 37 / 48

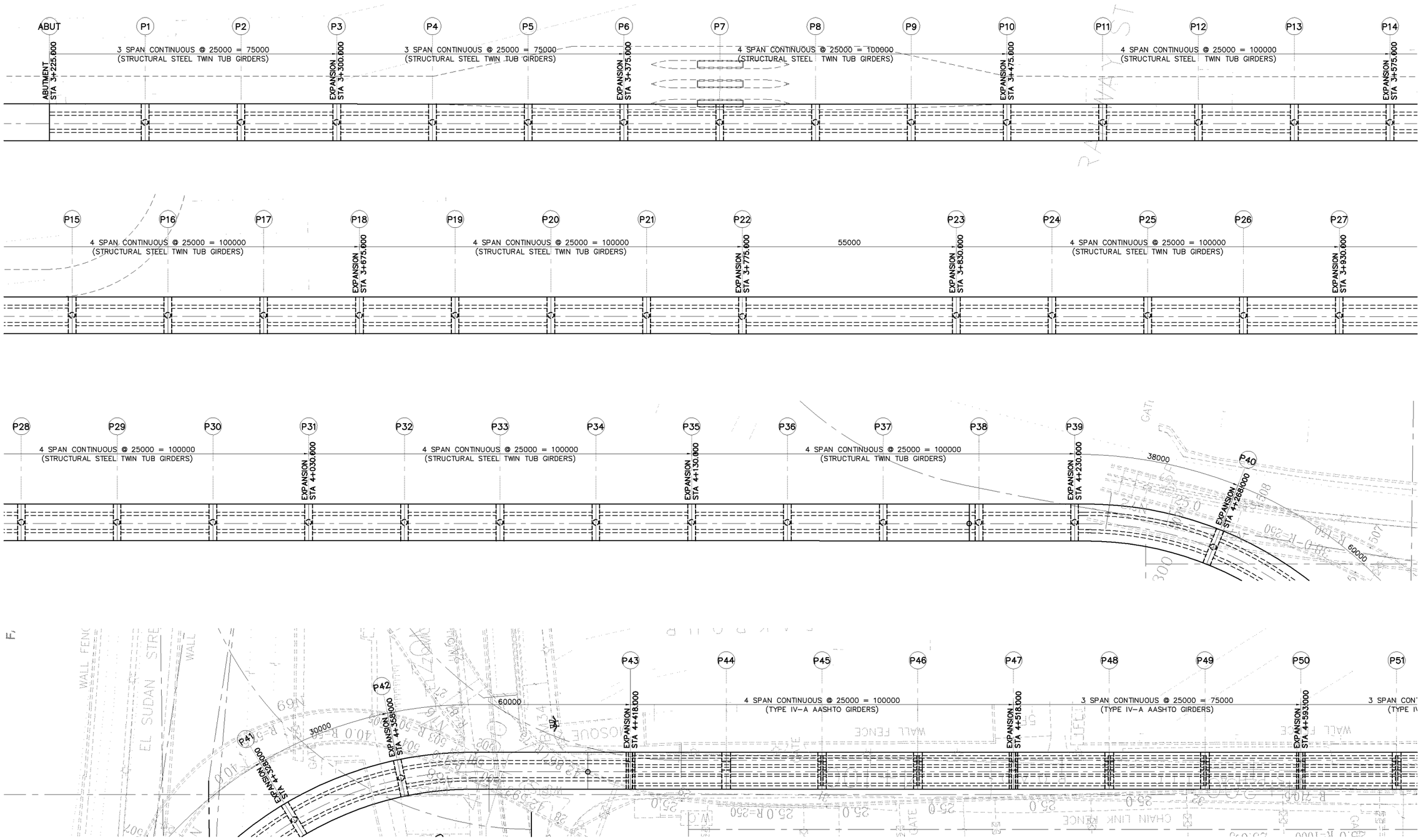

A SCALE

SUPERSTRUCTURE LAYOUT PLAN (ABUTMENT TO PIER 51)

1:1000

KATAHIRA & ENGINEERS INTERNATIONAL PRICE WATERHOUSE COOPERS ADVISORY CO., LTD.	JICA JAPAN INTERNATIONAL COOPERATION AGENCY	GENERAL AUTHORITY FOR ROADS BRIDGES AND LAND TRANSPORT (GARBLT) MINISTRY OF TRANSPORT ARAB REPUBLIC OF EGYPT	PROJECT AND LOCATION : FEASIBILITY STUDY ON HIGH PRIORITY URBAN TOLL EXPRESSWAYS IN CAIRO E1-2	SCALE : 1:1000 FULL SIZE A3	DRAWING TITLE : VIADUCT INBOUND SUPERSTRUCTURE LAYOUT & SECTIONS (ABUT. TO P51), 1 OF 3	DRAWING NO : E1-2/S-38 SHEET NO : 38 / 48

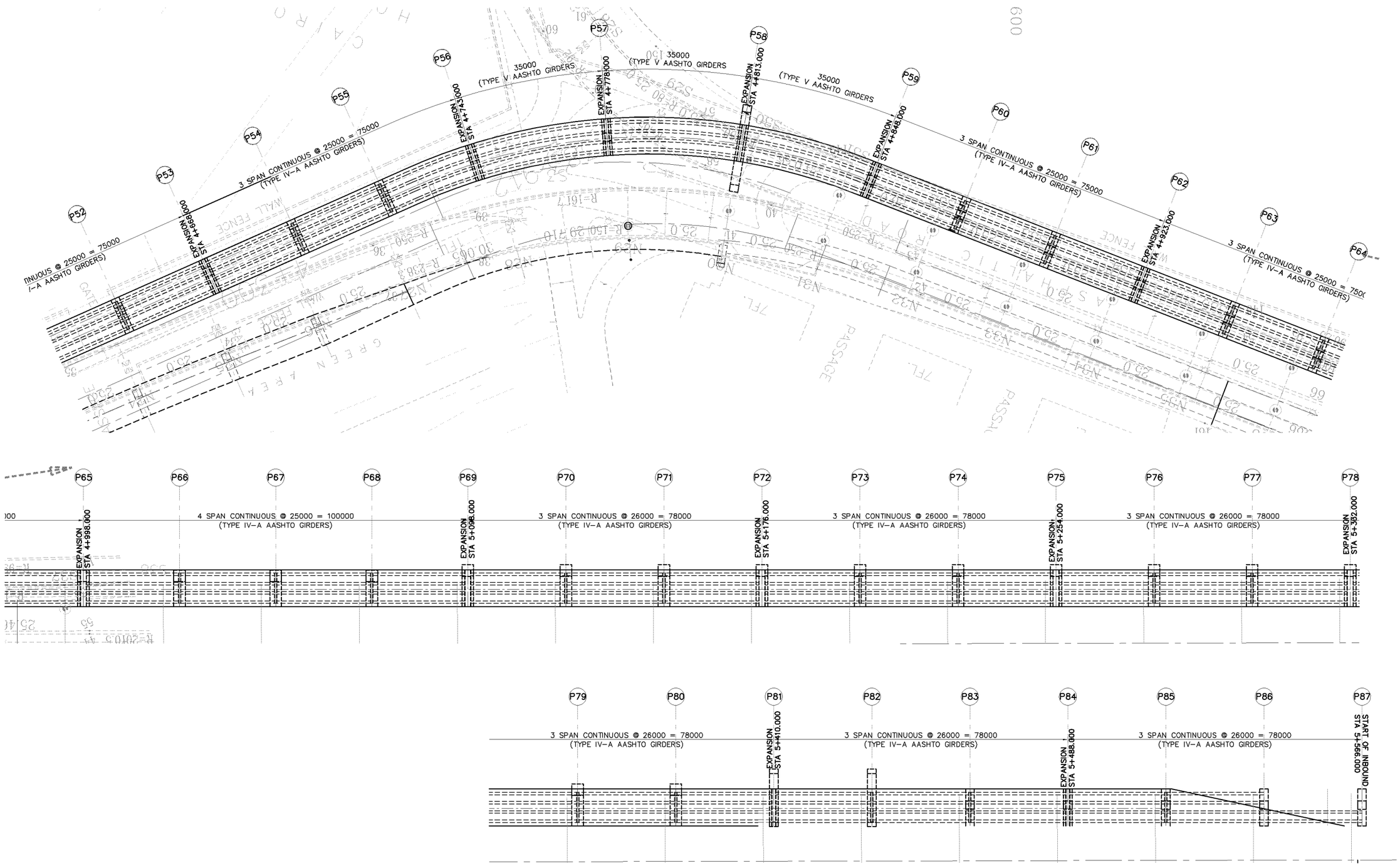

A SCALE

SUPERSTRUCTURE LAYOUT PLAN (PIER 52 TO PIER 85)

1:1000

KATAHIRA & ENGINEERS INTERNATIONAL PRICE WATERHOUSE COOPERS ADVISORY CO., LTD.	JICA JAPAN INTERNATIONAL COOPERATION AGENCY	GENERAL AUTHORITY FOR ROADS BRIDGES AND LAND TRANSPORT (GARBLT) MINISTRY OF TRANSPORT ARAB REPUBLIC OF EGYPT	PROJECT AND LOCATION : FEASIBILITY STUDY ON HIGH PRIORITY URBAN TOLL EXPRESSWAYS IN CAIRO E1-2	SCALE : 1:1000 FULL SIZE A3	DRAWING TITLE : VIADUCT INBOUND SUPERSTRUCTURE LAYOUT & SECTIONS (P52 TO P87), 2 OF 3	DRAWING NO : E1-2/S-39 SHEET NO : 39 / 48

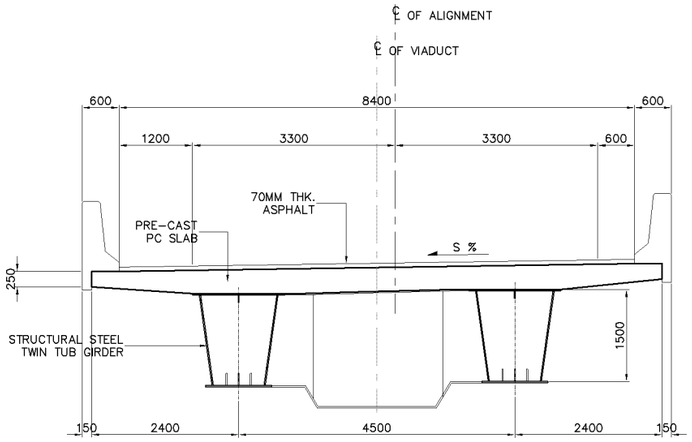

2 SCALE

TYPICAL SECTION @ PIER SUPPORT (STEEL TUB GIRDER)

1:100

SUMMARY OF QUANTITIES - SUPERSTRUCTURE (LENGTH = 2,341.00 M.)

DESCRIPTION	UNIT	QUANTITIES			
		PCDG	SS GIRDER	DECK	TOTAL
STRUCTURE WORKS					
STRUCTURAL STEEL	M.T.		2067.00		2067.00
STRUCTURAL CONCRETE Fcu = 300kg/cm2	CU.M.			2841.00	2841.00
STRUCTURAL CONCRETE Fcu = 450kg/cm2	CU.M.	2668.00		4595.00	7263.00
REINFORCING BARS	M.T.	534.00		2602.00	3136.00
PRESTRESSING STEEL	M.T.	107.00		184.00	291.00
EXPANSION JOINT	M.			288.00	288.00
BRIDGE RIALING	M.			4663.00	4663.00
DECK WATERPROOFING	SQ.M.			11092.00	11092.00
ASPHALT	CU.M.			1518.00	1518.00

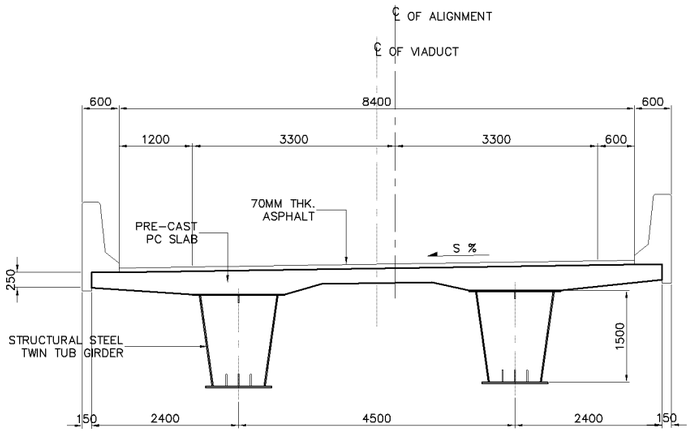

1 SCALE

TYPICAL SECTION IN SPAN (STEEL TUB GIRDER)

1:100

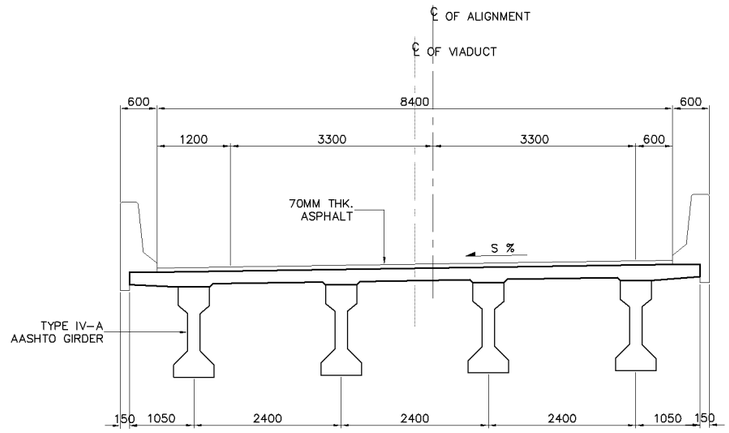

3 SCALE

TYPICAL SECTION IN SPAN (TYPE IV-A AASHTO GIRDER)

1:100

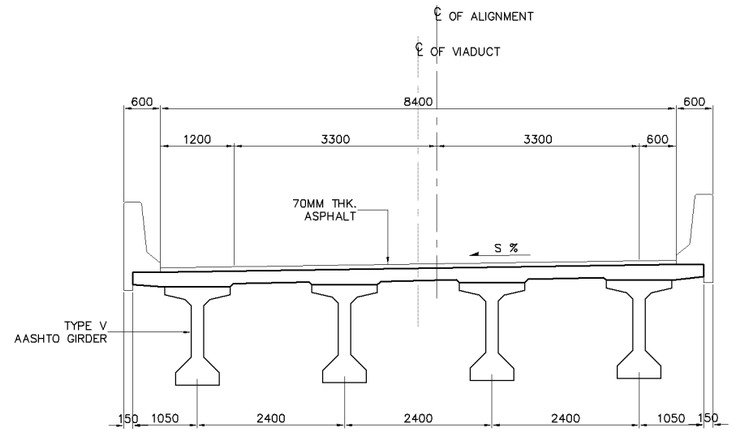

4 SCALE

TYPICAL SECTION IN SPAN (TYPE V AASHTO GIRDER)

1:100

KATAHIRA & ENGINEERS INTERNATIONAL PRICE WATERHOUSE COOPERS ADVISORY CO., LTD.	JICA JAPAN INTERNATIONAL COOPERATION AGENCY	GENERAL AUTHORITY FOR ROADS BRIDGES AND LAND TRANSPORT (GARBLT) MINISTRY OF TRANSPORT ARAB REPUBLIC OF EGYPT	PROJECT AND LOCATION : FEASIBILITY STUDY ON HIGH PRIORITY URBAN TOLL EXPRESSWAYS IN CAIRO E1-2	SCALE : 1:100 FULL SIZE A3	DRAWING TITLE : VIADUCT INBOUND SUPERSTRUCTURE LAYOUT & SECTIONS 3 OF 3	DRAWING NO : E1-2/S-40 SHEET NO : 40 / 48

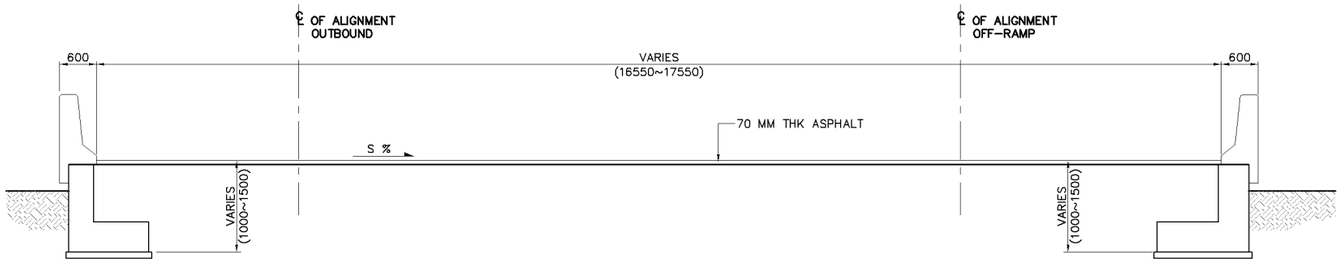

STUB WALL

1 SCALE — TYPICAL SECTION – STA.3+580.000 TO STA. 3+590.000

1:100

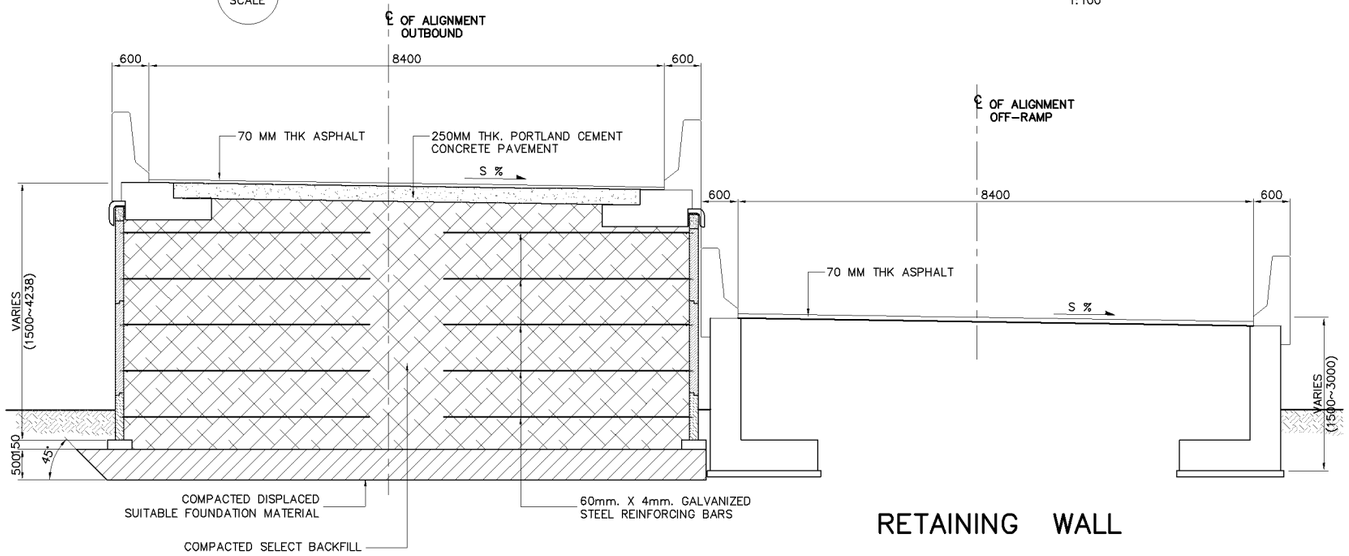

RETAINING WALL

MECHANICALLY STABILIZED EARTH WALL (MSE)

2 SCALE — TYPICAL SECTION – STA.3+590.000 TO STA. 3+668.500

1:100

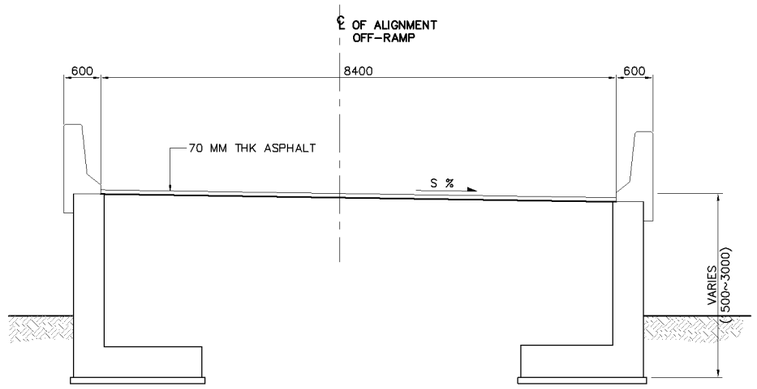

RETAINING WALL

3 SCALE — TYPICAL SECTION – STA.3+600.000 TO STA. 3+735.000

1:100

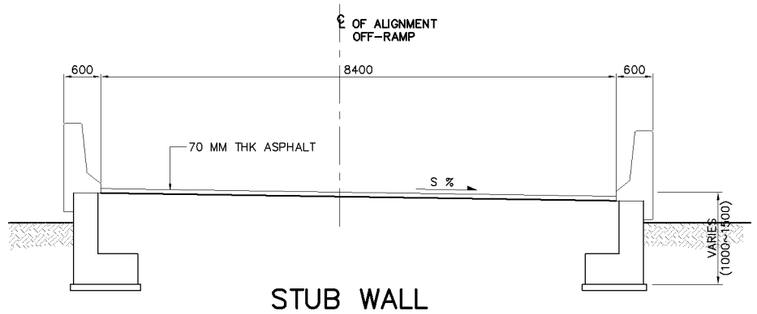

STUB WALL

4 SCALE — TYPICAL SECTION – STA.3+735.000 TO STA. 3+800.000

1:100

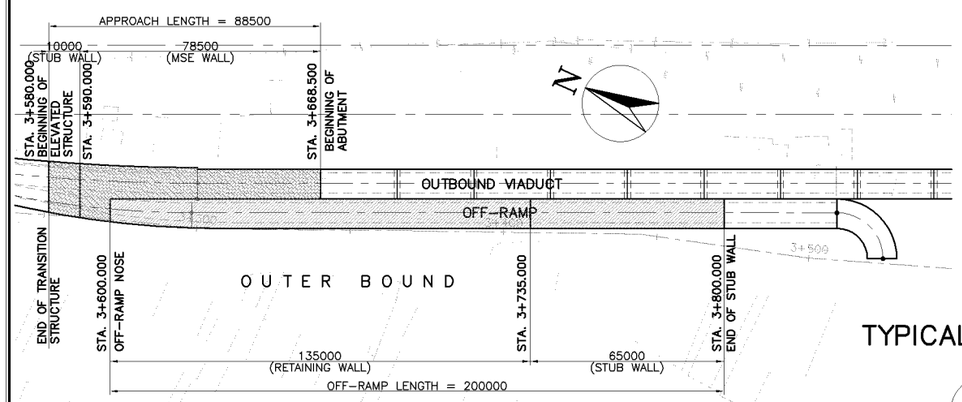

A SCALE — PLAN LAYOUT OFF-RAMP / VIADUCT APPROACH RAMP

1:2000

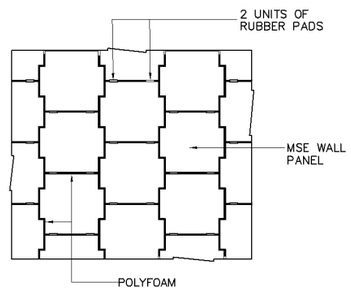

TYPICAL MSE WALL PANEL LAYOUT

5 SCALE — TYPICAL DETAIL

NTS

SUMMARY OF QUANTITIES - APPROACH EMBANKMENT (LENGTH=88.50M.) OFF-RAMP EMBANKMENT (LENGTH=200.00M.)

DESCRIPTION	UNIT	QUANTITIES			
		STUB WALL	MSE	RET. WALL	TOTAL
EARTH WORKS					
STRUCTURE EXCAVATION	CU.M.	798.00	902.00	2065.00	3765.00
FOUNDATION FILL	CU.M.	1197.00	376.00	6196.00	7768.00
SELECTED BACKFILL FOR MSE WALL	CU.M.		3683.00		3683.00
MECHANICALLY STABILIZED EARTHWALL	SQ.M.		767.00		767.00
STRUCTURE WORKS					
STRUCTURAL CONCRETE Fcu=300 kg/cm2	CU.M.	220.00	113.00	1087.00	1420.00
REINFORCING BARS	M.T.	33.00	17.00	163.00	213.00
PCCP	CU.M.		164.00		164.00
ASPHALT	CU.M.	56.00	46.00	126.00	228.00
BASE COURSE	CU.M.	355.00		904.00	1258.00

KATAHIRA & ENGINEERS INTERNATIONAL
PRICE WATERHOUSE COOPERS ADVISORY CO., LTD.

JICA
JAPAN INTERNATIONAL COOPERATION AGENCY

GENERAL AUTHORITY FOR ROADS BRIDGES AND LAND TRANSPORT (GARBLT)
MINISTRY OF TRANSPORT
ARAB REPUBLIC OF EGYPT

PROJECT AND LOCATION : FEASIBILITY STUDY ON HIGH PRIORITY URBAN TOLL EXPRESSWAYS IN CAIRO E1-2

SCALE : 1:2000 1:100 FULL SIZE A3

DRAWING TITLE : OFF-RAMP / VIADUCT - OUTBOUND APPROACH EMBANKMENT LAYOUT STUB WALL AND RETAINING WALL DETAIL

DRAWING NO : E1-2/S-41

SHEET NO : 41 / 48

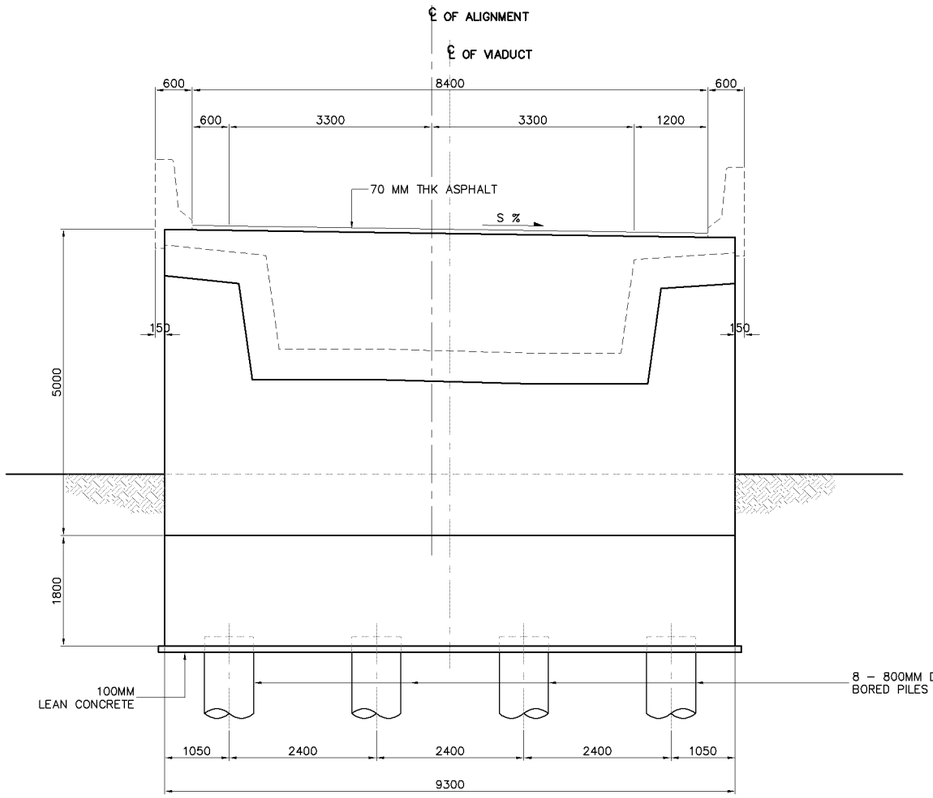

1 SCALE **FRONT ELEVATION** 1:100

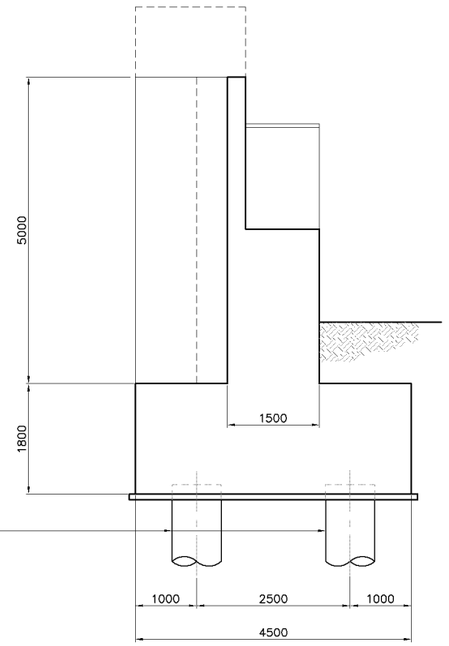

2 SCALE **SIDE ELEVATION** 1:100

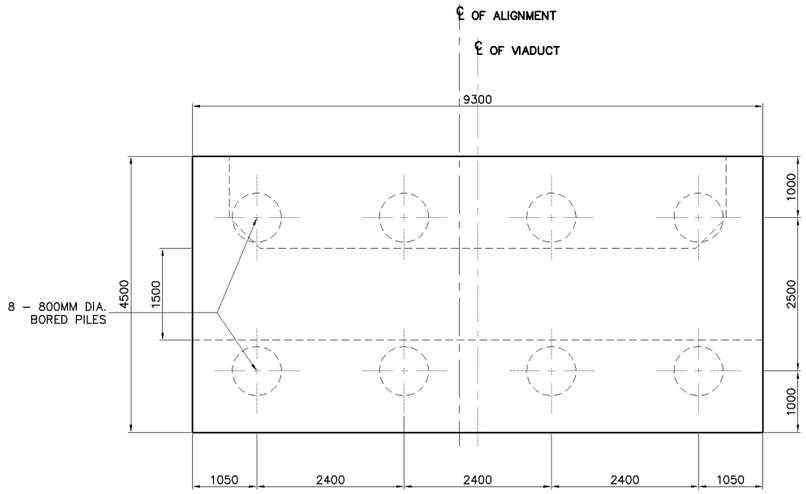

3 SCALE **PLAN ON PILE CAP** 1:100

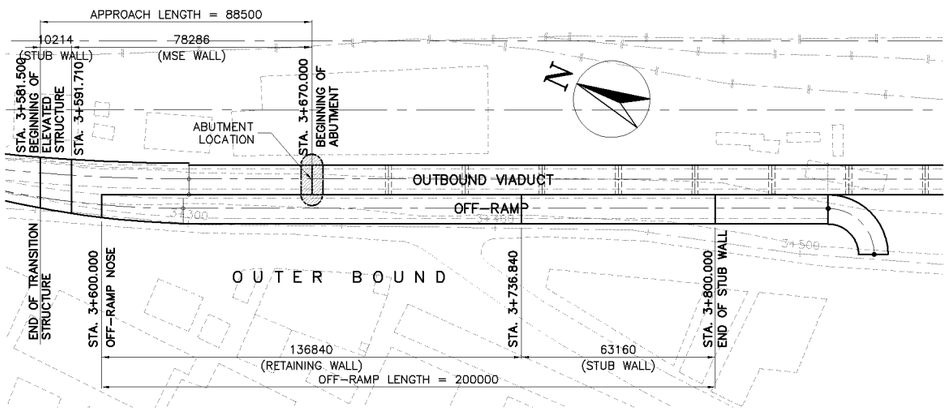

SUMMARY OF QUANTITIES - ABUTMENT

DESCRIPTION	UNIT	QUANTITIES		
		PILE CAP	ABUTMENT	TOTAL
EARTH WORKS				
STRUCTURE EXCAVATION	CU.M.	117.00		117.00
STRUCTURE BACKFILL	CU.M.	84.00		84.00
STRUCTURE WORKS				
CAST IN PLACE BORED PILES (800mm Dia.)	CU.M.	160.00		160.00
PILE LOAD TEST – STATIC (800mm Dia.)	NO.	1.00		1.00
STRUCTURAL CONCRETE Fcu = 300kg/cm2	CU.M.	42.00	75.00	117.00
REINFORCING STEEL BAR	M.T.	8.00	15.00	23.00

KATAHIRA & ENGINEERS INTERNATIONAL
PRICE WATERHOUSE COOPERS ADVISORY CO., LTD.

JICA
JAPAN INTERNATIONAL COOPERATION AGENCY

GENERAL AUTHORITY FOR ROADS BRIDGES AND LAND TRANSPORT (GARBLT)
MINISTRY OF TRANSPORT
ARAB REPUBLIC OF EGYPT

PROJECT AND LOCATION : FEASIBILITY STUDY ON HIGH PRIORITY URBAN TOLL EXPRESSWAYS IN CAIRO E1-2

SCALE : 1:2000 1:150 1:200 FULL SIZE A3

DRAWING TITLE : VIADUCT OUTBOUND ABUTMENT LAYOUT & SECTIONS (STA. 3+670.000)

DRAWING NO : E1-2/S-42

SHEET NO : 42 / 48

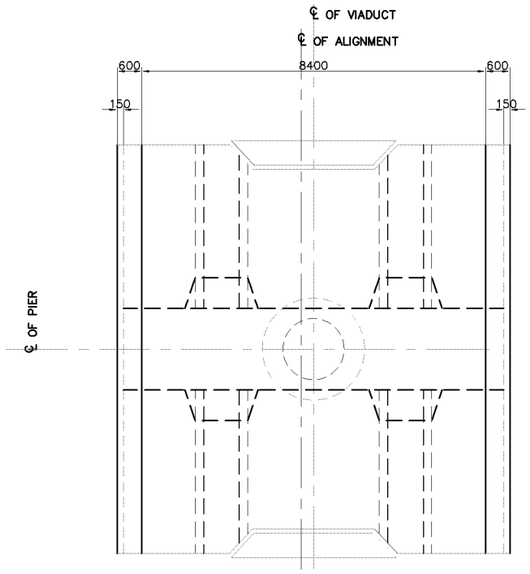

1 SCALE **PLAN** 1:150

SUMMARY OF QUANTITIES - 27 PIERS (CONTINUOUS & EXPANSION)

DESCRIPTION	UNIT	QUANTITIES		
		BORED PILE	COLUMN	TOTAL
EARTH WORKS				
STRUCTURE EXCAVATION	CU.M.			
FOUNDATION FILL	CU.M.			
STRUCTURE WORKS				
CAST IN PLACE BORED PILES (2500mm Dia.)	L.M.	540.00		540.00
PILE LOAD TEST – STATIC (2500mm Dia.)	NO.	27.00		27.00
STRUCTURAL CONCRETE Fcu = 450kg/cm2	CU.M.		545.00	545.00
COMPOSITE STEEL (19MM THK.)	M.T.	753.00	257.00	1010.00
REINFORCING STEEL BAR	M.T.		136.00	136.00
STRUCTURAL STEEL	M.T.		388.00	388.00

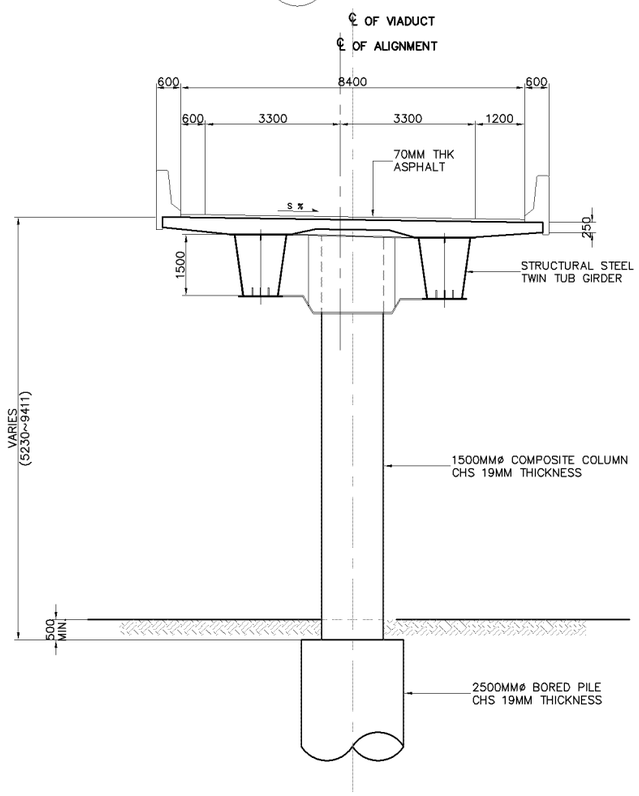

2 SCALE **TYPICAL PIER ELEVATION** 1:150

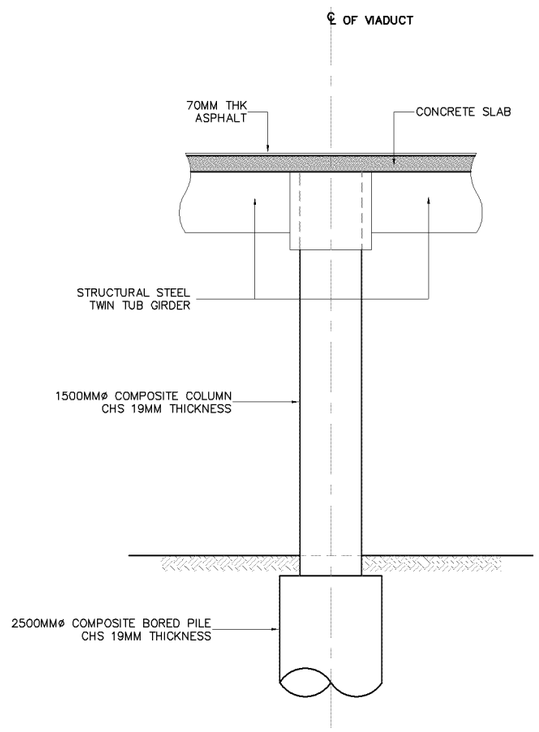

3 SCALE **SIDE ELEVATION** 1:150

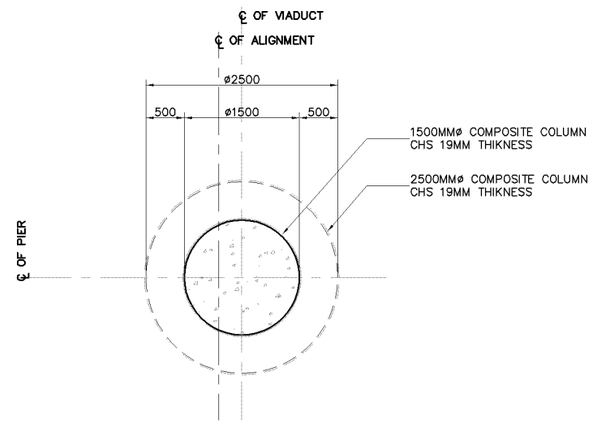

3 SCALE **COLUMN SECTION** 1:80

KATAHIRA & ENGINEERS INTERNATIONAL PRICE WATERHOUSE COOPERS ADVISORY CO., LTD.	JICA JAPAN INTERNATIONAL COOPERATION AGENCY	GENERAL AUTHORITY FOR ROADS BRIDGES AND LAND TRANSPORT (GARBLT) MINISTRY OF TRANSPORT ARAB REPUBLIC OF EGYPT	PROJECT AND LOCATION : FEASIBILITY STUDY ON HIGH PRIORITY URBAN TOLL EXPRESSWAYS IN CAIRO E1-2	SCALE : 1:150 1:80 1:200 FULL SIZE A3	DRAWING TITLE : VIADUCT OUTBOUND PIER LAYOUT & SECTIONS (CONT. & EXP.) PIERS (P1-P27)	DRAWING NO : E1-2/S-43 SHEET NO : 43 / 48

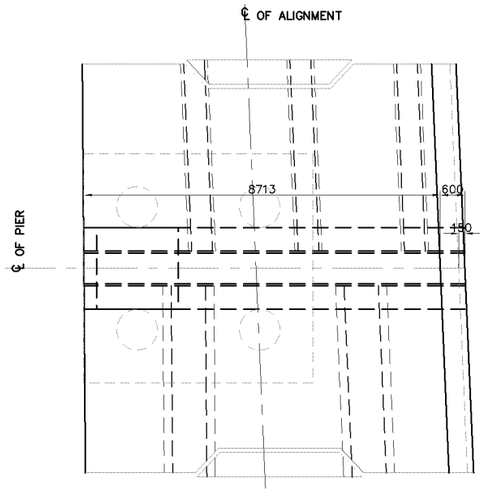

2 SCALE **P L A N** 1:150

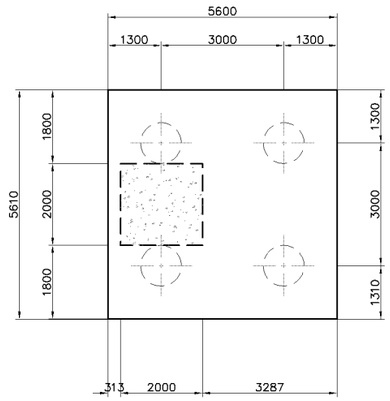

2 SCALE **PLAN ON PILE CAP** 1:150

SUMMARY OF QUANTITIES - 1 PIER

DESCRIPTION	UNIT	QUANTITIES			
		PILE CAP	COLUMN	COPING	TOTAL
EARTH WORKS					
STRUCTURE EXCAVATION	CU.M.	125.00			125.00
STRUCTURE BACKFILL	CU.M.	63.00			63.00
STRUCTURE WORKS					
CAST IN PLACE BORED PILES (1000mm Dia.)	M.	80.00			80.00
PILE LOAD TEST – STATIC (1000mm Dia.)	NO.	1.00			1.00
STRUCTURAL CONCRETE Fcu = 450kg/cm2	CU.M.		28.00	42.00	70.00
STRUCTURAL CONCRETE Fcu = 300kg/cm2	CU.M.	63.00			63.00
REINFORCING STEEL BAR	M.T.	13.00	7.00	11.00	31.00

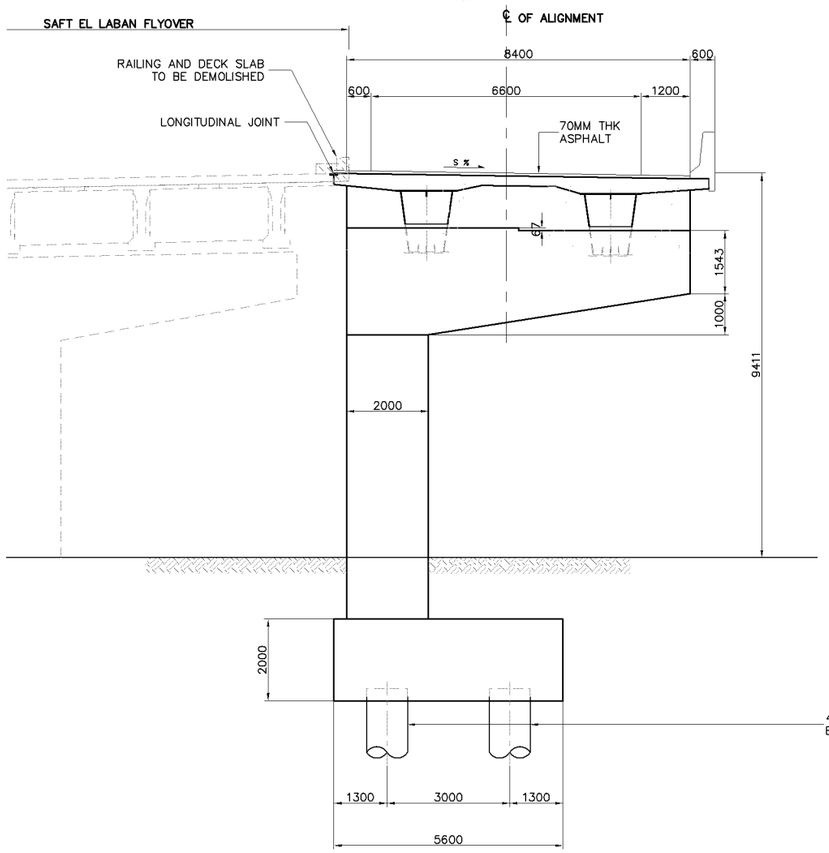

2 SCALE **TYPICAL PIER ELEVATION** 1:150

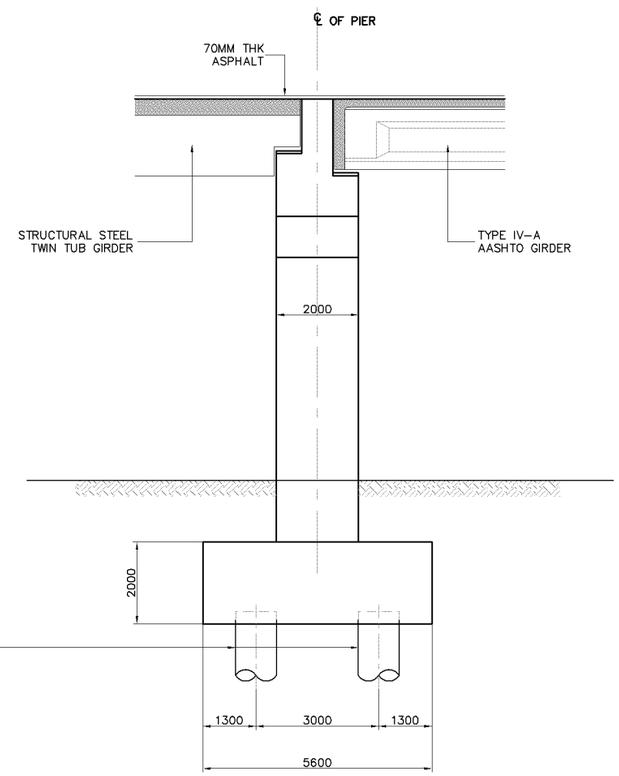

2 SCALE **SIDE ELEVATION** 1:150

KATAHIRA & ENGINEERS INTERNATIONAL PRICE WATERHOUSE COOPERS ADVISORY CO., LTD.	JICA JAPAN INTERNATIONAL COOPERATION AGENCY	GENERAL AUTHORITY FOR ROADS BRIDGES AND LAND TRANSPORT (GARBLT) MINISTRY OF TRANSPORT ARAB REPUBLIC OF EGYPT	PROJECT AND LOCATION : FEASIBILITY STUDY ON HIGH PRIORITY URBAN TOLL EXPRESSWAYS IN CAIRO E1-2	SCALE : 1:150 FULL SIZE A3	DRAWING TITLE : VIADUCT OUTBOUND PIER LAYOUT & SECTIONS (PIER (P28)) (STA. 4+358.650)	DRAWING NO : E1-2/S-44 SHEET NO : 44 / 48

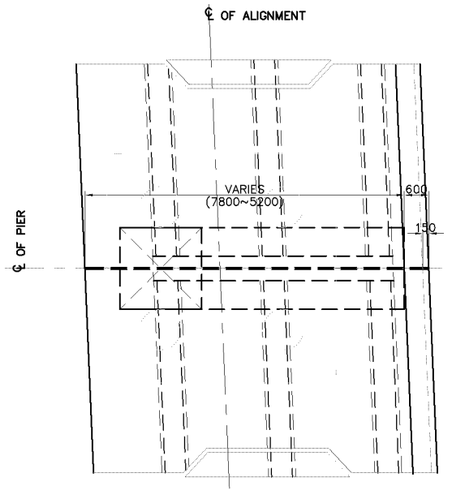

1 SCALE **P L A N** 1:150

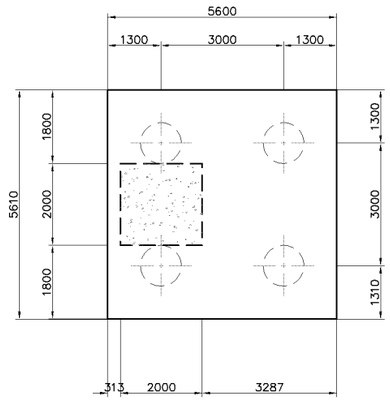

5 SCALE **PLAN ON PILE CAP** 1:150

SUMMARY OF QUANTITIES - 12 PIERS (CONTINUOUS & EXPANSION)

D E S C R I P T I O N	UNIT	Q U A N T I T I E S			
		PILE CAP	COLUMN	COPING	TOTAL
EARTH WORKS					
STRUCTURE EXCAVATION	CU.M.	1254.00			1254.00
STRUCTURE BACKFILL	CU.M.	627.00			627.00
STRUCTURE WORKS					
CAST IN PLACE BORED PILES (1000mm Dia.)	M.	800.00			800.00
PILE LOAD TEST – STATIC (1000mm Dia.)	NO.	10.00			10.00
STRUCTURAL CONCRETE Fcu = 450kg/cm2	CU.M.		261.00	280.00	541.00
STRUCTURAL CONCRETE Fcu = 300kg/cm2	CU.M.	627.00			627.00
REINFORCING STEEL BAR	M.T.	125.00	65.00	70.00	260.00

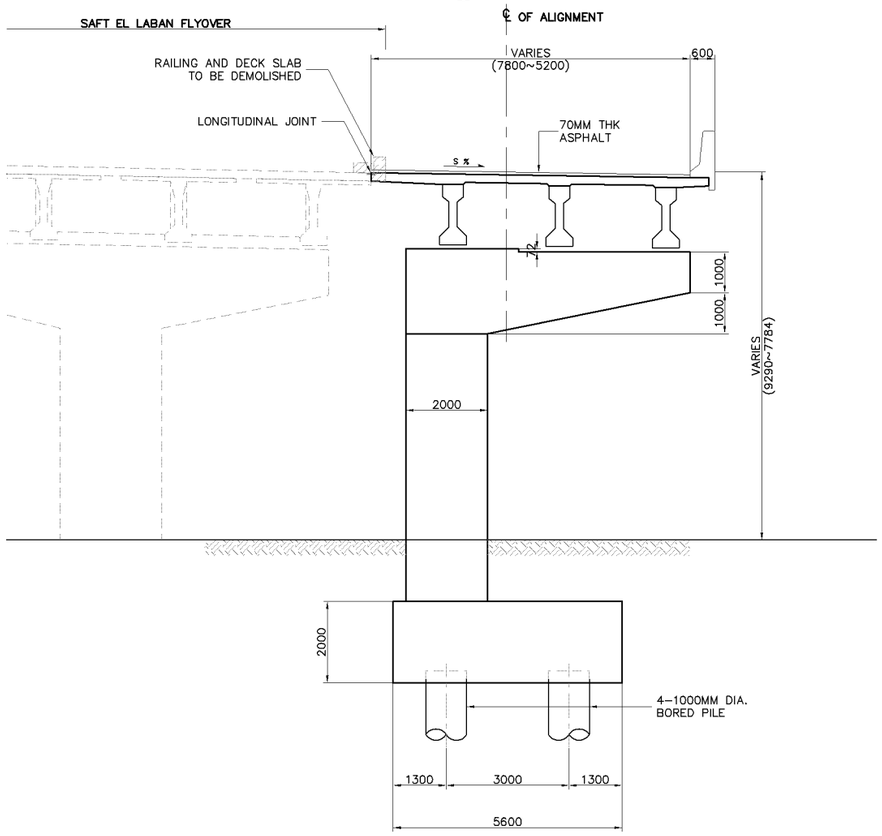

2 SCALE **TYPICAL PIER ELEVATION** 1:150

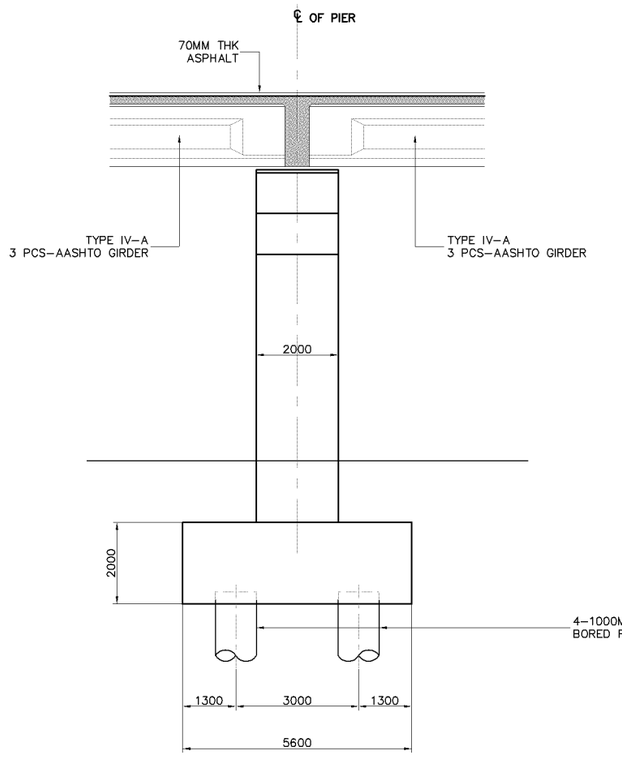

3 SCALE **SIDE ELEVATION (CONTINUOUS) PIERS (P29–P30,P32–P33,P35–P37 & P39–P40)** 1:150

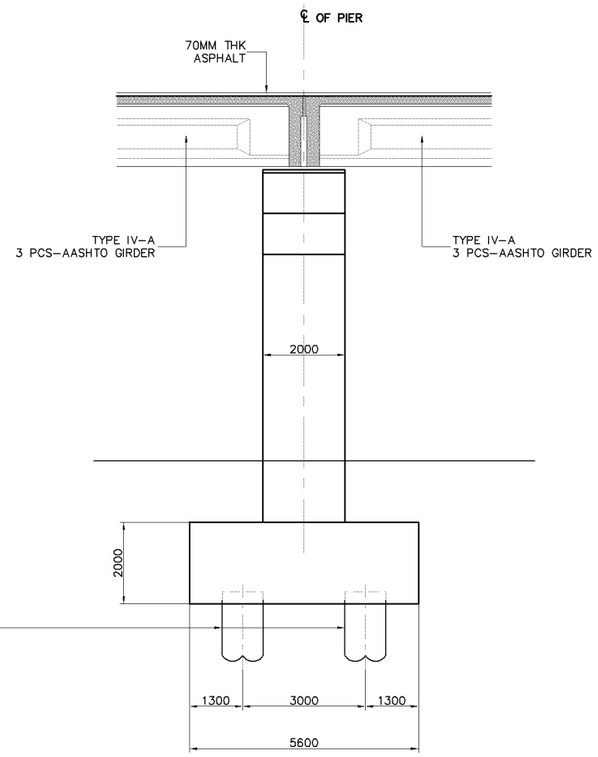

4 SCALE **SIDE ELEVATION (EXPANSION) PIERS (P31, P34 & P38)** 1:150

KATAHIRA & ENGINEERS INTERNATIONAL PRICE WATERHOUSE COOPERS ADVISORY CO., LTD.	JICA JAPAN INTERNATIONAL COOPERATION AGENCY	GENERAL AUTHORITY FOR ROADS BRIDGES AND LAND TRANSPORT (GARBLT) MINISTRY OF TRANSPORT ARAB REPUBLIC OF EGYPT	PROJECT AND LOCATION : FEASIBILITY STUDY ON HIGH PRIORITY URBAN TOLL EXPRESSWAYS IN CAIRO E1-2	SCALE : 1:150 FULL SIZE A3	DRAWING TITLE : VIADUCT OUTBOUND PIER LAYOUT & SECTIONS (CONT. & EXP.) PIERS (P29-P40)	DRAWING NO : E1-2/S-45 SHEET NO : 45 / 48

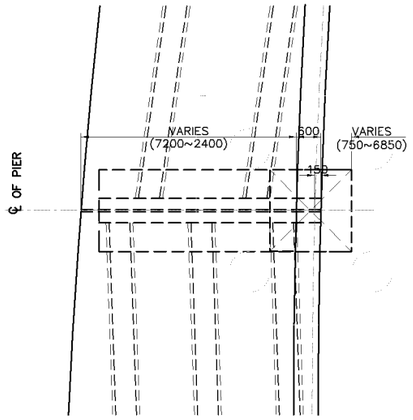

1 SCALE **P L A N** 1:150

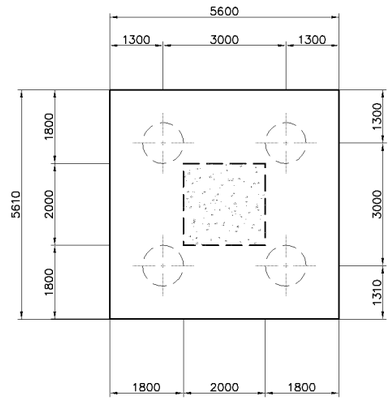

5 SCALE **PLAN ON PILE CAP** 1:150

SUMMARY OF QUANTITIES - 2 PIERS (CONTINUOUS & EXPANSION)

D E S C R I P T I O N	UNIT	Q U A N T I T I E S			
		PILE CAP	COLUMN	COPING	TOTAL
EARTH WORKS					
STRUCTURE EXCAVATION	CU.M.	502.00			502.00
STRUCTURE BACKFILL	CU.M.	251.00			251.00
STRUCTURE WORKS					
CAST IN PLACE BORED PILES (1000mm Dia.)	M.	320.00			320.00
PILE LOAD TEST – STATIC (1000mm Dia.)	NO.	4.00			4.00
STRUCTURAL CONCRETE Fcu = 450kg/cm2	CU.M.		93.00	135.00	228.00
STRUCTURAL CONCRETE Fcu = 300kg/cm2	CU.M.	251.00			251.00
REINFORCING STEEL BAR	M.T.	50.00	23.00	34.00	107.00

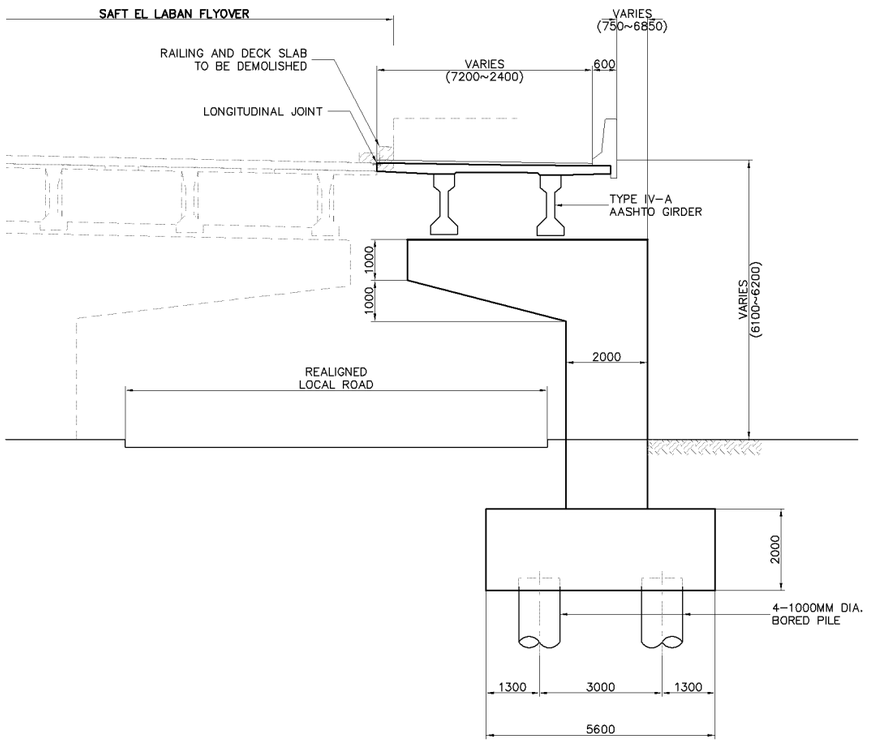

2 SCALE **TYPICAL PIER ELEVATION** 1:150

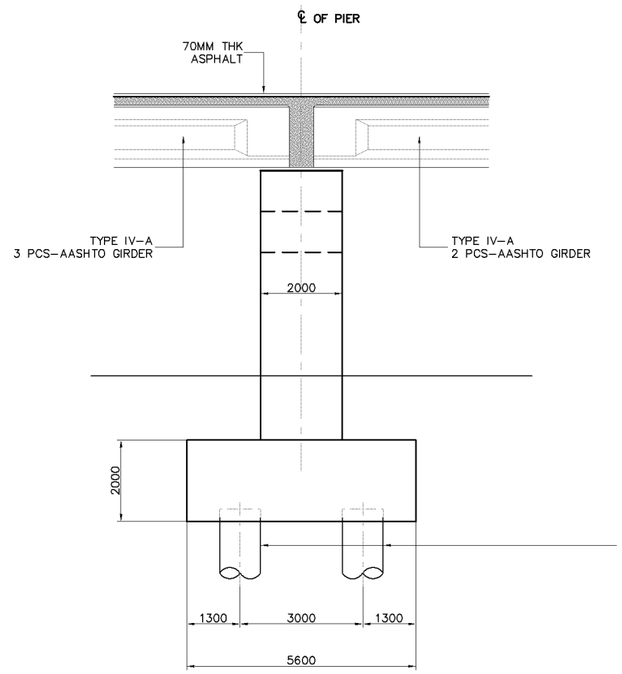

3 SCALE **SIDE ELEVATION (CONTINUOUS) PIER (P41)** 1:150

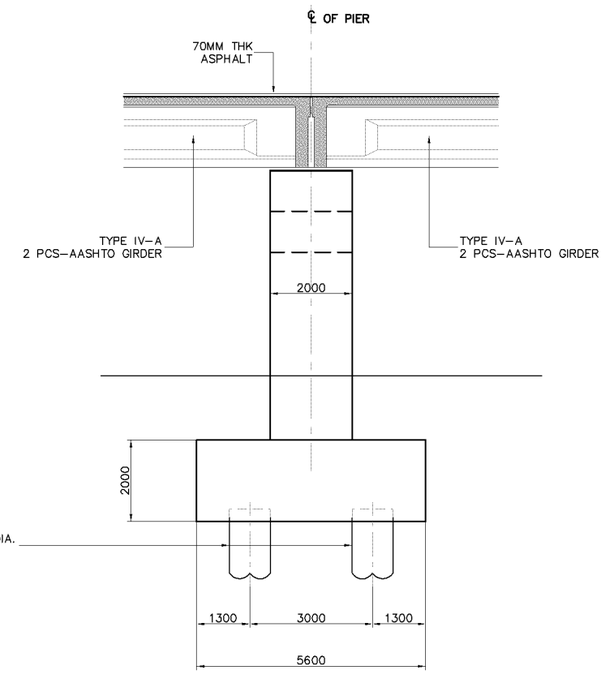

4 SCALE **SIDE ELEVATION (EXPANSION) PIER (P42)** 1:150

KATAHIRA & ENGINEERS INTERNATIONAL PRICE WATERHOUSE COOPERS ADVISORY CO., LTD.	JICA JAPAN INTERNATIONAL COOPERATION AGENCY	GENERAL AUTHORITY FOR ROADS BRIDGES AND LAND TRANSPORT (GARBLT) MINISTRY OF TRANSPORT ARAB REPUBLIC OF EGYPT	PROJECT AND LOCATION : FEASIBILITY STUDY ON HIGH PRIORITY URBAN TOLL EXPRESSWAYS IN CAIRO E1-2	SCALE : 1:150 FULL SIZE A3	DRAWING TITLE : VIADUCT OUTBOUND PIER LAYOUT & SECTIONS (CONT. & EXP.) PIERS (P41-P42)	DRAWING NO : E1-2/S-46 SHEET NO : 46 / 48

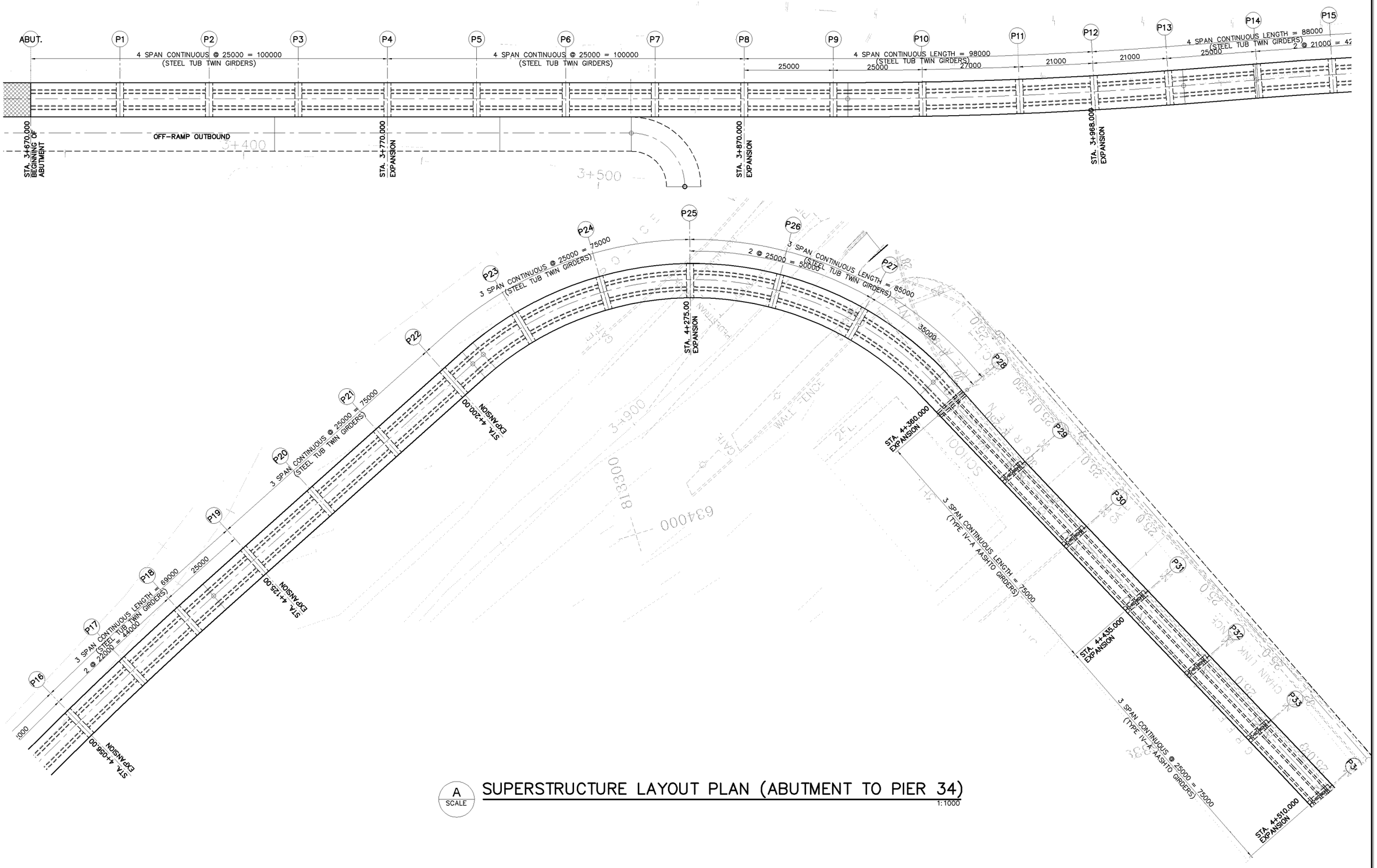

A
SCALE

SUPERSTRUCTURE LAYOUT PLAN (ABUTMENT TO PIER 34)

1:1000

KATAHIRA & ENGINEERS INTERNATIONAL PRICE WATERHOUSE COOPERS ADVISORY CO., LTD.	JICA JAPAN INTERNATIONAL COOPERATION AGENCY	GENERAL AUTHORITY FOR ROADS BRIDGES AND LAND TRANSPORT (GARBLT) MINISTRY OF TRANSPORT ARAB REPUBLIC OF EGYPT	PROJECT AND LOCATION : FEASIBILITY STUDY ON HIGH PRIORITY URBAN TOLL EXPRESSWAYS IN CAIRO E1-2	SCALE : 1:1000 FULL SIZE A3	DRAWING TITLE : VIADUCT OUTBOUND SUPERSTRUCTURE LAYOUT & SECTIONS (STA. 3+670.00 - STA. 4+720.000), 1 OF 2	DRAWING NO : E1-2/S-47 SHEET NO : 47 / 48

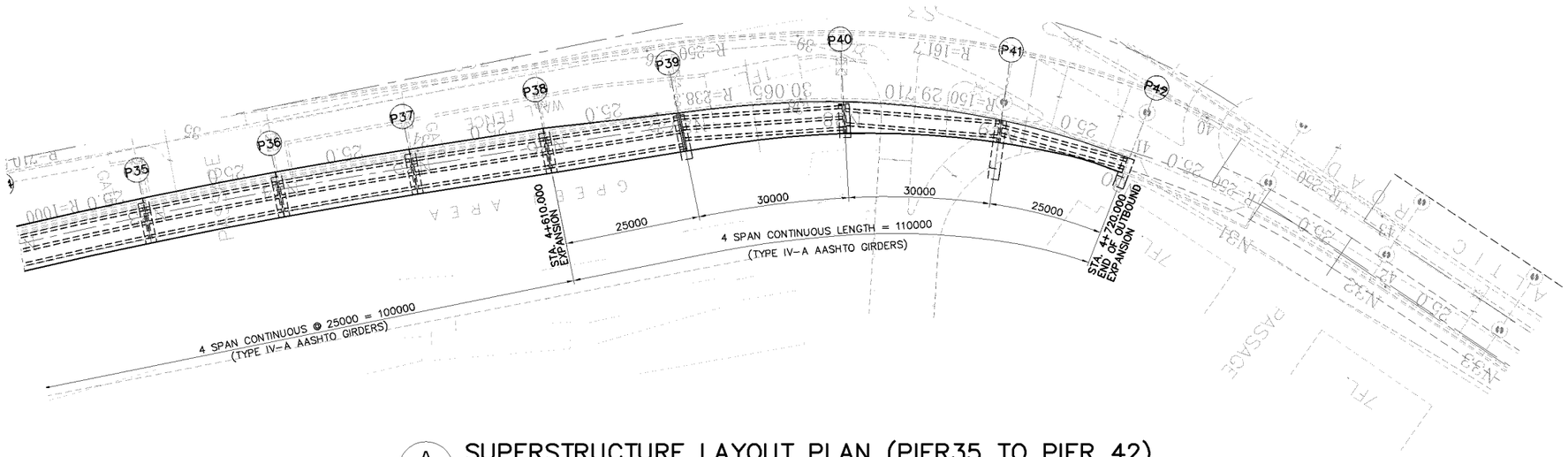

A SCALE — SUPERSTRUCTURE LAYOUT PLAN (PIER35 TO PIER 42)

1:1000

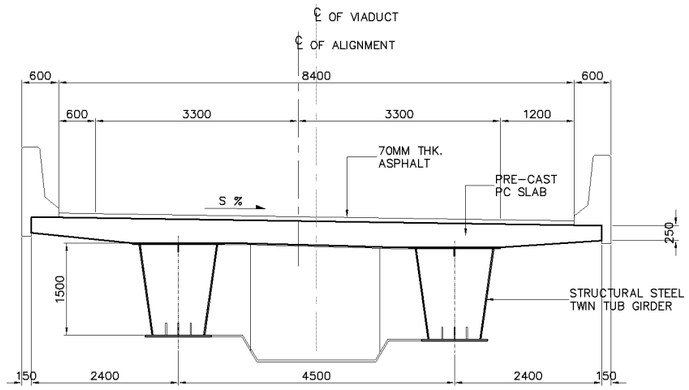

2 SCALE — TYPICAL SECTION @ PIER SUPPORT

1:100

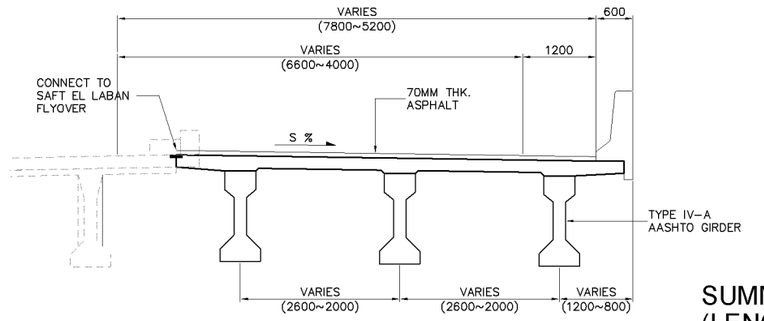

3 SCALE — TYPICAL SECTION IN SPAN TYPE IV-A AASHTO GIRDER (3 GIRDERS)

1:100

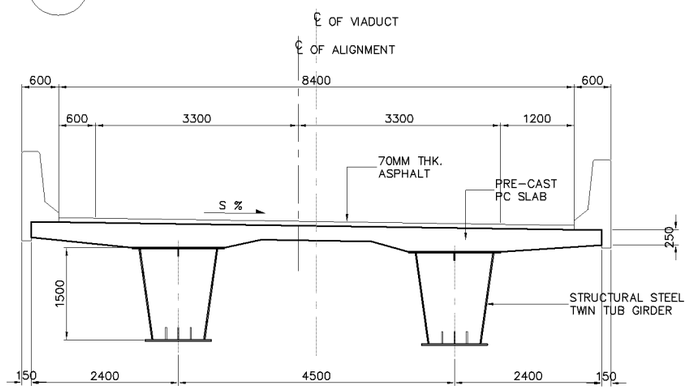

1 SCALE — TYPICAL SECTION IN SPAN

1:100

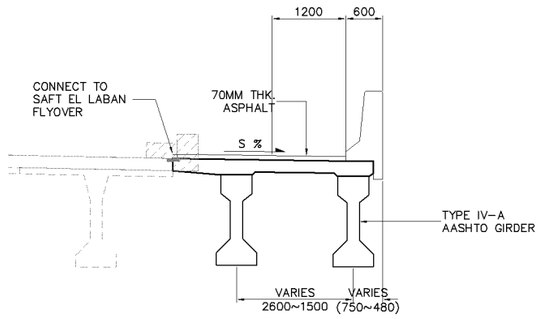

4 SCALE — TYPICAL SECTION IN SPAN TYPE IV-A AASHTO GIRDER (2 GIRDERS)

1:100

SUMMARY OF QUANTITIES - SUPERSTRUCTURE (LENGTH = 1,048.50 M.)

DESCRIPTION	UNIT	QUANTITIES			
		PCDG	SS GIRDER	DECK	TOTAL
EARTH WORKS					
STRUCTURAL STEEL	M.T.		638.00		638.00
STRUCTURAL CONCRETE Fcu=300 kg/cm2	CU.M.			681.00	681.00
STRUCTURAL CONCRETE Fcu=450 kg/cm2	CU.M.	558.00		2341.00	2899.00
REINFORCING BARS	M.T.	112.00		756.00	868.00
PRESTRESSING STEEL – LONGITUDINAL	M.T.	17.00		70.00	87.00
PRESTRESSING STEEL – TRANSVERSE	M.T.			23.00	23.00
EXPANSION JOINT	M.			121.00	121.00
BRIDGE RAILING	M.			2097.00	2097.00
DECK WATERPROOFING	SQ..M.			6404.00	6404.00
ASPHALT	CU.M.			683.00	683.00

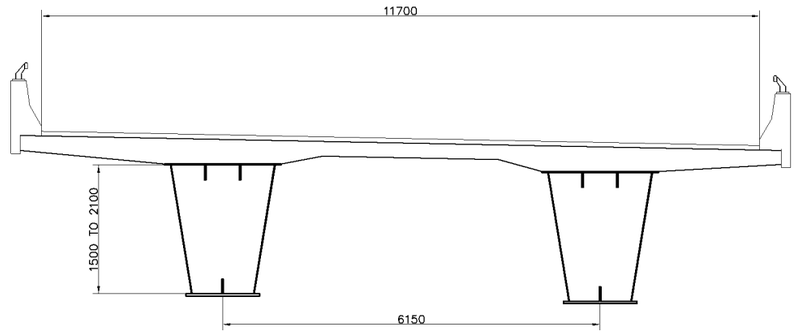

SPAN 25m to 40m

1a SCALE

STRUCTURAL STEEL TUB GIRDERS TYPE – 1 (SH. AL–AHRAM STREET)

1:100

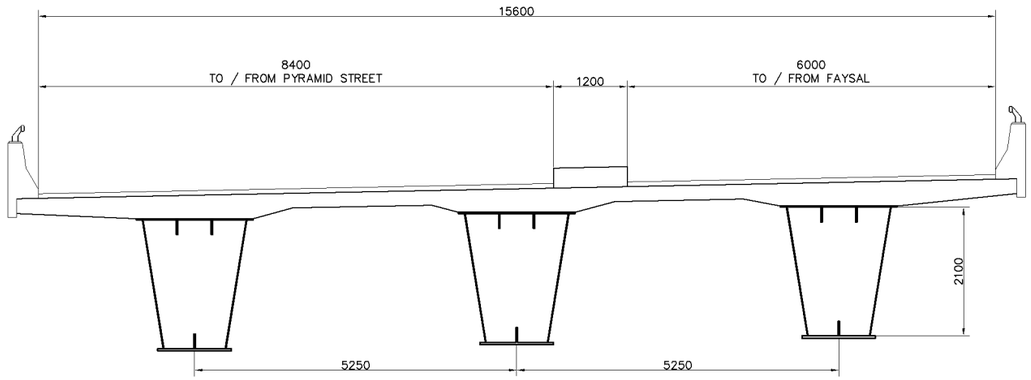

SPAN 40m

1b SCALE

STRUCTURAL STEEL TUB GIRDERS TYPE – 2 (MIDAN AL–JIZAH)

1:100

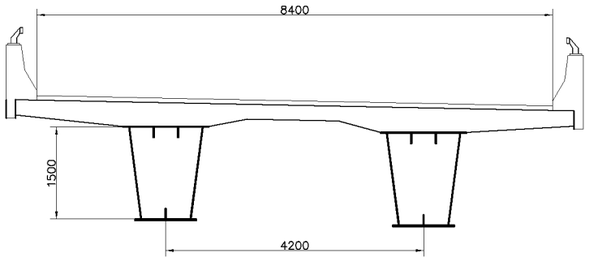

SPAN 25m

1c SCALE

STRUCTURAEL STEEL TUB GIRDERS TYPE – 3 & TYPE – 4 (SH. AL–AHRAM ST. & TO FAYSAL)

1:100

1 SCALE

STRUCTURAL STEEL TUB GIRDERS

1:100

KATAHIRA & ENGINEERS INTERNATIONAL PRICE WATERHOUSE COOPERS ADVISORY CO., LTD.	JICA JAPAN INTERNATIONAL COOPERATION AGENCY	GENERAL AUTHORITY FOR ROADS BRIDGES AND LAND TRANSPORT (GARBLT) MINISTRY OF TRANSPORT ARAB REPUBLIC OF EGYPT	PROJECT AND LOCATION : FEASIBILITY STUDY ON HIGH PRIORITY URBAN TOLL EXPRESSWAYS IN CAIRO E3-3 EXPRESSWAY	SCALE : 1:150 FULL SIZE A3	DRAWING TITLE : SUPERSTRUCTURE LAYOUT & SECTIONS (WEST OF NILE) 3 OF 3	DRAWING NO : E3-3/S-22 SHEET NO : 22 / 22