ATTACHMENT 5 Result of Power System Analysis

List of Attachments

1. Power Flow and Voltage Analysis

Fault: One Circuit Tripped Point (N-1 Criteria)

Case	Bheramara [MW]	Generation [MW]	Fault Point	Voltage [kV]	Year
1	425	7761	–	230	2012
2	425	7761	–	132	2012
3	450	7761	–	230	2012
4	450	7761	–	132	2012
5	500	7761	–	230	2012
6	500	7761	–	132	2012
7	575	7761	–	230	2012
8	575	7761	–	132	2012
9	425	7761	230kV Bheramara S/S - 230kV Jhenaidah S/S	230	2012
10	425	7761	230kV Bheramara S/S - 230kV Jhenaidah S/S	132	2012
11	450	7761	230kV Bheramara S/S - 230kV Jhenaidah S/S	230	2012
12	450	7761	230kV Bheramara S/S - 230kV Jhenaidah S/S	132	2012
13	500	7761	230kV Bheramara S/S - 230kV Jhenaidah S/S	230	2012
14	500	7761	230kV Bheramara S/S - 230kV Jhenaidah S/S	132	2012
15	575	7761	230kV Bheramara S/S - 230kV Jhenaidah S/S	230	2012
16	575	7761	230kV Bheramara S/S - 230kV Jhenaidah S/S	132	2012
17	575	7761	230kV Bheramara S/S - 230kV Ishudri S/S	230	2012
18	575	7761	230kV Bheramara S/S - 230kV Ishudri S/S	132	2012
19	575	7761	230kV Bheramara S/S - 132kV Bheramara S/S	230	2012
20	575	7761	230kV Bheramara S/S - 132kV Bheramara S/S	132	2012
21	575	7761	230kV Bheramara S/S - Bheramara CCPS	230	2012
22	575	7761	230kV Bheramara S/S - Bheramara CCPS	132	2012
23	575	7761	230kV Ishudri S/S - 230kV Baghabari S/S	230	2012
24	575	7761	230kV Ishudri S/S - 230kV Baghabari S/S	132	2012

Case	Bheramara [MW]	Generation [MW]	Fault Point	Voltage [kV]	Year
25	575	7761	230kV Ishudri S/S - 230kV Ghorasal S/S	230	2012
26	575	7761	230kV Ishudri S/S - 230kV Ghorasal S/S	132	2012
27	—	4130	—	230	2007
28	—	4130	—	132	2007

2. Fault Current Analysis

Fault: Three-Phase Short Current Accident Point

Case	Generator Rated Capacity MW	Year
Ⅰ	425	2012
Ⅱ	450	2012
Ⅲ	500	2012
Ⅳ	575	2012

LOAD FLOW STUDY REPORT

QF-SPL-15

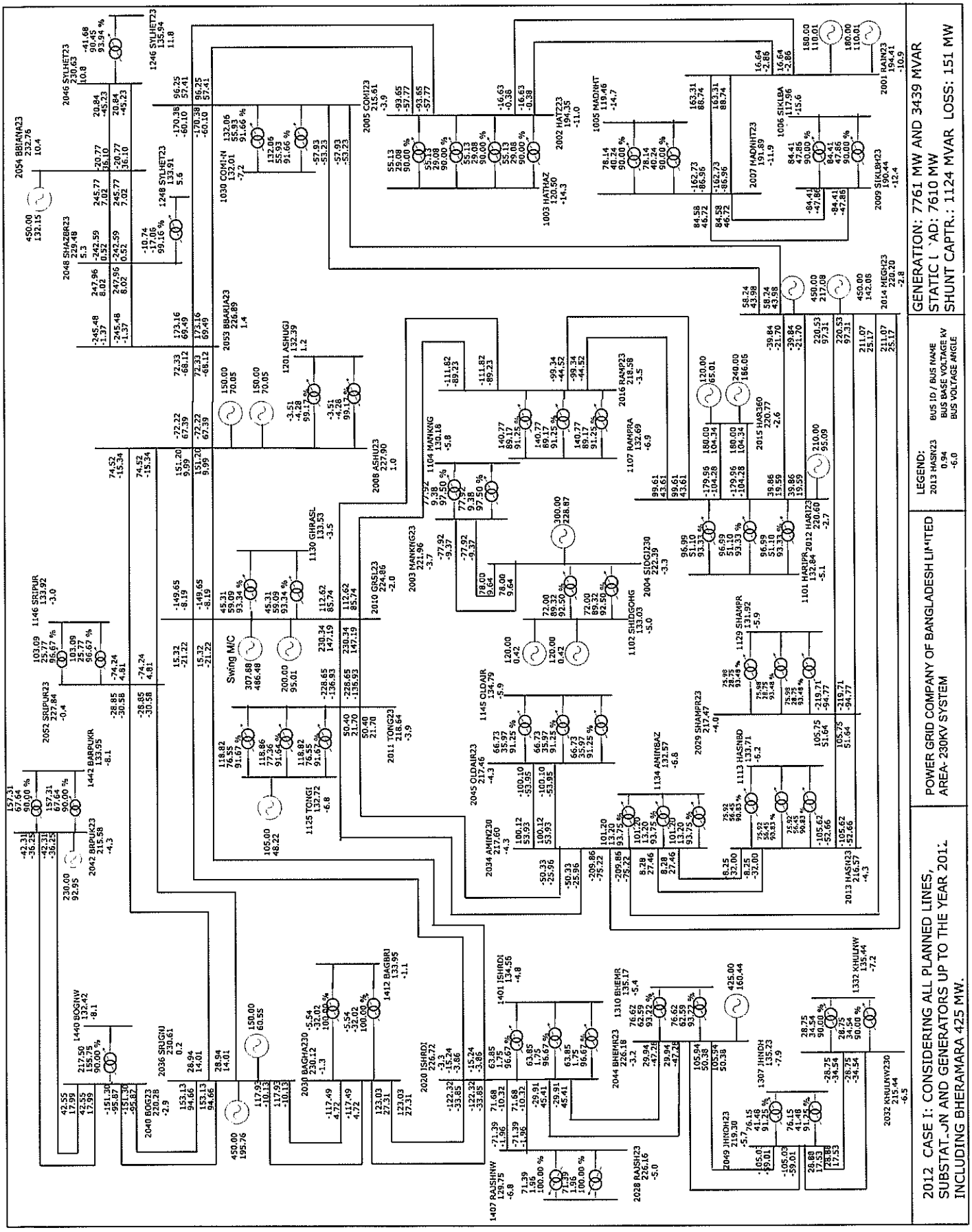

Manager, System Planning, PGCB
Date:

Dy. Manager, System Planning, PGCB
Date:

LOAD FLOW STUDY REPORT

QF-SPL-15

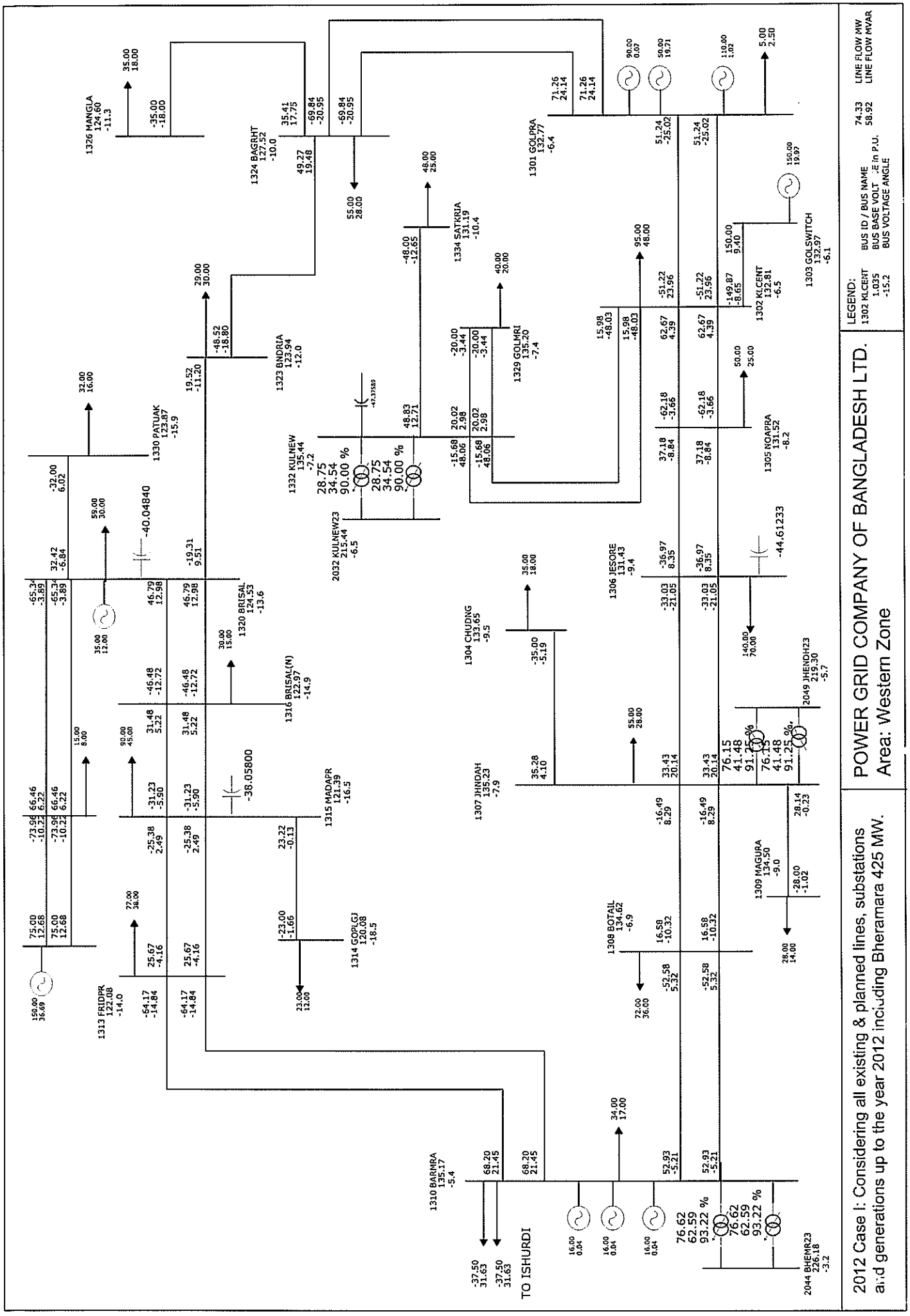

Manager System Planning, PGCB.
Date:

Dy. Manager System Planning, PGCB.
Date:

LOAD FLOW STUDY REPORT

QF-SPL-15

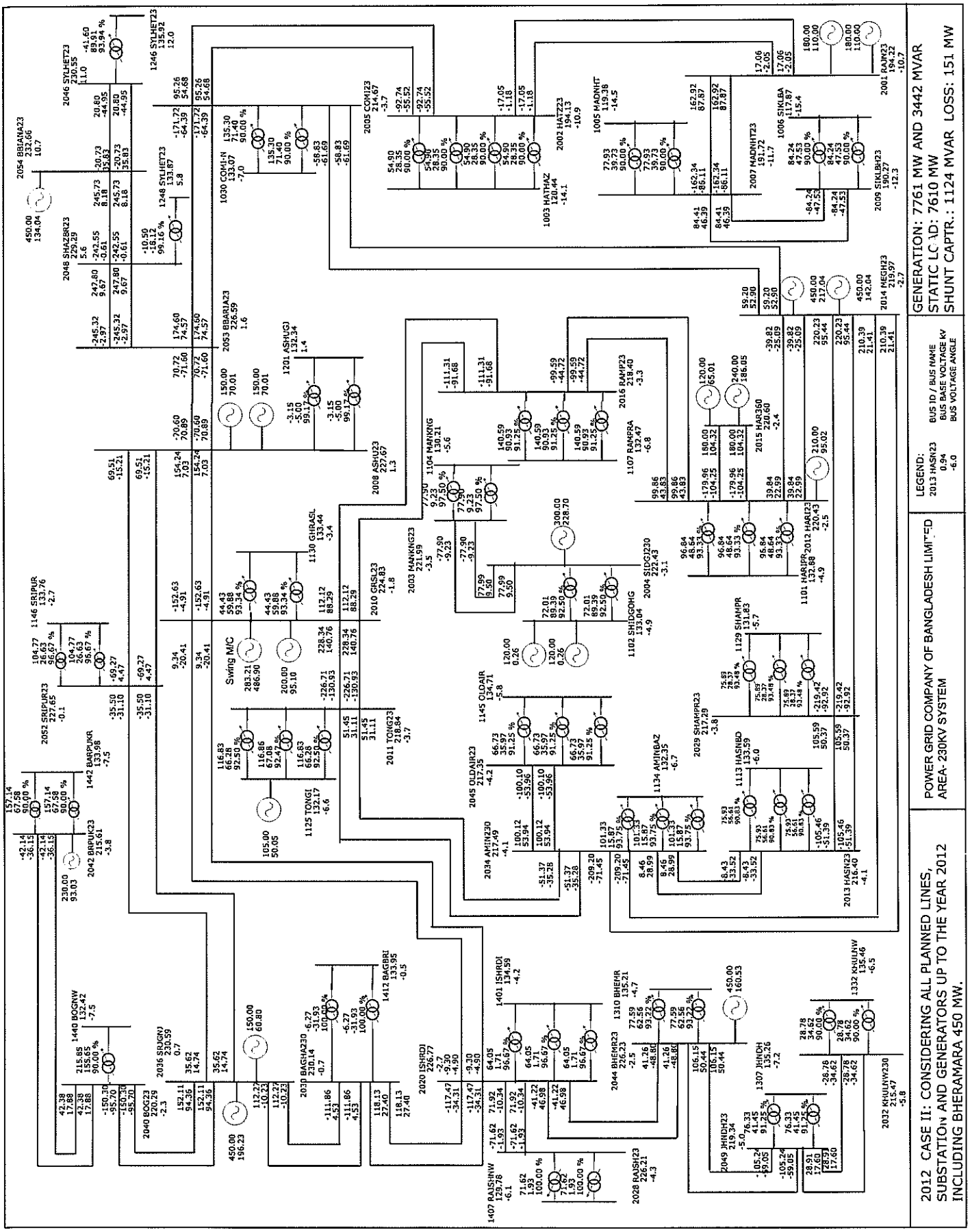

Manager, System Planning, PGCB
Date:

Dy. Manager, System Planning, PGCB
Date:

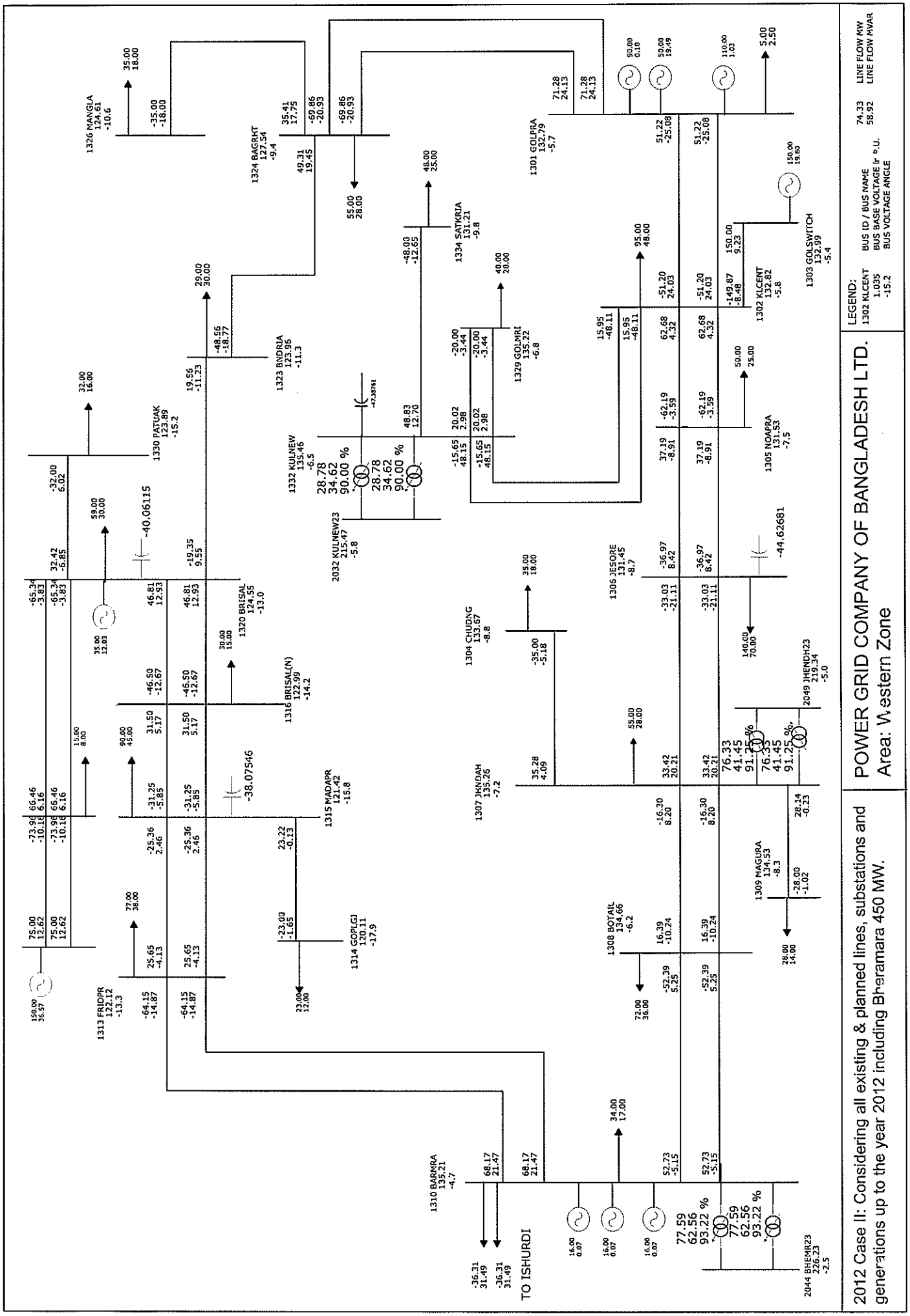

Manager System Planning, PGCB.
Date:

Dy. Manager System Planning, PGCB.
Date:

LOAD FLOW STUDY REPORT

QF-SPL-15

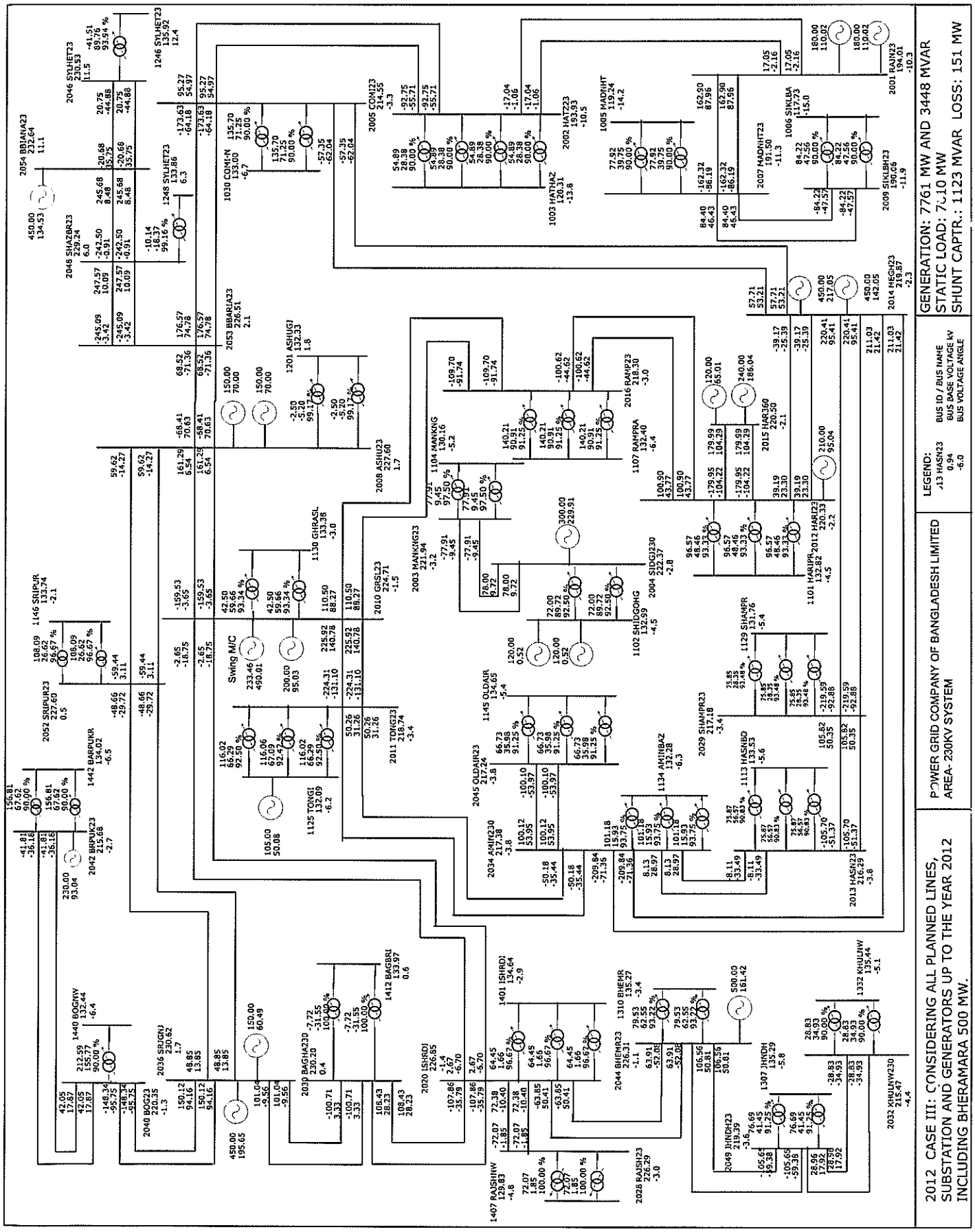

Manager, System Planning, PGCB
Date:

Dy. Manager, System Planning, PGCB
Date:

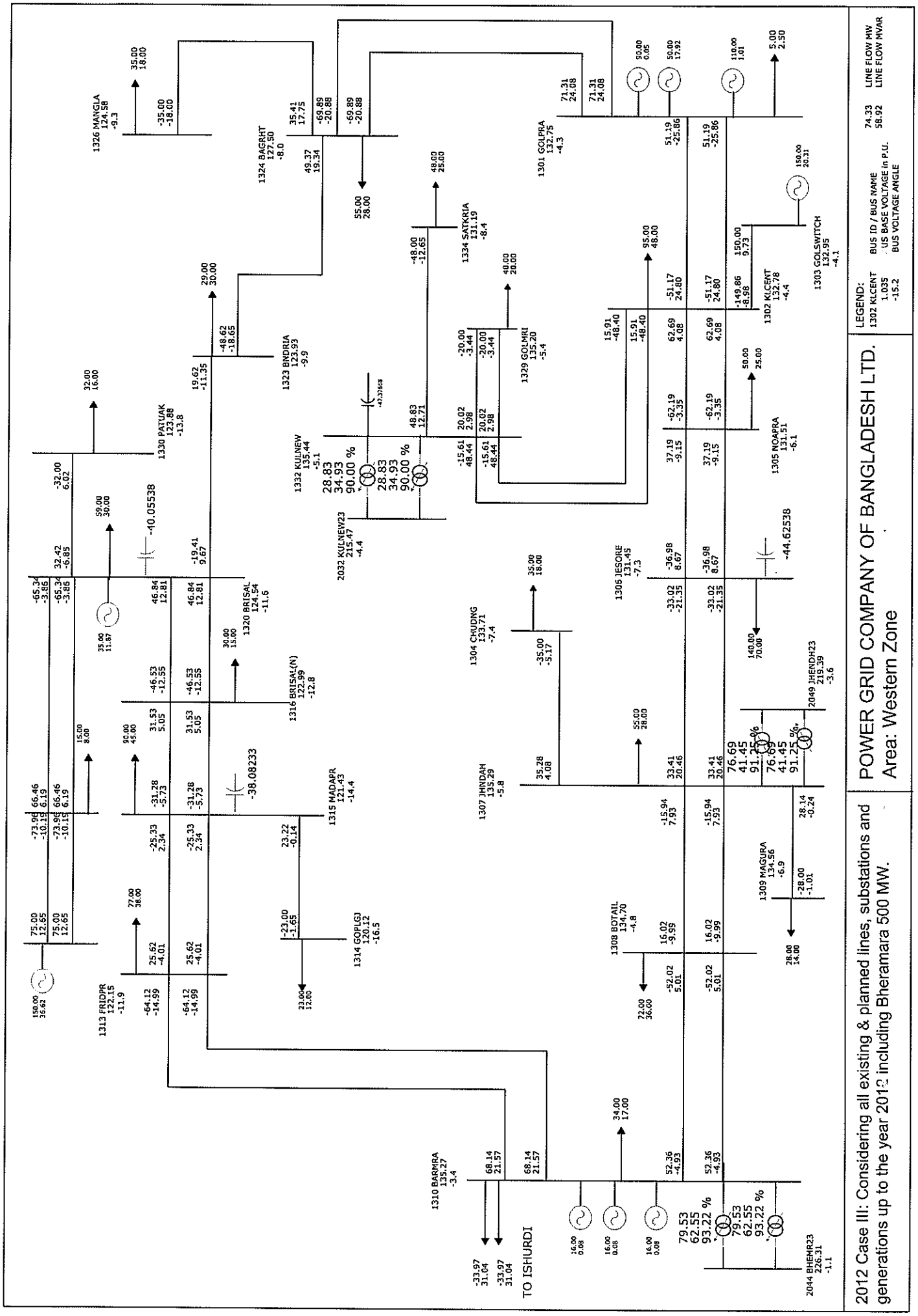

Dy. Manager System Planning, PGCB.
Date:

Manager System Planning, PGCB.
Date:

LOAD FLOW STUDY REPORT

QF-SPL-15

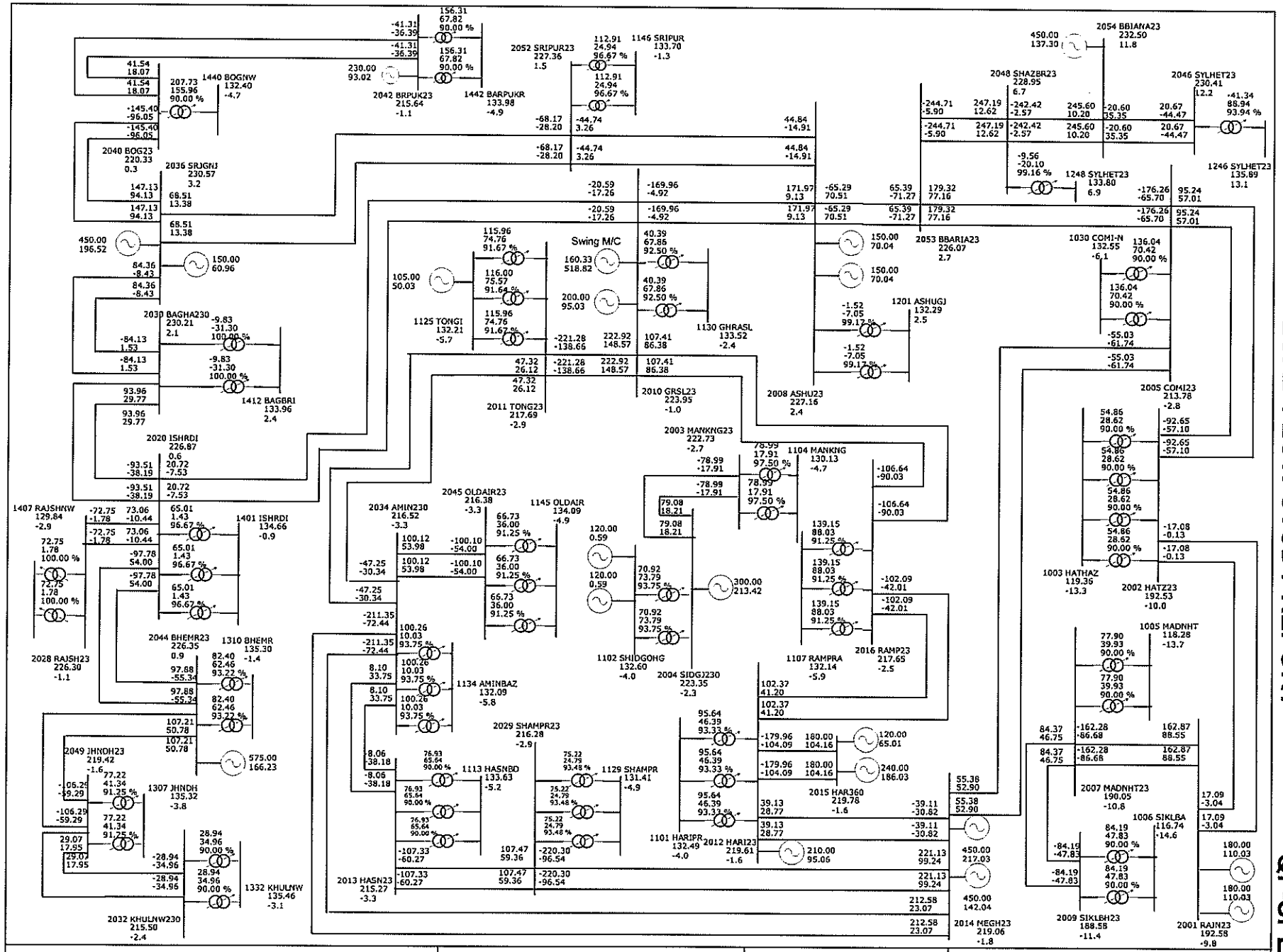

2012 CASE IV: CONSIDERING ALL PLANNED LINES, SUBSTATION AND GENERATORS UP TO THE YEAR 2012 INCLUDING BHERAMARA 575 MW.

POWER GRID COMPANY OF BANGLADESH LIMITED
AREA- 230KV SYSTEM

LEGEND:
2013 HA..23 — BUS ID / BUS NAME
0.94 — BUS BASE VOLTAGE kV
-6.0 — BUS VOLTAGE ANGLE

GENERATION: 7763 MW AND 3478 MVAR
STATIC LOAD: 7610 MW
SHUNT CAPTR.: 1121 MVAR LOSS: 153 MW

Dy. Manager, System Planning, PGCB
Date:

Manager, System Planning, PGCB
Date:

LOAD FLOW STUDY REPORT

QF-SPL-15

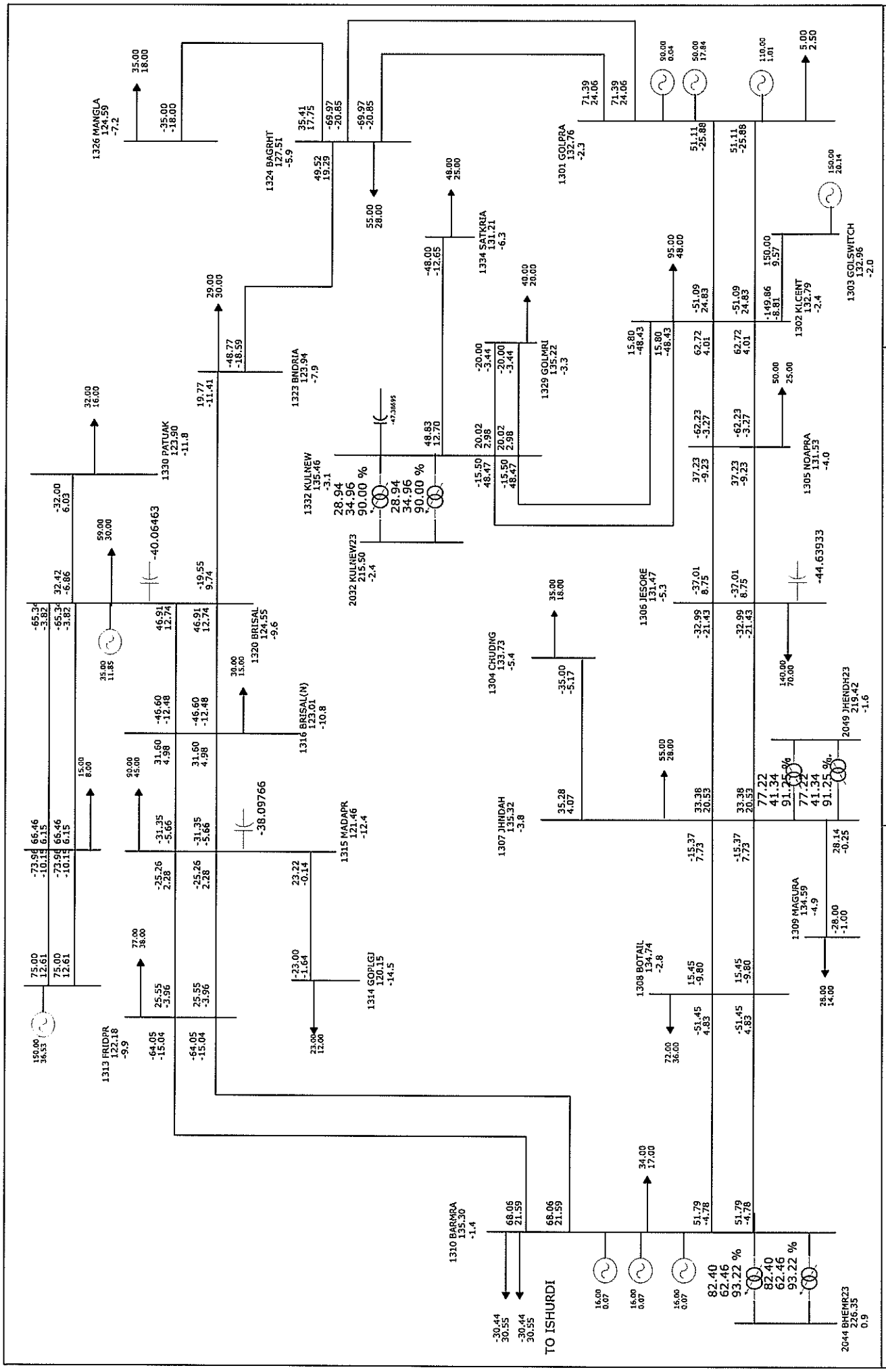

Dy. Manager System Planning, PGCB.
Date:

Manager System Planning, PGCB.
Date:

LOAD FLOW STUDY REPORT

QF-SPL-15

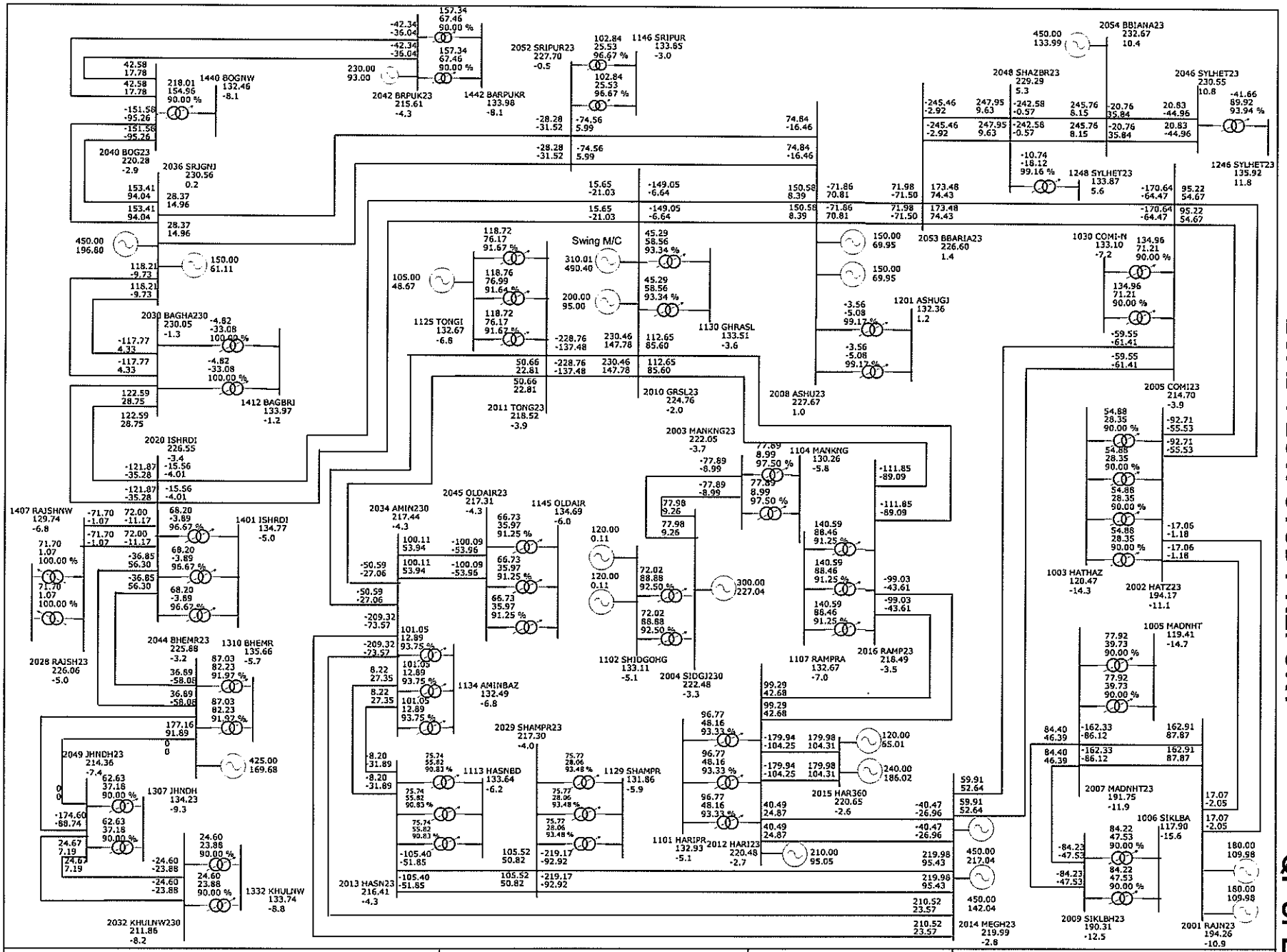

2012 CASE I WITH TRIPPING BHERAMARA-JHENAIDAH ONE CIRCUIT: CONSIDERING ALL PLANNED LINES, SUBSTATION AND GENERATORS UP TO THE YEAR 2012 INCLUDING BHERAMARA 425 MW.

POWER GRID COMPANY OF BANGLADESH LIMITED
AREA- 230KV SYSTEM

LEGEND:

2013 HASN23	BUS ID / BUS NAME
0.94	BUS BASE VOLTAGE kV
-6.0	BUS VOLTAGE ANGLE

GENERATION: 7763 MW AND 3473 MVAR
STATIC LOAD: 7610 MW
SHUNT CAPTR.: 1121 MVAR LOSS: 153 MW

Dy. Manager, System Planning, PGCB
Date:

Manager, System Planning, PGCB
Date:

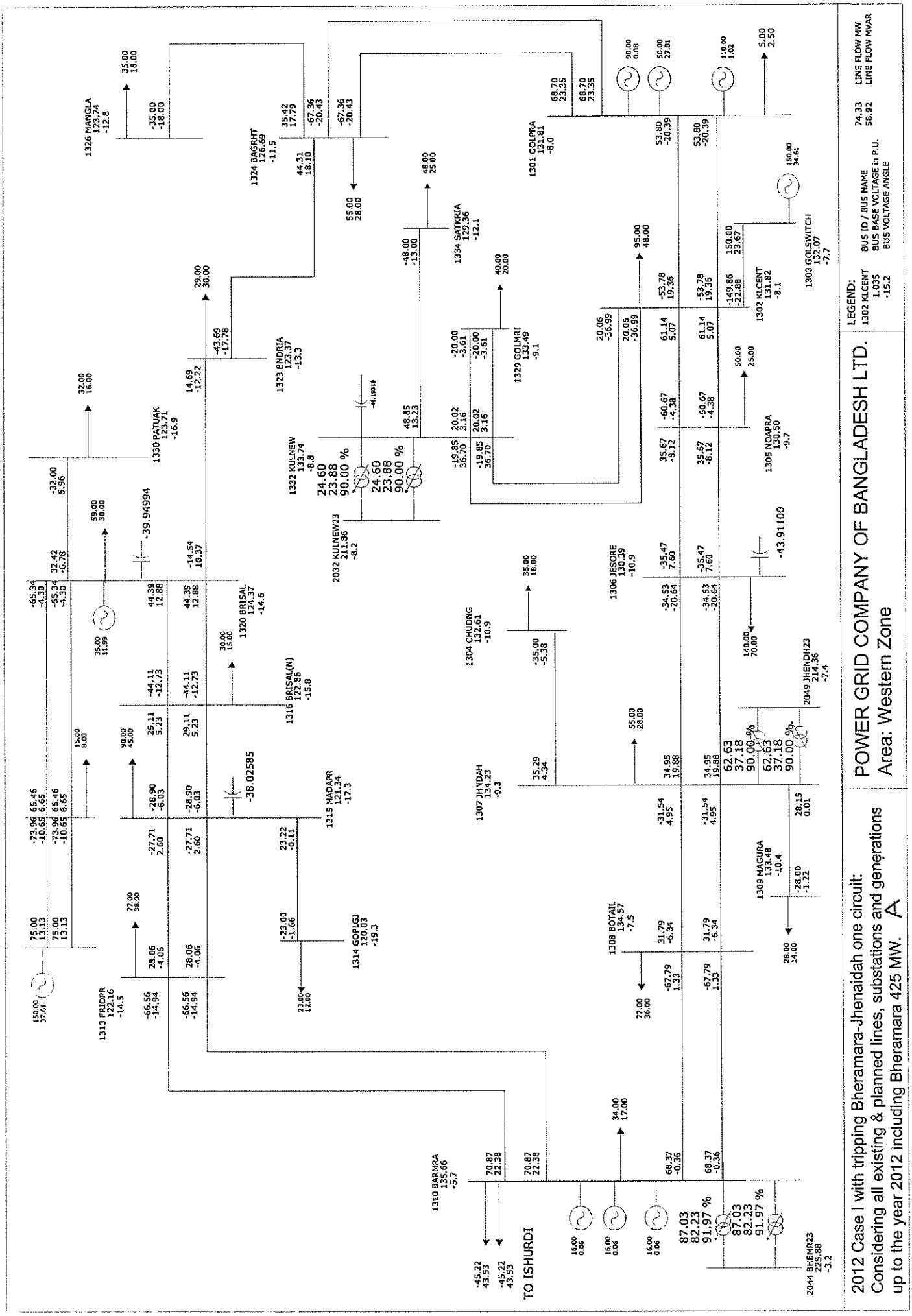

Manager System Planning, PGCB.
Date:

Dy. Manager System Planning, PGCB.
Date:

LOAD FLOW STUDY REPORT

QF-SPL-15

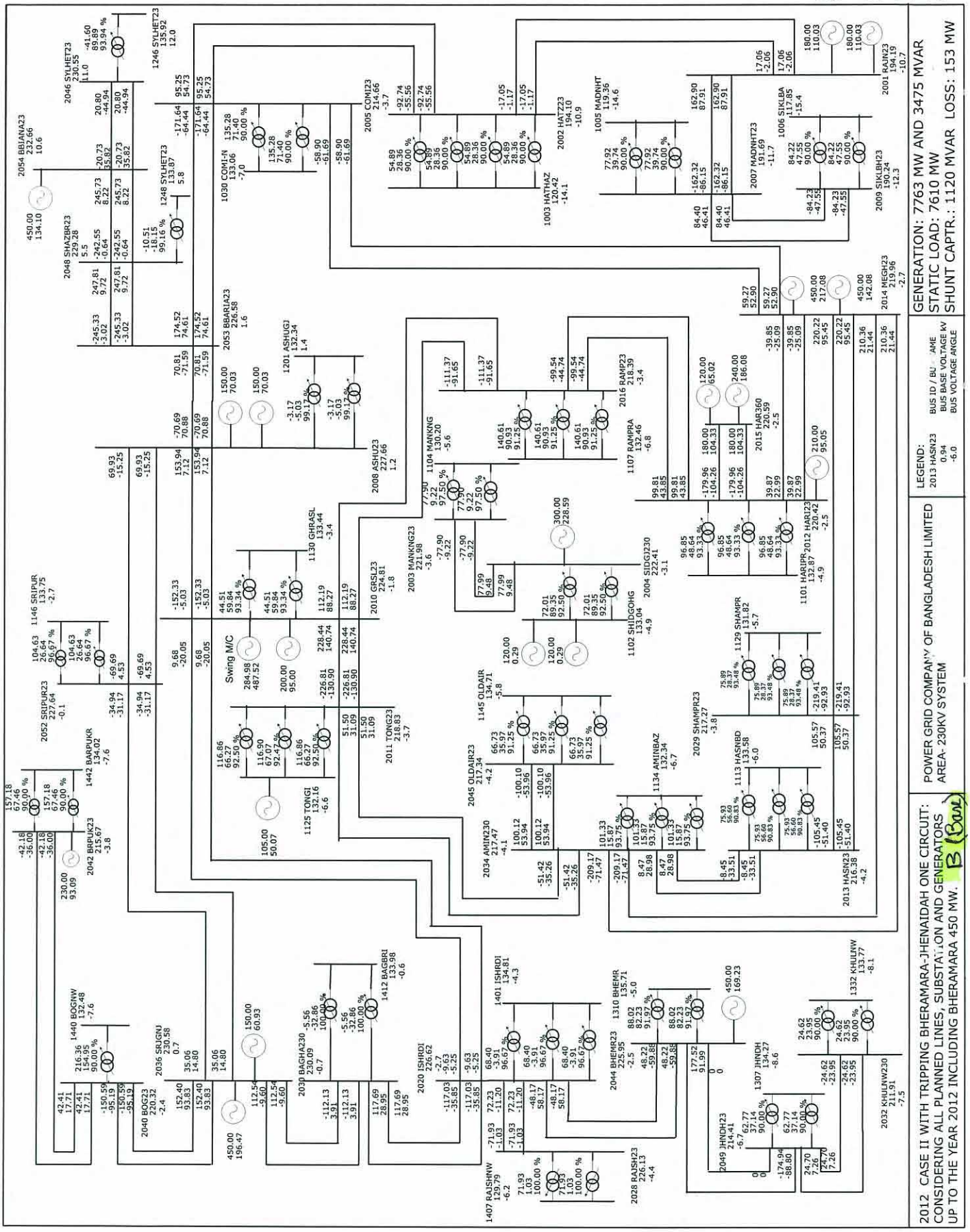

Manager, System Planning, PGCB
Date:

Dy. Manager, System Planning, PGCB
Date:

LOAD FLOW STUDY REPORT

QF-SPL-15

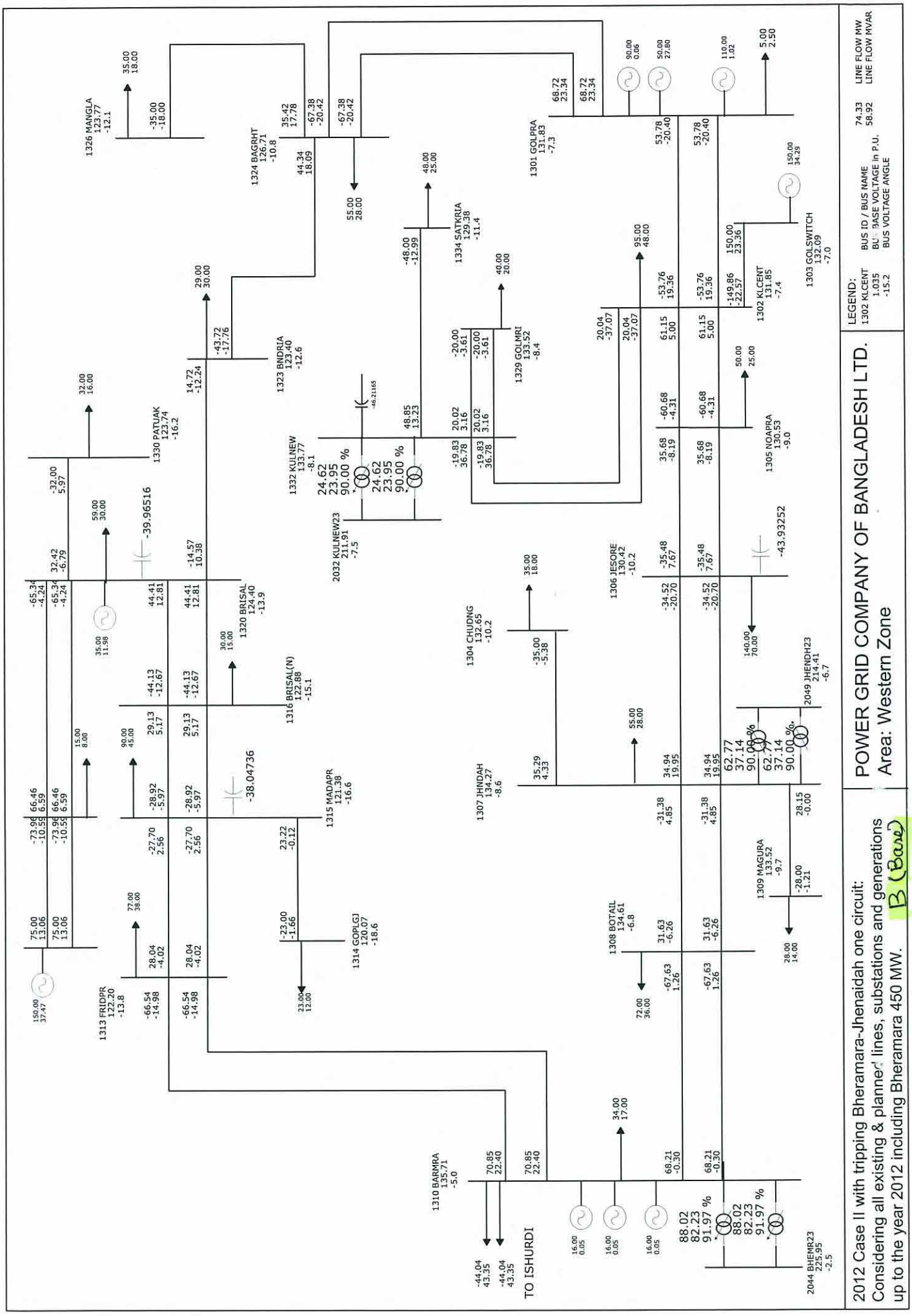

POWER GRID COMPANY OF BANGLADESH LTD.

Area: Western Zone

2012 Case II with tripping Bheramara-Jhenaidah one circuit: Considering all existing & planned lines, substations and generations up to the year 2012 including Bheramara 450 MW. B (Base)

Manager System Planning, PGCB.
Date:

Dy. Manager System Planning, PGCB.
Date:

LOAD FLOW STUDY REPORT

QF-SPL-15

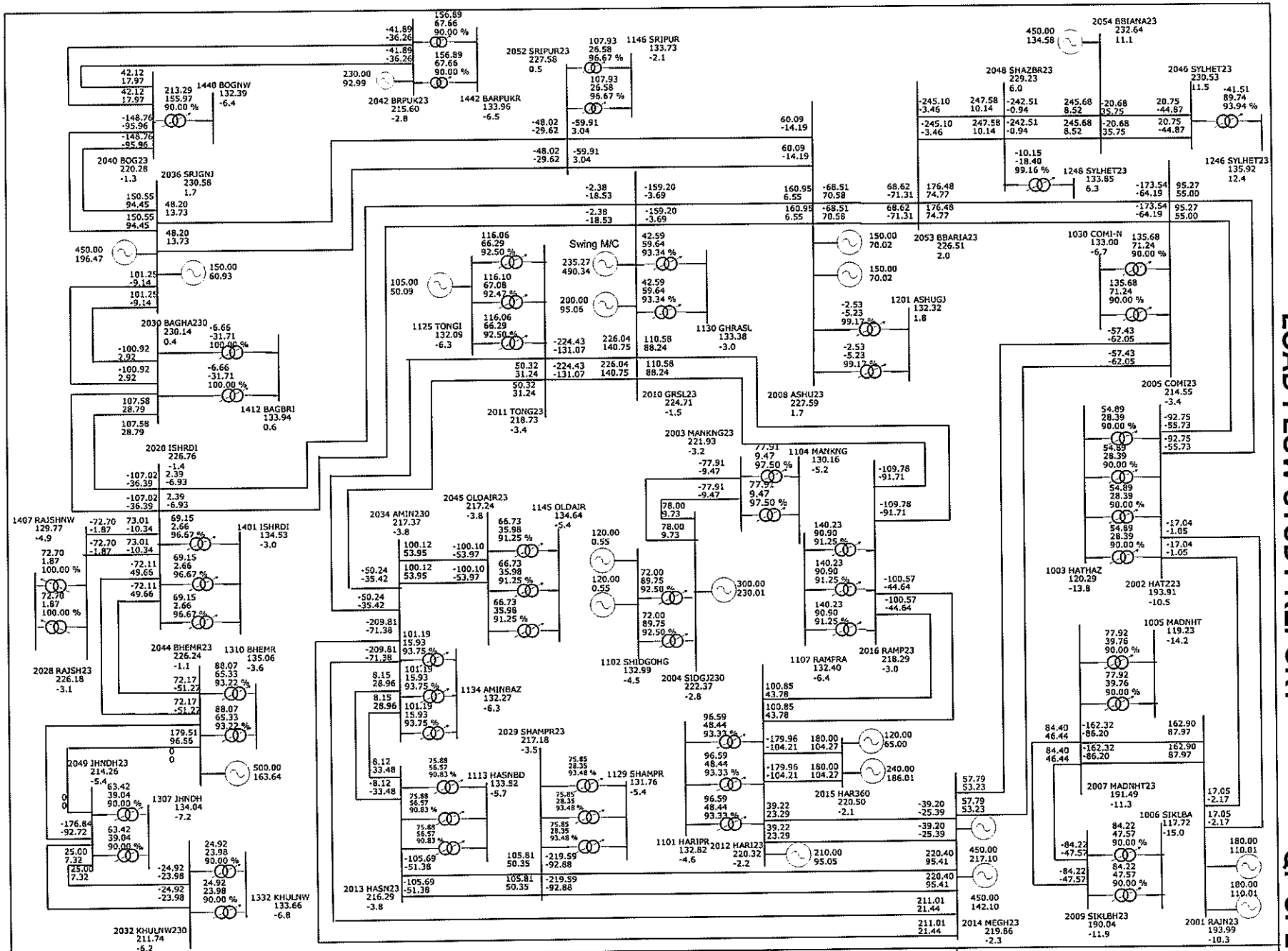

2012 CASE III WITH TRIPPING BHERAMARA-JHENAIDAH ONE CIRCUIT: CONSIDERING ALL PLANNED LINES, SUBSTATION AND GENERATORS UP TO THE YEAR 2012 INCLUDING BHERAMARA 500 MW.

POWER GRID COMPANY OF BANGLADESH LIMITED
AREA- 230KV SYSTEM

LEGEND:
2013 HASN23 - BUS ID / BUS NAME
0.94 - BUS BASE VOLTAGE KV
-6.0 - BUS VOLTAGE ANGLE

GENERATION: 7763 MW AND 3482 MVAR
STATIC LOAD: 7610 MW
SHUNT CAPTR.: 1118 MVAR LOSS: 153 MW

Dy. Manager, System Planning, PGCB
Date:

Manager, System Planning, PGCB
Date:

LOAD FLOW STUDY REPORT

QF-SPL-15

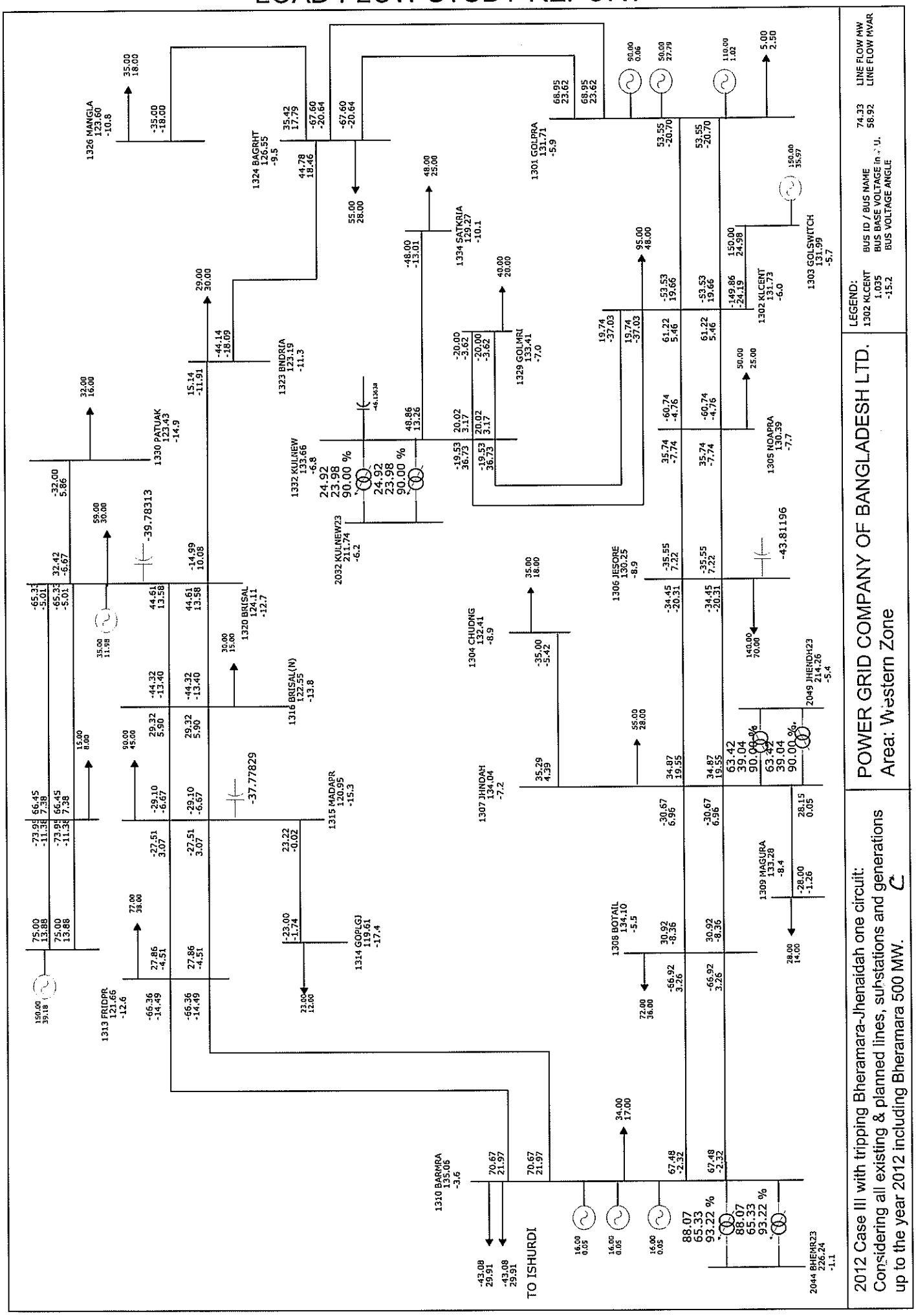

Dy. Manager System Planning, PGCB.
Date:

Manager System Planning, PGCB.
Date:

LOAD FLOW STUDY REPORT

QF-SPL-15

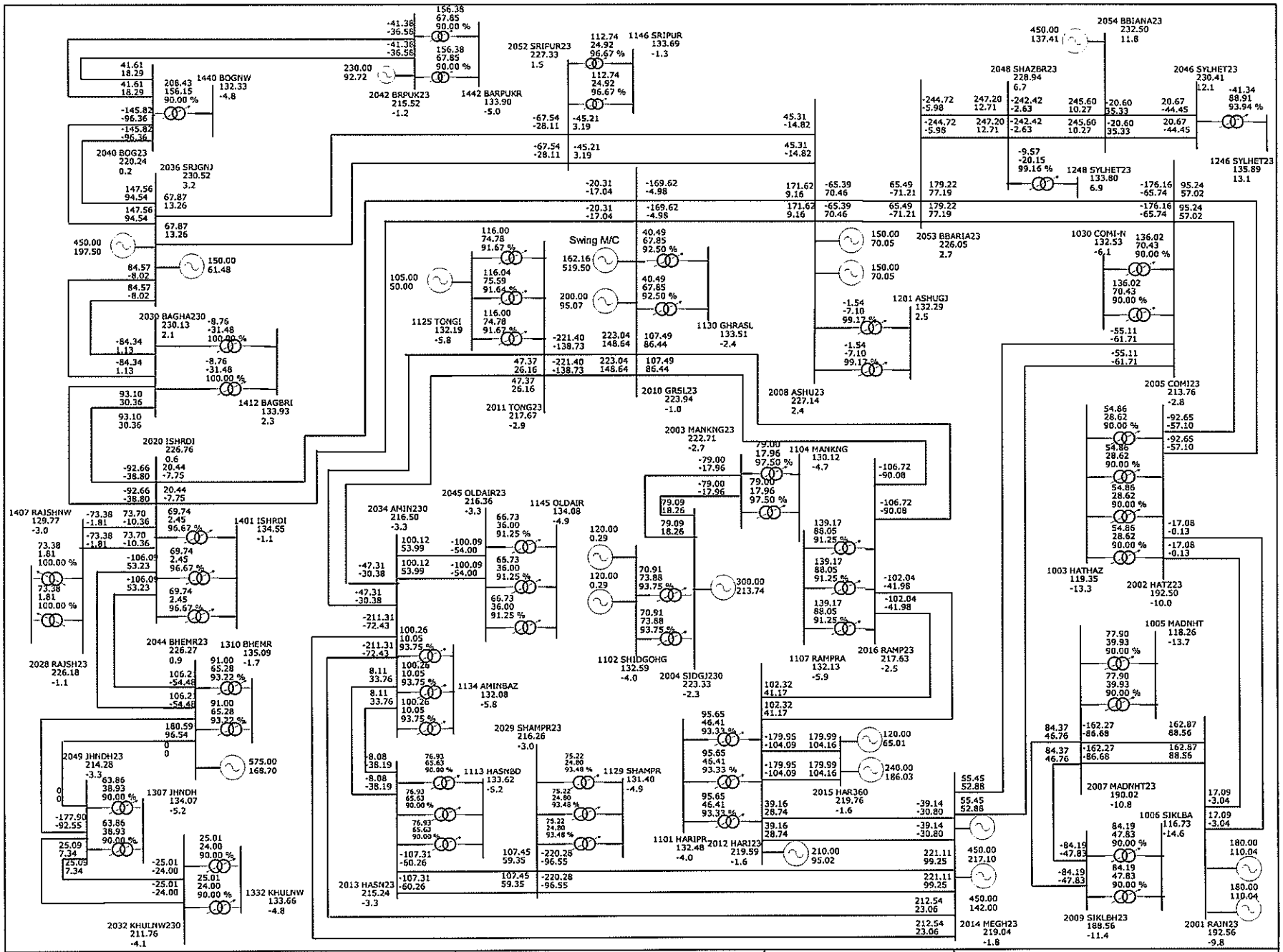

2012 CASE IV WITH TRIPPING BHERAMARA-JHENAIDAH ONE CIRCUIT: CONSIDERING ALL PLANNED LINES, SUBSTATION AND GENERATORS UP TO THE YEAR 2012 INCLUDING BHERAMARA 575 MW. D

POWER GRID COMPANY OF BANGLADESH LIMITED
AREA- 230KV SYSTEM

LEGEND:
2013 HASN23 — BUS ID / BUS NAME
0.94 — BUS BASE VOLTAGE kV
-6.0 — BUS VOLTAGE ANGLE

GENERATION: 7765 MW AND 3512 MVAR
STATIC LOAD: 7610 MW
SHUNT CAPTR.: 1116 MVAR LOSS: 155 MW

Dy. Manager, System Planning, PGCB
Date:

Manager, System Planning, PGCB
Date:

LOAD FLOW STUDY REPORT

QF-SPL-15

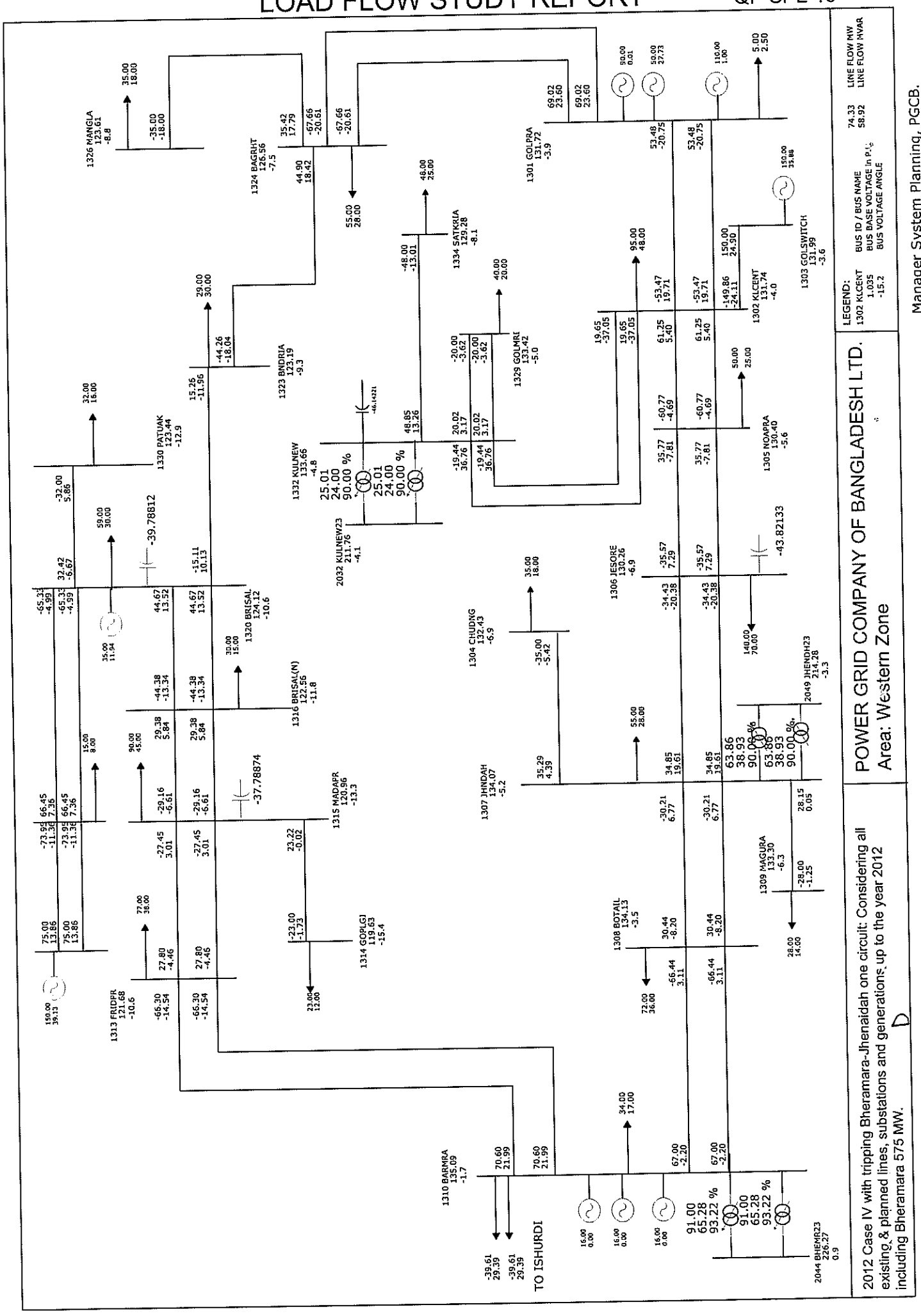

Manager System Planning, PGCB.
Date:

Dy. Manager System Planning, PGCB.
Date:

LOAD FLOW STUDY REPORT

QF-SPL-15

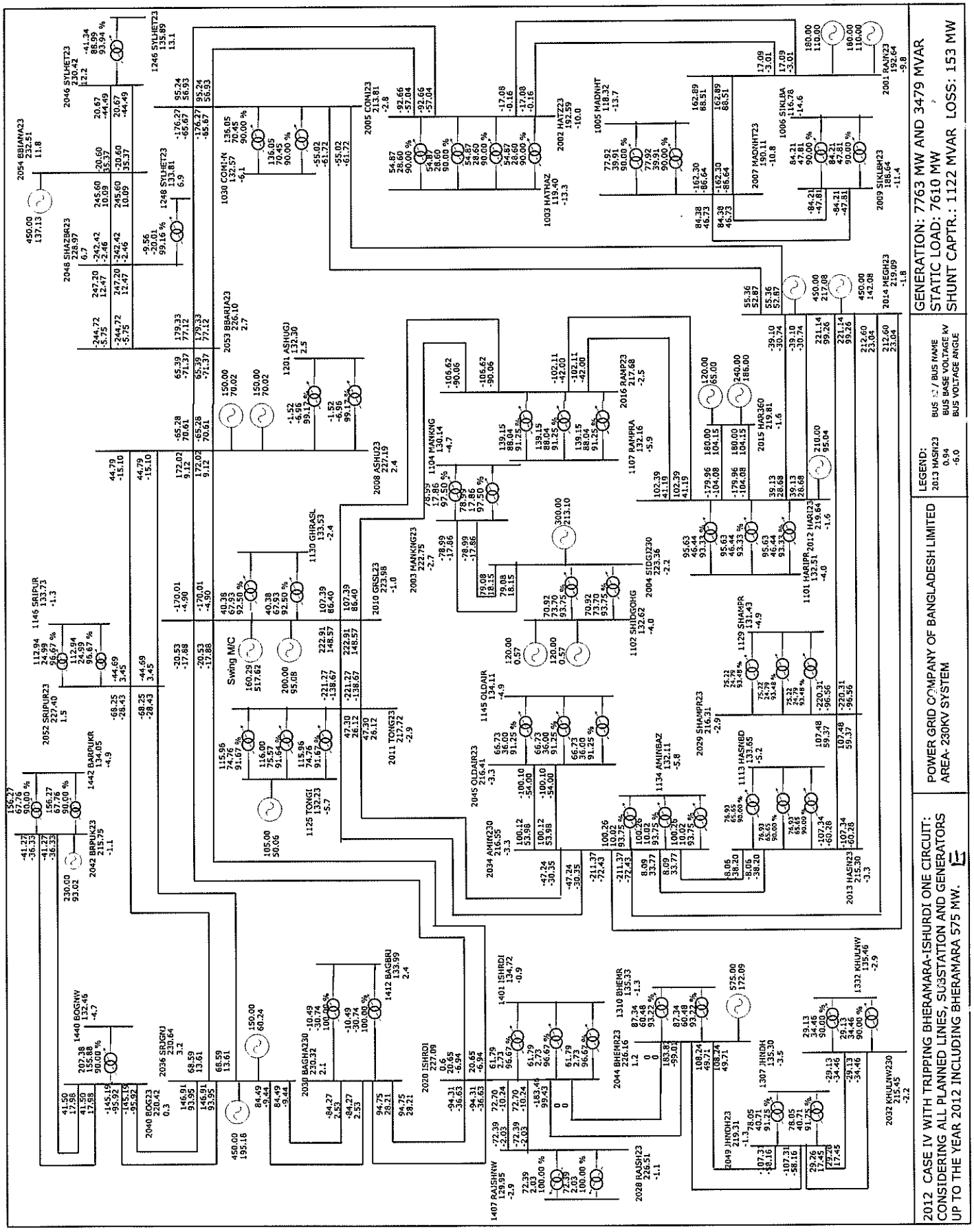

Manager, System Planning, PGCB
Date:

Dy. Manager, System Planning, PGCB
Date:

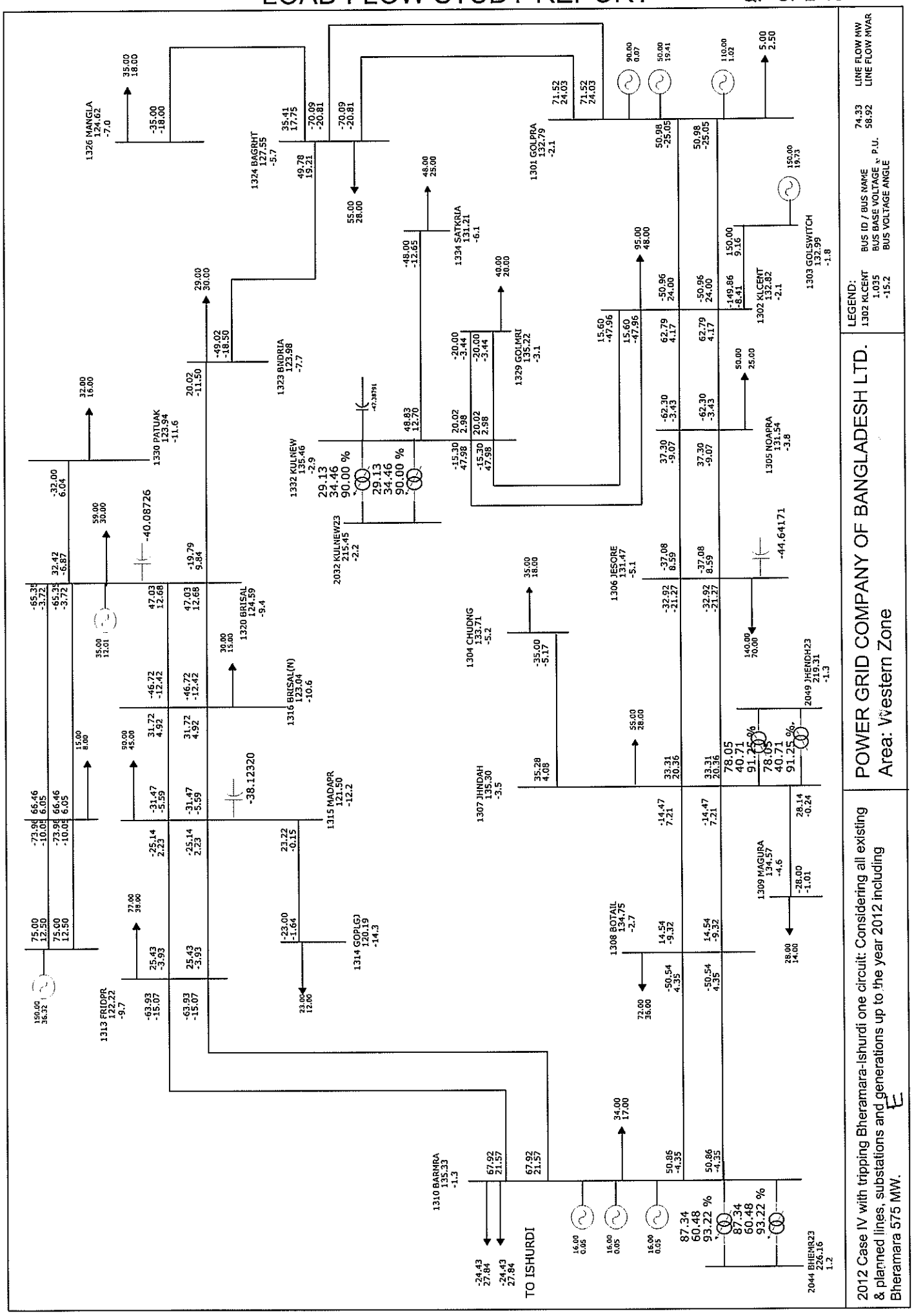

Dy. Manager System Planning, PGCB.
Date:

Manager System Planning, PGCB.
Date:

LOAD FLOW STUDY REPORT

QF-SPL-15

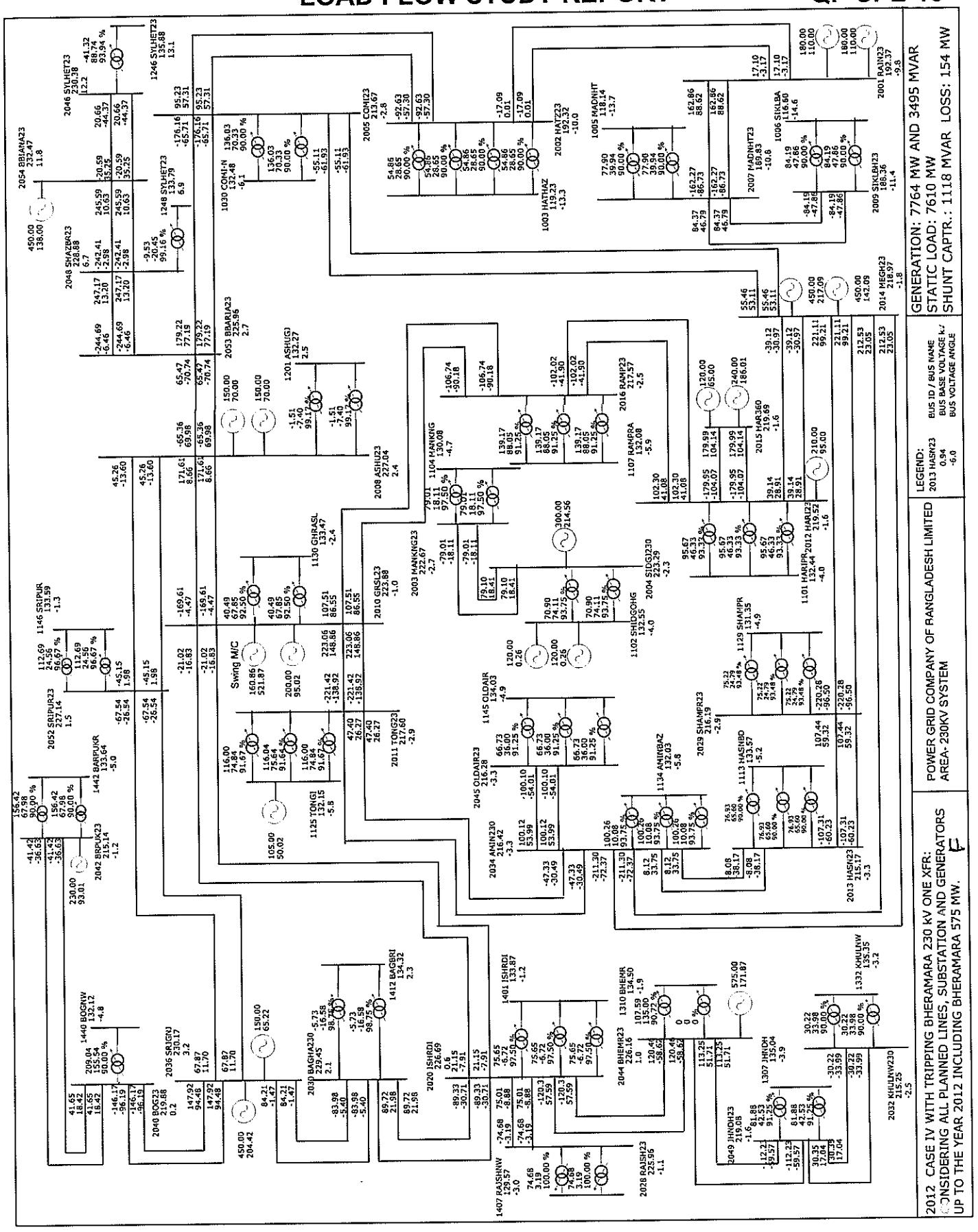

Manager, System Planning, PGCB
Date:

Dy. Manager, System Planning, PGCB
Date:

LOAD FLOW STUDY REPORT

QF-SPL-15

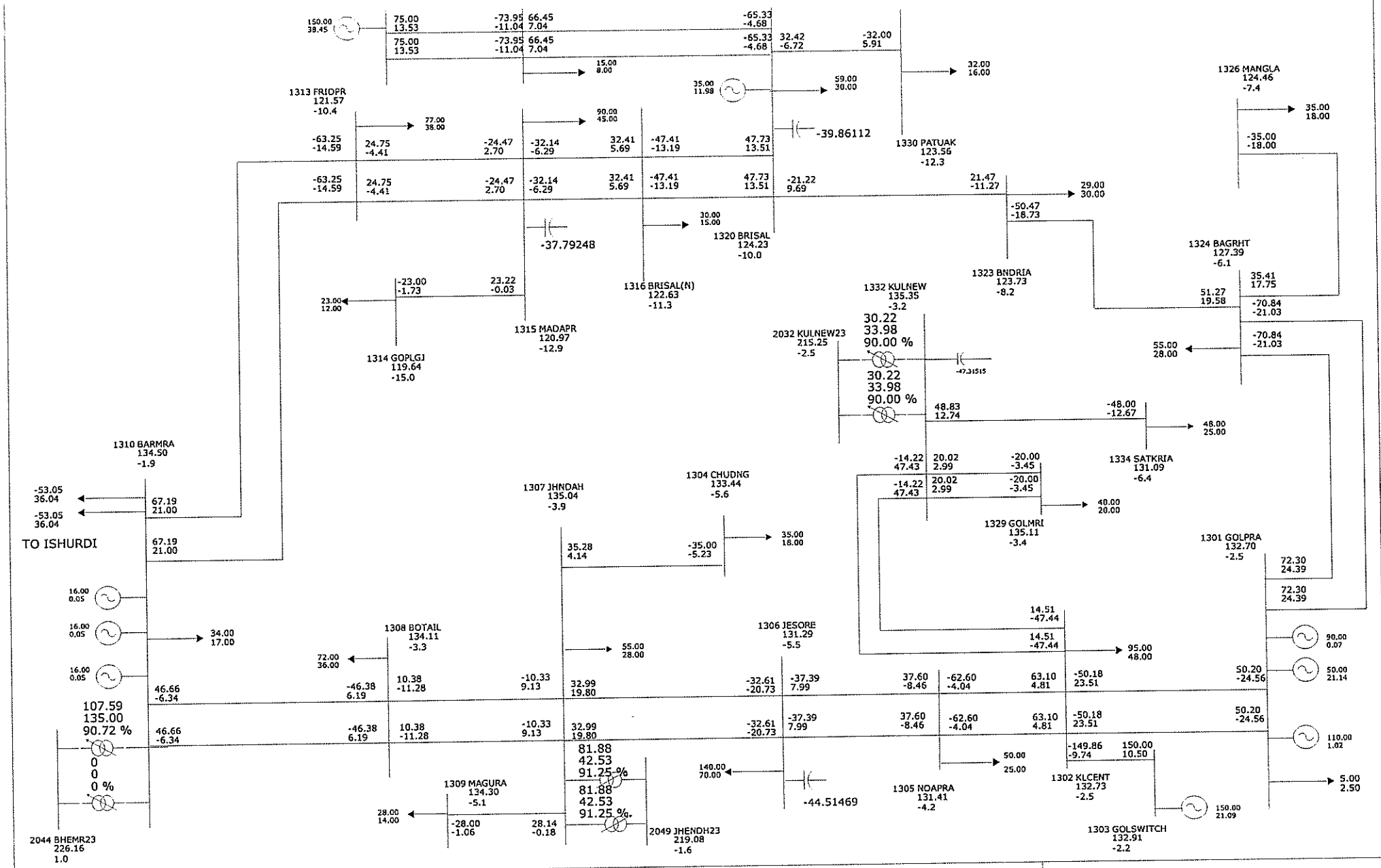

2012 Case IV with tripping Bheramara 230 kV one XFR: Considering all existing & planned lines, substations and generations up to the year 2012 including Bheramara 575 MW.

POWER GRID COMPANY OF BANGLADESH LTD.
Area: Western Zone

LEGEND:
1302 KLCENT — BUS ID / BUS NAME
1.035 — BUS BASE VOLTAGE in P.U.
-15.2 — BUS VOLTAGE ANGLE
74.33 — LINE FLOW MW
58.92 — LINE FLOW MVAR

Dy. Manager System Planning, PGCB.
Date:

Manager System Planning, PGCB.
Date:

20

LOAD FLOW STUDY REPORT

QF-SPL-15

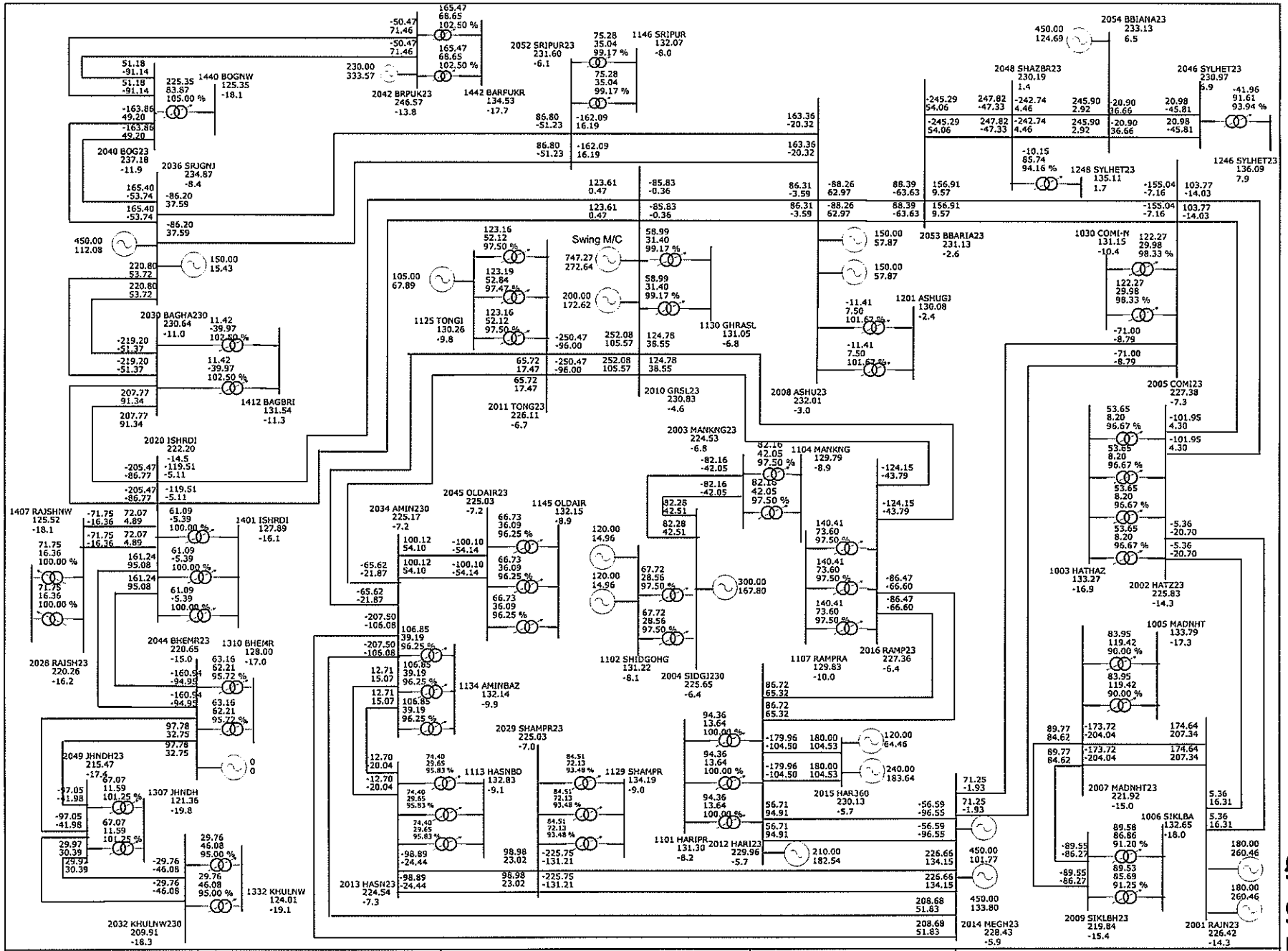

2012 CASE IV WITH TRIPPING BHERAMARA 575 MW: CONSIDERING ALL PLANNED LINES, SUBSTATION AND GENERATORS UP TO THE YEAR 2012.

POWER GRID COMPANY OF BANGLADESH LIMITED
AREA- 230KV SYSTEM

LEGEND:
2[illegible] HASN23 — BUS ID / BUS NAME
0.94 — BUS BASE VOLTAGE kV
-6.0 — BUS VOLTAGE ANGLE

GENERATION: 7775 MW AND 3752 MVAR
STATIC LOAD: 76[illegible] MW
SHUNT CAPTR.: 1072 MVAR LOSS: 165 MW

Dy. Manager, System Planning, PGCB
Date:

Manager, System Planning, PGCB
Date:

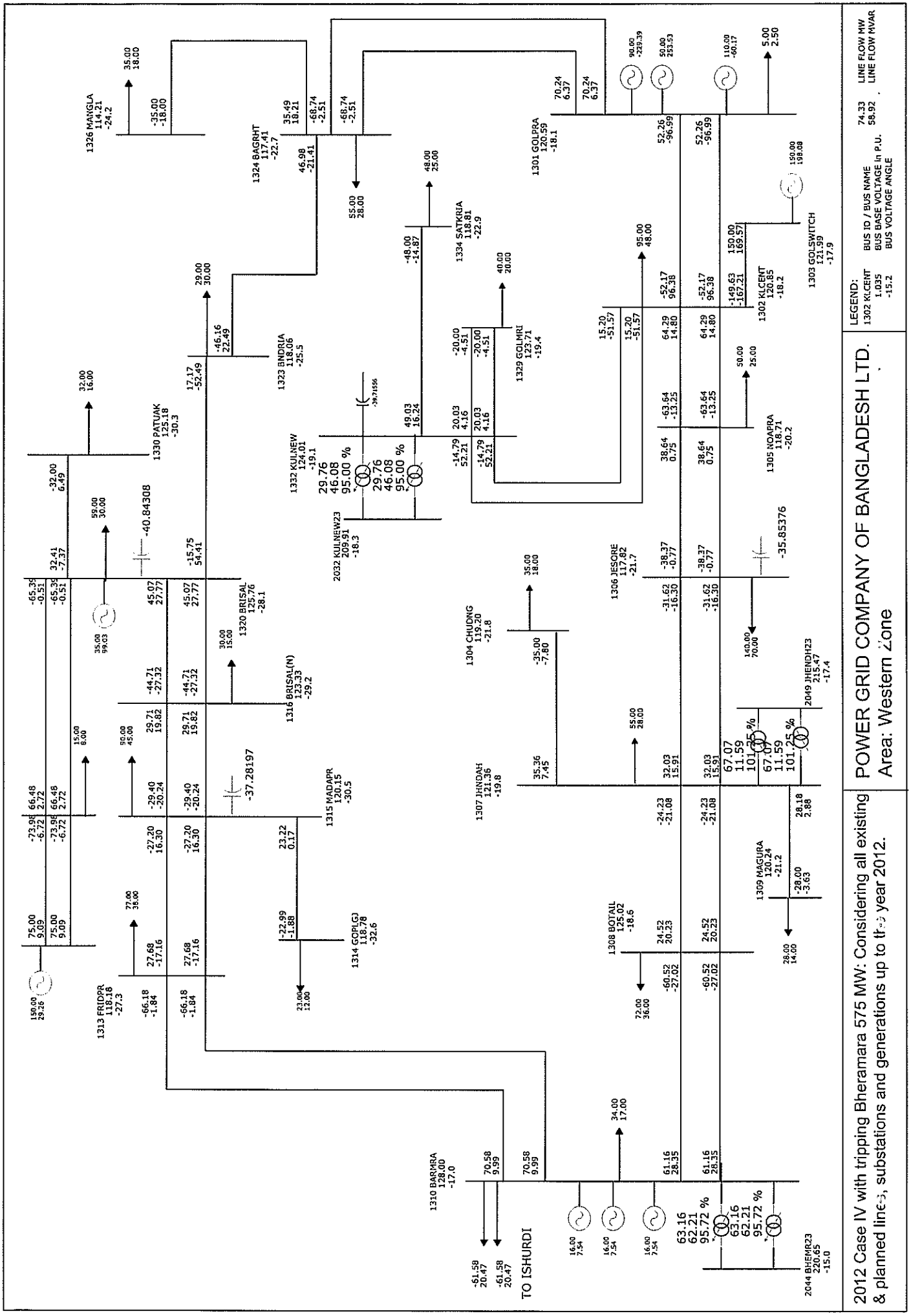

POWER GRID COMPANY OF BANGLADESH LTD.
Area: Western Zone

2012 Case IV with tripping Bheramara 575 MW: Considering all existing & planned lines, substations and generations up to the year 2012.

Dy. Manager System Planning, PGCB.
Date:

Manager System Planning, PGCB.
Date:

LOAD FLOW STUDY REPORT

QF-SPL-15

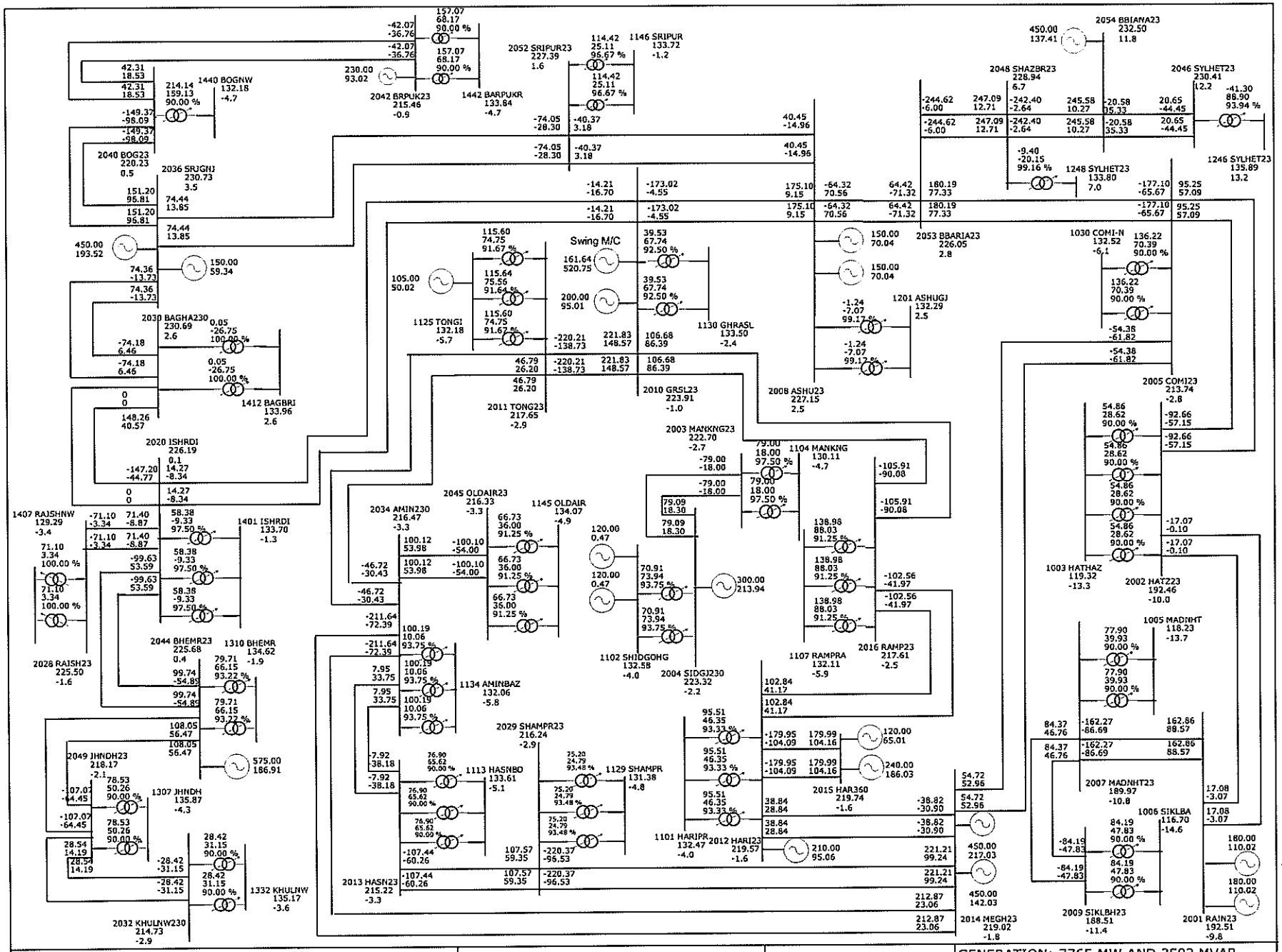

2012 CASE IV WITH TRIPPING ISHURDI-BAGHABARI ONE CIRCUIT: CONSIDERING ALL PLANNED LINES, SUBSTATION AND GENERATORS UP TO THE YEAR 2012 INCLUDING BHERAMARA 575 MW.

POWER GRID COMPANY OF BANGLADESH LIMITED
AREA- 230KV SYSTEM

LEGEND:

2013 HASN23	BUS ID / BUS NAME
0.94	BUS BASE VOLTAGE kV
-6.0	BUS VOLTAGE ANGLE

GENERATION: 7765 MW AND 3502 MVAR
STATIC LOAD: 7610 MW
SHUNT CAPTR.: 1119 MVAR LOSS: 155 MW

Dy. Manager, System Planning, PGCB
Date:

Manager, System Planning, PGCB
Date:

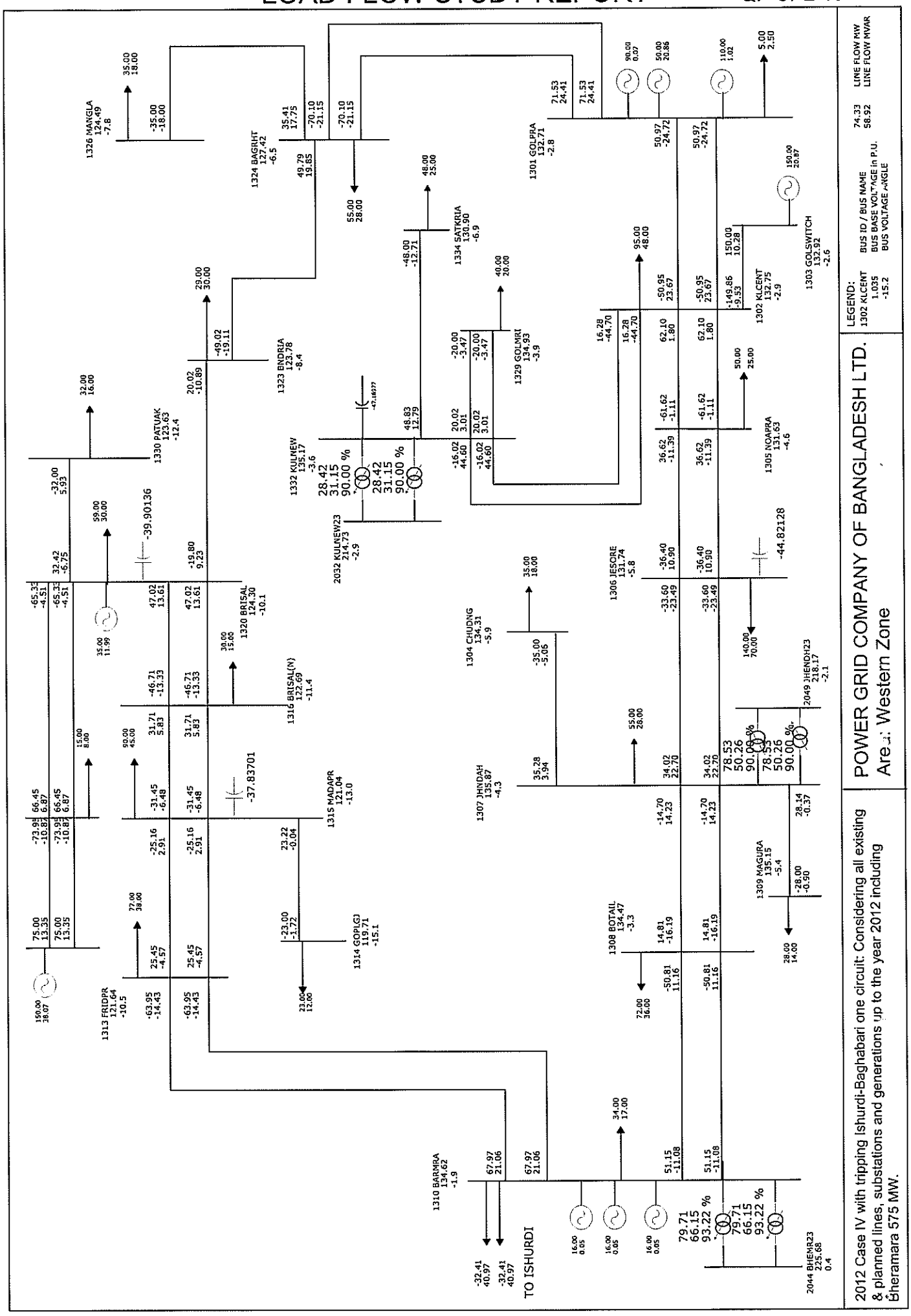

Manager System Planning, PGCB.
Date:

Dy. Manager System Planning, PGCB.
Date:

LOAD FLOW STUDY REPORT

QF-SPL-15

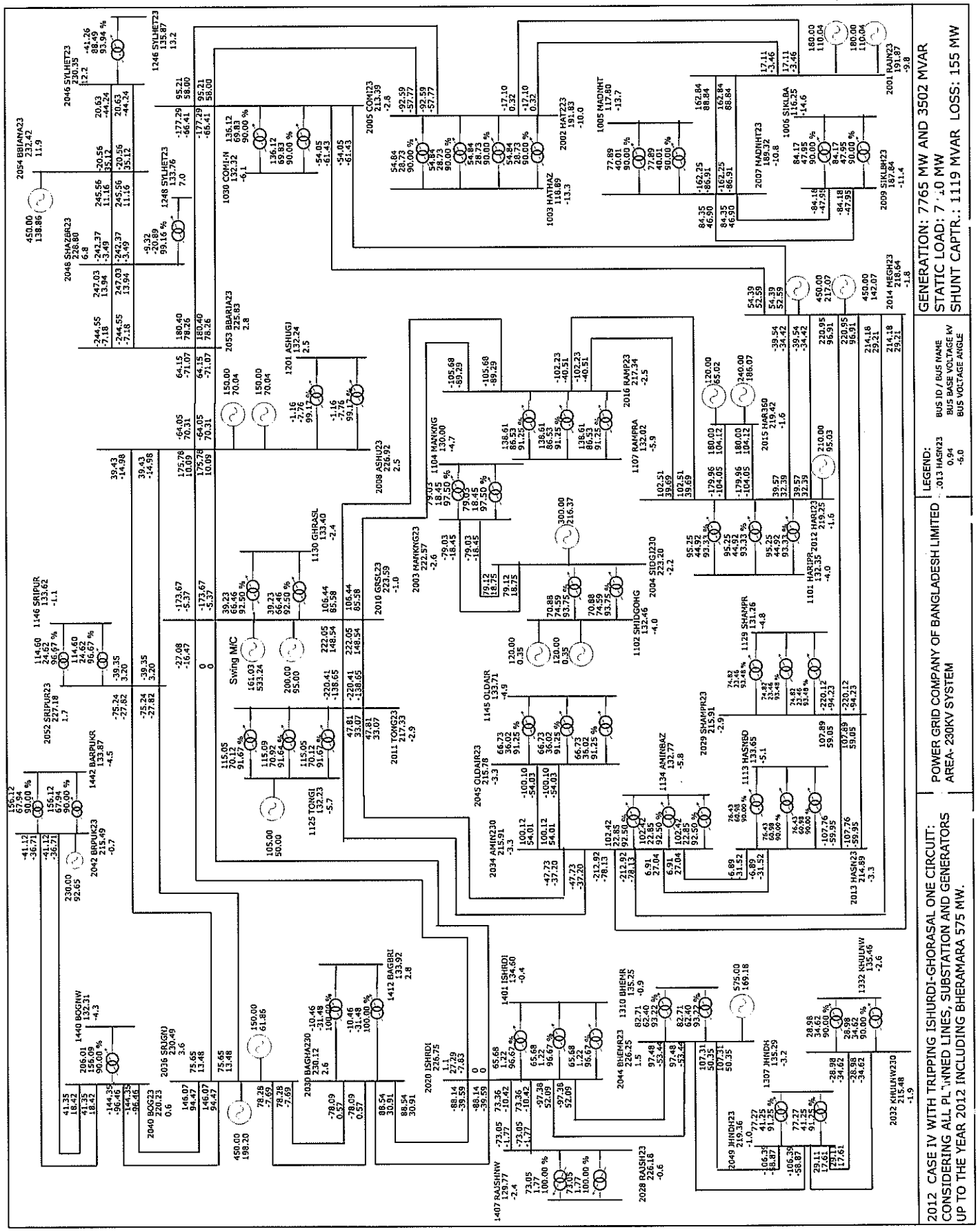

Manager, System Planning, PGCB
Date:

Dy. Manager, System Planning, PGCB
Date:

LOAD FLOW STUDY REPORT

QF-SPL-15

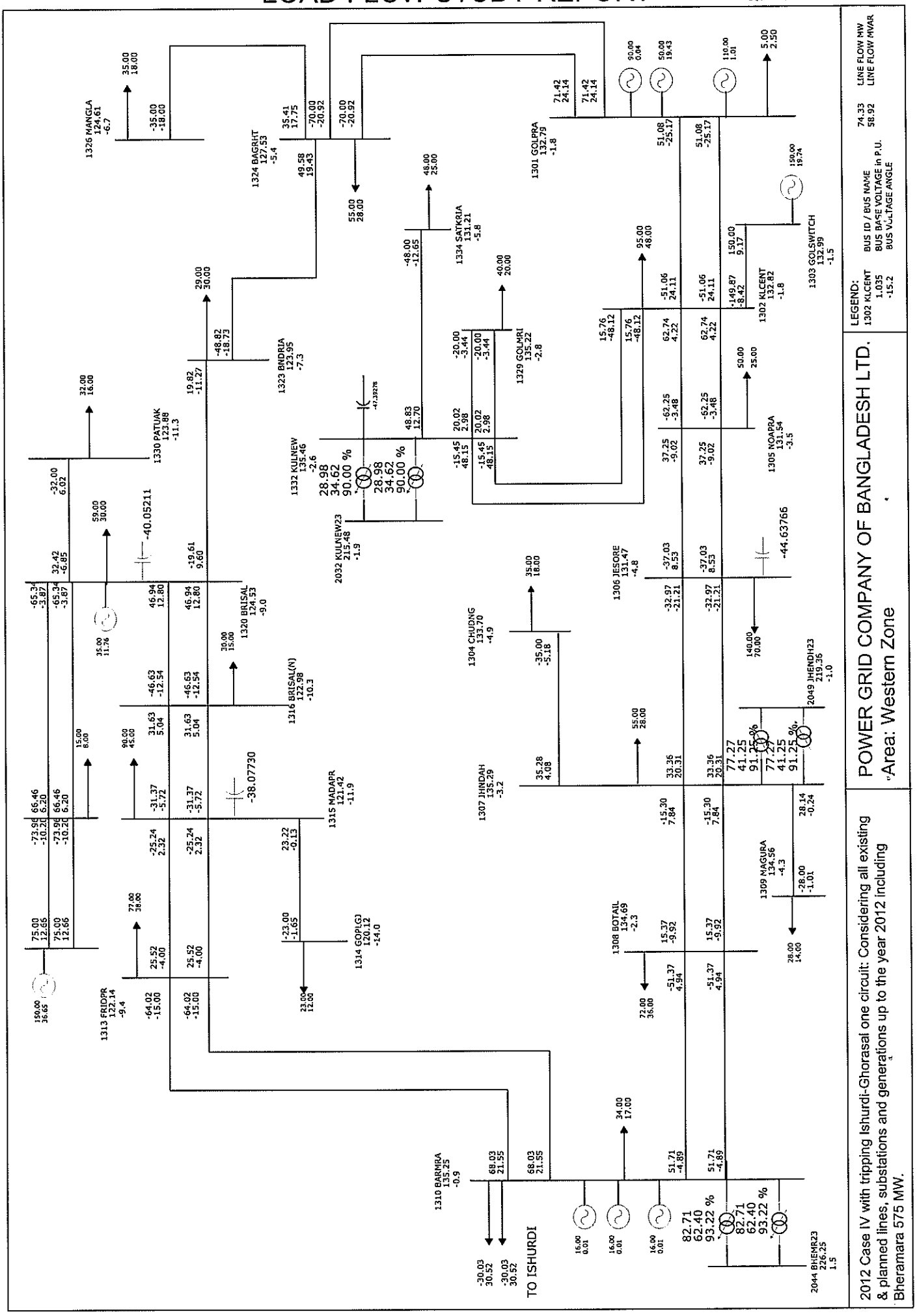

Manager System Planning, PGCB.
Date:

Dy. Manager System Planning, PGCB.
Date:

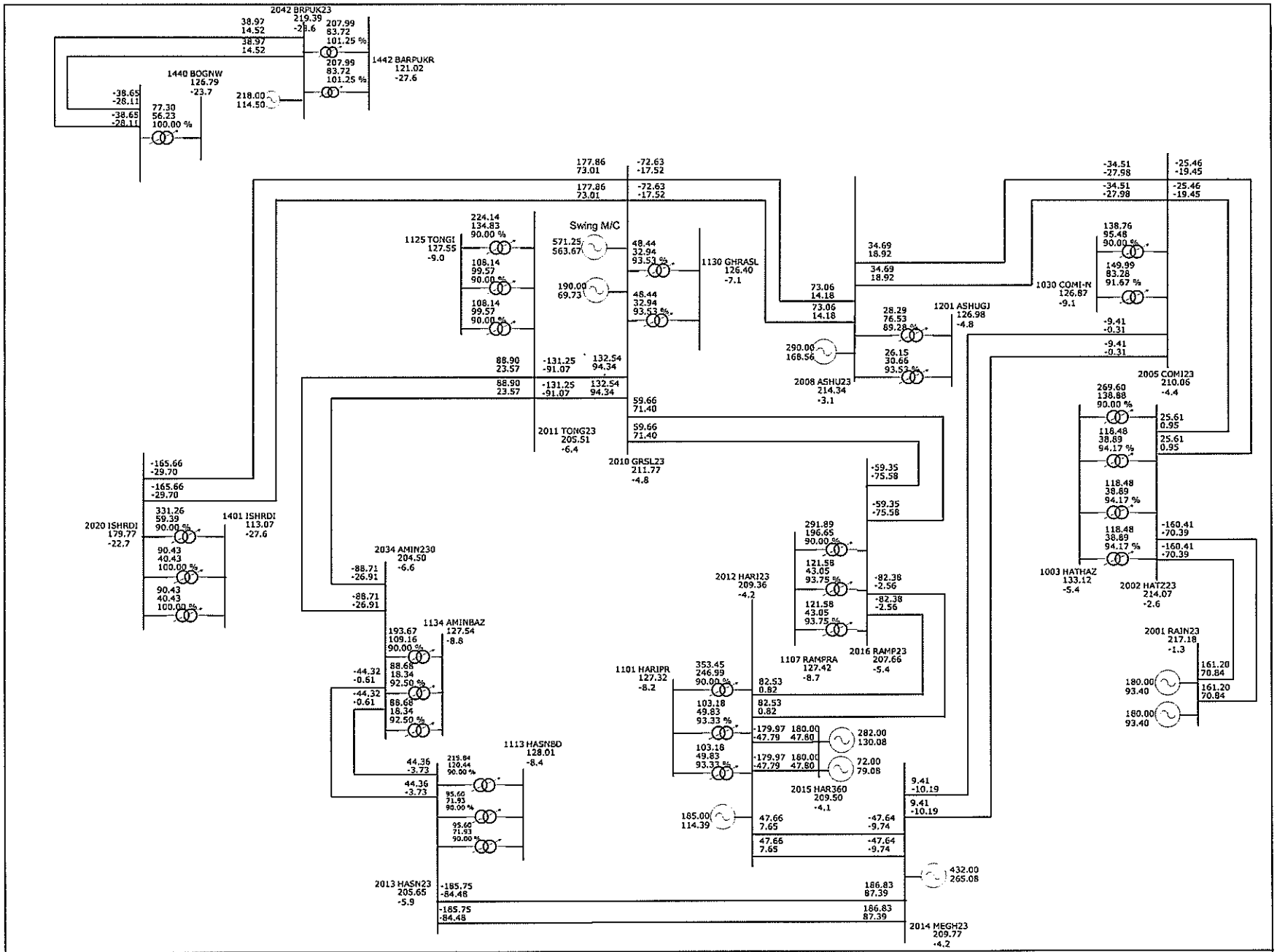

LOAD FLOW STUDY REPORT

QF-SPL-15

17th Sep 2007 Highest Generation 4130 MW Case : Considering all existing lines	POWER GRID COMPANY OF BANGLADESH LTD. Area: 230 kV System	GENERATION: 4065 MW AND 2348 MVAR STATIC LOAD: 3962 MW SHUNT LOAD: -331 MVAR LOSS: 103 MW

Dy. Manager, System Planning, PGCB.
Date:

Manager, System Planning, PGCB.
Date:

LOAD FLOW STUDY REPORT

QF-SPL-15

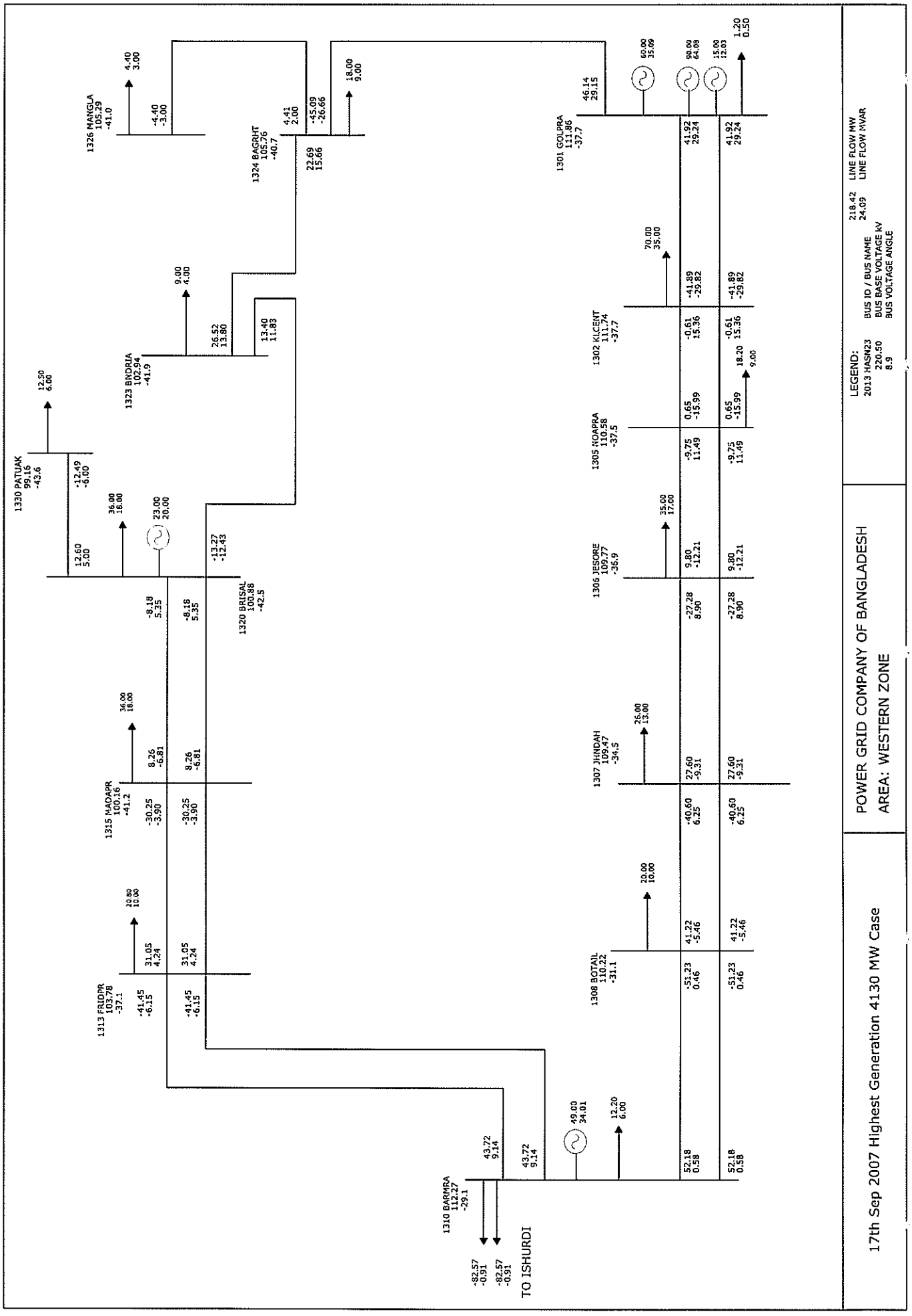

Manager, System Planning, PGCB.
Date:

Dy. Manager, System Planning, PGCB.
Date:

2012 Case I: Short Circuit Analysis Result

BUS ID	BUS NAME	VOLTAGE	THREE PHASE FAULT		SINGLE PHASE FAULT	
			KA	MVA	KA	MVA
1001	Kaptai	132	11.77	2690	13.07	2988
1002	Chandraghona	132	9.52	2175	9.94	2272
1003	Hathazari	132	16.79	3839	21.02	4806
1004	Baroirhat	132	9.57	2187	6.93	1583
1005	Modunaghat	132	16.27	3719	20.67	4724
1006	Sikalbaha	132	15.39	3519	19.35	4424
1008	Dohazari	132	6.75	1543	6.72	1536
1009	Cox's Bazar	132	2.87	655	2.61	597
1011	Halishahar	132	12.48	2852	13.7	3131
1012	Agrabad	132	12.75	2915	13.36	3053
1013	Kulshi	132	14.78	3378	17.75	4058
1014	AKSML	132	12.28	2806	12.1	2766
1015	Baraulia	132	13.54	3094	15.33	3504
1016	Bakulia	132	14.32	3274	17.14	3919
1017	Julda	132	13.32	3045	15.61	3569
1018	Shahmirpur	132	13.36	3054	15.76	3603
1019	Rangamati	132	4.79	1095	3.44	786
1020	Feni	132	8.56	1957	6.03	1377
1021	Chowmuhani	132	6.29	1438	4.75	1086
1022	Khagrachhari	132	1.92	439	1.53	349
1023	Ramganj	132	5.67	1296	4.34	992
1029	Chouddagram	132	8.92	2038	6.29	1438
1030	Comilla (N)	132	17.44	3988	20.35	4653
1031	Comilla (S)	132	8.06	1843	7.89	1804
1032	Chandpur	132	6.17	1409	6.1	1394
1033	Daudkandi	132	13.64	3117	13.89	3176
1101	Haripur	132	28.95	6617	37.58	8591
1102	Siddhirganj	132	27.42	6267	35.11	8027
1103	Moghbazar	132	18.38	4202	20.63	4717
1104	Maniknagar	132	16.9	3863	18.72	4280
1105	Ullon	132	21.97	5023	25.6	5852
1106	Dhanmondi	132	18.19	4159	19.95	4561
1107	Rampura	132	23.36	5340	28.63	6546
1108	Narinda	132	14.94	3416	16.01	3660
1109	Matuail	132	18.09	4137	19.74	4513
1110	Bangabhaban	132	15.54	3553	15.9	3635
1111	Shyampur	132	17.36	3968	20.63	4715
1112	Madanganj	132	21.32	4875	24.22	5537
1113	Hasnabad	132	21.51	4918	26.74	6112
1114	Sitalakhya	132	19.93	4557	23.31	5328
1115	Meghnaghat	132	14.9	3407	15.28	3494
1116	Gulshan	132	16.43	3756	17.85	4082
1117	Munsiganj	132	10.13	2315	9.82	2245
1118	Kamrangirchar	132	14.2	3246	15	3429
1120	Mirpur	132	19.69	4502	22.21	5076
1121	New Tongi	132	23.02	5264	25.93	5928
1122	Kalyanpur	132	19.99	4571	23.69	5417
1123	Uttara	132	19.08	4363	21.23	4854
1124	Bashundhara	132	21.27	4863	24.08	5505
1125	Tongi	132	24.47	5595	29.55	6755
1126	Kabirpur	132	16.25	3714	16.51	3775
1127	Manikganj	132	7.75	1771	7.18	1640
1128	Tangail	132	5.22	1194	4.71	1077
1129	Shyampur230	132	19.06	4357	23.54	5381

2012 Case I: Short Circuit Analysis Result

BUS ID	BUS NAME	VOLTAGE	THREE PHASE FAULT		SINGLE PHASE FAULT	
			KA	MVA	KA	MVA
1130	Ghorasal	132	24.59	5621	28.05	6412
1131	Narsingdi	132	13.52	3091	13.24	3028
1132	Joydebpur	132	17.6	4024	18.19	4158
1133	Bhulta	132	11.71	2678	11.26	2573
1134	Aminbazar	132	21.4	4893	26.46	6048
1135	Savar	132	13.79	3152	14.72	3365
1136	Purbachal	132	17.66	4037	18.59	4251
1140	Madartek	132	20.85	4767	24.43	5585
1141	Mohammadpur	132	16.78	3835	18.93	4327
1142	Dhaka University	132	10.82	2473	12.52	2862
1143	Cantonment	132	10.97	2508	12.76	2916
1144	Bashundhara	132	20.17	4610	21.61	4941
1145	Old Airport	132	13.19	3015	16.53	3779
1146	Modhupur	132	14.05	3211	16.59	3792
1201	Ashuganj	132	24.93	5700	28.38	6489
1202	Kishoreganj	132	6.88	1572	6.85	1565
1203	Mymensingh	132	4.49	1026	5.17	1183
1204	Jamalpur	132	2.74	626	2.78	636
1205	Netrakona	132	3.22	735	3.38	772
1206	Bhaluka	132	3.06	700	2.61	596
1207	Sherpur	132	2.26	516	1.99	455
1210	B.Baria	132	16.62	3799	16.99	3883
1211	Shahjibazar	132	15.13	3460	16.87	3856
1212	Sreemangal	132	8.99	2055	7.61	1739
1213	Fenchuganj	132	9.28	2120	9.41	2150
1214	Fenchuganj P/S	132	9.55	2183	9.87	2256
1215	Sylhet	132	9.49	2170	9.84	2250
1216	Chhatak	132	5.31	1213	5.04	1151
1246	Sylhet New	132	10.44	2385	11.78	2693
1248	Shahjibazar New	132	15.07	3444	16.84	3850
1301	Goalpara	132	9.15	2090	10.57	2417
1302	Khulna Central	132	9.29	2124	10.79	2467
1303	Goalpara Switching	132	8.99	2055	9.83	2248
1304	Chuadanga	132	3.27	748	3.12	713
1305	Noapara	132	7.64	1745	8.16	1864
1306	Jessore	132	7.23	1653	7.6	1738
1307	Jhenaidah	132	10.19	2328	12.78	2921
1308	Kushtia (Bottail)	132	10.26	2346	11.14	2546
1309	Magura	132	3.71	849	3.6	822
1310	Bheramara	132	15.82	3617	19.93	4557
1313	Faridpur	132	4.47	1022	3.93	898
1314	Gopalganj	132	1.83	418	1.55	353
1315	Madaripur	132	4.26	974	3.55	810
1316	Barisal (N)	132	4.68	1070	3.97	907
1320	Barisal	132	5.17	1181	4.77	1091
1323	Bandaria	132	4.23	966	3.9	891
1324	Bagherhat	132	5.54	1265	5.43	1240
1326	Mongla	132	2.85	652	2.61	597
1328	Bhola	132	4.8	1098	4.14	946
1329	Gollamari	132	6.92	1582	8.13	1857
1330	Patuakhali	132	2.29	523	2.03	463
1331	Burhanuddin	132	4.93	1128	4.78	1091
1332	Khulna (S)	132	8.42	1925	10.76	2459
1334	Satkhira	132	2.38	544	2.25	514
1401	Ishurdi	132	16.83	3848	21.64	4948

2012 Case I: Short Circuit Analysis Result

BUS ID	BUS NAME	VOLTAGE	THREE PHASE FAULT		SINGLE PHASE FAULT	
			KA	MVA	KA	MVA
1403	Natore	132	10.92	2496	11.65	2664
1404	Niamatpur	132	2.16	493	1.95	445
1405	Rajshahi	132	8.47	1937	9.12	2084
1406	Chapai Nowabganj	132	4.77	1091	3.75	856
1407	Rajshahi New	132	8.79	2010	10.94	2502
1410	Pabna	132	9.05	2068	9.21	2104
1411	Shahjadpur	132	13.01	2973	14.81	3387
1412	Baghabari	132	15.17	3468	18.67	4268
1413	Sirajganj	132	8.44	1928	8.48	1938
1415	Bogra	132	10.34	2364	11.65	2664
1416	Joypurhat	132	2.37	542	2.15	492
1417	Noagaon	132	4.69	1071	4.51	1029
1418	Palashbari	132	6.36	1454	6.47	1479
1420	Rangpur	132	6.63	1515	7.44	1700
1421	Lalmonirhat	132	2.87	655	2.73	625
1425	Saidpur	132	5.96	1362	6.72	1537
1430	Purbashadipur	132	4.51	1030	4.72	1079
1431	Panchagar	132	1.76	402	1.62	371
1432	Thakurgaon	132	2.99	683	2.91	665
1440	Boga New	132	10.18	2328	11.71	2677
1442	Barapukuria	132	7.69	1757	9.88	2259
2001	Raojan	230	10.41	4147	12.08	4811
2002	Hathazari	230	10.33	4115	11.99	4777
2003	Maniknagar	230	7.88	3139	9	3583
2004	Siddhirganj	230	8.00	3185	9.32	3713
2005	Comilla (N)	230	16.03	6387	17.58	7004
2007	Modunaghat	230	9.68	3854	11.61	4623
2008	Ashuganj	230	20.96	8349	23.16	9225
2009	Sikalbaha	230	8.76	3491	10.44	4160
2010	Ghorasal	230	21.79	8680	26.8	10677
2011	Tongi	230	18.48	7360	22.07	8791
2012	Haripur	230	20.82	8292	26.1	10396
2013	Hasnabad	230	17.09	6806	21.33	8496
2014	Meghnaghat	230	20.93	8337	26.55	10576
2015	Haripur 360	230	20.49	8162	25.45	10140
2016	Rampura	230	18	7171	21.52	8572
2020	Ishurdi	230	12.21	4863	15.3	6095
2028	Rajshahi	230	6.94	2765	7.68	3060
2029	Shyampur	230	17.7	7053	22.17	8830
2030	Baghabari	230	12.28	4891	14.37	5725
2032	Khulna (S)	230	5.3	2112	6.44	2564
2034	Aminbazar	230	18.89	7524	24.18	9632
2036	Sirajganj	230	13.4	5337	15.06	5998
2040	Bogra	230	8.67	3453	9.75	3884
2042	Barapukuria	230	6.06	2413	7.42	2954
2044	Bheramara	230	11.57	4609	14.42	5744
2045	Old Airport	230	18.35	7309	23.06	9186
2046	Sylhet	230	6.89	2745	6.84	2725
2048	Shahjibazar	230	12.21	4865	11.32	4510
2049	Jhenaidah	230	7.54	3003	9.18	3657
2052	Sripur	230	14	5577	15.35	6114
2053	B.Baria	230	18.73	7460	19.24	7662
2054	Bibiyana	230	8.43	3357	8.7	3465

2012 Case II: Short Circuit Analysis Result

BUS ID	BUS NAME	VOLTAGE	THREE PHASE FAULT		SINGLE PHASE FAULT	
			KA	MVA	KA	MVA
1001	Kaptai	132	11.77	2690	13.07	2988
1002	Chandraghona	132	9.52	2175	9.94	2272
1003	Hathazari	132	16.79	3839	21.02	4806
1004	Baroirhat	132	9.57	2187	6.93	1583
1005	Modunaghat	132	16.27	3719	20.67	4724
1006	Sikalbaha	132	15.39	3519	19.35	4424
1008	Dohazari	132	6.75	1543	6.72	1536
1009	Cox's Bazar	132	2.87	655	2.61	597
1011	Halishahar	132	12.48	2852	13.7	3131
1012	Agrabad	132	12.75	2915	13.36	3053
1013	Kulshi	132	14.78	3378	17.75	4058
1014	AKSML	132	12.28	2806	12.1	2766
1015	Baraulia	132	13.54	3094	15.33	3504
1016	Bakulia	132	14.32	3274	17.14	3919
1017	Julda	132	13.32	3045	15.61	3569
1018	Shahmirpur	132	13.36	3054	15.76	3603
1019	Rangamati	132	4.79	1095	3.44	786
1020	Feni	132	8.56	1957	6.03	1377
1021	Chowmuhani	132	6.29	1438	4.75	1086
1022	Khagrachhari	132	1.92	439	1.53	349
1023	Ramganj	132	5.67	1296	4.34	992
1029	Chouddagram	132	8.92	2038	6.29	1438
1030	Comilla (N)	132	17.44	3988	20.35	4653
1031	Comilla (S)	132	8.06	1843	7.89	1804
1032	Chandpur	132	6.17	1409	6.1	1394
1033	Daudkandi	132	13.64	3117	13.89	3176
1101	Haripur	132	28.95	6617	37.58	8591
1102	Siddhirganj	132	27.42	6267	35.11	8027
1103	Moghbazar	132	18.38	4202	20.63	4717
1104	Maniknagar	132	16.9	3863	18.72	4280
1105	Ullon	132	21.97	5023	25.6	5852
1106	Dhanmondi	132	18.19	4159	19.95	4561
1107	Rampura	132	23.36	5340	28.63	6546
1108	Narinda	132	14.94	3416	16.01	3660
1109	Matuail	132	18.09	4137	19.74	4513
1110	Bangabhaban	132	15.54	3553	15.9	3635
1111	Shyampur	132	17.36	3968	20.63	4715
1112	Madanganj	132	21.32	4875	24.22	5537
1113	Hasnabad	132	21.51	4918	26.74	6112
1114	Sitalakhya	132	19.93	4557	23.31	5328
1115	Meghnaghat	132	14.9	3407	15.28	3494
1116	Gulshan	132	16.43	3756	17.85	4082
1117	Munsiganj	132	10.13	2315	9.82	2245
1118	Kamrangirchar	132	14.2	3246	15	3429
1120	Mirpur	132	19.69	4502	22.21	5076
1121	New Tongi	132	23.02	5264	25.93	5928
1122	Kalyanpur	132	19.99	4571	23.69	5417
1123	Uttara	132	19.08	4363	21.23	4854
1124	Bashundhara	132	21.27	4863	24.08	5505
1125	Tongi	132	24.47	5595	29.55	6755
1126	Kabirpur	132	16.25	3714	16.51	3775
1127	Manikganj	132	7.75	1771	7.18	1640
1128	Tangail	132	5.22	1194	4.71	1077
1129	Shyampur230	132	19.06	4357	23.54	5381

2012 Case II: Short Circuit Analysis Result

BUS ID	BUS NAME	VOLTAGE	THREE PHASE FAULT		SINGLE PHASE FAULT	
			KA	MVA	KA	MVA
1130	Ghorasal	132	24.59	5621	28.05	6412
1131	Narsingdi	132	13.52	3091	13.24	3028
1132	Joydebpur	132	17.6	4024	18.19	4158
1133	Bhulta	132	11.71	2678	11.26	2573
1134	Aminbazar	132	21.4	4893	26.46	6048
1135	Savar	132	13.79	3152	14.72	3365
1136	Purbachal	132	17.66	4037	18.59	4251
1140	Madartek	132	20.85	4767	24.43	5585
1141	Mohammadpur	132	16.78	3835	18.93	4327
1142	Dhaka University	132	10.82	2473	12.52	2862
1143	Cantonment	132	10.97	2508	12.76	2916
1144	Bashundhara	132	20.17	4610	21.61	4941
1145	Old Airport	132	13.19	3015	16.53	3779
1146	Modhupur	132	14.05	3211	16.59	3792
1201	Ashuganj	132	24.93	5700	28.38	6489
1202	Kishoreganj	132	6.88	1572	6.85	1565
1203	Mymensingh	132	4.49	1026	5.17	1183
1204	Jamalpur	132	2.74	626	2.78	636
1205	Netrakona	132	3.22	735	3.38	772
1206	Bhaluka	132	3.06	700	2.61	596
1207	Sherpur	132	2.26	516	1.99	455
1210	B.Baria	132	16.62	3799	16.99	3883
1211	Shahjibazar	132	15.13	3460	16.87	3856
1212	Sreemangal	132	8.99	2055	7.61	1739
1213	Fenchuganj	132	9.28	2120	9.41	2150
1214	Fenchuganj P/S	132	9.55	2183	9.87	2256
1215	Sylhet	132	9.49	2170	9.84	2250
1216	Chhatak	132	5.31	1213	5.04	1151
1246	Sylhet New	132	10.44	2385	11.78	2693
1248	Shahjibazar New	132	15.07	3444	16.84	3850
1301	Goalpara	132	9.15	2090	10.57	2417
1302	Khulna Central	132	9.29	2124	10.79	2467
1303	Goalpara Switching	132	8.99	2055	9.83	2248
1304	Chuadanga	132	3.27	748	3.12	713
1305	Noapara	132	7.64	1745	8.16	1864
1306	Jessore	132	7.23	1653	7.6	1738
1307	Jhenaidah	132	10.19	2328	12.78	2921
1308	Kushtia (Bottail)	132	10.26	2346	11.14	2546
1309	Magura	132	3.71	849	3.6	822
1310	Bheramara	132	15.82	3617	19.93	4557
1313	Faridpur	132	4.47	1022	3.93	898
1314	Gopalganj	132	1.83	418	1.55	353
1315	Madaripur	132	4.26	974	3.55	810
1316	Barisal (N)	132	4.68	1070	3.97	907
1320	Barisal	132	5.17	1181	4.77	1091
1323	Bandaria	132	4.23	966	3.9	891
1324	Bagherhat	132	5.54	1265	5.43	1240
1326	Mongla	132	2.85	652	2.61	597
1328	Bhola	132	4.8	1098	4.14	946
1329	Gollamari	132	6.92	1582	8.13	1857
1330	Patuakhali	132	2.29	523	2.03	463
1331	Burhanuddin	132	4.93	1128	4.78	1091
1332	Khulna (S)	132	8.42	1925	10.76	2459
1334	Satkhira	132	2.38	544	2.25	514

2012 Case II: Short Circuit Analysis Result

BUS ID	BUS NAME	VOLTAGE	THREE PHASE FAULT		SINGLE PHASE FAULT	
			KA	MVA	KA	MVA
1401	Ishurdi	132	16.83	3848	21.64	4948
1403	Natore	132	10.92	2496	11.65	2664
1404	Niamatpur	132	2.16	493	1.95	445
1405	Rajshahi	132	8.47	1937	9.12	2084
1406	Chapai Nowabganj	132	4.77	1091	3.75	856
1407	Rajshahi New	132	8.79	2010	10.94	2502
1410	Pabna	132	9.05	2068	9.21	2104
1411	Shahjadpur	132	13.01	2973	14.81	3387
1412	Baghabari	132	15.17	3468	18.67	4268
1413	Sirajganj	132	8.44	1928	8.48	1938
1415	Bogra	132	10.34	2364	11.65	2664
1416	Joypurhat	132	2.37	542	2.15	492
1417	Noagaon	132	4.69	1071	4.51	1029
1418	Palashbari	132	6.36	1454	6.47	1479
1420	Rangpur	132	6.63	1515	7.44	1700
1421	Lalmonirhat	132	2.87	655	2.73	625
1425	Saidpur	132	5.96	1362	6.72	1537
1430	Purbashadipur	132	4.51	1030	4.72	1079
1431	Panchagar	132	1.76	402	1.62	371
1432	Thakurgaon	132	2.99	683	2.91	665
1440	Boga New	132	10.18	2328	11.71	2677
1442	Barapukuria	132	7.69	1757	9.88	2259
2001	Raojan	230	10.41	4147	12.08	4811
2002	Hathazari	230	10.33	4115	11.99	4777
2003	Maniknagar	230	7.88	3139	9	3583
2004	Siddhirganj	230	8	3185	9.32	3713
2005	Comilla (N)	230	16.03	6387	17.58	7004
2007	Modunaghat	230	9.68	3854	11.61	4623
2008	Ashuganj	230	20.96	8349	23.16	9225
2009	Sikalbaha	230	8.76	3491	10.44	4160
2010	Ghorasal	230	21.79	8680	26.8	10677
2011	Tongi	230	18.48	7360	22.07	8791
2012	Haripur	230	20.82	8292	26.1	10396
2013	Hasnabad	230	17.09	6806	21.33	8496
2014	Meghnaghat	230	20.93	8337	26.55	10576
2015	Haripur 360	230	20.49	8162	25.45	10140
2016	Rampura	230	18	7171	21.52	8572
2020	Ishurdi	230	12.21	4863	15.3	6095
2028	Rajshahi	230	6.94	2765	7.68	3060
2029	Shyampur	230	17.7	7053	22.17	8830
2030	Baghabari	230	12.28	4891	14.37	5725
2032	Khulna (S)	230	5.3	2112	6.44	2564
2034	Aminbazar	230	18.89	7524	24.18	9632
2036	Sirajganj	230	13.4	5337	15.06	5998
2040	Bogra	230	8.67	3453	9.75	3884
2042	Barapukuria	230	6.06	2413	7.42	2954
2044	Bheramara	230	11.57	4609	14.42	5744
2045	Old Airport	230	18.35	7309	23.06	9186
2046	Sylhet	230	6.89	2745	6.84	2725
2048	Shahjibazar	230	12.21	4865	11.32	4510
2049	Jhenaidah	230	7.54	3003	9.18	3657
2052	Sripur	230	14	5577	15.35	6114
2053	B.Baria	230	18.73	7460	19.24	7662
2054	Bibiyana	230	8.43	3357	8.7	3465

2012 Case III: Short Circuit Analysis Result

BUS ID	BUS NAME	VOLTAGE	THREE PHASE FAULT		SINGLE PHASE FAULT	
			KA	MVA	KA	MVA
1001	Kaptai	132	11.77	2690	13.07	2988
1002	Chandraghona	132	9.52	2175	9.94	2272
1003	Hathazari	132	16.79	3839	21.02	4806
1004	Baroirhat	132	9.57	2187	6.93	1583
1005	Modunaghat	132	16.27	3719	20.67	4725
1006	Sikalbaha	132	15.39	3519	19.35	4424
1008	Dohazari	132	6.75	1543	6.72	1536
1009	Cox's Bazar	132	2.87	655	2.61	597
1011	Halishahar	132	12.48	2852	13.7	3132
1012	Agrabad	132	12.75	2915	13.36	3053
1013	Kulshi	132	14.78	3378	17.75	4058
1014	AKSML	132	12.28	2806	12.1	2766
1015	Baraulia	132	13.54	3094	15.33	3504
1016	Bakulia	132	14.32	3274	17.14	3919
1017	Julda	132	13.32	3045	15.61	3569
1018	Shahmirpur	132	13.36	3054	15.76	3603
1019	Rangamati	132	4.79	1095	3.44	786
1020	Feni	132	8.56	1957	6.03	1377
1021	Chowmuhani	132	6.29	1438	4.75	1086
1022	Khagrachhari	132	1.92	439	1.53	349
1023	Ramganj	132	5.67	1296	4.34	992
1029	Chouddagram	132	8.92	2038	6.29	1438
1030	Comilla (N)	132	17.44	3988	20.35	4653
1031	Comilla (S)	132	8.06	1844	7.89	1804
1032	Chandpur	132	6.17	1409	6.1	1394
1033	Daudkandi	132	13.64	3117	13.89	3176
1101	Haripur	132	28.95	6618	37.58	8592
1102	Siddhirganj	132	27.42	6268	35.12	8028
1103	Moghbazar	132	18.38	4202	20.64	4718
1104	Maniknagar	132	16.9	3864	18.73	4281
1105	Ullon	132	21.98	5024	25.6	5852
1106	Dhanmondi	132	18.19	4159	19.95	4561
1107	Rampura	132	23.36	5341	28.64	6546
1108	Narinda	132	14.94	3416	16.01	3660
1109	Matuail	132	18.1	4137	19.74	4514
1110	Bangabhaban	132	15.54	3553	15.9	3636
1111	Shyampur	132	17.36	3968	20.63	4716
1112	Madanganj	132	21.33	4875	24.22	5538
1113	Hasnabad	132	21.51	4918	26.74	6113
1114	Sitalakhya	132	19.93	4557	23.31	5328
1115	Meghnaghat	132	14.9	3407	15.29	3494
1116	Gulshan	132	16.43	3756	17.86	4082
1117	Munsiganj	132	10.13	2316	9.82	2245
1118	Kamrangirchar	132	14.2	3246	15	3429
1120	Mirpur	132	19.7	4503	22.21	5077
1121	New Tongi	132	23.03	5265	25.93	5929
1122	Kalyanpur	132	20	4571	23.7	5417
1123	Uttara	132	19.09	4363	21.24	4855
1124	Bashundhara	132	21.27	4864	24.08	5506
1125	Tongi	132	24.48	5596	29.55	6756
1126	Kabirpur	132	16.25	3714	16.52	3776
1127	Manikganj	132	7.75	1771	7.18	1640
1128	Tangail	132	5.22	1194	4.71	1077
1129	Shyampur230	132	19.06	4357	23.54	5382

2012 Case III: Short Circuit Analysis Result

BUS ID	BUS NAME	VOLTAGE	THREE PHASE FAULT		SINGLE PHASE FAULT	
			KA	MVA	KA	MVA
1130	Ghorasal	132	24.59	5622	28.05	6413
1131	Narsingdi	132	13.52	3091	13.25	3028
1132	Joydebpur	132	17.6	4024	18.19	4158
1133	Bhulta	132	11.72	2678	11.26	2573
1134	Aminbazar	132	21.41	4893	26.46	6049
1135	Savar	132	13.79	3152	14.72	3365
1136	Purbachal	132	17.66	4037	18.6	4251
1140	Madartek	132	20.85	4768	24.43	5586
1141	Mohammadpur	132	16.78	3835	18.93	4327
1142	Dhaka University	132	10.82	2473	12.52	2862
1143	Cantonment	132	10.97	2508	12.76	2917
1144	Bashundhara	132	20.17	4611	21.62	4942
1145	Old Airport	132	13.19	3015	16.53	3779
1146	Modhupur	132	14.05	3212	16.59	3793
1201	Ashuganj	132	24.94	5701	28.39	6489
1202	Kishoreganj	132	6.88	1572	6.85	1565
1203	Mymensingh	132	4.49	1026	5.18	1183
1204	Jamalpur	132	2.74	626	2.78	636
1205	Netrakona	132	3.22	735	3.38	772
1206	Bhaluka	132	3.06	700	2.61	596
1207	Sherpur	132	2.26	516	1.99	455
1210	B.Baria	132	16.62	3799	16.99	3883
1211	Shahjibazar	132	15.13	3460	16.87	3856
1212	Sreemangal	132	8.99	2055	7.61	1739
1213	Fenchuganj	132	9.28	2120	9.41	2150
1214	Fenchuganj P/S	132	9.55	2183	9.87	2256
1215	Sylhet	132	9.49	2170	9.84	2250
1216	Chhatak	132	5.31	1213	5.04	1151
1246	Sylhet New	132	10.44	2385	11.78	2693
1248	Shahjibazar New	132	15.07	3444	16.84	3850
1301	Goalpara	132	9.15	2092	10.58	2418
1302	Khulna Central	132	9.3	2126	10.8	2469
1303	Goalpara Switching	132	9	2056	9.84	2249
1304	Chuadanga	132	3.27	748	3.12	713
1305	Noapara	132	7.64	1746	8.16	1865
1306	Jessore	132	7.24	1654	7.61	1739
1307	Jhenaidah	132	10.2	2332	12.79	2925
1308	Kushtia (Bottail)	132	10.28	2349	11.15	2549
1309	Magura	132	3.72	849	3.6	822
1310	Bheramara	132	15.86	3626	19.98	4566
1313	Faridpur	132	4.47	1023	3.93	898
1314	Gopalganj	132	1.83	418	1.55	353
1315	Madaripur	132	4.26	974	3.55	810
1316	Barisal (N)	132	4.68	1071	3.97	907
1320	Barisal	132	5.17	1181	4.77	1091
1323	Bandaria	132	4.23	966	3.9	891
1324	Bagherhat	132	5.54	1266	5.43	1240
1326	Mongla	132	2.85	652	2.61	597
1328	Bhola	132	4.8	1098	4.14	946
1329	Gollamari	132	6.93	1583	8.13	1859
1330	Patuakhali	132	2.29	523	2.03	463
1331	Burhanuddin	132	4.93	1128	4.78	1091
1332	Khulna (S)	132	8.43	1927	10.76	2460
1334	Satkhira	132	2.38	545	2.25	514
1401	Ishurdi	132	16.87	3857	21.69	4958

2012 Case III: Short Circuit Analysis Result

BUS ID	BUS NAME	VOLTAGE	THREE PHASE FAULT		SINGLE PHASE FAULT	
			KA	MVA	KA	MVA
1403	Natore	132	10.94	2499	11.67	2667
1404	Niamatpur	132	2.16	494	1.95	445
1405	Rajshahi	132	8.48	1939	9.12	2086
1406	Chapai Nowabganj	132	4.78	1091	3.75	856
1407	Rajshahi New	132	8.8	2012	10.96	2504
1410	Pabna	132	9.06	2070	9.21	2106
1411	Shahjadpur	132	13.02	2977	14.83	3389
1412	Baghabari	132	15.19	3473	18.69	4272
1413	Sirajganj	132	8.44	1930	8.48	1939
1415	Bogra	132	10.35	2365	11.66	2665
1416	Joypurhat	132	2.37	542	2.15	492
1417	Noagaon	132	4.69	1072	4.51	1030
1418	Palashbari	132	6.36	1454	6.47	1480
1420	Rangpur	132	6.63	1516	7.44	1701
1421	Lalmonirhat	132	2.87	655	2.73	625
1425	Saidpur	132	5.96	1363	6.72	1537
1430	Purbashadipur	132	4.51	1030	4.72	1079
1431	Panchagar	132	1.76	402	1.62	371
1432	Thakurgaon	132	2.99	683	2.91	666
1440	Boga New	132	10.19	2329	11.72	2679
1442	Barapukuria	132	7.69	1758	9.89	2260
2001	Raojan	230	10.41	4147	12.08	4811
2002	Hathazari	230	10.33	4115	11.99	4777
2003	Maniknagar	230	7.88	3140	9	3583
2004	Siddhirganj	230	8	3185	9.32	3713
2005	Comilla (N)	230	16.04	6388	17.58	7004
2007	Modunaghat	230	9.68	3854	11.61	4623
2008	Ashuganj	230	20.97	8352	23.16	9227
2009	Sikalbaha	230	8.77	3491	10.44	4161
2010	Ghorasal	230	21.8	8683	26.81	10680
2011	Tongi	230	18.48	7362	22.07	8793
2012	Haripur	230	20.82	8293	26.1	10398
2013	Hasnabad	230	17.09	6808	21.33	8498
2014	Meghnaghat	230	20.93	8339	26.55	10577
2015	Haripur 360	230	20.49	8163	25.46	10142
2016	Rampura	230	18	7172	21.52	8574
2020	Ishurdi	230	12.25	4881	15.35	6115
2028	Rajshahi	230	6.96	2771	7.69	3065
2029	Shyampur	230	17.71	7054	22.17	8831
2030	Baghabari	230	12.31	4901	14.4	5735
2032	Khulna (S)	230	5.31	2114	6.45	2567
2034	Aminbazar	230	18.89	7525	24.18	9634
2036	Sirajganj	230	13.41	5344	15.07	6004
2040	Bogra	230	8.68	3455	9.76	3886
2042	Barapukuria	230	6.06	2414	7.42	2955
2044	Bheramara	230	11.62	4628	14.48	5770
2045	Old Airport	230	18.35	7311	23.06	9187
2046	Sylhet	230	6.89	2745	6.84	2725
2048	Shahjibazar	230	12.22	4866	11.32	4510
2049	Jhenaidah	230	7.56	3010	9.2	3664
2052	Sripur	230	14.01	5580	15.35	6116
2053	B.Baria	230	18.73	7462	19.24	7664
2054	Bibiyana	230	8.43	3357	8.7	3465

2012 Case IV: Short Circuit Analysis Result

BUS ID	BUS NAME	VOLTAGE	THREE PHASE FAULT		SINGLE PHASE FAULT	
			KA	MVA	KA	MVA
1001	Kaptai	132	11.77	2690	13.07	2988
1002	Chandraghona	132	9.52	2175	9.94	2272
1003	Hathazari	132	16.79	3839	21.02	4807
1004	Baroirhat	132	9.57	2187	6.93	1583
1005	Modunaghat	132	16.27	3719	20.67	4725
1006	Sikalbaha	132	15.39	3519	19.35	4424
1008	Dohazari	132	6.75	1543	6.72	1536
1009	Cox's Bazar	132	2.87	655	2.61	597
1011	Halishahar	132	12.48	2852	13.7	3132
1012	Agrabad	132	12.75	2916	13.36	3053
1013	Kulshi	132	14.78	3378	17.75	4058
1014	AKSML	132	12.28	2806	12.1	2766
1015	Baraulia	132	13.54	3094	15.33	3504
1016	Bakulia	132	14.32	3275	17.14	3919
1017	Julda	132	13.32	3045	15.61	3570
1018	Shahmirpur	132	13.36	3054	15.76	3603
1019	Rangamati	132	4.79	1095	3.44	786
1020	Feni	132	8.56	1958	6.03	1377
1021	Chowmuhani	132	6.29	1438	4.75	1086
1022	Khagrachhari	132	1.92	439	1.53	349
1023	Ramganj	132	5.67	1296	4.34	992
1029	Chouddagram	132	8.92	2038	6.29	1438
1030	Comilla (N)	132	17.45	3989	20.36	4654
1031	Comilla (S)	132	8.07	1844	7.89	1804
1032	Chandpur	132	6.17	1409	6.1	1394
1033	Daudkandi	132	13.64	3118	13.9	3176
1101	Haripur	132	28.97	6622	37.6	8596
1102	Siddhirganj	132	27.43	6272	35.13	8032
1103	Moghbazar	132	18.39	4204	20.64	4719
1104	Maniknagar	132	16.91	3865	18.73	4282
1105	Ullon	132	21.99	5027	25.61	5855
1106	Dhanmondi	132	18.2	4161	19.96	4562
1107	Rampura	132	23.38	5344	28.65	6549
1108	Narinda	132	14.95	3417	16.01	3661
1109	Matuail	132	18.1	4138	19.75	4515
1110	Bangabhaban	132	15.55	3554	15.91	3636
1111	Shyampur	132	17.36	3970	20.63	4717
1112	Madanganj	132	21.34	4877	24.23	5540
1113	Hasnabad	132	21.52	4921	26.75	6115
1114	Sitalakhya	132	19.94	4559	23.31	5330
1115	Meghnaghat	132	14.91	3408	15.29	3495
1116	Gulshan	132	16.44	3758	17.86	4083
1117	Munsiganj	132	10.13	2316	9.82	2245
1118	Kamrangirchar	132	14.21	3247	15	3430
1120	Mirpur	132	19.71	4505	22.22	5079
1121	New Tongi	132	23.04	5268	25.95	5932
1122	Kalyanpur	132	20	4573	23.7	5419
1123	Uttara	132	19.1	4366	21.24	4856
1124	Bashundhara	132	21.29	4866	24.09	5508
1125	Tongi	132	24.49	5599	29.57	6759
1126	Kabirpur	132	16.26	3716	16.52	3777
1127	Manikganj	132	7.75	1772	7.18	1640
1128	Tangail	132	5.22	1194	4.71	1077
1129	Shyampur230	132	19.07	4359	23.55	5384

2012 Case IV: Short Circuit Analysis Result

BUS ID	BUS NAME	VOLTAGE	THREE PHASE FAULT		SINGLE PHASE FAULT	
			KA	MVA	KA	MVA
1130	Ghorasal	132	24.61	5625	28.07	6416
1131	Narsingdi	132	13.53	3092	13.25	3028
1132	Joydebpur	132	17.61	4027	18.2	4160
1133	Bhulta	132	11.72	2679	11.26	2573
1134	Aminbazar	132	21.42	4896	26.47	6051
1135	Savar	132	13.79	3153	14.72	3366
1136	Purbachal	132	17.67	4038	18.6	4252
1140	Madartek	132	20.86	4770	24.44	5588
1141	Mohammadpur	132	16.78	3837	18.93	4328
1142	Dhaka University	132	10.82	2474	12.52	2862
1143	Cantonment	132	10.98	2509	12.76	2917
1144	Bashundhara	132	20.18	4613	21.63	4944
1145	Old Airport	132	13.19	3016	16.54	3780
1146	Modhupur	132	14.06	3215	16.6	3795
1201	Ashuganj	132	24.95	5703	28.4	6491
1202	Kishoreganj	132	6.88	1572	6.85	1565
1203	Mymensingh	132	4.49	1026	5.18	1183
1204	Jamalpur	132	2.74	626	2.78	636
1205	Netrakona	132	3.22	735	3.38	772
1206	Bhaluka	132	3.06	700	2.61	596
1207	Sherpur	132	2.26	516	1.99	455
1210	B.Baria	132	16.62	3800	16.99	3884
1211	Shahjibazar	132	15.14	3460	16.87	3857
1212	Sreemangal	132	8.99	2055	7.61	1739
1213	Fenchuganj	132	9.28	2121	9.41	2150
1214	Fenchuganj P/S	132	9.55	2183	9.87	2256
1215	Sylhet	132	9.49	2170	9.84	2250
1216	Chhatak	132	5.31	1213	5.04	1151
1246	Sylhet New	132	10.44	2385	11.78	2693
1248	Shahjibazar New	132	15.07	3445	16.84	3850
1301	Goalpara	132	9.18	2098	10.6	2423
1302	Khulna Central	132	9.32	2132	10.82	2474
1303	Goalpara Switching	132	9.02	2062	9.86	2253
1304	Chuadanga	132	3.28	749	3.13	714
1305	Noapara	132	7.66	1751	8.18	1869
1306	Jessore	132	7.26	1659	7.62	1742
1307	Jhenaidah	132	10.26	2345	12.85	2938
1308	Kushtia (Bottail)	132	10.34	2363	11.2	2559
1309	Magura	132	3.72	851	3.6	823
1310	Bheramara	132	16	3658	20.13	4601
1313	Faridpur	132	4.48	1024	3.93	899
1314	Gopalganj	132	1.83	418	1.55	353
1315	Madaripur	132	4.27	975	3.55	811
1316	Barisal (N)	132	4.69	1071	3.97	907
1320	Barisal	132	5.17	1182	4.78	1091
1323	Bandaria	132	4.23	967	3.9	892
1324	Bagherhat	132	5.55	1268	5.43	1242
1326	Mongla	132	2.86	652	2.62	597
1328	Bhola	132	4.81	1099	4.14	946
1329	Gollamari	132	6.94	1587	8.15	1862
1330	Patuakhali	132	2.29	523	2.03	463
1331	Burhanuddin	132	4.94	1128	4.78	1091
1332	Khulna (S)	132	8.46	1933	10.79	2467
1334	Satkhira	132	2.39	545	2.25	515

2012 Case IV: Short Circuit Analysis Result

BUS ID	BUS NAME	VOLTAGE	THREE PHASE FAULT		SINGLE PHASE FAULT	
			KA	MVA	KA	MVA
1401	Ishurdi	132	17.03	3892	21.86	4998
1403	Natore	132	10.99	2513	11.71	2677
1404	Niamatpur	132	2.16	494	1.95	445
1405	Rajshahi	132	8.52	1948	9.15	2093
1406	Chapai Nowabganj	132	4.79	1094	3.75	858
1407	Rajshahi New	132	8.85	2022	11	2515
1410	Pabna	132	9.09	2079	9.24	2112
1411	Shahjadpur	132	13.07	2988	14.87	3400
1412	Baghabari	132	15.26	3488	18.75	4288
1413	Sirajganj	132	8.46	1934	8.5	1942
1415	Bogra	132	10.38	2372	11.68	2671
1416	Joypurhat	132	2.38	543	2.15	492
1417	Noagaon	132	4.7	1073	4.51	1031
1418	Palashbari	132	6.37	1456	6.48	1481
1420	Rangpur	132	6.64	1518	7.45	1702
1421	Lalmonirhat	132	2.87	655	2.73	625
1425	Saidpur	132	5.97	1364	6.73	1538
1430	Purbashadipur	132	4.51	1031	4.72	1079
1431	Panchagar	132	1.76	402	1.62	371
1432	Thakurgaon	132	2.99	684	2.91	666
1440	Boga New	132	10.22	2336	11.74	2684
1442	Barapukuria	132	7.7	1760	9.9	2262
2001	Raojan	230	10.41	4147	12.08	4811
2002	Hathazari	230	10.33	4116	11.99	4777
2003	Maniknagar	230	7.89	3141	9	3584
2004	Siddhirganj	230	8	3186	9.32	3714
2005	Comilla (N)	230	16.04	6391	17.59	7007
2007	Modunaghat	230	9.68	3854	11.61	4623
2008	Ashuganj	230	20.99	8362	23.18	9235
2009	Sikalbaha	230	8.77	3491	10.44	4161
2010	Ghorasal	230	21.83	8694	26.84	10692
2011	Tongi	230	18.5	7369	22.09	8799
2012	Haripur	230	20.83	8299	26.12	10404
2013	Hasnabad	230	17.1	6812	21.34	8502
2014	Meghnaghat	230	20.95	8345	26.57	10584
2015	Haripur 360	230	20.51	8169	25.47	10148
2016	Rampura	230	18.02	7178	21.54	8579
2020	Ishurdi	230	12.42	4948	15.54	6191
2028	Rajshahi	230	7.01	2791	7.74	3081
2029	Shyampur	230	17.72	7059	22.18	8836
2030	Baghabari	230	12.4	4938	14.48	5769
2032	Khulna (S)	230	5.33	2124	6.47	2576
2034	Aminbazar	230	18.91	7531	24.2	9640
2036	Sirajganj	230	13.48	5369	15.13	6026
2040	Bogra	230	8.7	3466	9.78	3895
2042	Barapukuria	230	6.07	2418	7.43	2959
2044	Bheramara	230	11.8	4700	14.72	5863
2045	Old Airport	230	18.37	7316	23.08	9193
2046	Sylhet	230	6.89	2746	6.84	2725
2048	Shahjibazar	230	12.22	4868	11.33	4511
2049	Jhenaidah	230	7.62	3034	9.26	3690
2052	Sripur	230	14.03	5591	15.38	6125
2053	B.Baria	230	18.75	7469	19.25	7669
2054	Bibiyana	230	8.43	3358	8.7	3466

ATTACHMENT 6 Financial Model based on Constant Prices (Base Case)

1. ECONOMIC ASSUMPTIONS
2. PROJECT PARAMETERS
3. CAPITAL COST
4. CAPITAL COST (2014 CONSTANT PRICE)
5. CAPITAL & OPERATIONAL COST (FIRR)
6. FINANCIAL INTERNAL RATE OF RETURN
7. FINANCIAL STATEMENTS
8. CASH FLOW STATEMENT & KEY PERFORMANCE INDICATORS
9. CAPITAL & OPERATIONAL COST (EIRR)
10. ECONOMIC INTERNAL RATE OF RETURN

FINANCIAL MODEL BASED ON CONSTANT PRICES
<BASE CASE>

ATTACHMENT 6.1 ECONOMIC ASSUMPTIONS

		0	1	2	3	4	5	6	7	8	9	10	11	12	13
Fiscal Year Ending at	**Unit**	**2005**	**2006**	**2007**	**2008**	**2009**	**2010**	**2011**	**2012**	**2013**	**2014**	**2015**	**2016**	**2017**	**2018**
Inflation															
Local Inflation (end of June)	% p.a.	7.35	7.54	9.20	10.04	7.00	5.99	5.99	5.99	5.99	5.99	5.99	5.99	5.99	5.99
Local inflation (average for fiscal year)	% p.a.	6.48	7.16	7.20	9.94	8.50	4.63	4.63	4.63	4.63	4.63	4.63	4.63	4.63	4.63
US inflation (average July-June)	% p.a.	3.15	5.16	1.18	3.79	2.54	2.54	2.54	2.54	2.54	2.54	2.54	2.54	2.54	2.54
Inflation differential between Bangladesh & USA	% p.a.	3.23	1.90	5.95	5.93	5.81	2.04	2.04	2.04	2.04	2.04	2.04	2.04	2.04	2.04
Inflation in Japan (average July-June)	% p.a.	0.1	-0.3	0.2	0.7	1.0	1.0	1.0	1.0	1.0	1.0	1.0	1.0	1.0	1.0
Inflation differential between Bangladesh & Japan	% p.a.	6.37	7.48	6.99	9.18	7.43	3.59	3.59	3.59	3.59	3.59	3.59	3.59	3.59	3.59
Price index															
Local prices (Average: 1995/6=100)		153.2	164.2	176.0	185.7	201.5	210.8	220.6	230.8	241.5	252.7	264.3	276.6	289.4	302.8
Local prices (end of June: 1996=100)			169.3	184.9	193.5	210.0	219.7	229.9	240.5	251.7	263.3	275.5	288.3	301.6	315.6
US prices (average July-June: 1984=100)		191.7	201.6	204.0	211.7	217.1	222.6	228.2	234.0	240.0	246.1	252.3	258.7	265.3	272.1
Japanese prices (average July-June: 2005=100)		100.3	100.0	100.2	100.9	101.9	102.9	104.0	105.0	106.0	107.1	108.2	109.3	110.4	111.5
Exchange rate															
Taka/US$ (average)	Taka	61.39	67.08	69.03	68.60	70.03	72.42	74.81	77.20	79.59	81.98	84.37	86.76	89.15	91.54
Change from previous year	% p.a.	1.04	9.27	2.91	-0.01	2.08	3.41	3.30	3.20	3.10	3.00	2.92	2.83	2.76	2.68
Taka/JPY (average)	Taka	0.57	0.59	0.58	0.62	0.59	0.60	0.62	0.64	0.66	0.67	0.69	0.71	0.73	0.75
Change from previous year	% p.a.	7.54	3.51	-1.69	0.07	-5.53	3.02	2.93	2.85	2.77	2.70	2.63	2.56	2.49	2.43
Electricity Tariff															
Average Billing Rate of BPDB	Tk/kWh	2.27	2.19	2.26											
Bulk Wholesale Tariff	Tk/kWh			2.04	2.37	2.57					3.22				
Willingness-to-Pay (generation level)	Tk/kWh										11.06				
Fuel price (real)															
Diesel Oil (No.2 Distillate: US EIA)	US$/Gallon		2.12	2.16	2.98										
Natural Gas (US EIA current price for actual & 2008 price for future)	US$/mcf		7.11	7.58	8.96										
Natural Gas (US EIA current price for actual & 2008 price for future)	US$/MMBTU		7.48	7.98	9.43										
Natural Gas (US EIA current price for actual & 2008 price for future)	US$/GJ		7.09	7.56	8.94						10.58				
Fuel price (real)															
Diesel Oil (No.2 Distillate: US EIA)	Taka/liter		37.5	39.3	54.1										
Diesel Oil (int'l price when crude oil was at US$100/bbl: US EIA)	Taka/liter				60.4						62.92				
Natural Gas (US EIA current price for actual & 2008 price for future)	Taka/GJ		476	507	600						710				
Natural gas (subsidized domestic tariff)	Taka/GJ	73.74	73.74	73.74	73.74	80.01	83.71	87.59	91.64	95.89	100.33	104.97	109.83	114.92	120.24

Legend: =Actuals and shall not be changed. =Fields for input with assumptive data.

Conversion Factor

Distillate fuel oil (liter per U.S. Gallon)	1 Gallon=	3.7854	liter
Distillate fuel oil (MMBTU per bbl)	1bbl=	5.799	MMBTU
Natural gas (MM kcal/GJ)	1MMkcal=	4.1868	GJ
Natural gas (GJ/MM BTU)	1MMBTU=	1.0551	GJ
Natural gas (BTU per cubic feet)	1SCF=	950	BTU
Electricity (BTU per kWh)	1kWh=	3,412.0	BTU

ATTACHMENT 6.2 PROJECT PARAMETERS
<2008 Constant Price>

Item	Combined Cycle Gas Turbine	
Capital Investment		
Capacity	365.6	MW
Plant Factor	70.0%	
Annual Output	2,241.9	GWh
Auxiliary Consumption	2.9%	
Net Units at Busbar	2,176.8	GWh
Net Heat Rate	6,642	KJ
Project Life	30	years
Construction to Start	2009	
Commercial Operation to Start	October 1, 2014	
Land Cost		Tk/m²/yr
Price of Fuel	Refer to Macro Assumption	
Equipment and Infrastructure Cost	Refer to Project Capital Cost	
Depreciation	30	years for total plant
Salvage Value	10.0%	
Transportation & Insurance		
L/C, Bank Charges, etc.		
Physical Contingencies	5.0%	of total EPC & LTSA Contract
Price Contingencies (Foreign)	4.1%	p.a. of total EPC & LTSA Contract per year (Foreign). Price contingency is excluded from EIRR and FIRR calculation.
Price Contingency (Local)	5.4%	p.a. of total EPC & LTSA Contract per year (Local). Price contingency is excluded from EIRR and FIRR calculation.
Finance		
Equity	12%	of total investment
Debt	88%	of total investment
Yen Loan	80%	of total investment
Domestic Loan	8%	of total investment
Yen Loan		
Grace Period	5	years
Repayment Period	20	years
Rate of Interest During Operation Period	4.00%	p.a.
Rate of Interest During Construction	4.00%	p.a.
Domestic Loan		
Grace Period	5	years
Repayment Period	20	years
Rate of Interest During Operation Period	3.00%	p.a.
Rate of Interest During Construction	3.00%	p.a.
Short term Loan	10.00%	p.a.
Interest on Deposit	3.00%	p.a.
Operation & Maintenance		
LTSA Contract (2014-2020)		
Initial Spare Parts (incl. Contingency)	2,517	JPY Million
Maintenance under LTSA (inc. Conti.)	772	JPY Million/year
Normal Maintenance		
Fixed Cost	604	Taka/kW/year (US$8.80/kW)
Variable Cost (Local)	20	Taka/MWh
Variable Cost (Foreign)	254	Taka/MWh (US$4.00/MWh-Variable Cost (local))
O&M Adjustment during LTSA	-478	Taka/year during 2015-2020
Working Capital		
Cash for O&M Expense	2	months of O&M expense
Materials & Supplies	1	month of O&M
Prepayments	0	month of sales
Account Receivable		
Account receivable	2	months of Sales
Account payable	2	months of Fuel Bill
Provision for Bad Debts		
Account Receivable	0.00%	account receivable
Administration Cost		
Overhead Cost	0.00%	of const cost
Tax & Duties		
Corporate Income Tax	40%	
Income Tax & VAT for EPC Contractor	8.5%	= Income Tax 4.0% + VAT 4.5%
Income Tax & VAT for Consultant	14.5%	= Income Tax 10.0% + VAT 4.5%
VAT	15%	
Custom Duties & VAT for Imports	30%	= Custom Duty 15.0% + VAT 15.0%

(source)

Target Financial Ratio

Debt/equity ratio	82%	(Target set by FRRP=60%)
Return on equity (after tax)	9.0%	
Return on equity (before tax)	15.0%	
Return on asset	10%	
Current ratio	150%	
Debt service coverage	1.3	(=Target set by FRRP)
Self Financing Ratio	30%	

Legend =Basic Project Plan =Fields for input with assumptive data.and changeab

ATTACHMENT 6.3 CAPITAL COST
<2008 Constant Price>

A2. Fuel Gas Brunch Pipeline	Total Cost			2009 (Tk million)	2010 (Tk million)	2011 (Tk million)	2012 (Tk million)	2013 (Tk million)	2014 (Tk million)
	Foreign Cy (JPY million)	Local Cy (Tk. million)	Total Cost (Tk million)						
A. Construction Work									
A1.Power Plant Installation & Related Works									
FOB Price of Imported Equipment	31,457	0	19,503						
Marine, Flight and Insurance	790	0	490						
Inland Transportation & Insurance	0	255	255						
Construction, Erection, Commissioning & Insurance	1,974	3,821	5,045						
A2. Fuel Gas Branch Pipeline									
Installation of Gas Pipeline and Station (RMS)	43	5	32						
A3. 230kV Substation									
Installation of Substation	1,517	138	1,079						
A4. 132kV Substation									
Replacement of Substation	601	117	490						
A5. Transmission Line									
230kV Main Transmission Line to 230kV S/S	64	2	42						
A1-5. Total EPC Contract (Foreign)	36,446	0	22,597		0	6,779	4,519	4,519	6,779
A1-5. Total EPC Contract (Local)	0	4,338	4,338		0	1,301	868	868	1,301
B. Consulting Services									
Consulting Services (Foreign)	1,539	0	954		191	191	143	143	286
Consulting Services (Local)	0	233	233		47	47	35	35	70
C. Contingency									
C1. Physical Contingency (Foreign) (5% of A1-5)	1,822	0	1,130		0	556	371	371	339
C2. Physical Contingency (Local) (5% of A1-5)	0	217	217		0	65	43	43	65
C3. Price Contingency (Foreign) (4.1%p.a. of A1-5)	6,724	0	4,169		0	834	741	926	1,668
C4. Price Contingency (Local) (5.4%p.a. of A1-5)	0	1,054	1,054		0	211	187	234	422
D. Custom Duties, Taxes and VAT									
D1. Custom Duties & VAT (30% of Foreign Portion of A1-5 (Foreign) & C1	0	6,779	6,779		0	2,034	1,356	1,356	2,034
D2. VAT & Income Tax on EPC Contractor 8.5% on A1-5 (local) & C2	0	369	369		0	111	74	74	111
D3. VAT & Income Tax on Consultant (14.5% of B)	0	172	172		34	34	26	26	52
E. Interest During Construction									
E1. Cumulative Total of A-D (Foreign) excl C-3					191	7,717	12,750	5,224	15,121
E2. Cumulative Total of A-D (Local) excl. C-4					81	3,673	6,074	8,475	12,108
E3. Interest During Construction (Foreign)					9	127	327	288	326
E4. Interest During Construction (Local)					0	5	12	17	25
Exchange Loss During Construction									
TOTAL PROJECT COST (excl Price Contingency & IDC)									
Total (Foreign)					191	7,526	5,033	5,033	7,404
Total (Local)					81	3,592	2,401	2,401	3,632
TOTAL					272	11,117	7,434	7,434	11,036
CUMULATIVE INVESTMENT (excl. Price Contingency & IDC)									
Total (Foreign)					191	7,717	12,750	17,783	25,187
Total (Local)					81	3,673	6,074	8,475	12,108
TOTAL					272	11,389	18,824	26,258	37,294
CUMULATIVE BALANCE OF LOAN (excl. Price Contingency & IDC)									
Total (Foreign)					217	9,111	15,059	21,006	29,836
Total (Local)					22	911	1,506	2,101	2,984
TOTAL					239	10,023	16,565	23,107	32,819
Equity (12%) in Taka million					33	1,367	2,259	3,151	4,475
Borrowing from GOB (8%) in Taka million					22	911	1,506	2,101	2,984
Borrowing of External Funds (80%) in Taka million					217	9,111	15,059	21,006	29,836

(Note) Constant price as of June, 2008

Exchange Rate JPY1= 0.67 Taka

Legend =Automatically calculated and shall not be changed =Fields for input with assumptive data.and changeable

ATTACHMENT 6.4 CAPITAL COST (2014 CONSTANT PRICE)

<2014 Constant Price>

A2. Fuel Gas Brunch Pipeline	Total Cost			2009 (Tk million)	2010 (Tk million)	2011 (Tk million)	2012 (Tk million)	2013 (Tk million)	2014 (Tk million)
	Foreign Cy (JPY	Local Cy (Tk.	Total Cost (Tk million)						
A. Construction Work									
A1.Power Plant Installation & Related Works									
FOB Price of Imported Equipment	33,392	0	22,513						
Marine, Flight and Insurance	839	0	565						
Inland Transportation & Insurance	0	347	347						
Construction, Erection, Commissioning & Insurance	2,095	5,199	6,611						
A2. Fuel Gas Bruch Pipeline									
Installation of Gas Pipeline and Station (RMS)	0	7	7						
A3. 230kV Substation									
Installation of Substation	1,610	188	1,273						
A4. 132kV Substation									
Replacement of Substation	638	159	589						
A5. Transmission Line									
230kV Main Transmission Line to 230kV S/S	68	3	49						
A1-5. Total EPC Contract (Foreign)	38,688	0	26,084		0	7,825	5,217	5,217	7,825
A1-5. Total EPC Contract (Local)	0	5,902	5,902		0	1,771	1,180	1,180	1,771
B. Consulting Services									
Consulting Services (Foreign)	1,634	0	1,101		220	220	165	165	330
Consulting Services (Local)	0	317	317		63	63	48	48	95
C. Contingency									
C1. Physical Contingency (Foreign) (5% of A1-5)	1,934	0	1,304		0	391	261	261	391
C2. Physical Contingency (Local) (5% of A1-5)	0	295	295		0	89	59	59	89
C3. Price Contingency (Foreign) (4.1% p.a. of A1-5)	7,931	0	5,347		0	1,604	1,069	1,069	1,604
C4. Price Contingency (Local) (5.4% p.a. of A1-5)	0	1,594	1,594		0	478	319	319	478
D. Custom Duties, Taxes and VAT									
D1. Custom Duties & VAT (30% of A1-5 (Foreign) & C1)	0	9,223	9,223		0	2,767	1,845	1,845	2,767
D2. VAT & Income Tax on EPC Contractor (8.5% on A1-5 (local) & C2)	0	502	502		0	151	100	100	151
D3. VAT & Income Tax on Consultant (14% of B)	0	234	234		47	47	35	35	70
E. Interest During Construction									
E1. Cumulative Total of A-D (Foreign) excl. C-3					220	8,657	14,300	19,942	28,489
E2. Cumulative Total of A-D (Local) excl. C-4					110	4,997	8,264	11,531	16,473
E3. Interest During Construction (Foreign)					4	142	367	548	775
E4. Interest During Construction (Local)					0	6	16	24	34
Exchange Loss During Construction									
TOTAL PROJECT COST (excl Price Contingency & IDC)									
Total (Foreign)					220	8,437	5,643	5,643	8,547
Total (Local)					110	4,887	3,267	3,267	4,942
TOTAL					331	13,323	8,910	8,910	13,489
CUMULATIVE INVESTMENT (excl. Price Contingency & IDC)									
Total (Foreign)					220	8,657	14,300	19,942	28,489
Total (Local)					110	4,997	8,264	11,531	16,473
TOTAL					331	13,654	22,564	31,474	44,962
CUMULATIVE INVESTMENT (excl. Taxes, Price Contingency & IDC)									
Total (Foreign)					220	8,657	14,300	19,942	28,489
Total (Local)					63	1,986	3,273	4,560	6,514
TOTAL					284	10,643	17,573	24,502	35,003
CUMULATIVE BALANCE OF LOAN (excl. Price Contingency & IDC)									
Total (Foreign)					267	12,443	8,545	8,696	13,103
Total (Local)					27	1,244	854	870	1,310
TOTAL					294	13,687	9,399	9,565	14,414
Equity (12%) in Taka million					40	1,866	1,282	1,304	1,966
Foreign Borrowing (80%) in Taka Million					267	12,443	8,545	8,696	13,103
Local Borrowing (8%) in Taka million					27	1,244	854	870	1,310
Check Digit (Yen Loan is not financing Taxes)					OK	OK	OK	OK	OK

Legend =Automatically calculated and shall not be changed

ATTACHMENT 6.5 CAPITAL & OPERATIONAL COST (FIRR)

<GOB Gas Tariff>

(Taka Million)

		0	1	2	3	4	5	6	7	8	9	10	11	12	13	14	15	16	17	18	19	20	21	22	23	24	25	26	27	28	29	30	31	32	33	34
Fiscal Year Ending at	**Unit**	**2010**	**2011**	**2012**	**2013**	**2014**	**2015**	**2016**	**2017**	**2018**	**2019**	**2020**	**2021**	**2022**	**2023**	**2024**	**2025**	**2026**	**2027**	**2028**	**2029**	**2030**	**2031**	**2032**	**2033**	**2034**	**2035**	**2036**	**2037**	**2038**	**2039**	**2040**	**2041**	**2042**	**2043**	**2044**
Gross Annual Energy Output (GWh)							2,242	2,242	2,242	2,242	2,242	2,242	2,242	2,242	2,242	2,242	2,242	2,242	2,242	2,242	2,242	2,242	2,242	2,242	2,242	2,242	2,242	2,242	2,242	2,242	2,242	2,242	2,242	2,242	2,242	2,242
Net Annual Energy Output (GWh)							2,177	2,177	2,177	2,177	2,177	2,177	2,177	2,177	2,177	2,177	2,177	2,177	2,177	2,177	2,177	2,177	2,177	2,177	2,177	2,177	2,177	2,177	2,177	2,177	2,177	2,177	2,177	2,177	2,177	2,177
Electricity Sales							7,009	7,009	7,009	7,009	7,009	7,009	7,009	7,009	7,009	7,009	7,009	7,009	7,009	7,009	7,009	7,009	7,009	7,009	7,009	7,009	7,009	7,009	7,009	7,009	7,009	7,009	7,009	7,009	7,009	7,009
Capital Expenditure (cumulative)		331	13,654	22,564	31,474	44,962																														
Foreign Currency		220	8,657	14,300	19,942	28,489																														
Local Currency		110	4,997	8,264	11,531	16,473																														
Fund Raising (Balance at Year End)																																				
Equity (Cumulative Investment)		40	1,638	2,708	3,777	5,395	5,395	5,395	5,395	5,395	5,395	5,395	5,395	5,395	5,395	5,395	5,395	5,395	5,395	5,395	5,395	5,395	5,395	5,395	5,395	5,395	5,395	5,395	5,395	5,395	5,395	5,395	5,395	5,395	5,395
Loan Balance (Foreign)		264	10,923	18,051	25,179	35,970	35,970	35,970	35,970	35,970	35,970	34,171	32,373	30,574	28,776	26,977	25,179	23,380	21,582	19,783	17,985	16,186	14,388	12,589	10,791	8,992	7,194	5,395	3,597	1,798	0	0	0	0	0	0
Loan Balance (Local)		26	1,092	1,805	2,518	3,597	3,597	3,597	3,597	3,597	3,597	3,417	3,237	3,057	2,878	2,698	2,518	2,338	2,158	1,978	1,798	1,619	1,439	1,259	1,079	899	719	540	360	180	0	0	0	0	0	0
Repayment of Loans																																				
Foreign Loan Repayment							0	0	0	0	0	1,798	1,798	1,798	1,798	1,798	1,798	1,798	1,798	1,798	1,798	1,798	1,798	1,798	1,798	1,798	1,798	1,798	1,798	1,798	0	0	0	0	0
Local Loan Repatment							0	0	0	0	0	180	180	180	180	180	180	180	180	180	180	180	180	180	180	180	180	180	180	180	0	0	0	0	0
Equity																																				
Increase of Equity							0	0	0	0	0	0	0	0	0	0	0	0	0	0	0	0	0	0	0	0	0	0	0	0	0	0	0	0	0	0
Redemption of Equity							0	0	0	0	0	0	0	0	0	0	0	0	0	0	0	0	0	0	0	0	0	0	0	0	0	0	0	0	0	0
Fixed Cost (Foreign)																																				
LTSA (initial parts)							1,801																													
LTSA (maintenance)							552	552	552	552	552	552																								
Loan Interest (Foreign)							1,439	1,439	1,439	1,439	1,439	1,403	1,331	1,259	1,187	1,115	1,043	971	899	827	755	683	611	540	468	396	324	252	180	108	36	0	0	0	0	0
Fixed Cost (Local)																																				
O & M (Fixed)							300	300	300	300	300	300	300	300	300	300	300	300	300	300	300	300	300	300	300	300	300	300	300	300	300	300	300	300	300	300
Custom Duties & VAT on Spare Parts							540																													
VAT on O&M							128	128	128	128	128	128	45	45	45	45	45	45	45	45	45	45	45	45	45	45	45	45	45	45	45	45	45	45	45	45
Depreciation							1,349	1,349	1,349	1,349	1,349	1,349	1,349	1,349	1,349	1,349	1,349	1,349	1,349	1,349	1,349	1,349	1,349	1,349	1,349	1,349	1,349	1,349	1,349	1,349	1,349	1,349	1,349	1,349	1,349	1,349
Return on Equity							809	809	809	809	809	809	809	809	809	809	809	809	809	809	809	809	809	809	809	809	809	809	809	809	809	809	809	809	809	809
Loan Interest (Local)							108	108	108	108	108	105	100	94	89	84	78	73	67	62	57	51	46	40	35	30	24	19	13	8	3	0	0	0	0	0
Variable Cost (Foreign)																																				
O & M (Variable)							605	605	605	605	605	605	605	605	605	605	605	605	605	605	605	605	605	605	605	605	605	605	605	605	605	605	605	605	605	605
O&M Adjustment during LTSA							-552	-552	-552	-552	-552	-552																								
Net O&M (variable)							53	53	53	53	53	53	605	605	605	605	605	605	605	605	605	605	605	605	605	605	605	605	605	605	605	605	605	605	605	605
Variable Cost (Local)																																				
Fuel Cost (HSDO)																																				
Fuel Cost (Natural Gas)							1,494	1,494	1,494	1,494	1,494	1,494	1,494	1,494	1,494	1,494	1,494	1,494	1,494	1,494	1,494	1,494	1,494	1,494	1,494	1,494	1,494	1,494	1,494	1,494	1,494	1,494	1,494	1,494	1,494	1,494
O & M (Variable)							59	59	59	59	59	59	59	59	59	59	59	59	59	59	59	59	59	59	59	59	59	59	59	59	59	59	59	59	59	59
Custom Duties & VAT on O&M (Foreign)							16	16	16	16	16	16	182	182	182	182	182	182	182	182	182	182	182	182	182	182	182	182	182	182	182	182	182	182	182	182
VAT on O&M							9	9	9	9	9	9	9	9	9	9	9	9	9	9	9	9	9	9	9	9	9	9	9	9	9	9	9	9	9	9
Salvage Value																																				
Land																																				0
Plant																																				4,496
Annual Costs							8,658	6,316	6,316	6,316	6,316	6,278	6,283	6,206	6,129	6,051	5,974	5,897	5,819	5,742	5,665	5,587	5,510	5,433	5,355	5,278	5,201	5,123	5,046	4,969	4,891	4,853	4,853	4,853	4,853	4,853
Total Fixed Costs							7,027	4,685	4,685	4,685	4,685	4,647	3,934	3,857	3,780	3,702	3,625	3,548	3,470	3,393	3,316	3,238	3,161	3,084	3,006	2,929	2,852	2,774	2,697	2,620	2,542	2,504	2,504	2,504	2,504	2,504
Total Variable Costs							1,631	1,631	1,631	1,631	1,631	1,631	2,349	2,349	2,349	2,349	2,349	2,349	2,349	2,349	2,349	2,349	2,349	2,349	2,349	2,349	2,349	2,349	2,349	2,349	2,349	2,349	2,349	2,349	2,349	2,349
Profit before Tax							-840	1,501	1,501	1,501	1,501	1,540	1,535	1,612	1,689	1,767	1,844	1,921	1,999	2,076	2,153	2,231	2,308	2,385	2,463	2,540	2,617	2,695	2,772	2,849	2,927	2,965	2,965	2,965	2,965	2,965
Income Tax							0	264	601	601	601	616	614	645	676	707	738	769	799	830	861	892	923	954	985	1,016	1,047	1,078	1,109	1,140	1,171	1,186	1,186	1,186	1,186	1,186
Net Profit after Tax							-840	1,237	901	901	901	924	921	967	1,014	1,060	1,106	1,153	1,199	1,246	1,292	1,338	1,385	1,431	1,478	1,524	1,570	1,617	1,663	1,710	1,756	1,779	1,779	1,779	1,779	1,779
Cum. Profits Available for Dividends							-840	397	1,298	1,713	2,128	2,567	3,002	3,483	4,011	4,586	5,206	5,874	6,587	7,347	8,153	9,006	9,905	10,851	11,843	12,881	13,966	15,097	16,275	17,499	18,769	20,063	21,356	20,063	21,356	22,650
Dividend (Net Return on Equity)							0	0	486	486	486	486	486	486	486	486	486	486	486	486	486	486	486	486	486	486	486	486	486	486	486	486	486	486	486	486
Cumulative Retained Earnings							-840	397	812	1,227	1,643	2,081	2,516	2,998	3,526	4,100	4,721	5,388	6,102	6,861	7,668	8,521	9,420	10,365	11,357	12,396	13,480	14,612	15,789	17,013	18,284	19,577	20,871	19,577	20,871	22,164
Financial Benefit							7,009	7,009	7,009	7,009	7,009	7,009	7,009	7,009	7,009	7,009	7,009	7,009	7,009	7,009	7,009	7,009	7,009	7,009	7,009	7,009	7,009	7,009	7,009	7,009	7,009	7,009	7,009	7,009	7,009	11,505
Capital Expenditure		331	13,323	8,910	8,910	13,489																														
Operation Cost + Taxes							4,953	2,876	3,212	3,212	3,212	3,228	3,308	3,339	3,370	3,401	3,432	3,463	3,494	3,525	3,556	3,587	3,618	3,648	3,679	3,710	3,741	3,772	3,803	3,834	3,865	3,880	3,880	3,880	3,880	3,880
Financial Benefit - Financial Cost		-331	-13,323	-8,910	-8,910	-13,489	2,055	4,133	3,796	3,796	3,796	3,781	3,700	3,669	3,638	3,608	3,577	3,546	3,515	3,484	3,453	3,422	3,391	3,360	3,329	3,298	3,267	3,236	3,205	3,174	3,144	3,128	3,128	3,128	3,128	7,624
FIRR		**5.88%**																																		

Legend =O&M Cost =Fields for input with assumptive data.and changeable

ATTACHMENT 6.6 FINANCIAL INTERNAL RATE OF RETURN

(Taka Million)

Fiscal Year	Financial Cost (A)			Financial Benefit (B)	(B) - (A)
	Capital	O&M	Total Cost		
2010	331		331		-331
2011	13,323		13,323		-13,323
2012	8,910		8,910		-8,910
2013	8,910		8,910		-8,910
2014	13,489		13,489		-13,489
2015		4,953	4,953	7,009	2,055
2016		2,876	2,876	7,009	4,133
2017		3,212	3,212	7,009	3,796
2018		3,212	3,212	7,009	3,796
2019		3,212	3,212	7,009	3,796
2020		3,228	3,228	7,009	3,781
2021		3,308	3,308	7,009	3,700
2022		3,339	3,339	7,009	3,669
2023		3,370	3,370	7,009	3,638
2024		3,401	3,401	7,009	3,608
2025		3,432	3,432	7,009	3,577
2026		3,463	3,463	7,009	3,546
2027		3,494	3,494	7,009	3,515
2028		3,525	3,525	7,009	3,484
2029		3,556	3,556	7,009	3,453
2030		3,587	3,587	7,009	3,422
2031		3,618	3,618	7,009	3,391
2032		3,648	3,648	7,009	3,360
2033		3,679	3,679	7,009	3,329
2034		3,710	3,710	7,009	3,298
2035		3,741	3,741	7,009	3,267
2036		3,772	3,772	7,009	3,236
2037		3,803	3,803	7,009	3,205
2038		3,834	3,834	7,009	3,174
2039		3,865	3,865	7,009	3,144
2040		3,880	3,880	7,009	3,128
2041		3,880	3,880	7,009	3,128
2042		3,880	3,880	7,009	3,128
2043		3,880	3,880	7,009	3,128
2044		3,880	3,880	11,505	7,624
Total	44,962	108,241	153,203	214,752	61,549
FIRR			**5.88%**		

ATTACHMENT 6.7 FINANCIAL STATEMENTS

<excl. Price Contingency & IDC; 2014 Constant Price>

(Million Taka)

Fiscal Year Ending at	Unit	0 2010	2 2011	3 2012	4 2013	5 2014	6 2015	7 2016	8 2017	9 2018	10 2019	11 2020	12 2021	13 2022	14 2023	15 2024	16 2025	17 2026	18 2027	19 2028	20 2029	21 2030	22 2031	23 2032	24 2033	25 2034	26 2035	27 2036	28 2037	29 2038	30 2039	31 2040	32 2041	33 2042	34 2043	35 2044
Income Statement																																				
Operating Revenues																																				
Electricity sales to Single Buyer							7,009	7,009	7,009	7,009	7,009	7,009	7,009	7,009	7,009	7,009	7,009	7,009	7,009	7,009	7,009	7,009	7,009	7,009	7,009	7,009	7,009	7,009	7,009	7,009	7,009	7,009	7,009	7,009	7,009	7,009
Other operating income																																				
Total Operating Revenues							7,009	7,009	7,009	7,009	7,009	7,009	7,009	7,009	7,009	7,009	7,009	7,009	7,009	7,009	7,009	7,009	7,009	7,009	7,009	7,009	7,009	7,009	7,009	7,009	7,009	7,009	7,009	7,009	7,009	7,009
Operating Expenses																																				
Fuel purchase							1,494	1,494	1,494	1,494	1,494	1,494	1,494	1,494	1,494	1,494	1,494	1,494	1,494	1,494	1,494	1,494	1,494	1,494	1,494	1,494	1,494	1,494	1,494	1,494	1,494	1,494	1,494	1,494	1,494	1,494
O&M cost							3,459	1,118	1,118	1,118	1,118	1,118	1,200	1,200	1,200	1,200	1,200	1,200	1,200	1,200	1,200	1,200	1,200	1,200	1,200	1,200	1,200	1,200	1,200	1,200	1,200	1,200	1,200	1,200	1,200	1,200
Staff expense																																				
Administrative overhead cost							0	0	0	0	0	0	0	0	0	0	0	0	0	0	0	0	0	0	0	0	0	0	0	0	0	0	0	0	0	0
Provision for bad debts							0	0	0	0	0	0	0	0	0	0	0	0	0	0	0	0	0	0	0	0	0	0	0	0	0	0	0	0	0	0
Depreciation							1,349	1,349	1,349	1,349	1,349	1,349	1,349	1,349	1,349	1,349	1,349	1,349	1,349	1,349	1,349	1,349	1,349	1,349	1,349	1,349	1,349	1,349	1,349	1,349	1,349	1,349	1,349	1,349	1,349	1,349
Total Operating Expenses							6,302	3,960	3,960	3,960	3,960	3,960	4,043	4,043	4,043	4,043	4,043	4,043	4,043	4,043	4,043	4,043	4,043	4,043	4,043	4,043	4,043	4,043	4,043	4,043	4,043	4,043	4,043	4,043	4,043	4,043
Operating Income							707	3,048	3,048	3,048	3,048	3,048	2,965	2,965	2,965	2,965	2,965	2,965	2,965	2,965	2,965	2,965	2,965	2,965	2,965	2,965	2,965	2,965	2,965	2,965	2,965	2,965	2,965	2,965	2,965	2,965
Interest income																																				
Non-Operating Income																																				
Earnings before Interest and Taxes (EBIT)							707	3,048	3,048	3,048	3,048	3,048	2,965	2,965	2,965	2,965	2,965	2,965	2,965	2,965	2,965	2,965	2,965	2,965	2,965	2,965	2,965	2,965	2,965	2,965	2,965	2,965	2,965	2,965	2,965	2,965
Interest on external loan							1,439	1,439	1,439	1,439	1,439	1,403	1,331	1,259	1,187	1,115	1,043	971	899	827	755	683	611	540	468	396	324	252	180	108	36	0	0	0	0	0
Interest on government loan							108	108	108	108	108	105	100	94	89	84	78	73	67	62	57	51	46	40	35	30	24	19	13	8	3	0	0	0	0	0
Interest on short term loan																																				
Unrealized foreign exchange loss (gain)																																				
Finance Expenses							1,547	1,547	1,547	1,547	1,547	1,508	1,431	1,353	1,276	1,199	1,121	1,044	967	889	812	735	657	580	503	425	348	271	193	116	39	0	0	0	0	0
Subsidies received																																				
Net Income before Tax							-840	1,501	1,501	1,501	1,501	1,540	1,535	1,612	1,689	1,767	1,844	1,921	1,999	2,076	2,153	2,231	2,308	2,385	2,463	2,540	2,617	2,695	2,772	2,849	2,927	2,965	2,965	2,965	2,965	2,965
Income Tax Paid							0	264	601	601	601	616	614	645	676	707	738	769	799	830	861	892	923	954	985	1,016	1,047	1,078	1,109	1,140	1,171	1,186	1,186	1,186	1,186	1,186
Net Income after Tax							**-840**	**1,237**	**901**	**901**	**901**	**924**	**921**	**967**	**1,014**	**1,060**	**1,106**	**1,153**	**1,199**	**1,246**	**1,292**	**1,338**	**1,385**	**1,431**	**1,478**	**1,524**	**1,570**	**1,617**	**1,663**	**1,710**	**1,756**	**1,779**	**1,779**	**1,779**	**1,779**	**1,779**
Dividend paid							0	0	486	486	486	486	486	486	486	486	486	486	486	486	486	486	486	486	486	486	486	486	486	486	486	486	486	486	486	486
Capital redeemed																																				
Retained Earnings (losses)							**-840**	**1,237**	**415**	**415**	**415**	**438**	**435**	**482**	**528**	**574**	**621**	**667**	**714**	**760**	**806**	**853**	**899**	**946**	**992**	**1,038**	**1,085**	**1,131**	**1,178**	**1,224**	**1,270**	**1,294**	**1,294**	**1,294**	**1,294**	**1,294**
Cumulative Retained Earnings							**-840**	**397**	**812**	**1,227**	**1,643**	**2,081**	**2,516**	**2,998**	**3,526**	**4,100**	**4,721**	**5,388**	**6,102**	**6,861**	**7,668**	**8,521**	**9,420**	**10,365**	**11,357**	**12,396**	**13,480**	**14,612**	**15,789**	**17,013**	**18,284**	**19,577**	**20,871**	**22,164**	**23,458**	**24,751**
Balance Sheet																																				
Assets																																				
Fixed Assets																																				
Gross fixed assets							44,962	44,962	44,962	44,962	44,962	44,962	44,962	44,962	44,962	44,962	44,962	44,962	44,962	44,962	44,962	44,962	44,962	44,962	44,962	44,962	44,962	44,962	44,962	44,962	44,962	44,962	44,962	44,962	44,962	44,962
Depreciation (cumulative)							1,349	2,698	4,047	5,395	6,744	8,093	9,442	10,791	12,140	13,489	14,838	16,186	17,535	18,884	20,233	21,582	22,931	24,280	25,628	26,977	28,326	29,675	31,024	32,373	33,722	35,071	36,419	37,768	39,117	40,466
Net fixed assets							43,613	42,264	40,916	39,567	38,218	36,869	35,520	34,171	32,822	31,474	30,125	28,776	27,427	26,078	24,729	23,380	22,031	20,683	19,334	17,985	16,636	15,287	13,938	12,589	11,241	9,892	8,543	7,194	5,845	4,496
Capital work in progress		331	13,654	22,564	31,474	44,962	0	0	0	0	0	0	0	0	0	0	0	0	0	0	0	0	0	0	0	0	0	0	0	0	0	0	0			0
Investment																																				
Total Fixed Assets		331	13,654	22,564	31,474	44,962	43,613	42,264	40,916	39,567	38,218	36,869	35,520	34,171	32,822	31,474	30,125	28,776	27,427	26,078	24,729	23,380	22,031	20,683	19,334	17,985	16,636	15,287	13,938	12,589	11,241	9,892	8,543	7,194	5,845	4,496
Current Assets																																				
Cash and banks from operation							-491	2,095	3,859	5,623	7,387	7,196	7,002	6,854	6,753	6,698	6,689	6,726	6,811	6,941	7,118	7,341	7,611	7,927	8,290	8,698	9,154	9,655	10,204	10,798	11,439	14,081	16,724	19,366	22,009	24,651
Stocks and spares							80	80	80	80	80	80	80	80	80	80	80	80	80	80	80	80	80	80	80	80	80	80	80	80	80	80	80	80	80	80
Accounts receivable							1,168	1,168	1,168	1,168	1,168	1,168	1,168	1,168	1,168	1,168	1,168	1,168	1,168	1,168	1,168	1,168	1,168	1,168	1,168	1,168	1,168	1,168	1,168	1,168	1,168	1,168	1,168	1,168	1,168	1,168
Provision for bad debts							0	0	0	0	0	0	0	0	0	0	0	0	0	0	0	0	0	0	0	0	0	0	0	0	0	0	0	0	0	0
Other short term assets							0	0	0	0	0	0	0	0	0	0	0	0	0	0	0	0	0	0	0	0	0	0	0	0	0	0	0	0	0	0
Total Current Assets							758	3,343	5,108	6,872	8,636	8,445	8,251	8,103	8,001	7,946	7,937	7,975	8,059	8,190	8,366	8,590	8,859	9,176	9,538	9,947	10,402	10,904	11,452	12,047	12,687	15,330	17,972	20,615	23,257	25,900
Total Assets		**331**	**13,654**	**22,564**	**31,474**	**44,962**	**44,371**	**45,608**	**46,023**	**46,438**	**46,854**	**45,314**	**43,771**	**42,274**	**40,824**	**39,420**	**38,062**	**36,751**	**35,486**	**34,268**	**33,096**	**31,970**	**30,891**	**29,858**	**28,872**	**27,932**	**27,038**	**26,191**	**25,390**	**24,636**	**23,928**	**25,222**	**26,515**	**27,809**	**29,102**	**30,396**
Equity & Liabilities																																				
Capital and Reserves																																				
Paid in capital		40	1,638	2,708	3,777	5,395	5,395	5,395	5,395	5,395	5,395	5,395	5,395	5,395	5,395	5,395	5,395	5,395	5,395	5,395	5,395	5,395	5,395	5,395	5,395	5,395	5,395	5,395	5,395	5,395	5,395	5,395	5,395	5,395	5,395	5,395
Revaluation in reserve																																				
Cumulative retained earnings							-840	397	812	1,227	1,643	2,081	2,516	2,998	3,526	4,100	4,721	5,388	6,102	6,861	7,668	8,521	9,420	10,365	11,357	12,396	13,480	14,612	15,789	17,013	18,284	19,577	20,871	22,164	23,458	24,751
Total Capital and Reserves		**40**	**1,638**	**2,708**	**3,777**	**5,395**	**4,555**	**5,792**	**6,207**	**6,623**	**7,038**	**7,476**	**7,912**	**8,393**	**8,921**	**9,496**	**10,116**	**10,783**	**11,497**	**12,257**	**13,063**	**13,916**	**14,815**	**15,761**	**16,753**	**17,791**	**18,876**	**20,007**	**21,185**	**22,409**	**23,679**	**24,973**	**26,266**	**27,560**	**28,853**	**30,147**
Provisions																																				
Security deposits																																				
Contributory provident fund																																				
Total Provisions							0	0	0	0	0	0	0	0	0	0	0	0	0	0	0	0	0	0	0	0	0	0	0	0	0	0	0	0	0	0
Long Term Liabilities																																				
Long term loan - foreign		264	10,923	18,051	25,179	35,970	35,970	35,970	35,970	35,970	34,171	32,373	30,574	28,776	26,977	25,179	23,380	21,582	19,783	17,985	16,186	14,388	12,589	10,791	8,992	7,194	5,395	3,597	1,798		0	0	0	0	0	0
Long term loan - government		26	1,092	1,805	2,518	3,597	3,597	3,597	3,597	3,597	3,417	3,237	3,057	2,878	2,698	2,518	2,338	2,158	1,978	1,798	1,619	1,439	1,259	1,079	899	719	540	360	180	0	0	0	0	0	0	0
Total Long Term Liabilities		291	12,015	19,856	27,697	39,567	39,567	39,567	39,567	39,567	37,588	35,610	33,632	31,653	29,675	27,697	25,718	23,740	21,762	19,783	17,805	15,827	13,848	11,870	9,892	7,913	5,935	3,957	1,978	0	0	0	0	0	0	0
Short Term Liabilities																																				
Current Portion of Long Term Laibilities - forein loans							0	0	0	0	1,798	1,798	1,798	1,798	1,798	1,798	1,798	1,798	1,798	1,798	1,798	1,798	1,798	1,798	1,798	1,798	1,798	1,798	1,798	1,798	0	0	0	0	0	0
Current Portion of Long Term Laibilities - government loans							0	0	0	0	180	180	180	180	180	180	180	180	180	180	180	180	180	180	180	180	180	180	180	180	0	0	0	0	0	0
Short term loan																																				
Accounts payable							249	249	249	249	249	249	249	249	249	249	249	249	249	249	249	249	249	249	249	249	249	249	249	249	249	249	249	249	249	249
Other short term liabilities																																				
Total Short Term Liabilities							249	249	249	249	2,227	2,227	2,227	2,227	2,227	2,227	2,227	2,227	2,227	2,227	2,227	2,227	2,227	2,227	2,227	2,227	2,227	2,227	2,227	2,227	249	249	249	249	249	249
Total Liabilities		291	12,015	19,856	27,697	39,567	39,816	39,816	39,816	39,816	39,816	37,837	35,859	33,881	31,902	29,924	27,946	25,967	23,989	22,011	20,032	18,054	16,076	14,097	12,119	10,141	8,162	6,184	4,206	2,227	249	249	249	249	249	249
Capital & Liabilities		**331**	**13,654**	**22,564**	**31,474**	**44,962**	**44,371**	**45,608**	**46,023**	**46,438**	**46,854**	**45,314**	**43,771**	**42,274**	**40,824**	**39,420**	**38,062**	**36,751**	**35,486**	**34,268**	**33,096**	**31,970**	**30,891**	**29,858**	**28,872**	**27,932**	**27,038**	**26,191**	**25,390**	**24,636**	**23,928**	**25,222**	**26,515**	**27,809**	**29,102**	**30,396**
(Proofing)		0	0	0	0	0	0	0	0	0	0	0	0	0	0	0	0	0	0	0	0	0	0	0	0	0	0	0	0	0	0	0	0	0	0	0

ATTACHMENT 6.8 CASH FLOW STATEMENT & KEY PERFORMANCE INDICATORS

(Taka Million)

		0	2	3	4	5	6	7	8	9	10	11	12	13	14	15	16	17	18	19	20	21	22	23	24	25	26	27	28	29	30	31	32	33	34	35
Fiscal Year Ending at	**Unit**	**2010**	**2011**	**2012**	**2013**	**2014**	**2015**	**2016**	**2017**	**2018**	**2019**	**2020**	**2021**	**2022**	**2023**	**2024**	**2025**	**2026**	**2027**	**2028**	**2029**	**2030**	**2031**	**2032**	**2033**	**2034**	**2035**	**2036**	**2037**	**2038**	**2039**	**2040**	**2041**	**2042**	**2043**	**2044**
Cash Flow Statement																																				
Cash Flow from Operating Activities																																				
Net income before tax							-840	1,501	1,501	1,501	1,501	1,540	1,535	1,612	1,689	1,767	1,844	1,921	1,999	2,076	2,153	2,231	2,308	2,385	2,463	2,540	2,617	2,695	2,772	2,849	2,927	2,965	2,965	2,965	2,965	2,965
Depreciation							1,349	1,349	1,349	1,349	1,349	1,349	1,349	1,349	1,349	1,349	1,349	1,349	1,349	1,349	1,349	1,349	1,349	1,349	1,349	1,349	1,349	1,349	1,349	1,349	1,349	1,349	1,349	1,349	1,349	1,349
Unrealized forex loss (gain)							0	0	0	0	0	0	0	0	0	0	0	0	0	0	0	0	0	0	0	0	0	0	0	0	0	0	0	0	0	0
Tax Paid							0	-264	-601	-601	-601	-616	-614	-645	-676	-707	-738	-769	-799	-830	-861	-892	-923	-954	-985	-1,016	-1,047	-1,078	-1,109	-1,140	-1,171	-1,186	-1,186	-1,186	-1,186	-1,186
Operating Cash Flow							**509**	**2,586**	**2,250**	**2,250**	**2,250**	**2,273**	**2,270**	**2,316**	**2,362**	**2,409**	**2,455**	**2,502**	**2,548**	**2,594**	**2,641**	**2,687**	**2,734**	**2,780**	**2,826**	**2,873**	**2,919**	**2,966**	**3,012**	**3,058**	**3,105**	**3,128**	**3,128**	**3,128**	**3,128**	**3,128**
Decrease /(increase) in stocks and stores							-80	0	0	0	0	0	0	0	0	0	0	0	0	0	0	0	0	0	0	0	0	0	0	0	0	0	0	0	0	0
Decrease /(increase) in receivables							-1,168	0	0	0	0	0	0	0	0	0	0	0	0	0	0	0	0	0	0	0	0	0	0	0	0	0	0	0	0	0
Decrease /(increase) in provision for bad debts							0	0	0	0	0	0	0	0	0	0	0	0	0	0	0	0	0	0	0	0	0	0	0	0	0	0	0	0	0	0
Decrease /(increase) in other short term assets							0	0	0	0	0	0	0	0	0	0	0	0	0	0	0	0	0	0	0	0	0	0	0	0	0	0	0	0	0	0
(Decrease)/increase in payables							249	0	0	0	0	0	0	0	0	0	0	0	0	0	0	0	0	0	0	0	0	0	0	0	0	0	0	0	0	0
(Decrease)/increase in other short term liabilities							0	0	0	0	0	0	0	0	0	0	0	0	0	0	0	0	0	0	0	0	0	0	0	0	0	0	0	0	0	0
Change in Non-cash Working Capital							**-1,000**	**0**	**0**	**0**	**0**	**0**	**0**	**0**	**0**	**0**	**0**	**0**	**0**	**0**	**0**	**0**	**0**	**0**	**0**	**0**	**0**	**0**	**0**	**0**	**0**	**0**	**0**	**0**	**0**	**0**
Change in revaluation reserve							0	0	0	0	0	0	0	0	0	0	0	0	0	0	0	0	0	0	0	0	0	0	0	0	0	0	0	0	0	0
Change in provisions							0	0	0	0	0	0	0	0	0	0	0	0	0	0	0	0	0	0	0	0	0	0	0	0	0	0	0	0	0	0
Change in Reserves and Provisions							0	0	0	0	0	0	0	0	0	0	0	0	0	0	0	0	0	0	0	0	0	0	0	0	0	0	0	0	0	0
Net Cash Flow from Operating Activities							**-491**	**2,586**	**2,250**	**2,250**	**2,250**	**2,273**	**2,270**	**2,316**	**2,362**	**2,409**	**2,455**	**2,502**	**2,548**	**2,594**	**2,641**	**2,687**	**2,734**	**2,780**	**2,826**	**2,873**	**2,919**	**2,966**	**3,012**	**3,058**	**3,105**	**3,128**	**3,128**	**3,128**	**3,128**	**3,128**
Cash Flow from Investment Activities																																				
Capital expenditure		-331	-13,323	-8,910	-8,910	-13,489	0	0	0	0	0	0	0	0	0	0	0	0	0	0	0	0	0	0	0	0	0	0	0	0	0	0	0	0	0	0
Investments in subsidiaries																																				
Net Cash Flow from Invesatment Activities		**-331**	**-13,323**	**-8,910**	**-8,910**	**-13,489**	**0**	**0**	**0**	**0**	**0**	**0**	**0**	**0**	**0**	**0**	**0**	**0**	**0**	**0**	**0**	**0**	**0**	**0**	**0**	**0**	**0**	**0**	**0**	**0**	**0**	**0**	**0**	**0**	**0**	**0**
Cash Flow from Financing Activities																																				
Contribution to equity		40	1,599	1,069	1,069	1,619	0	0	0	0	0	0	0	0	0	0	0	0	0	0	0	0	0	0	0	0	0	0	0	0	0	0	0	0	0	0
Disbursements of foreign loans		264	10,659	7,128	7,128	10,791	0	0	0	0	0	0	0	0	0	0	0	0	0	0	0	0	0	0	0	0	0	0	0	0	0	0	0	0	0	0
Disbursements of government loans		26	1,066	713	713	1,079																														
Repayment of principal on long term debt							0	0	0	0	0	-1,978	-1,978	-1,978	-1,978	-1,978	-1,978	-1,978	-1,978	-1,978	-1,978	-1,978	-1,978	-1,978	-1,978	-1,978	-1,978	-1,978	-1,978	-1,978	0	0	0	0	0
Dividend paid							0	0	-486	-486	-486	-486	-486	-486	-486	-486	-486	-486	-486	-486	-486	-486	-486	-486	-486	-486	-486	-486	-486	-486	-486	-486	-486	-486	-486	-486
Capital redeemed																																				
Subsidies received																																				
Net Cash Flow from Financing		**331**	**13,323**	**8,910**	**8,910**	**13,489**	**0**	**0**	**-486**	**-486**	**-486**	**-2,464**	**-2,464**	**-2,464**	**-2,464**	**-2,464**	**-2,464**	**-2,464**	**-2,464**	**-2,464**	**-2,464**	**-2,464**	**-2,464**	**-2,464**	**-2,464**	**-2,464**	**-2,464**	**-2,464**	**-2,464**	**-2,464**	**-2,464**	**-486**	**-486**	**-486**	**-486**	**-486**
Free Cash Flow							**-491**	**2,586**	**2,250**	**2,250**	**2,250**	**2,273**	**2,270**	**2,316**	**2,362**	**2,409**	**2,455**	**2,502**	**2,548**	**2,594**	**2,641**	**2,687**	**2,734**	**2,780**	**2,826**	**2,873**	**2,919**	**2,966**	**3,012**	**3,058**	**3,105**	**3,128**	**3,128**	**3,128**	**3,128**	**3,128**
Total Cash Flow		**0**	**0**	**0**	**0**	**0**	**-491**	**2,586**	**1,764**	**1,764**	**1,764**	**-191**	**-194**	**-148**	**-102**	**-55**	**-9**	**38**	**84**	**130**	**177**	**223**	**270**	**316**	**362**	**409**	**455**	**502**	**548**	**595**	**641**	**2,642**	**2,642**	**2,642**	**2,642**	**2,642**
Cumulative Cash Flow		**0**	**0**	**0**	**0**	**0**	**-491**	**2,095**	**3,859**	**5,623**	**7,387**	**7,196**	**7,002**	**6,854**	**6,753**	**6,698**	**6,689**	**6,726**	**6,811**	**6,941**	**7,118**	**7,341**	**7,611**	**7,927**	**8,290**	**8,698**	**9,154**	**9,655**	**10,204**	**10,798**	**11,439**	**14,081**	**16,724**	**19,366**	**22,009**	**24,651**
Calculation of Dividend																																				
Cumulative retained earnings before dividend							-840	397	1,298	1,713	2,128	2,567	3,002	3,483	4,011	4,586	5,206	5,874	6,587	7,347	8,153	9,006	9,905	10,851	11,843	12,881	13,966	15,097	16,275	17,499	18,769	20,063	21,356	22,650	23,943	25,237
Check digit if dividend to be payable							NO	OK	OK	OK	OK	OK	OK	OK	OK	OK	OK	OK	OK	OK	OK	OK	OK	OK	OK	OK	OK	OK	OK	OK	OK	OK	OK	OK	OK	OK
Cash available for dividend							509	1,746	2,646	3,062	3,477	3,915	4,351	4,832	5,360	5,935	6,555	7,222	7,936	8,696	9,502	10,355	11,254	12,200	13,192	14,230	15,315	16,446	17,624	18,848	20,118	21,412	22,705	23,999	25,292	26,586
Dividends paid							0	0	486	486	486	486	486	486	486	486	486	486	486	486	486	486	486	486	486	486	486	486	486	486	486	486	486	486	486	486
Key Performance Indicators																																				
Debt Service Coverage Ratio (cash flow	times						-3.55	24.96	17.35	17.35	17.35	0.91	0.91	0.93	0.95	0.97	1.00	1.02	1.04	1.06	1.09	1.11	1.13	1.16	1.18	1.20	1.23	1.25	1.28	1.30	1.32	n.a.	n.a.	n.a.	n.a.	n.a.
Return on Net Fixed Assets (net income/NFA)	%						-1.93%	2.93%	2.20%	2.28%	2.36%	2.51%	2.59%	2.83%	3.09%	3.37%	3.67%	4.01%	4.37%	4.78%	5.22%	5.72%	6.29%	6.92%	7.64%	8.47%	9.44%	10.58%	11.93%	13.58%	15.62%	17.99%	20.83%	24.73%	30.44%	39.57%
Return on Equity (net income/equity)	%						-15.57%	22.93%	16.70%	16.70%	16.70%	17.13%	17.07%	17.93%	18.79%	19.65%	20.51%	21.37%	22.23%	23.09%	23.95%	24.81%	25.67%	26.53%	27.39%	28.25%	29.11%	29.97%	30.83%	31.69%	32.55%	32.98%	32.98%	32.98%	32.98%	32.98%
Quick Ratio ((current assets-Inventory)/current liabilities)	%						272.00%	1310.55%	2019.08%	2727.62%	384.11%	375.54%	366.81%	360.17%	355.62%	353.14%	352.75%	354.44%	358.22%	364.08%	372.02%	382.04%	394.15%	408.35%	424.62%	442.98%	463.42%	485.95%	511%	537%	5063%	6125%	7186%	8247%	9309%	10370%
Debt Equity Ratio Debt/(Debt + Equity)	%						89.73%	87.30%	86.51%	85.74%	84.98%	83.50%	81.92%	80.15%	78.15%	75.91%	73.42%	70.66%	67.60%	64.23%	60.53%	56.47%	52.04%	47.21%	41.98%	36.31%	30.19%	23.61%	16.56%	9.04%	1.04%	0.99%	0.94%	0.90%	0.86%	0.82%
Current Ratio (current assets/current liabilities)	%						304.3%	1342.8%	2051.4%	2759.9%	387.7%	379.1%	370.4%	363.8%	359.2%	356.8%	356.4%	358.1%	361.8%	367.7%	375.6%	385.7%	397.8%	412.0%	428.2%	446.6%	467.0%	489.6%	514.2%	540.9%	5095.7%	6157.0%	7218.3%	8279.6%	9340.9%	10402.2%
Account Receivable Turnover	times						6.00	6.00	6.00	6.00	6.00	6.00	6.00	6.00	6.00	6.00	6.00	6.00	6.00	6.00	6.00	6.00	6.00	6.00	6.00	6.00	6.00	6.00	6.00	6.00	6.00	6.00	6.00	6.00	6.00	6.00
Operating Ratio (operating cost/total revenue)	%						89.92%	56.51%	56.51%	56.51%	56.51%	56.51%	57.69%	57.69%	57.69%	57.69%	57.69%	57.69%	57.69%	57.69%	57.69%	57.69%	57.69%	57.69%	57.69%	57.69%	57.69%	57.69%	57.69%	57.69%	57.69%	57.69%	57.69%	57.69%	57.69%	57.69%
Self-financing ratio (funds from intl source/ave of capex)	%						n.a.	n.a.	n.a.	n.a.	n.a.	n.a.	n.a.	n.a.	n.a.	n.a.	n.a.	n.a.	n.a.	n.a.	n.a.	n.a.	n.a.	n.a.	n.a.	n.a.	n.a.	n.a.	n.a.	n.a.	n.a.	n.a.	n.a.	n.a.	n.a.

Legend =Data undermining the standard leve

ATTACHMENT 6.9 CAPITAL & OPERATIONAL COST (EIRR)

(Taka Million)

		0	1	2	3	4	5	6	7	8	9	10	11	12	13	14	15	16	17	18	19	20	21	22	23	24	25	26	27	28	29	30	31	32	33	34
Fiscal Year Ending at	**Unit**	**2010**	**2011**	**2012**	**2013**	**2014**	**2015**	**2016**	**2017**	**2018**	**2019**	**2020**	**2021**	**2022**	**2023**	**2024**	**2025**	**2026**	**2027**	**2028**	**2029**	**2030**	**2031**	**2032**	**2033**	**2034**	**2035**	**2036**	**2037**	**2038**	**2039**	**2040**	**2041**	**2042**	**2043**	**2044**
Gross Annual Energy Output (GWh)							2,242	2,242	2,242	2,242	2,242	2,242	2,242	2,242	2,242	2,242	2,242	2,242	2,242	2,242	2,242	2,242	2,242	2,242	2,242	2,242	2,242	2,242	2,242	2,242	2,242	2,242	2,242	2,242	2,242	2,242
Net Annual Energy Output (GWh)							2,177	2,177	2,177	2,177	2,177	2,177	2,177	2,177	2,177	2,177	2,177	2,177	2,177	2,177	2,177	2,177	2,177	2,177	2,177	2,177	2,177	2,177	2,177	2,177	2,177	2,177	2,177	2,177	2,177	2,177
Electricity Sales							24,076	24,076	24,076	24,076	24,076	24,076	24,076	24,076	24,076	24,076	24,076	24,076	24,076	24,076	24,076	24,076	24,076	24,076	24,076	24,076	24,076	24,076	24,076	24,076	24,076	24,076	24,076	24,076	24,076	24,076
Capital Expenditure (cumulative)		284	10,643	17,573	24,502	35,003																														
Foreign Currency		220	8,657	14,300	19,942	28,489																														
Local Currency		63	1,986	3,273	4,560	6,514																														
Fund Raising (Balance at Year End)																																				
Equity (Cumulative Investment)		34	1,277	2,109	2,940	4,200	4,200	4,200	4,200	4,200	4,200	4,200	4,200	4,200	4,200	4,200	4,200	4,200	4,200	4,200	4,200	4,200	4,200	4,200	4,200	4,200	4,200	4,200	4,200	4,200	4,200	4,200	4,200	4,200	4,200
Loan Balance (foreign)		227	8,514	14,058	19,602	28,003	28,003	28,003	28,003	28,003	28,003	26,602	25,202	23,802	22,402	21,002	19,602	18,202	16,802	15,401	14,001	12,601	11,201	9,801	8,401	7,001	5,601	4,200	2,800	1,400	(0)	(0)	(0)	(0)	(0)	(0)
Loan Balance (local)		23	851	1,406	1,960	2,800	2,800	2,800	2,800	2,800	2,800	2,660	2,520	2,380	2,240	2,100	1,960	1,820	1,680	1,540	1,400	1,260	1,120	980	840	700	560	420	280	140	0	0	0	0	0	0
Repayment of Loans																																				
Foreign Loan Repayment							0	0	0	0	0	1,400	1,400	1,400	1,400	1,400	1,400	1,400	1,400	1,400	1,400	1,400	1,400	1,400	1,400	1,400	1,400	1,400	1,400	1,400	0	0	0	0	0
Local Loan Repayment							0	0	0	0	0	140	140	140	140	140	140	140	140	140	140	140	140	140	140	140	140	140	140	140	0	0	0	0	0
Equity																																				
Increase of Equity							0	0	0	0	0	0	0	0	0	0	0	0	0	0	0	0	0	0	0	0	0	0	0	0	0	0	0	0	0
Redemption of Equity							0	0	0	0	0	0	0	0	0	0	0	0	0	0	0	0	0	0	0	0	0	0	0	0	0	0	0	0	0
Fixed Cost (Foreign)																																				
LTSA (initial spare parts)							1,801																													
LTSA (maintenance)							552	552	552	552	552	552																								
Loan Interest (Foreign)							1,120	1,120	1,120	1,120	1,120	1,092	1,036	980	924	868	812	756	700	644	588	532	476	420	364	308	252	196	140	84	28	(0)	(0)	(0)	(0)	(0)
Fixed Cost (Local)																																				
O & M (Fixed)							300	300	300	300	300	300	300	300	300	300	300	300	300	300	300	300	300	300	300	300	300	300	300	300	300	300	300	300	300
Depreciation							1,050	1,050	1,050	1,050	1,050	1,050	1,050	1,050	1,050	1,050	1,050	1,050	1,050	1,050	1,050	1,050	1,050	1,050	1,050	1,050	1,050	1,050	1,050	1,050	1,050	1,050	1,050	1,050	1,050	1,050
Return on Equity							630	630	630	630	630	630	630	630	630	630	630	630	630	630	630	630	630	630	630	630	630	630	630	630	630	630	630	630	630	630
Loan Interest (Local)							108	108	108	108	108	105	100	94	89	84	78	73	67	62	57	51	46	40	35	30	24	19	13	8	3	0	0	0	0	0
Variable Cost (Foreign)																																				
O & M (Variable)							605	605	605	605	605	605	605	605	605	605	605	605	605	605	605	605	605	605	605	605	605	605	605	605	605	605	605	605	605
O&M Adjustment during LTSA							-552	-552	-552	-552	-552	-552	0	0	0	0	0	0	0	0	0	0	0	0	0	0	0	0	0	0	0	0	0	0	0
Net O&M (variable)							53	53	53	53	53	53	605	605	605	605	605	605	605	605	605	605	605	605	605	605	605	605	605	605	605	605	605	605	605	605
Variable Cost (Local)																																				
Fuel Cost							12,914	12,914	12,914	12,914	12,914	12,914	12,914	12,914	12,914	12,914	12,914	12,914	12,914	12,914	12,914	12,914	12,914	12,914	12,914	12,914	12,914	12,914	12,914	12,914	12,914	12,914	12,914	12,914	12,914	12,914
O & M (Variable)							59	59	59	59	59	59	59	59	59	59	59	59	59	59	59	59	59	59	59	59	59	59	59	59	59	59	59	59	59	59
Salvage Value																																				
Land																																				0
Plant																																				3,500
Annual Costs							18,588	16,787	16,787	16,787	16,787	16,756	16,695	16,634	16,572	16,511	16,449	16,388	16,327	16,265	16,204	16,142	16,081	16,020	15,958	15,897	15,835	15,774	15,713	15,651	15,590	15,559	15,559	15,559	15,559	15,559
Total Fixed Costs							5,562	3,761	3,761	3,761	3,761	3,730	3,116	3,055	2,994	2,932	2,871	2,809	2,748	2,687	2,625	2,564	2,502	2,441	2,380	2,318	2,257	2,195	2,134	2,073	2,011	1,980	1,980	1,980	1,980	1,980
Total Variable Costs							13,026	13,026	13,026	13,026	13,026	13,026	13,579	13,579	13,579	13,579	13,579	13,579	13,579	13,579	13,579	13,579	13,579	13,579	13,579	13,579	13,579	13,579	13,579	13,579	13,579	13,579	13,579	13,579	13,579	13,579
Profit before Tax							6,118	7,919	7,919	7,919	7,919	7,950	8,011	8,072	8,134	8,195	8,257	8,318	8,379	8,441	8,502	8,564	8,625	8,686	8,748	8,809	8,871	8,932	8,993	9,055	9,116	9,147	9,147	9,147	9,147	9,147
Income Tax							2,447	3,168	3,168	3,168	3,168	3,180	3,204	3,229	3,253	3,278	3,303	3,327	3,352	3,376	3,401	3,425	3,450	3,475	3,499	3,524	3,548	3,573	3,597	3,622	3,646	3,659	3,659	3,659	3,659	3,659
EIRR under the Logical Willingness-to-Pay																																				
Economic Benefit							24,076	24,076	24,076	24,076	24,076	24,076	24,076	24,076	24,076	24,076	24,076	24,076	24,076	24,076	24,076	24,076	24,076	24,076	24,076	24,076	24,076	24,076	24,076	24,076	24,076	24,076	24,076	24,076	24,076	27,576
Capital Cost		284	10,359	6,930	6,930	10,501																														
Operation Cost							15,680	13,879	13,879	13,879	13,879	13,879	13,879	13,879	13,879	13,879	13,879	13,879	13,879	13,879	13,879	13,879	13,879	13,879	13,879	13,879	13,879	13,879	13,879	13,879	13,879	13,879	13,879	13,879	13,879	13,879
Economic Benefit - Economic Cost		-284	######	-6,930	-6,930	######	8,396	10,197	10,197	10,197	10,197	10,197	10,197	10,197	10,197	10,197	10,197	10,197	10,197	10,197	10,197	10,197	10,197	10,197	10,197	10,197	10,197	10,197	10,197	10,197	10,197	10,197	10,197	10,197	10,197	13,697
EIRR		**20.64%**																																		

Legend =O&M Cost

ATTACHMENT 6.10 ECONOMIC INTERNAL RATE OF RETURN

(Taka Million)

Fiscal Year	Economic Cost (A)			Economic Benefit (B)	(B) - (A)
	Capital	O&M	Total Cost		
2010	284		284		-284
2011	10,359		10,359		-10,359
2012	6,930		6,930		-6,930
2013	6,930		6,930		-6,930
2014	10,501		10,501		-10,501
2015		15,680	15,680	24,076	8,396
2016		13,879	13,879	24,076	10,197
2017		13,879	13,879	24,076	10,197
2018		13,879	13,879	24,076	10,197
2019		13,879	13,879	24,076	10,197
2020		13,879	13,879	24,076	10,197
2021		13,879	13,879	24,076	10,197
2022		13,879	13,879	24,076	10,197
2023		13,879	13,879	24,076	10,197
2024		13,879	13,879	24,076	10,197
2025		13,879	13,879	24,076	10,197
2026		13,879	13,879	24,076	10,197
2027		13,879	13,879	24,076	10,197
2028		13,879	13,879	24,076	10,197
2029		13,879	13,879	24,076	10,197
2030		13,879	13,879	24,076	10,197
2031		13,879	13,879	24,076	10,197
2032		13,879	13,879	24,076	10,197
2033		13,879	13,879	24,076	10,197
2034		13,879	13,879	24,076	10,197
2035		13,879	13,879	24,076	10,197
2036		13,879	13,879	24,076	10,197
2037		13,879	13,879	24,076	10,197
2038		13,879	13,879	24,076	10,197
2039		13,879	13,879	24,076	10,197
2040		13,879	13,879	24,076	10,197
2041		13,879	13,879	24,076	10,197
2042		13,879	13,879	24,076	10,197
2043		13,879	13,879	24,076	10,197
2044		13,879	13,879	27,576	13,697
Total	35,003	418,171	453,174	725,778	272,603
EIRR			**20.64%**		