Probable area of cooperation with JICA

1. **Reduction of Boiler Dry Flue Gas losses** (Air Heater exit gas temperature is around 15 to 20 C higher than design):

Boiler

i. Study to suggest solutions using Boiler modeling and other performance diagnostic tools for problems like shortfall in Main Steam / Hot Reheat temperature, high RH sprays, boiler left – right temperature imbalance, superheater / reheater tubes metal temperature increase, high AH inlet / outlet flue gas temperature and other heat transfer areas / design related problems
ii. Combustion optimization techniques
iii. Experience sharing in the areas of works done for improving steam parameters through modification in boilers
iv. Technologies to reduce boiler erosion in boiler second pass
v. Techniques for assessment of air ingress level and air ingress points in the boiler
vi. Techniques to reduce air ingress from boiler pent house
vii. Techniques to increase burner life (in some cases, the burner life is very low)
viii. Furnace - flue gas temperature and composition measurement techniques
ix. Boiler soot blowing optimization techniques

Air Heater

x. Air heater improved seals to keep the AH leakages below 8 - 10% on sustainable basis; currently leakages 12 – 20% (depending on type of AH).
xi. On line AH seal gaps measurement
xii. Improved techniques for online air heater cleaning
xiii. AH cleaning practices during OH – for effective cleaning in shorter duration
xiv. Other AH related O&M strategy to bring the flue gas temp at AH outlet around 125 C

2. **Turbine performance improvement**

i. Condition assessment techniques of turbine internals (blades, diaphragms, gaps, seals etc.
ii. Turbine on line performance diagnostics tools and capabilities
iii. Measures for efficiency improvement of turbines (HP / IP / LP Turbine)
iv. In-situ repair of turbine internals (inter-stage seals etc)
v. Improved in turbine tip seals and gland seals
vi. LP Turbine efficiency assessment and computation

3. **Turbine Auxiliaries**
   i. FW flow calibration
   ii. Condenser air ingress assessment techniques and identification of air ingress points
   iii. Condenser tube cleaning techniques
   iv. Sharing of practices on usage of sea water as CW water and measures taken to counter the problems

4. **Overhauls**
   i. Tools, techniques and systems used to increase the gap between two overhauls
   ii. Strategy for reducing duration of overhaul
   iii. Boiler inspection techniques during overhaul

5. System and practices for archiving boiler inspection, maintenance and design related information for analysis

6. **Involvement of Japanese Institutions and Utilities in the cooperation**

7. **Supercritical Plants**
   i. Development of O&M manual covering best practices of Japan Utilities to have high availability and efficient operation
   ii. Dos and Donts of supercritical units

8. **Cooling Tower** – suggested improvements and optimization

9. **Predictive maintenance technology** and tools such as thermography, boroscopes etc
10. Predictive maintenance for GSU Transformers

下記2名と打合時入手.
G.M. (R&M Engg) : Mr. M.P. SINGH
Dy G.M. (〃) : Mr. R. Ireenivasam (本ニートを準備)

1. NEED FOR RENOVATION & MODERNISATION

Renovation & Modernisation of these units has been contemplated in the near future due to the following:

(10数年)

- The units have already clocked more than 1,00,000 hours of operation
- T.G共に高圧(高温)部 The residual life assessment studies of the unit have revealed deterioration in the material properties of turbine & boiler pressure parts which are continuously subjected to high temperature & pressure during their operation.
- ボイラ補機 The coal quality supplied to the power plant over the years has also under gone changes due to which limitations at time are felt in some of the boiler auxiliaries.
- 古い設計のST The steam turbines installed are of earlier design. The operational efficiency of these turbines are inferior in comparison to the present generation of steam turbines.
- 環境規制 厳格化 The environmental norms over the year have become stringent and the plant will be required to operate within the statutory norms.
- Stringent regulation of the grid.

2. RATIONALE FOR R&M:

Renovation & Modernisation has been seen as the quickest and most cost effective option to continue generation from old power stations. It gives the opportunity to leverage the technological advancement which has taken place in the power industry so as to continue economical power generation.

The introduction of advance technologies is expected to result in:

- Improved efficiency of Boiler & Turbine
- Enhancement of Plant capacity.
- Reduce green house gases & Pollutants.
- CDM benifits
- Over come obsolescence 老朽化
- Extended life of the plant
- Better operational flexibility & reliability.

By proper selection of technologies & feasible R&M solutions, it will be possible to not only achieve the above results but also remain competitive towards cost of delivered power.

R&M Groupの考え方と実施対象の概要を示す。

3. RENOVATION & MODERNISATION TECHNOLOGY OPTION

Possible technology options for R&M in different areas:

a) STEAM GENERATOR & AUXILIARIES

SH/RH 蒸気条件 UP?

- Adoption of higher steam parameters in Super heaters / Re-heaters cycle to achieve higher efficiency.

低NOx化

- Coal mill up gradation, combustion optimization technique, introduction of low nox burners, Fuel staging (re burning or three stage combustion) / Flue gas mixing and / or Flue gas recirculation to reduce green house gases.
- Fuel flexibility upgrades / co-firing options,

微粉炭炉 → 流動床化

- Conversion of existing PF fired boiler to CFBC boiler for low emission to achieve CDM benefits.
- CFD technology for uniform gas flow in various ducts in order to reduce auxiliary power consumption.

(電気集塵機 / バグフィルター)

- ESP up gradation to reduce particulate emission/flue gas conditioning / bag filter.

b) STEAM TURBINE & AUXILIARIES

高効率翼 シール改善

- Up rating of HP, IP & LP turbine modules with latest state of the art modules involving improved blading, improvised sealing arrangement, in order to achieve higher output & efficiency on the existing footprint.

復水器チタン管化 加熱器ステンレス化

- Use of the advanced materials for various equipments to reduce failures and improve maintenance overhauls. e.g. Use of titanium tubes in condenser, use of stainless steel for re generative heaters etc..
- Suggest ways of utilizing the steam available over & above the requirement of normal turbine operation i.e margin between Turbine Max. Continuous Rating (TMCR flow) and Boiler steaming rate (BMCR flow).
- Suggest measures for reducing Auxiliary power consumption of the plant.

以下

c) CONTROL & INSTRUMENTATION

Adoption of latest state of the art includes:

- PADO (Plant performance analysis & optimization software)
- BPOS (Boiler performance optimization software)
- BFAS (Boiler flame analysis system)

d) ELECTRICAL SYSTEMS

- Generator capability improvement measures
- Transformer capability improvement measures

e) BALANCE OF PLANT SYSTEMS

- Effluent treatment system to achieve zero discharge and meet environment norms.
- High concentration ash slurry disposal.

USAIDの協力のもと作成した Energy & Efficiency Management sys.
（対応マニュアル（約120頁）の序文および目次

Preface

A document on "Energy & Efficiency Management System' was prepared for coal stations and issued in the year 2005 with an aim to implement uniform system of efficiency monitoring, performance testing, performance gap assessment, calculations of key performance indicators and reporting. The document got an overwhelming response and the system has been implemented in all NTPC stations. This has facilitated accurate assessment of efficiency gaps of different components and development of appropriate Heat rate recovery action plans. The approach has yielded benefits and overall improvement in efficiency in all NTPC stations has been observed.

We had invited comments on the document from the users on the contents, coverage, tests frequency reporting formats on efficiency gaps etc. from stations and regions / CC. CenPEEP team also visited all NTPC stations and obtained direct feedback on manual, calculation procedures and improvements based on experience of use. A need was felt to revise the document to include various observations of stations, other users and additional points not covered earlier. Accordingly, the document has been revised.

Unaccountable HR losses are currently one of the major areas of concern and vary from 10 kcal to 100 kcal in stations. To give due importance to this, a chapter has been added on the unaccountable losses; it describes calculation methodologies and strategies for reduction of unaccountable losses. We have also included methodology for calculation of losses on account of TDBFP.

Globally, turbine cycle and boiler math models are widely used for accurate performance analysis and assessment. CenPEEP has been striving hard to popularize uses of math models. It has also organized training and demonstration programs on modeling and analysis. As a natural corollary to this effort, we have added a chapter on modeling of plant and equipments, methodologies and likely benefits.

Some fine tuning has also been done in calculations and related procedure as well. The reporting format has also been modified to bring out the performance gaps more accurately with focus on exceptions in HR recovery action plan and its implementation. We have also added latest learnings that has taken place through trainings and visits of external experts to India and visits of NTPC engineers to utilities in Europe & USA.

We are sure that this revised document shall be useful to the people involved in the day to day activity of efficiency monitoring and its improvement at station, region and corporate. This document shall also be useful as a reference document for both the newcomers and the practicing engineers.

CONTENTS

Section			Page
1.0	INTRODUCTION		
	1.1	Objective	1-2
2.0	DEFINITION 2-1		
3.0	HEAT RATE ASSESSMENT		
	3.1	Monitoring Of Primary Process Indicators	3-1
	3.2	Heat Rate Deviation Trending	3-7
	3.3	Parameters To Be Tracked	3-9
4.0	BASELINE FOR PERFORMANCE COMPARISION		
	4.1	Design	4-1
	4.2	Performance Guarantee Test	4-1
	4.3	Historical Operating Data	4-2
	4.4	Benchmarking Of Similar Units	4-2
	4.5	"Expected" Performance	4-3
5.0	METHODOLOGY OF HEAT RATE DEVIATION CALCULATION		
	5.1	Data Collection Methodology	5-1
	5.2	Deviation Calculation Methodology	5-1
	5.3	Monthly & Weekly Heat Rate Deviation	5-15
6.0	PERIODIC TESTING WITH ONLINE INSTRUMENT		
	6.1	Introduction	6-1
	6.2	Types of Tests	6-1
	6.3	Testing Frequency	6-9
7.0	INSTRUMENTATION		
	7.1	Test Equipment Calibration	7-1
	7.2	Instrument Installation & Setup	7-5
	7.3	Calibration Schedule of Instruments	7-9
	7.4	Accuracy Level of Test Instrument	7-10
	7.5	Test Equipment Matrix	7-11
	7.6	Test Equipments For EEEMG Lab Setup	7-12
8.0	Typical Test Procedures		
	8.1	HP/IP Turbine Efficiency Test	8.1-1
	8.2	Gross Turbine Cycle Heat Rate Test	8.2-1
	8.3	HP Heater Performance Test	8.3-1
	8.4	Condenser Performance Test	8.4-1
	8.5	Cooling Tower Thermal Performance Test	8.5-1
	8.6	Mill Performance Test	8.6-1
	8.7	Air Heater Performance Test	8.7-1
	8.8	Boiler Efficiency Test	8.8-1
	8.9	Deaerator Drop Test	8.9-1
	8.10	TD BFP Test	8.10-1
9.0	HEATRATE ACTION PLAN		
	9.1	Preparation of action Plan	9-1
	9.2	Calculate Unit, Station HR	9-2

Section			Page
	9.3	Review the Plan	9-2
	9.4	Annual Targeting	9-3
10.0	REPORTING SYSTEM AND FORMATS		
	10.1	Introduction	10-1
	10.2	Periodic Review Meeting at Station	10-1
11.0	EEMG STRUCTURE AND RESPONSIBILITY		
	11.1	EEMG Setup - Station	11-1
	11.2	Setup at Region	11-4
	11.3	Setup at Corporate Center	11-5
12.0	TOOLS		
	12.1	Introduction	12-1
	12.2	Comprehensive Thermal Kit	12-1
	12.3	Thermodynamic Model of the Plant	12-8
13.0	UNACCOUNTABLE LOSS		
	13.1	Introduction	13-1
	13.2	Calculation of Unaccountable Loss	13-2
	13.3	Unaccounted Losses & its reduction	13-3
14.0	HEAT RATE IMPROVEMENT ACTIVITIES		
	14.1	Introduction	14-1
	14.2	Improved Condenser Cleanliness	14-1
	14.3	Condenser Air In-leakage	14-2
	14.4	Improved Cycle Isolation	14-4
	14.5	Milling System	14-5
	14.6	Optimised Furnace O_2 Operation	14-7
	14.7	Attemperation Valves Passing	14-7
	14.8	Instrument Calibration	14-8
	14.9	Boiler Cleanliness	14-9
	14.10	Flue Gas Analysis	14-10
	14.11	High Exit Gas Temperature	14-10
	14.12	HP/IP/LP Efficiency	14-12
	14.13	HP Heater Performance	14-12
	14.14	CT High Cold Water Temperature	14-14
	14.15	Variable Speed Drives for Major Auxiliaries	14-15
	14.16	Infrared Thermography and Ultrasonic Acoustics	14-15
15.0	MATH MODELLING OF POWER PLANT		
	15.1	Introduction	15-1
	15.2	What is modeling?	15-1
	15.3	Power Plant Applications	15-2
	15.4	Methodology	15-3
	15.5	Performance prediction under off design Conditions	15-3
	15.6	Boiler Applications	15-6
	15.7	Approach / Strategy	15-6
	15.8	CenPEEP Initiative	15-7
	15.9	Conclusion	15-8
16.0	FAULT TREES		16-1

(5) **DADRI (Coal)**

Name of Power Plant:	Dadrii Coal
State:	Uttar Pradesh
Region:	National Capital Region

Unit No.	Unit Capacity (MW)	Units Commissioned	Boiler		Type of fuel	Turbine		Generator				Power Factor
			Manufacturer	Type		Manufacturer	Type	Manufacturer	Type	Capacity (MVA)	Voltage (kV)	
I	210	Oct. 1991	BHEL	CE	Coal	BHEL	KWU	BHEL	THW	247	16.5	0.85
II	210	Dec. 1992	BHEL	CE	Coal	BHEL	KWU	BHEL	THW	247	16 5	0.85
III	210	Mar. 1993	BHEL	CE	Coal	BHEL	KWU	BHEL	THW	247	16.5	0.85
IV	210	Mar. 1994	BHEL	CE	Coal	BHEL	KWU	BHEL	THW	247	16.5	0.85
Installed Capacity	840											

IBRD

THW – Hydrogen & Water Cooled

No.	Name of Power Plant	Number of Units X Capacity (MW)	Total Capacity) (MW) (07-08)	Annual Generation) (GWh) (07-08)	Plant Load Factor (PLF)) (%) 07-08	Heat Rate at Maximum Load (kcal/kWh) 07-08	Gross Calorific Value of Fuel (kcal/kg) March'08	Fuel Cost		Operation & Maintenance Cost)(07-08 up to Feb'08)		Fuel Type
								RS/ton (March'08)	RS/Mkcal	Fixed (P/kWh)	Variable (Rs/kWh)	
	Northern Region											
1	Singrauli	5X200+2X500	2,000	16,105	91.67		3,568					Coal
2	Rihand	4X500	2,000	16,763	95 42		3,810					Coal
3	Unchahar	2X210+2X210+1X210	1,050	9,010	97.69		3,681					Coal
4	Tanda	4X110	440	3,542	91 66		3,682					Coal
	National Capital Region											
5	Dadri (Coal)	4X210MW	840	7,232	98.02		3,724					Coal
6	Anta	3X88.71 GT+1X153.2 ST										
7	Auraiya	4X110 GT+2X106 ST										
8	Dadri (Gas)	4X131 GT+2X146.5 ST										
9	Faridabad	2X143 GT+1X144 ST										
10	Badarpur	3X95+2X210	705	5,354	86.46		3,700					Coal
	Western Region											
11	Korba	3X200+3X500+1X500	2,100	17,731	96.12		3,456					Coal
12	Vindhyachal	6X210+2X500+2X500	3,260	25,888	92.68		3,645					Coal
13	Kawas	4X106 GT+2X110 5 ST										
14	Jhanor-Gandhar	3X131 GT+1X255 ST										
	Eastern Region											
15	Farakka	3X200+2X500	1,600	11,739	83.53		3,053					Coal
16	Kahalgaon	4X210	840	6,765	91 69		2,882					Coal
17	Talcher-Kaniha	6X500	3,000	24,762	93.97		3,216					Coal
18	Talcher-Thermal	4X60+2X110	460	3,489	86.35							Coal
	Southern Region											
19	Ramagundam	3X200+3X500+1X500	2,600	20,588	90 14		2,847					Coal
20	Simhadri	2X500	1,000	7,780	88.57		3,353					Coal
21	Rajiv Gandhi CCPP Kayamkulam	2X115 2 GT+1X129.177 ST										
	Total				92.24							

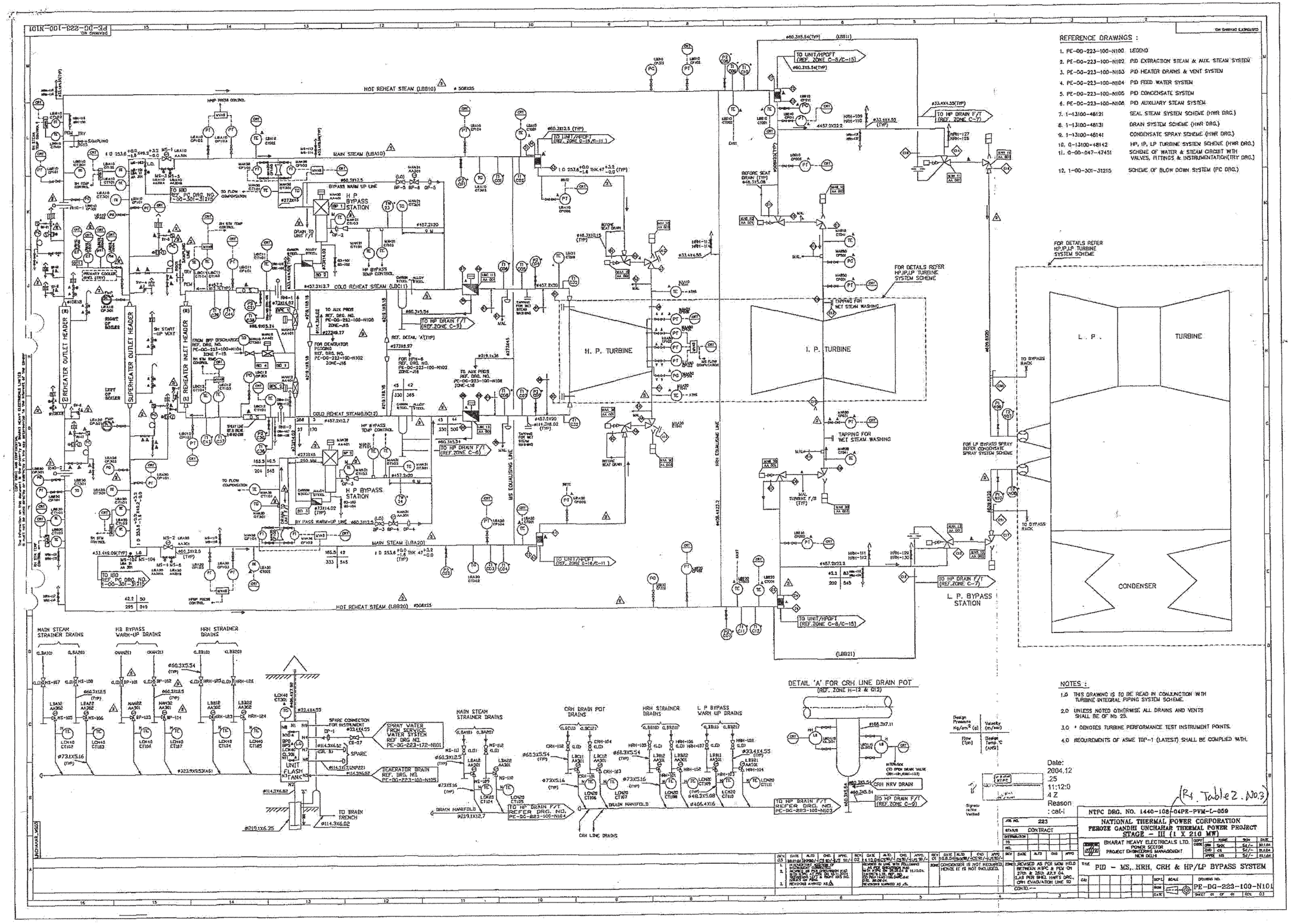
REFERENCE DRAWINGS :
1. PE-DG-223-100-N100 LEGEND
2. PE-DG-223-100-N102 P/D EXTRACTION STEAM & AUX. STEAM SYSTEM
3. PE-DG-223-100-N103 P/D HEATER DRAINS & VENT SYSTEM
4. PE-DG-223-100-N104 P/D FEED WATER SYSTEM
5. PE-DG-223-100-N105 P/D CONDENSATE SYSTEM
6. PE-DG-223-100-N106 P/D AUXILIARY STEAM SYSTEM
7. 1-13100-48121 SEAL STEAM SYSTEM SCHEME (HWR DRG.)
8. 1-13100-48131 DRAIN SYSTEM SCHEME (HWR DRG.)
9. 1-13100-48141 CONDENSATE SPRAY SCHEME (HWR DRG.)
10. 0-13100-48142 HP, IP, LP TURBINE SYSTEM SCHEME (HWR DRG.)
11. 0-00-047-47451 SCHEME OF WATER & STEAM CIRCUIT WITH VALVES, FITTINGS & INSTRUMENTATION(TRT DRG.)
12. 1-00-301-31215 SCHEME OF BLOW DOWN SYSTEM (PC DRG.)
NOTES :
1.0 THIS DRAWING IS TO BE READ IN CONJUNCTION WITH TURBINE INTEGRAL PIPING SYSTEM SCHEME.
2.0 UNLESS NOTED OTHERWISE ALL DRAINS AND VENTS SHALL BE OF No. 25.
3.0 * DENOTES TURBINE PERFORMANCE TEST INSTRUMENT POINTS.
4.0 REQUIREMENTS OF ASME TDP-1 (LATEST) SHALL BE COMPLIED WITH.
H. P. TURBINE
I. P. TURBINE
L. P.
TURBINE
CONDENSER
L. P. BYPASS STATION
H. P. BYPASS STATION
HOT REHEAT STEAM (LBB10)
MAIN STEAM (LBA10)
COLD REHEAT STEAM (LBC11)
COLD REHEAT STEAM(LBC12)
HOT REHEAT STEAM (LBB20)
MAIN STEAM (LBA20)
(LBB21)
SUPERHEATER OUTLET HEADER
REHEATER OUTLET HEADER
REHEATER INLET HEADER
MAIN STEAM STRAINER DRAINS
HB BYPASS WARM-UP DRAINS
HRH STRAINER DRAINS
CRH DRAIN POT DRAINS
L P BYPASS WARM UP DRAINS
DETAIL 'A' FOR CRH LINE DRAIN POT
(REF. ZONE H-12 & G12)
UNIT FLASH TANK
TO BRAIN TRENCH
CRH LINE DRAINS
NTPC DRG. NO. 1440-108-04PR-PVM-L-059
NATIONAL THERMAL POWER CORPORATION
FEROZE GANDHI UNCHAHAR THERMAL POWER PROJECT
STAGE – III (1 X 210 MW)
BHARAT HEAVY ELECTRICALS LTD.
POWER SECTOR
PROJECT ENGINEERING MANAGEMENT
NEW DELHI
P&ID – MS, HRH, CRH & HP/LP BYPASS SYSTEM
PE-DG-223-100-N101
Date: 2004.12.25 11:12:04 Z
Reason : cat-I
(R4. Table 2. No.3)

4－3－A ②UNICHAHAR THERMAL POWER STATION

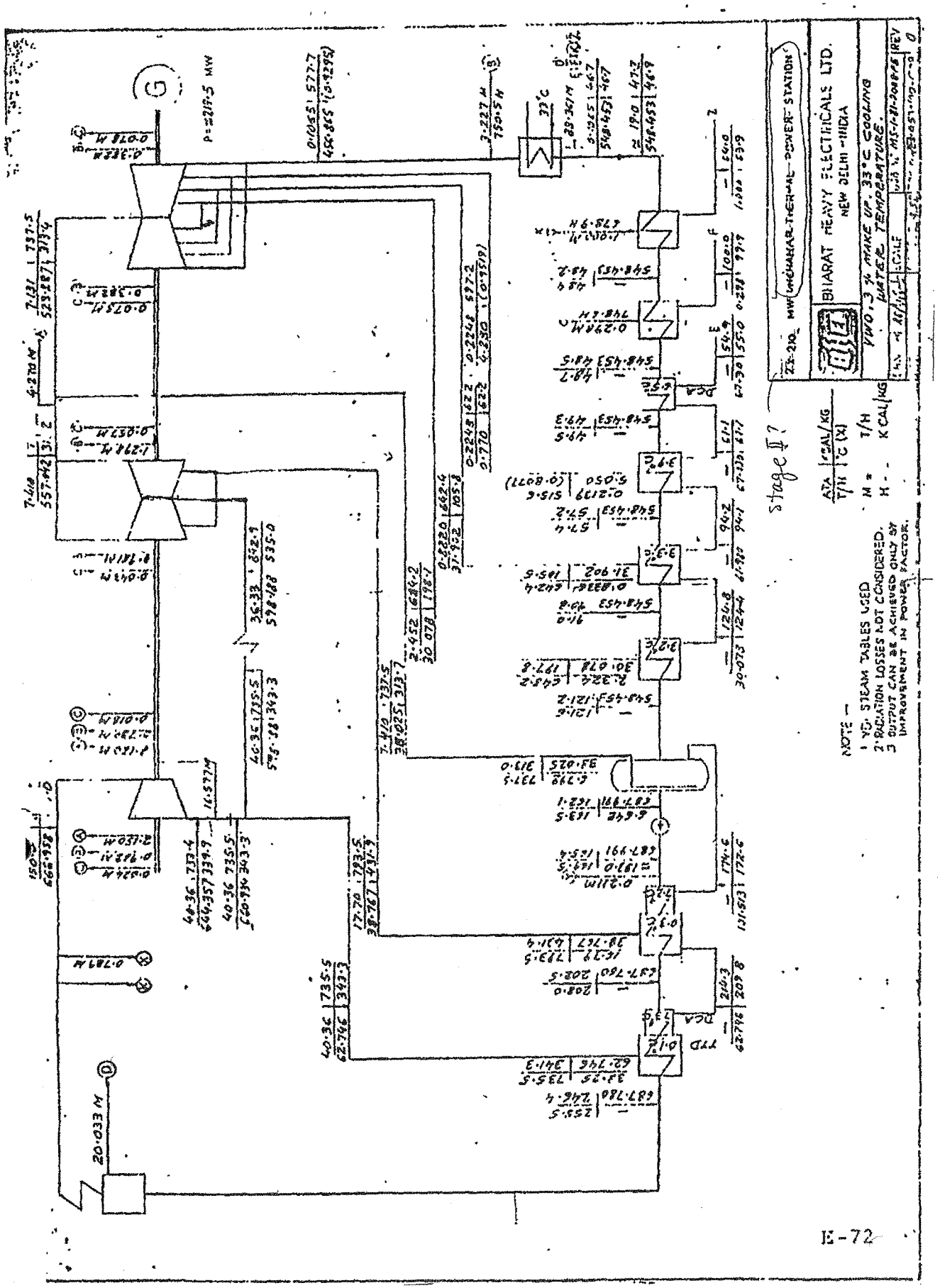

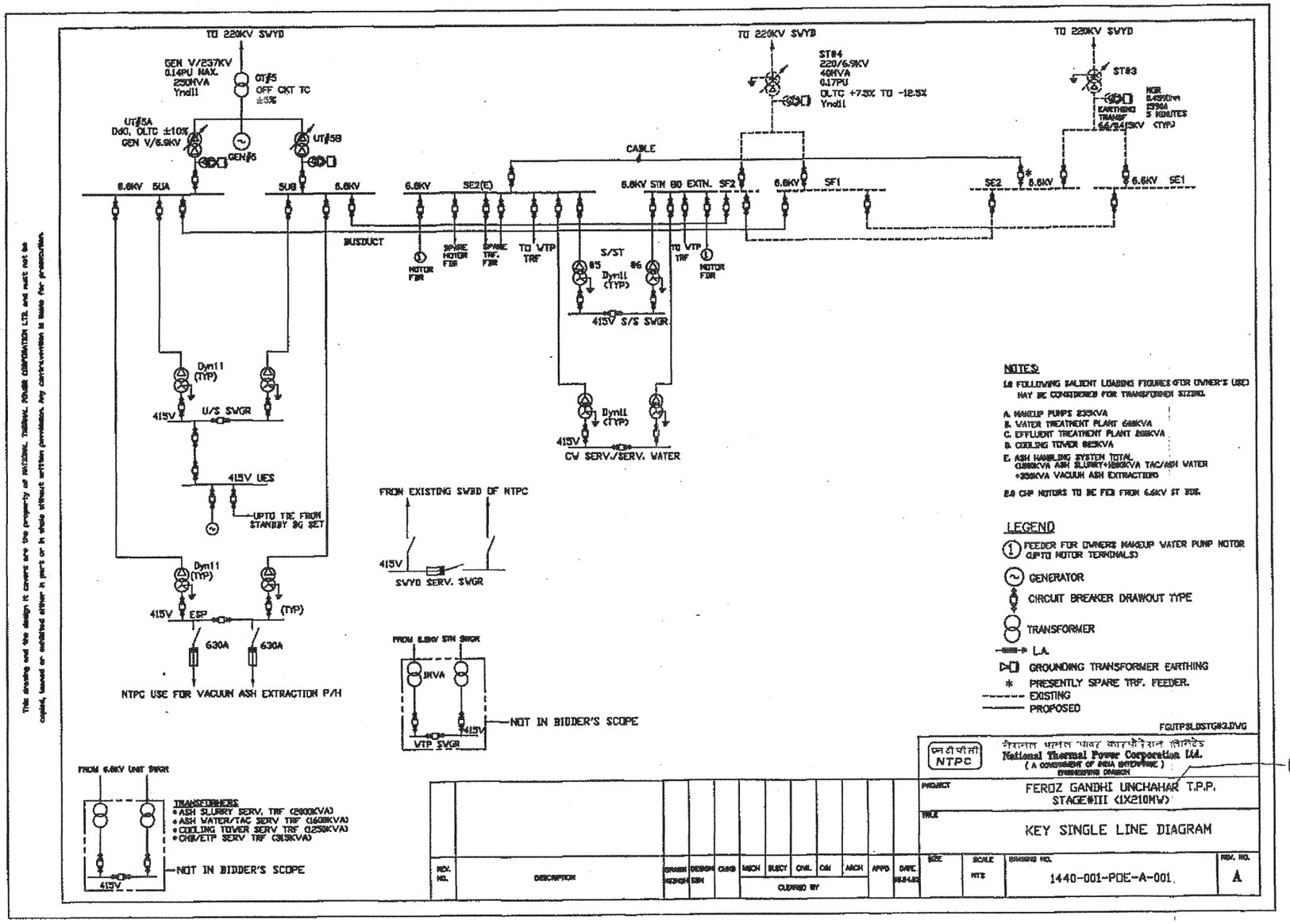

(Rs. Table 2, NO.3)

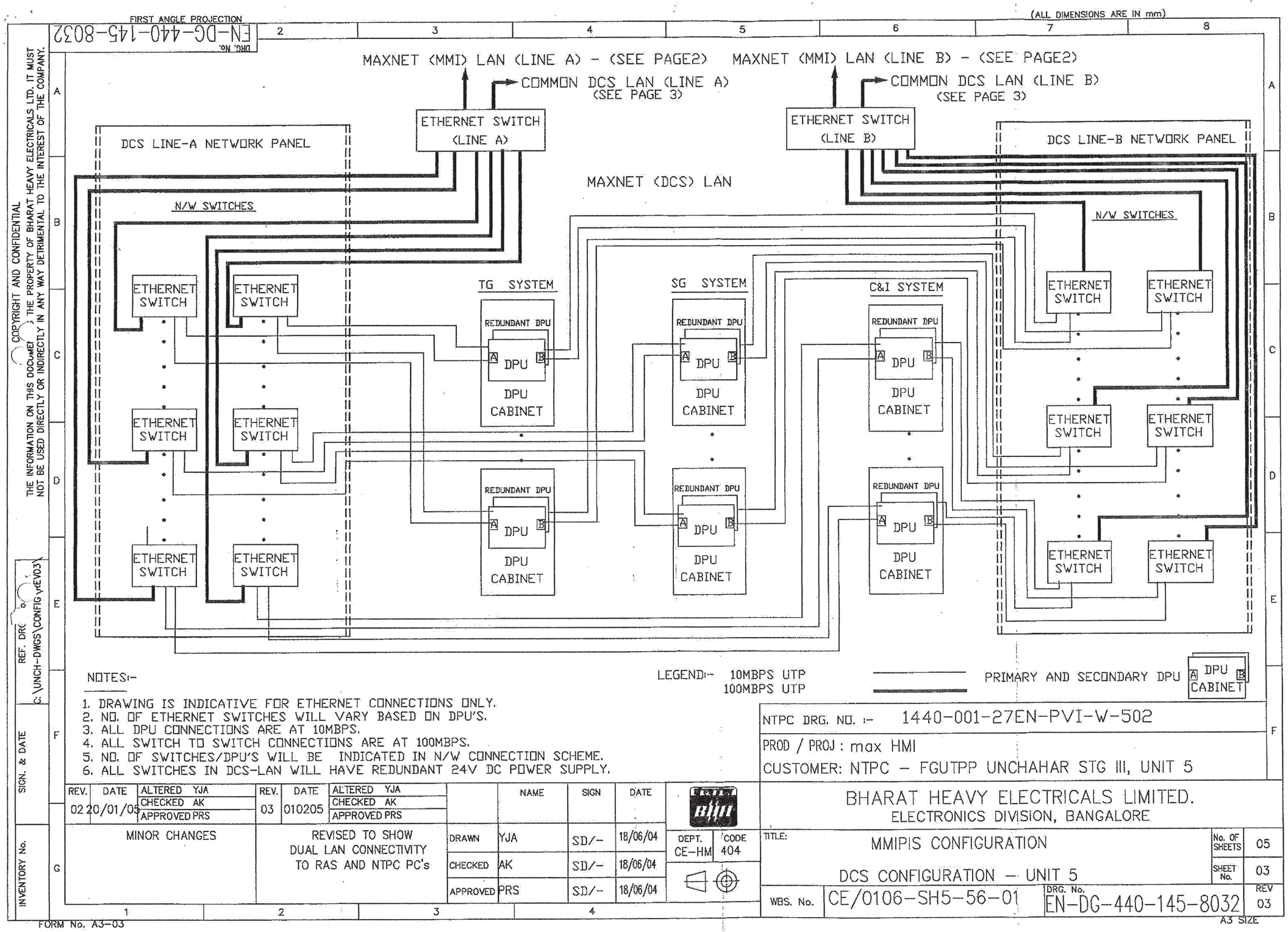
FIRST ANGLE PROJECTION
DRG. NO. EN-DG-440-145-8032
(ALL DIMENSIONS ARE IN mm)
MAXNET (MMI) LAN (LINE A) - (SEE PAGE2)
MAXNET (MMI) LAN (LINE B) - (SEE PAGE2)
COMMON DCS LAN (LINE A) (SEE PAGE 3)
COMMON DCS LAN (LINE B) (SEE PAGE 3)
ETHERNET SWITCH (LINE A)
ETHERNET SWITCH (LINE B)
DCS LINE-A NETWORK PANEL
DCS LINE-B NETWORK PANEL
MAXNET (DCS) LAN
N/W SWITCHES
ETHERNET SWITCH
TG SYSTEM
SG SYSTEM
C&I SYSTEM
REDUNDANT DPU
DPU
DPU CABINET
NOTES:-
1. DRAWING IS INDICATIVE FOR ETHERNET CONNECTIONS ONLY.
2. NO. OF ETHERNET SWITCHES WILL VARY BASED ON DPU'S.
3. ALL DPU CONNECTIONS ARE AT 10MBPS.
4. ALL SWITCH TO SWITCH CONNECTIONS ARE AT 100MBPS.
5. NO. OF SWITCHES/DPU'S WILL BE INDICATED IN N/W CONNECTION SCHEME.
6. ALL SWITCHES IN DCS-LAN WILL HAVE REDUNDANT 24V DC POWER SUPPLY.
LEGEND:- 10MBPS UTP
100MBPS UTP
PRIMARY AND SECONDARY DPU
NTPC DRG. NO. :- 1440-001-27EN-PVI-W-502
PROD / PROJ : max HMI
CUSTOMER: NTPC - FGUTPP UNCHAHAR STG III, UNIT 5
REV. 02 DATE 20/01/05 ALTERED YJA CHECKED AK APPROVED PRS
MINOR CHANGES
REV. 03 DATE 010205 ALTERED YJA CHECKED AK APPROVED PRS
REVISED TO SHOW DUAL LAN CONNECTIVITY TO RAS AND NTPC PC's
NAME SIGN DATE
DRAWN YJA SD/- 18/06/04
CHECKED AK SD/- 18/06/04
APPROVED PRS SD/- 18/06/04
DEPT. CE-HM CODE 404
BHARAT HEAVY ELECTRICALS LIMITED.
ELECTRONICS DIVISION, BANGALORE
TITLE: MMIPIS CONFIGURATION
DCS CONFIGURATION - UNIT 5
No. OF SHEETS 05
SHEET No. 03
WBS. No. CE/0106-SH5-56-01
DRG. No. EN-DG-440-145-8032
REV 03
A3 SIZE
FORM No. A3-03
COPYRIGHT AND CONFIDENTIAL
THE INFORMATION ON THIS DOCUMENT IS THE PROPERTY OF BHARAT HEAVY ELECTRICALS LTD. IT MUST NOT BE USED DIRECTLY OR INDIRECTLY IN ANY WAY DETRIMENTAL TO THE INTEREST OF THE COMPANY.
REF. DRG. C:\UNCH-DWGS\CONFIG\REV03
SIGN. & DATE
INVENTORY No.

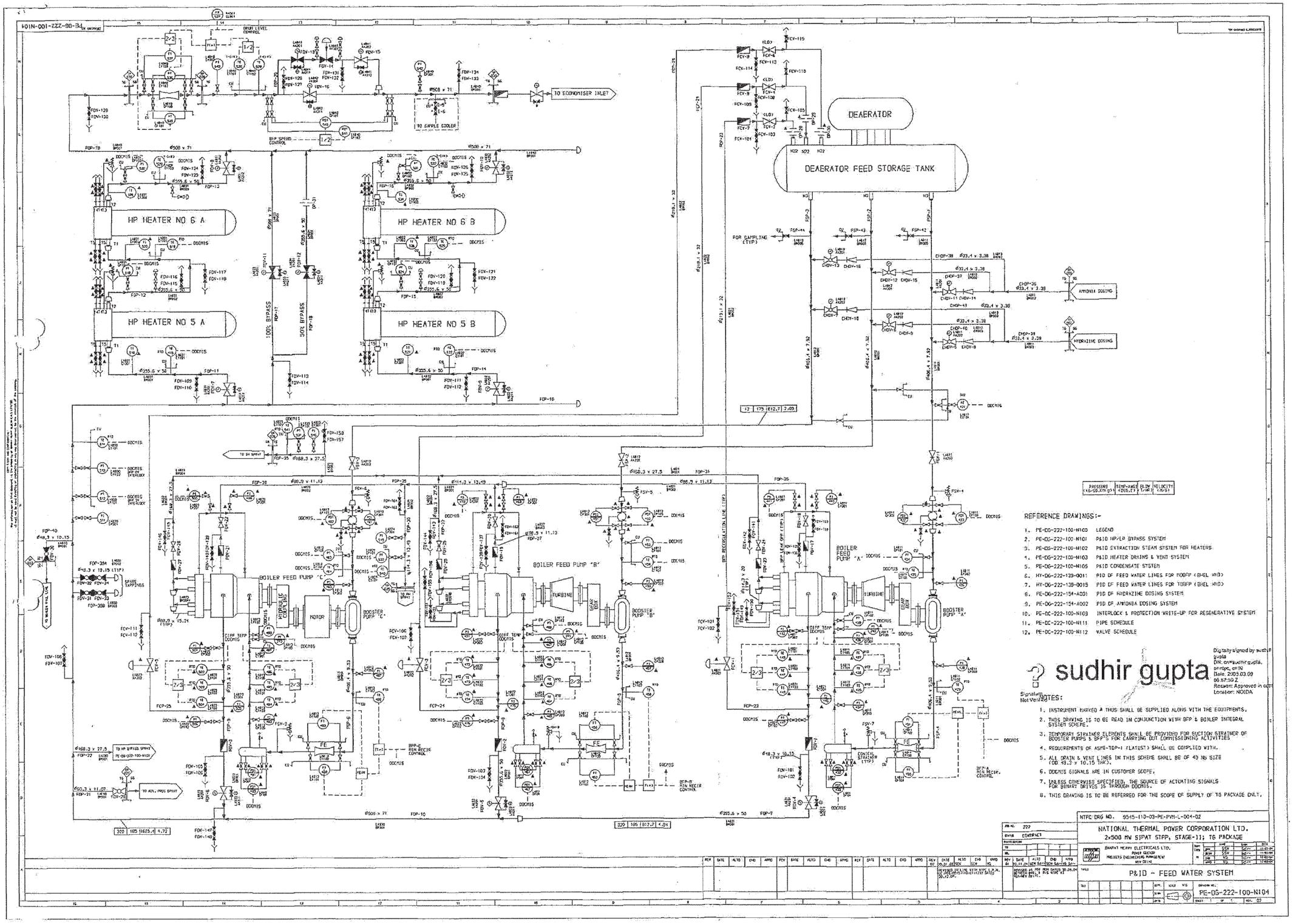
DEAERATOR
DEAERATOR FEED STORAGE TANK
HP HEATER NO 6 A
HP HEATER NO 6 B
HP HEATER NO 5 A
HP HEATER NO 5 B
100% BYPASS
50% BYPASS
TO ECONOMISER INLET
TO SAMPLE COOLER
BOILER FEED PUMP "C"
BOILER FEED PUMP "B"
BOILER FEED PUMP "A"
BOOSTER PUMP "C"
BOOSTER PUMP "B"
BOOSTER PUMP "A"
TURBINE
MOTOR
AMMONIA DOSING
HYDRAZINE DOSING
REFERENCE DRAWINGS:-
1. PE-DG-222-100-N100 LEGEND
2. PE-DG-222-100-N101 P&ID HP/LP BYPASS SYSTEM
3. PE-DG-222-100-N102 P&ID EXTRACTION STEAM SYSTEM FOR HEATERS
4. PE-DG-222-100-N103 P&ID HEATER DRAINS & VENT SYSTEM
5. PE-DG-222-100-N105 P&ID CONDENSATE SYSTEM
6. HY-DG-222-139-0011 PID OF FEED WATER LINES FOR MDBFP (BHEL MID)
7. HY-DG-222-139-0015 PID OF FEED WATER LINES FOR TDBFP (BHEL MID)
8. PE-DG-222-154-A001 PID OF HYDRAZINE DOSING SYSTEM
9. PE-DG-222-154-A002 PID OF AMMONIA DOSING SYSTEM
10. PE-DC-222-100-N103 INTERLOCK & PROTECTION WRITE-UP FOR REGENERATIVE SYSTEM
11. PE-DC-222-100-N111 PIPE SCHEDULE
12. PE-DC-222-100-N112 VALVE SCHEDULE
sudhir gupta
NOTES:
1. INSTRUMENT MARKED * THUS SHALL BE SUPPLIED ALONG WITH THE EQUIPMENTS.
2. THIS DRAWING IS TO BE READ IN CONJUNCTION WITH BFP & BOILER INTEGRAL SYSTEM SCHEME.
3. TEMPORARY STRAINER ELEMENTS SHALL BE PROVIDED FOR SUCTION STRAINER OF BOOSTER PUMPS & BFP'S FOR CARRYING OUT COMMISSIONING ACTIVITIES
4. REQUIREMENTS OF ASME-TDP-1 (LATEST) SHALL BE COMPLIED WITH.
5. ALL DRAIN & VENT LINES IN THIS SCHEME SHALL BE OF 40 NB SIZE (OD 48.3 x 10.15 THK).
6. DOCMIS SIGNALS ARE IN CUSTOMER SCOPE.
7. UNLESS OTHERWISE SPECIFIED, THE SOURCE OF ACTUATING SIGNALS FOR BINARY DEVICES IS THROUGH DOCMIS.
8. THIS DRAWING IS TO BE REFERRED FOR THE SCOPE OF SUPPLY OF TG PACKAGE ONLY.
NTPC DRG NO. 9545-110-03-PE-PVH-L-004-02
NATIONAL THERMAL POWER CORPORATION LTD.
2x500 MW SIPAT STPP, STAGE-II; TG PACKAGE
BHARAT HEAVY ELECTRICALS LTD.
POWER SECTOR
PROJECTS ENGINEERING MANAGEMENT
NEW DELHI
P&ID - FEED WATER SYSTEM
PE-DG-222-100-N104

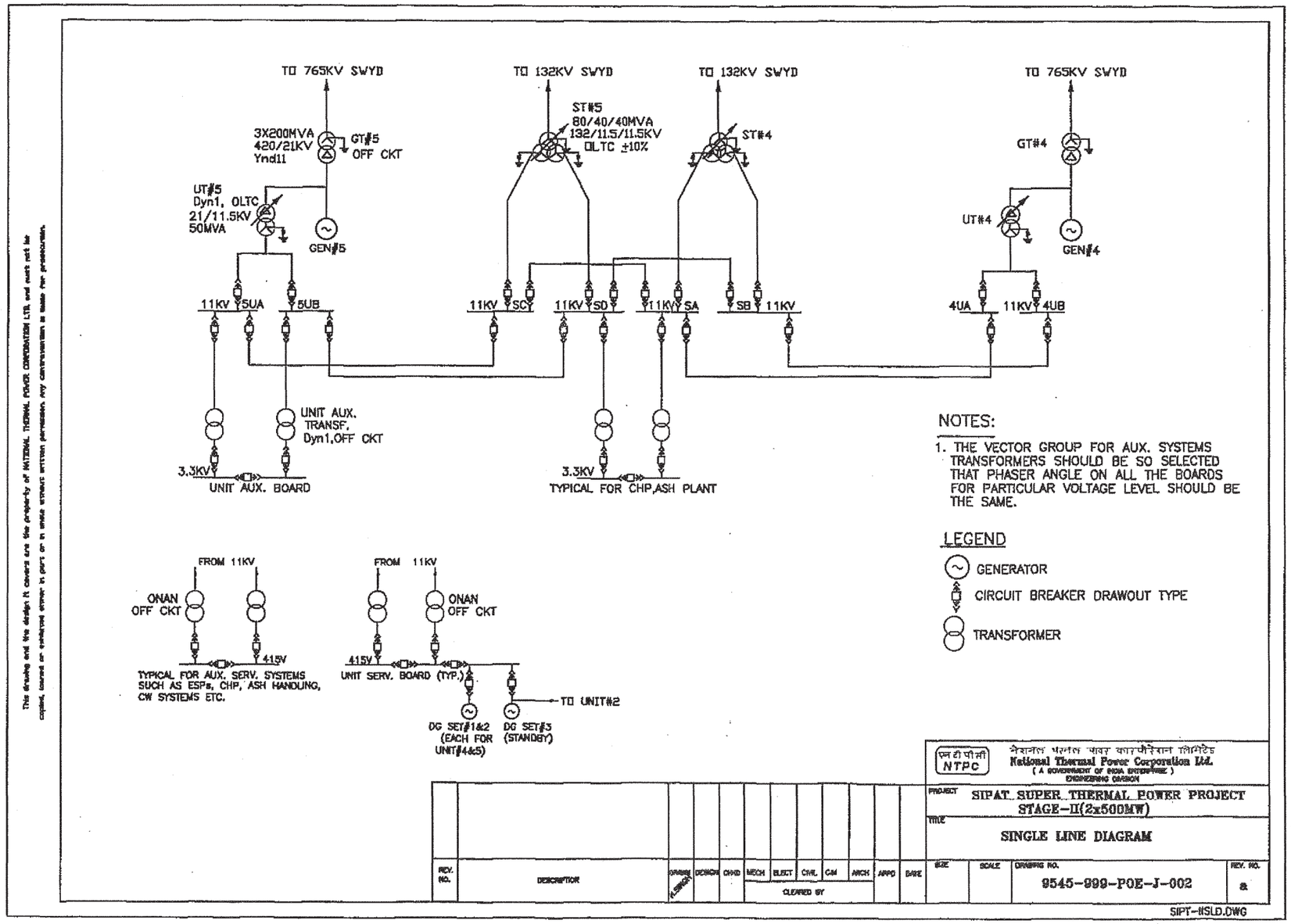
TO 765KV SWYD
TO 132KV SWYD
TO 132KV SWYD
TO 765KV SWYD
3X200MVA
420/21KV
Ynd11
GT#5
OFF CKT
ST#5
80/40/40MVA
132/11.5/11.5KV
OLTC ±10%
ST#4
GT#4
UT#5
Dyn1, OLTC
21/11.5KV
50MVA
GEN#5
UT#4
GEN#4
11KV
5UA
5UB
11KV
SC
11KV
SD
11KV
SA
SB
11KV
4UA
11KV
4UB
UNIT AUX.
TRANSF,
Dyn1,OFF CKT
3.3KV
UNIT AUX. BOARD
3.3KV
TYPICAL FOR CHP,ASH PLANT
NOTES:
1. THE VECTOR GROUP FOR AUX. SYSTEMS TRANSFORMERS SHOULD BE SO SELECTED THAT PHASER ANGLE ON ALL THE BOARDS FOR PARTICULAR VOLTAGE LEVEL SHOULD BE THE SAME.
LEGEND
GENERATOR
CIRCUIT BREAKER DRAWOUT TYPE
TRANSFORMER
FROM 11KV
ONAN
OFF CKT
415V
TYPICAL FOR AUX. SERV. SYSTEMS SUCH AS ESPs, CHP, ASH HANDLING, CW SYSTEMS ETC.
FROM 11KV
ONAN
OFF CKT
415V
UNIT SERV. BOARD (TYP.)
TO UNIT#2
DG SET#1&2
(EACH FOR
UNIT#4&5)
DG SET#3
(STANDBY)
NTPC
National Thermal Power Corporation Ltd.
ENGINEERING DIVISION
PROJECT
SIPAT SUPER THERMAL POWER PROJECT
STAGE-II(2x500MW)
TITLE
SINGLE LINE DIAGRAM
REV. NO.
DESCRIPTION
DRAWN
DESIGN
CHKD
MECH
ELECT
CIVIL
C&I
ARCH
APPD
DATE
CLEARED BY
SIZE
SCALE
DRAWING NO.
9545-999-POE-J-002
REV. NO.
2
SIPT-IISLD.DWG

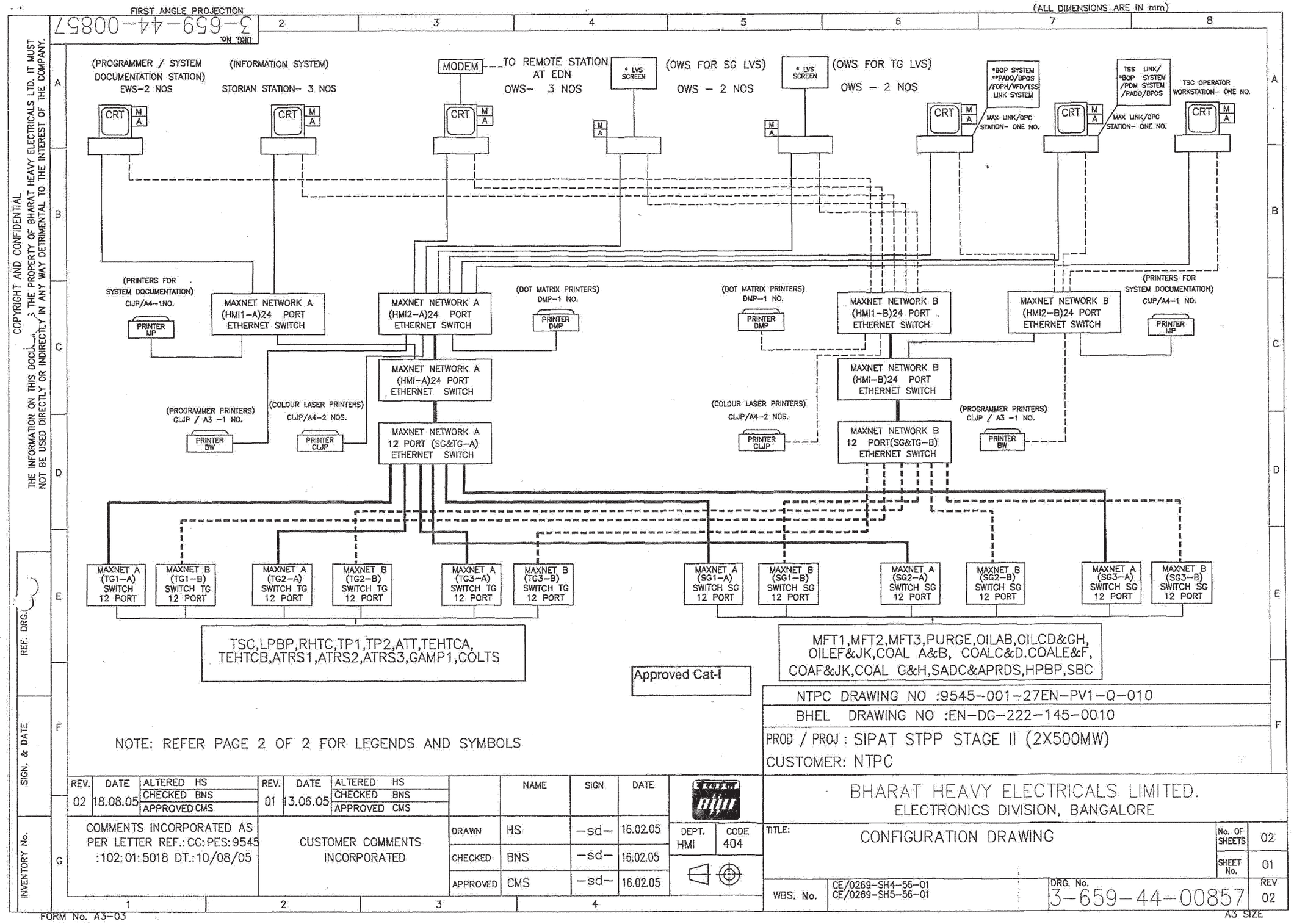
FIRST ANGLE PROJECTION
(ALL DIMENSIONS ARE IN mm)
DRG. No. 3-659-44-00857
(PROGRAMMER / SYSTEM DOCUMENTATION STATION) EWS-2 NOS
(INFORMATION SYSTEM) STORIAN STATION- 3 NOS
MODEM
TO REMOTE STATION AT EDN OWS- 3 NOS
* LVS SCREEN
(OWS FOR SG LVS) OWS - 2 NOS
* LVS SCREEN
(OWS FOR TG LVS) OWS - 2 NOS
*BOP SYSTEM **PADO/BPOS /FOPH/VFD/TSS LINK SYSTEM
MAX LINK/OPC STATION- ONE NO.
TSS LINK/ *BOP SYSTEM /PDM SYSTEM /PADO/BPOS
MAX LINK/OPC STATION- ONE NO.
TSC OPERATOR WORKSTATION- ONE NO.
CRT
M A
(PRINTERS FOR SYSTEM DOCUMENTATION) CLJP/A4-1NO.
PRINTER IJP
MAXNET NETWORK A (HMI1-A)24 PORT ETHERNET SWITCH
MAXNET NETWORK A (HMI2-A)24 PORT ETHERNET SWITCH
(DOT MATRIX PRINTERS) DMP-1 NO.
PRINTER DMP
(DOT MATRIX PRINTERS) DMP-1 NO.
PRINTER DMP
MAXNET NETWORK B (HMI1-B)24 PORT ETHERNET SWITCH
MAXNET NETWORK B (HMI2-B)24 PORT ETHERNET SWITCH
(PRINTERS FOR SYSTEM DOCUMENTATION) CLJP/A4-1 NO.
PRINTER IJP
MAXNET NETWORK A (HMI-A)24 PORT ETHERNET SWITCH
MAXNET NETWORK B (HMI-B)24 PORT ETHERNET SWITCH
(PROGRAMMER PRINTERS) CLJP / A3 -1 NO.
PRINTER BW
(COLOUR LASER PRINTERS) CLJP/A4-2 NOS.
PRINTER CLJP
MAXNET NETWORK A 12 PORT (SG&TG-A) ETHERNET SWITCH
(COLOUR LASER PRINTERS) CLJP/A4-2 NOS.
PRINTER CLJP
MAXNET NETWORK B 12 PORT(SG&TG-B) ETHERNET SWITCH
(PROGRAMMER PRINTERS) CLJP / A3 -1 NO.
PRINTER BW
MAXNET A (TG1-A) SWITCH 12 PORT
MAXNET B (TG1-B) SWITCH TG 12 PORT
MAXNET A (TG2-A) SWITCH TG 12 PORT
MAXNET B (TG2-B) SWITCH TG 12 PORT
MAXNET A (TG3-A) SWITCH TG 12 PORT
MAXNET B (TG3-B) SWITCH TG 12 PORT
MAXNET A (SG1-A) SWITCH SG 12 PORT
MAXNET B (SG1-B) SWITCH SG 12 PORT
MAXNET A (SG2-A) SWITCH SG 12 PORT
MAXNET B (SG2-B) SWITCH SG 12 PORT
MAXNET A (SG3-A) SWITCH SG 12 PORT
MAXNET B (SG3-B) SWITCH SG 12 PORT
TSC,LPBP,RHTC,TP1,TP2,ATT,TEHTCA, TEHTCB,ATRS1,ATRS2,ATRS3,GAMP1,COLTS
MFT1,MFT2,MFT3,PURGE,OILAB,OILCD&GH, OILEF&JK,COAL A&B, COALC&D.COALE&F, COAF&JK,COAL G&H,SADC&APRDS,HPBP,SBC
Approved Cat-I
NTPC DRAWING NO :9545-001-27EN-PV1-Q-010
BHEL DRAWING NO :EN-DG-222-145-0010
PROD / PROJ : SIPAT STPP STAGE II (2X500MW)
CUSTOMER: NTPC
NOTE: REFER PAGE 2 OF 2 FOR LEGENDS AND SYMBOLS
REV. 02 DATE 18.08.05 ALTERED HS CHECKED BNS APPROVED CMS
REV. 01 DATE 13.06.05 ALTERED HS CHECKED BNS APPROVED CMS
COMMENTS INCORPORATED AS PER LETTER REF.: CC: PES: 9545 :102: 01: 5018 DT.: 10/08/05
CUSTOMER COMMENTS INCORPORATED
NAME SIGN DATE
DRAWN HS -sd- 16.02.05
CHECKED BNS -sd- 16.02.05
APPROVED CMS -sd- 16.02.05
DEPT. HMI
CODE 404
BHARAT HEAVY ELECTRICALS LIMITED.
ELECTRONICS DIVISION, BANGALORE
TITLE: CONFIGURATION DRAWING
No. OF SHEETS 02
SHEET No. 01
WBS. No. CE/0269-SH4-56-01 CE/0269-SH5-56-01
DRG. No. 3-659-44-00857
REV 02
A3 SIZE
FORM No. A3-03
COPYRIGHT AND CONFIDENTIAL
THE INFORMATION ON THIS DOCUMENT IS THE PROPERTY OF BHARAT HEAVY ELECTRICALS LTD. IT MUST NOT BE USED DIRECTLY OR INDIRECTLY IN ANY WAY DETRIMENTAL TO THE INTEREST OF THE COMPANY.
REF. DRG.
SIGN. & DATE
INVENTORY No.

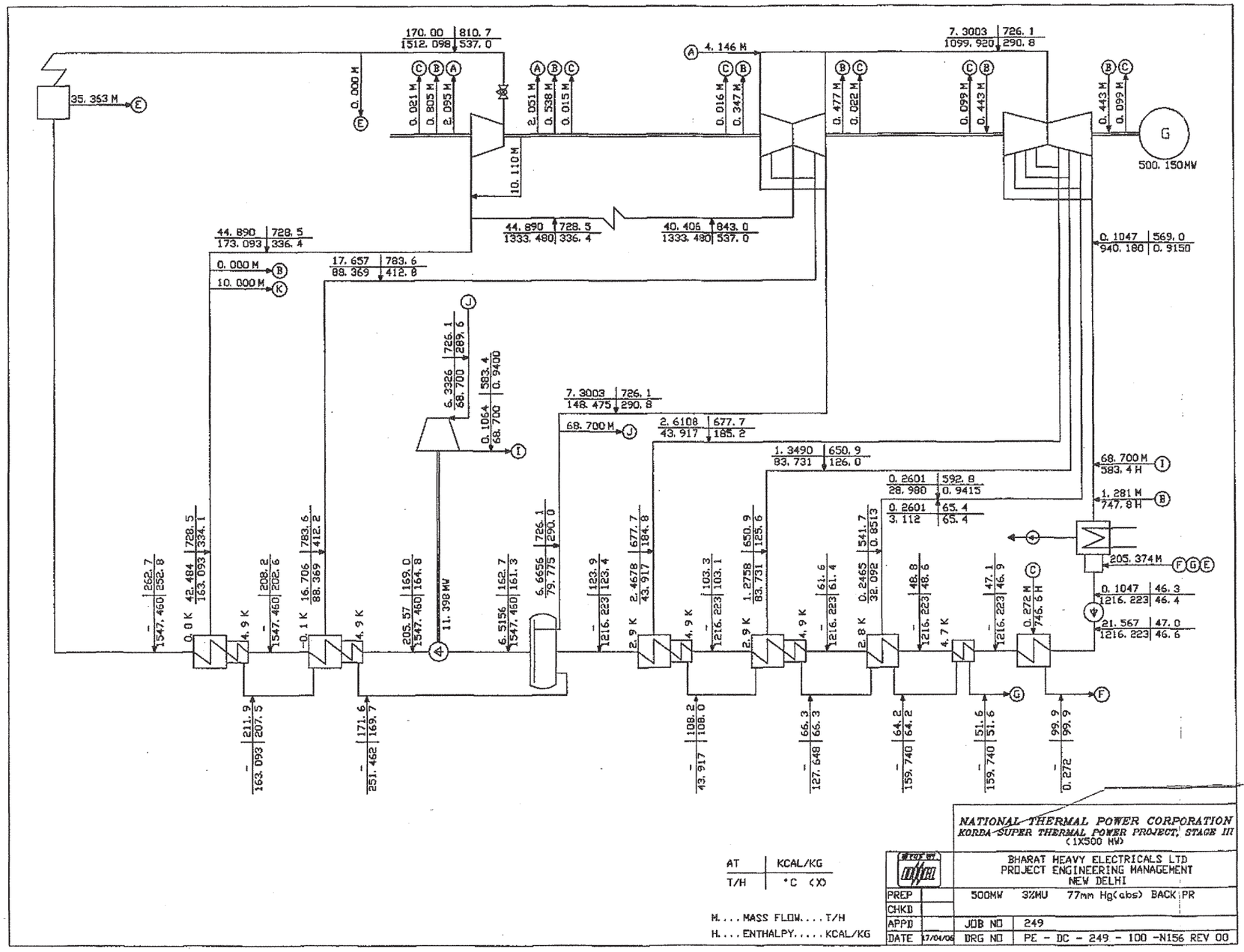

(Ref, Table 2. No,11)

4－4 DADRI POWER STATION Operation Record of Power Plant

Name of Power Plant Dadri 210MW							
No	Item	unit	Unit 1	Unit 2	Unit 3	Unit 4	Unit 5
1	Unit capacity	MW	210				
2	Commence of operation						
3	Boiler manufacturer		BHEL				
4	Boiler type		CE				
5	Type of Fuel		Coal				
6	Low Calorific value of fuel	kcal/kg	3500				
7	FDF inlet air temperature	℃	27				
8	Flue gas temperature	℃	136				
9							
10	Turbine manufacturer		BHEL				
11	Turbine type		KWU				
12	Turbine capacity		210				
13	Rated main steam pressure	ata	150				
14	Rated main steam temperature	℃	537				
15	Rated reheat steam pressure	ata	37.2				
16	Rated reheat steam temperature	℃	537				
17	Feed water temperature	℃	247				
18	Condenser vacuum	mmHg	76				
19	Condenser cooling type		NDCT				
20							
21	Generator manufacturer		BHEL				
22	Generator type		THW-200-2				
23	Generator capacity	MVA	247				
24	Generator voltage	kV	16.5				
25	Power factor		0.85				
26							
27	Plant efficiency	%					
28	Heat Rate	kcal/kWh					
29							
30							

4－5　DADRI POWER STATION Plant Reliability & Availability(Coal station)

Name of power station:	Dadri(Coal) (4X210 MW)

No.	Item	Unit	2003	2004	2005	2006	2007
1	Total operartion hour/No of yrs..	No. of yrs. of operation					13
2	Planned outage	Hrs.					
3	No of planned outage	Nos.	4	3	4	3	2
3(a)	Planned outage	%	5.02	3.55	6.02	4.19	3.22
4	Unplanned outage	Hrs					
5	No. of unplanned outage	Nos.	24	21	28	10	3
5(a)	Unplanned outage	%	1.97	0.62	0.51	0.29	0.26
6	Boiler Unplanned outage	Hrs					
7	No. of Boiler Unplanned outage	Nos.	3	4	6	3	4
8	Turbine Unplanned outage	Hrs.					
9	No. of Turbine Unplanned outage	Nos.	4	0	1	4	0
10	Availability	%	92.52	95.77	93.31	95.38	96.47
11	Total Power generation(Gross)	MU/Year	6181.1	6831.2	6768.1	7041.3	7232.4
12	Total Generation (Net)	MU/Year					
13	Max Power Generation	MW					
14	Mean power generation	MW					
15	Load factor	%	83.77	92.84	91.98	95.69	98.02
16	Fuel Consumption						
17	Station load	MW					
18	Station load ratio						
19							
20	Volume of flue gas						
21	Volume of C02						
22							
23	No. of unit start/stop (Total)	Nos	28	24	32	13	5
24	No of unit start/stop (Cold)	Nos.					
25	No of unit start/stop (Warm)	Nos.					
26	No of unit start/stop (Hot)	Nos.					
27 / 28							
29	List of Unplanned shutdown						
30	List of main troubles						
31	List of Main repair works						
32							
33	Dialy & seasonal load profile		Base load	Base load	Base load	Base load	Base load

Name of Power Plant & Unit No. (Dadri 210 MW) (No. 5)

(Table 4 の記載)

No	Item	unit	100% or near	~~Low load~~	Design Data
1	Load (MW) : generator end	MW	218.0		210
2	Load (MW) : transmission end	MW			
3	Plant efficiency	%			
4	Heat Rate	kcal/kWh			
5	Boiler efficiency	%			
6					
7	Fuel flow				
8	Air flow		743.0		
9	Air temperature (Air heater inlet)	℃	31.7		27
10	Air temperature (Air heater outlet)	℃	288.7		
11	Flue gas temperature (Air heater inlet)	℃	344.9		
12	Flue gas temperature (Air heater outlet)		139.0		136
13	Flue gas O_2 (Air heater inlet)	%	3.6		
14	Flue gas O_2 (Air heater outlet)		6.6		
15	Flue gas CO_2		15.5		
16					
17	Main steam flow	T/h	657.6		
18	Main steam pressure	kg/cm^2	150.8		150
19	Main steam temperature	℃	536.7		537
20	Reheat steam pressure	kg/cm^2	36.3		37.2
21	Reheat steam temperature	℃	536.6		537
22	Reheater inlet steam pressure	kg/cm2	38.0		
23	Reheater inlet steam temperature	℃	349.0		
24	Reheater spray flow	T/h	4.0		
25					
26	Feed water flow	T/h	671.8		
27	Feed water temperature (boiler inlet)	℃	244.7		247
28	Feed water pressure	kg/cm^2	171.0		
29					
30	Condenser vacuum	mmHg	64.0		76
31	Condenser cooling water temperature (in)		26.0		
32	Condenser cooling water temperature (out)		38.8		
33					
34	Generator voltage	kV	16.8		16.5
35	Power factor		0.99		0.85

日取文関心事のデータ

4－7 DADRI POWER STATION Environmental Requirements of Power Plant

No	Item	Singrauli	Talcher Th	Tanda	Badarpur	Dadri	Limits by Law & Regulation
1							
2							
3	Boiler flue gas						
4	Sox						
5	Nox						
6	Solid particles	84-138	112-118	121-141	86-141	79-112	150 mg/nm3
7							
8	Waste water						
9	pH	7.6-7.8	7.9-8.2	8-8.3	7.1-7.2	7.3-8.7	6.5-8.5
10	SS	50-58	47-88	31-91	96-106	24-90	100 ppm
11	COD	154-182	118-140	20-33	104-124	56-90	250 mg/litre
12	Oil	1-1.2	ND	3.2-4.3	1.8-2.6	4.0-9	20 mg/litre
13							
14							
15							

SS: Suspended Solid

COD: Chemical Oxygen Demand

ND: Not Detectable

４－８　主たる修理項目（定型業務）

Major repair works normally done: （NTPC 発電設備 全般を対象としている）

Boiler area

1. Boiler / furnace cleaning with high pressure water jet
2. Replacement of boiler tubes / panels
3. Replacement of coal burners / nozzles and coal orifices
4. Repair / overhaul of burner tilt mechanism
5. Repair / overhaul of secondary air dampers and controls
6. Repair / replacement of boiler insulation
7. Repair / overhaul of safety valves
8. Repair / replacement of reheater and superheater spray control and isolating valves
9. Repair of boiler casing to arrest air ingress
10. Repair of boiler pent house seals
11. Repair / replacements of expansion joints in air and flue gas ducts
12 Repair of flue gas ducts
13. Air heater cleaning with fire water and high pressure jets
14. Replacement of air heater seals
15. Replacement of air heater baskets
16. Cleaning of flue gas and air ducts
17. Overhaul of PA, FD, ID & Seal air fans and motors
18. Overhaul of flue gas side gates and dampers
19. Overhaul of mills (replacement of grinding rolls, bull ring segments, repair of classifiers, mill gear boxes and other components of mills)
20. Repair / overhaul of gravimetric / volumetric feeders
21. Repair / replacement of coal pipe lines and bends
22. Inspection of critical pipings, hangers and supports and necessary corrections
23. Repair / replacement of boiler and ducts insulations
24. Repair of ESP passes / fields (emitting electrodes, collecting plates, hoppers etc, evacuation systems etc)
25. Repair of bottom ash hoppers, clinkering grinders and bottom ash evacuation system)
26. Repair of ash slurry pipelines
27. Repair / overhaul of ash slurry pumps
28.

Turbine and Auxiliaries Area

1. Condenser tube cleaning with high pressure jets and / or water powered scrappers
2. Replacement of condenser tubes
3. Repair / replacement of high pressure and low pressure valves
4. Repairs in HP heaters, if required (partition plate passing)
5. Overhaul of MS / RH stop and control valves
6. Overhaul of extraction valves, NRV etc
7. Overhaul of governing system
8. Cleaning of main oil tank, coolers, BFP oil system cooler, vacuum pump coolers etc
9. Repair of steam ejectors
10 Overhaul of BFP, CEP, vacuum pumps etc if required
11. Cleaning of MS and HRH strainers
12. Overhaul of main turbine (bearings, diaphragms, gland seals, inter-stage seals repair / replacements, blades repair / replacement etc)
13. Overhaul of generator and auxiliaries
14. Replacement of high energy drain valves
15. Repair / replacement of extraction lines bellows
16. Repair / replacement of insulations
17. Deaerator cleaning

Balance of Plants / Offsite

1. Overhaul of CW pumps
2. Cleaning of CW ducts
3. Painting of CW ducts
4. Overhaul of CW system valves
5. Cleaning of CT basin
6. Cleaning of CT fills
7. Repair / replacement of CT fills
8. Repair / replacement of CT nozzles
9. Repair / overhaul of CT fans
10. Repair / overhaul of raw water pumps
11. Repair / overhaul of fire water pumps
12. Overhaul / repair of instrument air compressors, plant air compressors, transport air compressors
13. Overhaul of plant air conditioning system (overhaul of compressors, heat exchangers, AHUs etc)
14.

4－9 KORBA火力発電所における計画外停止の要約

(RS, Table 2, NO.11)

BRIEF DETAILS OF TRIPS: KORBA 2006-07

NOTE: Trips given in Italics had occurred within 3 months of Overhaul completion date.

SL. NO	UNIT	TRIP DATE	DURATION	ROOT CAUSE	CODE	% AVAIL. LOSS
1	1	30-Apr-06	24:19	Loss of Excitation. Auto/Manual switch was operated by mistake for controlling excitation instead of raise/lower buttons. Change over to manual could not be detected due to fused indication and non availability of Auto to Manual alarm in facia..	ELEC	0.002
2	5	26-Jun-06	5:11	Fault of Ash Slurry pump 5A motor extended up to incomer to UAT 5B and 6.6KV bus B tripped and unit tripped on flame failure.	ELEC	0.014
3	5	11-Jul-06	3:31	FSSS 220 V DC supply MCB tripped due to short circuiting of HOTV solenoid. Unit tripped on FSSS 220 V DC supply failure.	C&I	0.010
4	2	*15-Aug-06*	*2:43*	*BFP-C tripped on suction pressure low and BFP-A tripped on bearing temp high after 8 minutes. Unit tripped as both BFPs tripped.*	*TG*	*0.003*
5	2	25-Nov-06	26:01	Unit tripped on GT Buchholz 1st stage protection due to air ingress through vent plug gasket of radiator-02 of cooler bank-02 from radiator leakage.	ELEC	0.028
6	6	27-Dec-06	7:40	Unit tripped on flame failure due to PA Fan-B blade pitch hunting.	OTHERS	0.021

BRIEF DETAILS OF TRIPS: KORBA 2006-07

NOTE Trips given in Italics had occurred within 3 months of Overhaul completion date.

SL. NO	UNIT	TRIP DATE	DURATION	ROOT CAUSE	CODE	% AVAIL. LOSS
8	6	15-Feb-07	9 33	Unit tripped on GENERATOR STATOR E/F due to metallic binding strip getting loose and falling down	ELEC	0.026
7	3	19-Feb-07	6:20	Analog Control System supply failure. One wire of 110 VAC circuit got disconnected from back plane of lamp driver card's Maxitermi pin and touched the adjacent Maxitermi connected pin, which carries 15 VDC. This caused FSSS unit panel 15V supply voltage fluctuations	C&I	0.007
9	6	30-Mar-07	1 33	Generator Class-A protection got actuated due to operation of Generator Stator Standby E/F relay due to blowing of B-phase PT HT fuse	ELEC	0 004

57

4－10　組織図

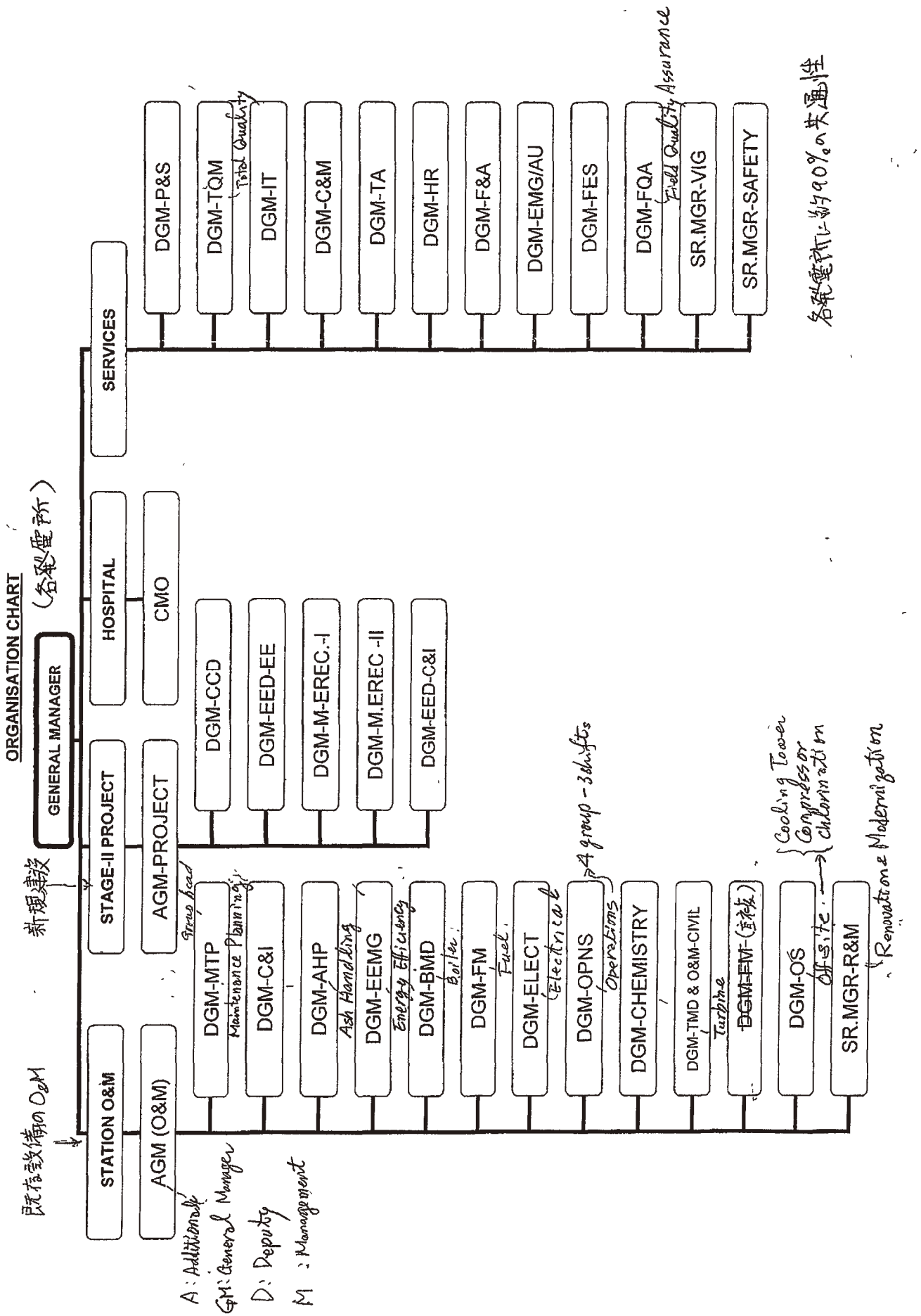
ORGANISATION CHART
GENERAL MANAGER
（各発電所）
既存設備のO&M
新規建設
STATION O&M
STAGE-II PROJECT
HOSPITAL
SERVICES
AGM (O&M)
AGM-PROJECT
CMO
DGM-MTP
DGM-C&I
DGM-AHP
DGM-EEMG
DGM-BMD
DGM-FM
DGM-ELECT
DGM-OPNS
DGM-CHEMISTRY
DGM-TMD & O&M-CIVIL
DGM-EM-(主機)
DGM-OS
SR.MGR-R&M
DGM-CCD
DGM-EED-EE
DGM-M-EREC.-I
DGM-M.EREC -II
DGM-EED-C&I
DGM-P&S
DGM-TQM
DGM-IT
DGM-C&M
DGM-TA
DGM-HR
DGM-F&A
DGM-EMG/AU
DGM-FES
DGM-FQA
SR.MGR-VIG
SR.MGR-SAFETY
Group head
Maintenance Planning
Ash Handling
Energy Efficiency
Boiler
Fuel
Electrical
4 group - 3 shifts
Operations
Turbine
Cooling Tower
Compressor
Chlorination
Off-site
Renovation & Modernization
Total Quality
Field Quality Assurance
各発電所に約90%の共通性
A : Additional
GM : General Manager
D : Deputy
M : Management