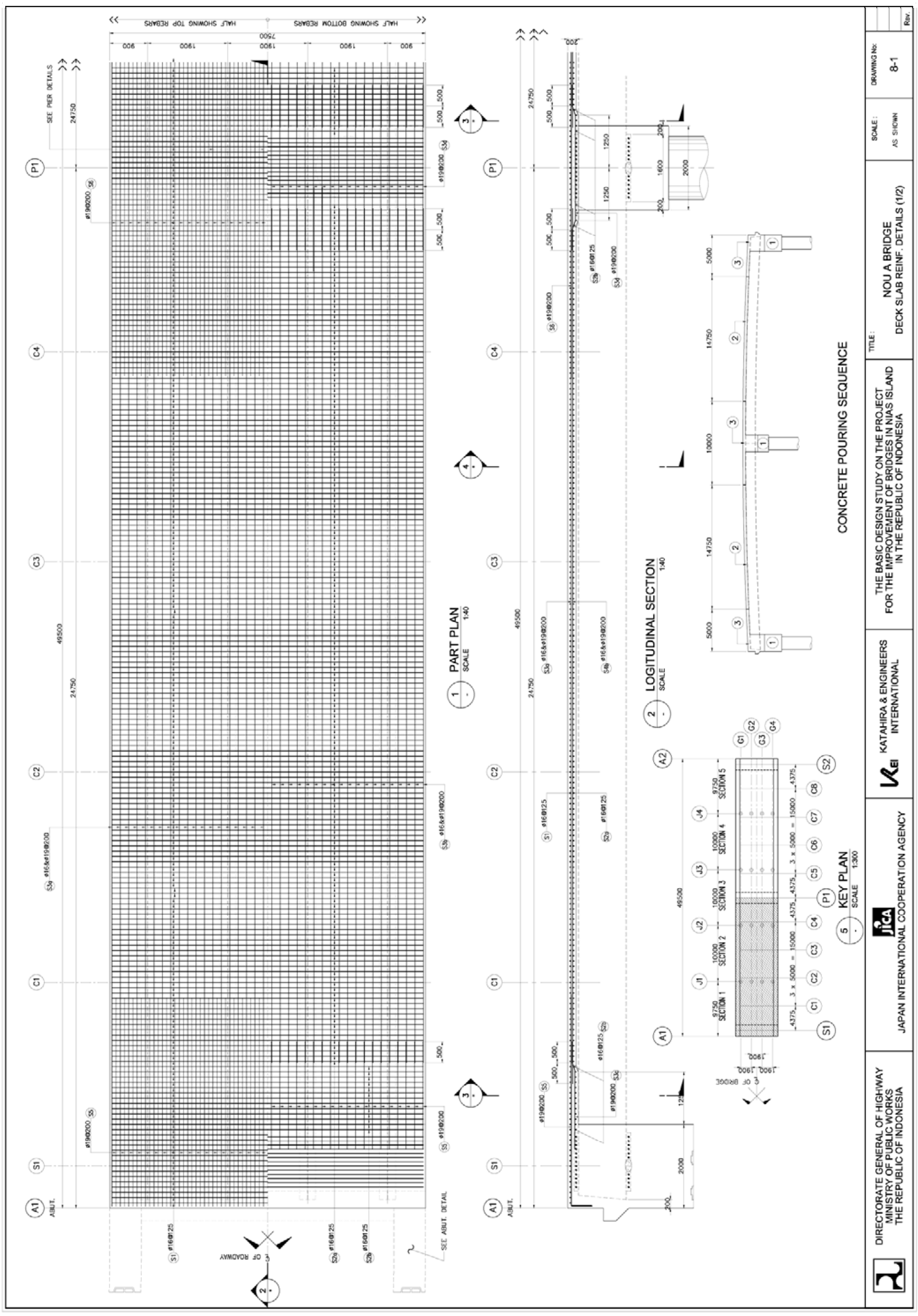
PART PLAN
1 SCALE 1:40
LOGITUDINAL SECTION
2 SCALE 1:40
KEY PLAN
5 SCALE 1:300
CONCRETE POURING SEQUENCE
HALF SHOWING TOP REBARS
HALF SHOWING BOTTOM REBARS
SEE PIER DETAILS
SEE ABUT. DETAIL
ABUT.
℄ OF ROADWAY
℄ OF BRIDGE
49500
24750
7500
14750
10000
5000
SECTION 1
SECTION 2
SECTION 3
SECTION 4
SECTION 5
DIRECTORATE GENERAL OF HIGHWAY
MINISTRY OF PUBLIC WORKS
THE REPUBLIC OF INDONESIA
JAPAN INTERNATIONAL COOPERATION AGENCY
KATAHIRA & ENGINEERS INTERNATIONAL
THE BASIC DESIGN STUDY ON THE PROJECT
FOR THE IMPROVEMENT OF BRIDGES IN NIAS ISLAND
IN THE REPUBLIC OF INDONESIA
TITLE :
NOU A BRIDGE
DECK SLAB REINF. DETAILS (1/2)
SCALE :
AS SHOWN
DRAWING No:
8-1
Rev.

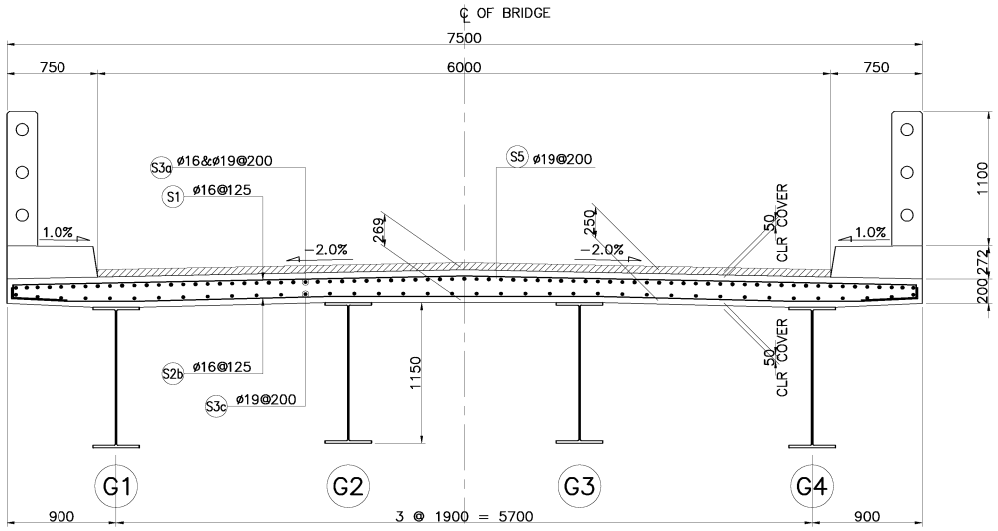

3 - SECTION
SCALE 1:30

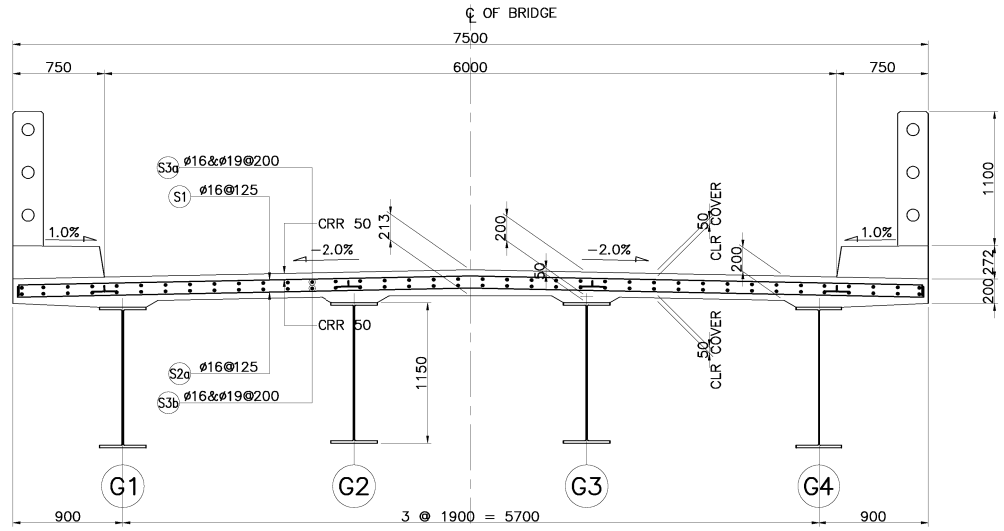

4 - SECTION
SCALE 1:30

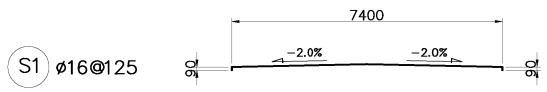

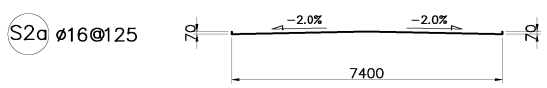

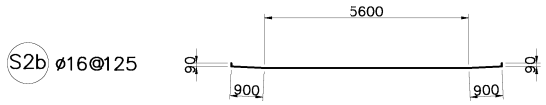

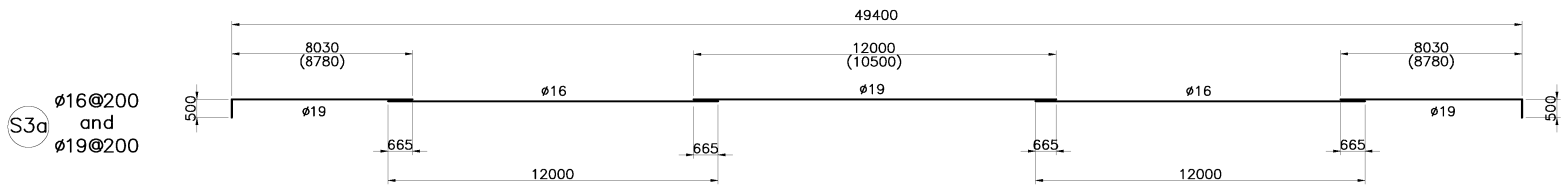

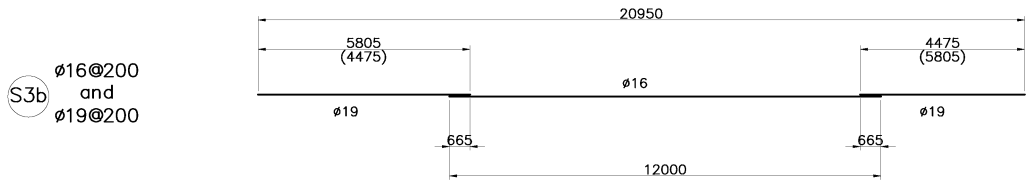

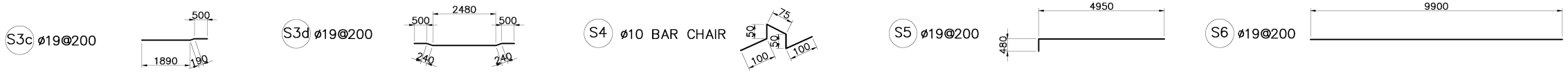

SCHEDULE OF REINFORCEMENT

BARK MARK	BAR SIZE	LENGTH PER BAR	QTY.	UNIT WT.	WT. PER BAR	TOTAL WT.
S1	D−16	7.580	397	1.578	11.96	4748.12
S2a	D−16	7.540	322	1.578	11.90	3831.80
S2b	D−16	7.580	36	1.578	11.96	430.56
S3	D−16	24.000	38	1.578	37.87	1439.06
	D−19	29.060	38	2.226	64.69	2458.22
S4	D−16	12.000	76	1.578	18.94	1439.44
	D−19	10.280	76	2.226	22.88	1738.88
S5	D−16	2.580	76	1.578	4.07	309.32
S6	D−16	3.960	38	1.578	6.25	237.50
S7	D−10	0.375ave.	80	0.617	0.23	18.40
S8	D−19	5.430	74	2.226	12.09	894.66
S9	D−19	9.900	37	2.226	22.04	815.48
					SD−40 TOTAL =	18,361.44Kgs.

DIRECTORATE GENERAL OF HIGHWAY MINISTRY OF PUBLIC WORKS THE REPUBLIC OF INDONESIA	JICA JAPAN INTERNATIONAL COOPERATION AGENCY	KEI KATAHIRA & ENGINEERS INTERNATIONAL	THE BASIC DESIGN STUDY ON THE PROJECT FOR THE IMPROVEMENT OF BRIDGES IN NIAS ISLAND IN THE REPUBLIC OF INDONESIA	TITLE : NOU A BRIDGE DECK SLAB REINF. DETAILS (2/2)	SCALE : AS SHOWN	DRAWING No: 8-2 Rev.

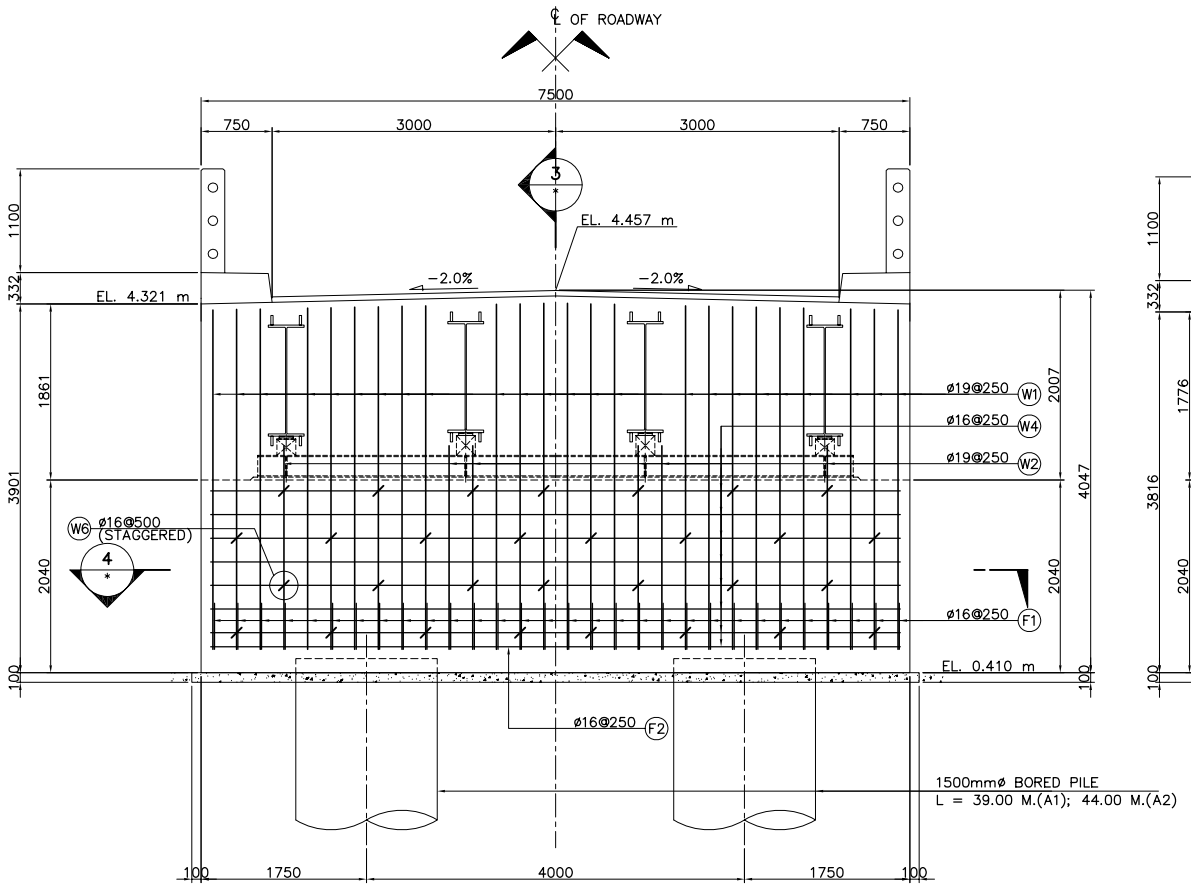

1 SECTION
SCALE 1:40

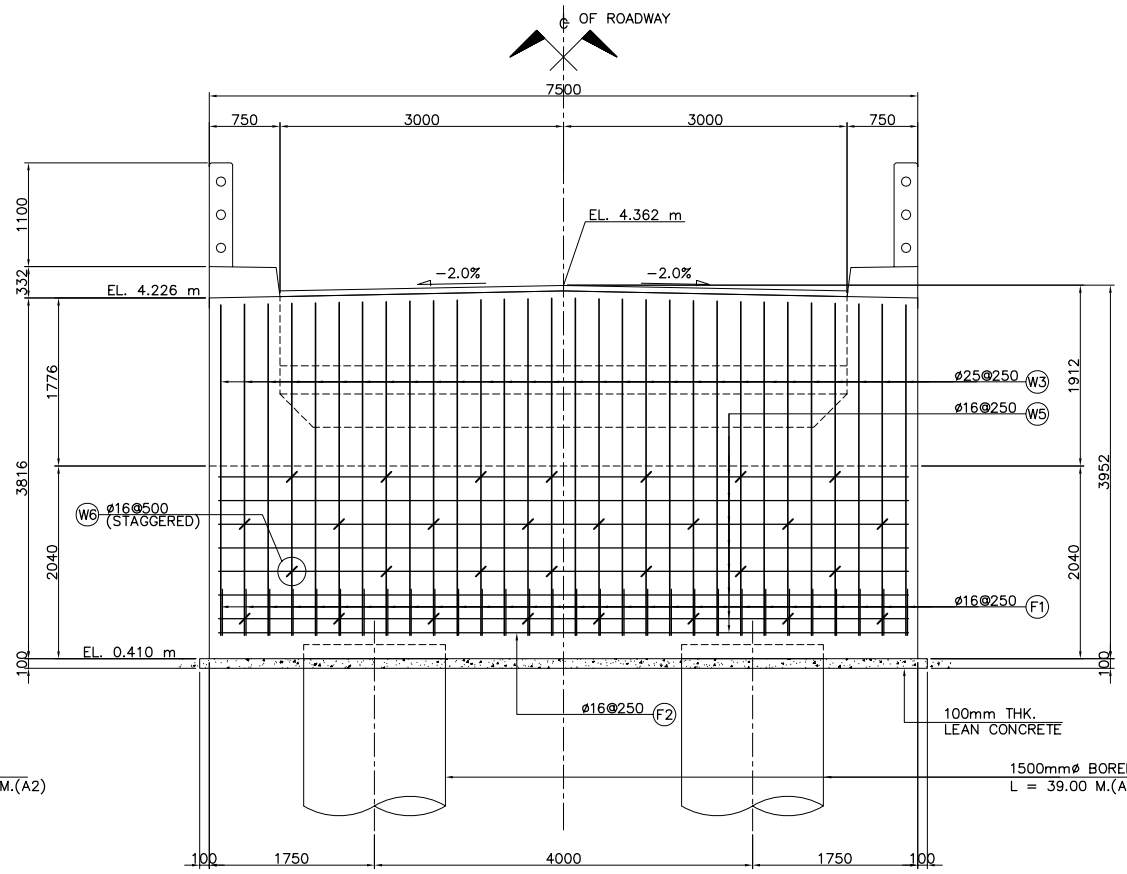

2 SECTION
SCALE 1:40

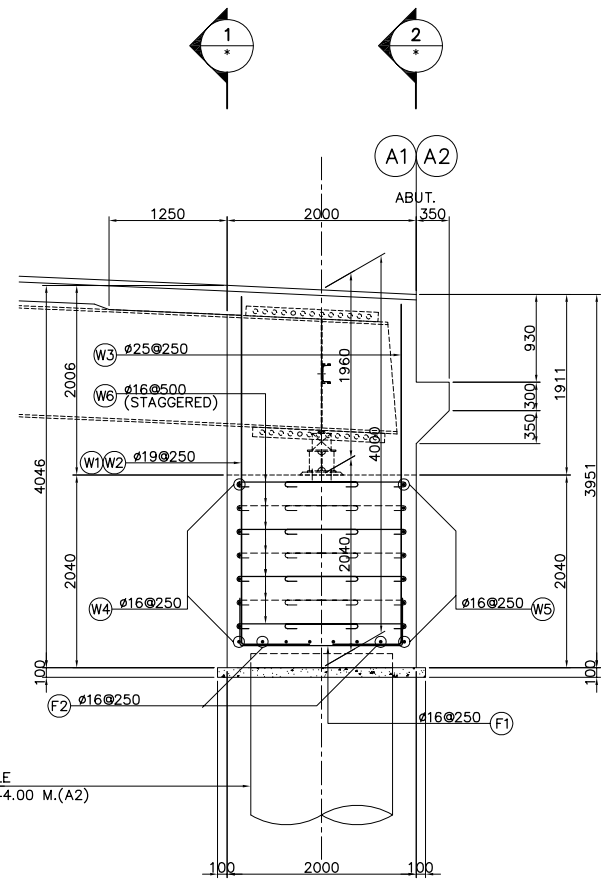

3 SECTION
SCALE 1:40

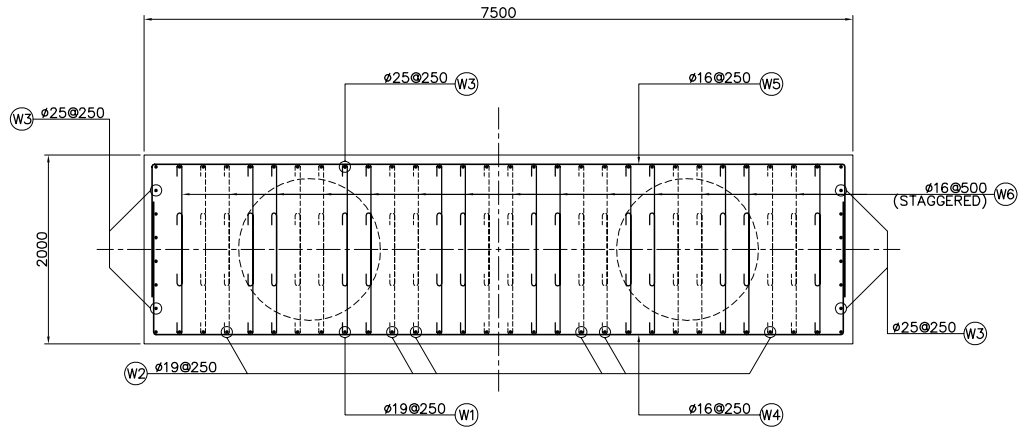

4 SECTION
SCALE 1:40

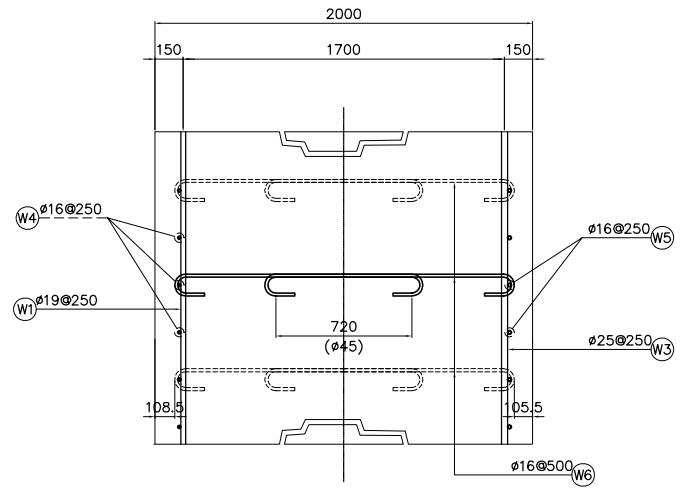

5 DETAIL
SCALE 1:20

DIRECTORATE GENERAL OF HIGHWAY MINISTRY OF PUBLIC WORKS THE REPUBLIC OF INDONESIA	JICA JAPAN INTERNATIONAL COOPERATION AGENCY	KATAHIRA & ENGINEERS INTERNATIONAL	THE BASIC DESIGN STUDY ON THE PROJECT FOR THE IMPROVEMENT OF BRIDGES IN NIAS ISLAND IN THE REPUBLIC OF INDONESIA	TITLE : NOU A BRIDGE ABUT. A1 & A2 REINF. DETAILS (1 of 4)	SCALE : AS SHOWN	DRAWING No: 8-3 Rev.

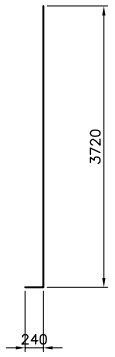

W1 48–ø19 x 3960

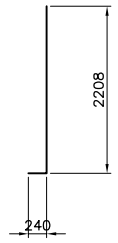

W2 12–ø19 x 2448

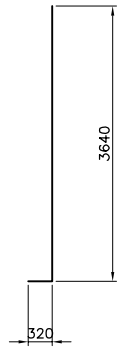

W3 84–ø25 x 3960

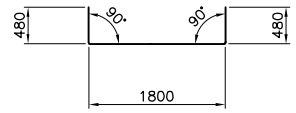

F1 60–ø16 x 2760

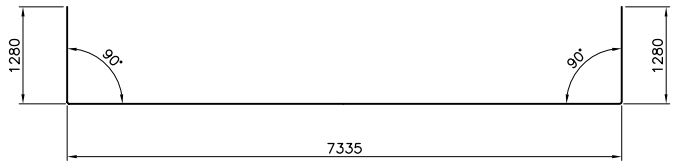

W4 16–ø16 x 9895

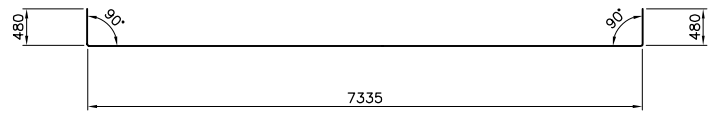

F2 12–ø16 x 8295

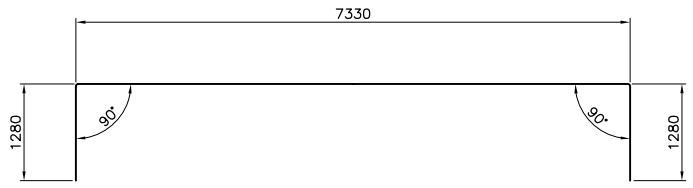

W5 16–ø16 x 9890

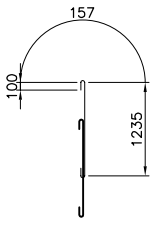

W6 60–ø16 x 3498

SCHEDULE OF REINFORCEMENT

BARK MARK	BAR SIZE	LENGTH PER BAR	QTY.	UNIT WT.	WT. PER BAR	TOTAL WT.
W1	D–19	3.96	48	2.226	8.815	423.12
W2	D–19	2.448	12	2.226	5.449	65.39
W3	D–25	3.96	84	3.853	15.258	1281.67
W4	D–16	9.895	16	1.578	15.614	249.82
W5	D–16	9.89	16	1.578	15.606	249.7
W6	D–16	3.498	60	1.578	5.52	331.2
F1	D–16	2.76	60	1.578	4.355	261.3
F2	D–16	8.295	12	1.578	13.09	157.09
					SD–40 TOTAL =	3019.28 Kgs.

DIRECTORATE GENERAL OF HIGHWAY MINISTRY OF PUBLIC WORKS THE REPUBLIC OF INDONESIA	JICA JAPAN INTERNATIONAL COOPERATION AGENCY	KATAHIRA & ENGINEERS INTERNATIONAL	THE BASIC DESIGN STUDY ON THE PROJECT FOR THE IMPROVEMENT OF BRIDGES IN NIAS ISLAND IN THE REPUBLIC OF INDONESIA	TITLE : NOU A BRIDGE ABUT. A1 & A2 REINF. DETAILS (2 of 4)	SCALE : AS SHOWN	DRAWING No: 8-4 Rev.

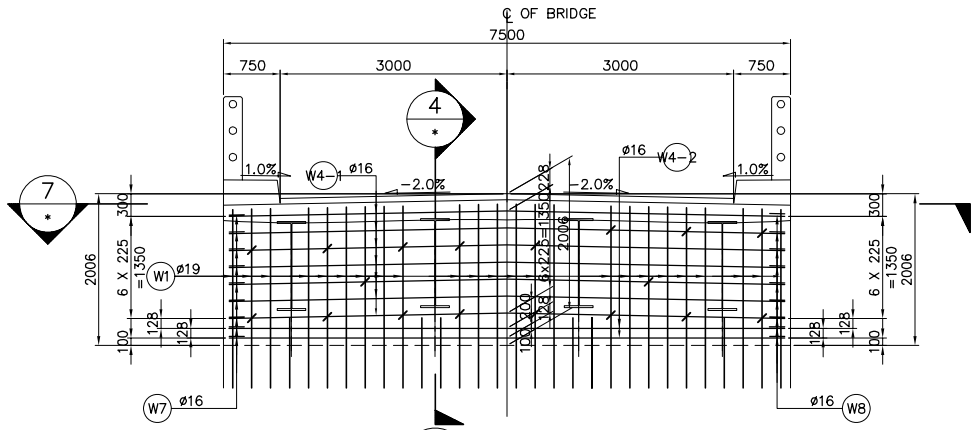

1 - SECTION
SCALE 1:50

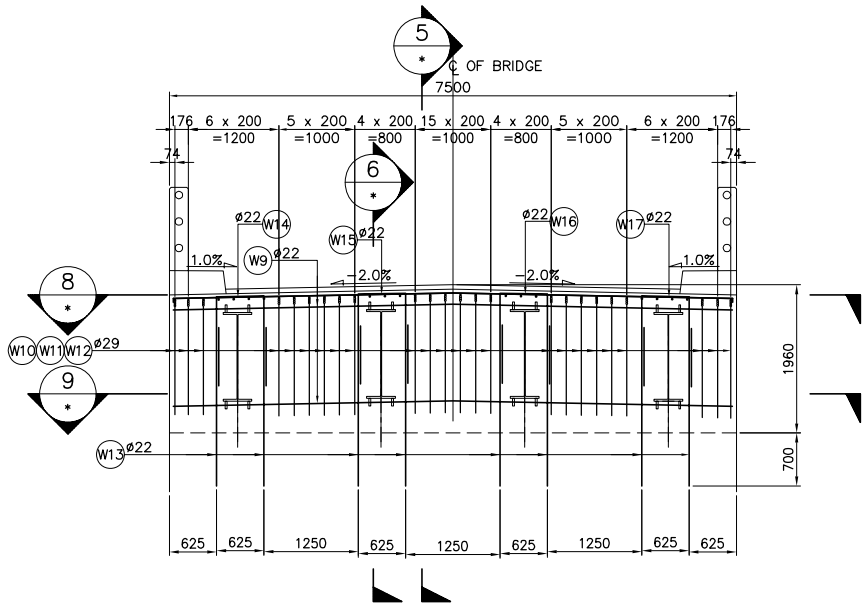

2 - SECTION
SCALE 1:50

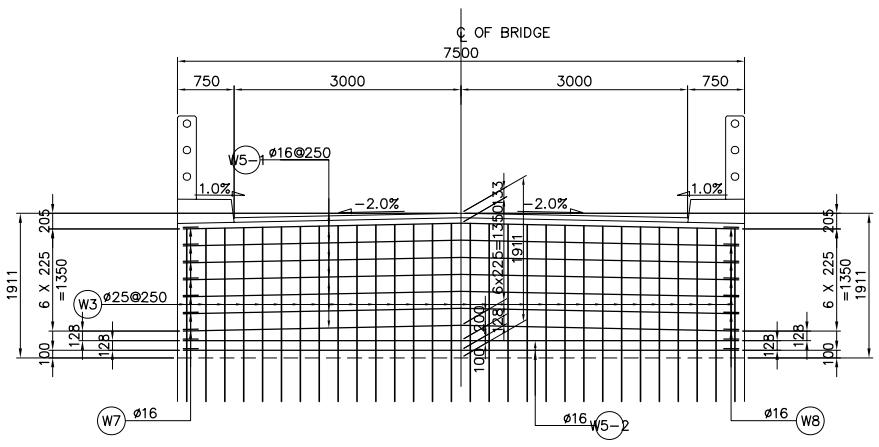

3 - SECTION
SCALE 1:50

A - ABUTMENT DETAIL
SCALE 1:50

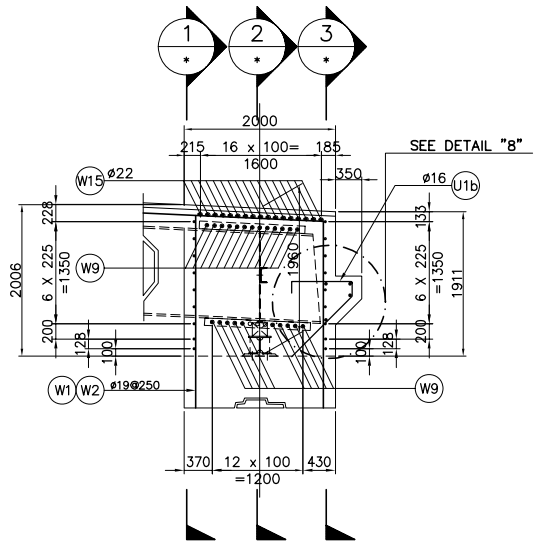

4 - SECTION
SCALE 1:50

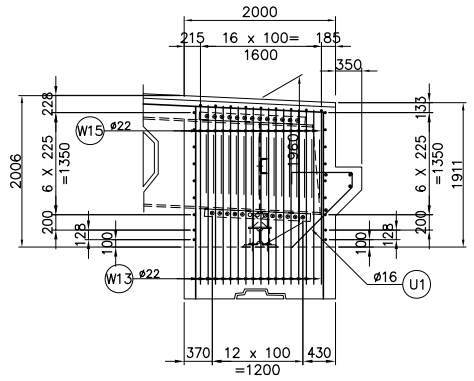

5 - SECTION
SCALE 1:50

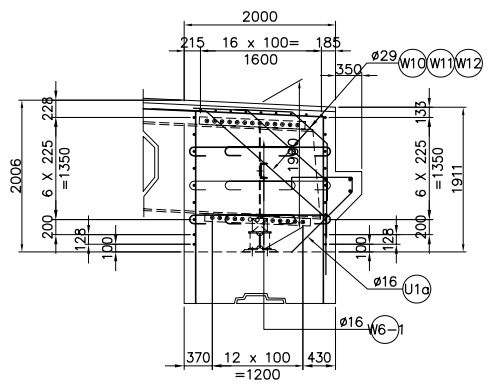

6 - SECTION
SCALE 1:50

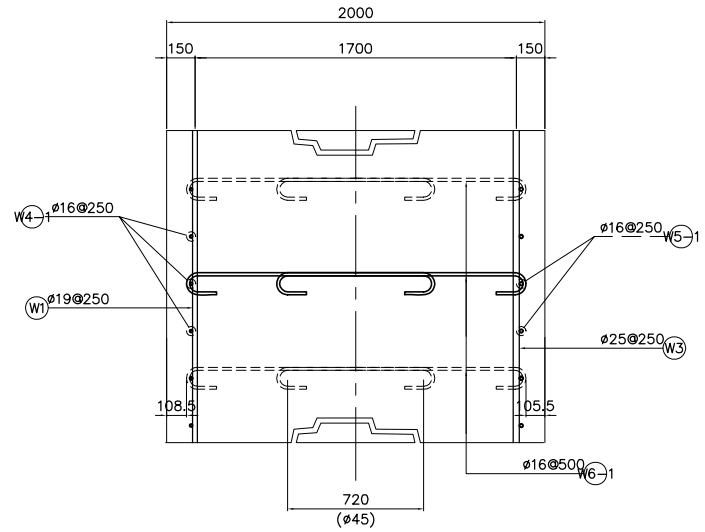

7 - DETAIL
SCALE 1:20

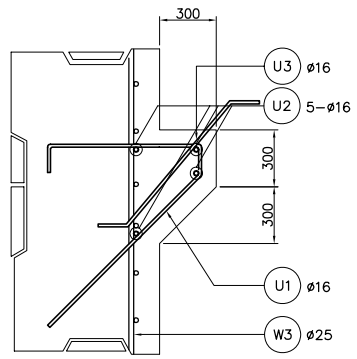

8 - DETAIL
SCALE 1:20

DIRECTORATE GENERAL OF HIGHWAY MINISTRY OF PUBLIC WORKS THE REPUBLIC OF INDONESIA	JICA JAPAN INTERNATIONAL COOPERATION AGENCY	KATAHIRA & ENGINEERS INTERNATIONAL	THE BASIC DESIGN STUDY ON THE PROJECT FOR THE IMPROVEMENT OF BRIDGES IN NIAS ISLAND IN THE REPUBLIC OF INDONESIA	TITLE : NOU A BRIDGE ABUT. A1 & A2 REINF. DETAILS (3 of 4)	SCALE : AS SHOWN	DRAWING No: 8-5 Rev.

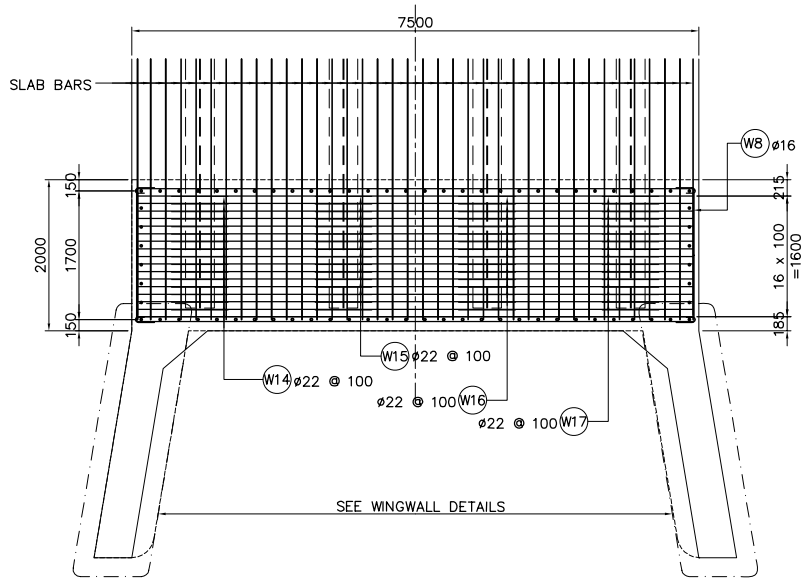

7 - SECTION
SCALE 1:50

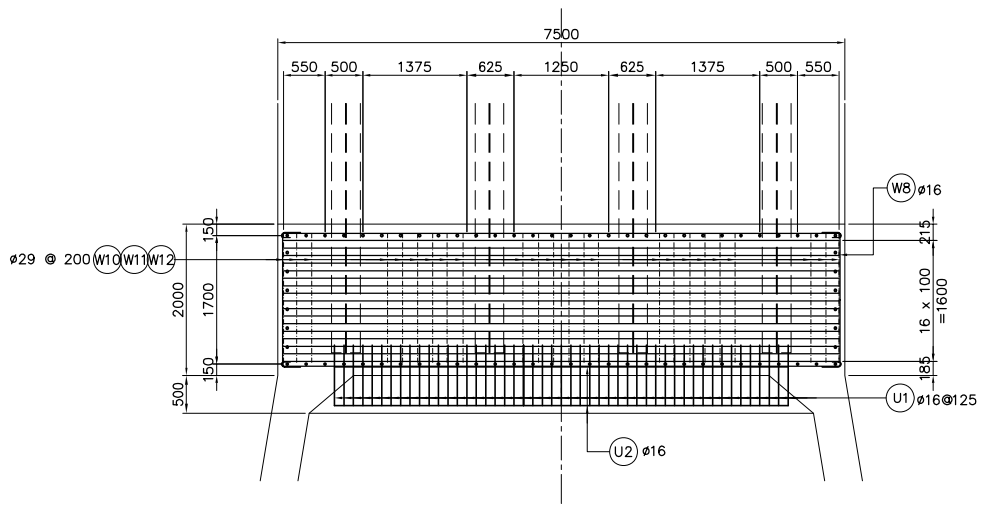

8 - SECTION
SCALE 1:50

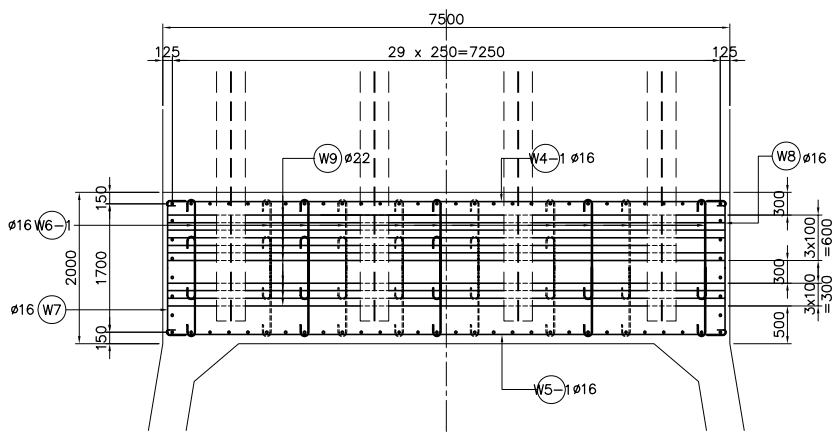

9 - SECTION
SCALE 1:50

B - ABUTMENT DETAIL
SCALE 1:50

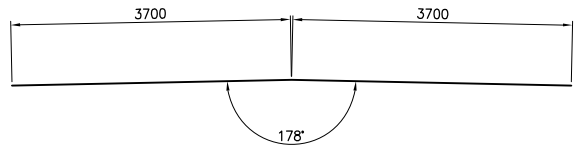

W4-1 14-ø16 x 7426

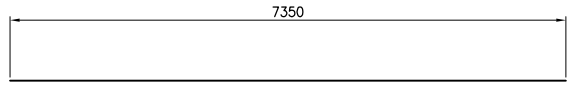

W4-2 4-ø16 x 7350

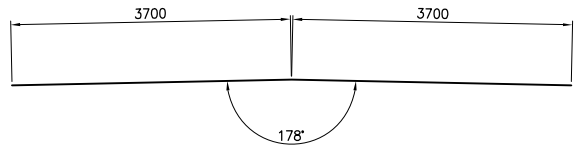

W5-1 14-ø16 x 7426

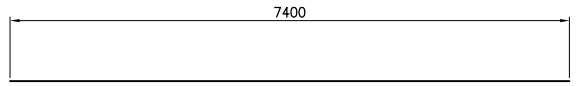

W5-2 4-ø16 x 7400

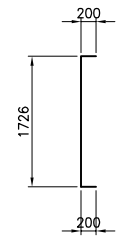

W7 18-ø16 x 2140

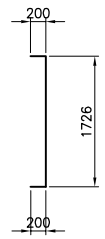

W8 18-ø16 x 2140

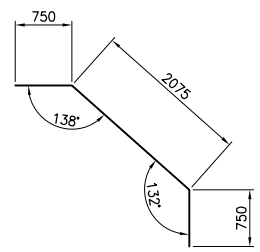

W10 48-ø29 x 3575

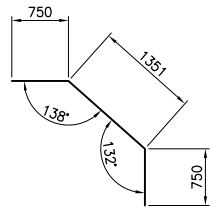

W11 48-ø29 x 2851

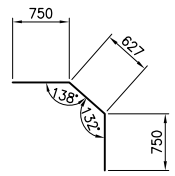

W12 48-ø29 x 2127

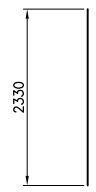

W13 256-ø22 x 2330

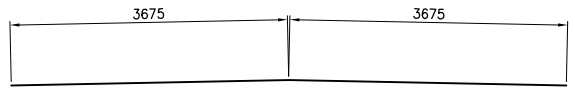

W9 46-ø22 x 7350

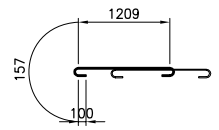

W6-1 36-ø16 x 3446

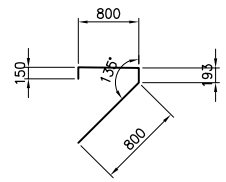

U1 96-ø16 x 1943

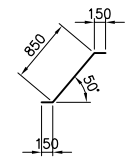

U3 96-ø16 x 1150

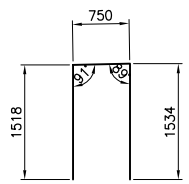

W14 32-ø22 x 3802
W17 32-ø22 x 3802

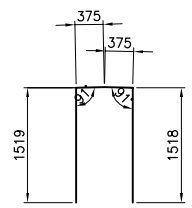

W15 32-ø22 x 3800
W16 32-ø22 x 3800

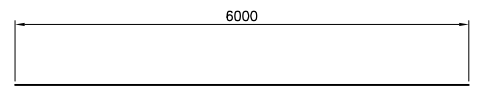

U2 8-ø16 x 6000

SCHEDULE OF REINFORCEMENT

	BARK MARK	BAR SIZE	LENGTH PER BAR	QTY.	UNIT WT.	WT. PER BAR	TOTAL WT.
ABUTMENT A1 & A2	W4-1	D-16	7.4	14	1.578	11.677	163.48
	W4-2	D-16	7.35	4	1.578	11.598	46.39
	W5-1	D-16	7.4	14	1.578	11.677	163.48
	W5-2	D-16	7.4	4	1.578	11.677	46.71
	W6-1	D-16	3.446	36	1.578	5.438	195.77
	W7	D-16	2.14	18	1.578	3.377	60.786
	W8	D-16	2.14	18	1.578	3.377	60.786
	W9	D-22	7.35	46	2.984	21.932	1008.87
	W10	D-29	3.575	48	5.185	18.536	889.73
	W11	D-29	2.851	48	5.185	14.782	709.54
	W12	D-29	2.127	48	5.185	11.028	529.34
	W13	D-22	2.330	256	2.984	6.953	1779.97
	W14	D-22	3.802	32	2.984	11.345	363.04
	W15	D-22	3.8	32	2.984	11.339	362.85
	W16	D-22	3.8	32	2.984	11.339	362.85
	W17	D-22	3.802	32	2.984	11.345	363.04
	U1	D-16	1.943	96	1.578	3.066	294.336
	U2	D-16	6.0	8	1.578	9.468	75.744
	U3	D-16	1.150	96	1.578	1.815	174.24
						SD-40 TOTAL =	7650.952 Kgs.

DIRECTORATE GENERAL OF HIGHWAY MINISTRY OF PUBLIC WORKS THE REPUBLIC OF INDONESIA	JICA JAPAN INTERNATIONAL COOPERATION AGENCY	KATAHIRA & ENGINEERS INTERNATIONAL	THE BASIC DESIGN STUDY ON THE PROJECT FOR THE IMPROVEMENT OF BRIDGES IN NIAS ISLAND IN THE REPUBLIC OF INDONESIA	TITLE : NOU A BRIDGE ABUT. A1 & A2 REINF. DETAILS (4 of 4)	SCALE : AS SHOWN	DRAWING No: 8-6 Rev.

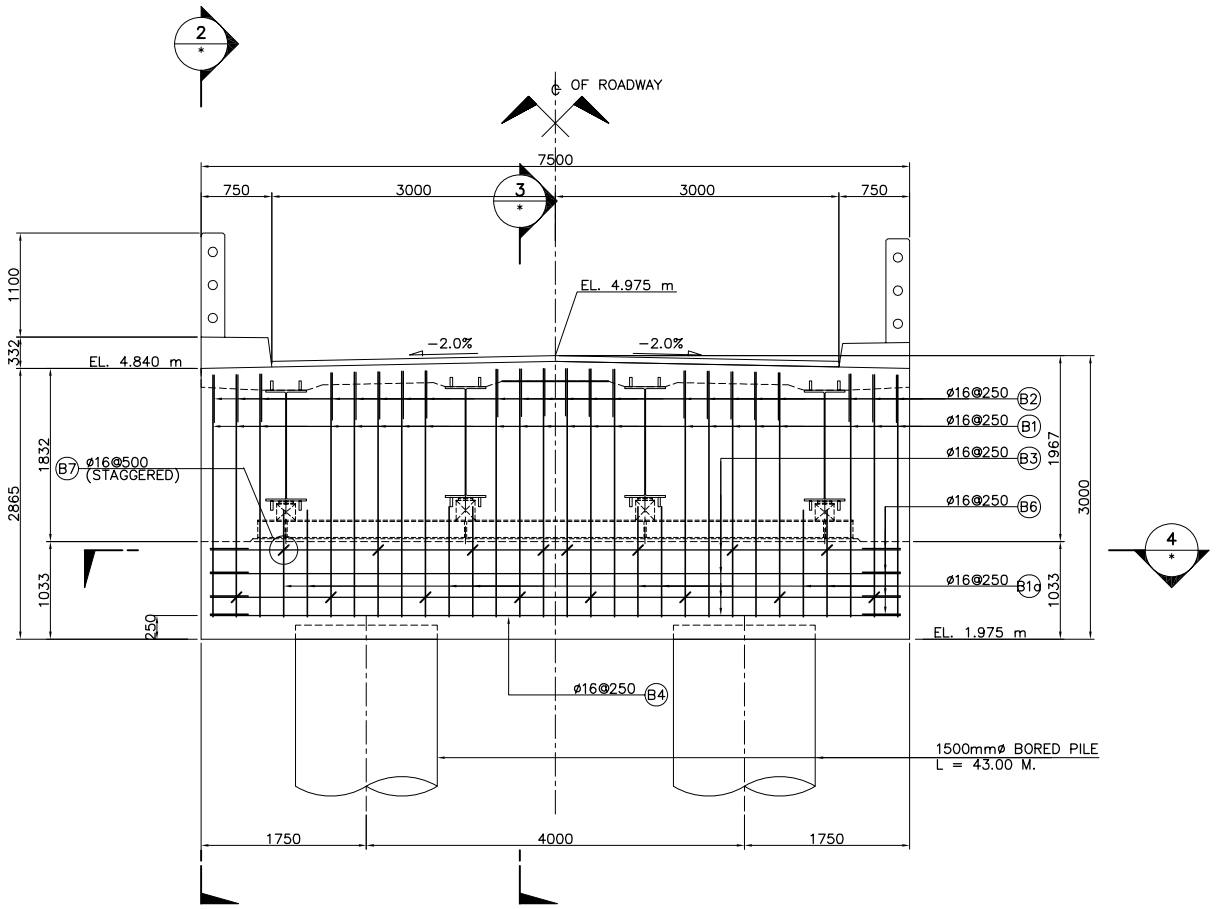

1 SECTION
SCALE 1:40

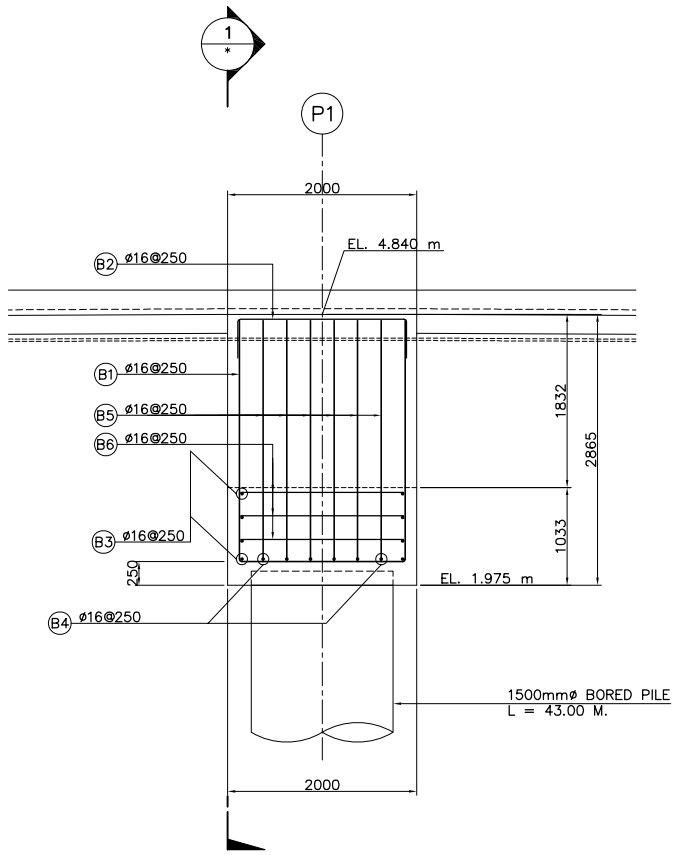

2 SECTION
SCALE 1:40

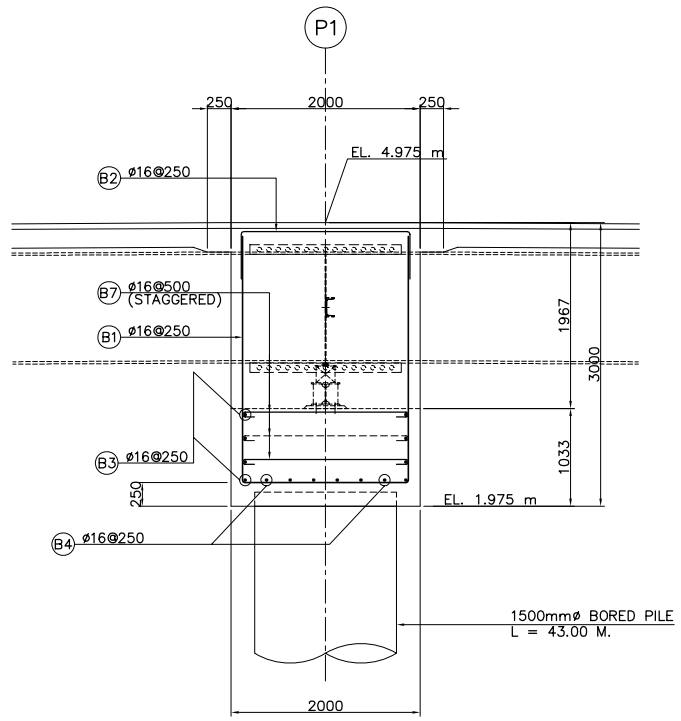

3 SECTION
SCALE 1:40

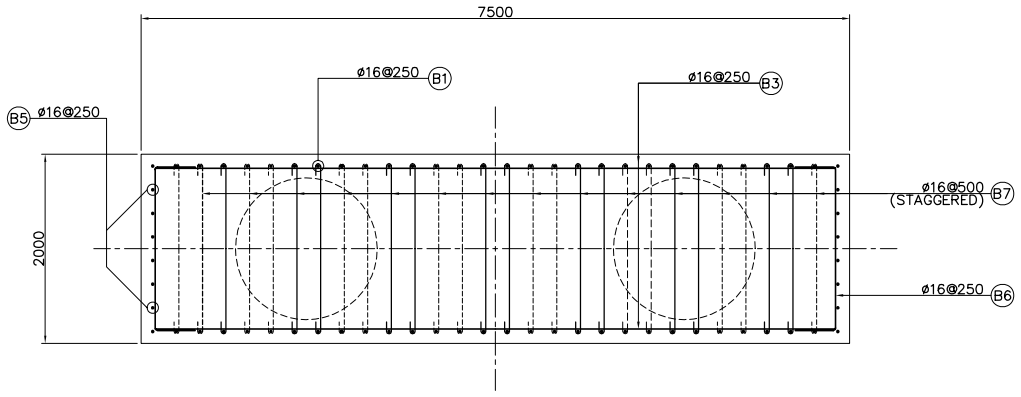

4 SECTION
SCALE 1:40

DIRECTORATE GENERAL OF HIGHWAY MINISTRY OF PUBLIC WORKS THE REPUBLIC OF INDONESIA	JICA JAPAN INTERNATIONAL COOPERATION AGENCY	KATAHIRA & ENGINEERS INTERNATIONAL	THE BASIC DESIGN STUDY ON THE PROJECT FOR THE IMPROVEMENT OF BRIDGES IN NIAS ISLAND IN THE REPUBLIC OF INDONESIA	TITLE : NOU A BRIDGE PIER P1 REINF. DETAILS (1 of 3)	SCALE : AS SHOWN	DRAWING No: 8-7 Rev.

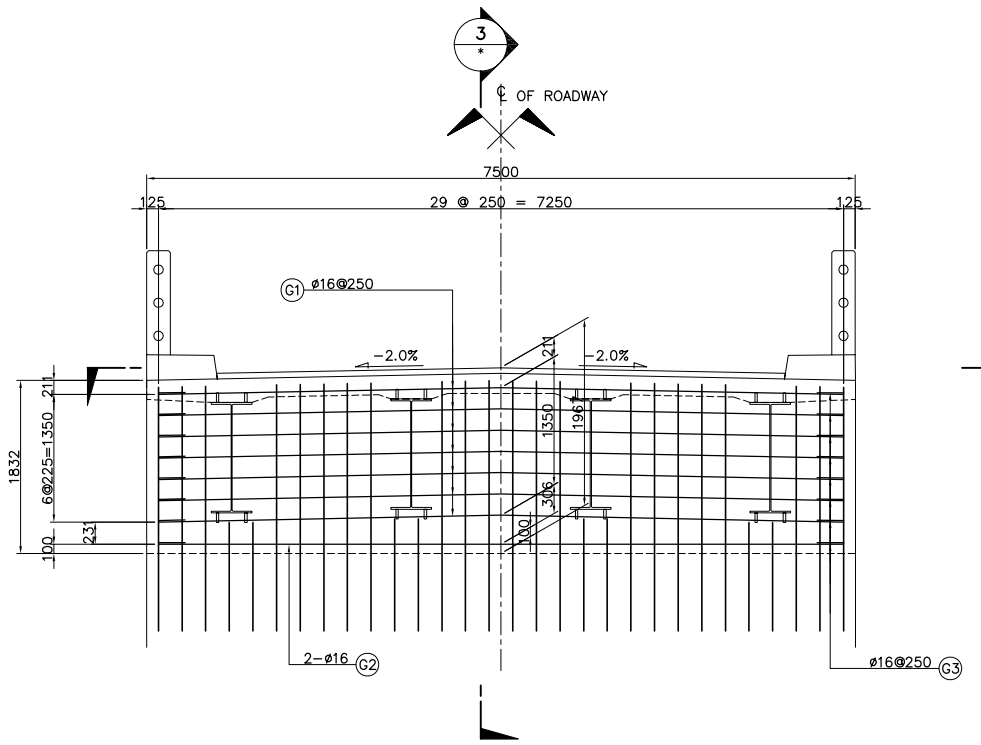

1 - SECTION
SCALE 1:40

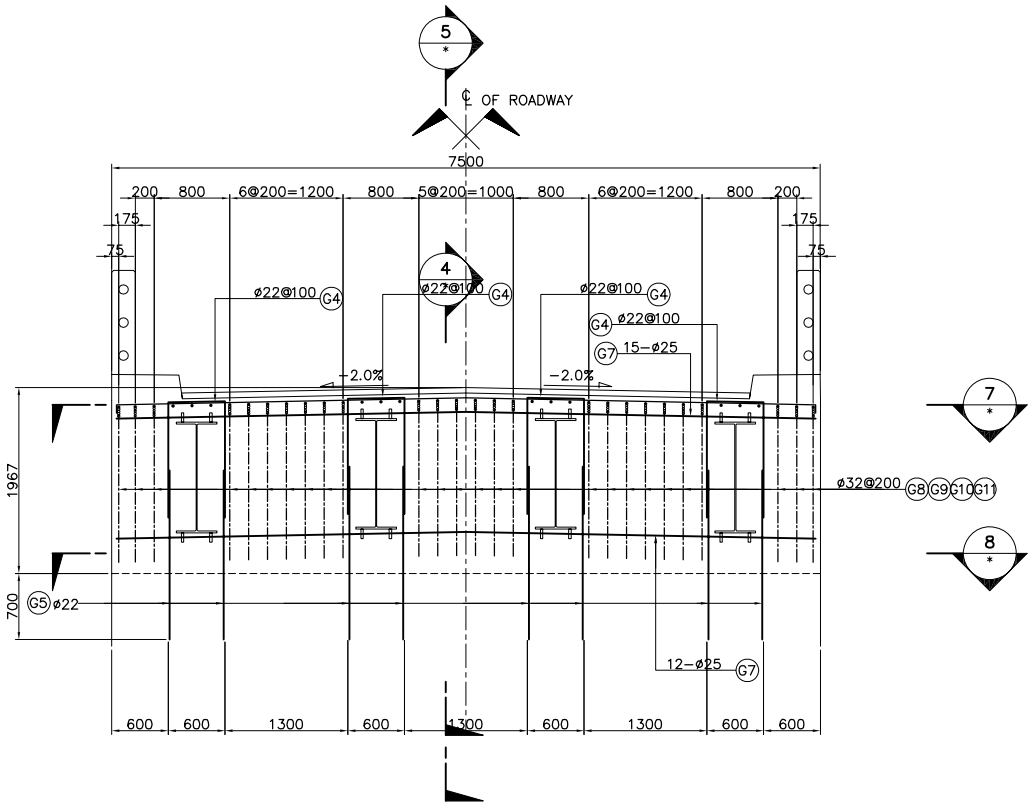

2 - SECTION
SCALE 1:40

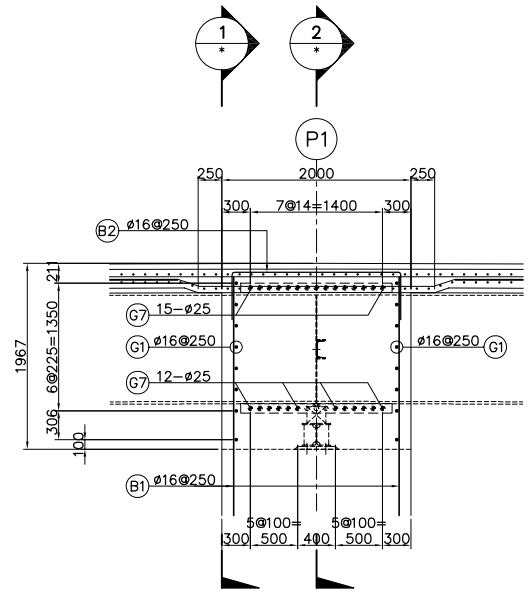

3 - SECTION
SCALE 1:40

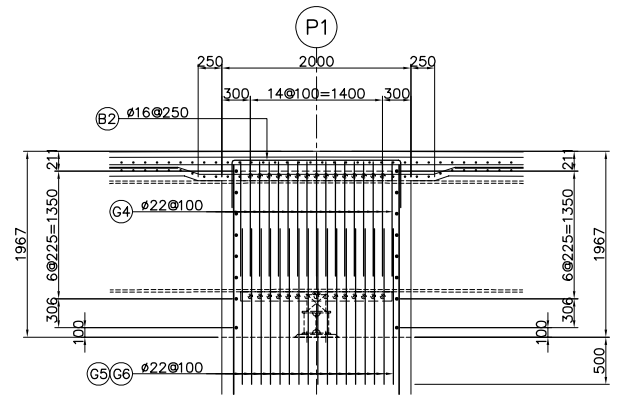

4 - SECTION
SCALE 1:40

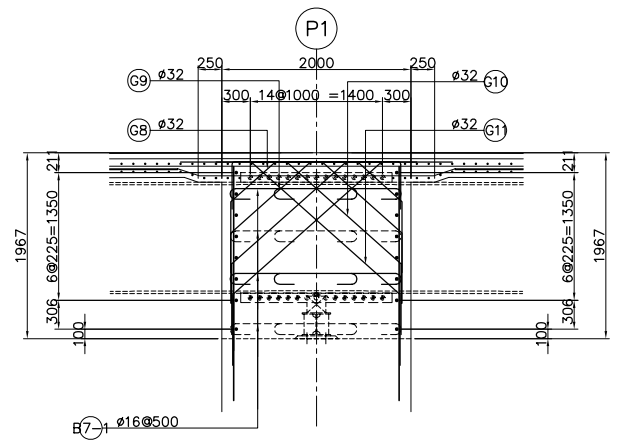

5 - SECTION
SCALE 1:40

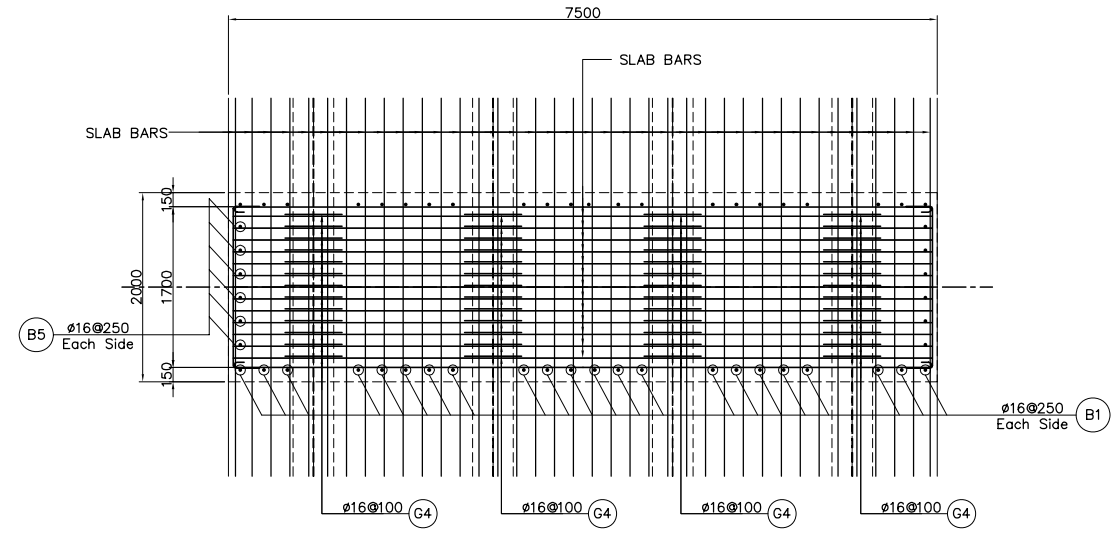

6 - SECTION
SCALE 1:40

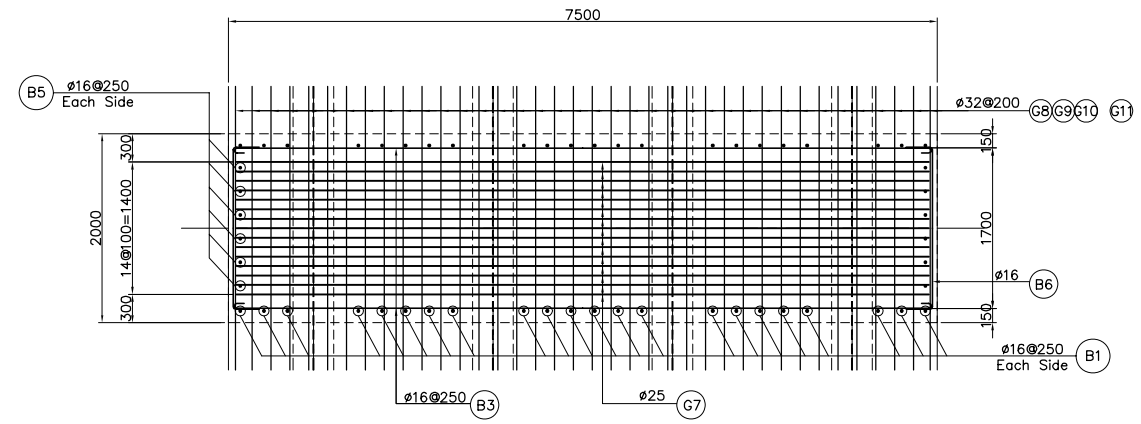

7 - SECTION
SCALE 1:40

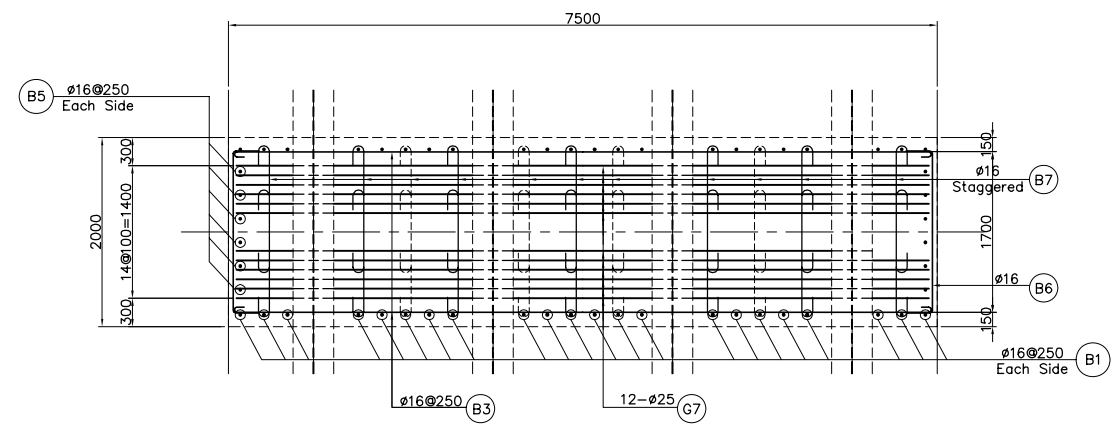

8 - SECTION
SCALE 1:40

DIRECTORATE GENERAL OF HIGHWAY MINISTRY OF PUBLIC WORKS THE REPUBLIC OF INDONESIA	JICA JAPAN INTERNATIONAL COOPERATION AGENCY	KATAHIRA & ENGINEERS INTERNATIONAL	THE BASIC DESIGN STUDY ON THE PROJECT FOR THE IMPROVEMENT OF BRIDGES IN NIAS ISLAND IN THE REPUBLIC OF INDONESIA	TITLE : NOU A BRIDGE PIER P1 REINF. DETAILS (2 of 3)	SCALE : AS SHOWN	DRAWING No: 8-8 Rev.

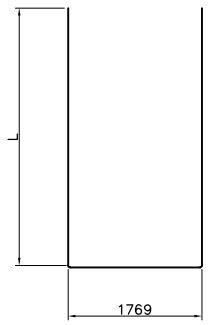

B1 2 – ø16 X 6923
B1 2 – ø16 X 6933
B1 2 – ø16 X 6943
B1 2 – ø16 X 6973
B1 2 – ø16 X 6983
B1 2 – ø16 X 6993
B1 2 – ø16 X 7003
B1 2 – ø16 X 7013
B1 2 – ø16 X 7043
B1 2 – ø16 X 7053
B1 2 – ø16 X 7063

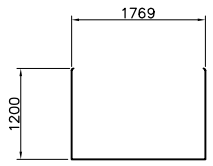

B1a 8 – ø16 X 4169

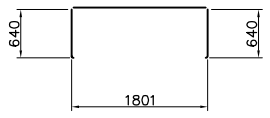

B2 22 – ø16 X 3081

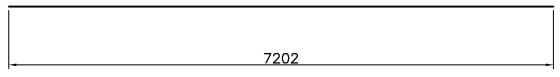

B3 8 – ø16 X 7202

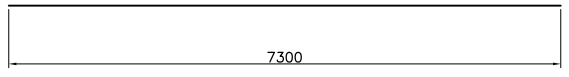

B4 6 – ø16 X 7300

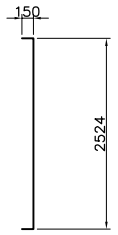

B5 12 – ø16 X 2824

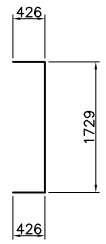

B6 8 – ø16 X 2581

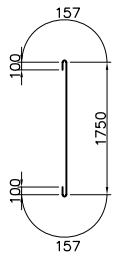

B7 16 – ø16 X 2264

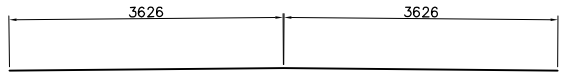

G1 14 – ø16 X 7252

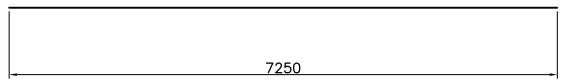

G2 2 – ø16 X 7250

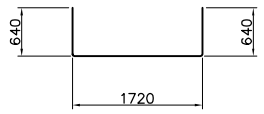

G3 16 – ø16 X 3000

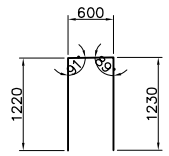

G4 68 – ø22 X 3050

G5 68 – ø22 X 1627

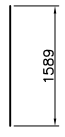

G6 68 – ø22 X 1589

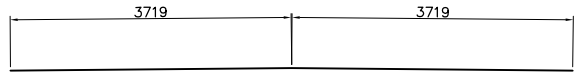

G7 27 – ø25 X 7438

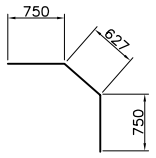

G8 52 – ø32 X 2127

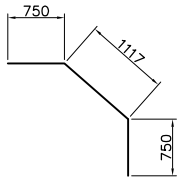

G9 52 – ø32 X 2617

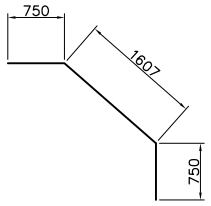

G10 52 – ø32 X 3107

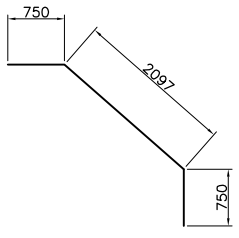

G11 52 – ø32 X 3597

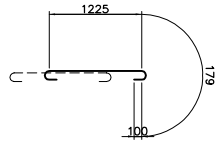

B7–1 18 – ø16 X 3566

SCHEDULE OF REINFORCEMENT

PIER P1

BARK MARK	BAR SIZE	LENGTH PER BAR	QTY.	UNIT WT.	WT. PER BAR	TOTAL WT.
B1	D–16	8.762	22	1.578	13.83	304.26
B1a	D–16	4.169	8	1.578	6.58	52.64
B2	D–16	3.081	22	1.578	4.86	106.92
B3	D–16	7.202	8	1.578	11.36	90.88
B4	D–16	7.3	6	1.578	11.52	69.12
B5	D–16	2.824	12	1.578	4.46	53.52
B6	D–16	2.581	8	1.578	4.07	32.56
B7	D–16	22.64	16	1.578	3.57	57.12
B7–1	D–16	3.686	18	1.578	5.82	104.76
G1	D–16	7.252	14	1.578	11.44	160.16
G2	D–16	7.25	2	1.578	11.44	22.88
G3	D–16	3.0	16	1.578	4.73	75.68
G4	D–22	3.05	68	2.984	9.10	618.8
G5	D–22	1.627	68	2.984	4.85	329.8
G6	D–22	1.589	68	2.984	4.74	322.32
G7	D–25	7.438	27	3.853	28.66	773.82
G8	D–32	2.127	52	6.313	13.43	698.36
G9	D–32	2.617	52	6.313	16.52	859.04
G10	D–32	3.107	52	6.313	19.61	1019.72
G11	D–32	3.597	52	6.313	22.71	1180.92

SD–40 TOTAL = 6,933.28 Kgs.

DIRECTORATE GENERAL OF HIGHWAY
MINISTRY OF PUBLIC WORKS
THE REPUBLIC OF INDONESIA

JICA
JAPAN INTERNATIONAL COOPERATION AGENCY

KATAHIRA & ENGINEERS INTERNATIONAL

THE BASIC DESIGN STUDY ON THE PROJECT FOR THE IMPROVEMENT OF BRIDGES IN NIAS ISLAND IN THE REPUBLIC OF INDONESIA

TITLE : NOU A BRIDGE
PIER P1 REINF. DETAILS (3 of 3)

SCALE : AS SHOWN

DRAWING No: 8-9

Rev.

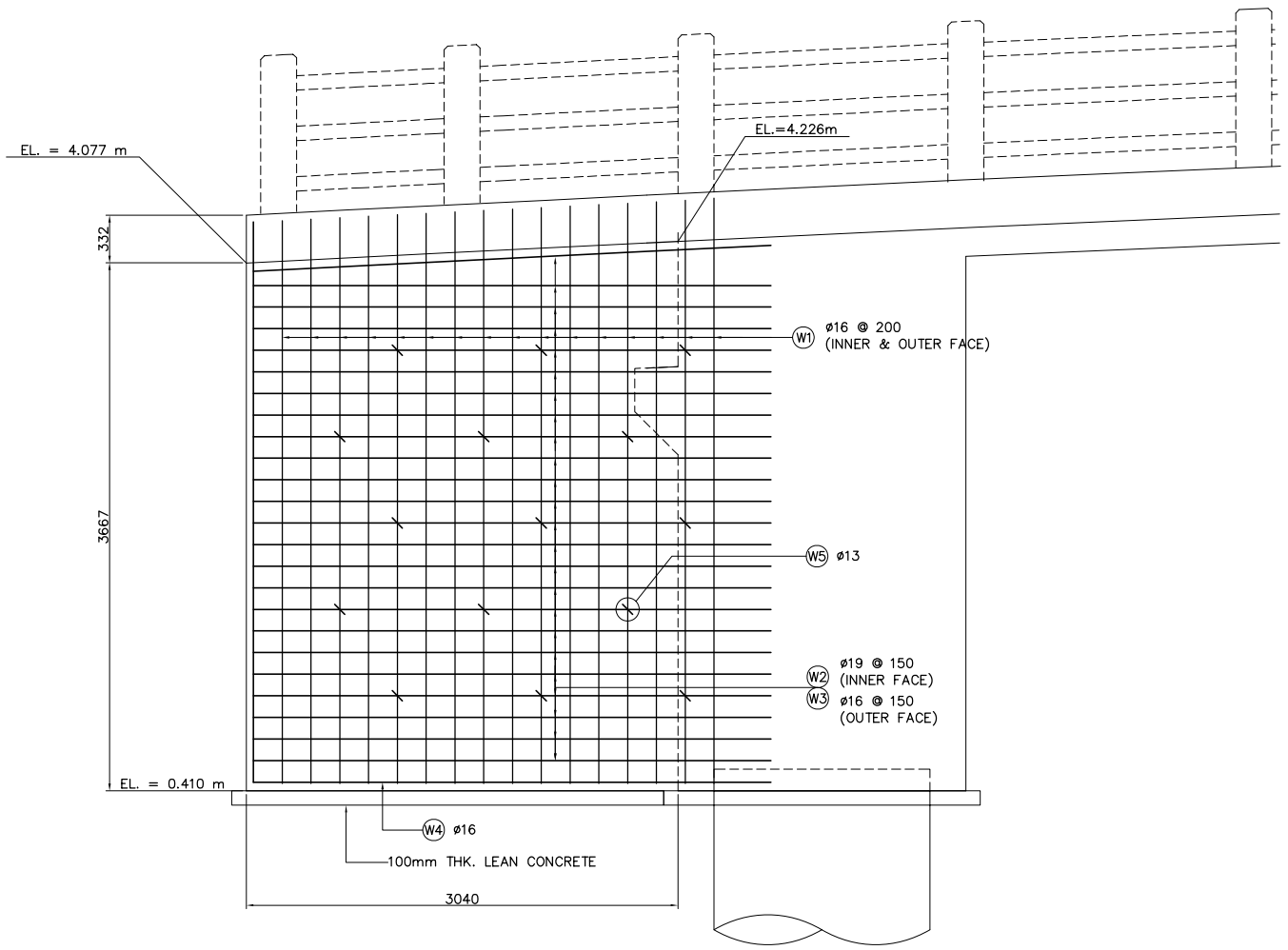

1 - WINGWALL ELEVATION
SCALE 1:50

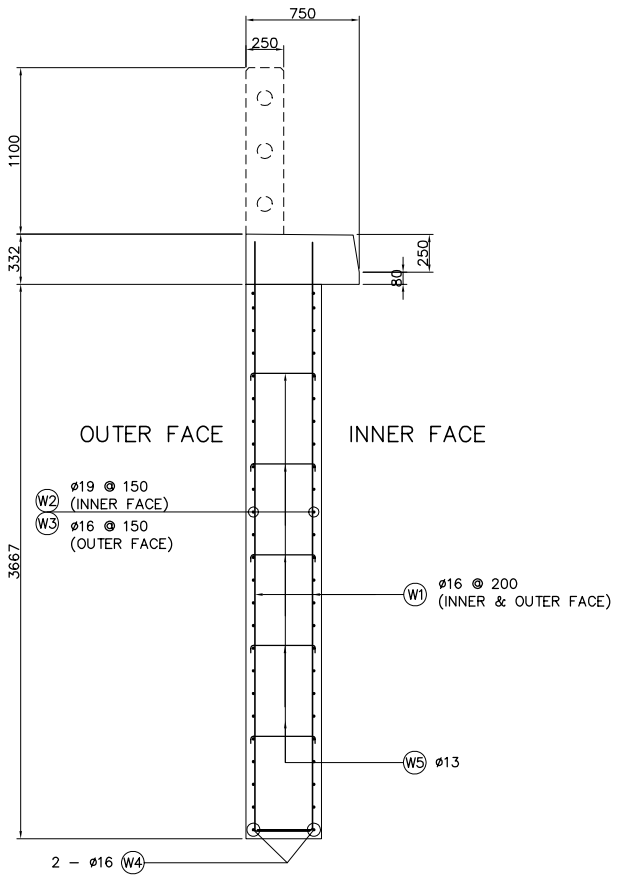

3 - SECTION
SCALE 1:50

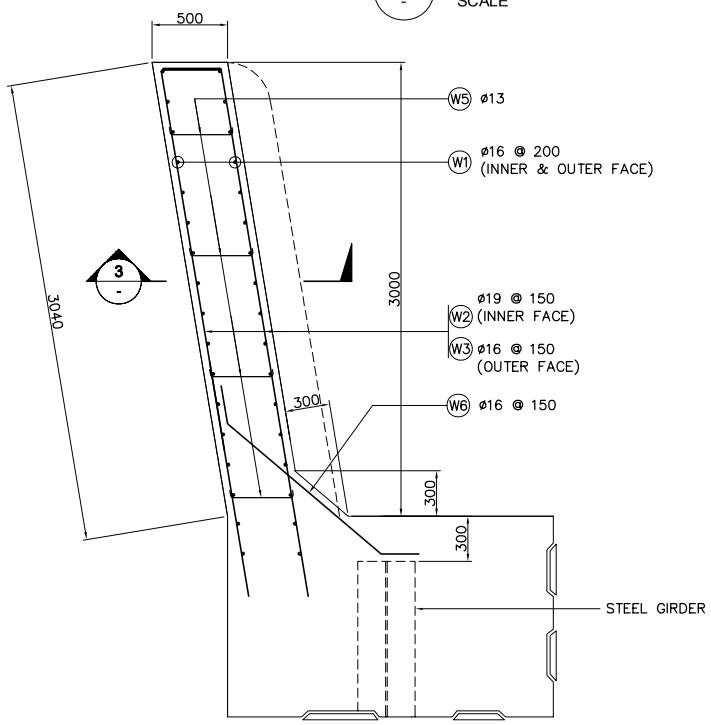

2 - WINGWALL PLAN
SCALE 1:50

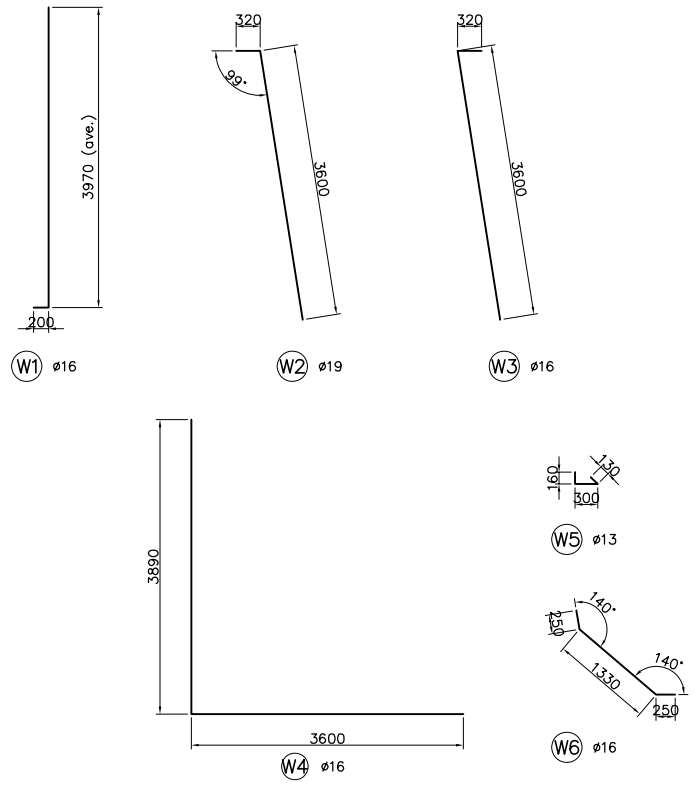

4 - BAR BENDING DIAGRAM
NOT TO SCALE

SCHEDULE OF REINFORCEMENT

BAR MARK	BAR SIZE	BAR LENGTH	QTY.	UNIT WT.	WT. PER BAR	TOTAL WT.
W1	D–16	4.170 AVE	32	1.578	6.58	210.56
W2	D–19	3.920	24	2.226	8.73	209.52
W3	D–16	3.920	24	1.578	6.19	148.56
W4	D–16	7.490	2	1.578	11.82	23.64
W5	D–13	0.590	15	1.042	0.61	9.15
W6	D–16	1.830	24	1.578	3.57	69.36

QUANTITIES FOR 1 WINGWALL ONLY SD–40 TOTAL= 670.79Kgs

DIRECTORATE GENERAL OF HIGHWAY MINISTRY OF PUBLIC WORKS THE REPUBLIC OF INDONESIA	JICA JAPAN INTERNATIONAL COOPERATION AGENCY	KATAHIRA & ENGINEERS INTERNATIONAL	THE BASIC DESIGN STUDY ON THE PROJECT FOR THE IMPROVEMENT OF BRIDGES IN NIAS ISLAND IN THE REPUBLIC OF INDONESIA	TITLE : NOU A BRIDGE ABUTMENT A1 & A2 WINGWALL DETAILS	SCALE : AS SHOWN	DRAWING No: 8-10 Rev.

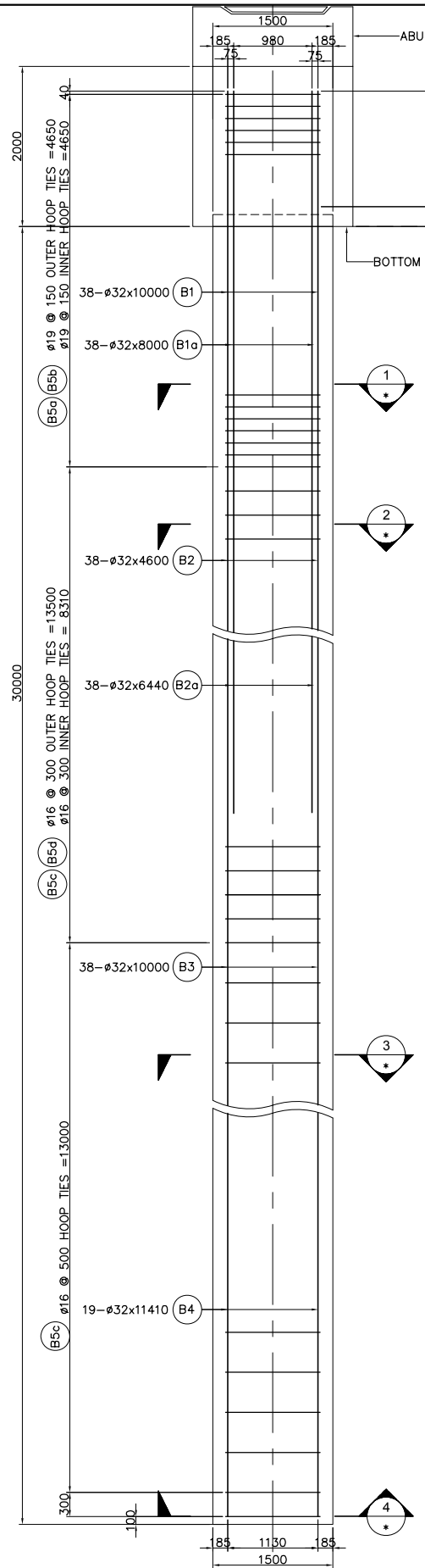

A BORED PILE ELEVATION
SCALE 1 : 80

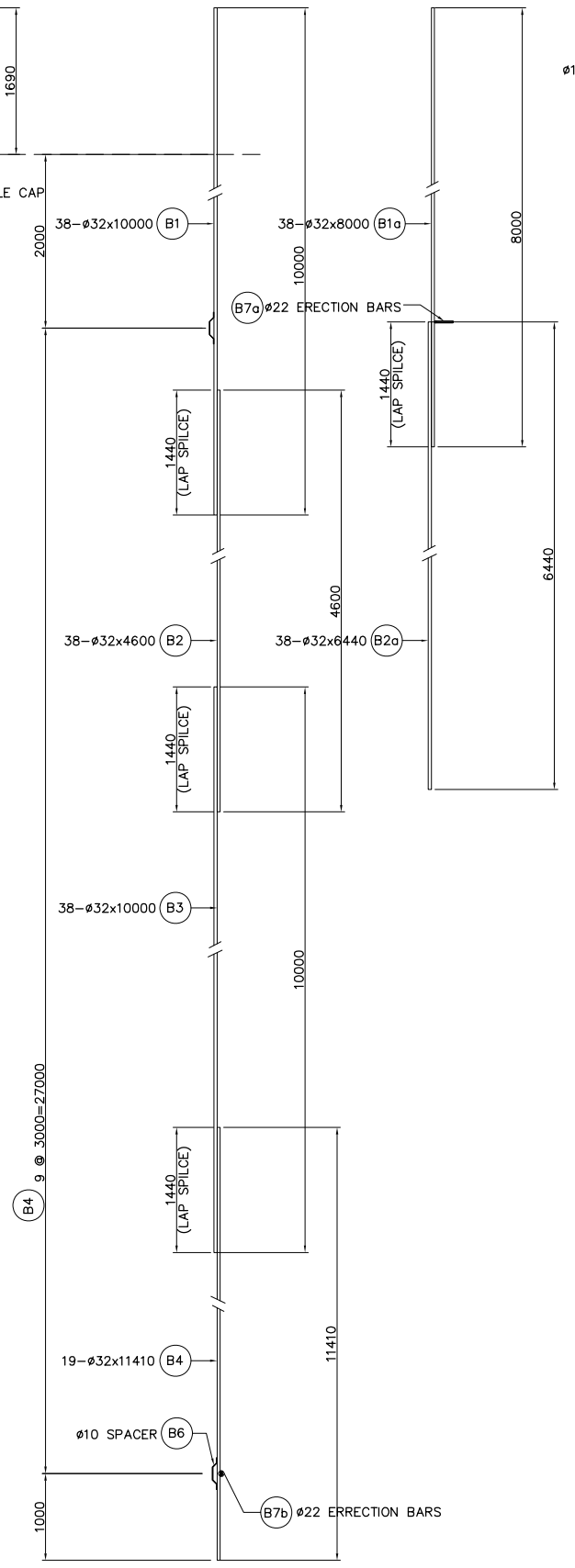

B REBAR SCHEMATIC DIAGRAM/
LOCATION OF STIFFENER/SPACER
SCALE 1 : 80

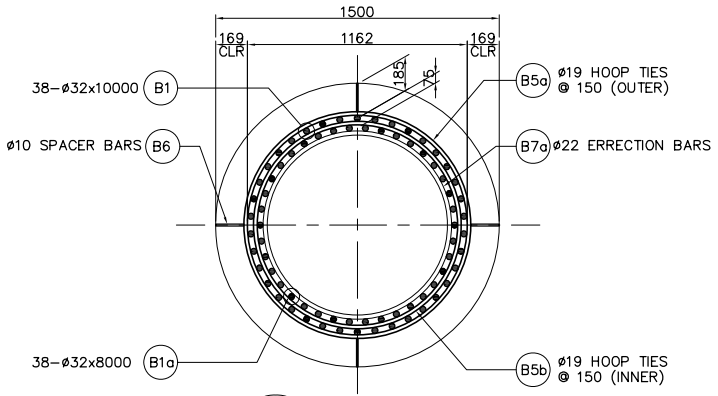

1 SECTION
SCALE 1:40

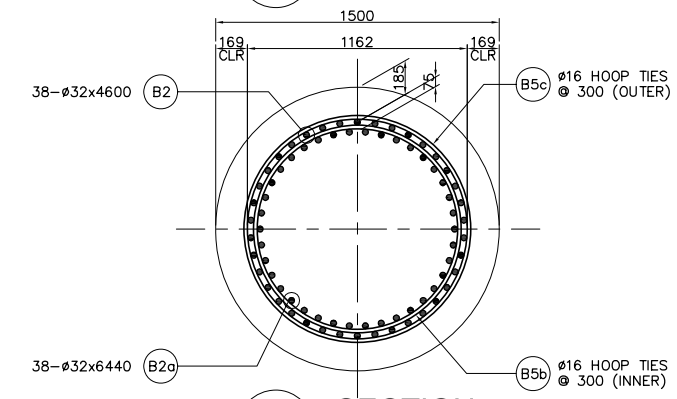

2 SECTION
SCALE 1:40

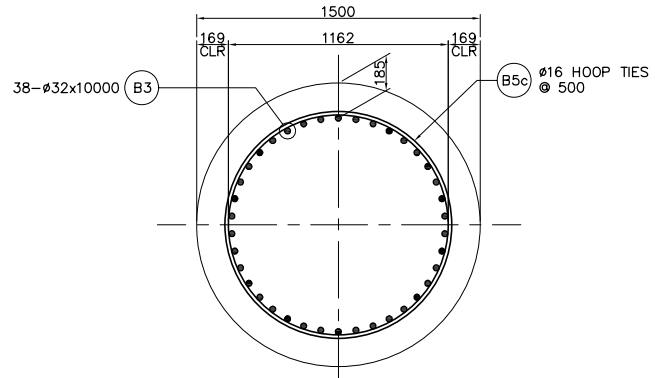

3 SECTION
SCALE 1:40

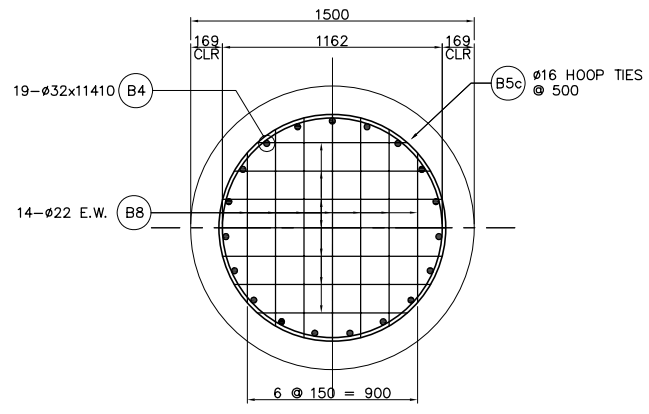

4 SECTION
SCALE 1:40

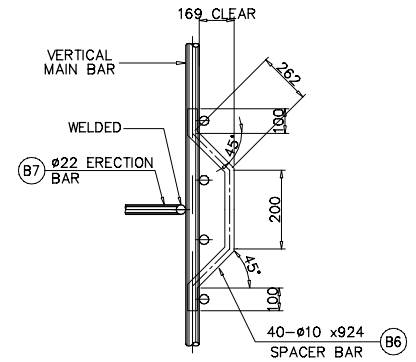

C DETAIL OF ERRECTION/SPACER BAR
NOT TO SCALE

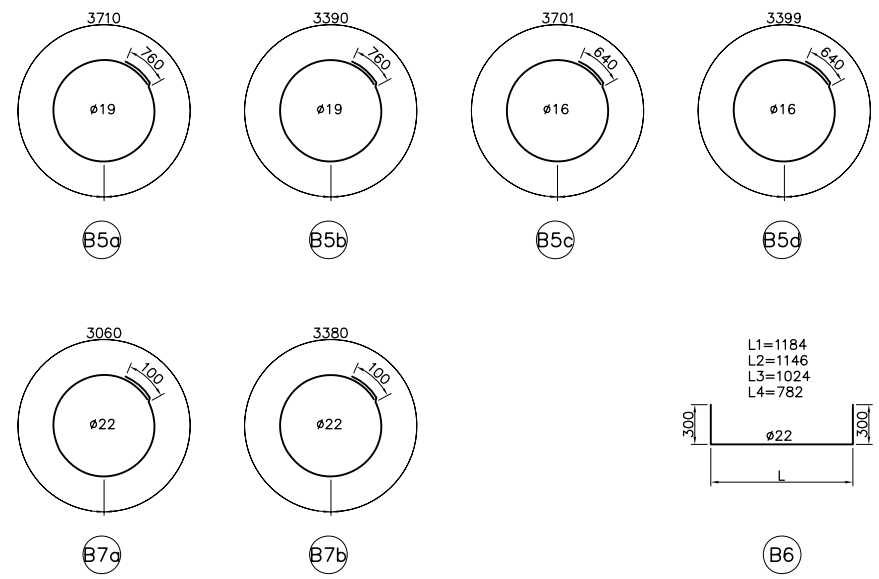

D BAR BENDING DIAGRAM
NOT TO SCALE

SCHEDULE OF REINFORCEMENT

BAR MARK	BAR SIZE	BAR LENGTH	QTY.	UNIT WT.	WT. PER BAR	TOTAL WT.
B1	32	10.00	38	6.313	63.13	2398.94
B1a	32	8.00	38	6.313	50.50	1919.00
B2	32	4.60	38	6.313	29.04	1103.52
B2a	32	6.44	38	6.313	40.66	1545.08
B3	32	10.00	38	6.313	63.13	2398.94
B4	32	11.41	19	6.313	72.03	1368.57
B5a	19	4.47	32	2.226	9.95	318.40
B5b	19	4.15	32	2.226	9.24	295.68
B5c	16	4.341	72	1.578	6.85	493.20
B5d	16	4.039	28	1.578	6.37	178.36
B6	10	0.924	40	0.617	0.57	22.80
B7a	22	3.16	4	2.984	9.43	37.72
B7b	22	3.48	6	2.984	10.38	62.28
B8	22	1.613(ave)	14	2.984	4.81	67.34

QUANTITIES FOR 1 PILE ONLY (NO. OF BORED PILES = 3) TOTAL = 12,209.83Kgs/EACH

DIRECTORATE GENERAL OF HIGHWAY MINISTRY OF PUBLIC WORKS THE REPUBLIC OF INDONESIA	JICA JAPAN INTERNATIONAL COOPERATION AGENCY	KATAHIRA & ENGINEERS INTERNATIONAL	THE BASIC DESIGN STUDY ON THE PROJECT FOR THE IMPROVEMENT OF BRIDGES IN NIAS ISLAND IN THE REPUBLIC OF INDONESIA	TITLE : NOU BRIDGE ABUTMENT A1 BORED PILE DETAIL	SCALE : AS SHOWN	DRAWING No: 8-11 Rev.