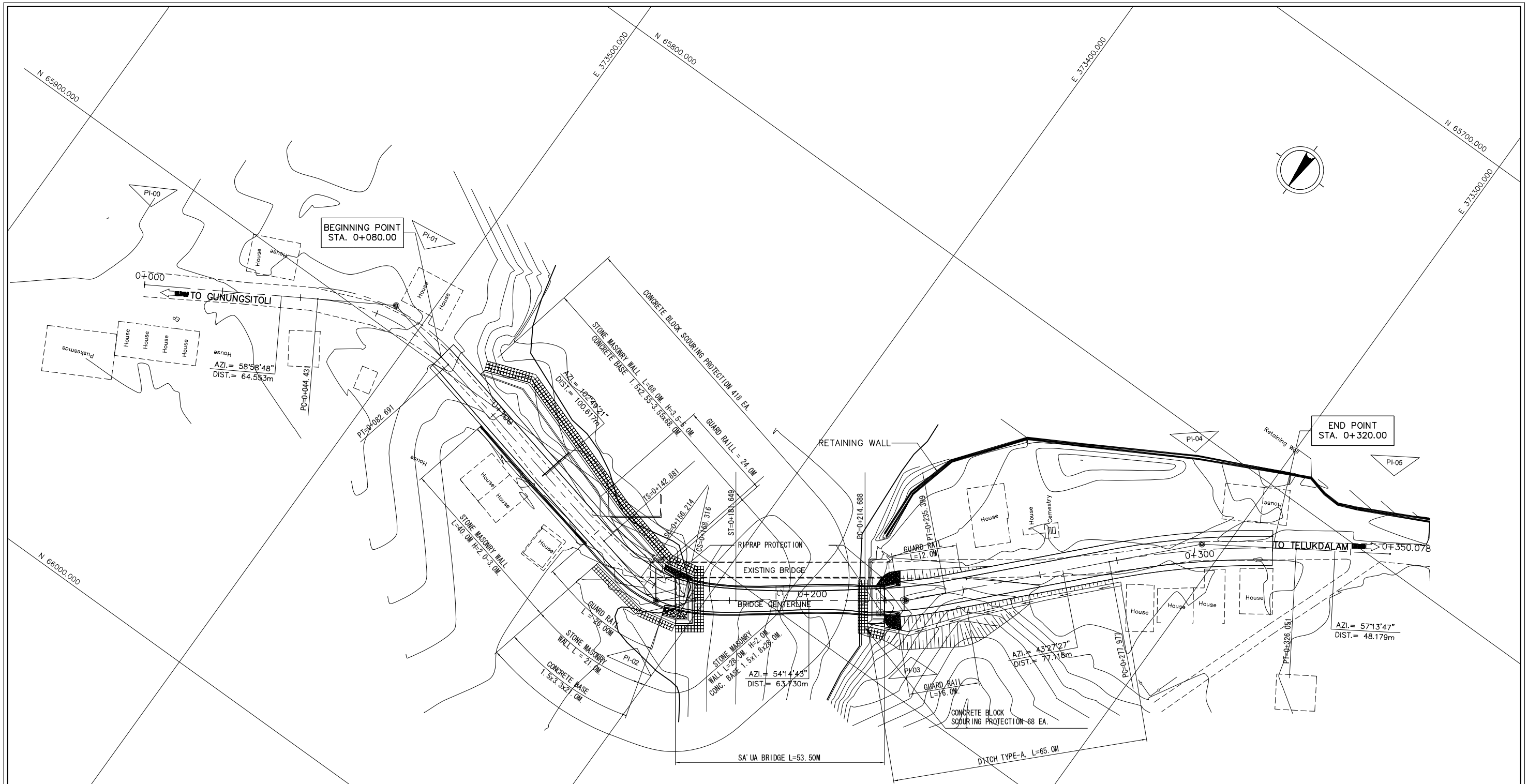

ELEMENTS OF CURVE											
PI NO.	STATION	COORDINATES		Δ	R	T	Lc	E	e%	W	V(kph)
		NORTHING	EASTING								
PI-00	0+000.000	65926.879	373563.553	NO HORIZONTAL CURVE							–
PI-01	0+064.553	65893.613	373508.232	45°50'33"	50.00	20.121	38.260	3.897	–	–	–
PI-03	0+225.075	65878.704	373358.405	10°47'17"	110.00	10.386	20.711	0.489	–	–	–
PI-04	0+302.131	65822.725	373305.362	13°46'20"	200.00	24.154	48.074	1.453	–	–	–
PI-05	0+350.078	65796.647	373264.851								–

ELEMENTS OF CURVE																				
PI NO.	STATION	COORDINATES		Δ	R	A	Ls	θs	Δc	Lc	X	Y	Xm	Ts	TL	TK	Es	e%	W	V(kph)
		NORTHING	EASTING																	
PI-02	0+163.186	65915.943	373410.124	48°34'38"	30.00	20.000	13.330	12°43'45"	23°07'07"	12.105	13.264	0.984	6.654	20.304	8.910	4.464	0.621	2.00%	1.00	–

DIRECTORATE GENERAL OF HIGHWAY
MINISTRY OF PUBLIC WORKS
THE REPUBLIC OF INDONESIA

JICA
JAPAN INTERNATIONAL COOPERATION AGENCY

KEI
KATAHIRA & ENGINEERS INTERNATIONAL

THE BASIC DESIGN STUDY ON THE PROJECT
FOR THE IMPROVEMENT OF BRIDGES IN NIAS ISLAND
IN THE REPUBLIC OF INDONESIA

TITLE :
SA'UA BRIDGE
(GENERAL STE PLAN)

SCALE : 1:1000

DRAWING No: 6-1

Rev.

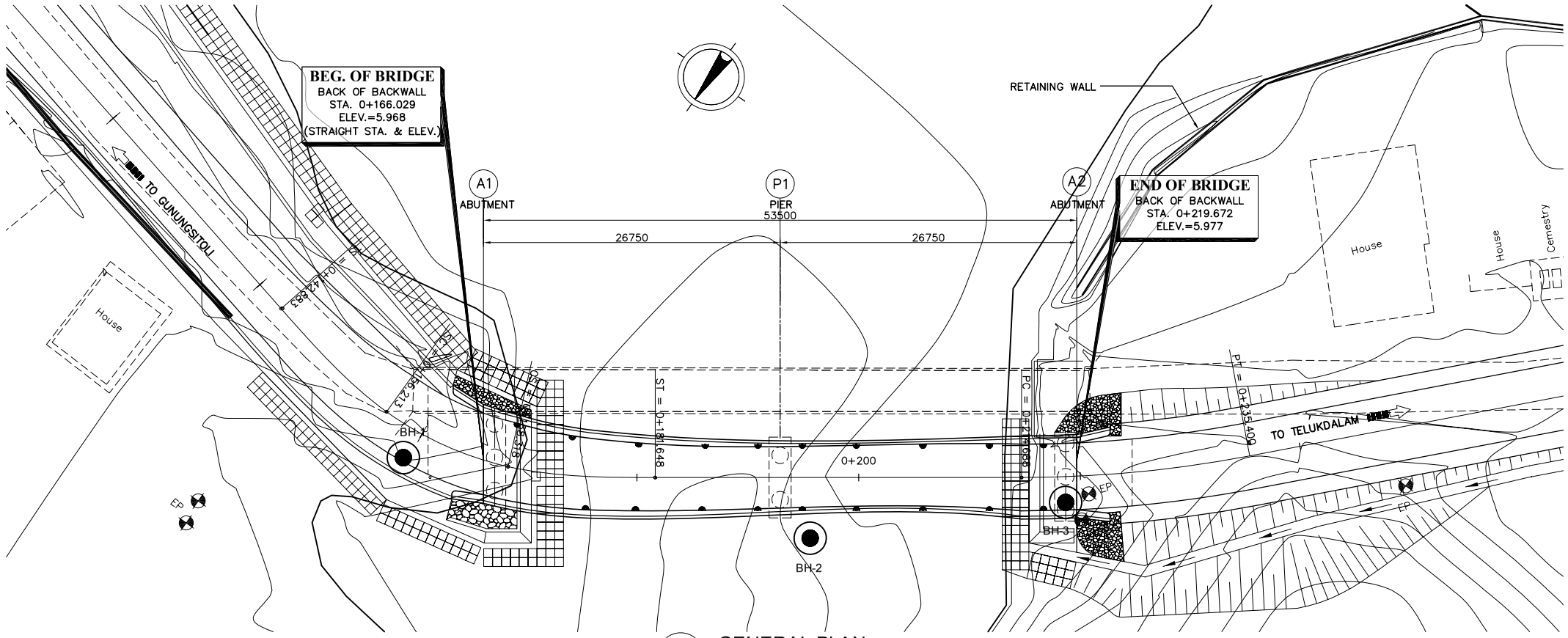

1 GENERAL PLAN
SCALE 1:500

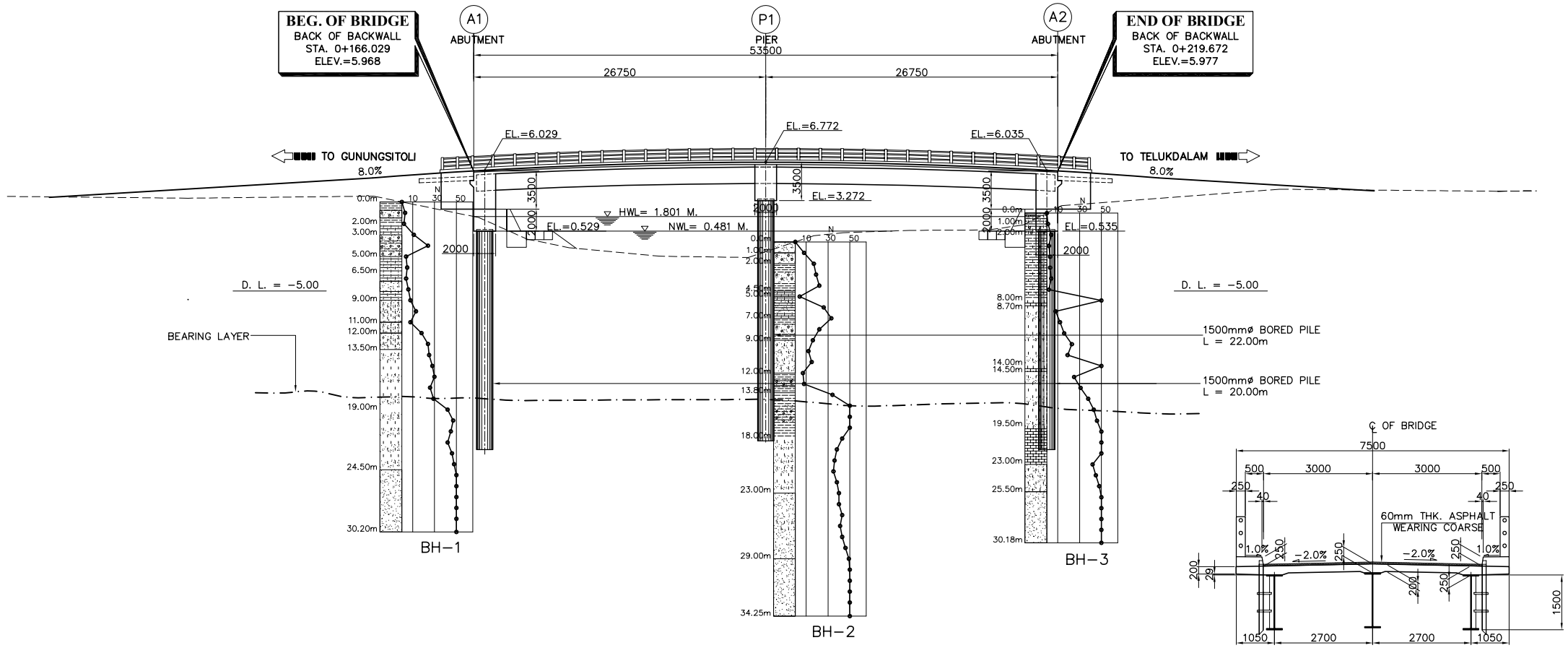

2 GENERAL ELEVATION
SCALE 1:500

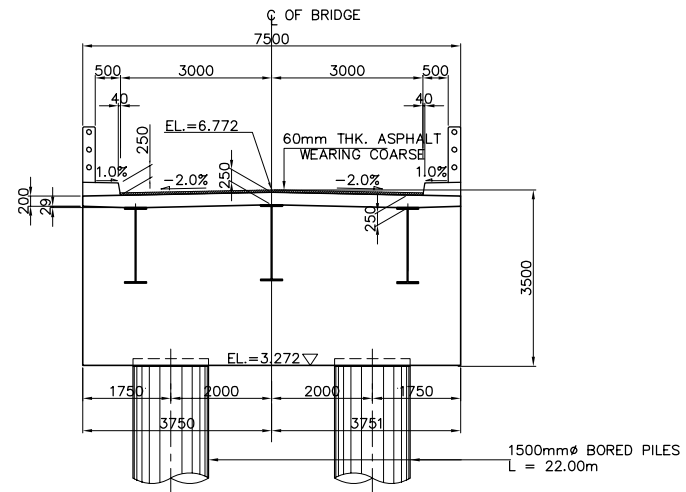

4 SECTION @ PIER
SCALE 1:150

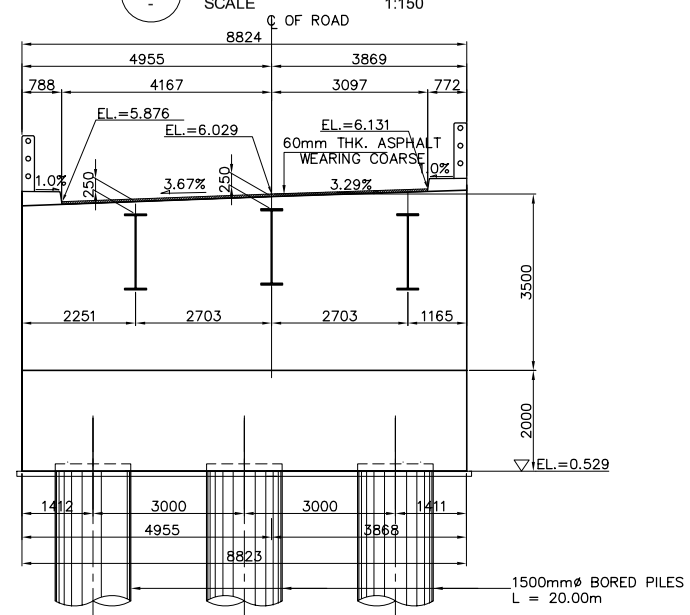

5 SECTION @ ABUTMENT A1
SCALE 1:150

4 SECTION @ MID SPAN
SCALE 1:150

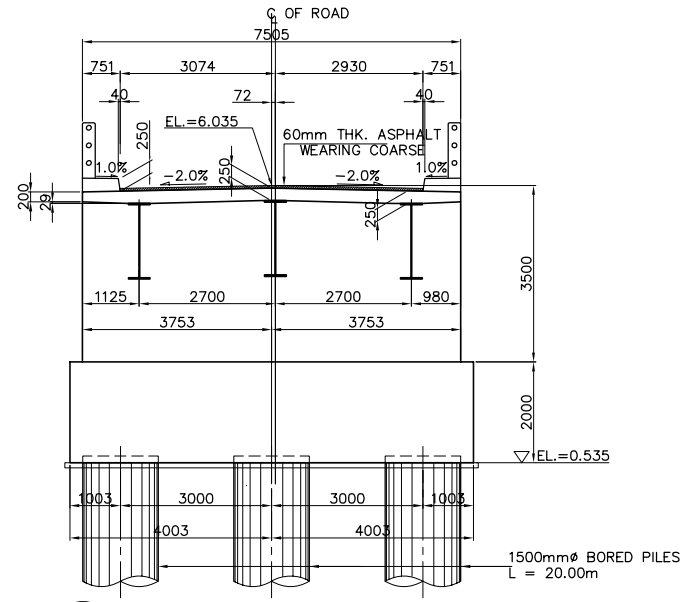

6 SECTION @ ABUTMENT A2
SCALE 1:150

DIRECTORATE GENERAL OF HIGHWAY MINISTRY OF PUBLIC WORKS THE REPUBLIC OF INDONESIA	JICA JAPAN INTERNATIONAL COOPERATION AGENCY	KATAHIRA & ENGINEERS INTERNATIONAL	THE BASIC DESIGN STUDY ON THE PROJECT FOR THE IMPROVEMENT OF BRIDGES IN NIAS ISLAND IN THE REPUBLIC OF INDONESIA	TITLE : SA'UA BRIDGE GENERAL VIEW	SCALE : AS SHOWN	DRAWING No: 6-2

Rev.

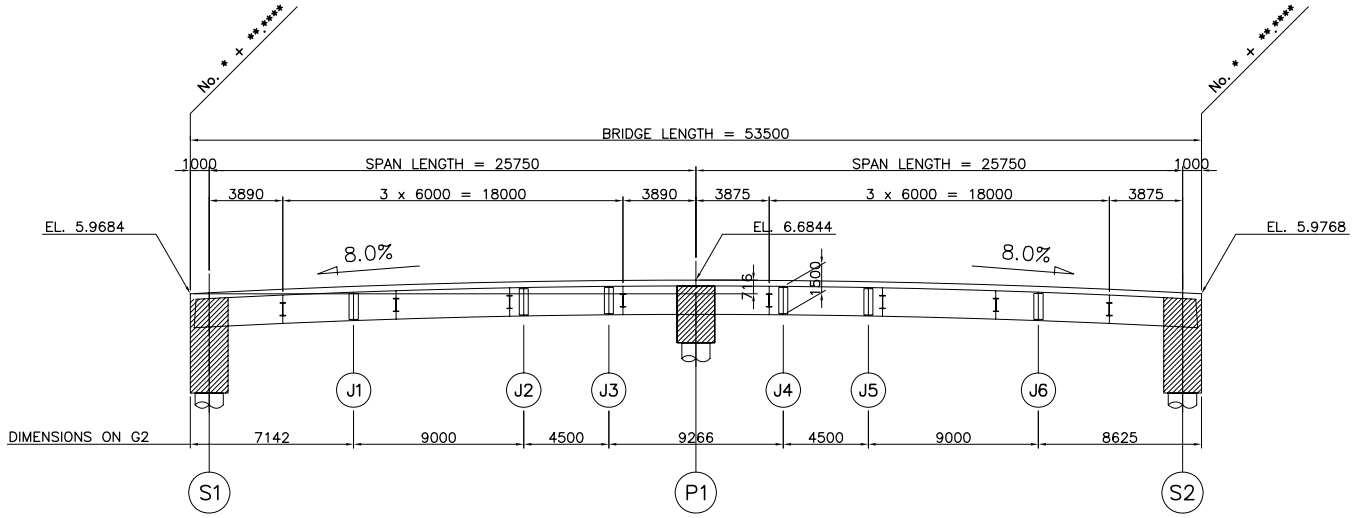

1 - ELEVATION
SCALE 1:200

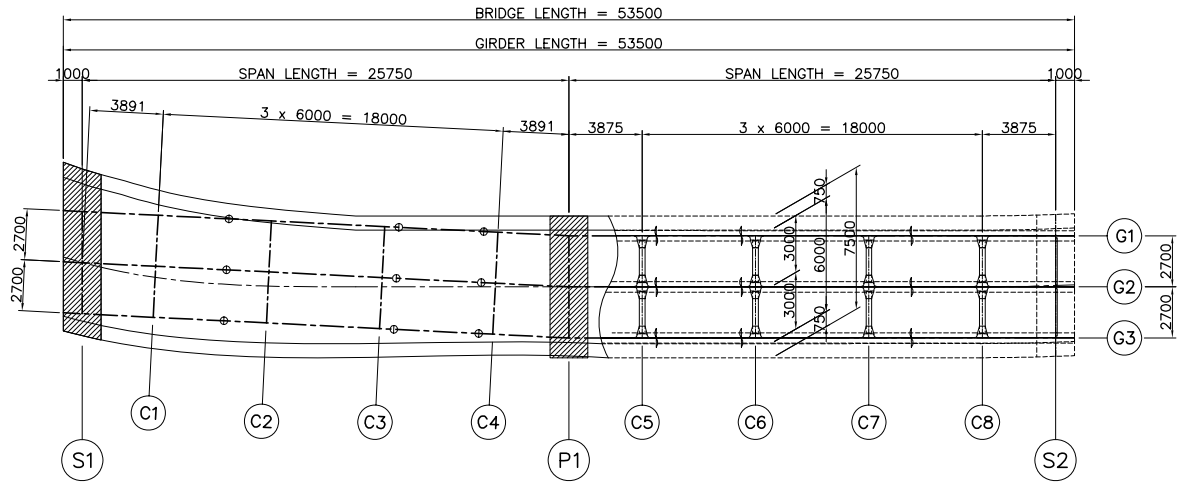

2 - P L A N
SCALE 1:200

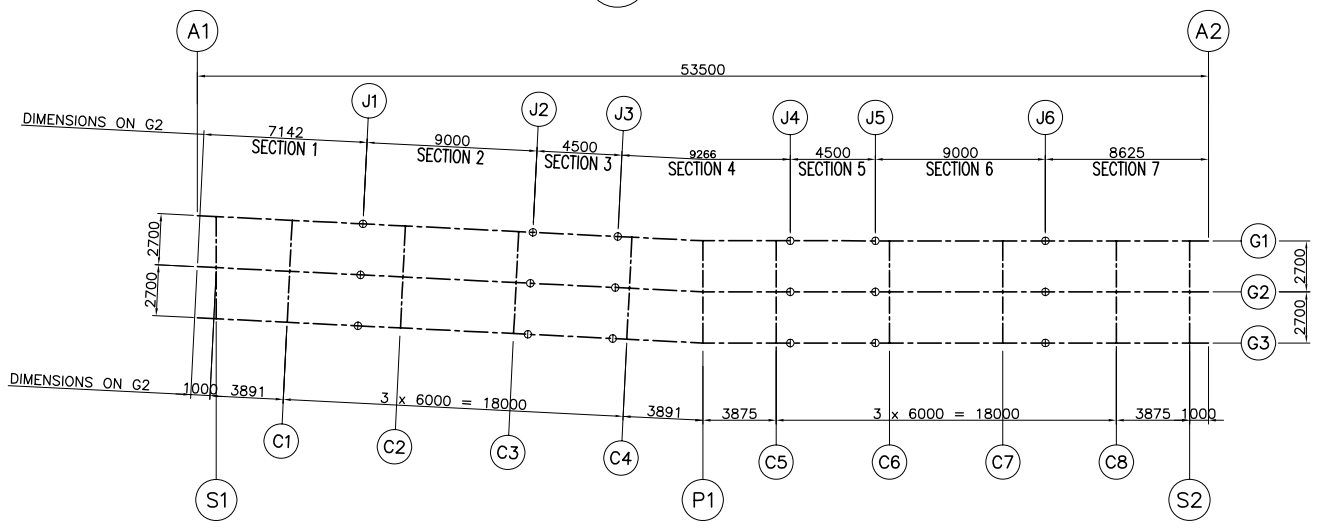

3 - KEY PLAN
SCALE 1:200

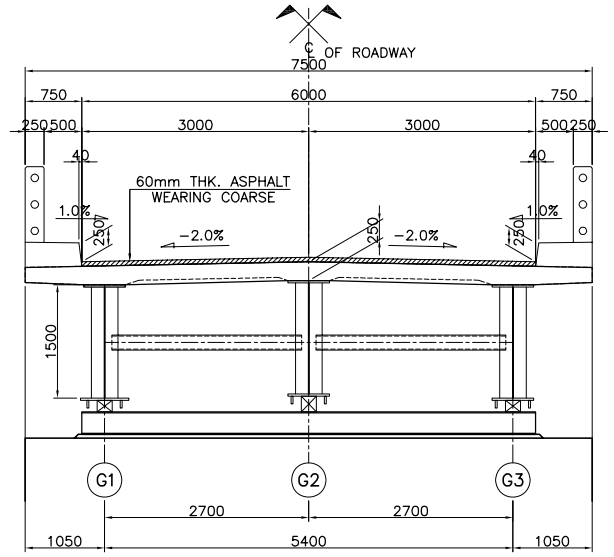

4 - SECTION @ S1, P1, S2
SCALE 1:50

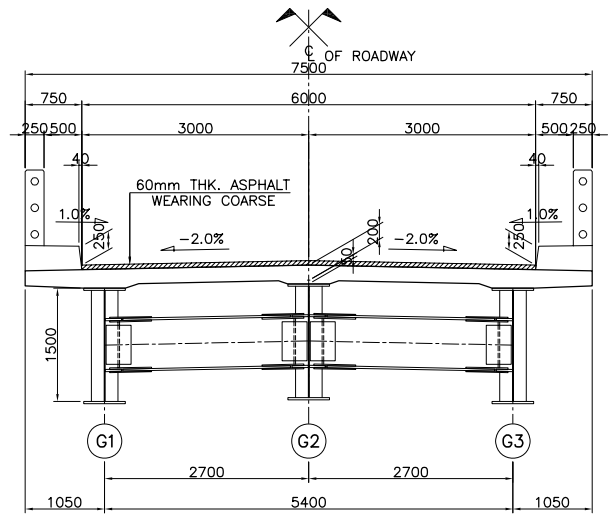

5 - SECTION @ C1~C8
SCALE 1:50

DIRECTORATE GENERAL OF HIGHWAY MINISTRY OF PUBLIC WORKS THE REPUBLIC OF INDONESIA	JICA JAPAN INTERNATIONAL COOPERATION AGENCY	KATAHIRA & ENGINEERS INTERNATIONAL	THE BASIC DESIGN STUDY ON THE PROJECT FOR THE IMPROVEMENT OF BRIDGES IN NIAS ISLAND IN THE REPUBLIC OF INDONESIA	TITLE : SA'UA BRIDGE GEN. DIMENSION OF SUPERSTRUCTURE	SCALE : AS SHOWN	DRAWING No: 6-3

Rev.

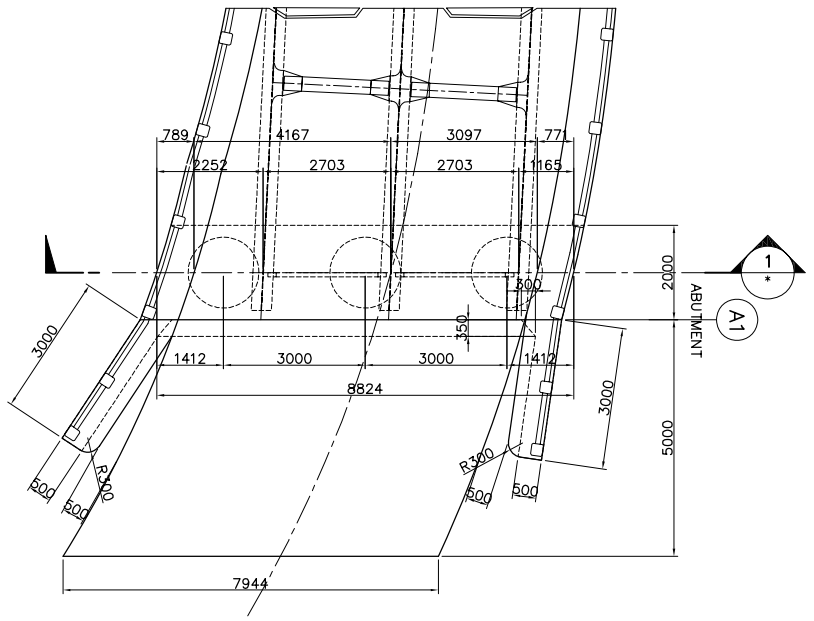

2 - PLAN
SCALE 1:80

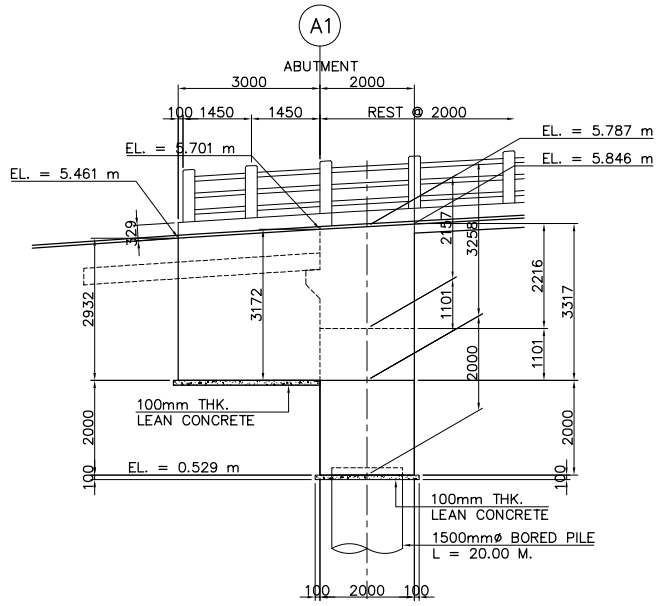

5 - ELEVATION(DOWNTREAM SIDE)
SCALE 1:80

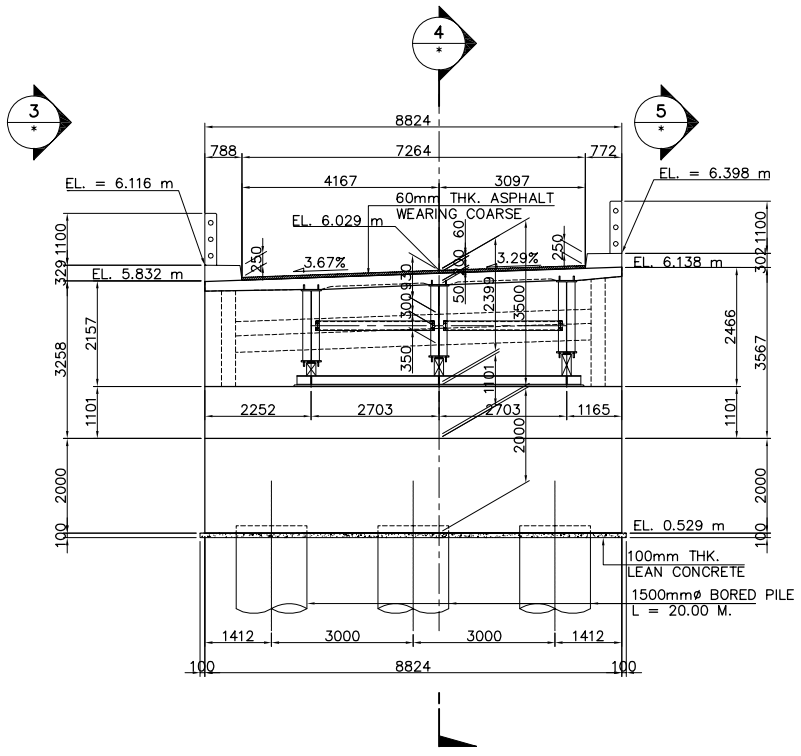

1 - ELEVATION
SCALE 1:80

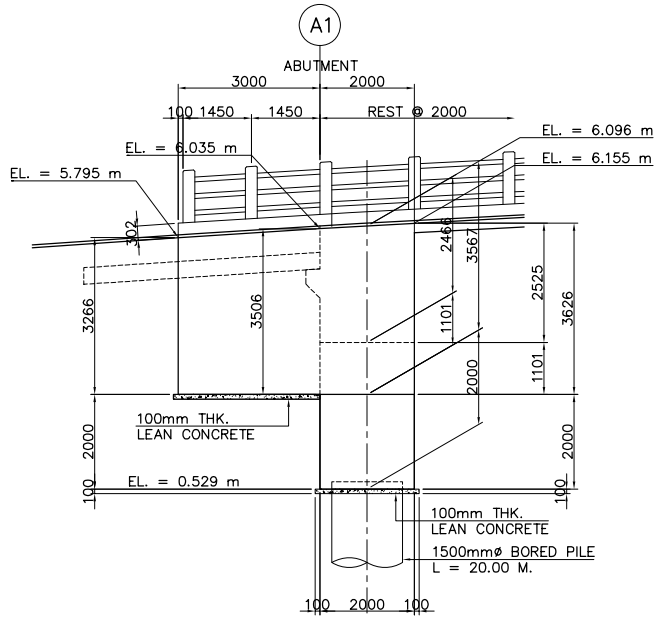

3 - ELEVATION(UPSTREAM SIDE)
SCALE 1:80

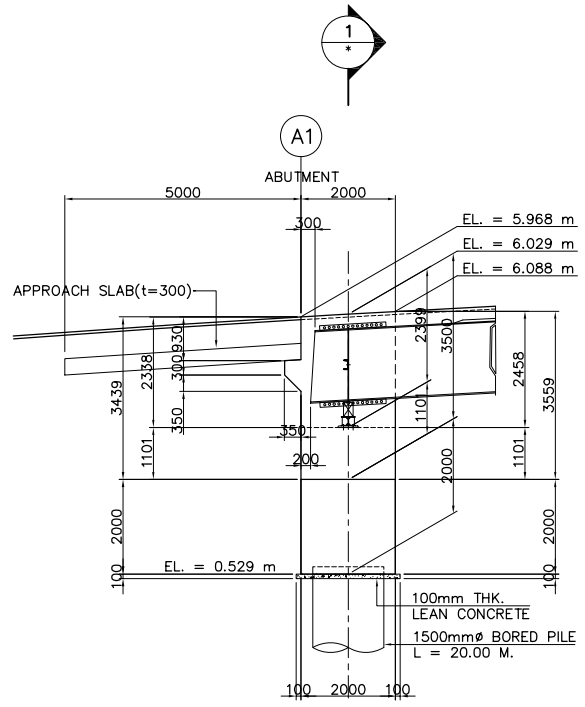

4 - ELEVATION
SCALE 1:80

DIRECTORATE GENERAL OF HIGHWAY MINISTRY OF PUBLIC WORKS THE REPUBLIC OF INDONESIA	JICA JAPAN INTERNATIONAL COOPERATION AGENCY	KATAHIRA & ENGINEERS INTERNATIONAL	THE BASIC DESIGN STUDY ON THE PROJECT FOR THE IMPROVEMENT OF BRIDGES IN NIAS ISLAND IN THE REPUBLIC OF INDONESIA	TITLE : SA'UA BRIDGE SUBSTRUCTURE STRUCTURAL DIMENSION (ABUTMENT A1)	SCALE : AS SHOWN	DRAWING No: 6-4 Rev.

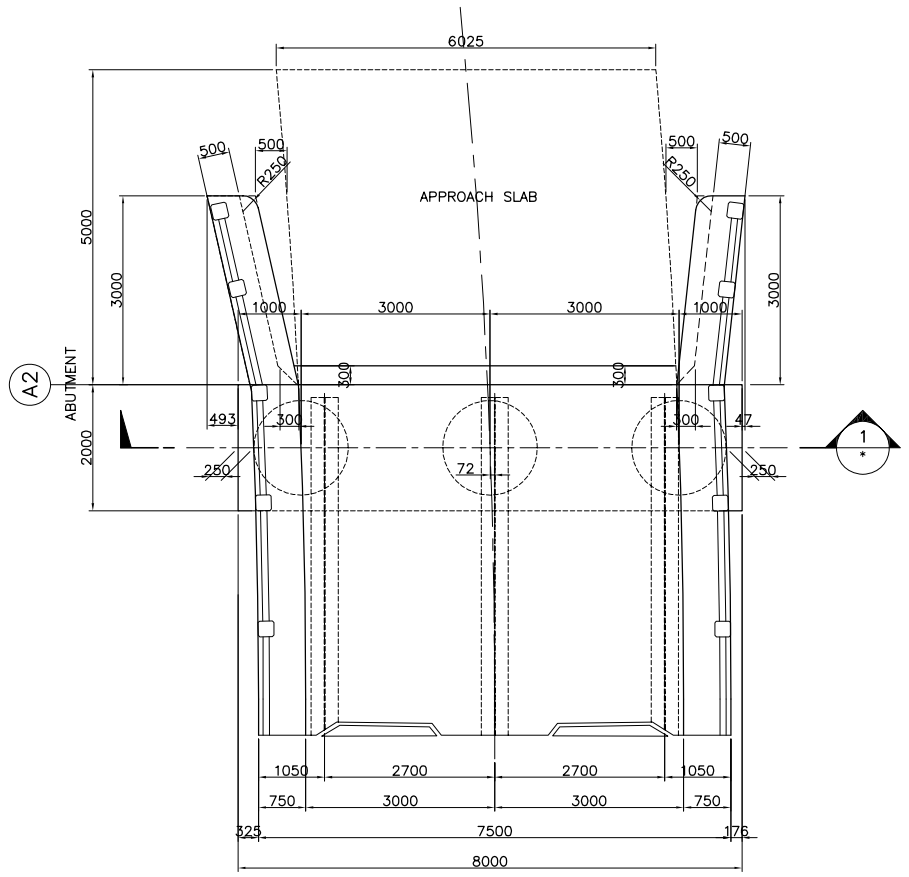

2 - PLAN
SCALE 1:60

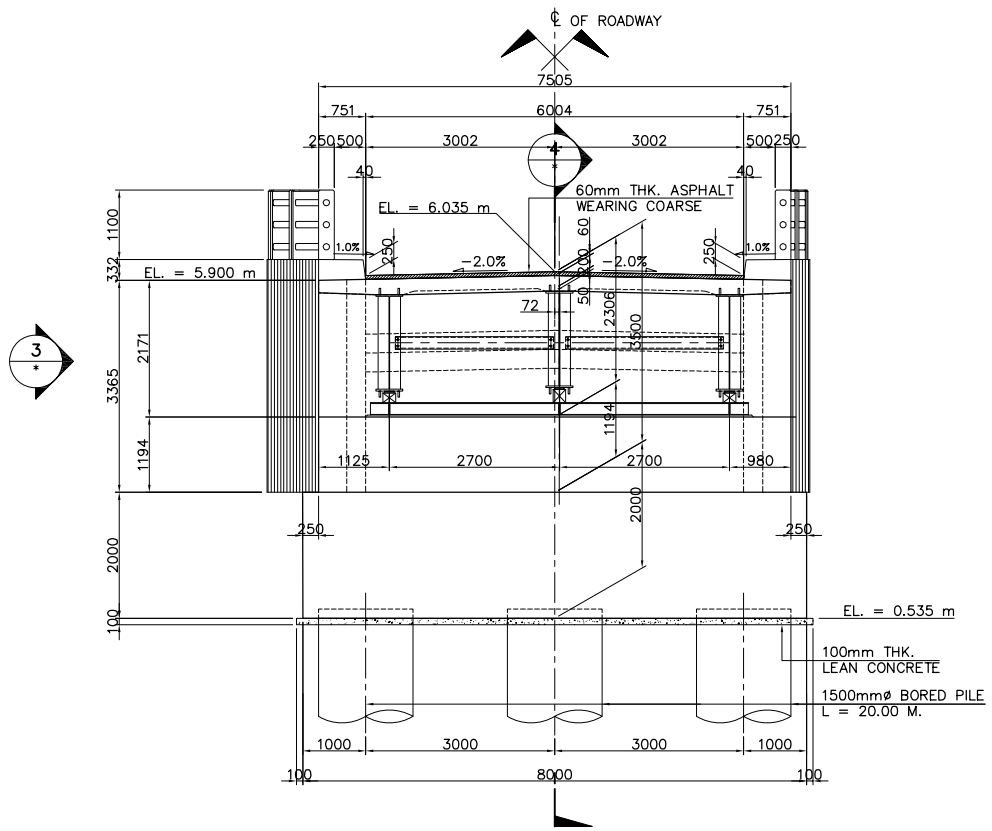

1 - ELEVATION
SCALE 1:60

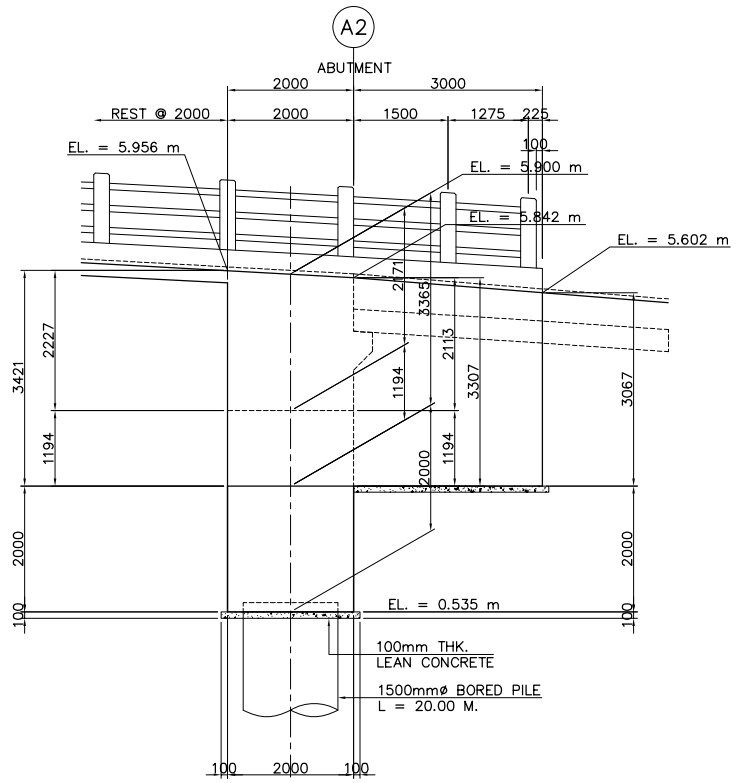

3 - ELEVATION
SCALE 1:60

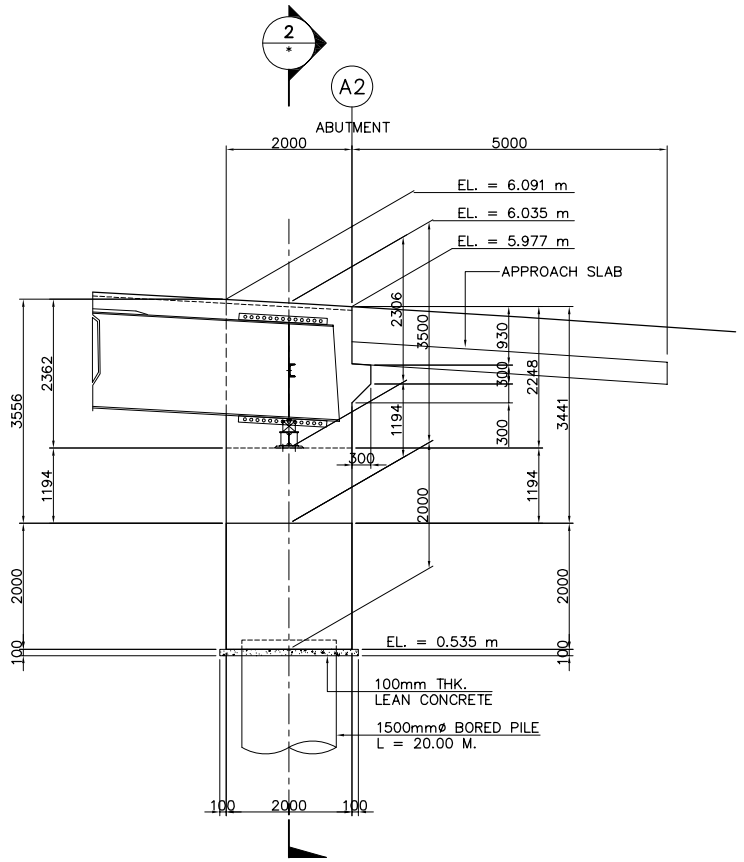

4 - ELEVATION
SCALE 1:60

DIRECTORATE GENERAL OF HIGHWAY MINISTRY OF PUBLIC WORKS THE REPUBLIC OF INDONESIA	JICA JAPAN INTERNATIONAL COOPERATION AGENCY	KATAHIRA & ENGINEERS INTERNATIONAL	THE BASIC DESIGN STUDY ON THE PROJECT FOR THE IMPROVEMENT OF BRIDGES IN NIAS ISLAND IN THE REPUBLIC OF INDONESIA	TITLE : SA'UA BRIDGE SUBSTRUCTURE STRUCTURAL DIMENSION (ABUTMENT A2)	SCALE : AS SHOWN	DRAWING No: 6-5 Rev.

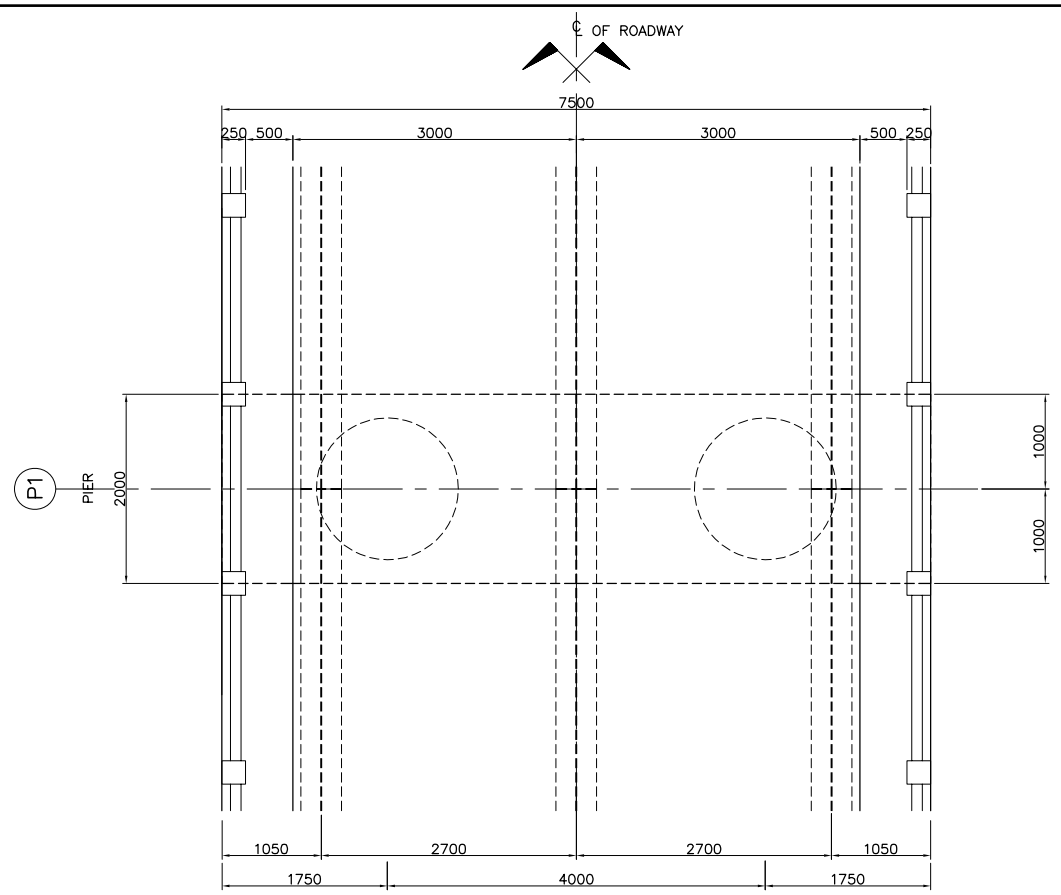

1 - PLAN
SCALE 1:40

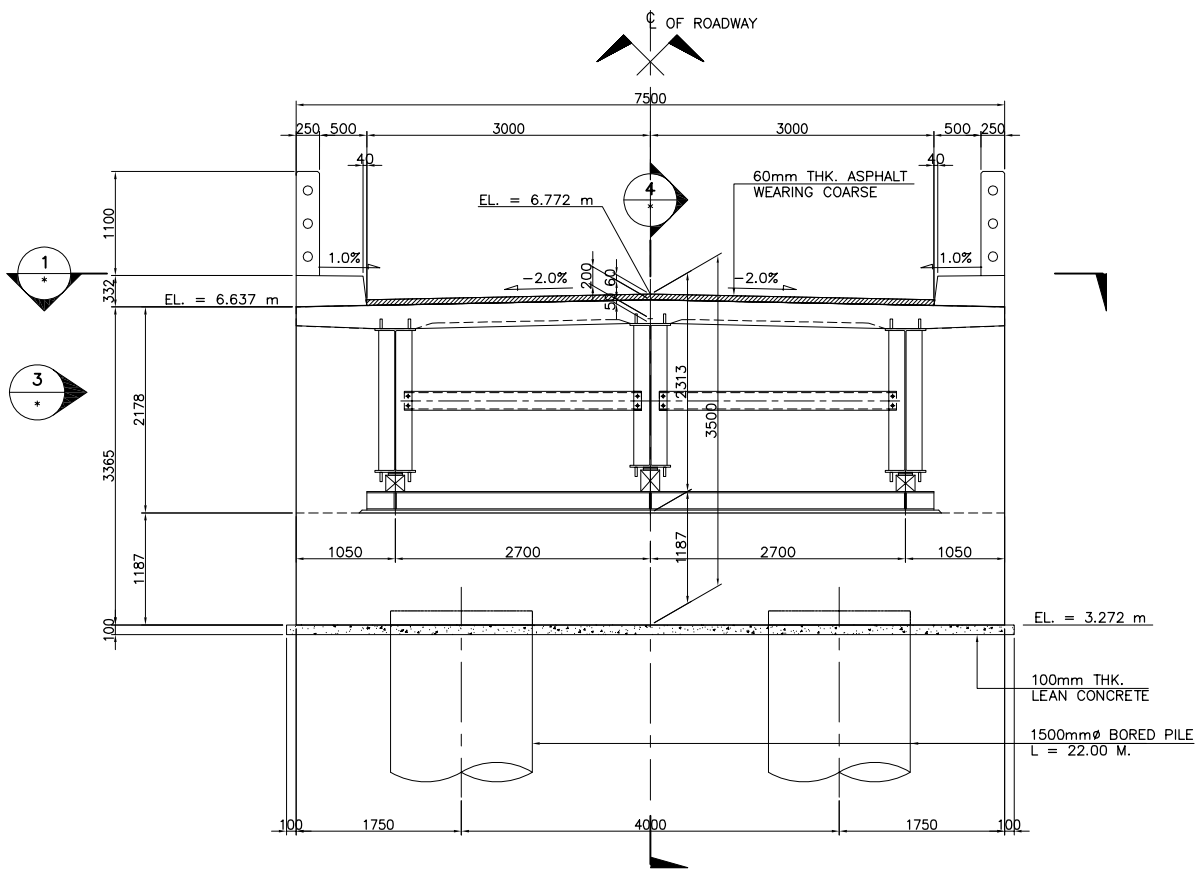

2 - ELEVATION
SCALE 1:40

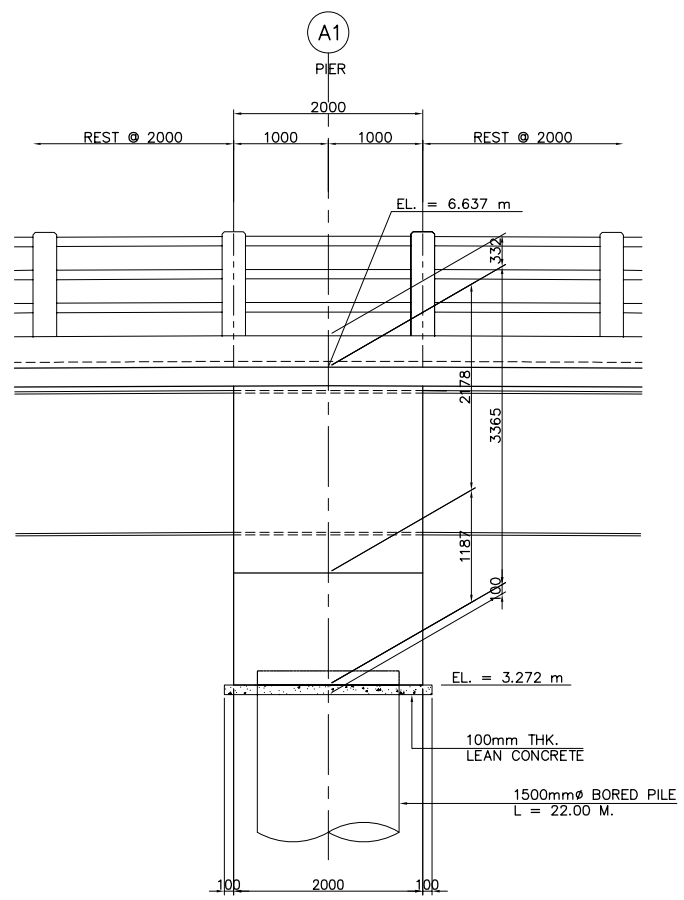

3 - ELEVATION
SCALE 1:40

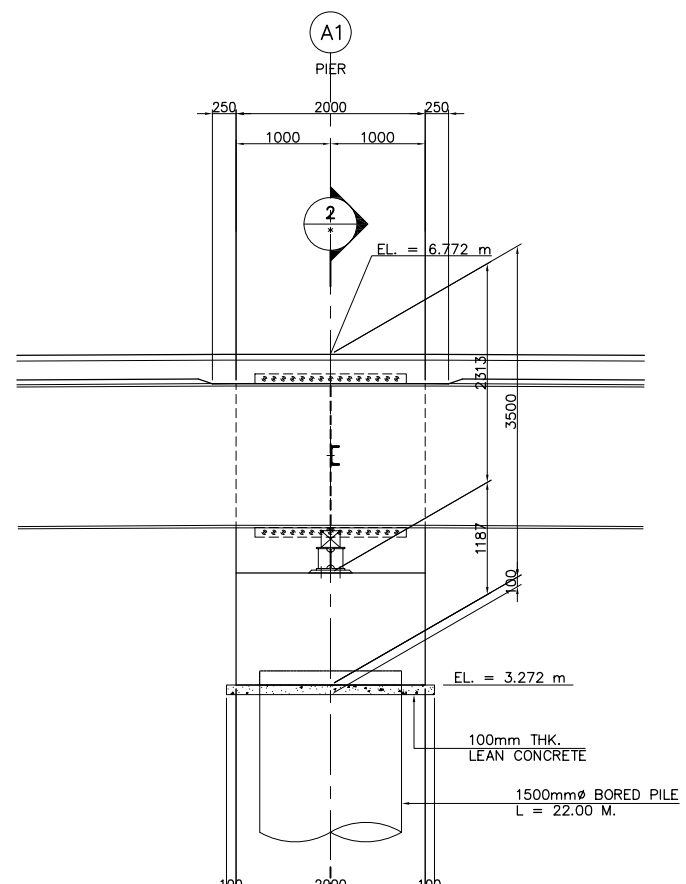

4 - ELEVATION
SCALE 1:40

DIRECTORATE GENERAL OF HIGHWAY MINISTRY OF PUBLIC WORKS THE REPUBLIC OF INDONESIA	JICA JAPAN INTERNATIONAL COOPERATION AGENCY	KATAHIRA & ENGINEERS INTERNATIONAL	THE BASIC DESIGN STUDY ON THE PROJECT FOR THE IMPROVEMENT OF BRIDGES IN NIAS ISLAND IN THE REPUBLIC OF INDONESIA	TITLE : SA'UA BRIDGE SUBSTRUCTURE STRUCTURAL DIMENSION (PIER P1)	SCALE : AS SHOWN	DRAWING No: 6-6 Rev.

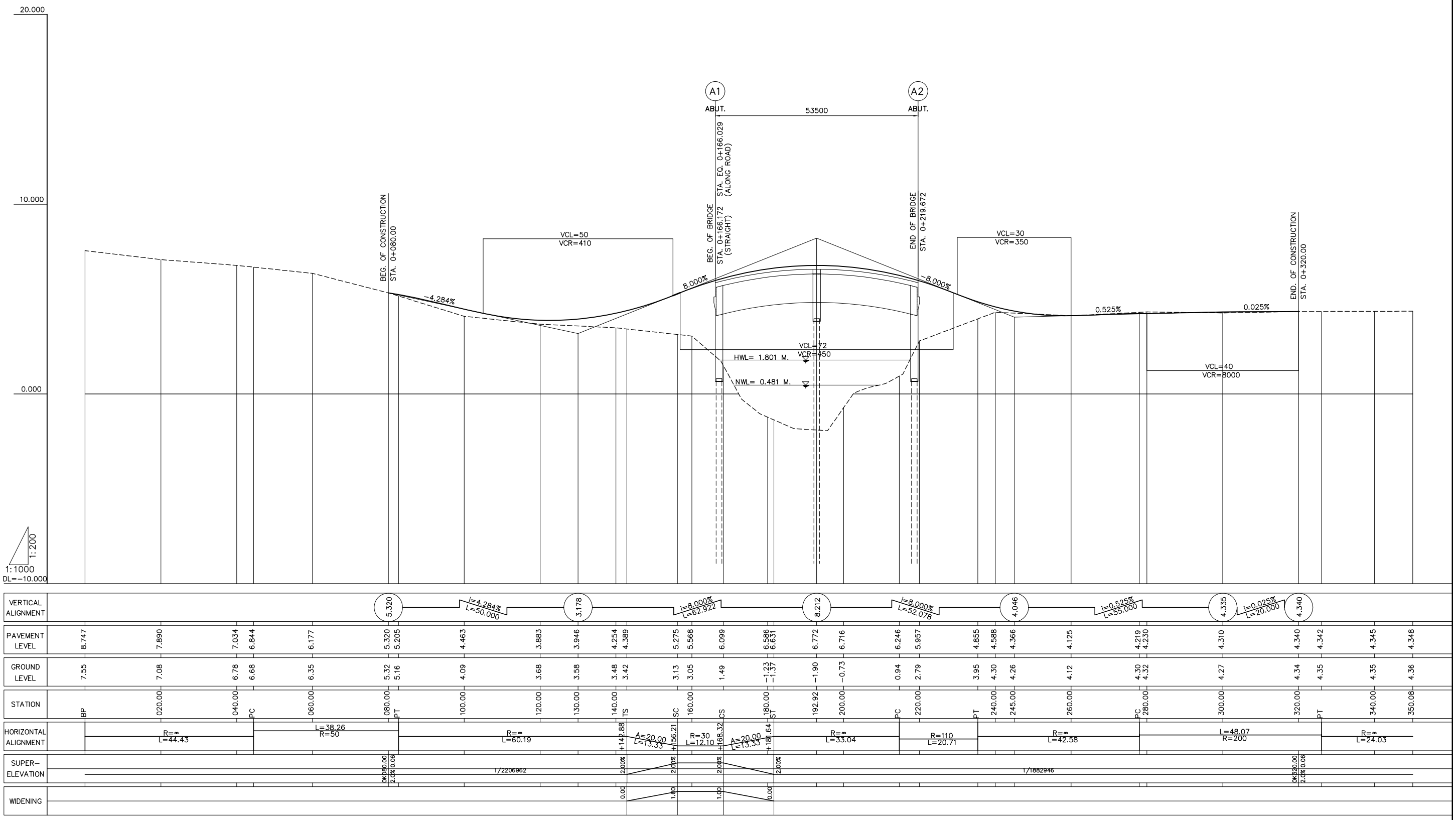

DIRECTORATE GENERAL OF HIGHWAY MINISTRY OF PUBLIC WORKS THE REPUBLIC OF INDONESIA	JICA JAPAN INTERNATIONAL COOPERATION AGENCY	KATAHIRA & ENGINEERS INTERNATIONAL	THE BASIC DESIGN STUDY ON THE PROJECT FOR THE IMPROVEMENT OF BRIDGES IN NIAS ISLAND IN THE REPUBLIC OF INDONESIA	TITLE : SA'UA BRIDGE APPROACH ROAD PROFILE	SCALE : H = 1:1000 V = 1:200	DRAWING No: 6-7 Rev.

NO.0K160.0000
GH=3.05
PH=5.568

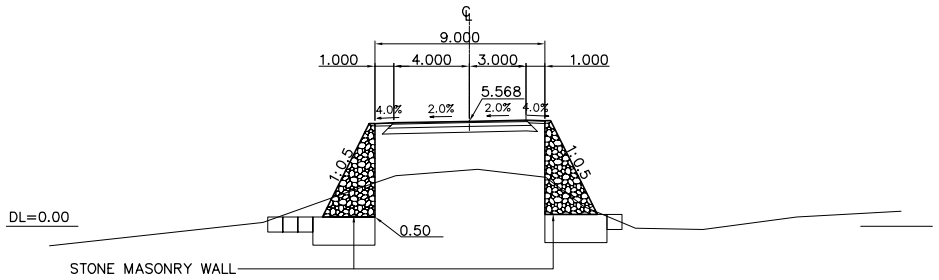

NO.0K140.0000
GH=3.48
PH=4.254

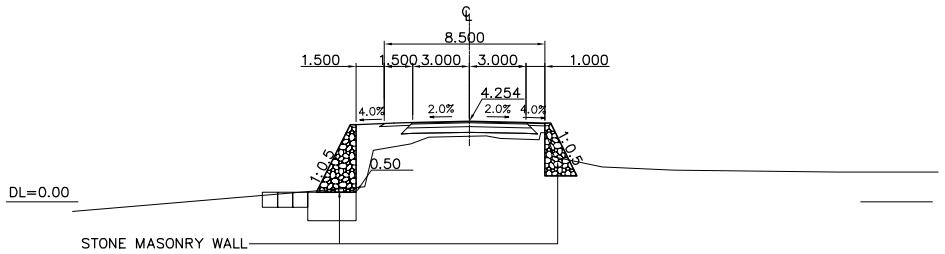

NO.0K120.0000
GH=3.68
PH=3.883

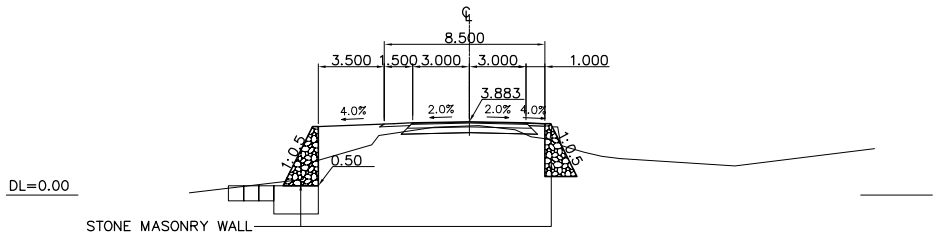

NO.0K100.0000
GH=4.09
PH=4.463

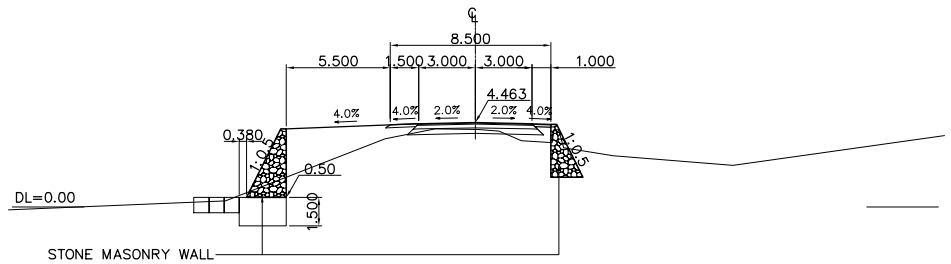

NO.0K080 (BP)
GH=5.32
PH=5.320

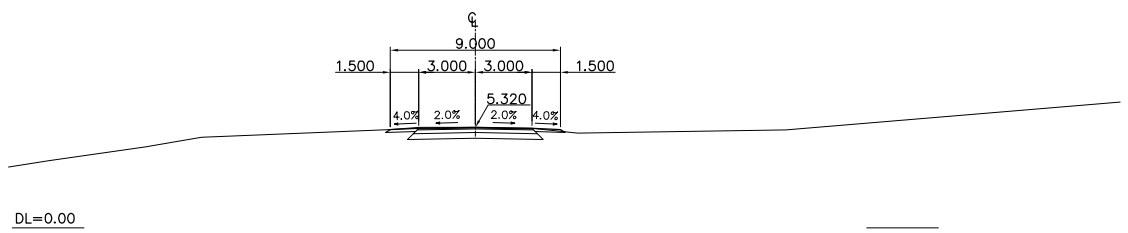

NO.0K320 (EP)
GH=4.34
PH=4.340

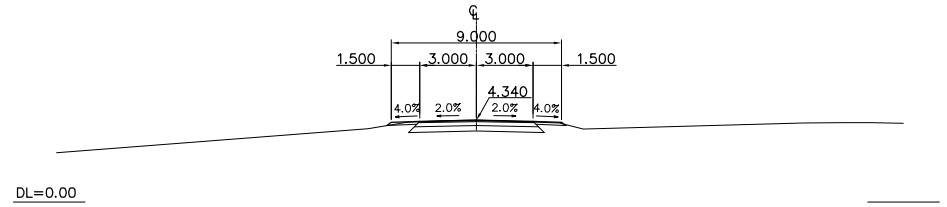

NO.0K300.0000
GH=4.27
PH=4.310

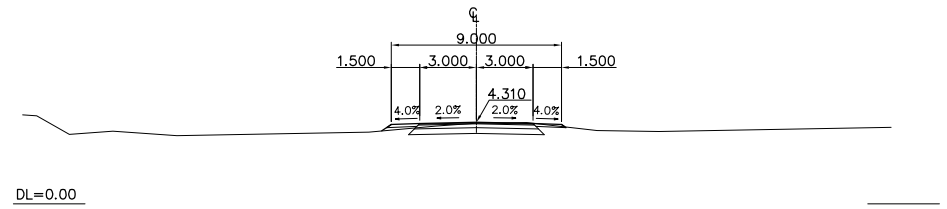

NO.0K280.0000
GH=4.32
PH=4.230

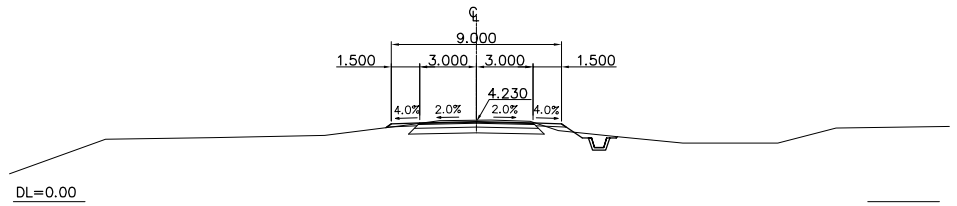

NO.0K260.0000
GH=4.12
PH=4.125

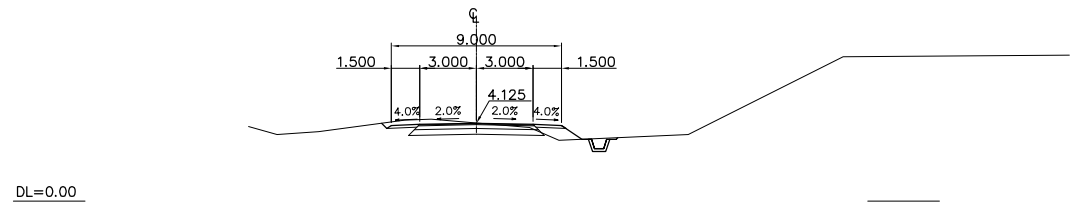

NO.0K240.0000
GH=4.30
PH=4.588

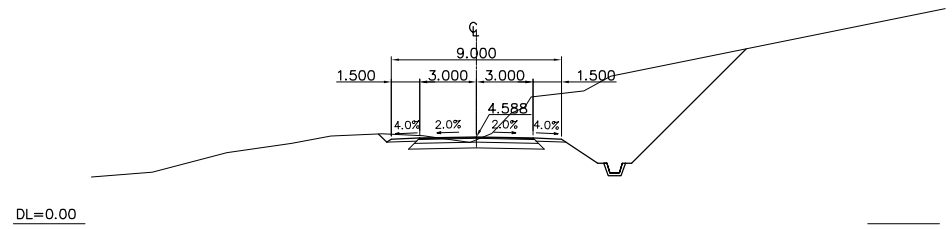

NO.0K225
GH=4.10
PH=6.610

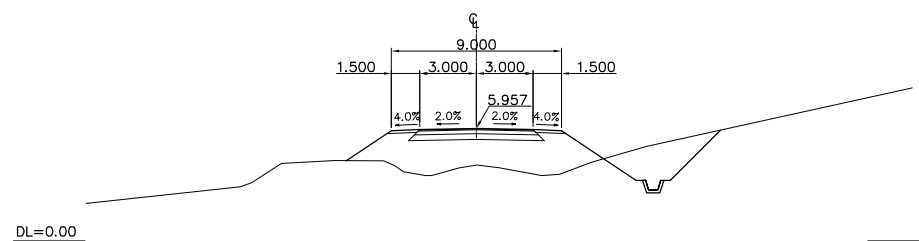

DIRECTORATE GENERAL OF HIGHWAY MINISTRY OF PUBLIC WORKS THE REPUBLIC OF INDONESIA	JICA JAPAN INTERNATIONAL COOPERATION AGENCY	KEI KATAHIRA & ENGINEERS INTERNATIONAL	THE BASIC DESIGN STUDY ON THE PROJECT FOR THE IMPROVEMENT OF BRIDGES IN NIAS ISLAND IN THE REPUBLIC OF INDONESIA	TITLE : SA'UA BRIDGE APPROACH ROAD CROSS SECTIONS	SCALE : 1 : 400	DRAWING No: 6-8

Rev.

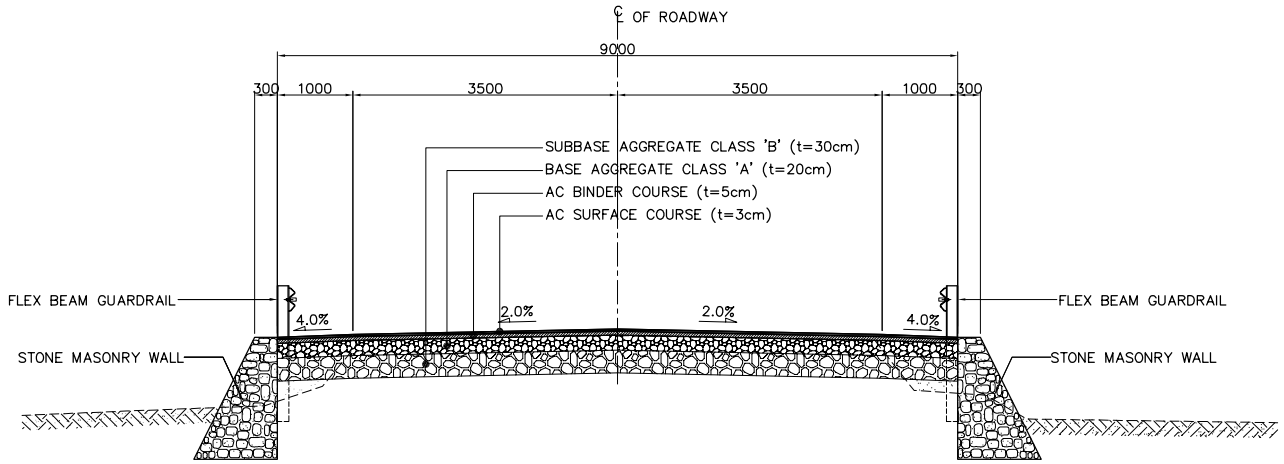

1 / - NOU BRIDGE APPROACH ROAD
SCALE 1:100

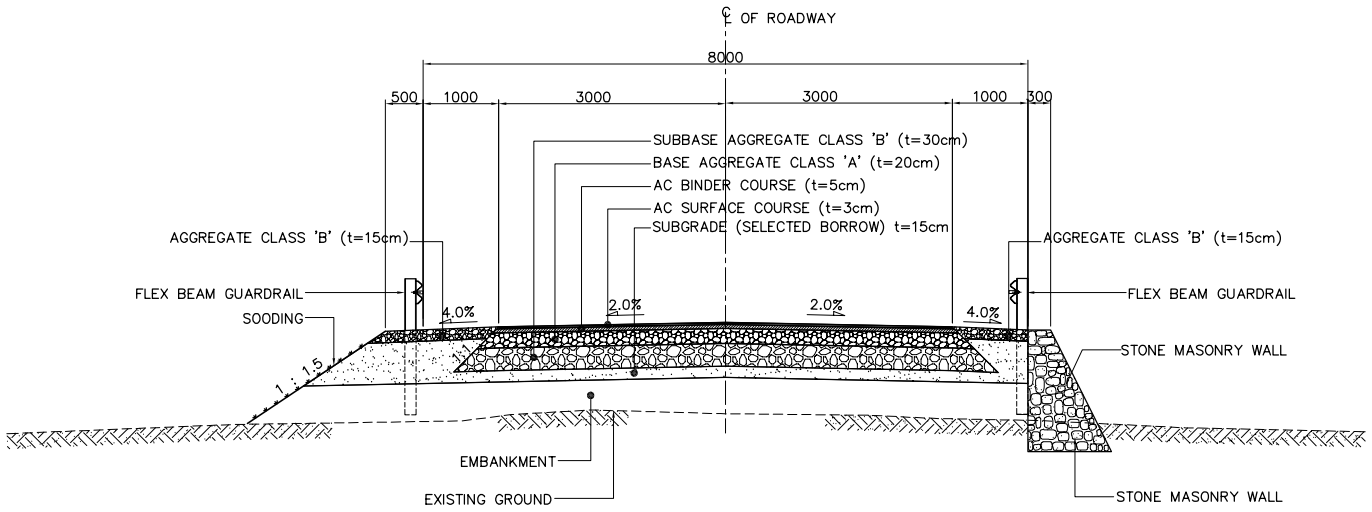

2 / - OTHER APPROACH ROAD
SCALE 1:100

DIRECTORATE GENERAL OF HIGHWAY MINISTRY OF PUBLIC WORKS THE REPUBLIC OF INDONESIA	JICA JAPAN INTERNATIONAL COOPERATION AGENCY	KATAHIRA & ENGINEERS INTERNATIONAL	THE BASIC DESIGN STUDY ON THE PROJECT FOR THE IMPROVEMENT OF BRIDGES IN NIAS ISLAND IN THE REPUBLIC OF INDONESIA	TITLE : TYPICAL CROSS SECTIONS OF BRIDGE APPROACH ROAD	SCALE : AS SHOWN	DRAWING No: 7-1

Rev.

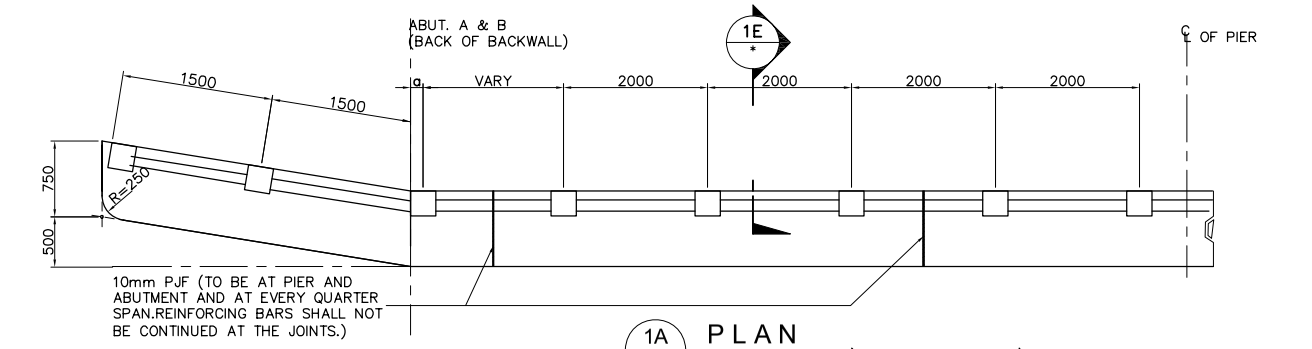

1A PLAN
N T S

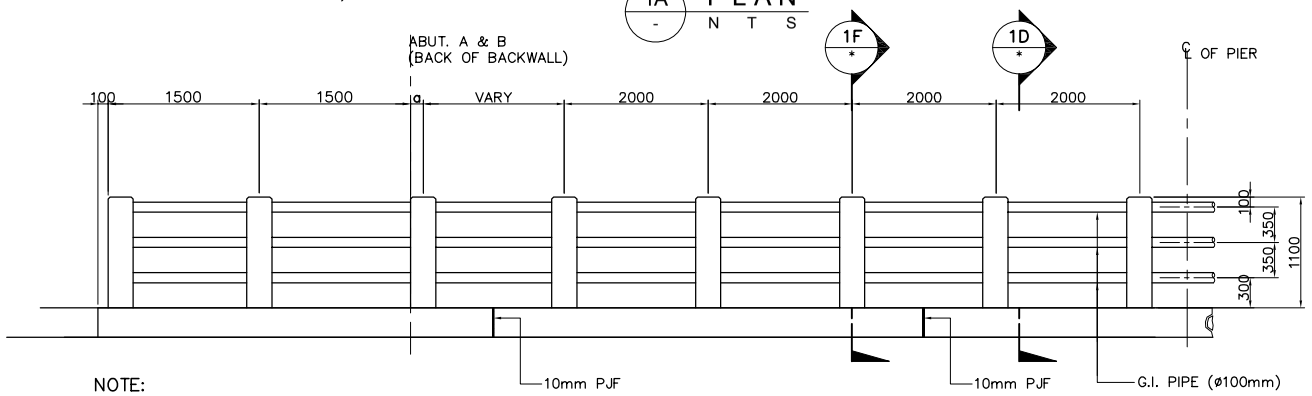

NOTE:
PJF SHALL BE LOCATED AT EVVERY 1/4 OF TOTAL SPAN LENGTH OF THE BRIDGE.

1B ELEVATION
N T S

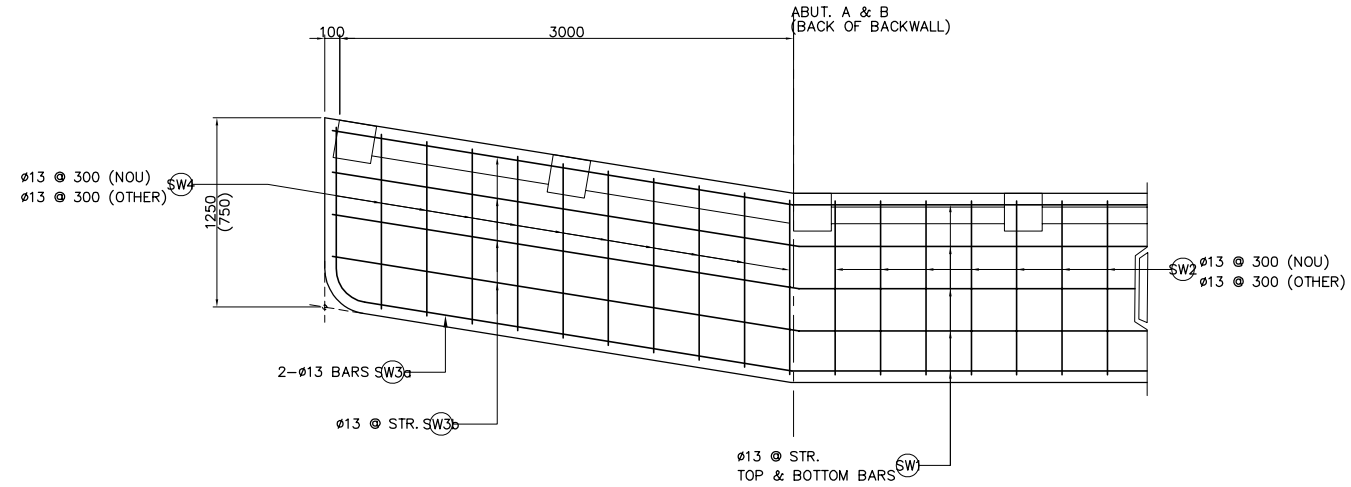

1G SIDEWALK PART PLAN DETAIL
SCALE 1 : 50

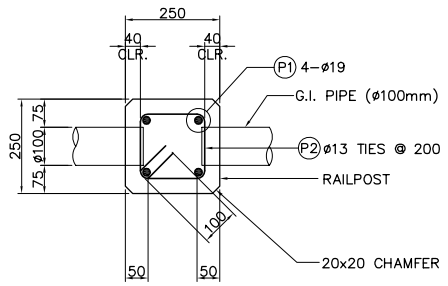

1C SECTION
SCALE 1:10

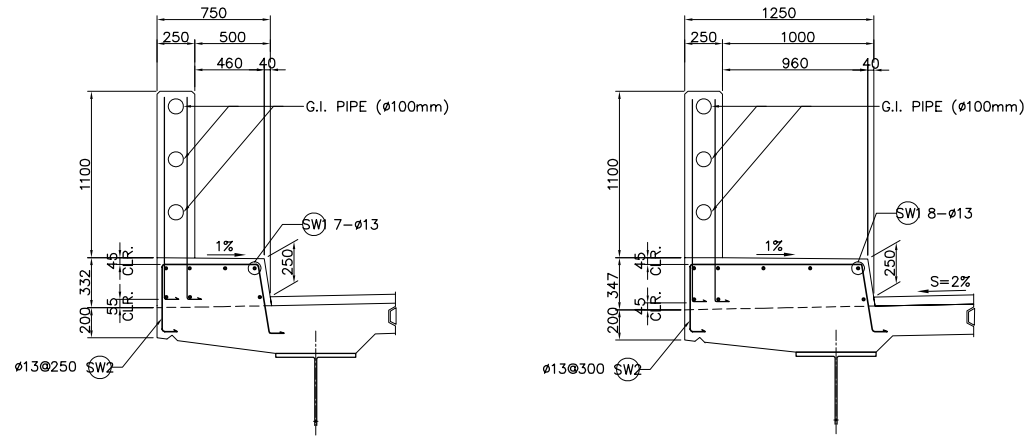

1E SIDEWALK SECTION
SCALE 1:50

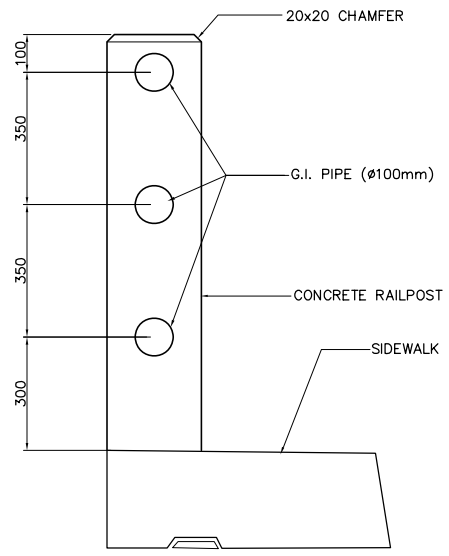

1D SECTION
SCALE 1:10

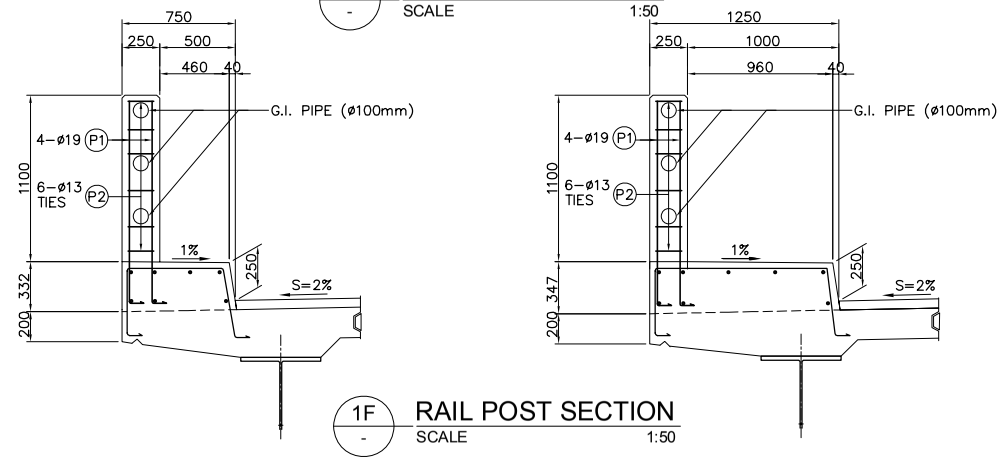

1F RAIL POST SECTION
SCALE 1:50

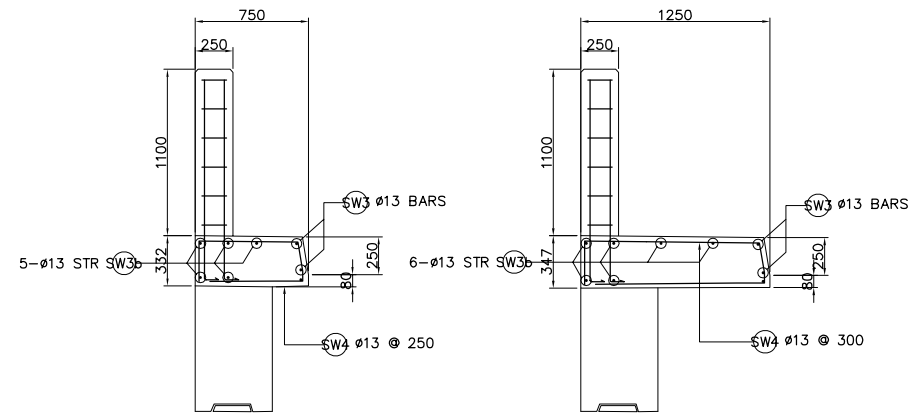

1H APPROACH RAIL SECTION
SCALE 1:50

1 TYPICAL RAILING AND SIDEWALK DETAILS
SCALE AS SHOWN

DIRECTORATE GENERAL OF HIGHWAY MINISTRY OF PUBLIC WORKS THE REPUBLIC OF INDONESIA	JICA JAPAN INTERNATIONAL COOPERATION AGENCY	KATAHIRA & ENGINEERS INTERNATIONAL	THE BASIC DESIGN STUDY ON THE PROJECT FOR THE IMPROVEMENT OF BRIDGES IN NIAS ISLAND IN THE REPUBLIC OF INDONESIA	TITLE : TYPICAL BRIDGE RAILING AND SIDEWALK DETAILS (1 OF 2)	SCALE : AS SHOWN	DRAWING No: 7-2 Rev.

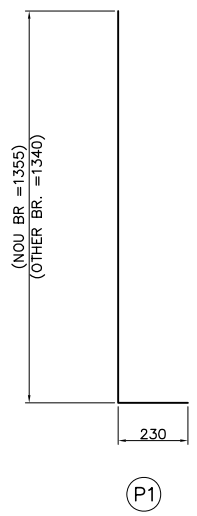

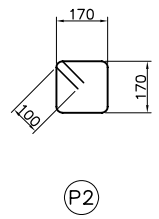

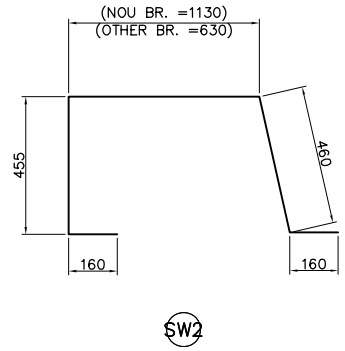

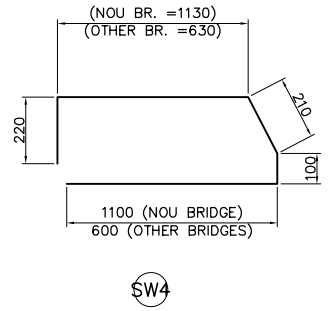

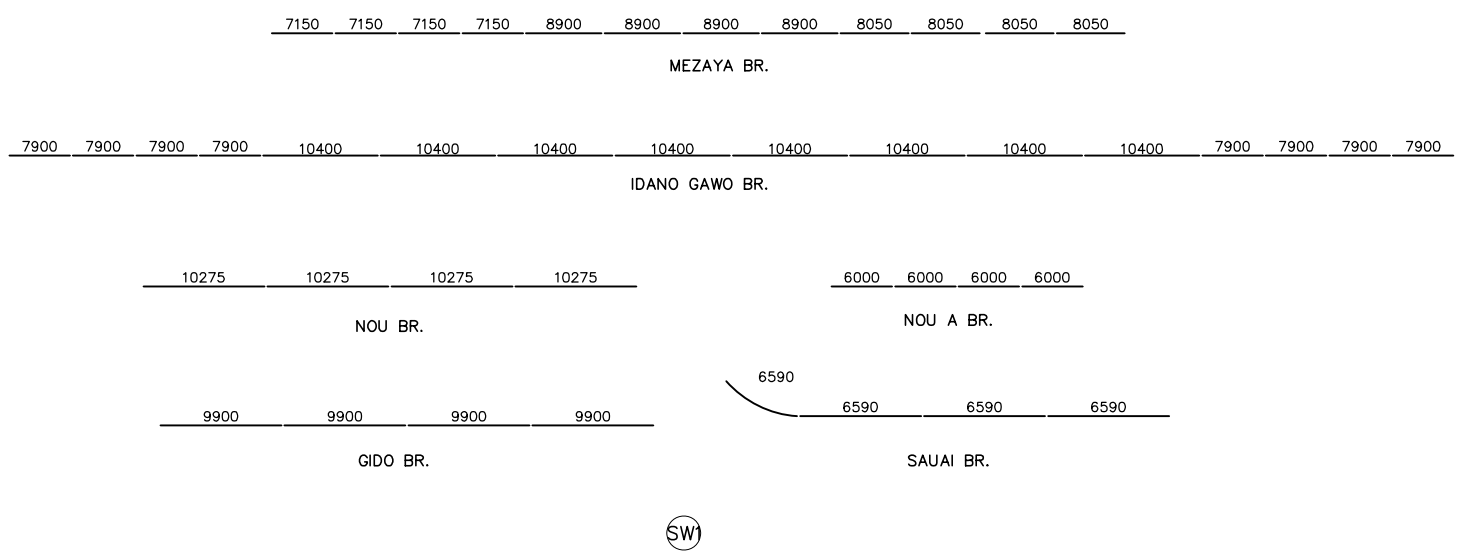

LAP SPLICE = 35 x BAR ø

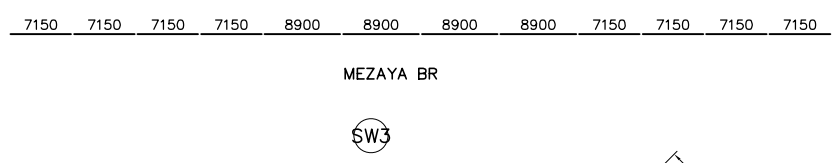

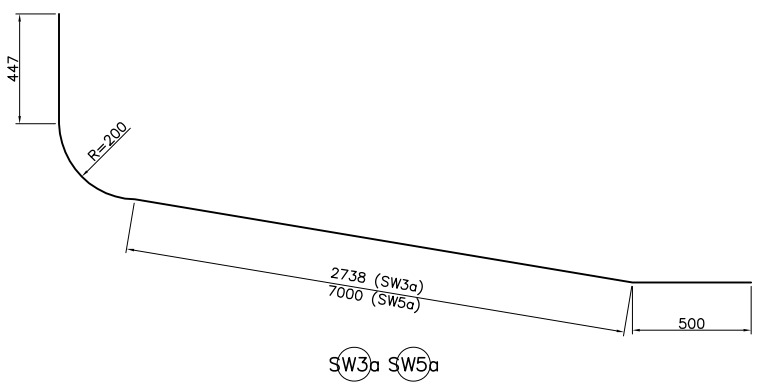

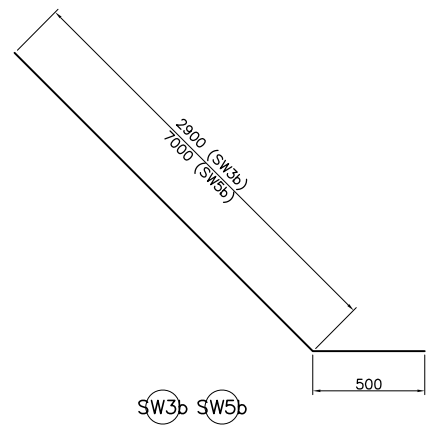

1 - BAR BENDING DIAGRAM
NOT TO SCALE

NOU BRIDGE

SCHEDULE OF REINFORCEMENT

BAR MARK	BAR SIZE	BAR LENGTH	QTY.	UNIT WT.	WT, PER BAR	TOTAL WT.
RAIL POST						
P1	19	1.585	208	2.226	3.52	734.24
P2	13	0.880	312	1.042	0.92	287.04
SIDEWALK						
SW1	13	39.600	16	1.042	41.26	660.16
SW2	13	2.365	288	1.042	2.34	708.48
APPROACH SIDEWALK						
SW3a	13	4.000	8	1.042	4.17	33.36
SW3b	13	3.400	24	1.042	3.54	84.96
SW4	13	2.76	52	1.042	2.88	149.76

TOTAL = 2658.00Kgs

NOU A BRIDGE

SCHEDULE OF REINFORCEMENT

BAR MARK	BAR SIZE	BAR LENGTH	QTY.	UNIT WT.	WT, PER BAR	TOTAL WT.
RAIL POST						
P1	19	1.570	240	2.226	3.49	837.60
P2	13	0.880	360	1.042	0.92	331.20
SIDEWALK						
SW1	13	48.000	14	1.042	50.02	700.28
SW2	13	1.865	400	1.042	1.94	776.00
APPROACH SIDEWALK						
SW3a	13	4.000	8	1.042	4.17	33.36
SW3b	13	3.400	20	1.042	3.54	70.80
SW4	13	1.76	52	1.042	1.83	95.16

TOTAL = 2844.40Kgs

GIDO BRIDGE

SCHEDULE OF REINFORCEMENT

BAR MARK	BAR SIZE	BAR LENGTH	QTY.	UNIT WT.	WT, PER BAR	TOTAL WT.
RAIL POST						
P1	19	1.570	208	2.226	3.49	725.92
P2	13	0.880	312	1.042	0.92	287.04
SIDEWALK						
SW1	13	39.600	14	1.042	41.26	577.64
SW2	13	1.865	328	1.042	1.94	636.32
APPROACH SIDEWALK						
SW3a	13	4.000	8	1.042	4.17	33.36
SW3b	13	3.400	20	1.042	3.54	70.80
SW4	13	1.76	52	1.042	1.83	95.16

TOTAL = 2426.24Kgs

IDANO GAWO BRIDGE

SCHEDULE OF REINFORCEMENT

BAR MARK	BAR SIZE	BAR LENGTH	QTY.	UNIT WT.	WT, PER BAR	TOTAL WT.
RAIL POST						
P1	19	1.570	632	2.226	3.49	2205.68
P2	13	0.880	948	1.042	0.92	872.16
SIDEWALK						
SW1	13	146.400	14	1.042	152.55	2135.70
SW2	13	1.865	1216	1.042	1.94	2359.04
APPROACH SIDEWALK						
SW3a	13	4.000	4	1.042	4.17	16.68
SW3b	13	3.400	10	1.042	3.54	35.40
SW4	13	1.76	26	1.042	1.83	47.58

TOTAL = 7672.24Kgs

MEZAYA BRIDGE

SCHEDULE OF REINFORCEMENT

BAR MARK	BAR SIZE	BAR LENGTH	QTY.	UNIT WT.	WT, PER BAR	TOTAL WT.
RAIL POST						
P1	19	1.570	424	2.226	3.49	1479.76
P2	13	0.880	636	1.042	0.92	585.12
SIDEWALK						
SW1	13	96.400	7	1.042	100.45	703.15
SW2	13	1.865	792	1.042	1.94	1536.48
SW3	13	92.800	7	1.042	96.70	676.90
APPROACH SIDEWALK						
SW3a	13	4.000	6	1.042	4.17	25.02
SW3b	13	3.400	15	1.042	3.54	53.10
SW4	13	1.76	63	1.042	1.83	115.29
SW5a	13	8.261	2	1.042	8.61	17.22
SW5b	13	7.5	5	1.042	7.82	39.10

TOTAL = 5231.14Kgs

SAUAI BRIDGE

SCHEDULE OF REINFORCEMENT

BAR MARK	BAR SIZE	BAR LENGTH	QTY.	UNIT WT.	WT, PER BAR	TOTAL WT.
RAIL POST						
P1	19	1.570	256	2.226	3.49	893.44
P2	13	0.880	384	1.042	0.92	353.28
SIDEWALK						
SW1	13	52.960	14	1.042	55.18	775.52
SW2	13	1.865	448	1.042	1.94	869.12
APPROACH SIDEWALK						
SW3a	13	4.000	8	1.042	4.17	33.36
SW3b	13	3.40	20	1.042	3.54	70.80
SW4	13	1.76	52	1.042	1.83	95.16

TOTAL = 3087.68Kgs

DIRECTORATE GENERAL OF HIGHWAY MINISTRY OF PUBLIC WORKS THE REPUBLIC OF INDONESIA	JICA JAPAN INTERNATIONAL COOPERATION AGENCY	KATAHIRA & ENGINEERS INTERNATIONAL	THE BASIC DESIGN STUDY ON THE PROJECT FOR THE IMPROVEMENT OF BRIDGES IN NIAS ISLAND IN THE REPUBLIC OF INDONESIA	TITLE : TYPICAL BRIDGE RAILING AND SIDEWALK DETAILS (2 OF 2)	SCALE : AS SHOWN	DRAWING No: 7-3 Rev.

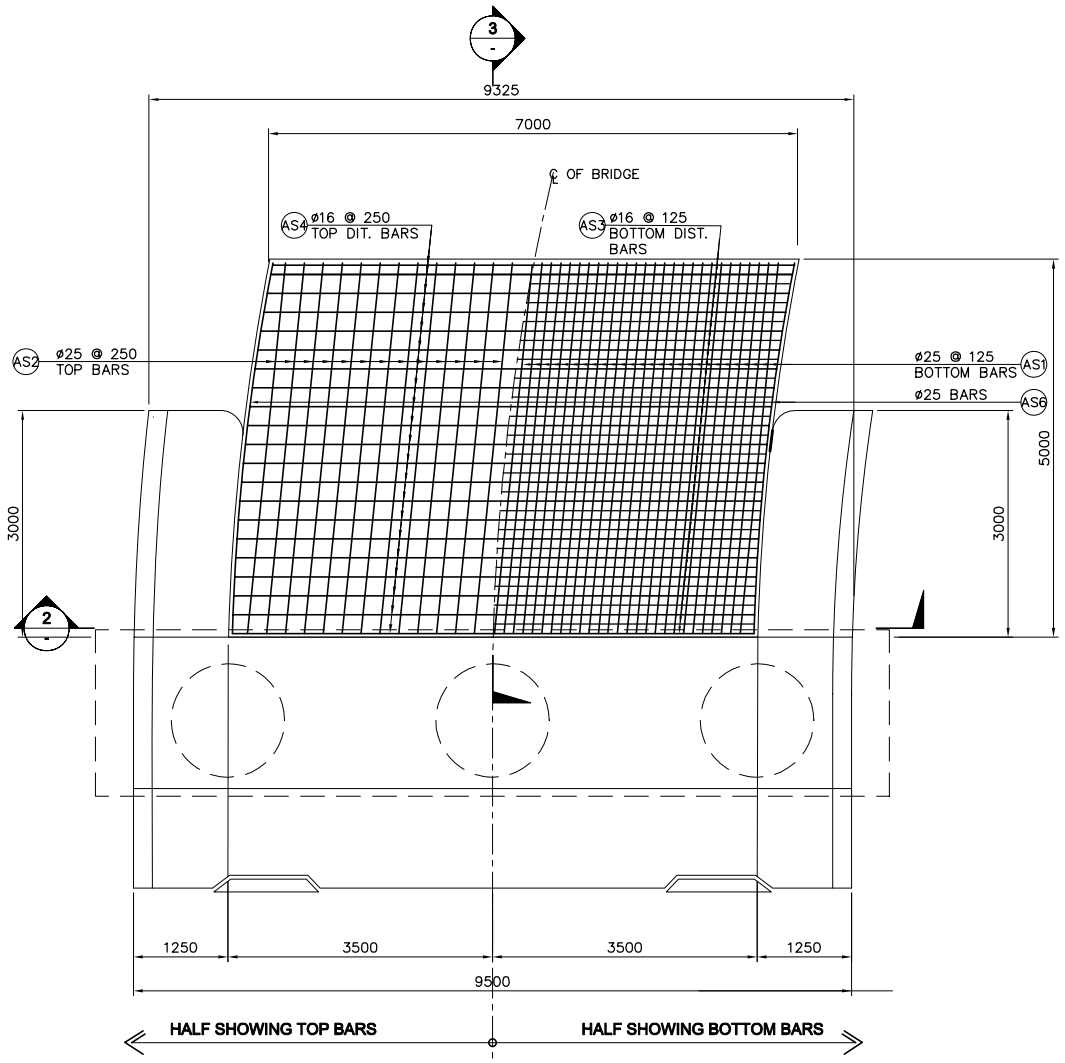

1 - PLAN
SCALE 1:100

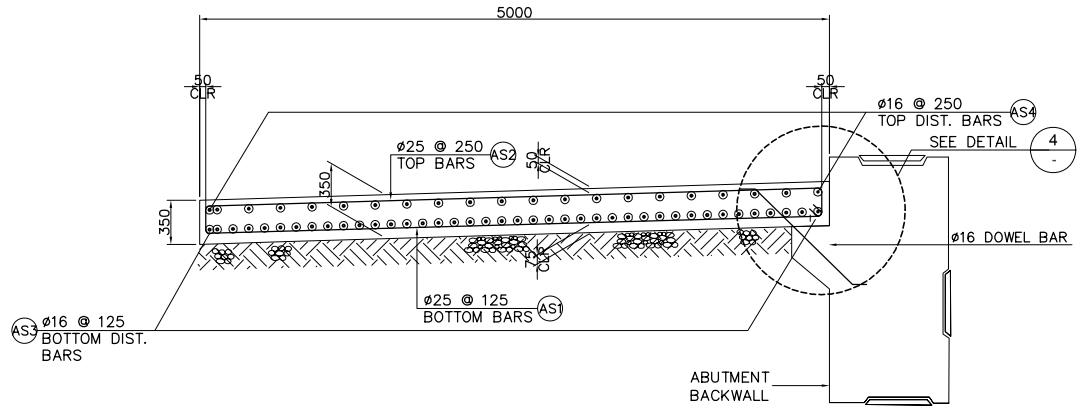

3 - SECTION
SCALE 1:60

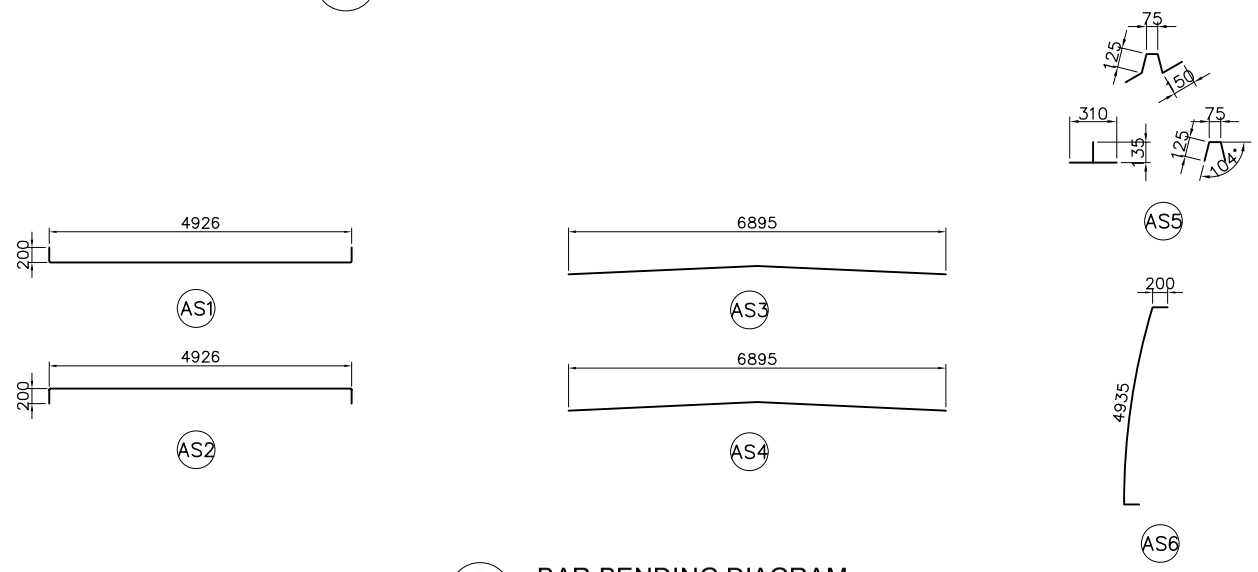

5 - BAR BENDING DIAGRAM
NOT TO SCALE

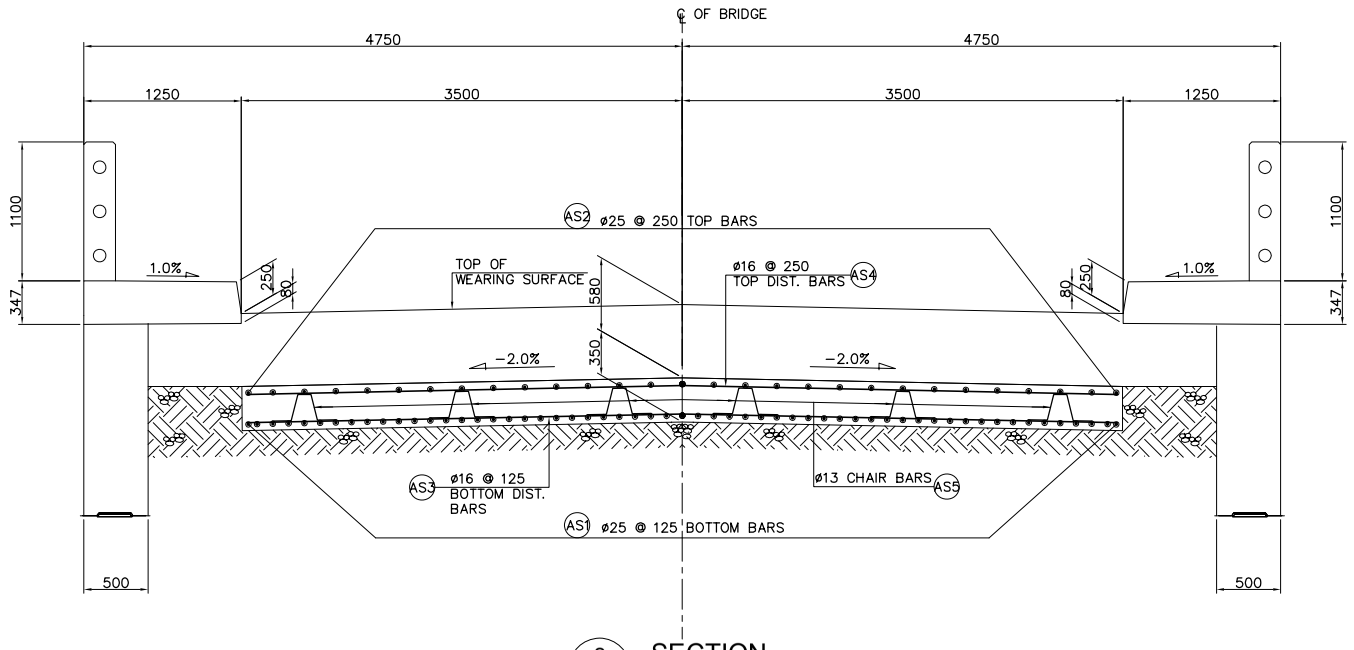

2 - SECTION
SCALE 1:60

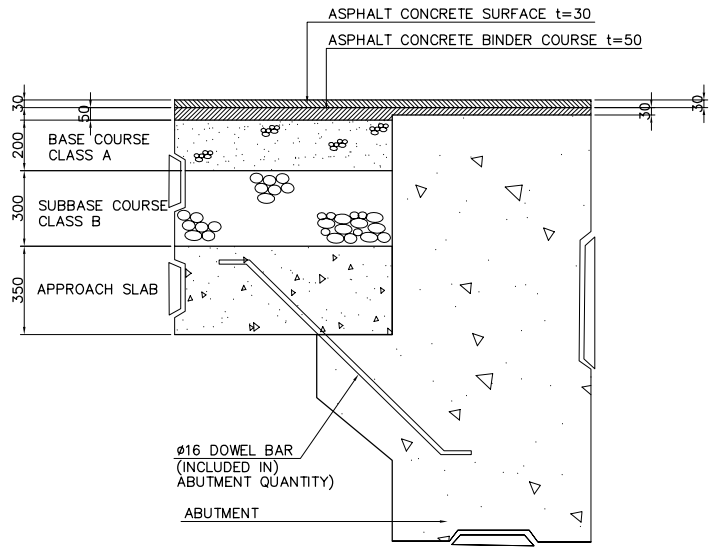

4 - DETAIL
SCALE 1:30

SCHEDULE OF REINFORCEMENT

BAR MARK	BAR SIZE	BAR LENGTH	QTY.	UNIT WT.	WT. PER BAR	TOTAL WT.
AS1	D−25	5.326	54	3.853	20.52	1108.08
AS2	D−25	5.326	27	3.853	20.52	554.04
AS3	D−16	6.895	41	1.578	10.88	446.08
AS4	D−16	6.895	21	1.578	10.88	228.48
AS5	D−13	0.625	24	1.042	0.65	15.60
AS6	D−25	5.335	4	3.853	20.56	82.24

SD−40 TOTAL =2434.52 Kgs

DIRECTORATE GENERAL OF HIGHWAY MINISTRY OF PUBLIC WORKS THE REPUBLIC OF INDONESIA	JICA JAPAN INTERNATIONAL COOPERATION AGENCY	KATAHIRA & ENGINEERS INTERNATIONAL	THE BASIC DESIGN STUDY ON THE PROJECT FOR THE IMPROVEMENT OF BRIDGES IN NIAS ISLAND IN THE REPUBLIC OF INDONESIA	TITLE : NOU BRIDGE APPROACH SLAB DETAILS (ABUTMENT A1)	SCALE : AS SHOWN	DRAWING No: 7-4 Rev.

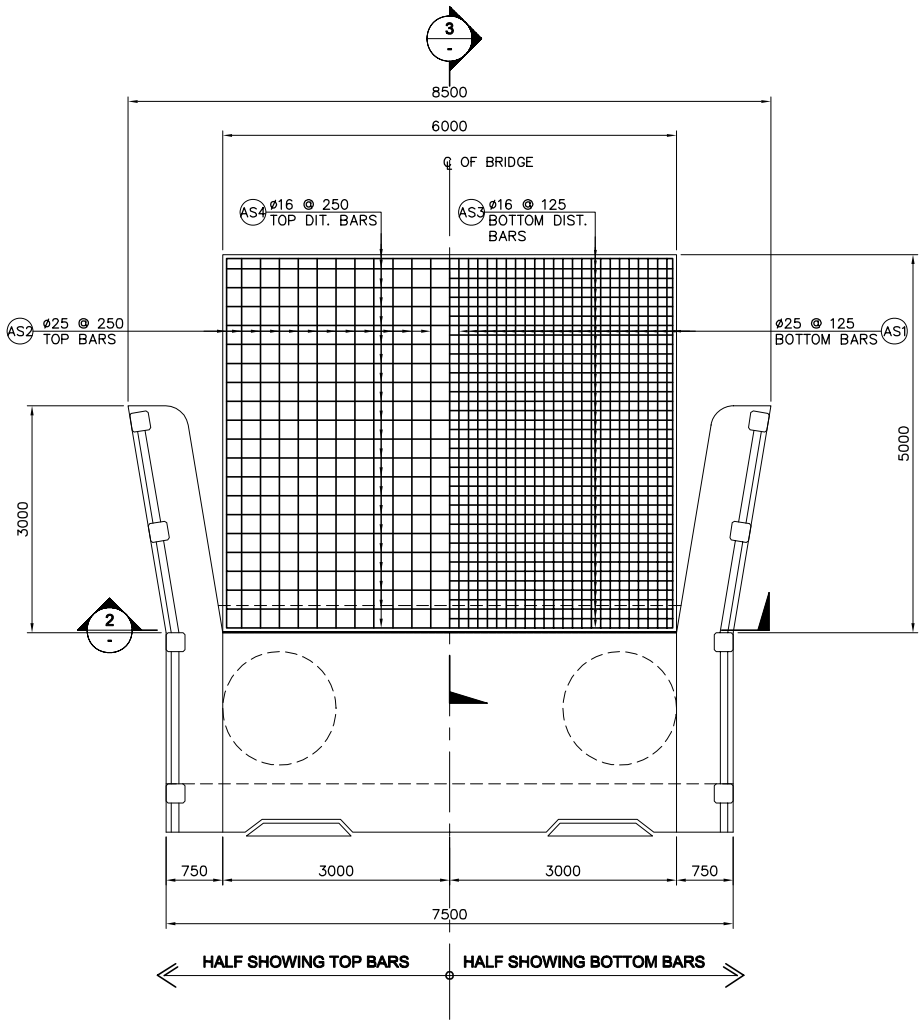

1 - PLAN
SCALE 1:100

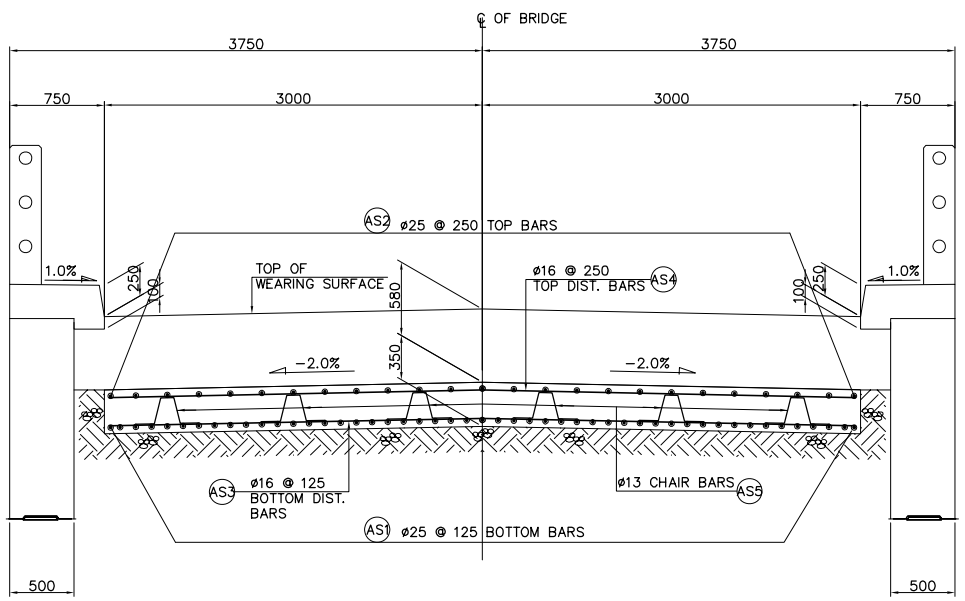

2 - SECTION
SCALE 1:60

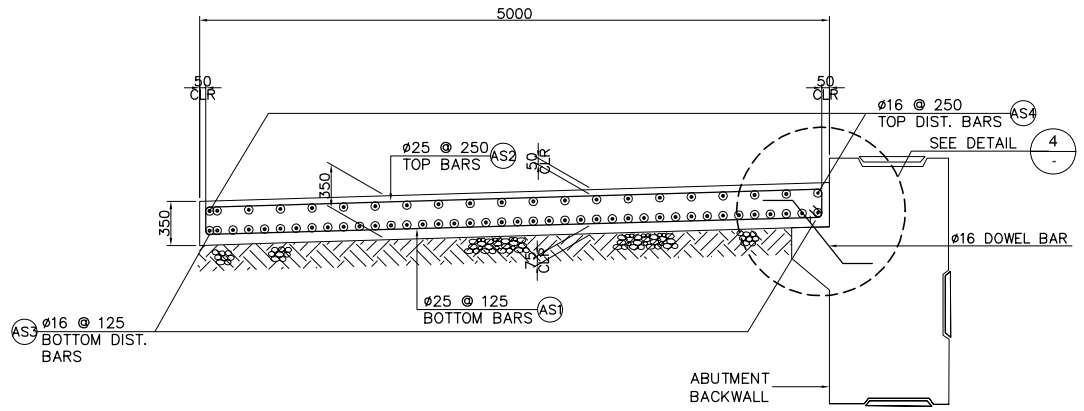

3 - SECTION
SCALE 1:60

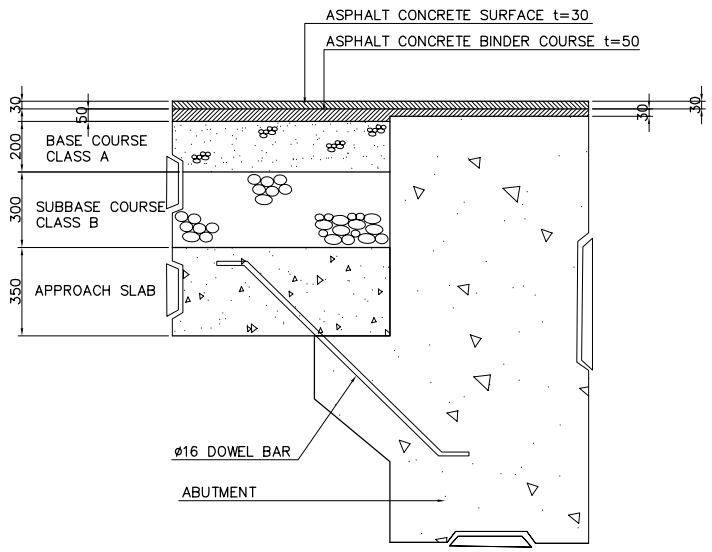

4 - DETAIL
SCALE 1:30

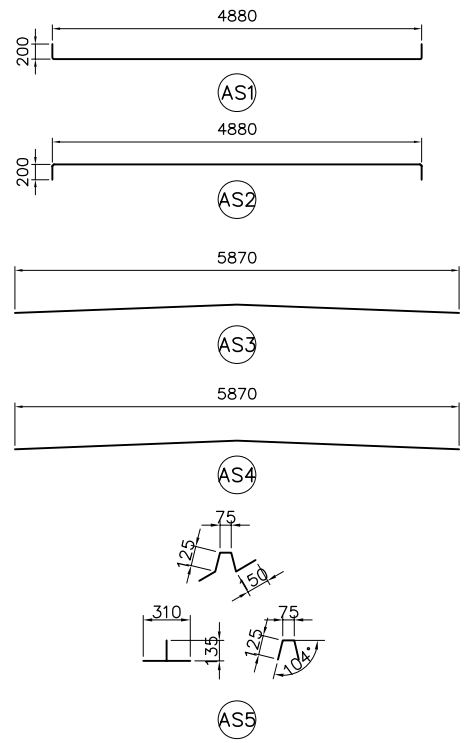

5 - BAR BENDING DIAGRAM
NOT TO SCALE

SCHEDULE OF REINFORCEMENT

BAR MARK	BAR SIZE	BAR LENGTH	QTY.	UNIT WT.	WT. PER BAR	TOTAL WT.
AS1	25	5.28	48	3.853	20.34	976.32
AS2	25	5.28	25	3.853	20.34	508.50
AS3	16	5.87	39	1.578	9.26	361.14
AS4	19	5.87	20	1.578	9.26	185.20
AS5	13	0.625	24	1.042	0.65	15.60

TOTAL = 2,046.76Kgs

DIRECTORATE GENERAL OF HIGHWAY MINISTRY OF PUBLIC WORKS THE REPUBLIC OF INDONESIA	JICA JAPAN INTERNATIONAL COOPERATION AGENCY	KATAHIRA & ENGINEERS INTERNATIONAL	THE BASIC DESIGN STUDY ON THE PROJECT FOR THE IMPROVEMENT OF BRIDGES IN NIAS ISLAND IN THE REPUBLIC OF INDONESIA	TITLE : APPROACH SLAB DETAILS (MEZAYA, IDANO GAWO AND GIDO SI'ITE BRIDGE)	SCALE : AS SHOWN	DRAWING No: 7-5 Rev.

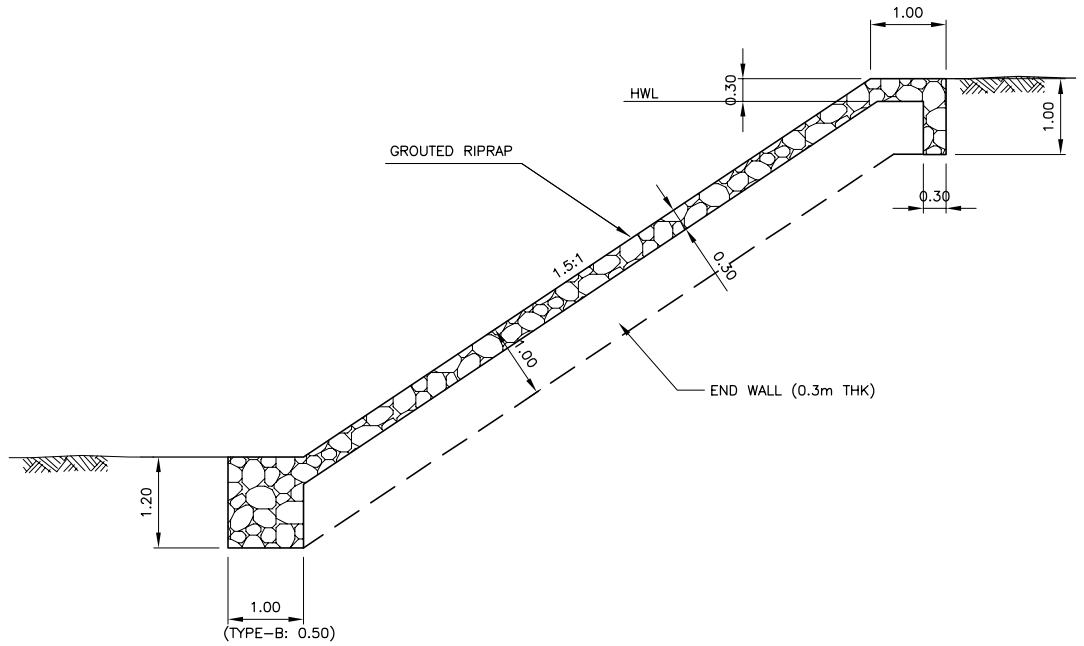

1 - GROUTED RIPRAP SLOPE PROTECTION
SCALE 1:100

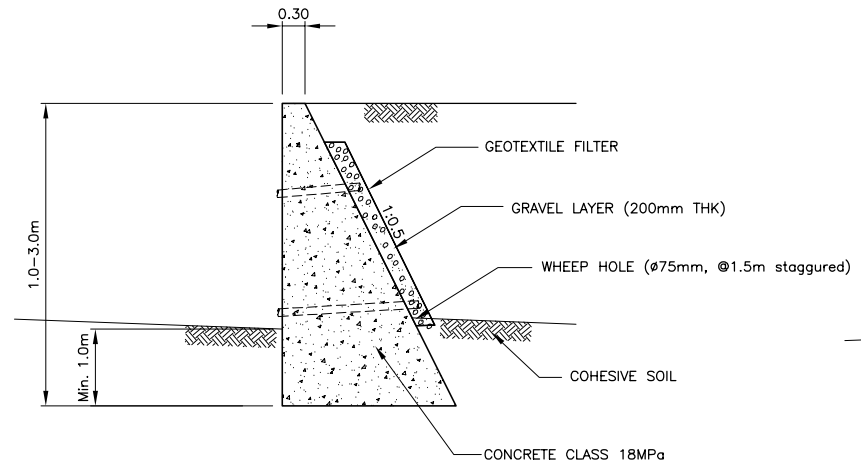

2 - CONCRETE WALL
SCALE 1:100

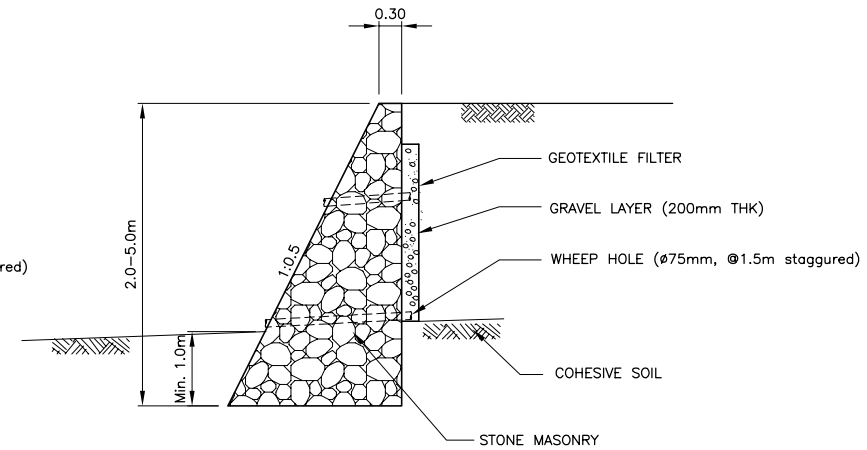

3 - STONE MASONRY WALL
SCALE 1:100

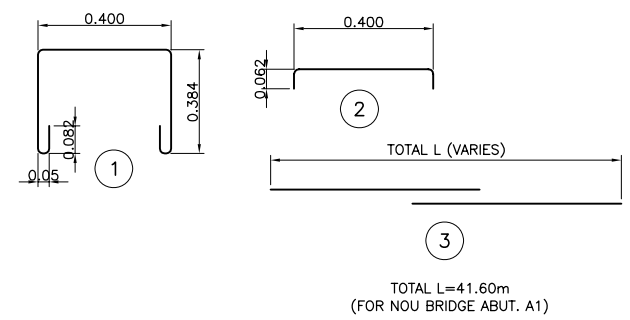

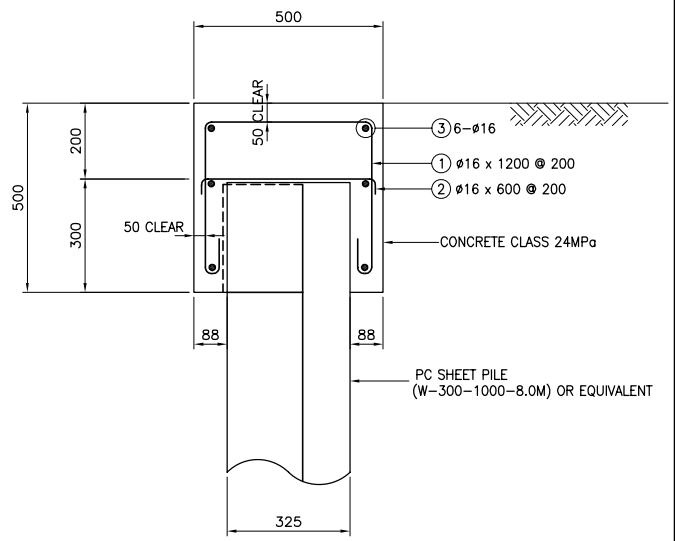

7 - PC SHEET PILE CAP DETAIL
NOT TO SCALE

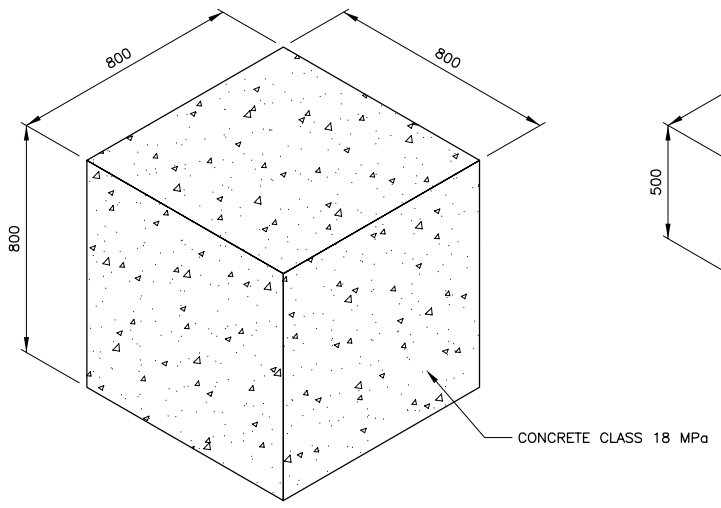

4 - CONCRETE BLOCK (FOR SCOURING PROTECTION)
NOT TO SCALE

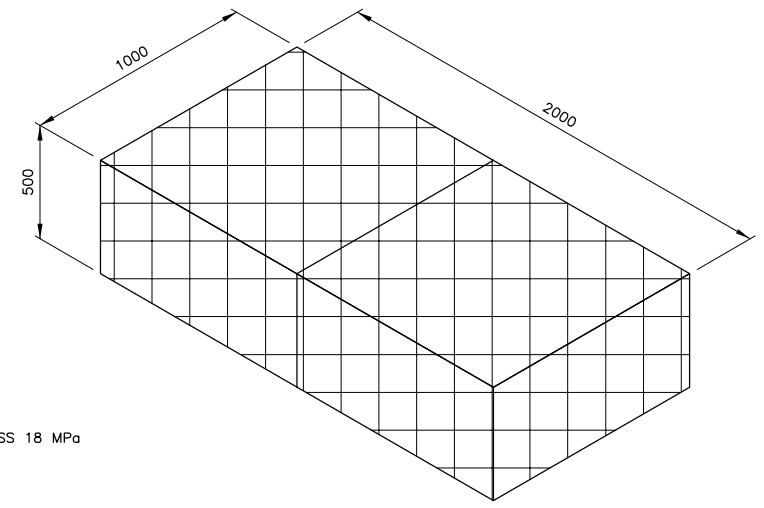

5 - GABION MATTRESS
NOT TO SCALE

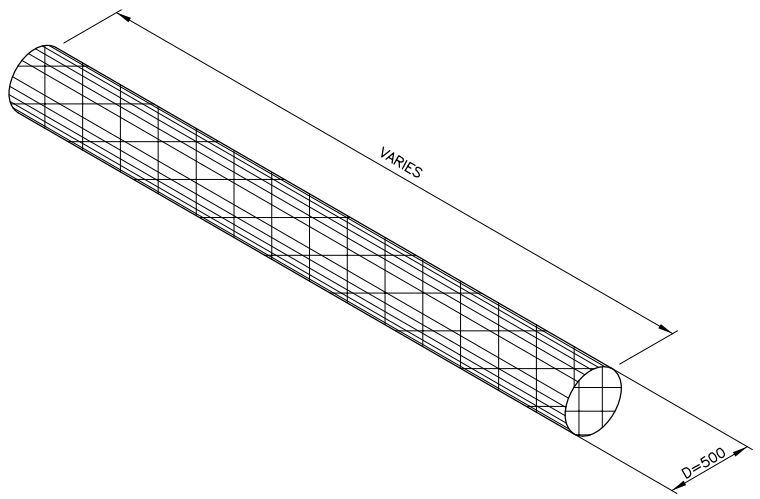

6 - CYLINDRICAL GABION
NOT TO SCALE

NOTE: THE GABION MATERIALS SHALL COMPLY WITH THE TECHNICAL SPECIFICATIONS OF THIS CONTRACT.

SCHEDULE OF REINFORCEMENT

BAR MARK	BAR SIZE	BAR LENGTH	QTY.	UNIT WT.	WT. PER BAR	TOTAL WT.
1	16	1.432	209	1.578	2.26	472.34
2	16	0.523	209	1.578	0.83	173.47
3	16	43.42	6	1.578	68.52	411.12

TOTAL = 25.41Kgs

DIRECTORATE GENERAL OF HIGHWAY MINISTRY OF PUBLIC WORKS THE REPUBLIC OF INDONESIA	JICA JAPAN INTERNATIONAL COOPERATION AGENCY	KATAHIRA & ENGINEERS INTERNATIONAL	THE BASIC DESIGN STUDY ON THE PROJECT FOR THE IMPROVEMENT OF BRIDGES IN NIAS ISLAND IN THE REPUBLIC OF INDONESIA	TITLE : TYPICAL RIVETMENT, STONE MASONRY & PROTECTIONS	SCALE : AS SHOWN	DRAWING No: 7-6

Rev.

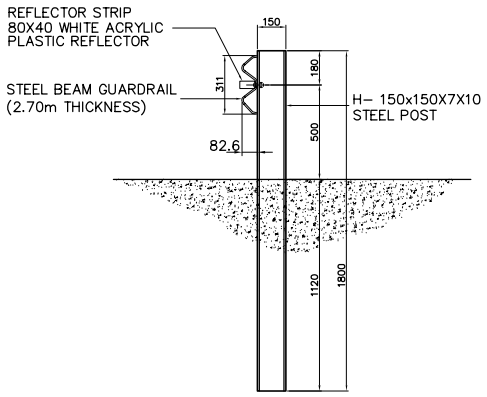

1 - GUARDRAIL ELEVATION
SCALE 1:40

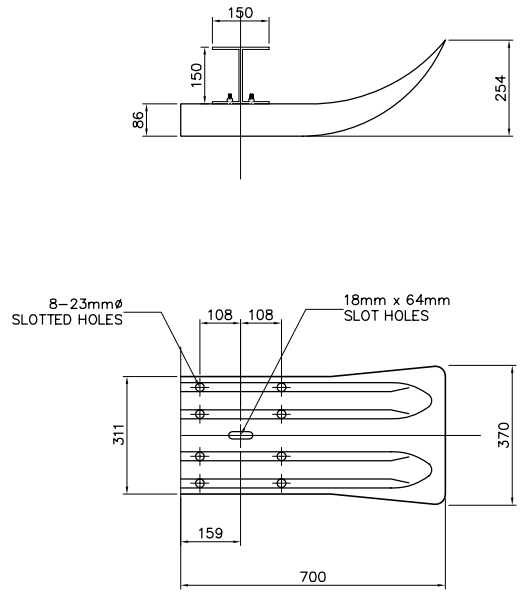

4 - GUARDRAIL TERMINAL DETAIL
SCALE 1:20

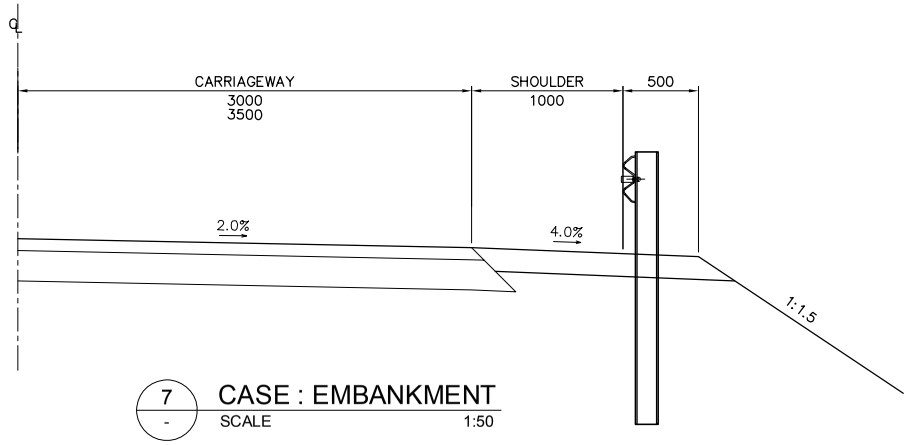

7 - CASE : EMBANKMENT
SCALE 1:50

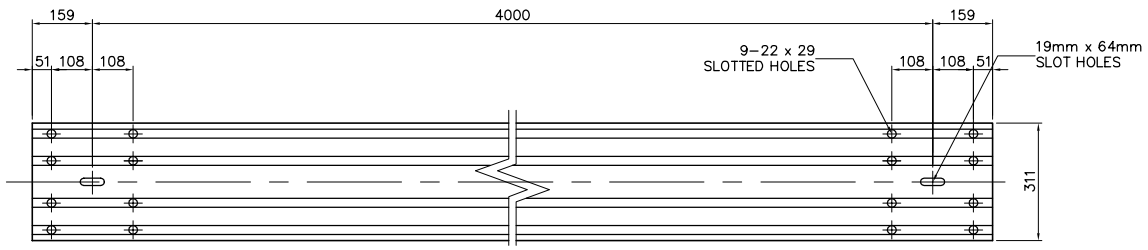

2 - ELEVATION
SCALE 1:20

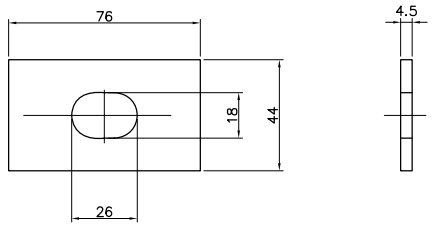

5 - BEAM WASHER
NOT TO SCALE

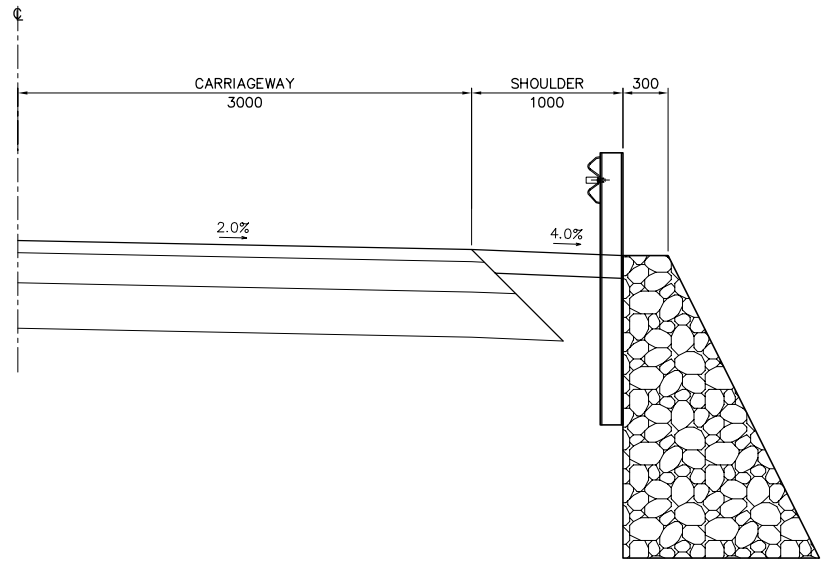

8 - CASE : STONE MASONRY WALL
SCALE 1:50

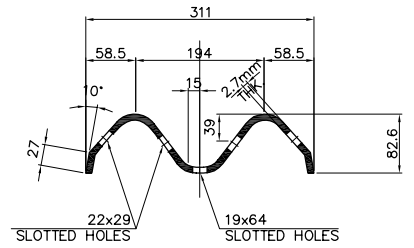

3 - SECTION THROUGH BEAM
NOT TO SCALE

NOTES:

1. MATERIALS AND WORKMANSHIP FOR METAL BEAM GUARDRAIL SHALL COMPLY TO THE TECHNICAL SPECIFICATIONS OF THIS CONTRACT.
2. ALL DIMENSIONS ARE IN MILLIMETERS UNLESS OTHERWISE INDICATED.
3. ALL NUTS SHALL BE WELDED TO BOLTS AFTER TIGHTENING.
4. STRUCTURAL STEEL SHALL CONFORM TO THE REQUIREMENTS OF AASHTO M180
5. EXACT LOCATION OF GUARDRAILS SHALL BE VERIFIED ON SITE DURING CONSTRUCTION.

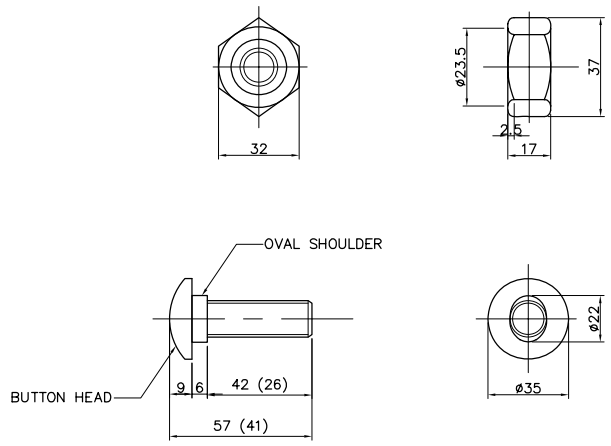

6 - BOLT AND NUT
NOT TO SCALE

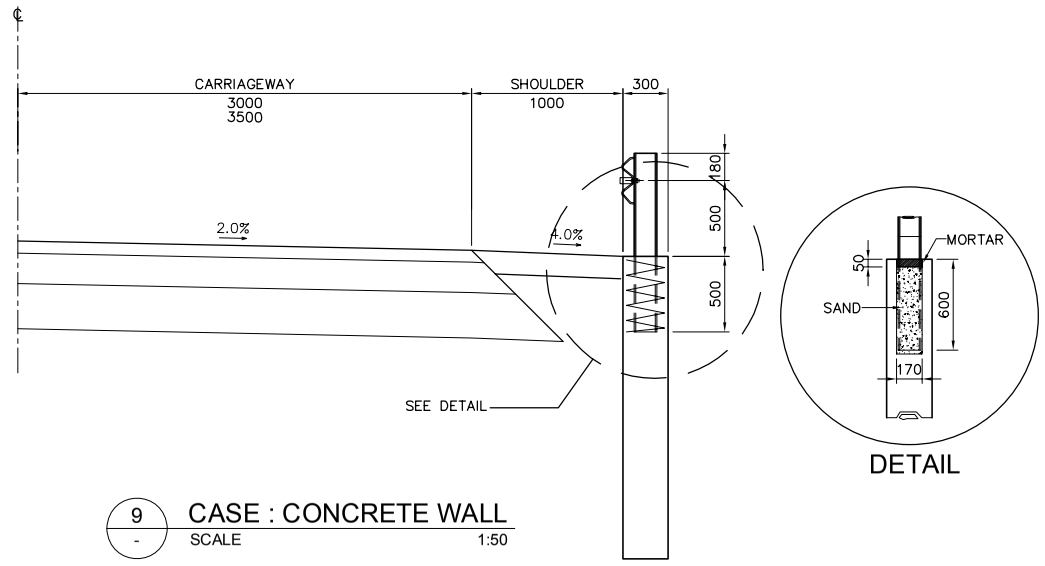

9 - CASE : CONCRETE WALL
SCALE 1:50

DIRECTORATE GENERAL OF HIGHWAY MINISTRY OF PUBLIC WORKS THE REPUBLIC OF INDONESIA	JICA JAPAN INTERNATIONAL COOPERATION AGENCY	KATAHIRA & ENGINEERS INTERNATIONAL	THE BASIC DESIGN STUDY ON THE PROJECT FOR THE IMPROVEMENT OF BRIDGES IN NIAS ISLAND IN THE REPUBLIC OF INDONESIA	TITLE : STEEL BEAM GUARDRAIL DETAILS	SCALE : AS SHOWN	DRAWING No: 7-7

Rev.

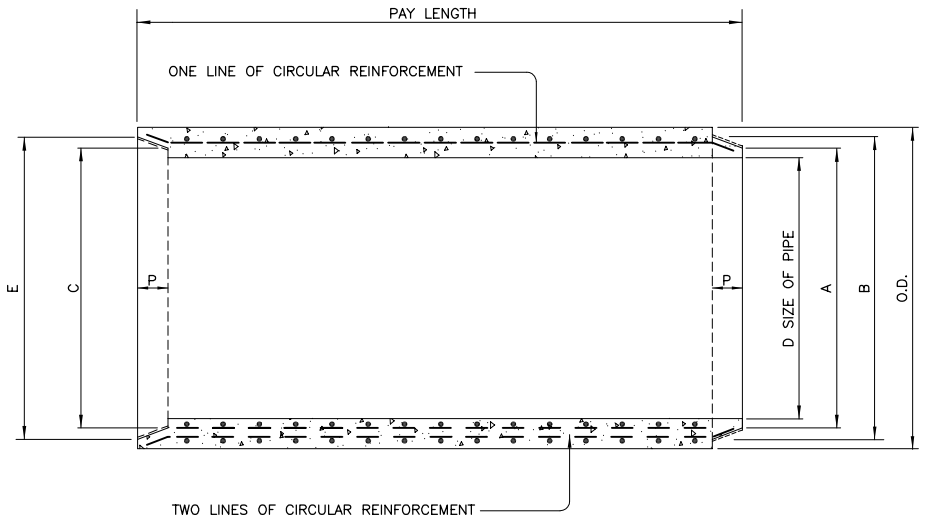

1 - LONGITUDINAL SECTION - TONGUE & GROOVE TYPE
NOT TO SCALE

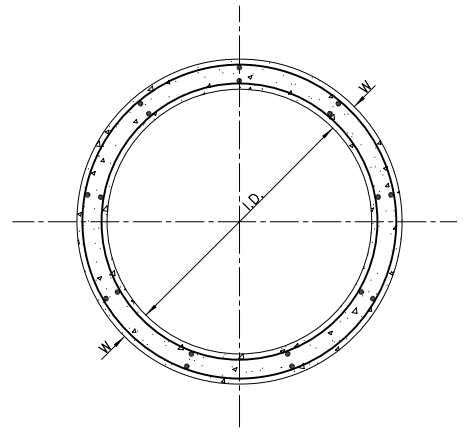

A - TWO LINES OF CIRCULAR REINFORCEMENT
NOT TO SCALE

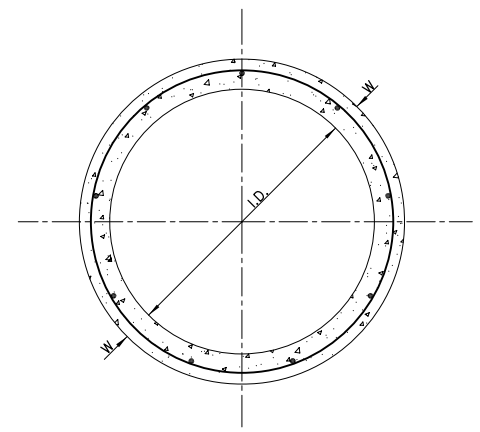

B - ONE LINE OF CIRCULAR REINFORCEMENT
NOT TO SCALE

STANDARD STRENGTH REINFORCED CONCRETE CULVERT

CONCRETE 3,500 PSI (24.1 MPa)									CONCRETE 4,500 PSI (31.0MPa)								STRENGTH TEST REQUIREMENTS, Kg. PER LINEAR m. OF PIPE	
SIZE OF PIPE mm.	WALL THICK-NESS mm.	TONGUE mm.		GROOVE mm.		DEPTH mm.	MINIMUM REINFORCEMENT mm PER LINEAR m. OF PIPE BARREL		WALL THICK-NESS mm.	TONGUE mm.		GROOVE mm.		DEPTH mm.	MIN. REINF. mm/LINEAR m. OF PIPE BARREL	THREE-EDGE BEARING METHOD	
I.D.	W	A	B	C	E	P	CIRCULAR REINF. IN CIRCULAR PIPE	ELLIPTICAL REINF. IN CIRCULAR PIPE	W	A	B	C	E	P	CIRCULAR REINF. IN CIRCULAR PIPE	LOAD TO PRODUCE A .254mm. CRACK	ULTIMATE LOAD
610	77	673	527	680	699	45	1 LINE 360	1LINE 275	64	661	680	502	686	45	1 LINE 424	4473	7455
910	102	1004	527	1011	1030	64	2 LINES 381 EACH	1 LINE 381	86	988	1007	502	1013	64	2 LINES 466 EACH	6039	9840

THE DISTANCE FROM THE CENTER LINE OF THE REINFORCEMENT TO THE NEAREST SURFACE OF THE CONCRETE IS ASSUMED AS 32mm. FOR PIPES WITH SHELL THICKNESS OF 64mm. OR MORE TEST-LOAD FOR SAND BEARING TEST SHALL BE ONE AND A HALF TIMES THOSE SPECIFIED IN THIS TABLE FOR THREE EDGE-BEARING TEST.

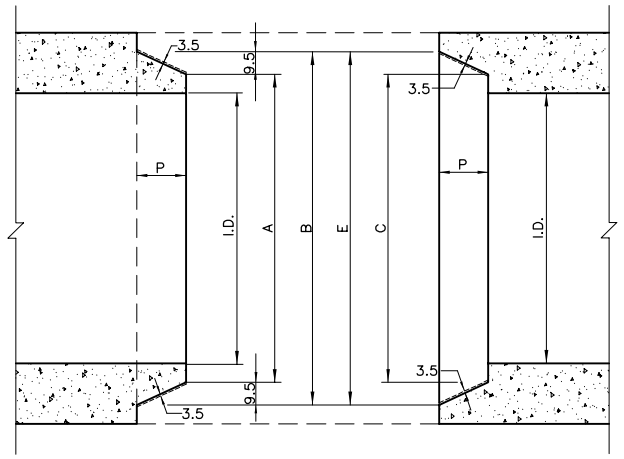

TONGUE END GROOVE END

STANDARD CONCRETE PIPE COLLAR		
PIPE DIAMETER (mm.)	CONCRETE (cu.m.)	REBARS (kg.)
610	0.656	10.0
910	1.056	12.5

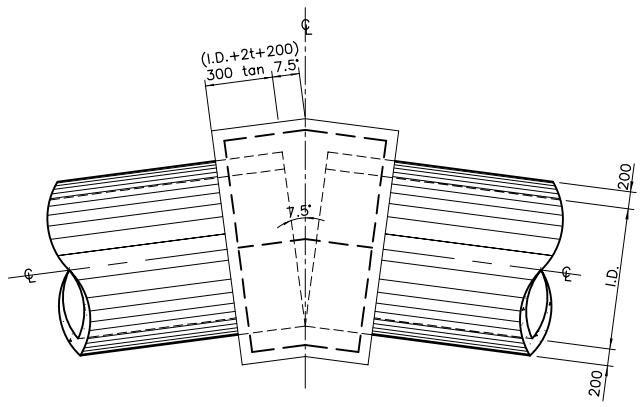

2a - PLAN
N T S

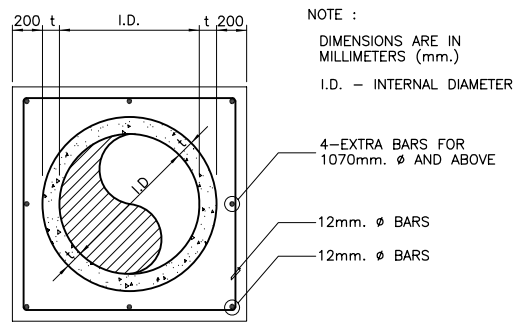

NOTE :
DIMENSIONS ARE IN MILLIMETERS (mm.)
I.D. - INTERNAL DIAMETER

2b - SECTION
N T S

2 - PIPE COLLAR AT BEND DETAILS
NOT TO SCALE

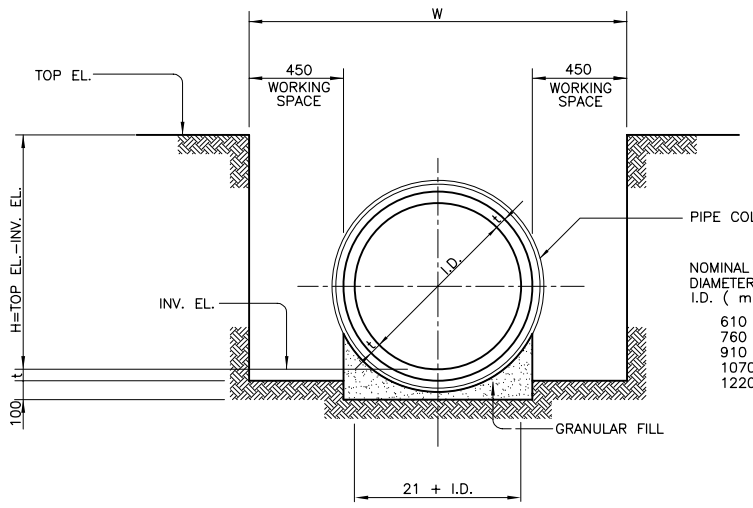

NOMINAL PIPE DIAMETER I.D. (mm.)	PIPE THICKNESS t (mm.)
610	77
760	89
910	102
1070	115
1220	127

3 - TRENCHING AND BEDDING DETAILS
NOT TO SCALE

DIRECTORATE GENERAL OF HIGHWAY MINISTRY OF PUBLIC WORKS THE REPUBLIC OF INDONESIA	JICA JAPAN INTERNATIONAL COOPERATION AGENCY	KATAHIRA & ENGINEERS INTERNATIONAL	THE BASIC DESIGN STUDY ON THE PROJECT FOR THE IMPROVEMENT OF BRIDGES IN NIAS ISLAND IN THE REPUBLIC OF INDONESIA	TITLE : STANDARD REINFORCED CONCRETE PIPE	SCALE : AS SHOWN	DRAWING No: 7-8 Rev.

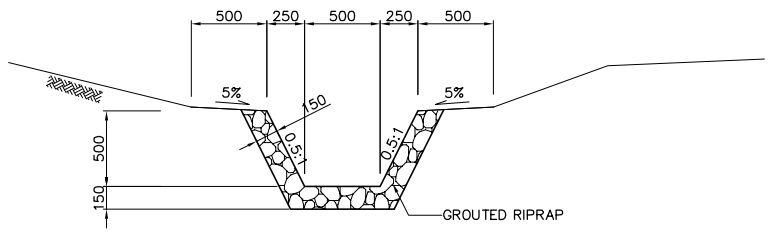

1A - DITCH TYPE-A

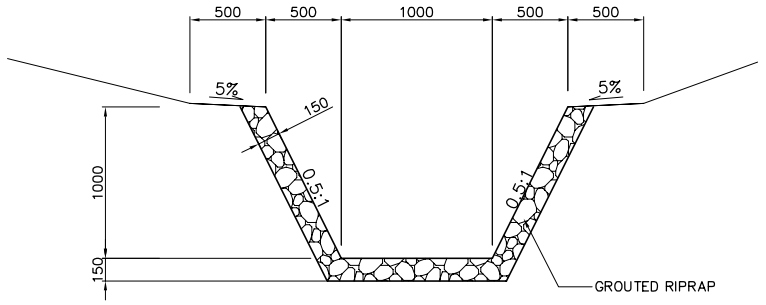

1B - DITCH TYPE-B

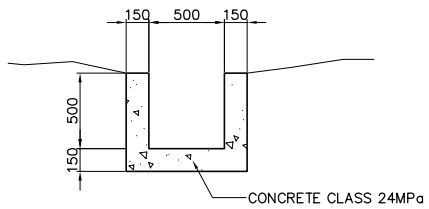

1C - DITCH TYPE-C

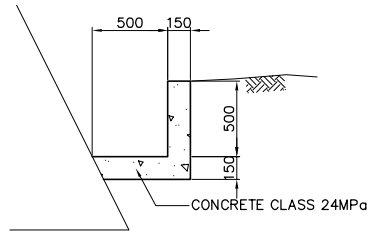

1D - DITCH TYPE-D

1 - DITCH TYPE
SCALE 1:50

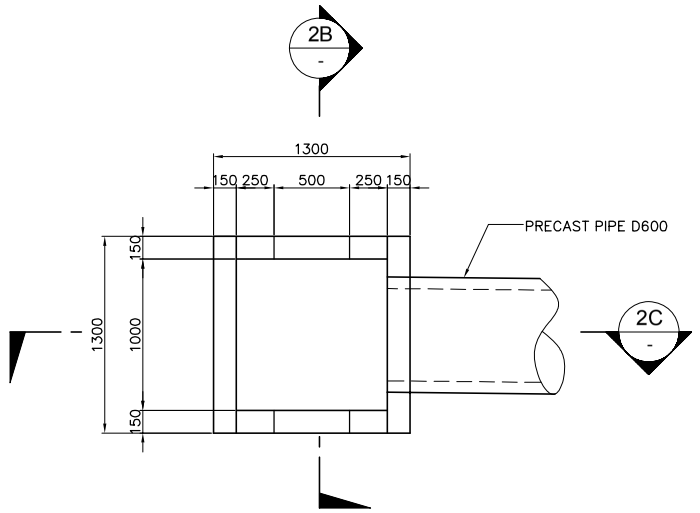

2A - PLAN

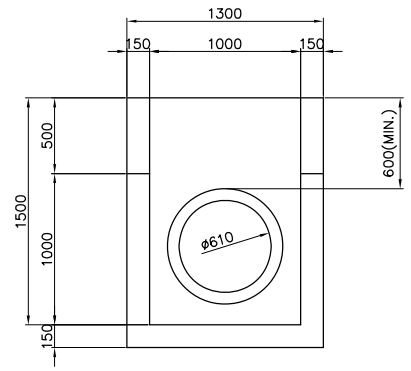

2B - SECTION

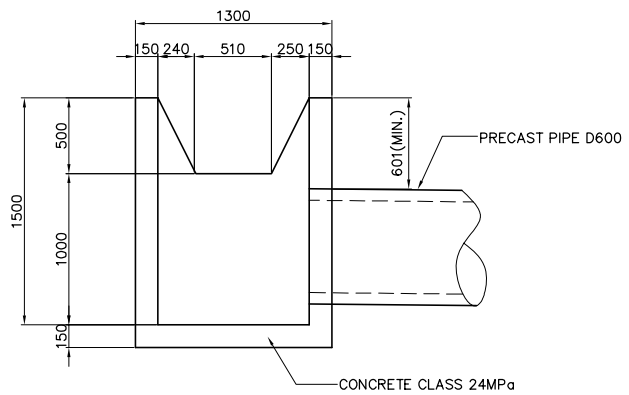

2C - PLAN

2 - PIPE INLET / OUTLET
SCALE 1:50

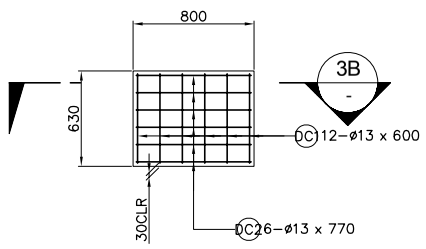

3A - PLAN

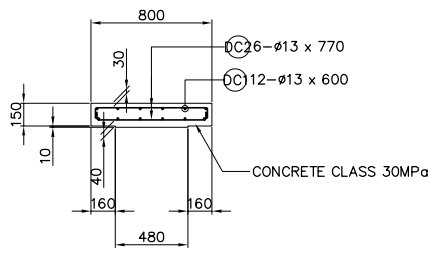

3B - SECTION

3 - DITCH COVER DETAIL
SCALE 1:50

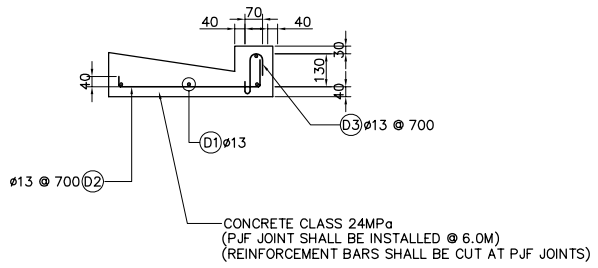

4 - GUTTER DITCH
SCALE 1:30

SCHEDULE OF REINFORCEMENT

STRUCTURE COMPONENT	BAR MARK	BAR SIZE	QTY	LENGTH PER BAR (mm)	UNIT WEIGHT (kg/m)	WEIGHT PER BAR	TOTAL WEIGHT (kg)	REMARKS
GUTTER DITCH BERM	D1	ø13	4	1000	1.042	1.04	4.16	
	D2	ø13	3	720	1.042	0.75	2.25	
	D3	ø13	3	330	1.042	0.34	1.02	
TOTAL = 7.43 PER METER								

SCHEDULE OF REINFORCEMENT

STRUCTURE COMPONENT	BAR MARK	BAR SIZE	QTY	LENGTH PER BAR (mm)	UNIT WEIGHT (kg/m)	WEIGHT PER BAR	TOTAL WEIGHT (kg)	REMARKS
DITCH COVER	DC1	ø13	12	600	1.042	0.63	7.56	
	DC2	ø13	6	2090	1.042	2.18	13.08	
TOTAL = 20.64 PER COVER								

DIRECTORATE GENERAL OF HIGHWAY MINISTRY OF PUBLIC WORKS THE REPUBLIC OF INDONESIA	JICA JAPAN INTERNATIONAL COOPERATION AGENCY	KATAHIRA & ENGINEERS INTERNATIONAL	THE BASIC DESIGN STUDY ON THE PROJECT FOR THE IMPROVEMENT OF BRIDGES IN NIAS ISLAND IN THE REPUBLIC OF INDONESIA	TITLE : BRIDGE STANDARD: DITCHES, PIPE INLET / OUTLET	SCALE : AS SHOWN	DRAWING No: 7-9

Rev.