ELEMENTS OF CURVE											
PI NO.	STATION	COORDINATES		Δ	R	T	Lc	E	e%	W	V(kph)
		NORTHING	EASTING								
PI-00	0+120.200	113932.930	362549.410	NO HORIZONTAL CURVE							-
PI-01	0+210.474	113852.009	362589.423	12°14'03"	300.00	32.15	64.06	1.720	-	-	-
PI-02	0+520.000	113609.733	362782.452	NO HORIZONTAL CURVE							

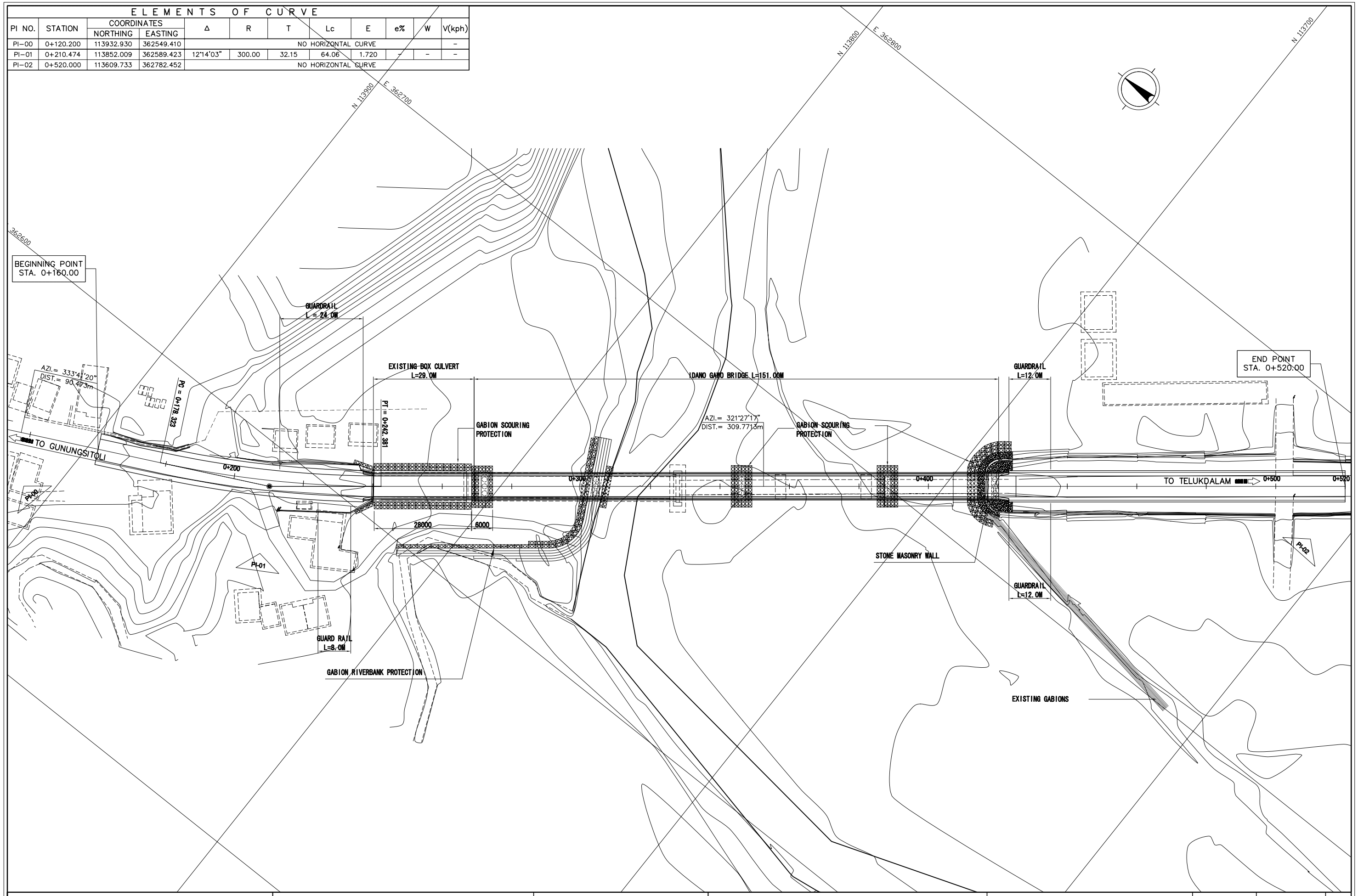

DIRECTORATE GENERAL OF HIGHWAY MINISTRY OF PUBLIC WORKS THE REPUBLIC OF INDONESIA	JICA JAPAN INTERNATIONAL COOPERATION AGENCY	KATAHIRA & ENGINEERS INTERNATIONAL	THE BASIC DESIGN STUDY ON THE PROJECT FOR THE IMPROVEMENT OF BRIDGES IN NIAS ISLAND IN THE REPUBLIC OF INDONESIA	TITLE : IDANO GAWO BRIDGE (GENERAL SITE PLAN)	SCALE : 1:1000	DRAWING No: 4-1 Rev.

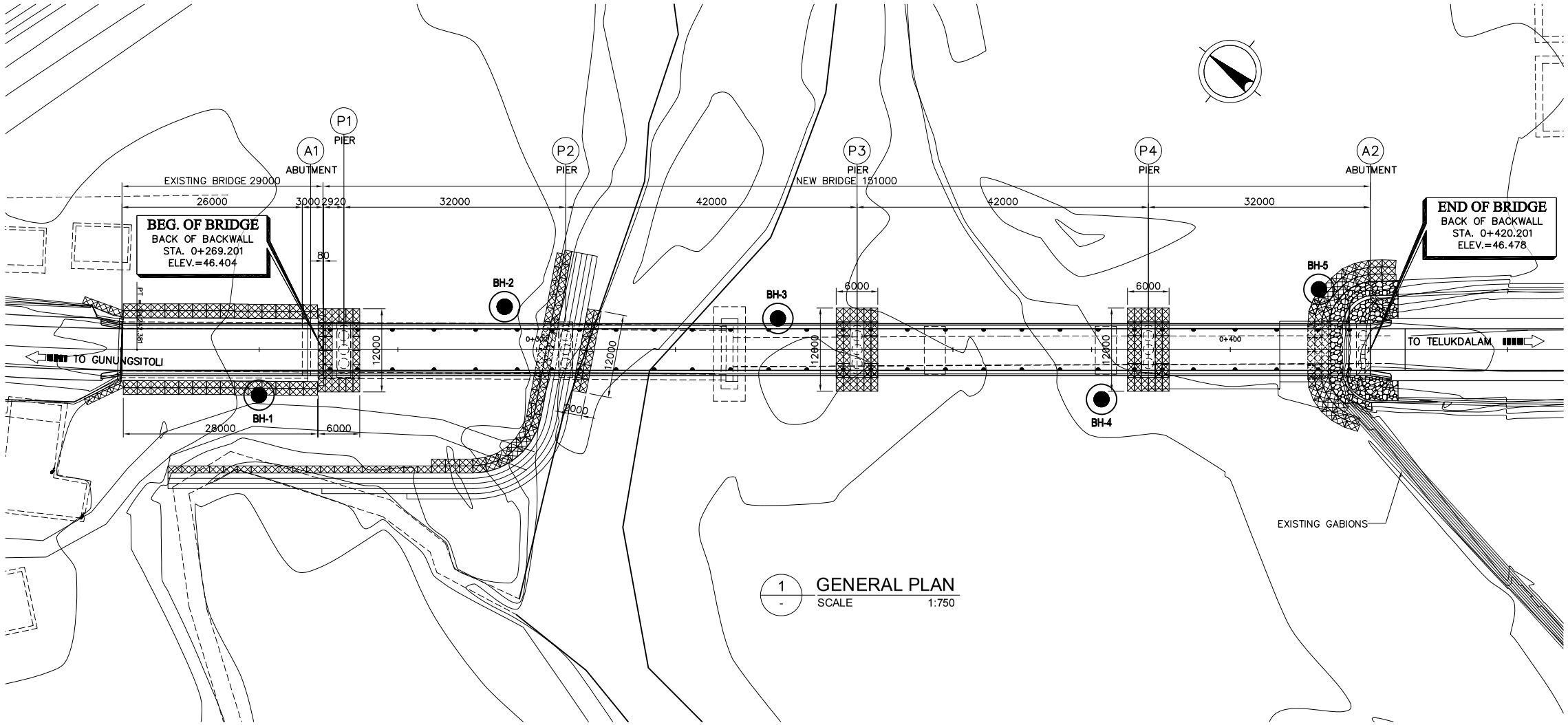

1 GENERAL PLAN
SCALE 1:750

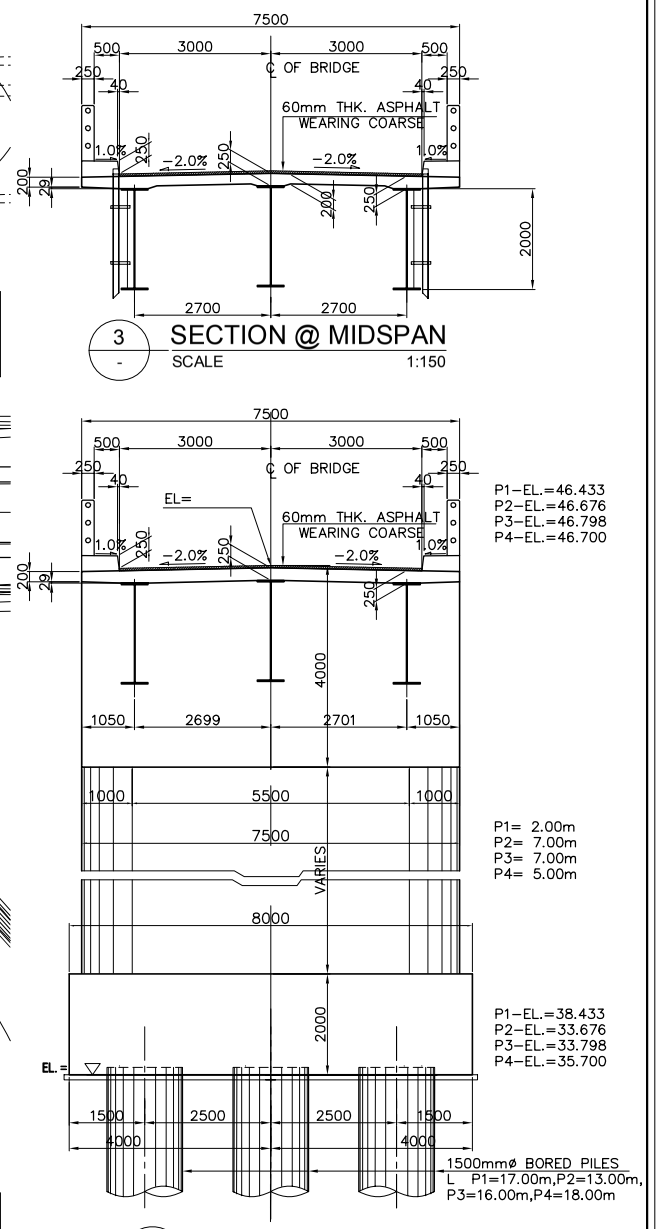

3 SECTION @ MIDSPAN
SCALE 1:150

4 SECTION @ PIER
SCALE 1:150

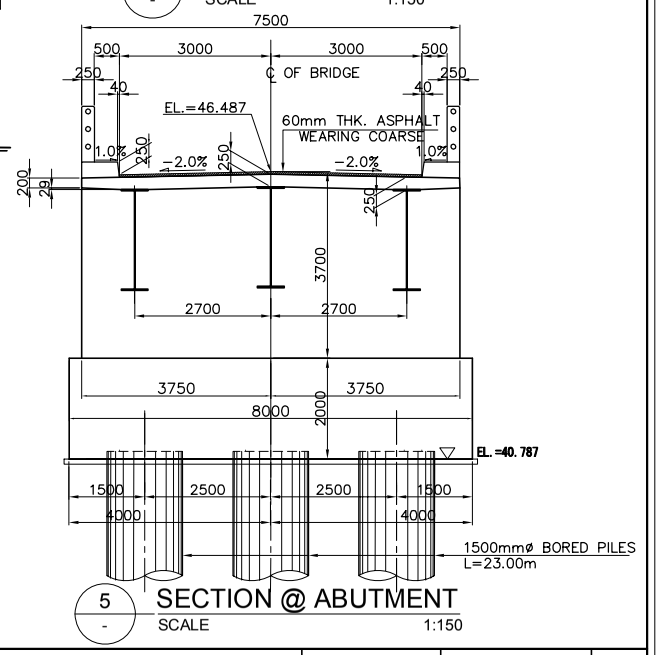

5 SECTION @ ABUTMENT
SCALE 1:150

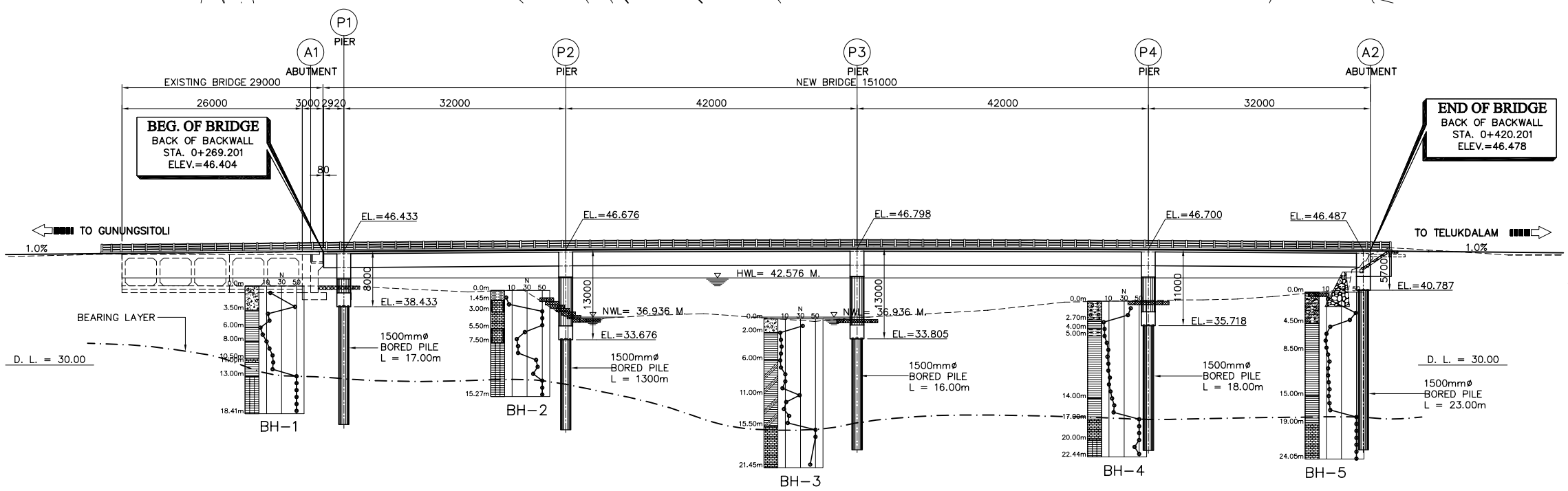

2 GENERAL ELEVATION
SCALE 1:750

DIRECTORATE GENERAL OF HIGHWAY MINISTRY OF PUBLIC WORKS THE REPUBLIC OF INDONESIA	JICA JAPAN INTERNATIONAL COOPERATION AGENCY	KATAHIRA & ENGINEERS INTERNATIONAL	THE BASIC DESIGN STUDY ON THE PROJECT FOR THE IMPROVEMENT OF BRIDGES IN NIAS ISLAND IN THE REPUBLIC OF INDONESIA	TITLE : IDANO GAWO BRIDGE GENERAL VIEW	SCALE : AS SHOWN	DRAWING No: 4-2 Rev.

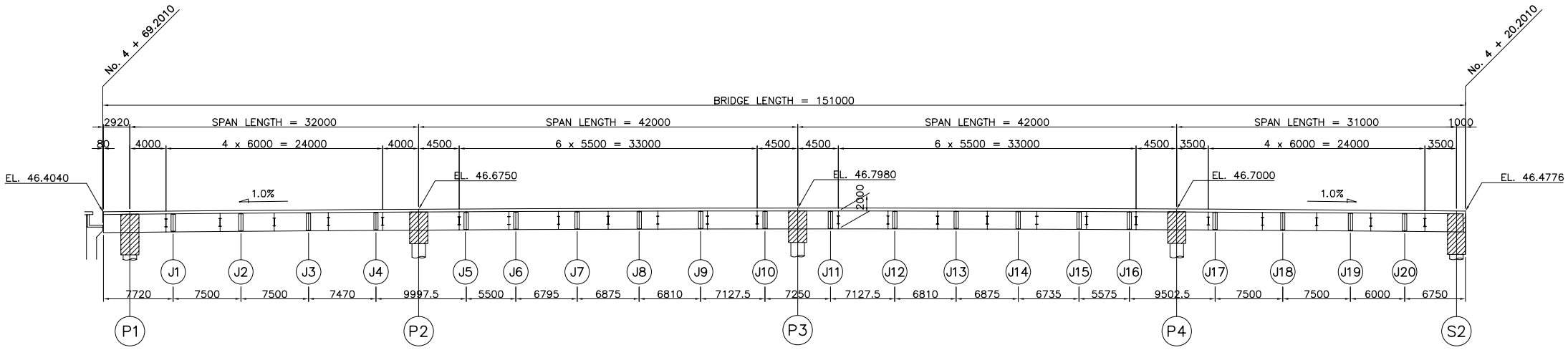

1 ELEVATION
SCALE 1:300

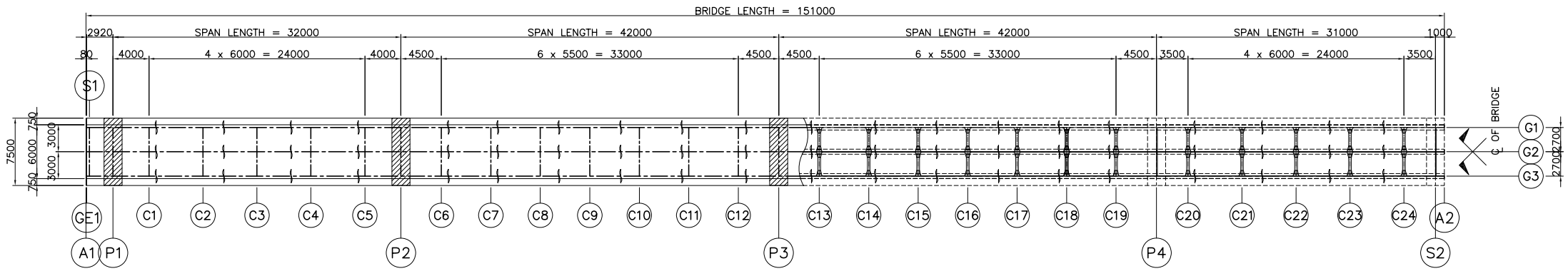

2 P L A N
SCALE 1:300

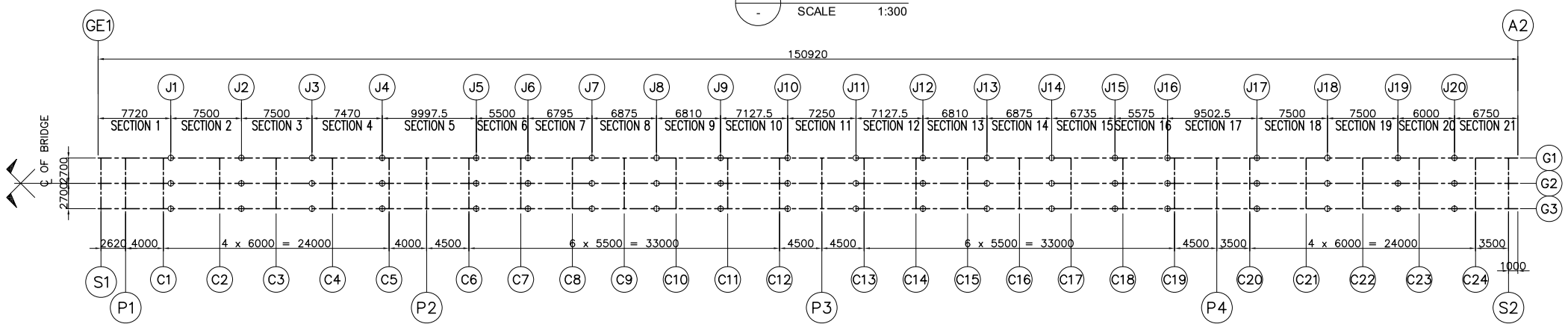

3 KEY PLAN
SCALE 1:300

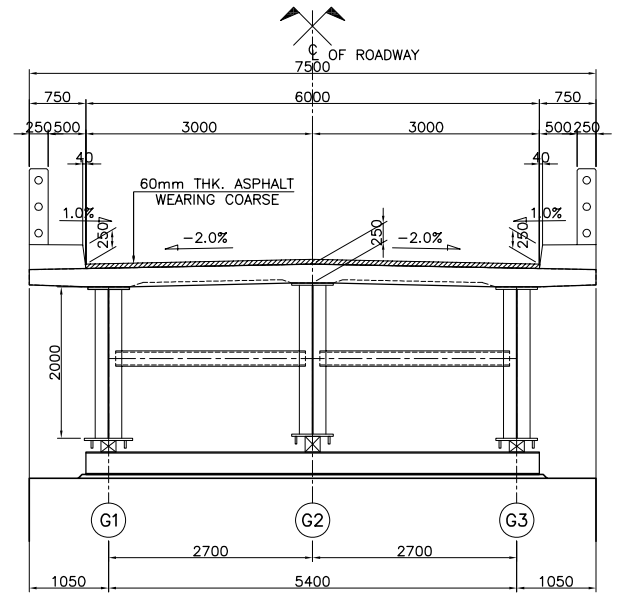

4 SECTION @ P1~P4, S2
SCALE 1:50

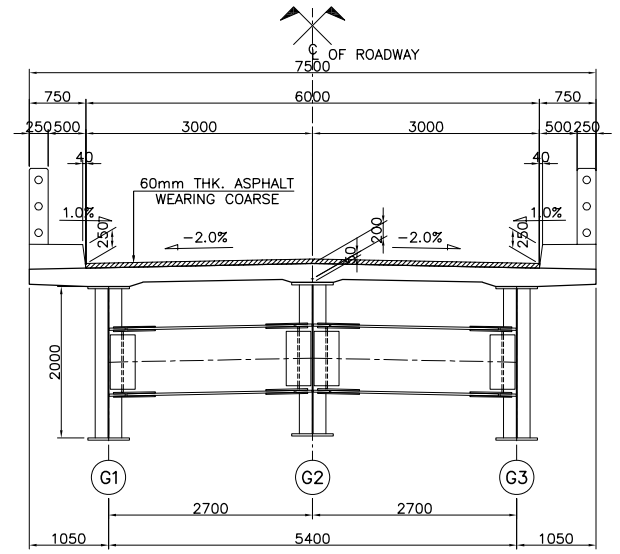

5 SECTION @ C1~C24
SCALE 1:50

DIRECTORATE GENERAL OF HIGHWAY MINISTRY OF PUBLIC WORKS THE REPUBLIC OF INDONESIA	JICA JAPAN INTERNATIONAL COOPERATION AGENCY	KATAHIRA & ENGINEERS INTERNATIONAL	THE BASIC DESIGN STUDY ON THE PROJECT FOR THE IMPROVEMENT OF BRIDGES IN NIAS ISLAND IN THE REPUBLIC OF INDONESIA	TITLE : IDANO GAWO BRIDGE GEN. DIMENSION OF SUPERSTRUCTURE	SCALE : AS SHOWN	DRAWING No: 4-3

Rev.

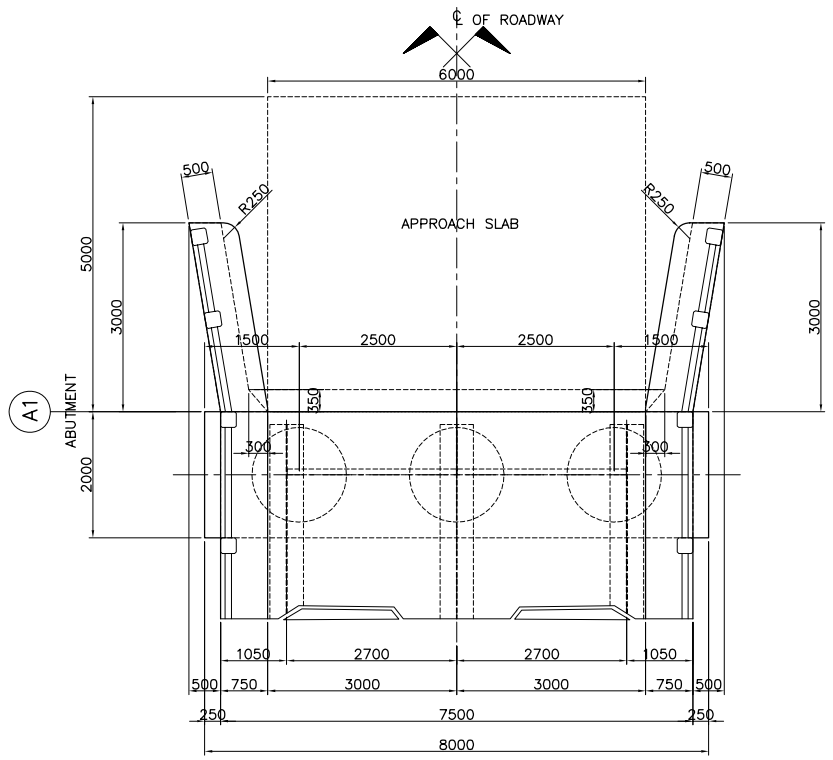

2 - PLAN
SCALE 1:60

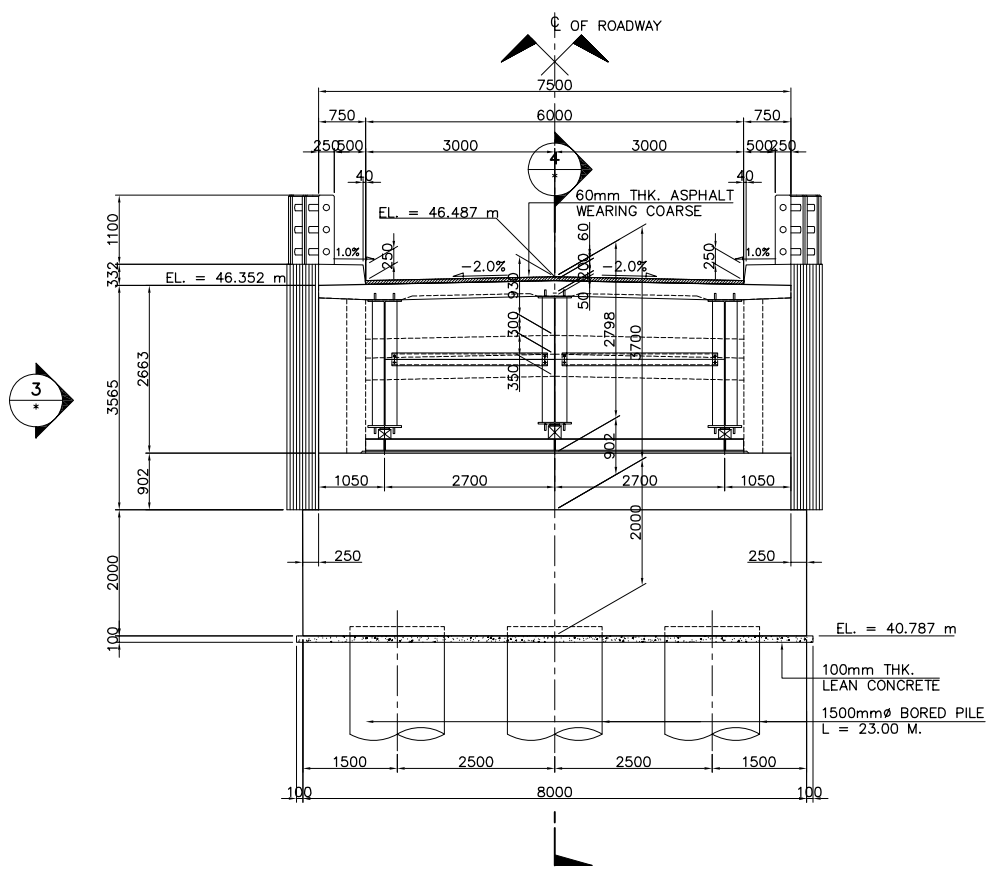

1 - ELEVATION
SCALE 1:60

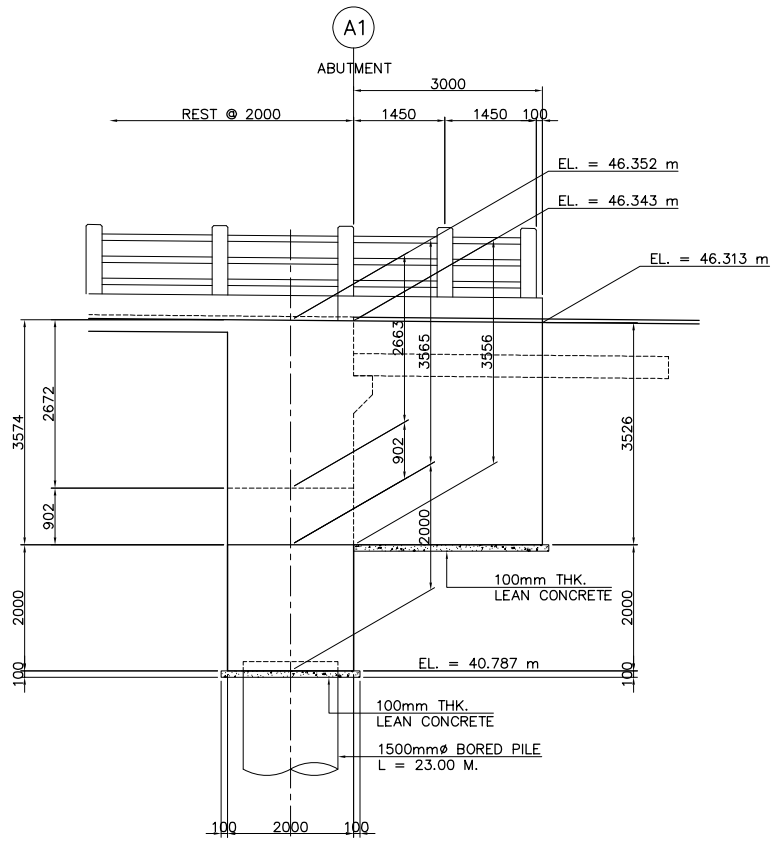

3 - ELEVATION
SCALE 1:60

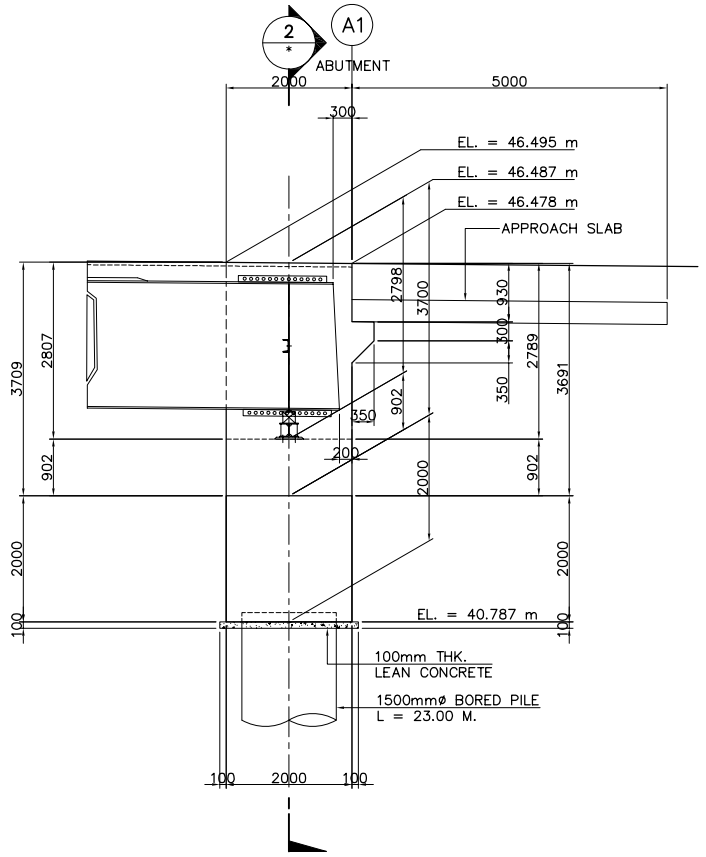

4 - ELEVATION
SCALE 1:60

DIRECTORATE GENERAL OF HIGHWAY MINISTRY OF PUBLIC WORKS THE REPUBLIC OF INDONESIA	JICA JAPAN INTERNATIONAL COOPERATION AGENCY	KATAHIRA & ENGINEERS INTERNATIONAL	THE BASIC DESIGN STUDY ON THE PROJECT FOR THE IMPROVEMENT OF BRIDGES IN NIAS ISLAND IN THE REPUBLIC OF INDONESIA	TITLE : IDANO GAWO BRIDGE SUBSTRUCTURE STRUCTURAL DIMENSION (ABUTMENT A2)	SCALE : AS SHOWN	DRAWING No: 4-4 Rev.

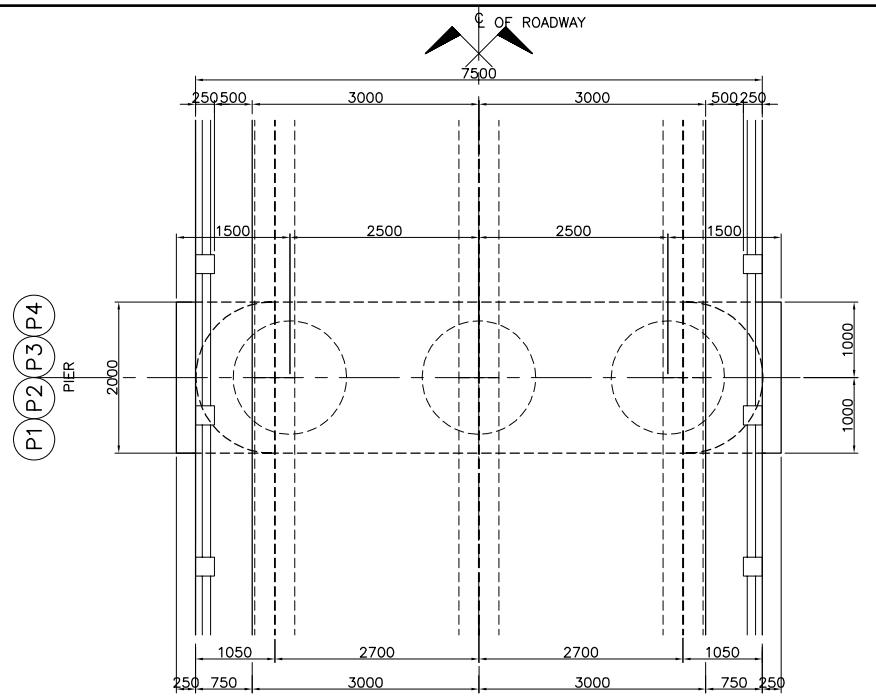

1 PLAN
SCALE 1:50

TABLE OF DIMENSIONS										
STRUCTURE	EL. A	EL. B	EL. C	L1	L2	L3	L4	L5	L6	L7
PIER P1	46.433	46.298	38.433	8000	7865	2800	1200	2000	2665	3200
PIER P2	46.676	46.541	33.676	13000	12865	2814	1186	7000	2679	8186
PIER P3	46.798	46.663	33.798	13000	12865	2826	1174	7000	2691	8174
PIER P4	46.700	46.565	35.700	11000	10865	2813	1187	5000	2678	6187

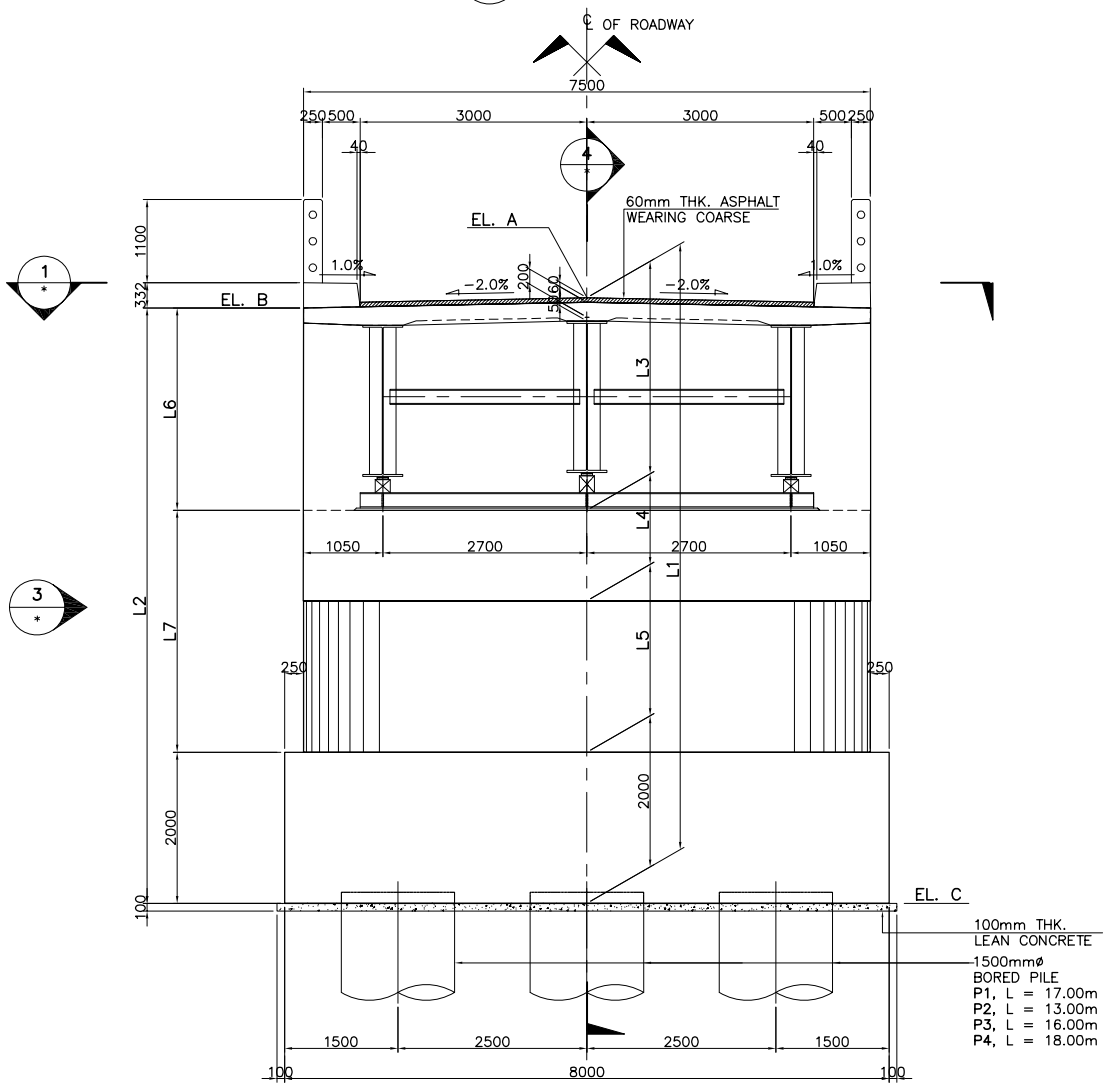

2 ELEVATION
SCALE 1:50

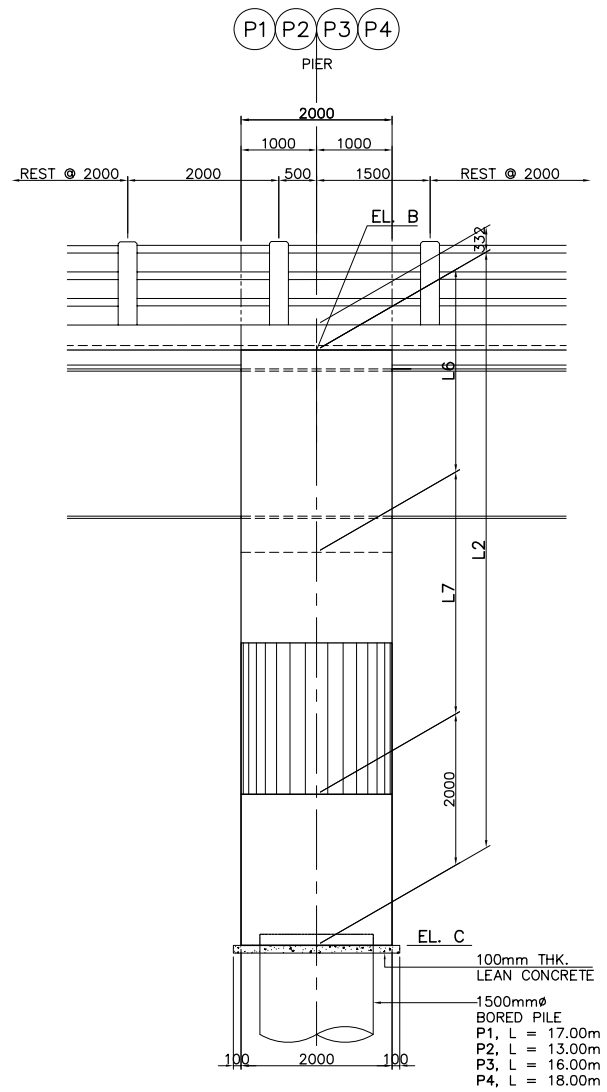

3 ELEVATION
SCALE 1:50

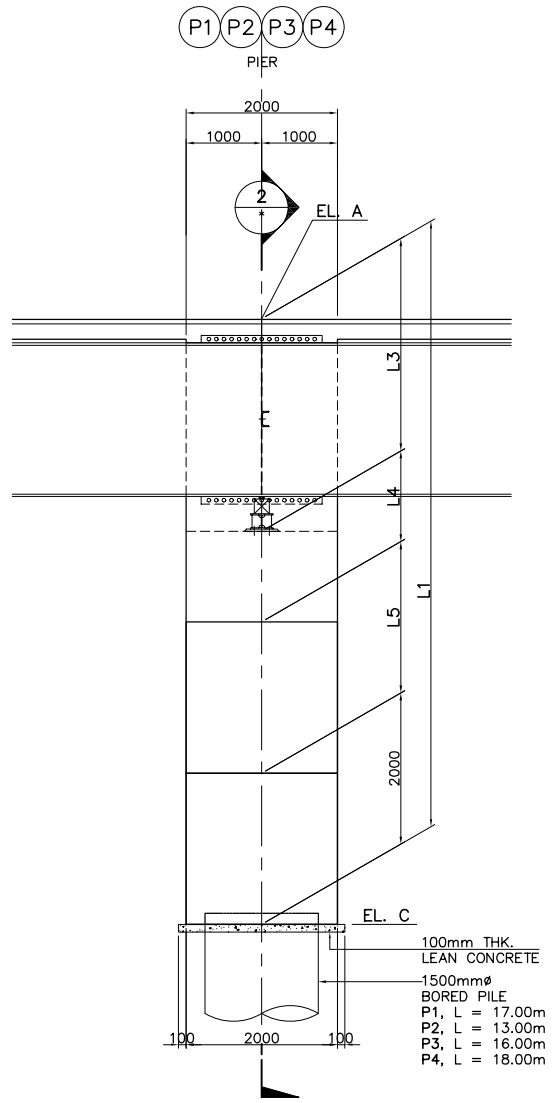

4 ELEVATION
SCALE 1:50

DIRECTORATE GENERAL OF HIGHWAY MINISTRY OF PUBLIC WORKS THE REPUBLIC OF INDONESIA	JICA JAPAN INTERNATIONAL COOPERATION AGENCY	KATAHIRA & ENGINEERS INTERNATIONAL	THE BASIC DESIGN STUDY ON THE PROJECT FOR THE IMPROVEMENT OF BRIDGES IN NIAS ISLAND IN THE REPUBLIC OF INDONESIA	TITLE : IDANO GAWO BRIDGE SUBSTRUCTURE STRUCTURAL DIMENSION (PIER P1, P2 , P3 & P4)	SCALE : AS SHOWN	DRAWING No: 4-5 Rev.

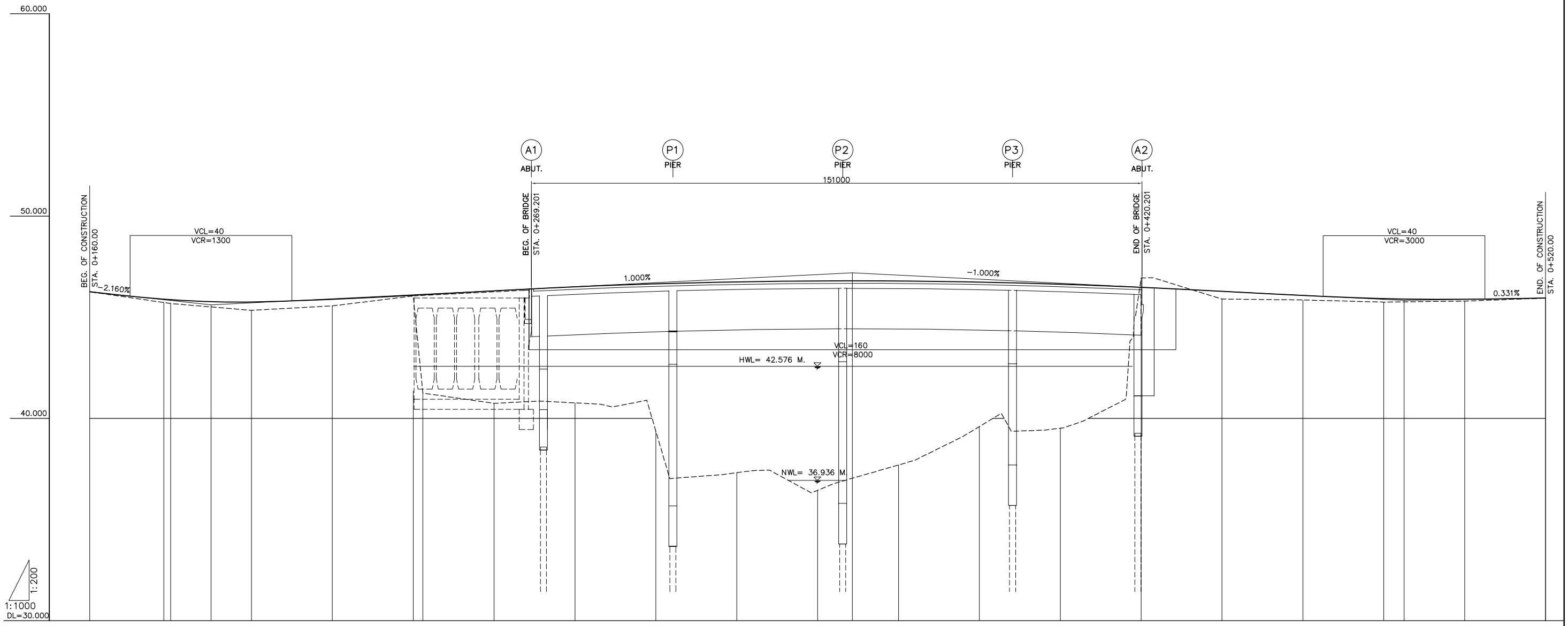

VERTICAL ALIGNMENT	46.260	i=-2.160% L=30.000	45.612	i=1.000% L=158.601	47.198	i=-1.000% L=136.399	45.834	i=0.331% L=35.000	45.950
PAVEMENT LEVEL	46.260	45.892 45.867	45.770	45.751	45.912	46.112 46.136	46.312	46.504	46.650	46.747	46.793	46.798	46.790	46.736	46.633	46.479	46.284	46.084	45.921	45.901	45.888	**45.950**
GROUND LEVEL	46.26	45.73 45.68	45.51	45.34	45.56	46.05 41.25	40.74	40.77	39.36	37.32	36.44	37.04	37.70	39.60	39.51	46.94	45.90	45.85	45.75	45.77	45.80	45.95
STATION	160.00	PC 180.00	190.00	200.00	220.00	240.00 PT	260.00	280.00	300.00	320.00	340.00	348.60	360.00	380.00	400.00	420.00	440.00	460.00	480.00	490.00	500.00	520.00
HORIZONTAL ALIGNMENT	R=∞ L=178.32	R=300 L=64.06	R=∞ L=279.77
SUPER-ELEVATION																						
WIDENING																						

DIRECTORATE GENERAL OF HIGHWAY MINISTRY OF PUBLIC WORKS THE REPUBLIC OF INDONESIA	JICA JAPAN INTERNATIONAL COOPERATION AGENCY	KATAHIRA & ENGINEERS INTERNATIONAL	THE BASIC DESIGN STUDY ON THE PROJECT FOR THE IMPROVEMENT OF BRIDGES IN NIAS ISLAND IN THE REPUBLIC OF INDONESIA	TITLE : IDANO GAWO BRIDGE APPROACH ROAD PROFILE	SCALE : H = 1:1000 V = 1:200	DRAWING No: 4-6 Rev.

NO.0K220.0000
GH=45.56
PH=45.912

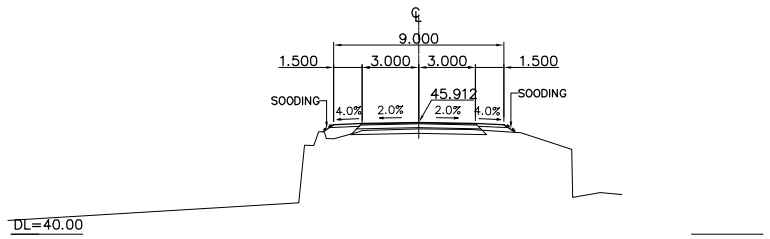

NO.0K440.0000
GH=45.90
PH=46.284

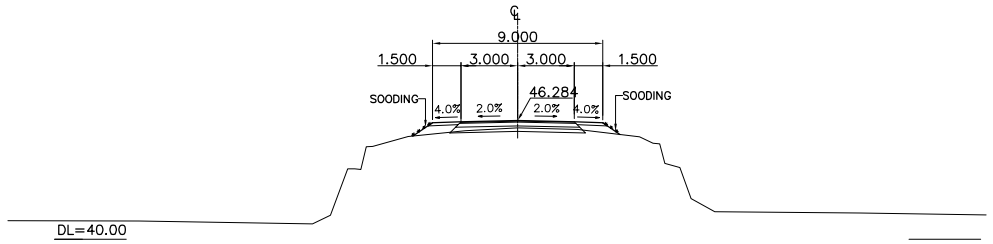

NO.0K520.0000
GH=45.95
PH=45.950

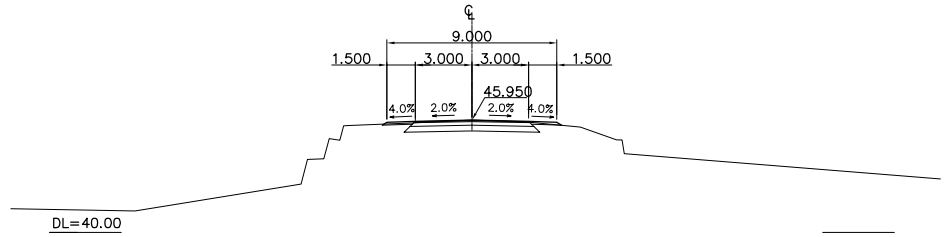

NO.0K200.0000
GH=45.34
PH=45.751

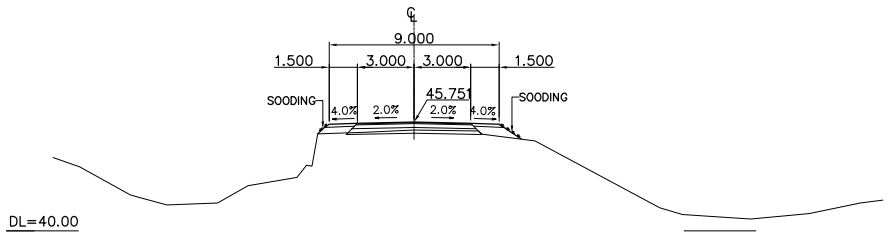

NO.0K423
GH=46.95
PH=46.508

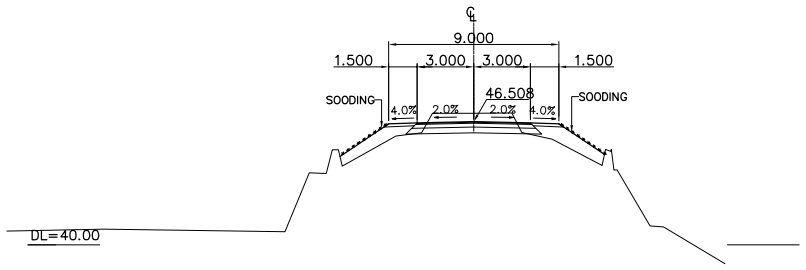

NO.0K500.0000
GH=45.80
PH=45.888

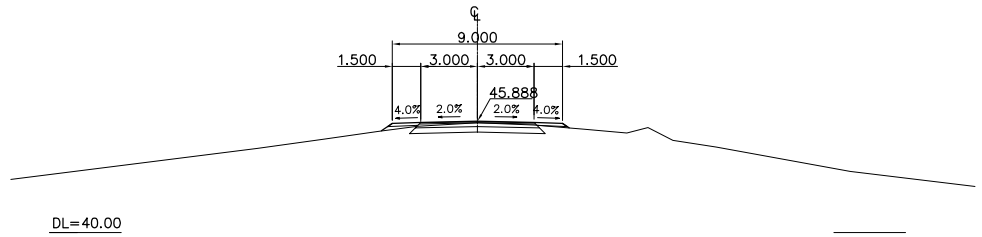

NO.0K480.0000
GH=45.75
PH=45.921

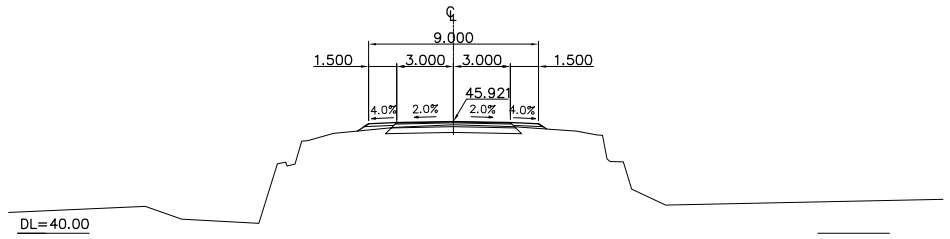

NO.0K180.0000
GH=45.68
PH=45.867

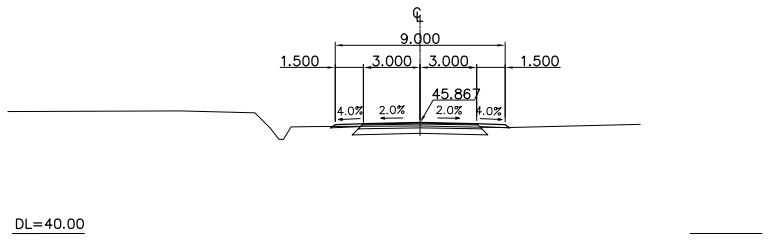

NO.0K240.0000
GH=46.05
PH=46.112

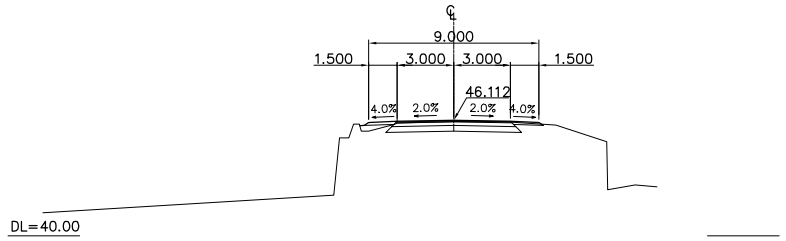

NO.0K460.0000
GH=45.85
PH=46.084

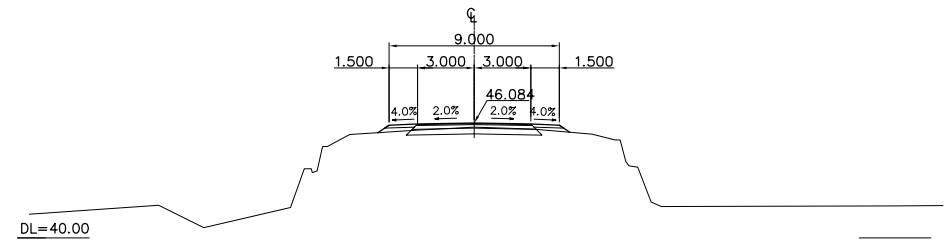

NO.0K160.0000
GH=46.26
PH=46.260

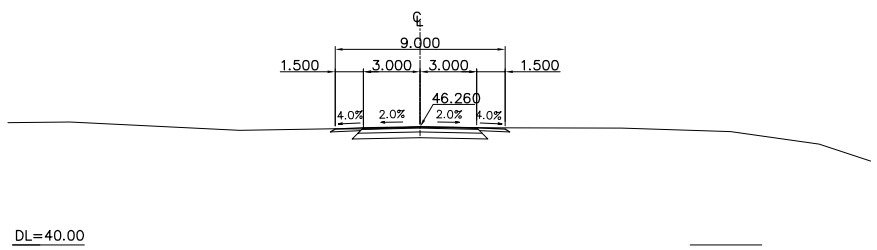

DIRECTORATE GENERAL OF HIGHWAY MINISTRY OF PUBLIC WORKS THE REPUBLIC OF INDONESIA	JICA JAPAN INTERNATIONAL COOPERATION AGENCY	KATAHIRA & ENGINEERS INTERNATIONAL	THE BASIC DESIGN STUDY ON THE PROJECT FOR THE IMPROVEMENT OF BRIDGES IN NIAS ISLAND IN THE REPUBLIC OF INDONESIA	TITLE : IDANO GAWO BRIDGE APPROACH ROAD CROSS SECTIONS	SCALE : 1 : 400	DRAWING No: 4-7 Rev.

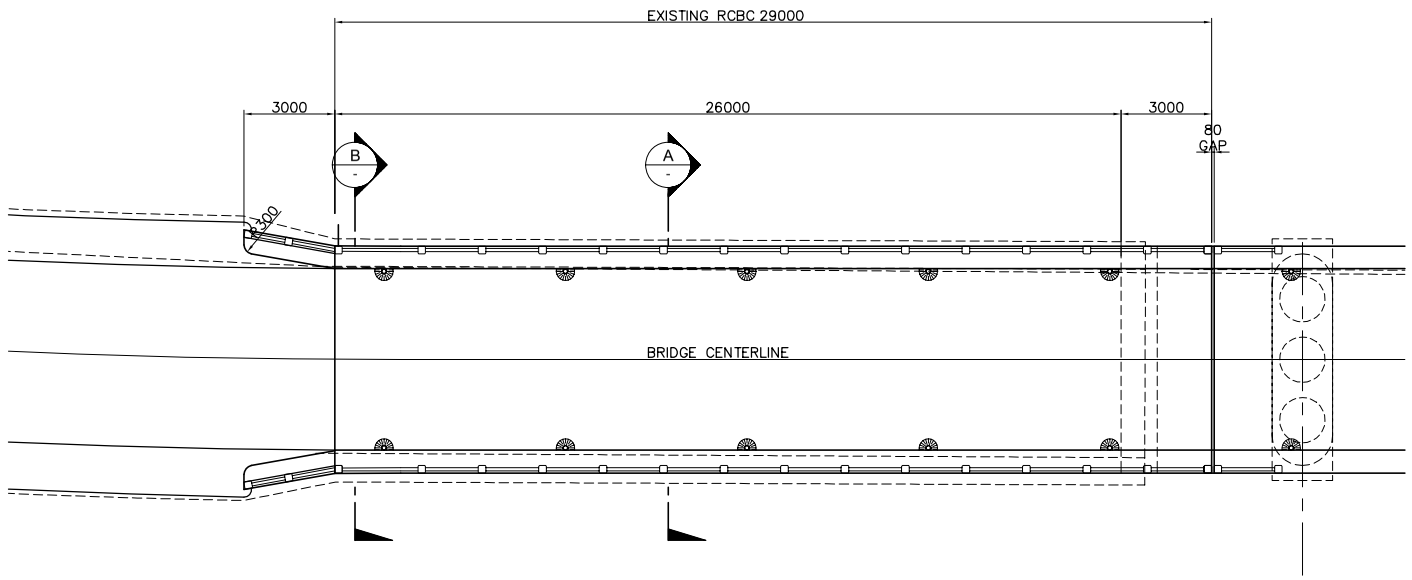

1 PLAN
SCALE 1:250

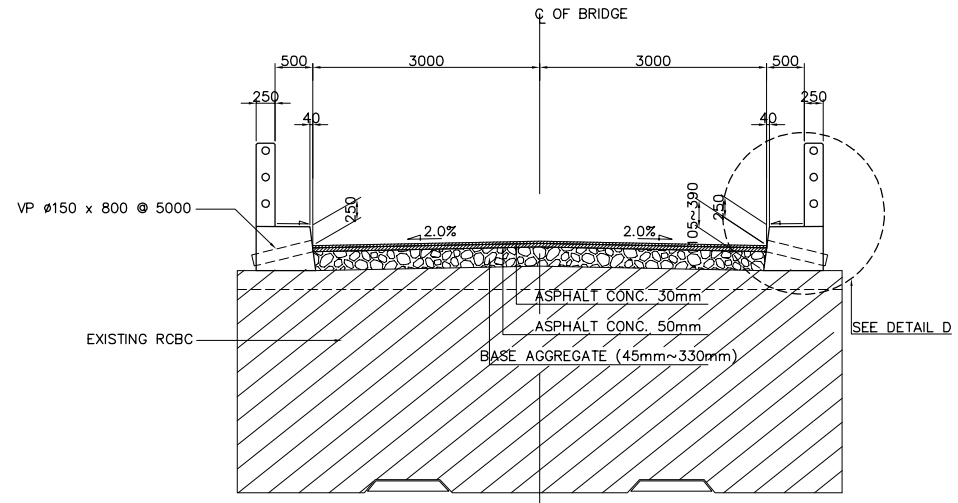

A SECTION
SCALE 1:100

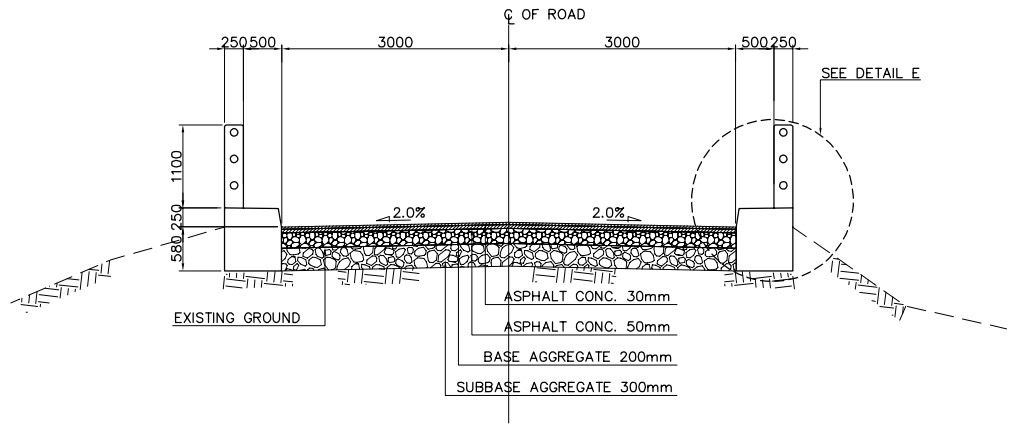

B SECTION
SCALE 1:100

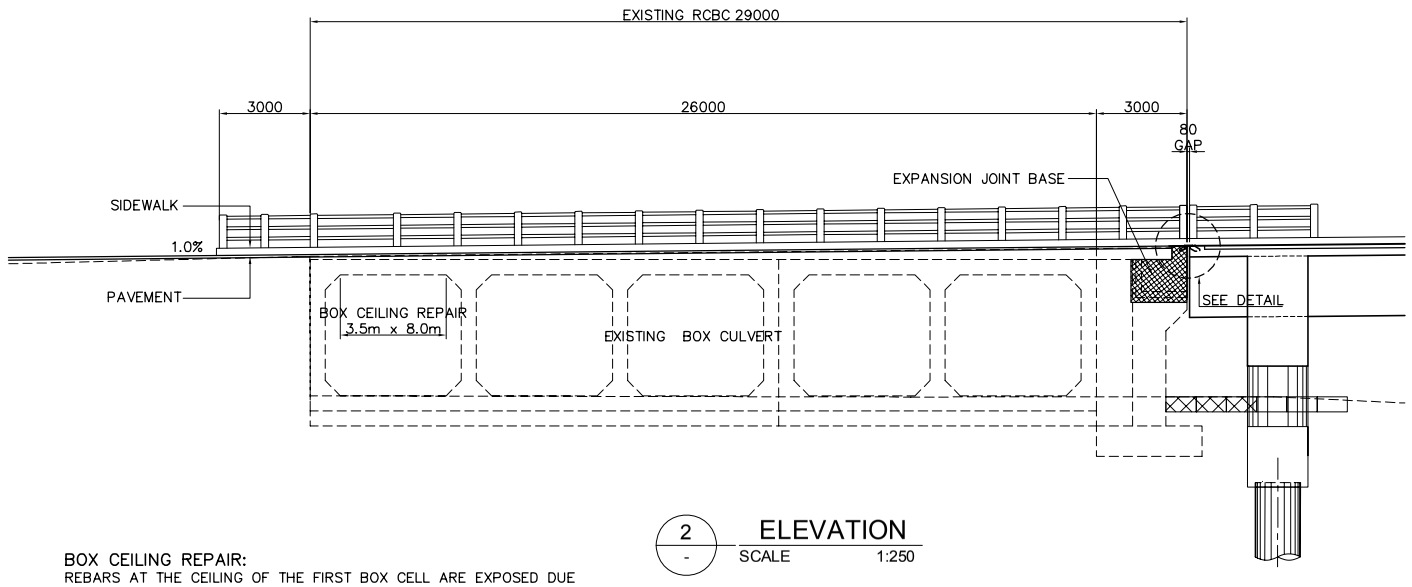

2 ELEVATION
SCALE 1:250

BOX CEILING REPAIR:
REBARS AT THE CEILING OF THE FIRST BOX CELL ARE EXPOSED DUE TO LACK OF CONCRETE COVER. THE CONCRETE AROUND THE EXPOSED BARS SHALL BE CHIPPED OFF AND EXPOSED THE CORRODED PORTION OF BARS. THEN, EPOXY RESIN SHALL BE PASTED TO PREVENT FURTHER CORROSION ON THE BARS.

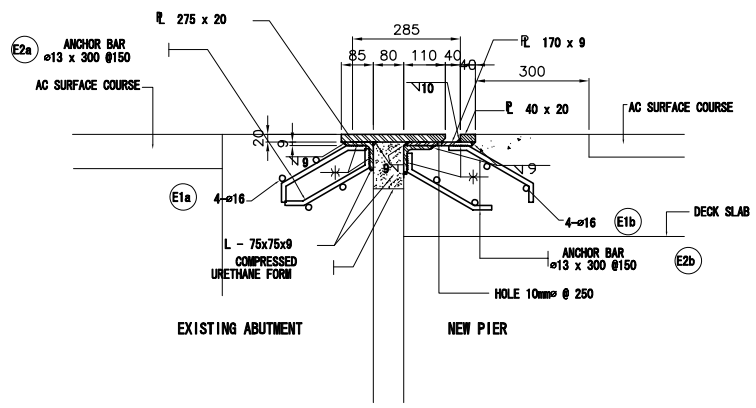

C EXPANSION JOINT DETAIL
SCALE 1:20

DIRECTORATE GENERAL OF HIGHWAY MINISTRY OF PUBLIC WORKS THE REPUBLIC OF INDONESIA	JICA JAPAN INTERNATIONAL COOPERATION AGENCY	KATAHIRA & ENGINEERS INTERNATIONAL	THE BASIC DESIGN STUDY ON THE PROJECT FOR THE IMPROVEMENT OF BRIDGES IN NIAS ISLAND IN THE REPUBLIC OF INDONESIA	TITLE : IDANO GAWO BRIDGE EXISTING RCBC REPAIR WORKS AND DETAILS (1/2)	SCALE : AS SHOWN	DRAWING No: 4-8 Rev.

NOTE:

1. 10mm PJF @ 10M. SHALL BE INSTALLED IN THE SIDEWALK.
2. S2 BARS SHALL BE CUT AT THE PJF.

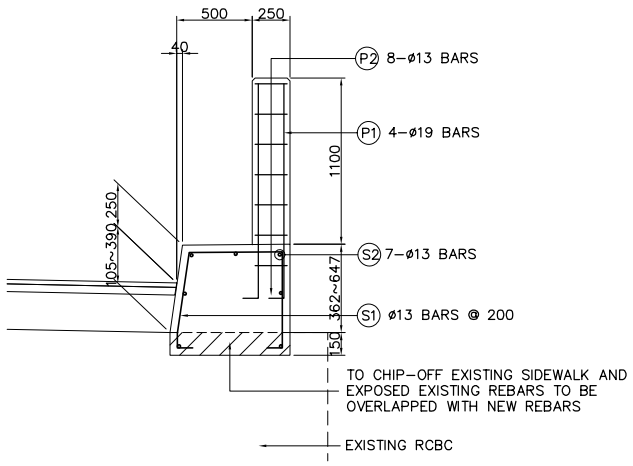

D - DETAIL OF SIDEWALK & RAILING @ BOX CULVERT
SCALE 1:50

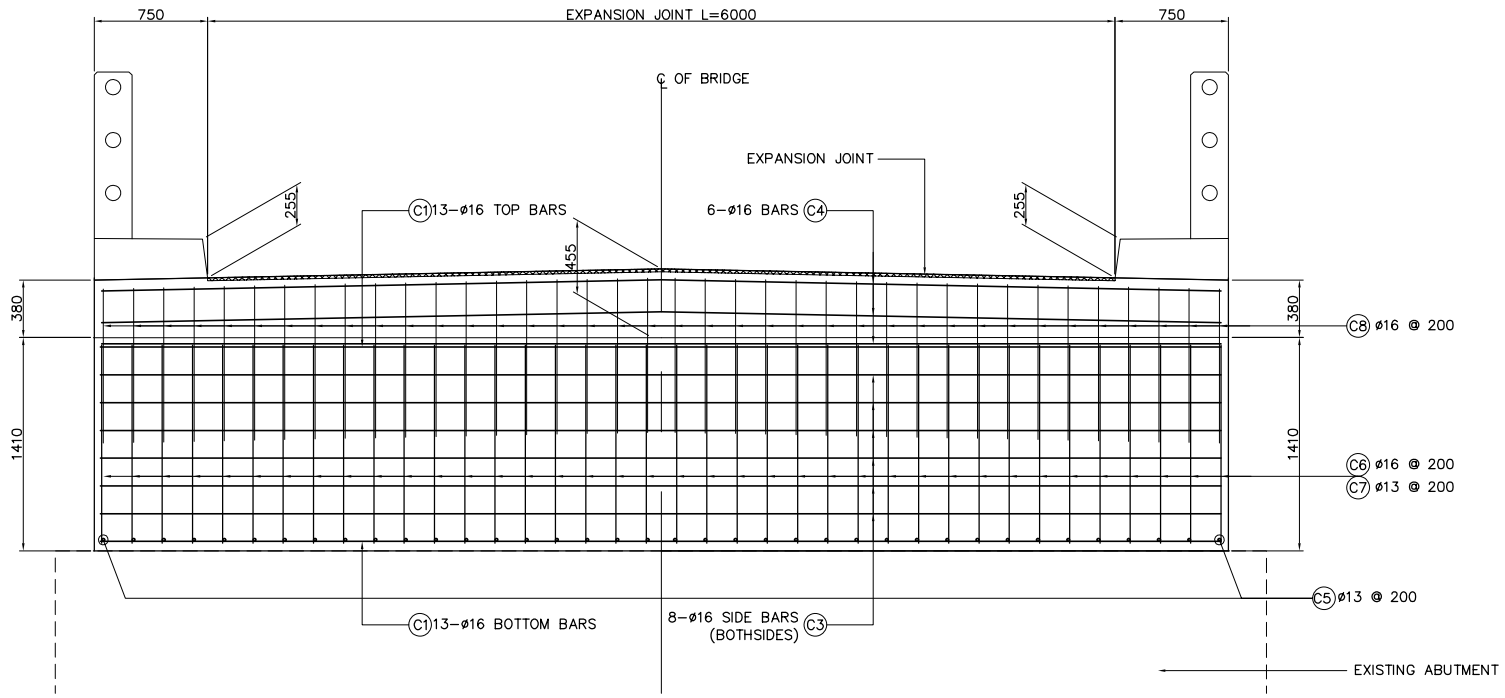

F - ELEVATION
SCALE 1:50

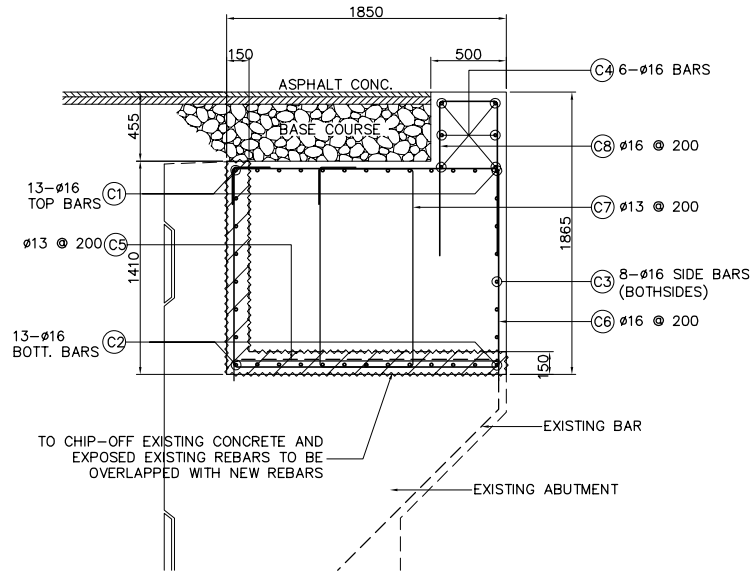

G - SECTION
SCALE 1:50

3 - DETAIL OF EXPANSION JOINT CONCRETE BASE
SCALE 1:50

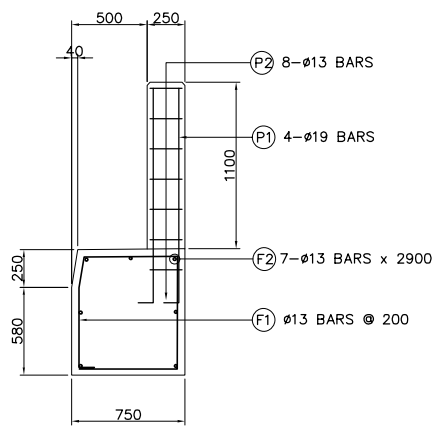

E - DETAIL OF SIDEWALK & RAILING @ APPROACH ROAD
SCALE 1:50

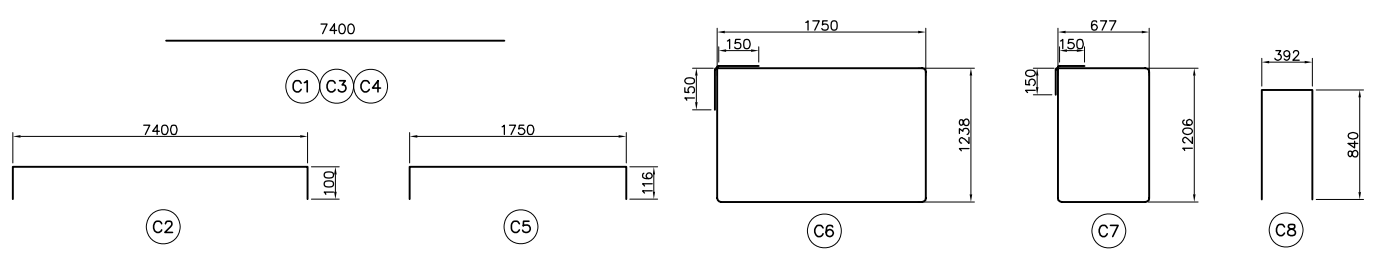

CONCRETE BASE

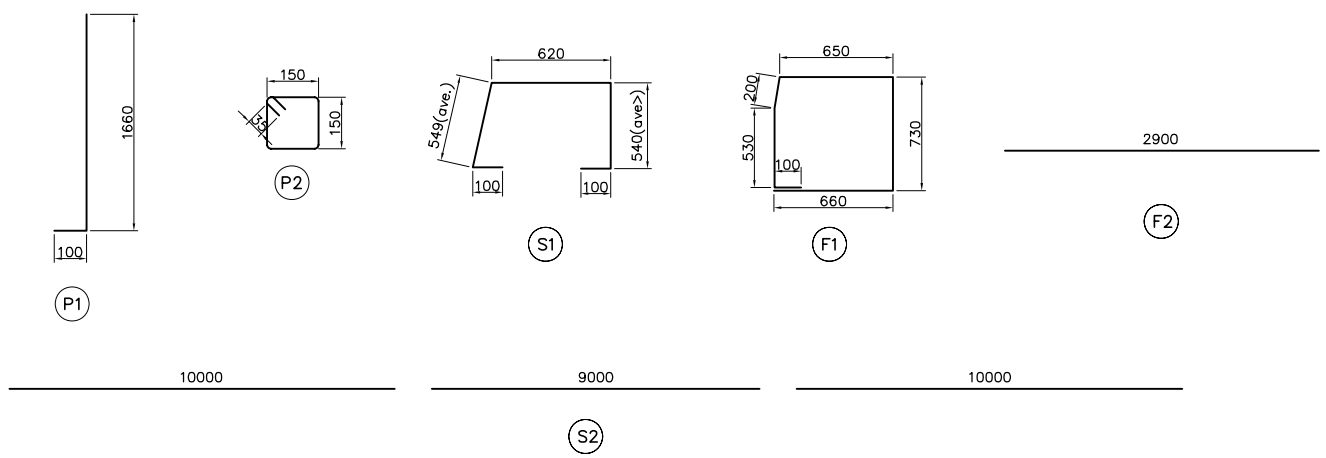

SIDEWALK AND RAILING

4 - BAR BENDING DIAGRAM
NOT TO SCALE

CONCRETE BASE

SCHEDULE OF REINFORCEMENT

BAR MARK	BAR SIZE	BAR LENGTH	QTY.	UNIT WT.	WT, PER BAR	TOTAL WT.
C1	16	7.400	13	1.578	16.47	151.84
C2	16	7.600	13	1.578	16.92	155.87
C3	16	7.400	16	1.578	16.47	186.89
C4	16	7.400	6	1.578	16.47	70.08
C5	13	1.982	38	1.042	3.13	78.66
C6	13	6.276	38	1.042	6.54	248.52
C7	13	4.066	38	1.042	4.24	161.12
C8	13	2.072	38	1.042	2.16	82.08

TOTAL = 1135.05Kgs

SIDEWALK AND RAIL POST @ BOX CULVERT

SCHEDULE OF REINFORCEMENT

BAR MARK	BAR SIZE	BAR LENGTH	QTY.	UNIT WT.	WT, PER BAR	TOTAL WT.
P1	19	1.760	120	2.226	3.92	470.40
P2	13	0.334	240	1.042	0.35	84.00
S1	13	1.909(ave.)	296	1.042	1.99	589.04
S2	13	29.000	14	1.042	30.218	423.052

TOTAL = 1543.82Kgs

SIDEWALK AND RAIL POST @ APPROACH ROAD

SCHEDULE OF REINFORCEMENT

BAR MARK	BAR SIZE	BAR LENGTH	QTY.	UNIT WT.	WT, PER BAR	TOTAL WT.
P1	19	1.760	16	2.226	3.92	62.72
P2	13	0.335	32	1.042	0.35	11.20
F1	13	2.770	32	1.042	2.89	92.48
F2	13	2.900	14	1.042	3.022	42.31

TOTAL = 134.79Kgs

DIRECTORATE GENERAL OF HIGHWAY MINISTRY OF PUBLIC WORKS THE REPUBLIC OF INDONESIA	JICA JAPAN INTERNATIONAL COOPERATION AGENCY	KATAHIRA & ENGINEERS INTERNATIONAL	THE BASIC DESIGN STUDY ON THE PROJECT FOR THE IMPROVEMENT OF BRIDGES IN NIAS ISLAND IN THE REPUBLIC OF INDONESIA	TITLE: IDANO GAWO BRIDGE EXISTING RCBC REPAIR WORKS AND DETAILS (2/2)	SCALE: AS SHOWN	DRAWING No: 4-9 Rev.

ELEMENTS OF CURVE												
PI NO.	STATION	COORDINATES		Δ	R	T	Lc	E	e%	W	V(kph)	REMARK
		NORTHING	EASTING									
PI-00	0+000.000	76360.159	377255.322	NO HORIZONTAL CURVE							–	
PI-01	0+023.375	76340.249	377243.076	39°00'18"	66.00	23.375	44.931	4.017	–	–	–	
PI-02	0+076.095	76322.132	377191.633	26°52'20"	50.00	11.945	23.450	1.407	4.00%	–	–	
PI-03	0+184.209	76239.135	377112.244	NO HORIZONTAL CURVE							–	
PI-04	0+150.00	76274.052	377091.643	NO HORIZONTAL CURVE							–	
PI-05	0+187.611	76241.106	377109.784	22°27'13"	50.00	9.925	19.594	0.975	–	–	–	
PI-06	0+277.609	76180.728	377185.129	52°34'32"	25.00	12.349	22.940	2.884	7.00%	–	–	
PI-07	0+320.00	76136.590	377184.140	NO HORIZONTAL CURVE							–	
PI-08	0+190.508	76239.135	377112.244	95°01'10"	12.00	13.10	19.901	5.766	2.00%	1.0		REFERENCE LINE

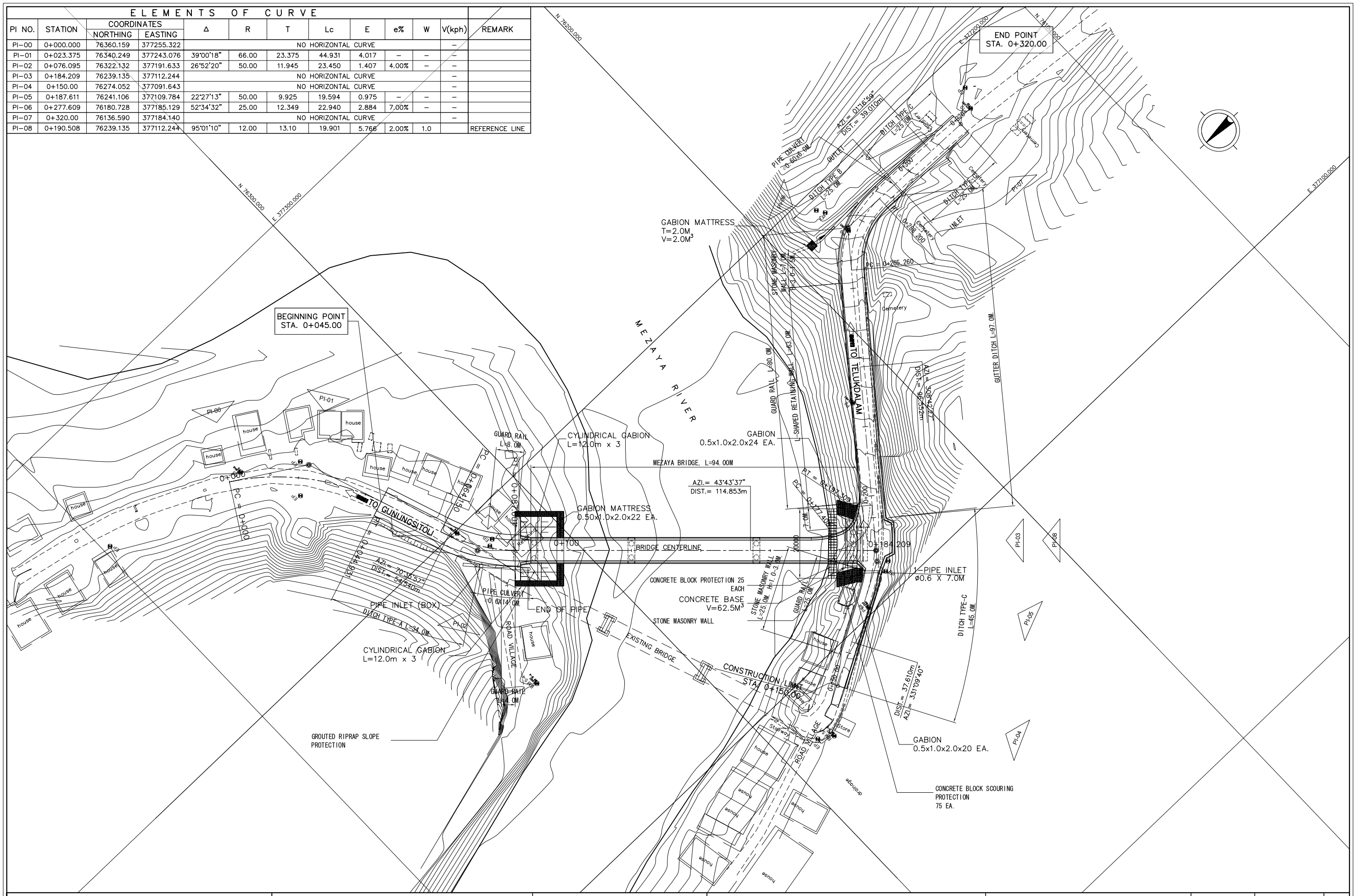

DIRECTORATE GENERAL OF HIGHWAY MINISTRY OF PUBLIC WORKS THE REPUBLIC OF INDONESIA	JICA JAPAN INTERNATIONAL COOPERATION AGENCY	KATAHIRA & ENGINEERS INTERNATIONAL	THE BASIC DESIGN STUDY ON THE PROJECT FOR THE IMPROVEMENT OF BRIDGES IN NIAS ISLAND IN THE REPUBLIC OF INDONESIA	TITLE : MEZAYA BRIDGE (GENERAL SITE PLAN)	SCALE : 1:1000	DRAWING No: 5-1 Rev.

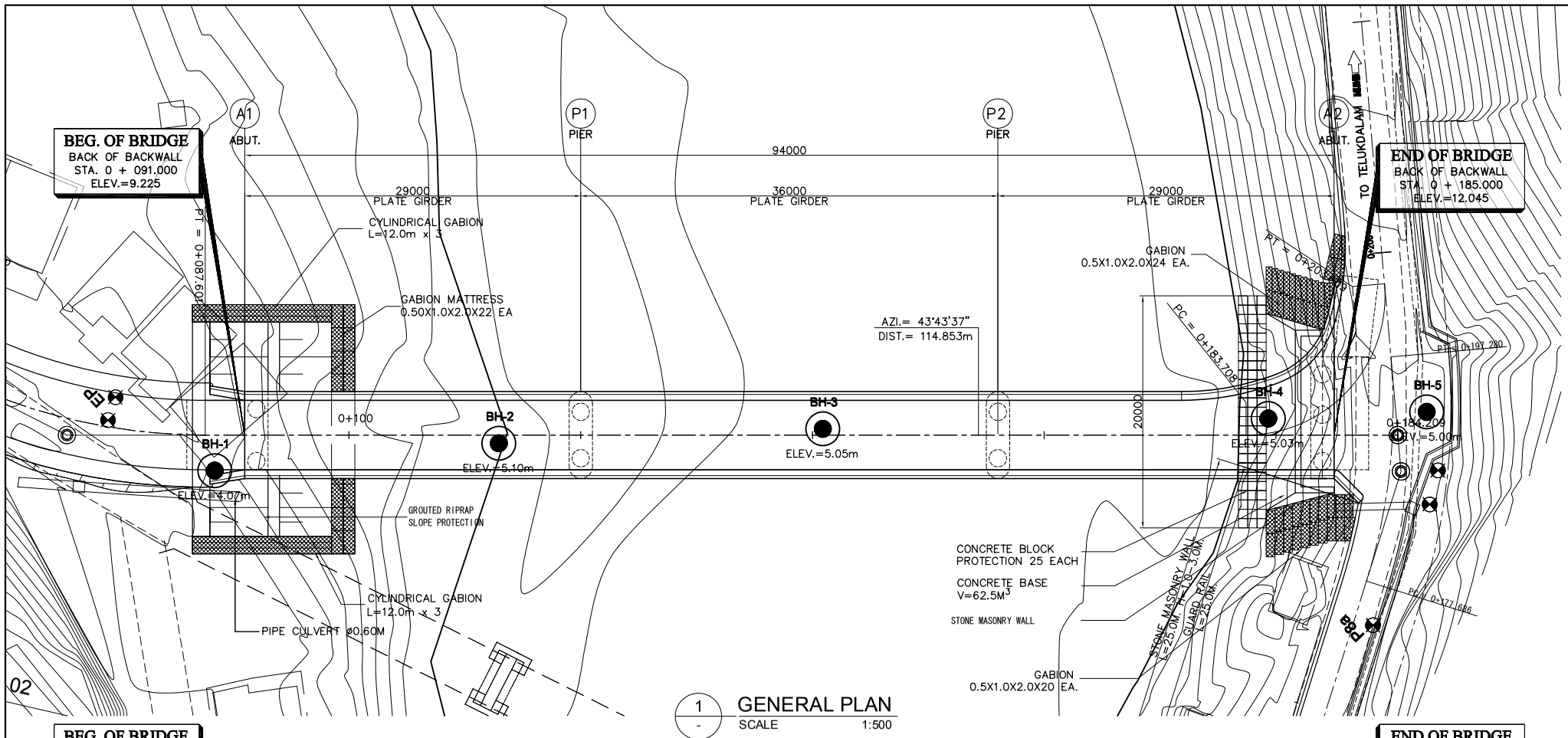

1 GENERAL PLAN
SCALE 1:500

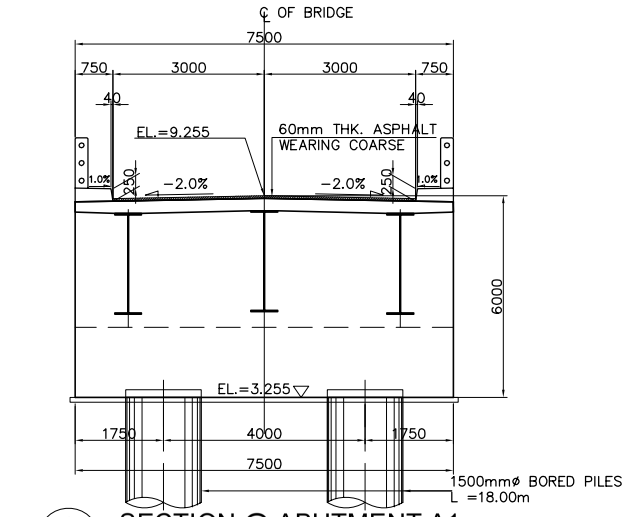

6 SECTION @ ABUTMENT A1
SCALE 1:150

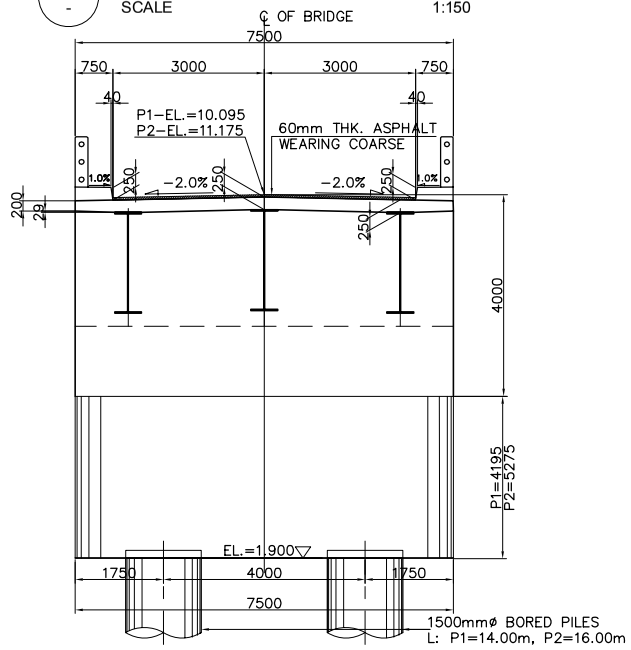

4 SECTION @ PIER
SCALE 1:150

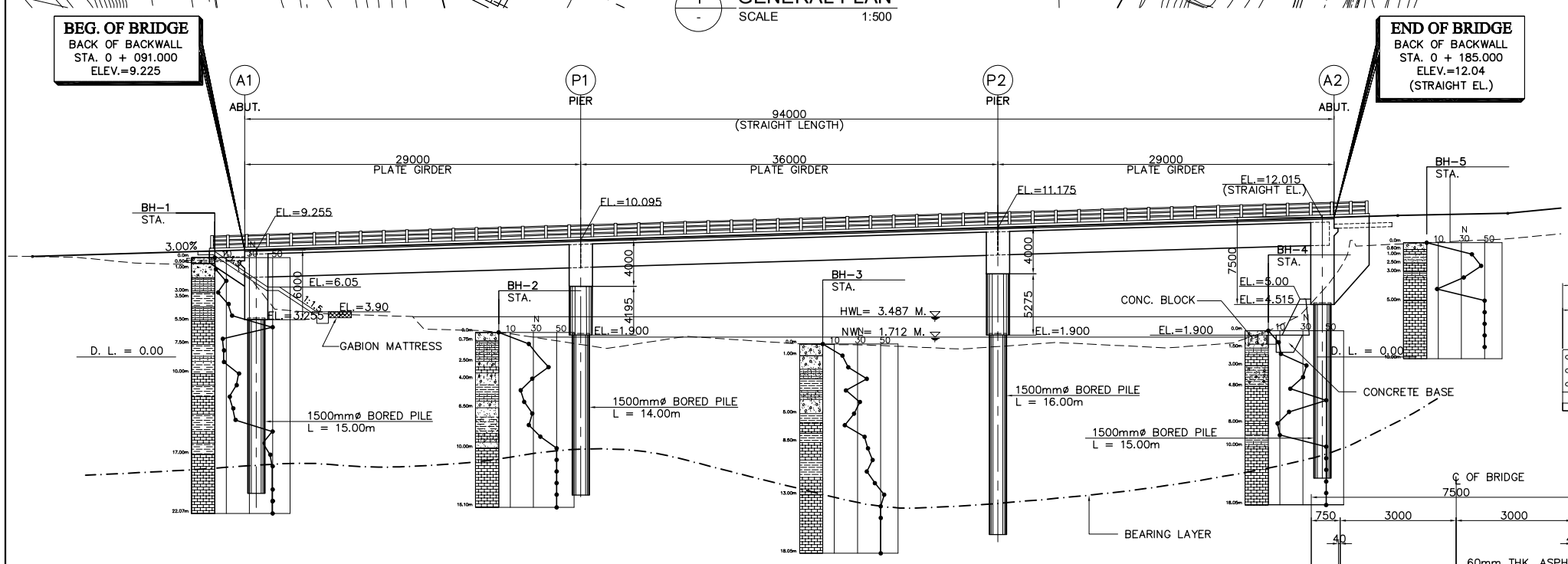

NOTE:
STRAIGHT EL. ARE ASSUMED IF BRIDGE IS STRAIGHT.
ACTUAL EL. ARE SHOWN IN ABUTMENT DETAIL.

2 GENERAL ELEVATION
SCALE 1:500

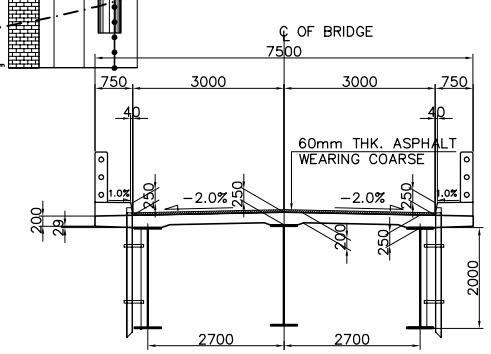

3 SECTION @ MID SPAN
SCALE 1:150

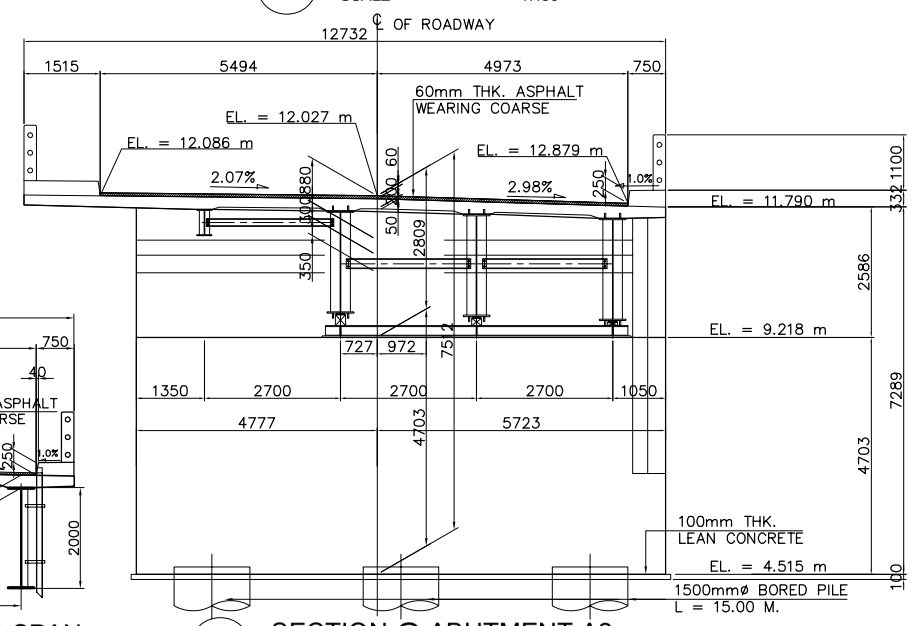

6 SECTION @ ABUTMENT A2
SCALE 1:150

DIRECTORATE GENERAL OF HIGHWAY MINISTRY OF PUBLIC WORKS THE REPUBLIC OF INDONESIA	JICA JAPAN INTERNATIONAL COOPERATION AGENCY	KEI KATAHIRA & ENGINEERS INTERNATIONAL	THE BASIC DESIGN STUDY ON THE PROJECT FOR THE IMPROVEMENT OF BRIDGES IN NIAS ISLAND IN THE REPUBLIC OF INDONESIA	TITLE : MEZAYA BRIDGE GENERAL VIEW	SCALE : AS SHOWN	DRAWING No: 5-2

Rev.

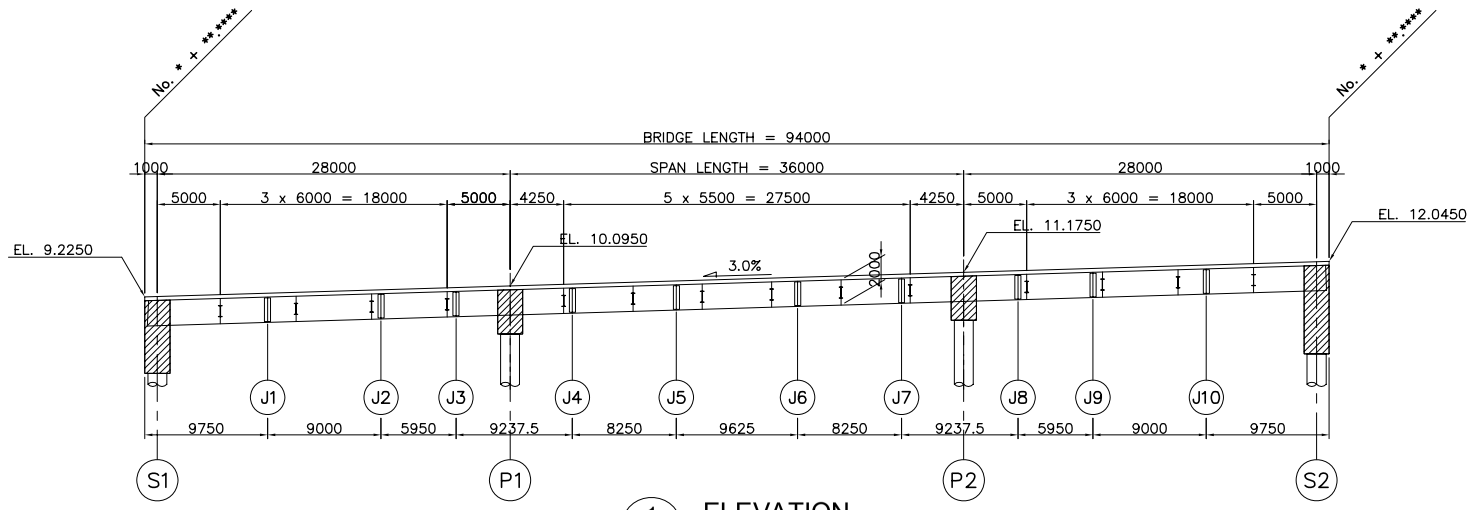

1 - ELEVATION
SCALE 1:300

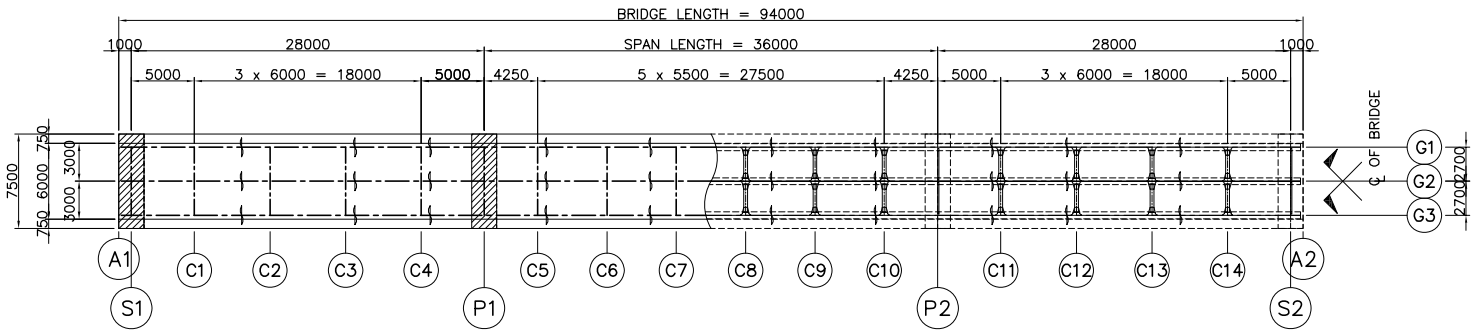

2 - P L A N
SCALE 1:300

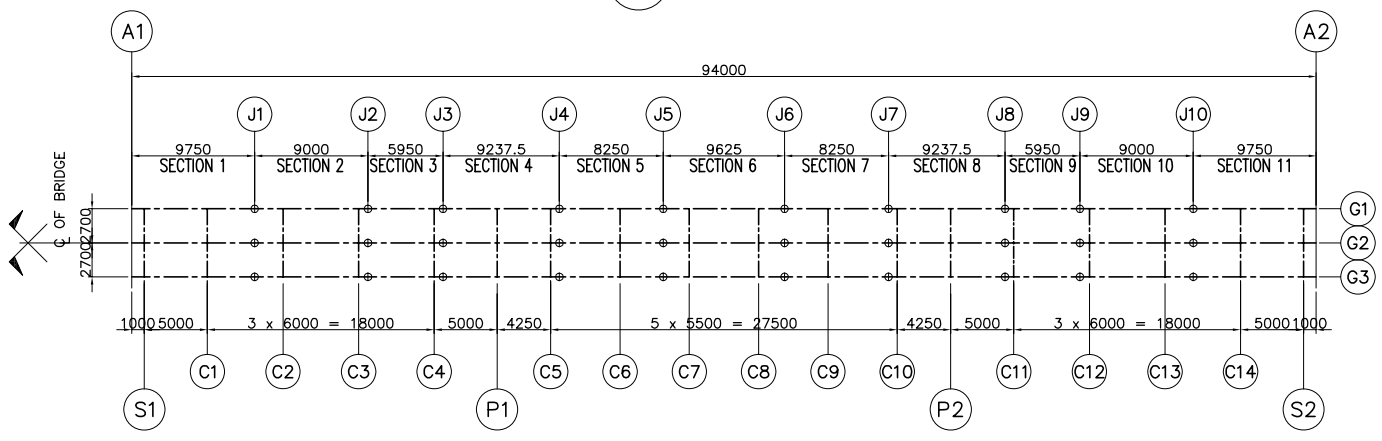

3 - KEY PLAN
SCALE 1:300

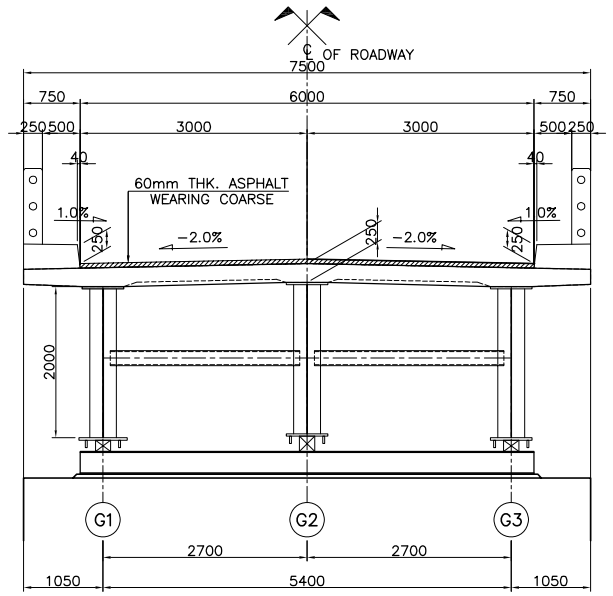

4 - SECTION @ S1, P1, P2, S2
SCALE 1:50

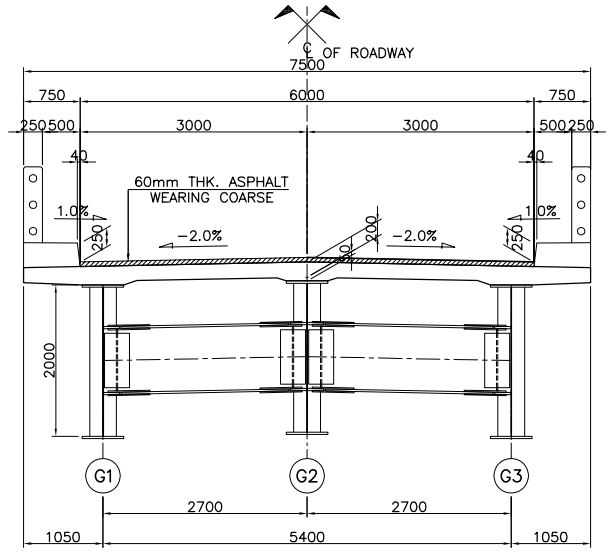

5 - SECTION @ C1~C14
SCALE 1:50

DIRECTORATE GENERAL OF HIGHWAY MINISTRY OF PUBLIC WORKS THE REPUBLIC OF INDONESIA	JICA JAPAN INTERNATIONAL COOPERATION AGENCY	KATAHIRA & ENGINEERS INTERNATIONAL	THE BASIC DESIGN STUDY ON THE PROJECT FOR THE IMPROVEMENT OF BRIDGES IN NIAS ISLAND IN THE REPUBLIC OF INDONESIA	TITLE : MEZAYA BRIDGE GEN. DIMENSION OF SUPERSTRUCTURE	SCALE : AS SHOWN	DRAWING No: 5-3

Rev.

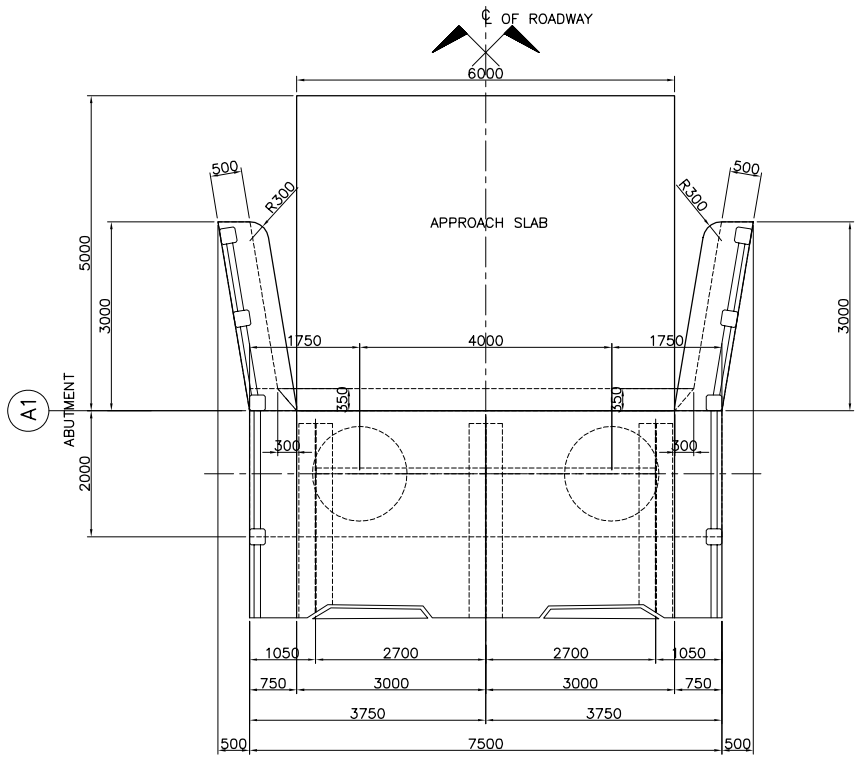

2 - PLAN
SCALE 1:60

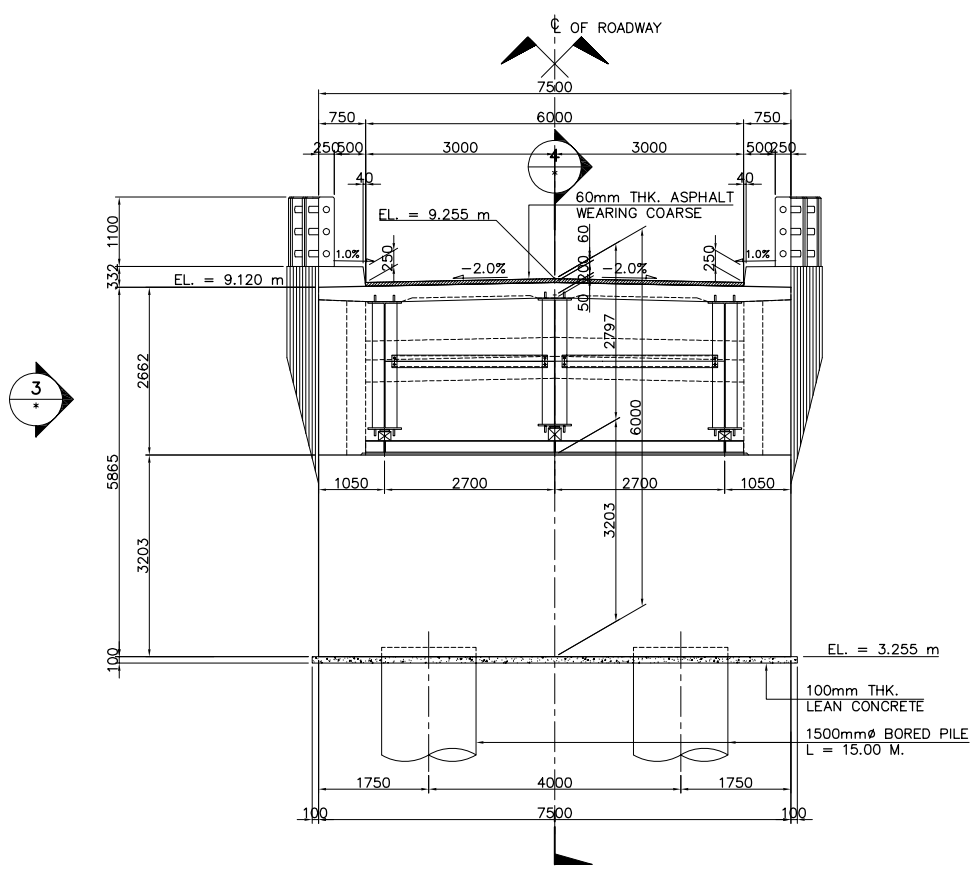

1 - ELEVATION
SCALE 1:60

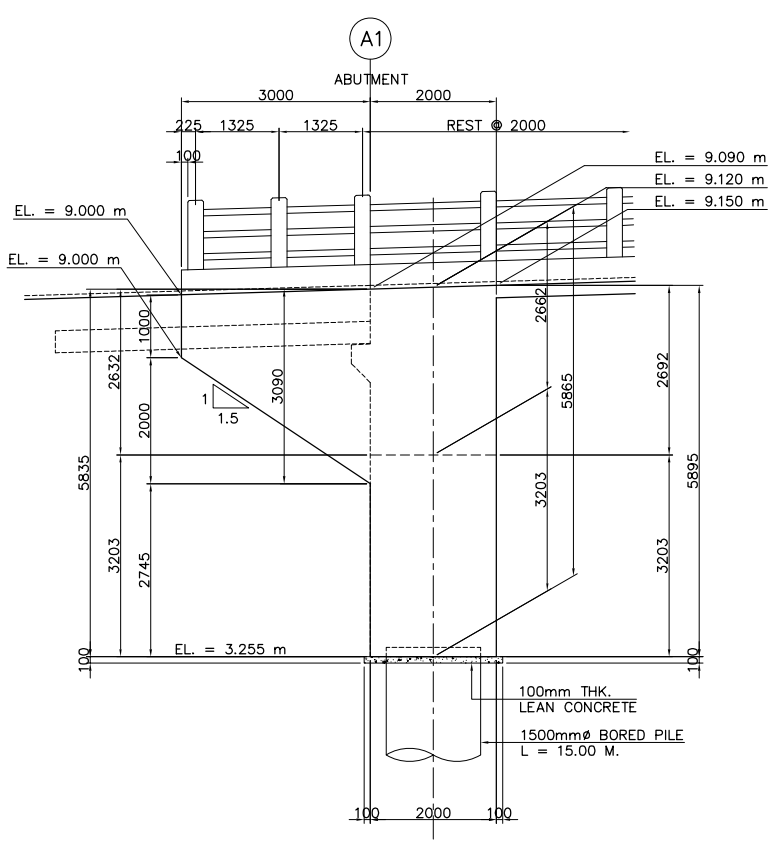

3 - ELEVATION
SCALE 1:60

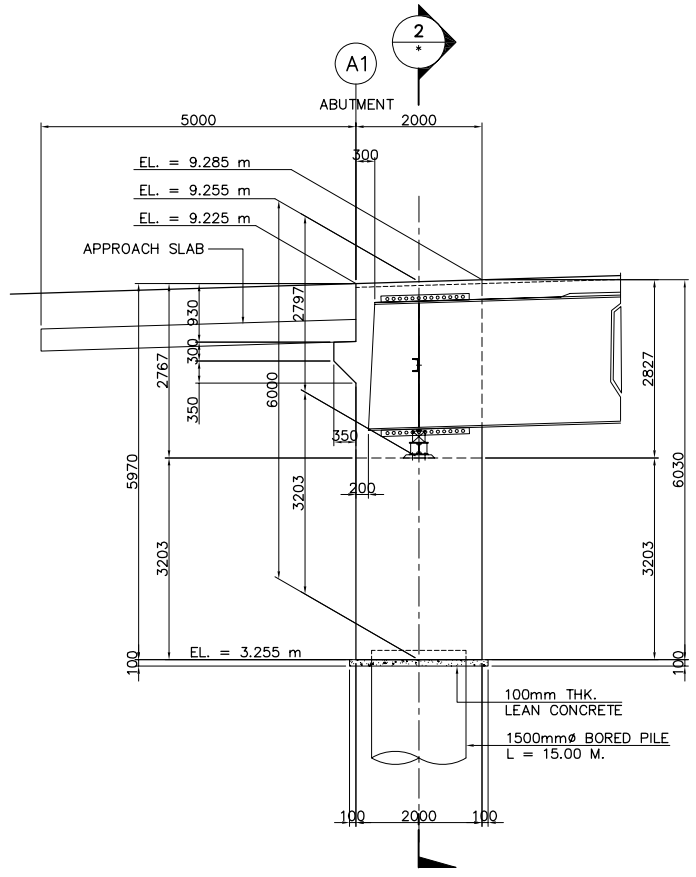

4 - ELEVATION
SCALE 1:60

DIRECTORATE GENERAL OF HIGHWAY MINISTRY OF PUBLIC WORKS THE REPUBLIC OF INDONESIA	JICA JAPAN INTERNATIONAL COOPERATION AGENCY	KATAHIRA & ENGINEERS INTERNATIONAL	THE BASIC DESIGN STUDY ON THE PROJECT FOR THE IMPROVEMENT OF BRIDGES IN NIAS ISLAND IN THE REPUBLIC OF INDONESIA	TITLE : MEZAYA BRIDGE SUBSTRUCTURE STRUCTURAL DIMENSION (ABUTMENT A1)	SCALE : AS SHOWN	DRAWING No: 5-4 Rev.

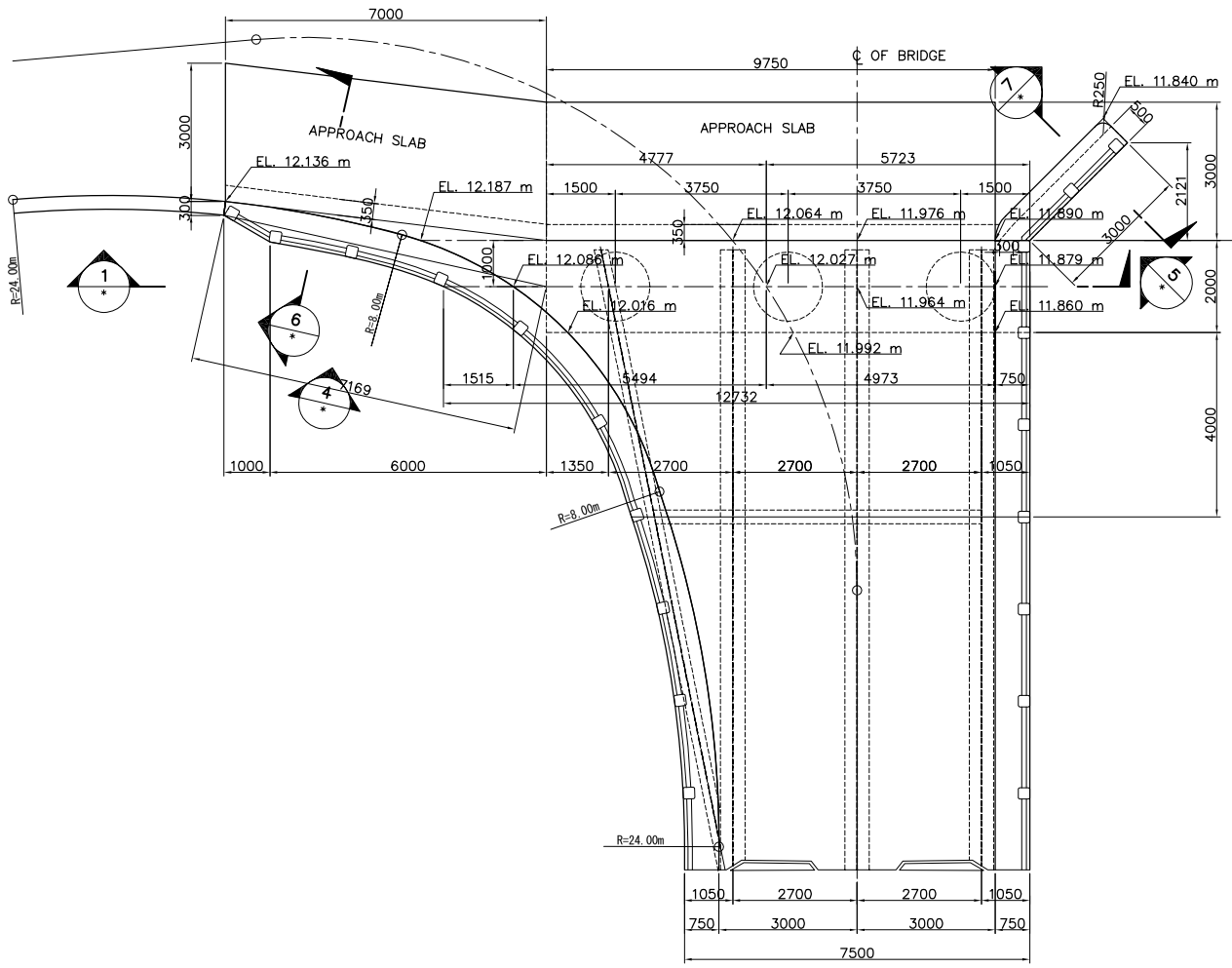

2 - PLAN
SCALE 1:80

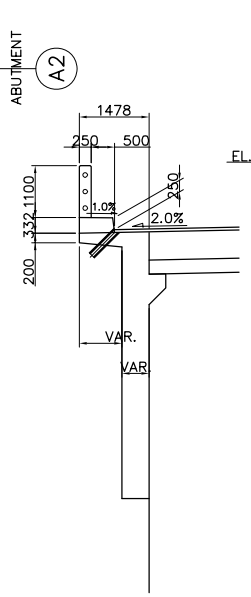

6 - SECTION
SCALE 1:80

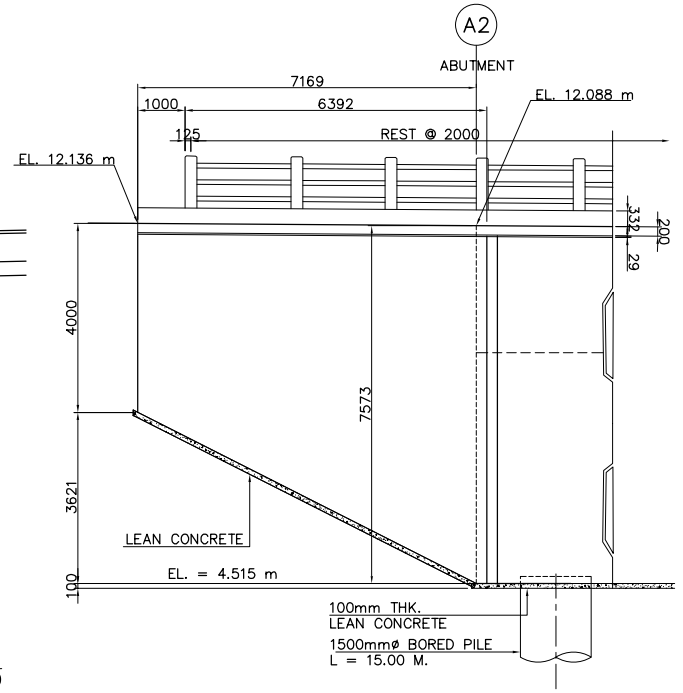

4 - WING WALL ELEVATION
SCALE 1:80

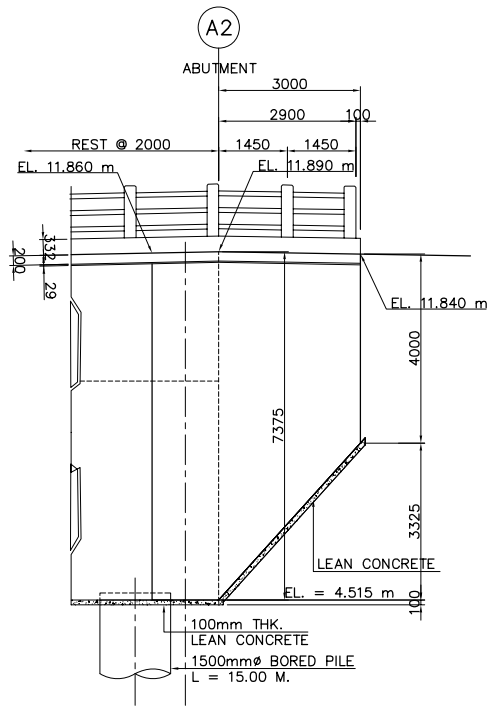

5 - WING WALL ELEVATION
SCALE 1:80

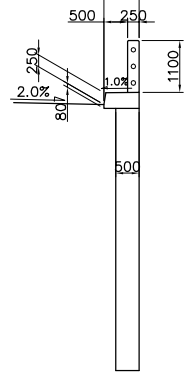

7 - SECTION
SCALE 1:80

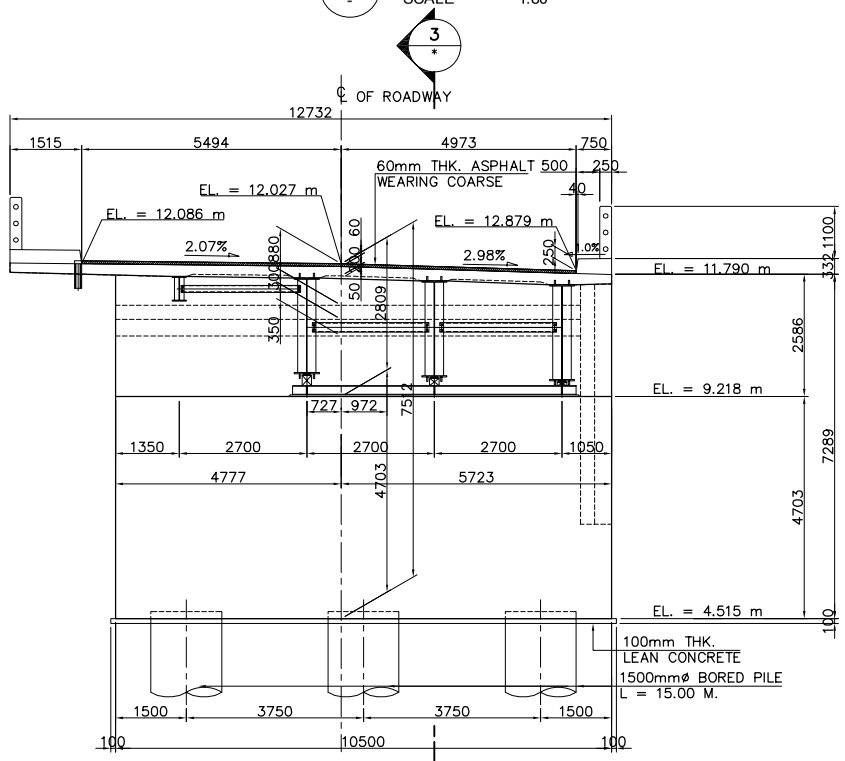

1 - ELEVATION
SCALE 1:80

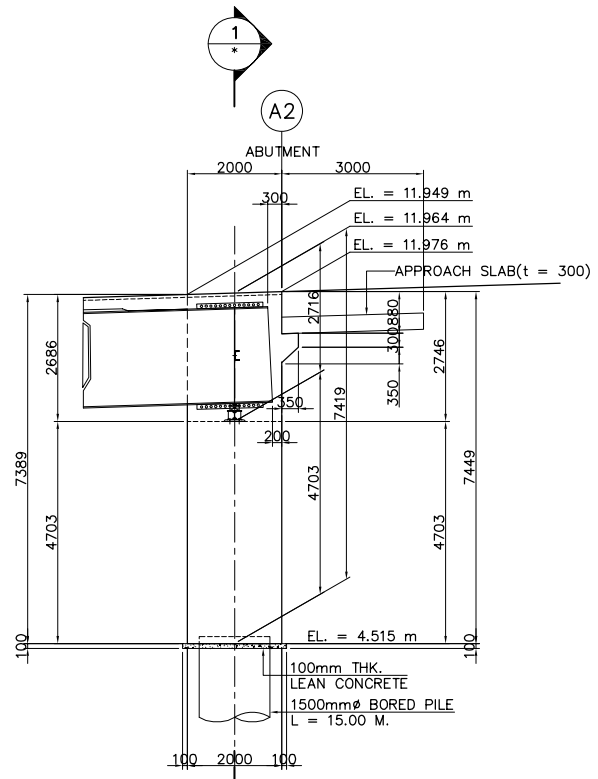

3 - ELEVATION
SCALE 1:60

DIRECTORATE GENERAL OF HIGHWAY MINISTRY OF PUBLIC WORKS THE REPUBLIC OF INDONESIA	JICA JAPAN INTERNATIONAL COOPERATION AGENCY	KATAHIRA & ENGINEERS INTERNATIONAL	THE BASIC DESIGN STUDY ON THE PROJECT FOR THE IMPROVEMENT OF BRIDGES IN NIAS ISLAND IN THE REPUBLIC OF INDONESIA	TITLE : MEZAYA BRIDGE SUBSTRUCTURE STRUCTURAL DIMENSION (ABUTMENT A2)	SCALE : AS SHOWN	DRAWING No: 5-5 Rev.

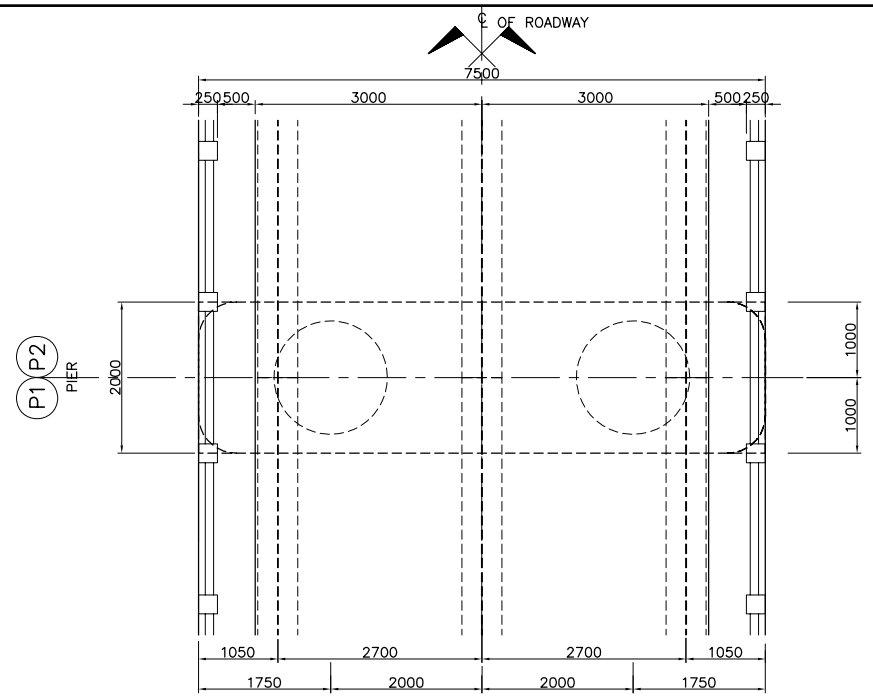

1 PLAN
SCALE 1:50

TABLE OF DIMENSIONS										
STRUCTURE	EL. A	EL. B	EL. C	L1	L2	L3	L4	L5	L6	L7
PIER P1	10.095	9.960	1.900	8195	8060	2808	1192	4195	2673	5387
PIER P2	11.175	11.040	1.900	9275	9140	2805	1195	5275	2670	6467

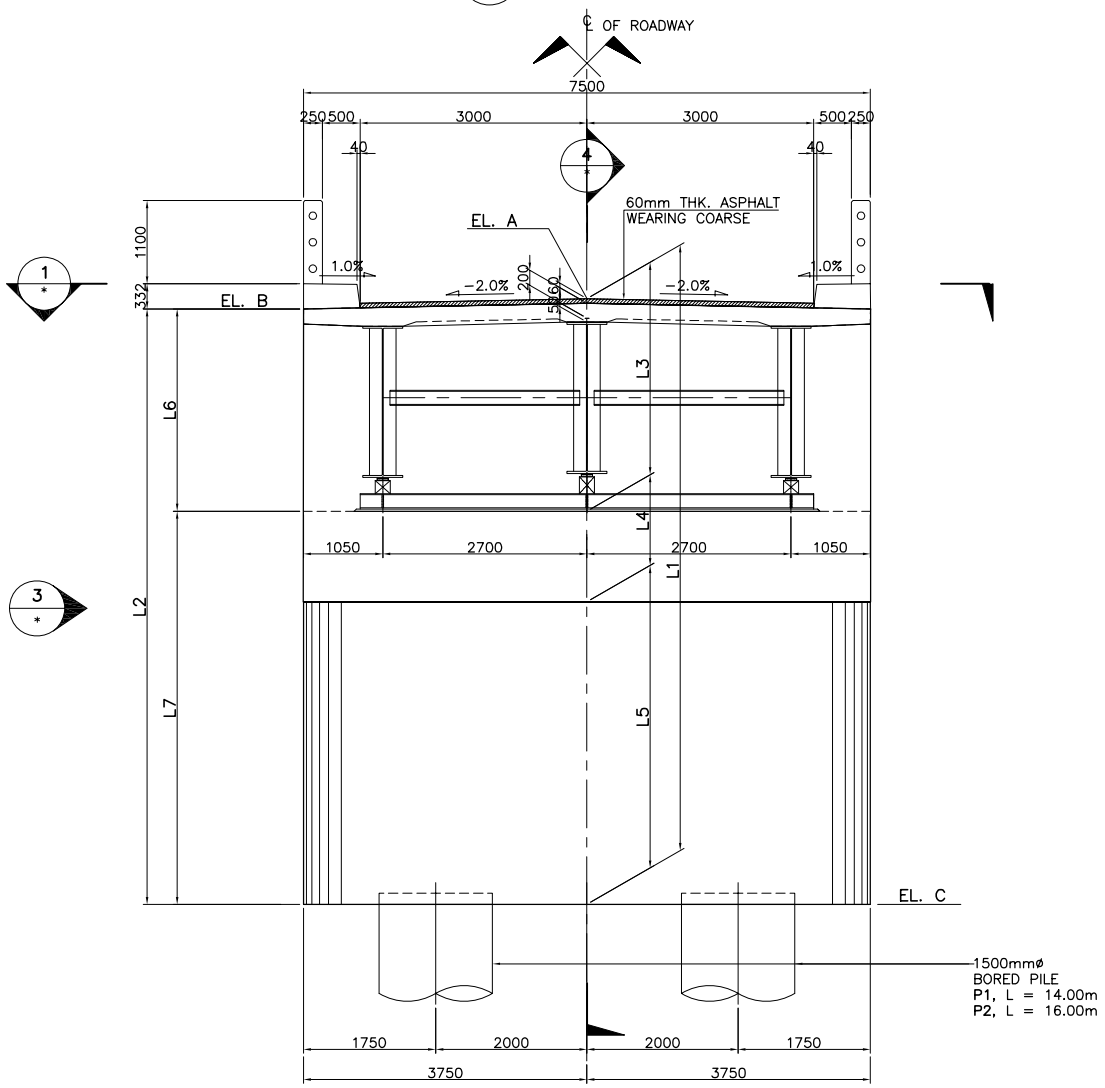

2 ELEVATION
SCALE 1:50

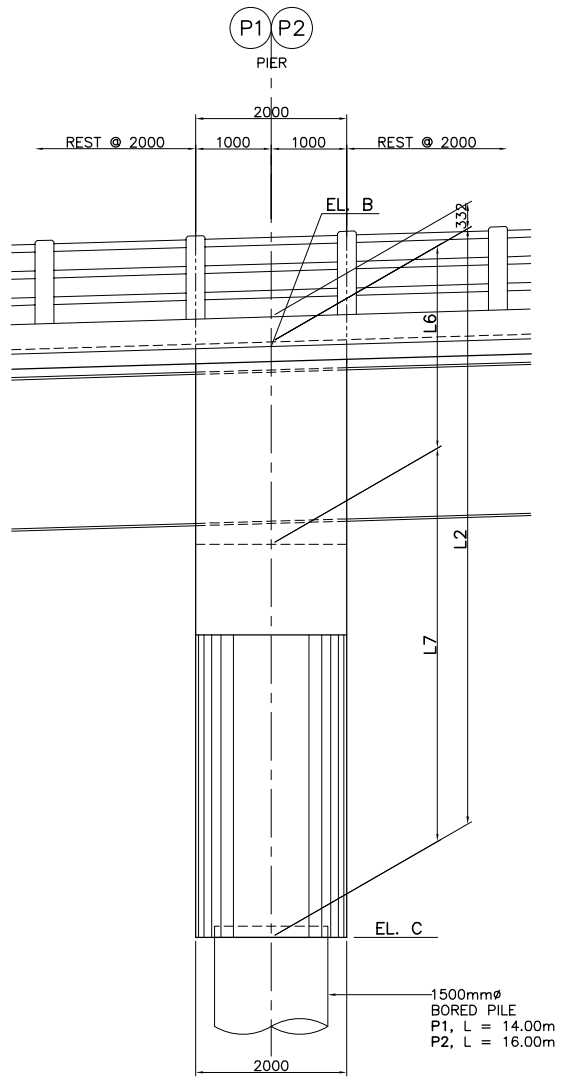

3 ELEVATION
SCALE 1:50

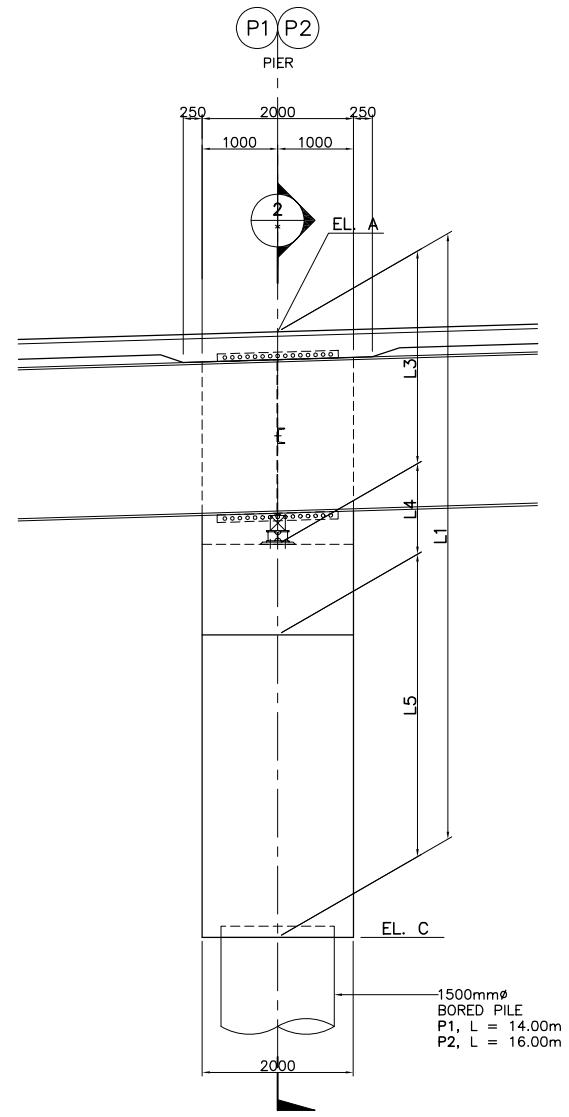

4 ELEVATION
SCALE 1:50

DIRECTORATE GENERAL OF HIGHWAY MINISTRY OF PUBLIC WORKS THE REPUBLIC OF INDONESIA	JICA JAPAN INTERNATIONAL COOPERATION AGENCY	KATAHIRA & ENGINEERS INTERNATIONAL	THE BASIC DESIGN STUDY ON THE PROJECT FOR THE IMPROVEMENT OF BRIDGES IN NIAS ISLAND IN THE REPUBLIC OF INDONESIA	TITLE : MEZAYA BRIDGE SUBSTRUCTURE STRUCTURAL DIMENSION (PIER P1 & P2)	SCALE : AS SHOWN	DRAWING No: 5-6 Rev.

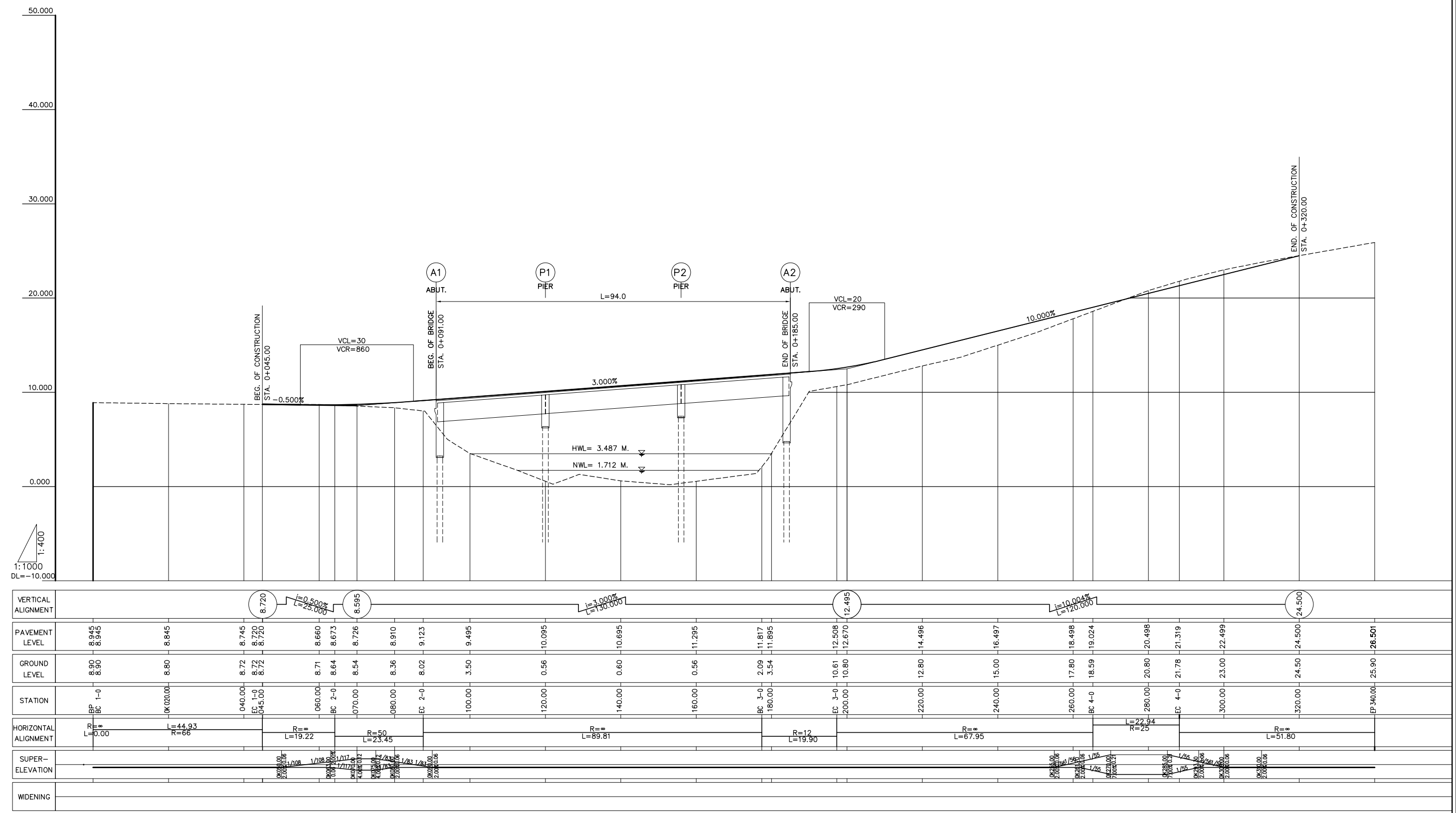

DIRECTORATE GENERAL OF HIGHWAY MINISTRY OF PUBLIC WORKS THE REPUBLIC OF INDONESIA	JICA JAPAN INTERNATIONAL COOPERATION AGENCY	KATAHIRA & ENGINEERS INTERNATIONAL	THE BASIC DESIGN STUDY ON THE PROJECT FOR THE IMPROVEMENT OF BRIDGES IN NIAS ISLAND IN THE REPUBLIC OF INDONESIA	TITLE : MEZAYA BRIDGE APPROACH ROAD PROFILE	SCALE : H = 1:1000 V = 1:400	DRAWING No: 5-7 Rev.

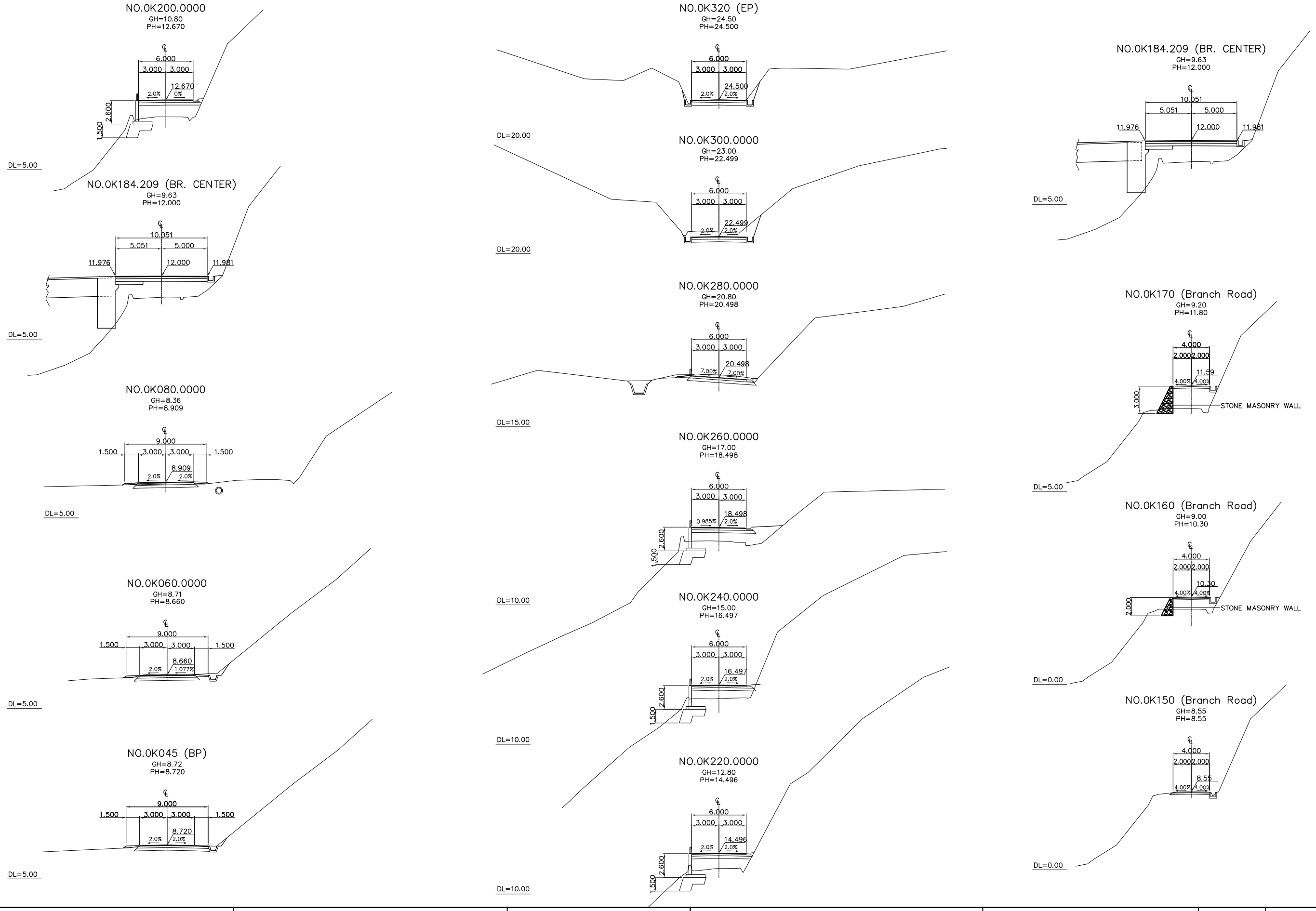

DIRECTORATE GENERAL OF HIGHWAY MINISTRY OF PUBLIC WORKS THE REPUBLIC OF INDONESIA	JICA JAPAN INTERNATIONAL COOPERATION AGENCY	KATAHIRA & ENGINEERS INTERNATIONAL	THE BASIC DESIGN STUDY ON THE PROJECT FOR THE IMPROVEMENT OF BRIDGES IN NIAS ISLAND IN THE REPUBLIC OF INDONESIA	TITLE : MEZAYA BRIDGE APPROACH ROAD CROSS SECTIONS	SCALE : AS SHOWN	DRAWING No: 5-8

Rev.

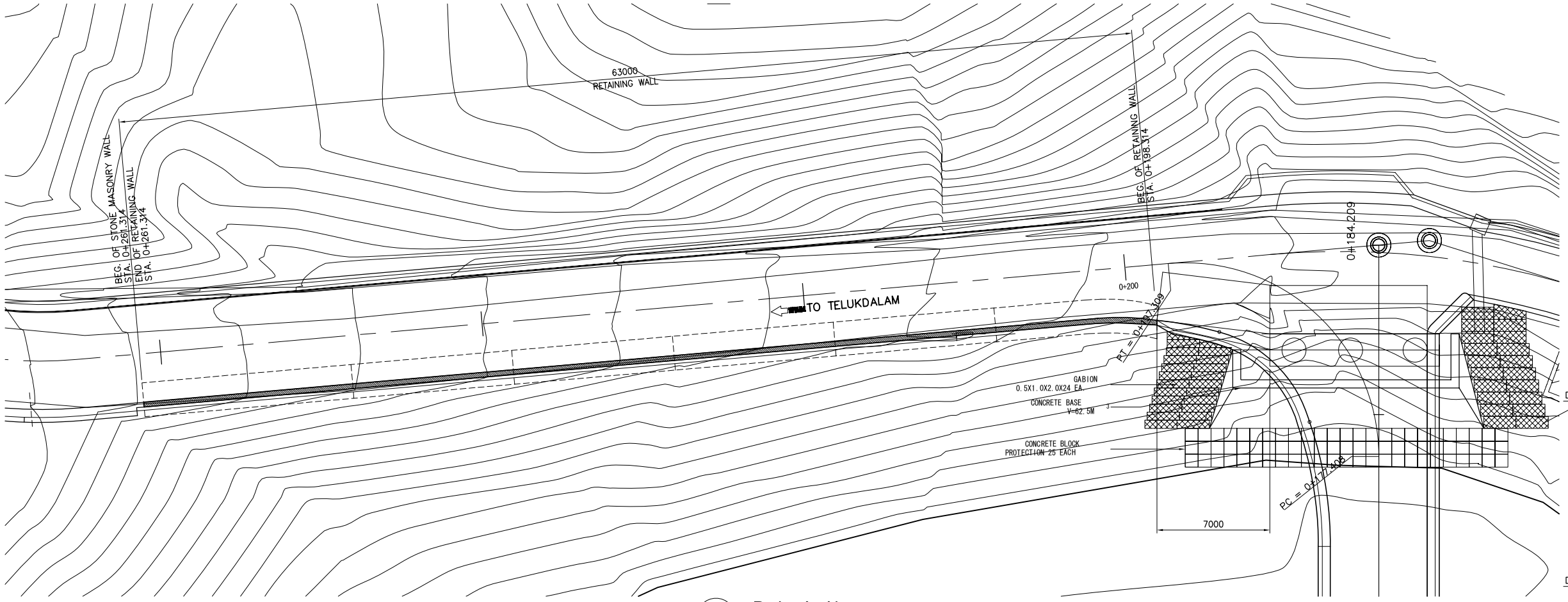

1 PLAN
SCALE 1:150

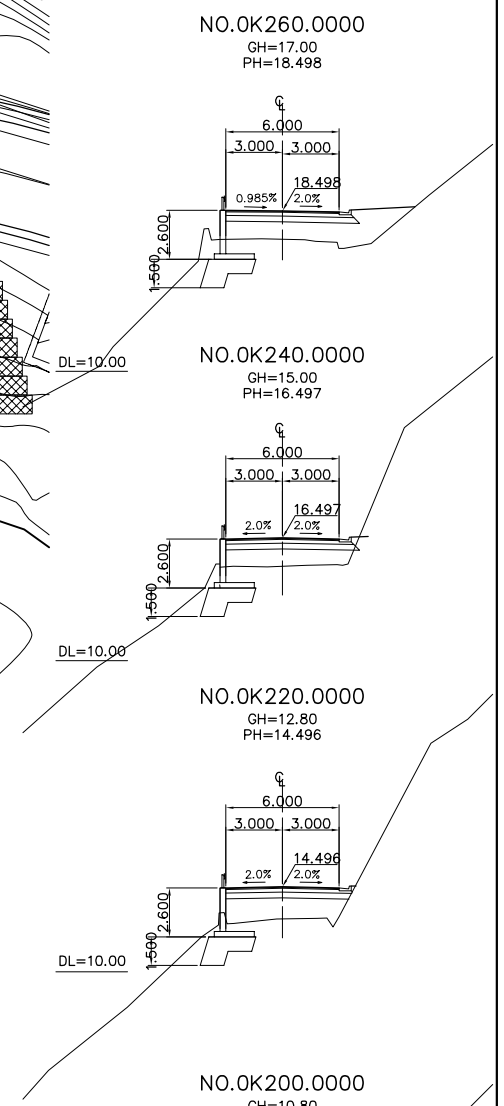

3 CROSS SECTION
SCALE 1:200

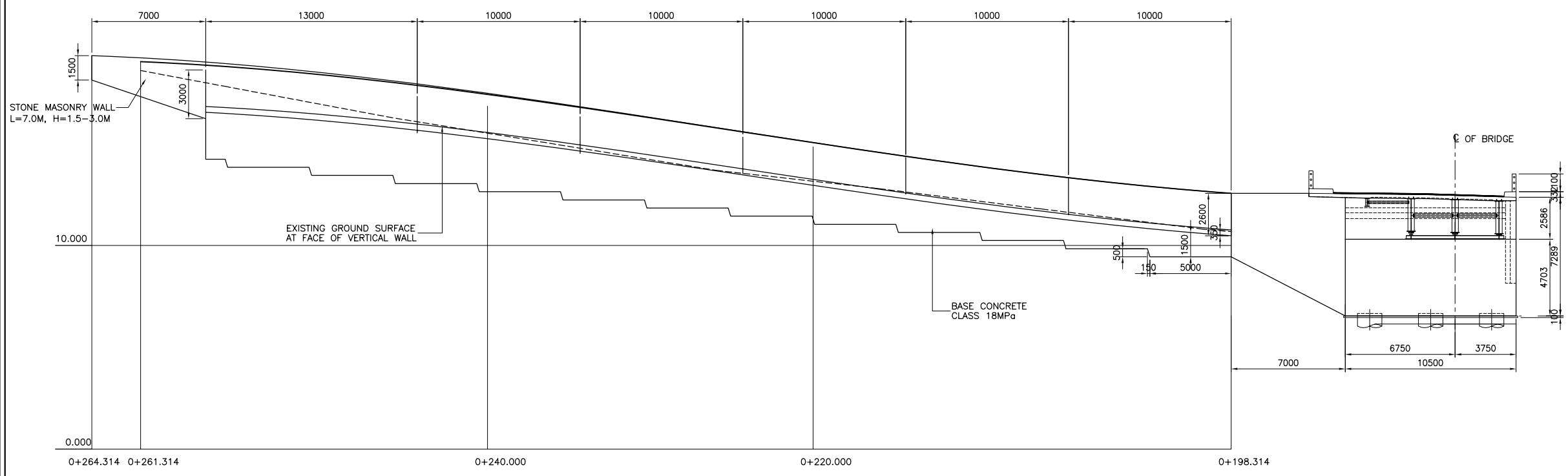

2 PROFILE
SCALE 1:150

DIRECTORATE GENERAL OF HIGHWAY MINISTRY OF PUBLIC WORKS THE REPUBLIC OF INDONESIA	JICA JAPAN INTERNATIONAL COOPERATION AGENCY	KATAHIRA & ENGINEERS INTERNATIONAL	THE BASIC DESIGN STUDY ON THE PROJECT FOR THE IMPROVEMENT OF BRIDGES IN NIAS ISLAND IN THE REPUBLIC OF INDONESIA	TITLE : MEZAYA BRIDGE RETAINING WALL PLAN, PROFILE & CROSS SECTIONS @ ABUT. A2	SCALE : AS SHOWN	DRAWING No: 5-9
						Rev.

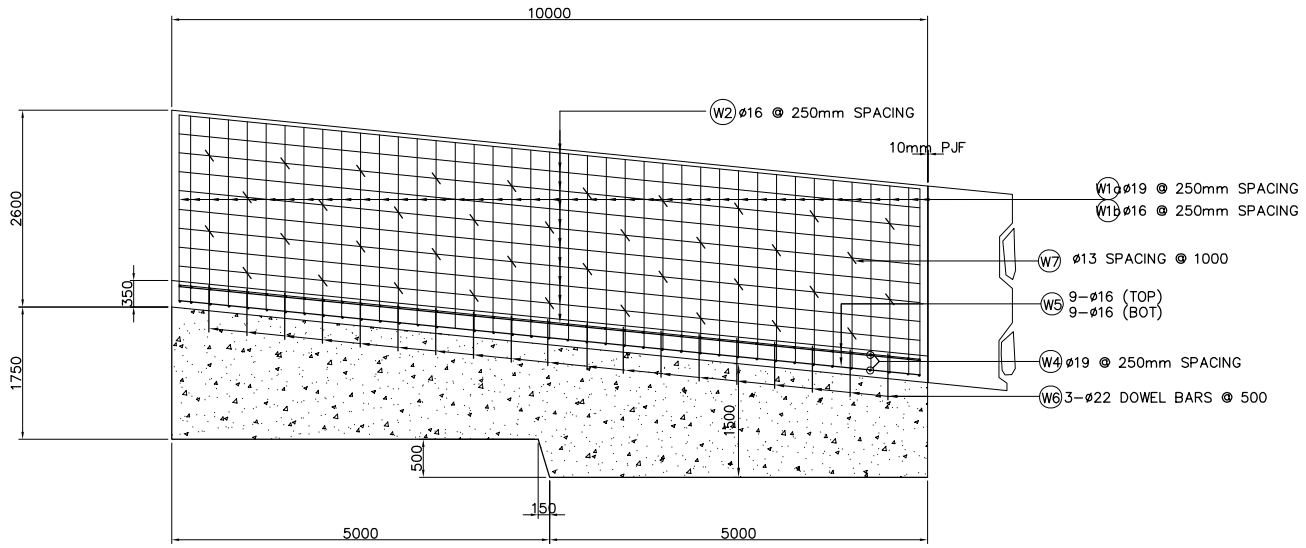

1 - ELEVATION
SCALE 1:100

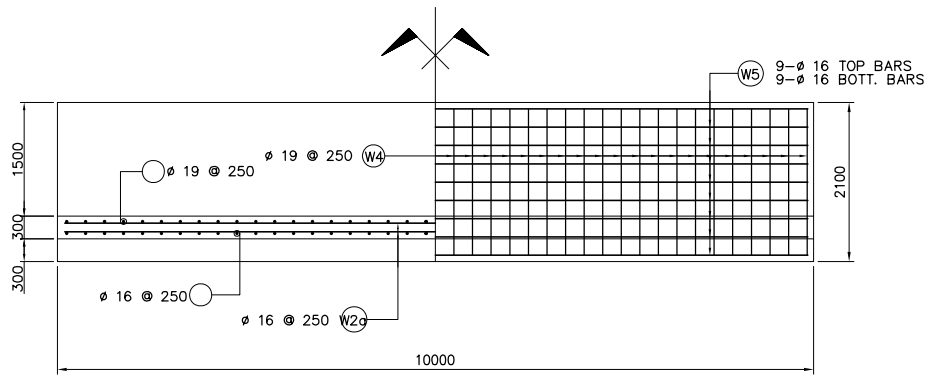

2 - PLAN
SCALE 1:100

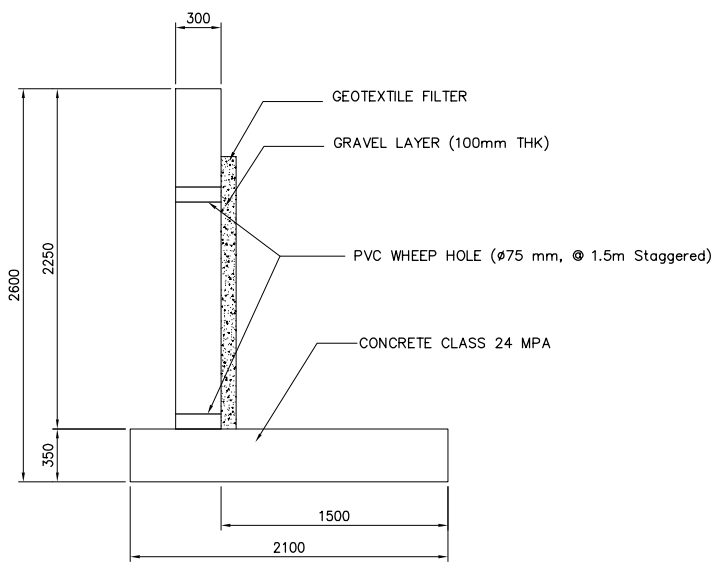

3 - RETAINING WALL
SCALE 1:50

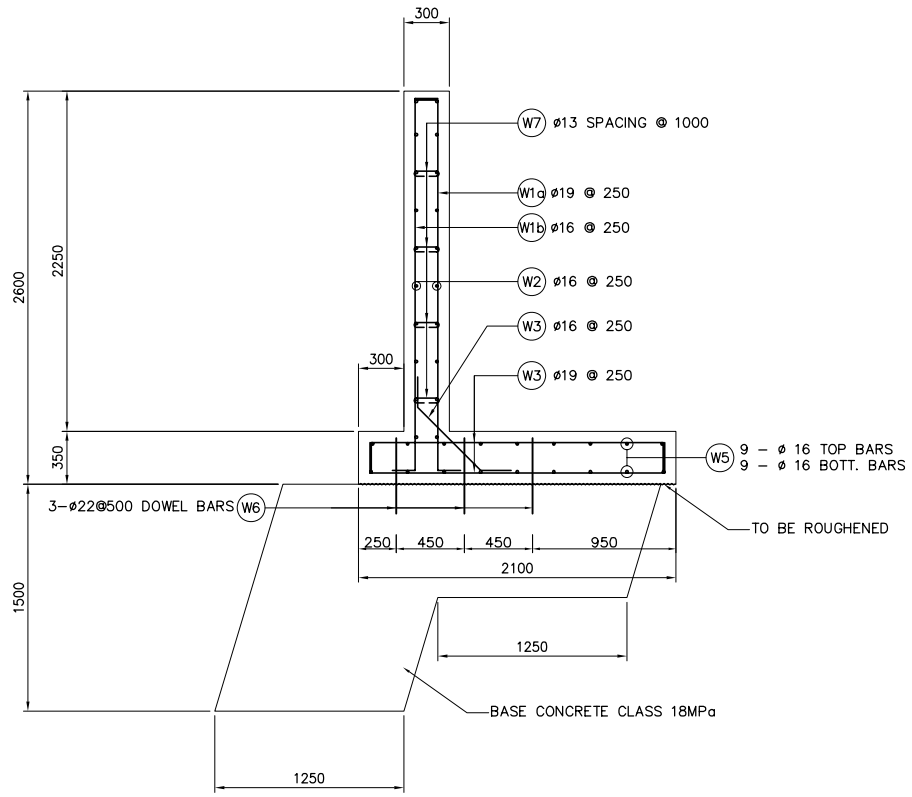

4 - SECTION
SCALE 1:50

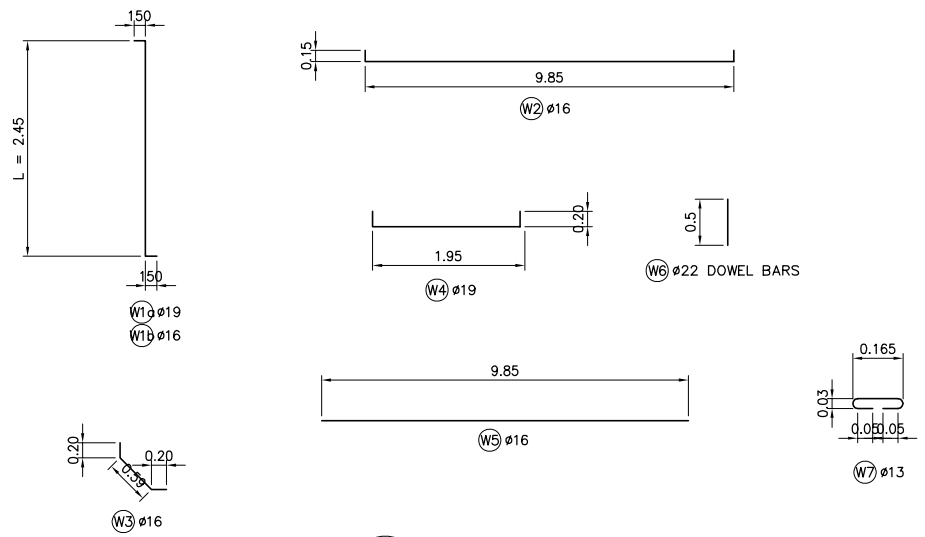

5 - BAR BENDING DIAGRAM
NOT TO SCALE

SCHEDULE OF REINFORCEMENT

STRUCTURE COMPONENT	BAR MARK	BAR SIZE	QTY	LENGTH OF BAR	UNIT WEIGHT (kg/m)	WEIGHT PER BAR	TOTAL WEIGHT (kg)	REMARKS
RETAINING WALL	W1a	ø19	41	2.750	2.226	6.12	250.92	
	W1b	ø16	41	2.750	1.578	4.34	177.94	
	W2	ø16	10	10.150	1.578	16.02	160.20	
	W3	ø16	30	1.000	1.578	1.58	47.40	
	W4	ø19	82	2.350	2.226	5.23	428.86	
	W5	ø16	18	9.850	1.578	15.54	279.72	
	W6	ø22	57	0.500	2.984	1.49	84.93	
	W7	ø13	38	0.325	1.042	0.34	12.92	
							TOTAL = 1,442.89kgs.	

DIRECTORATE GENERAL OF HIGHWAY
MINISTRY OF PUBLIC WORKS
THE REPUBLIC OF INDONESIA

JICA
JAPAN INTERNATIONAL COOPERATION AGENCY

KATAHIRA & ENGINEERS INTERNATIONAL

THE BASIC DESIGN STUDY ON THE PROJECT FOR THE IMPROVEMENT OF BRIDGES IN NIAS ISLAND IN THE REPUBLIC OF INDONESIA

TITLE : RETAINING WALL PLAN, ELEVATION, SECTION & BAR BENDING DIAGRAM

SCALE : AS SHOWN

DRAWING No: 5-10

Rev.