ELEMENTS OF CURVE											
PI NO.	STATION	COORDINATES		Δ	R	T	Lc	E	e%	W	V(kph)
		NORTHING	EASTING								
PI-00	0+000.000	142542.452	346548.700	NO HORIZONTAL CURVE							–
PI-01	0+033.246	142512.313	346562.735	29°17'43"	30.00	7.841	15.339	1.008	–	–	–
PI-02	0+097.816	142474.400	346615.426	10°15'34"	100.00	8.977	17.906	0.402	–	–	–
PI-03	0+165.624	142445.213	346676.683	NO HORIZONTAL CURVE							–

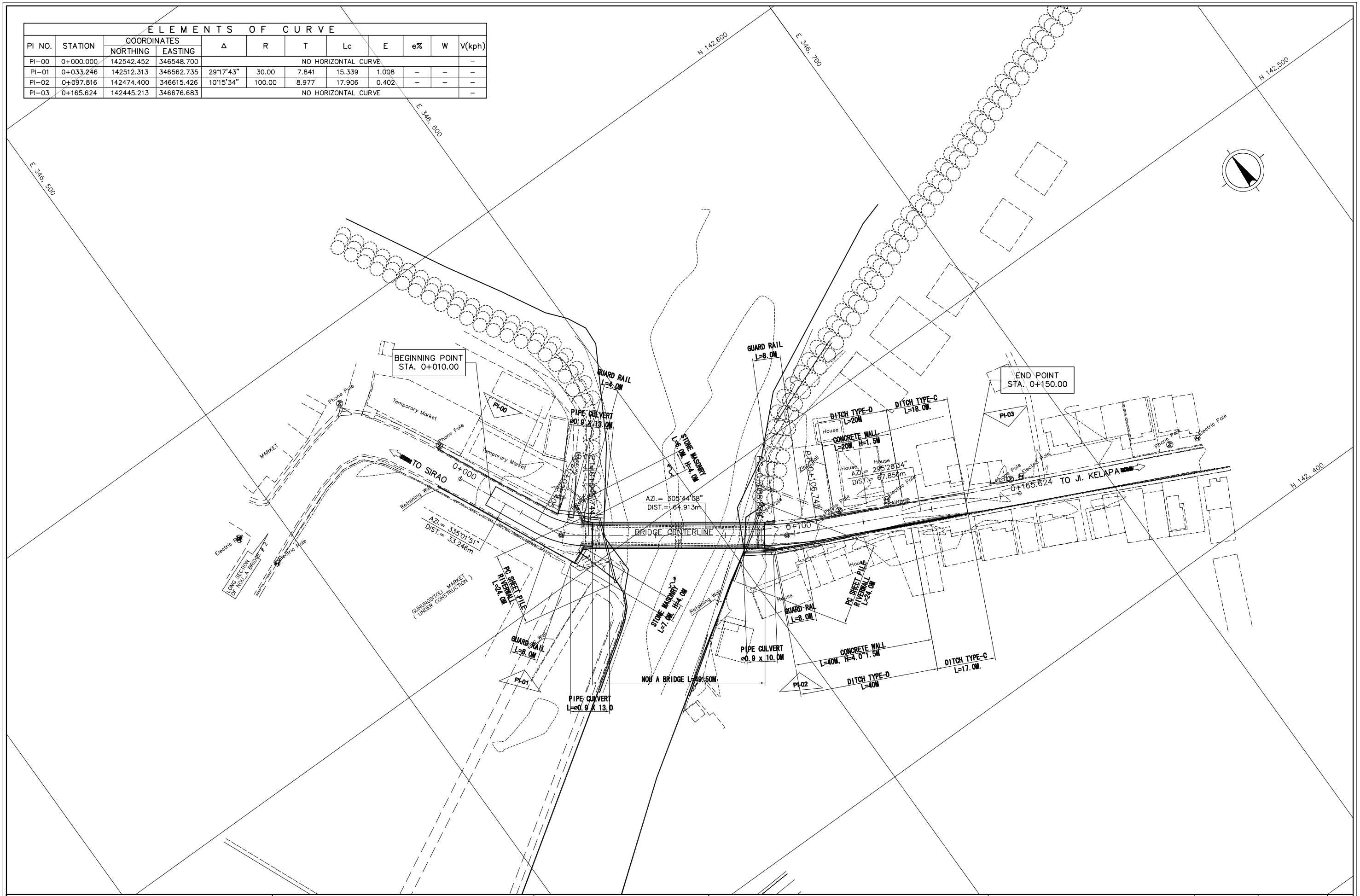

DIRECTORATE GENERAL OF HIGHWAY MINISTRY OF PUBLIC WORKS THE REPUBLIC OF INDONESIA	JICA JAPAN INTERNATIONAL COOPERATION AGENCY	KEI KATAHIRA & ENGINEERS INTERNATIONAL	THE BASIC DESIGN STUDY ON THE PROJECT FOR THE IMPROVEMENT OF BRIDGES IN NIAS ISLAND IN THE REPUBLIC OF INDONESIA	TITLE : NOU A BRIDGE (GENERAL SITE PLAN)	SCALE : 1:1000	DRAWING No: 2-1 Rev.

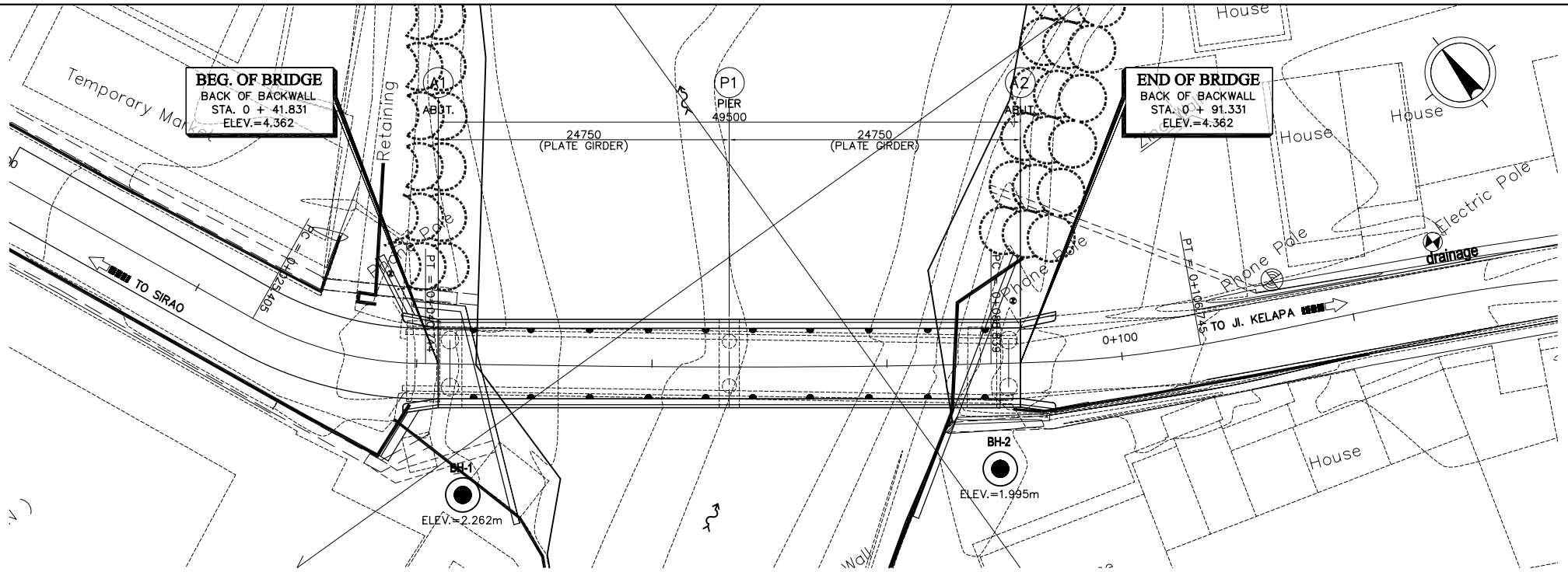

1 GENERAL PLAN
SCALE 1:500

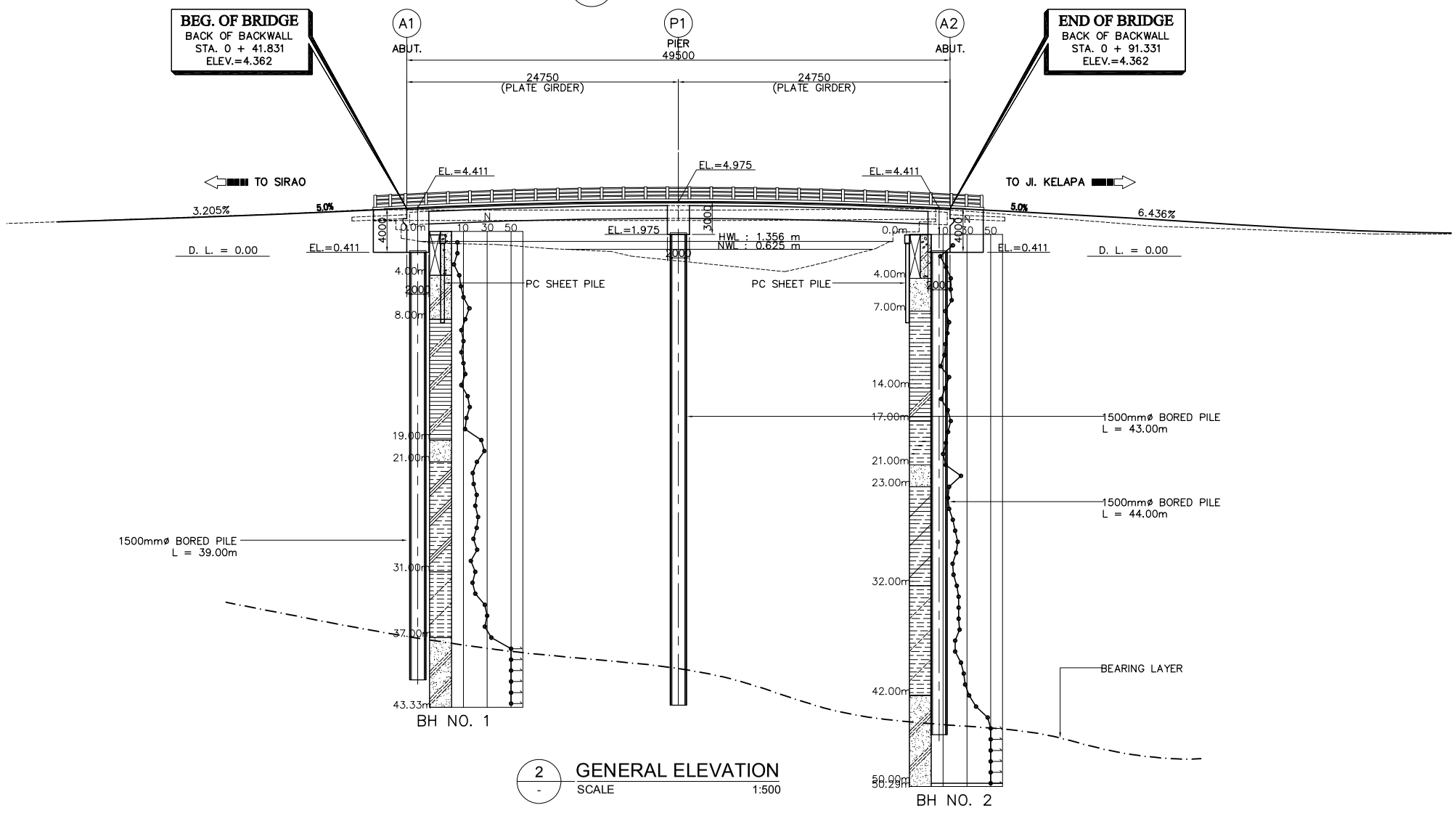

2 GENERAL ELEVATION
SCALE 1:500

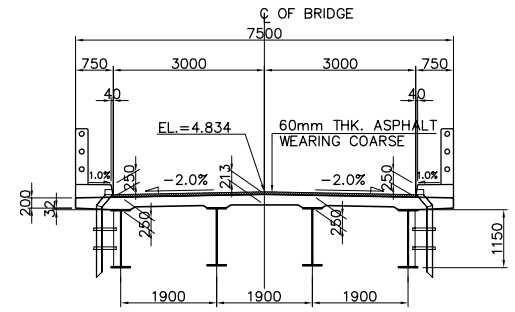

3 SECTION @ MID SPAN
SCALE 1:150

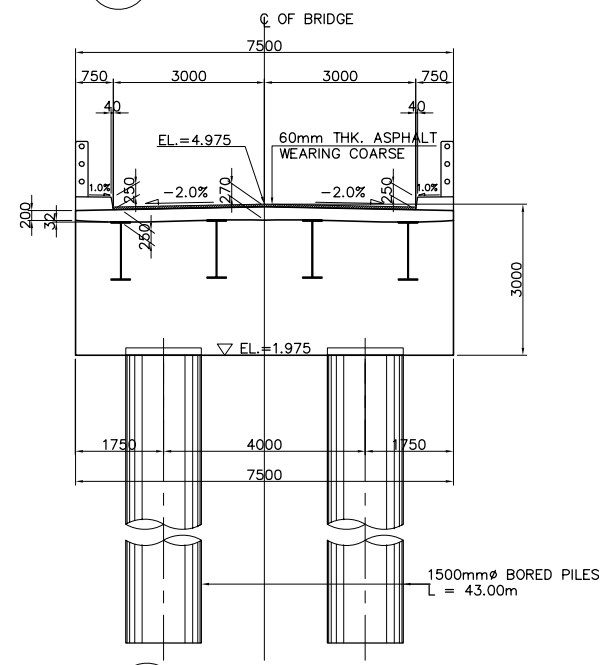

4 SECTION @ PIER
SCALE 1:150

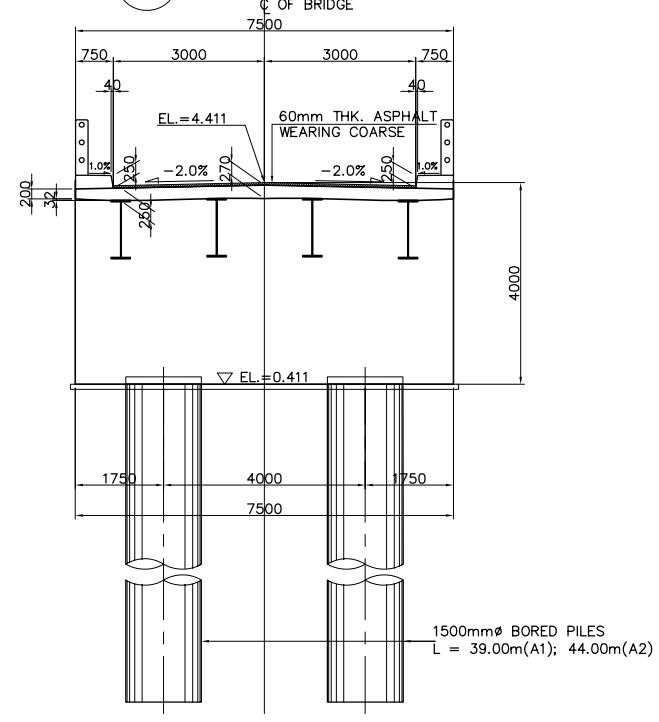

5 SECTION @ ABUTMENT
SCALE 1:150

DIRECTORATE GENERAL OF HIGHWAY MINISTRY OF PUBLIC WORKS THE REPUBLIC OF INDONESIA	JICA JAPAN INTERNATIONAL COOPERATION AGENCY	KATAHIRA & ENGINEERS INTERNATIONAL	THE BASIC DESIGN STUDY ON THE PROJECT FOR THE IMPROVEMENT OF BRIDGES IN NIAS ISLAND IN THE REPUBLIC OF INDONESIA	TITLE : NOU A BRIDGE GENERAL VIEW	SCALE : AS SHOWN	DRAWING No: 2-2

Rev.

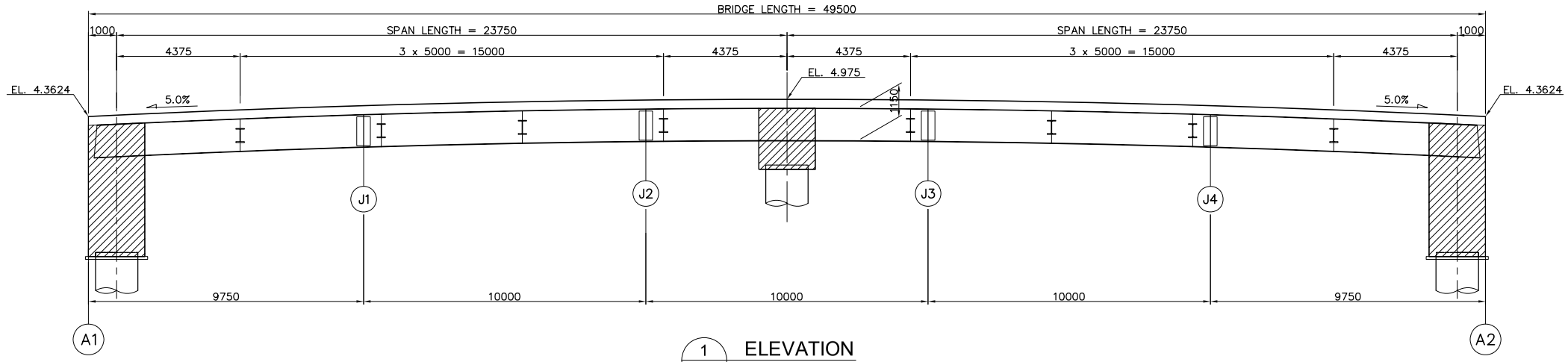

1 - ELEVATION
SCALE 1:100

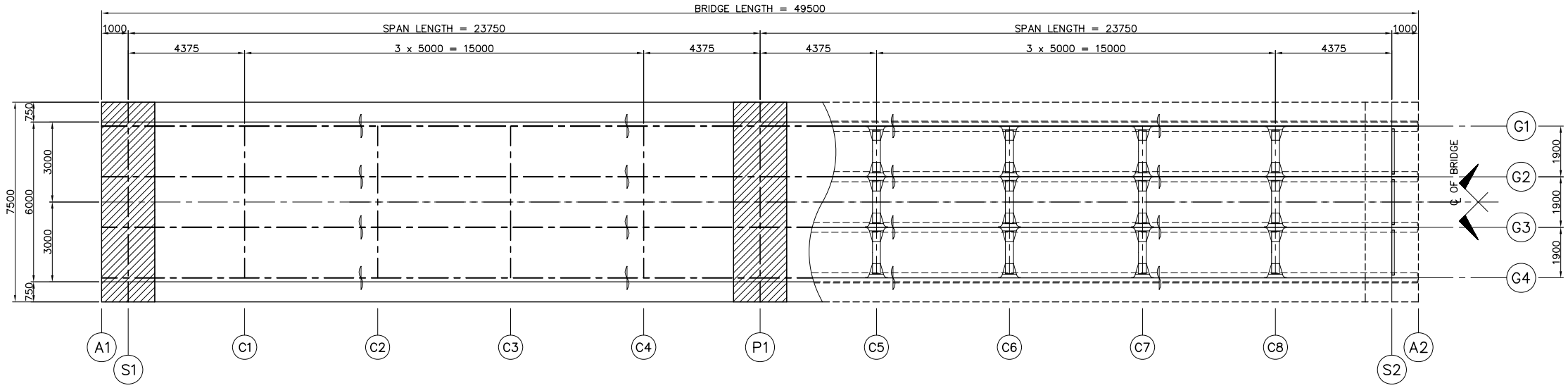

2 - PLAN
SCALE 1:100

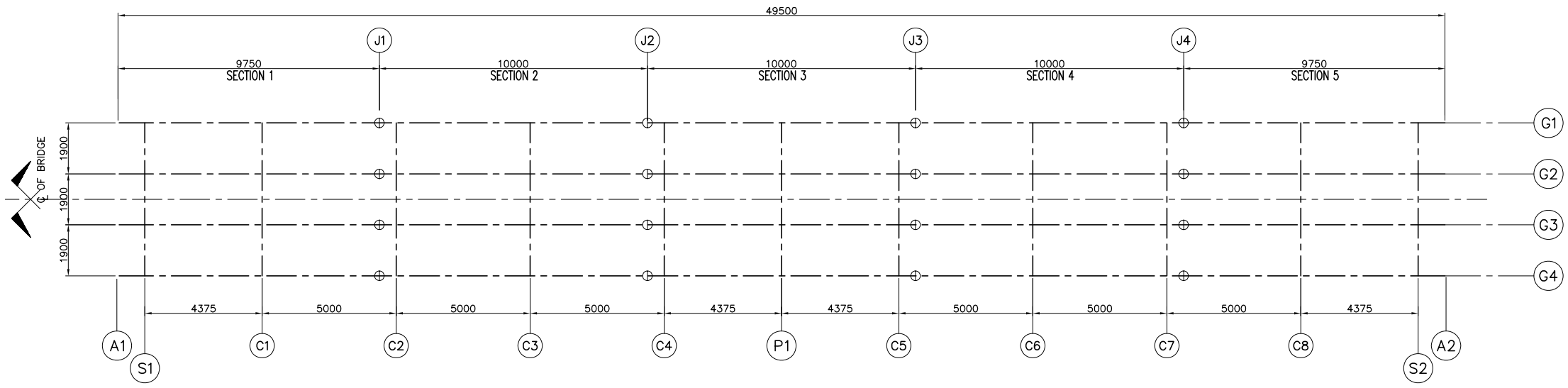

3 - KEY PLAN
SCALE 1:100

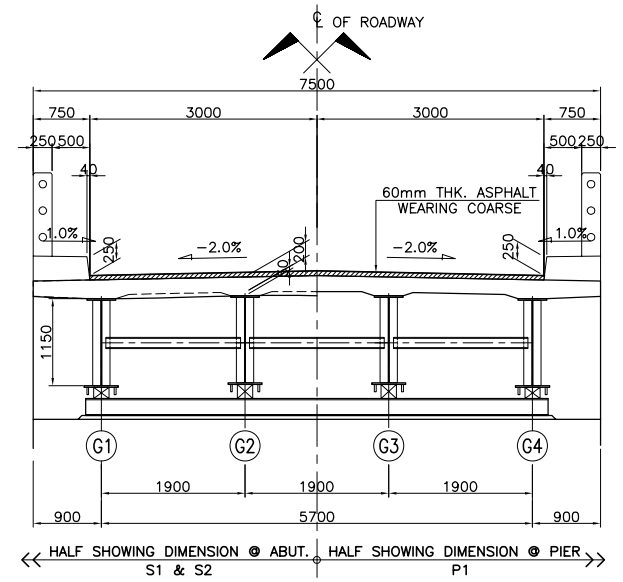

4 - SECTION @ P1, S1 & S2
SCALE 1:50

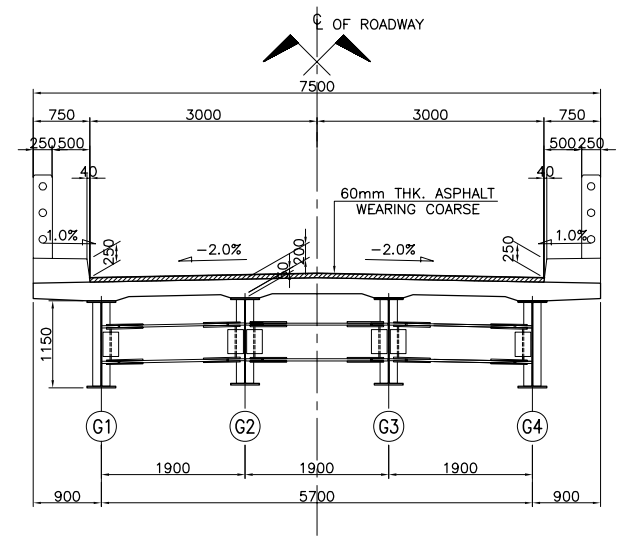

5 - SECTION @ C1~C8
SCALE 1:50

DIRECTORATE GENERAL OF HIGHWAY MINISTRY OF PUBLIC WORKS THE REPUBLIC OF INDONESIA	JICA JAPAN INTERNATIONAL COOPERATION AGENCY	KATAHIRA & ENGINEERS INTERNATIONAL	THE BASIC DESIGN STUDY ON THE PROJECT FOR THE IMPROVEMENT OF BRIDGES IN NIAS ISLAND IN THE REPUBLIC OF INDONESIA	TITLE : NOU A BRIDGE GENERAL DIMENSION OF SUPERSTRUCTURE	SCALE : AS SHOWN	DRAWING No: 2-3

Rev.

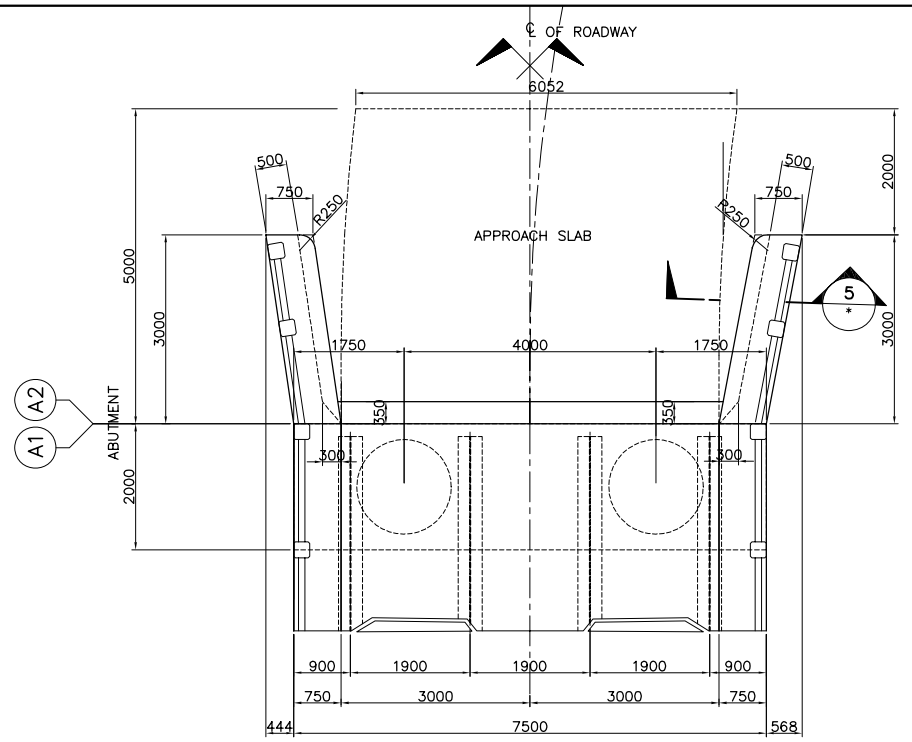

2 P L A N
SCALE 1:60

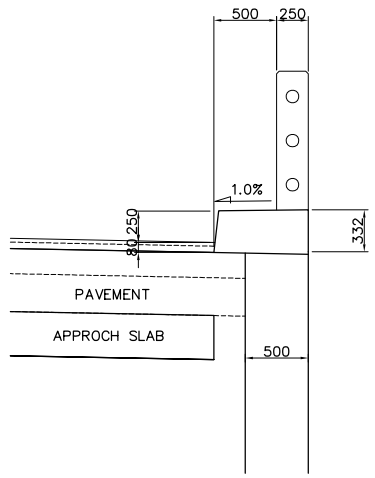

5 SECTION
SCALE 1:30

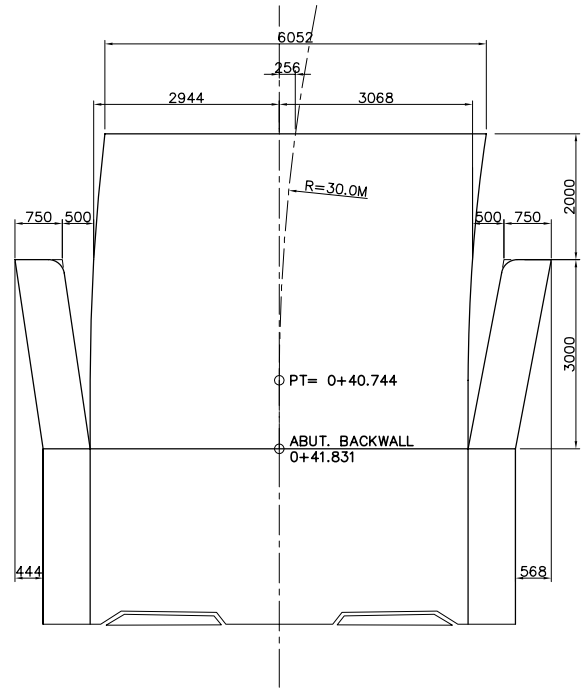

ABUT. A1

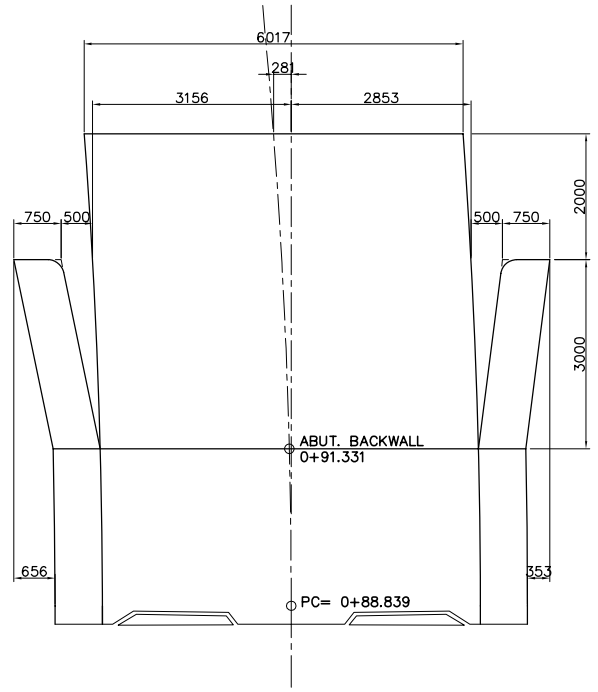

ABUT. A2

DIMENSIONS OF CURVATURE

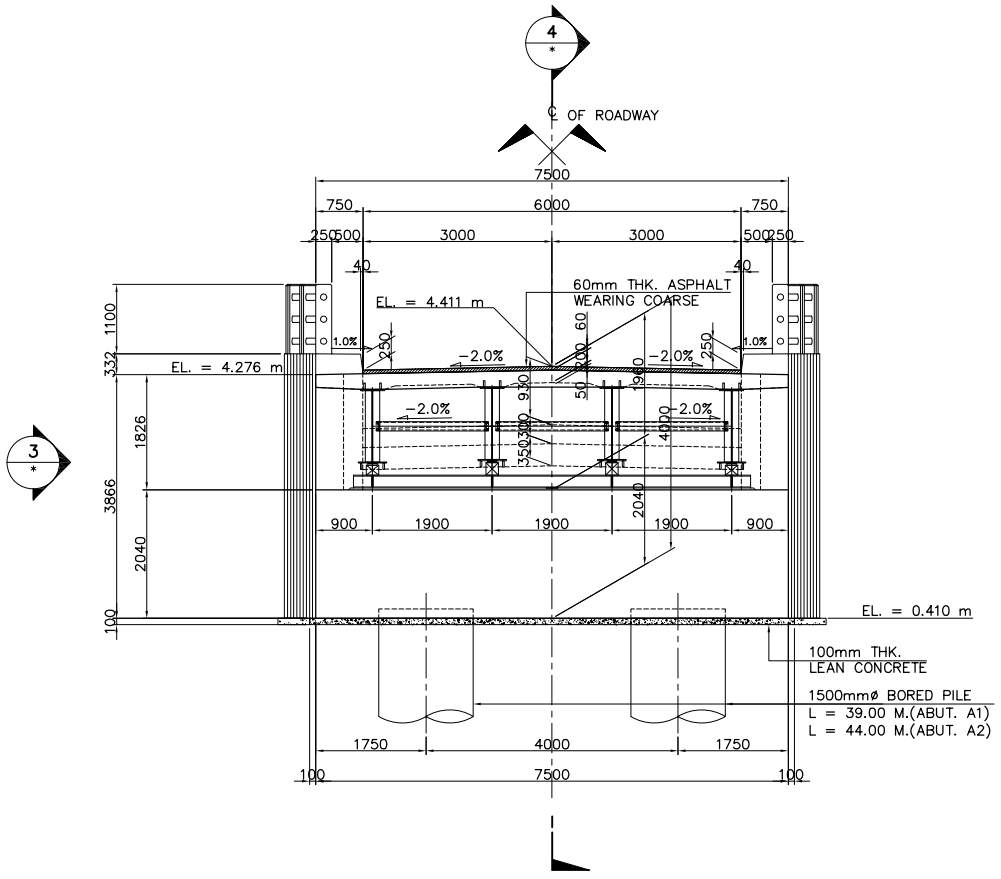

1 SECTION
SCALE 1:60

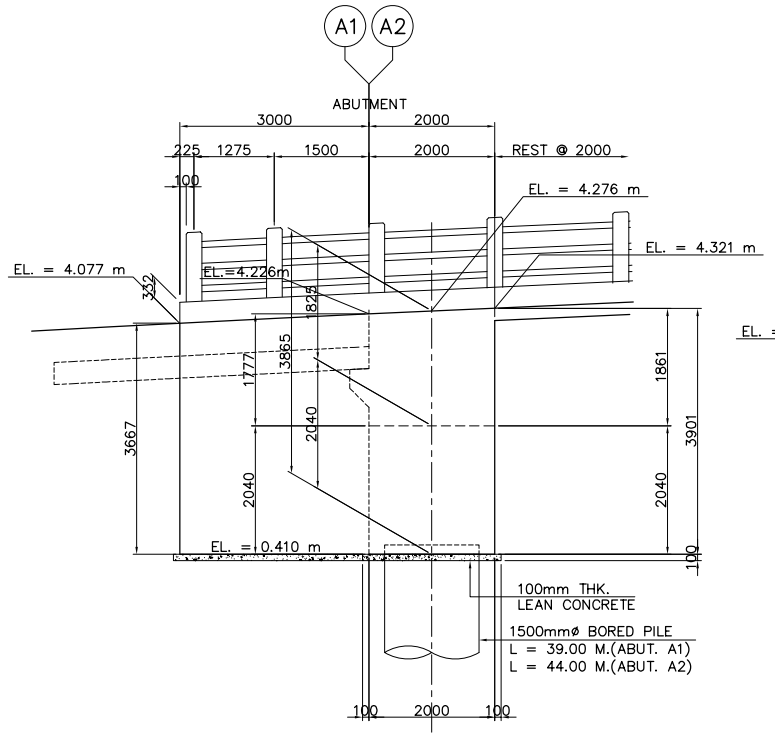

3 ELEVATION
SCALE 1:60

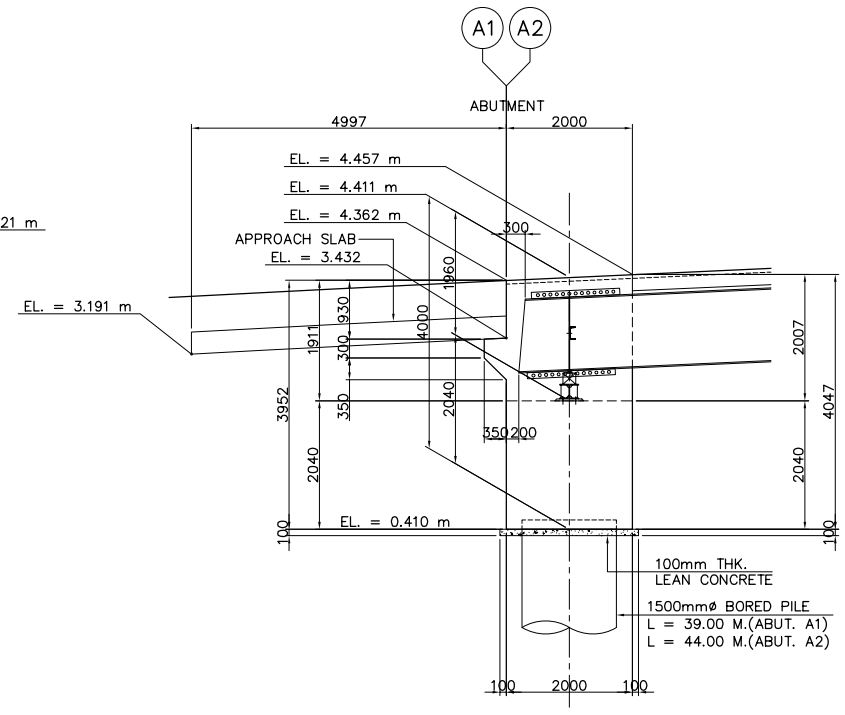

4 SECTION
SCALE 1:60

DIRECTORATE GENERAL OF HIGHWAY MINISTRY OF PUBLIC WORKS THE REPUBLIC OF INDONESIA	JICA JAPAN INTERNATIONAL COOPERATION AGENCY	KATAHIRA & ENGINEERS INTERNATIONAL	THE BASIC DESIGN STUDY ON THE PROJECT FOR THE IMPROVEMENT OF BRIDGES IN NIAS ISLAND IN THE REPUBLIC OF INDONESIA	TITLE : NOU A BRIDGE SUBSTRUCTURE STRUCTURAL DIMENSION (ABUT. A1 & A2)	SCALE : AS SHOWN	DRAWING No: 2-4

Rev.

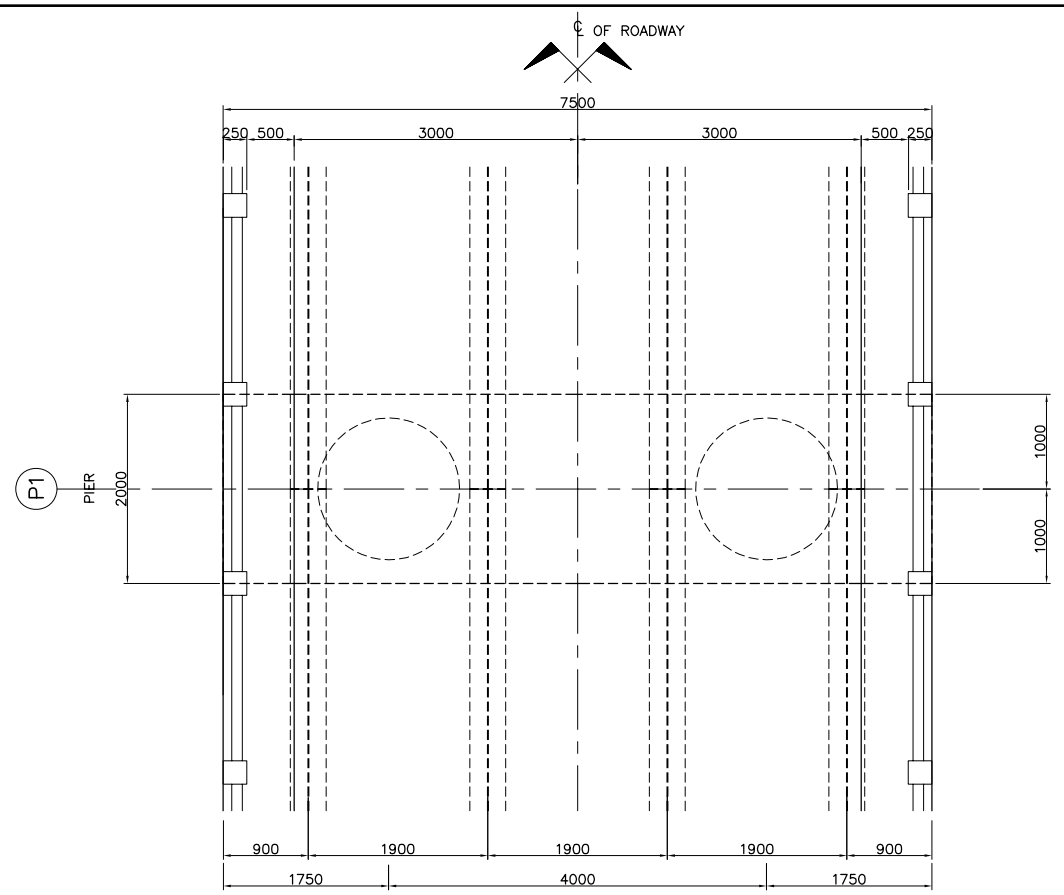

1 - PLAN
SCALE 1:40

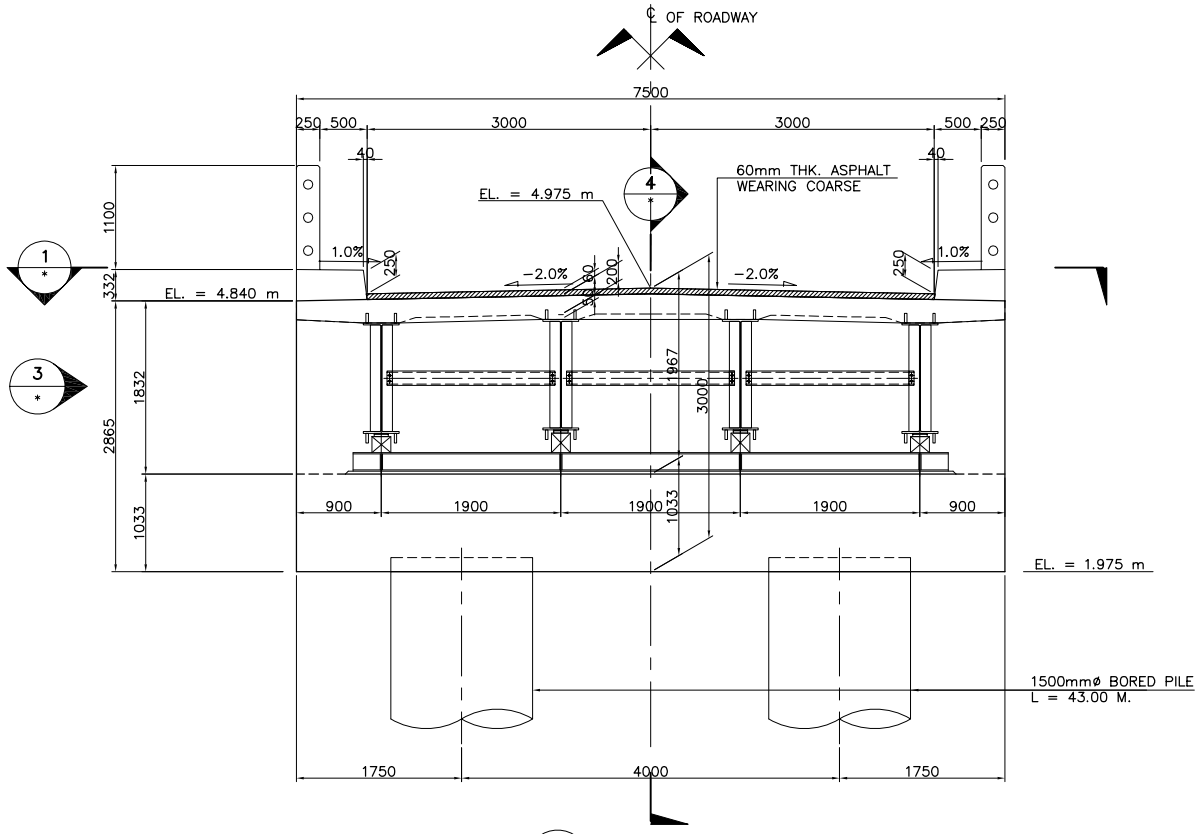

2 - SECTION
SCALE 1:40

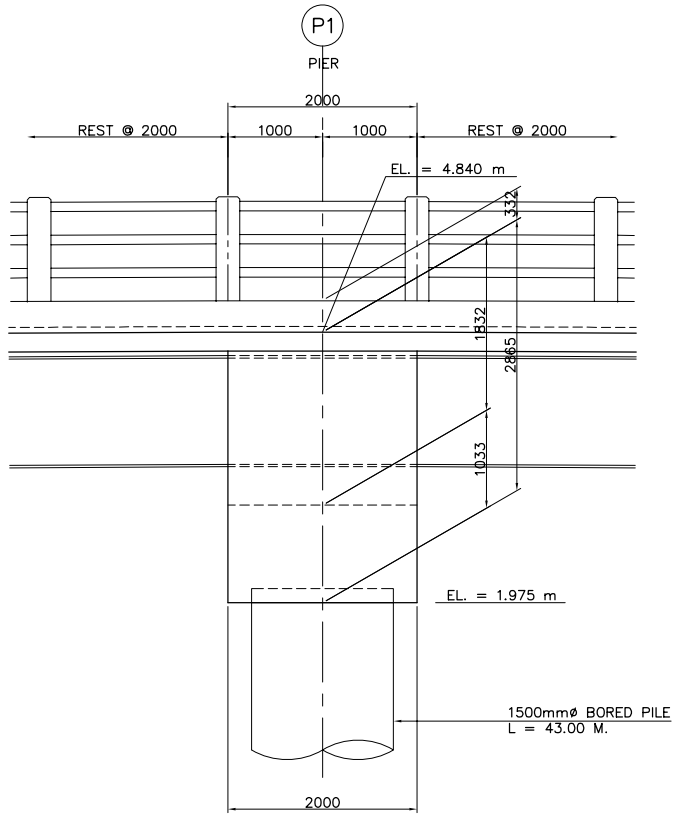

3 - ELEVATION
SCALE 1:40

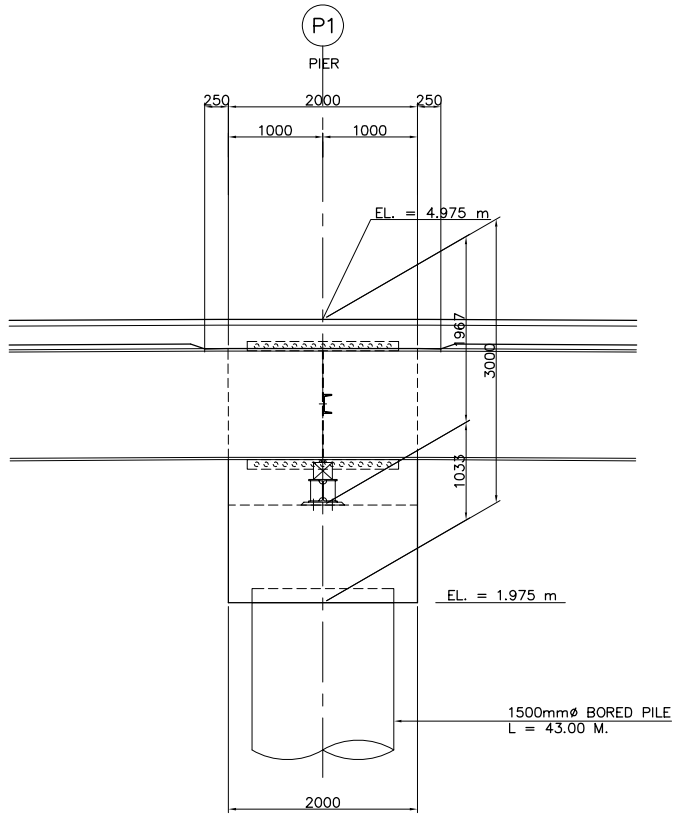

4 - SECTION
SCALE 1:40

DIRECTORATE GENERAL OF HIGHWAY MINISTRY OF PUBLIC WORKS THE REPUBLIC OF INDONESIA	JICA JAPAN INTERNATIONAL COOPERATION AGENCY	KATAHIRA & ENGINEERS INTERNATIONAL	THE BASIC DESIGN STUDY ON THE PROJECT FOR THE IMPROVEMENT OF BRIDGES IN NIAS ISLAND IN THE REPUBLIC OF INDONESIA	TITLE : NOU A BRIDGE SUBSTRUCTURE STRUCTURAL DIMENSION (PIER P1)	SCALE : AS SHOWN	DRAWING No: 2-5 Rev.

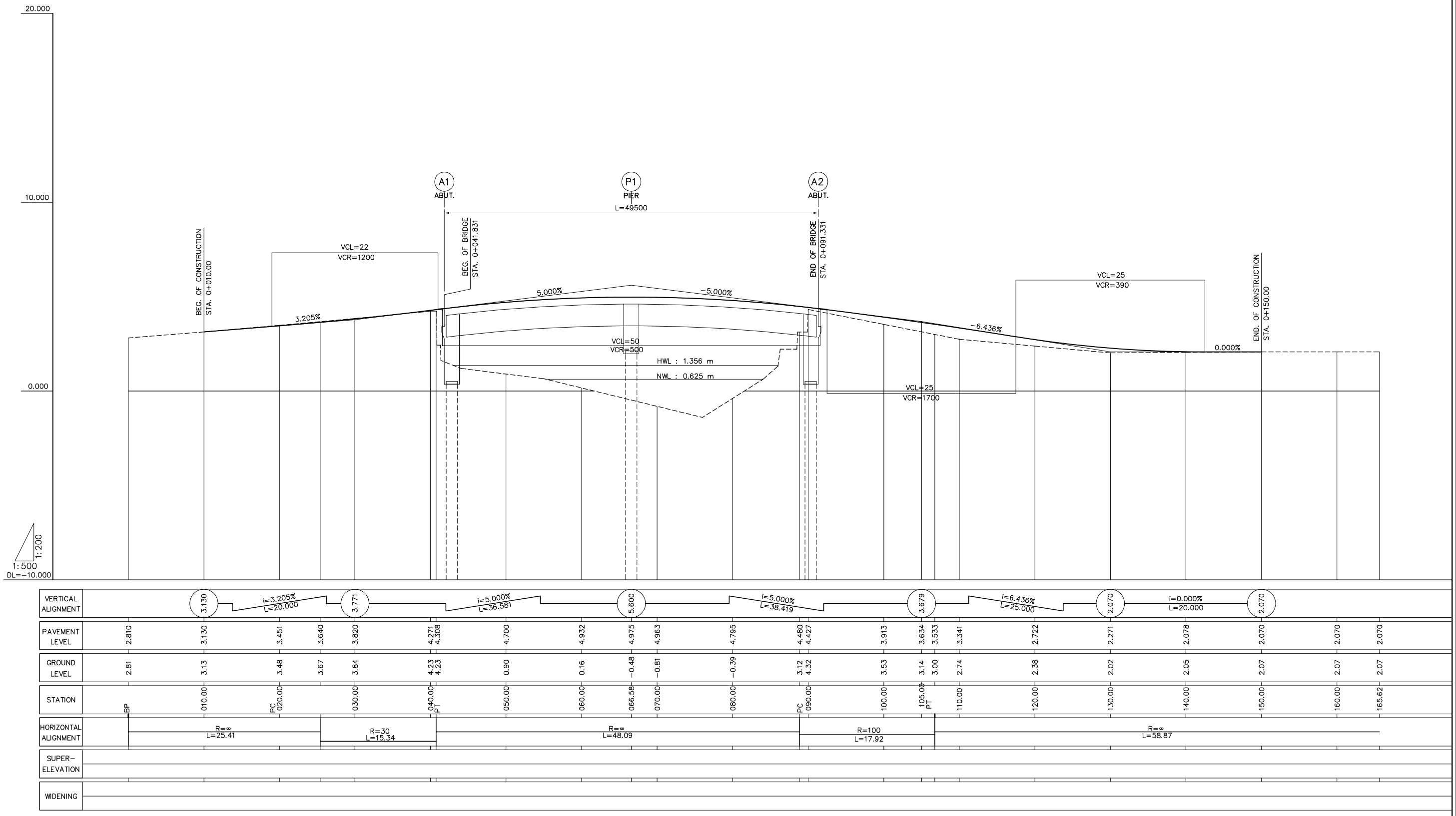

DIRECTORATE GENERAL OF HIGHWAY MINISTRY OF PUBLIC WORKS THE REPUBLIC OF INDONESIA	JICA JAPAN INTERNATIONAL COOPERATION AGENCY	KATAHIRA & ENGINEERS INTERNATIONAL	THE BASIC DESIGN STUDY ON THE PROJECT FOR THE IMPROVEMENT OF BRIDGES IN NIAS ISLAND IN THE REPUBLIC OF INDONESIA	TITLE : NOU A BRIDGE APPROACH ROAD PROFILE	SCALE : H = 1:500 V = 1:200	DRAWING No: 2-6 Rev.

NO.0K090.0000
GH=4.32
PH=4.427

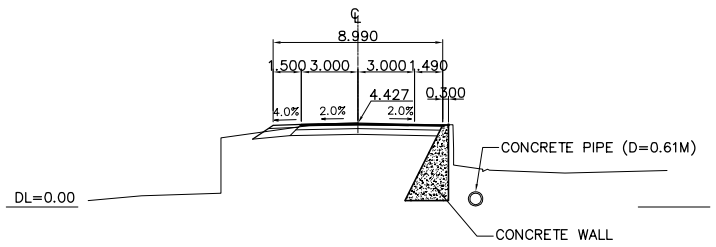

NO.0K030.0000
GH=3.84
PH=3.820

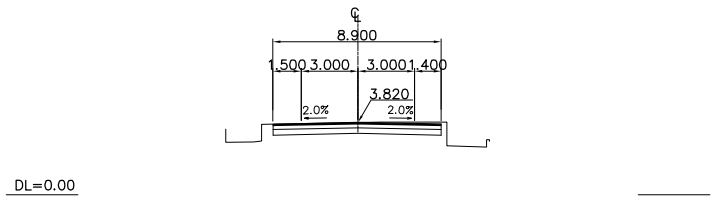

NO.0K020.0000
GH=3.48
PH=3.451

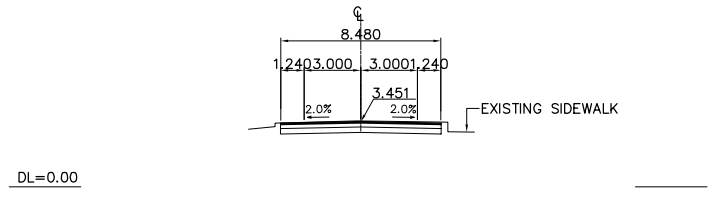

B.P. (0K010.00)
GH=3.13
PH=3.130

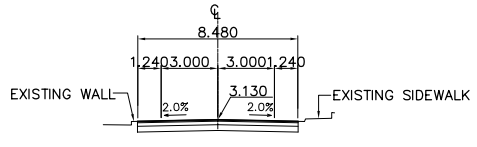

NO.0K130.0000
GH=2.02
PH=2.271

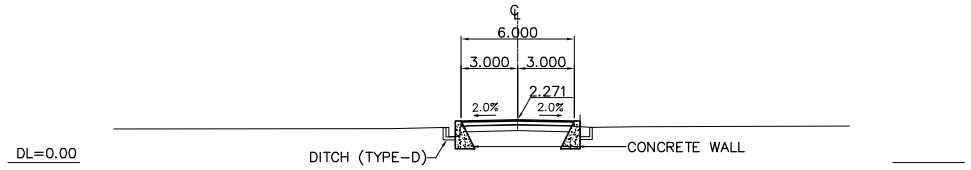

NO.0K120.0000
GH=2.38
PH=2.722

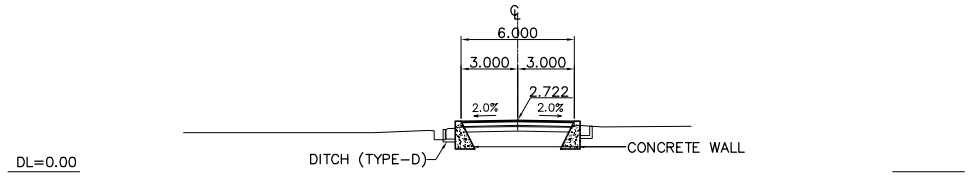

NO.0K110.0000
GH=2.74
PH=3.341

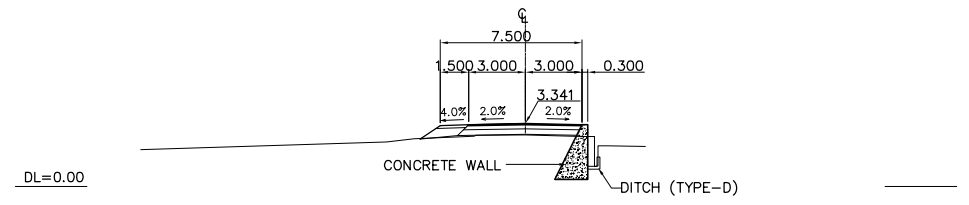

NO.0K100.0000
GH=3.53
PH=3.913

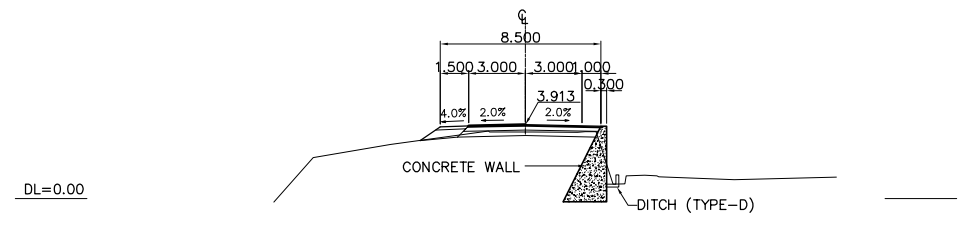

NO.0K150.0000
GH=2.07
PH=2.070

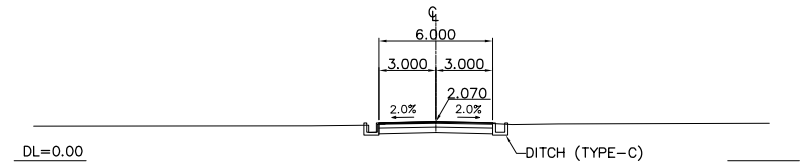

NO.0K140.0000
GH=2.05
PH=2.078

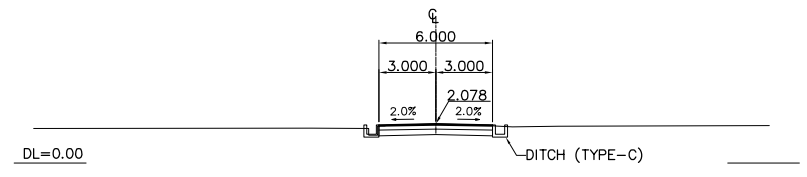

DIRECTORATE GENERAL OF HIGHWAY MINISTRY OF PUBLIC WORKS THE REPUBLIC OF INDONESIA	JICA JAPAN INTERNATIONAL COOPERATION AGENCY	KATAHIRA & ENGINEERS INTERNATIONAL	THE BASIC DESIGN STUDY ON THE PROJECT FOR THE IMPROVEMENT OF BRIDGES IN NIAS ISLAND IN THE REPUBLIC OF INDONESIA	TITLE : NOU A BRIDGE APPROACH ROAD CROSS SECTIONS	SCALE : 1 : 400	DRAWING No: 2-7

Rev.

ELEMENTS OF CURVE											
PI NO.	STATION	COORDINATES		Δ	R	T	Lc	E	e%	W	V(kph)
		NORTHING	EASTING								
PI-00	0+000.000	126712.771	354863.069	NO HORIZONTAL CURVE							–
PI-01	0+117.390	126771.103	354964.939	32°13'08"	110.00	31.769	61.856	4.496	6.00%	–	–
PI-02	0+256.140	126765.166	355105.247	17°34'59"	150.00	23.198	46.032	1.783	6.00%	–	–
PI-03	0+305.000	126778.040	355152.759	NO HORIZONTAL CURVE							–

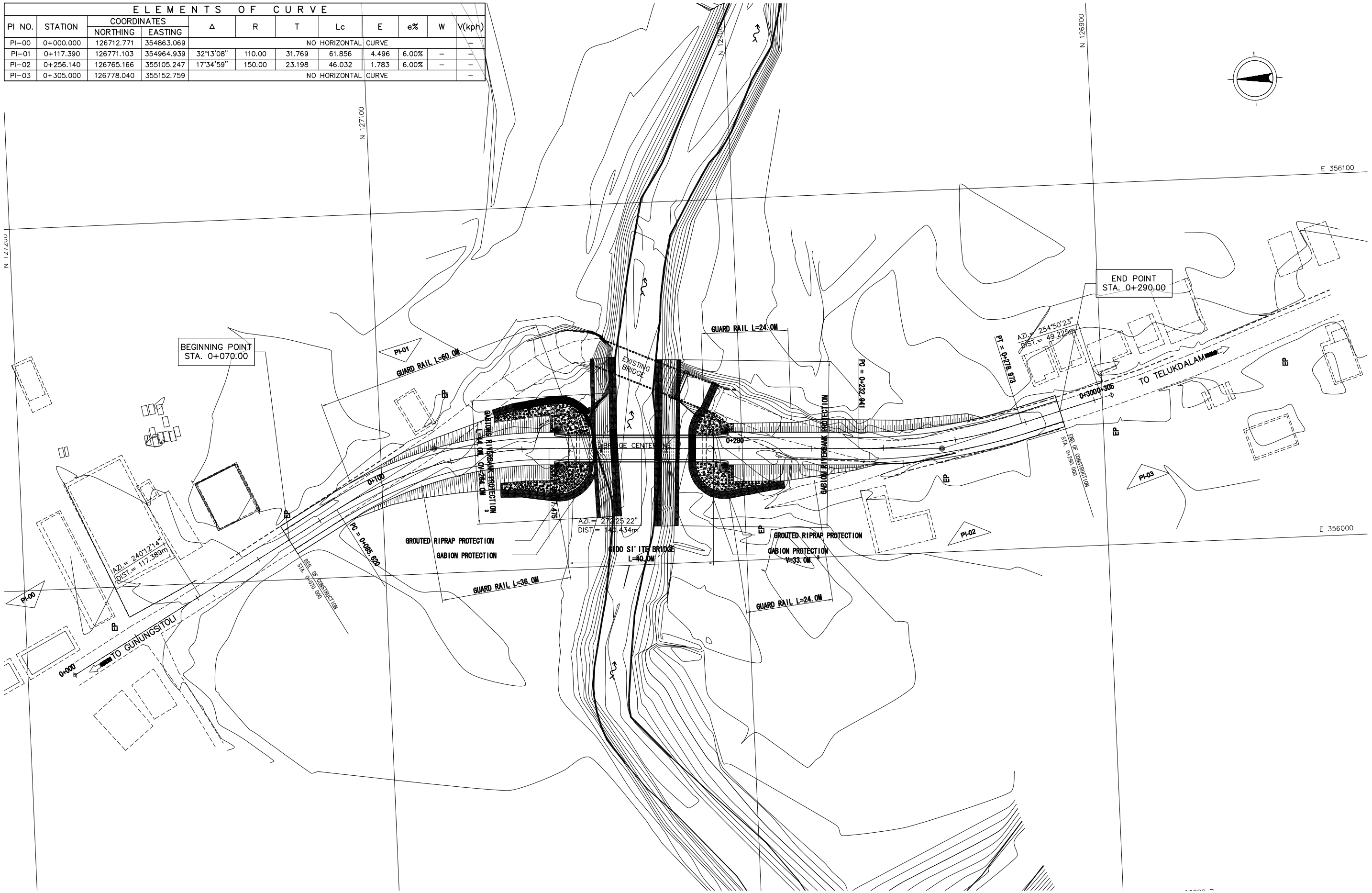

DIRECTORATE GENERAL OF HIGHWAY MINISTRY OF PUBLIC WORKS THE REPUBLIC OF INDONESIA	JICA JAPAN INTERNATIONAL COOPERATION AGENCY	KATAHIRA & ENGINEERS INTERNATIONAL	THE BASIC DESIGN STUDY ON THE PROJECT FOR THE IMPROVEMENT OF BRIDGES IN NIAS ISLAND IN THE REPUBLIC OF INDONESIA	TITLE : GIDO SI'ITE BRIDGE (GENERAL SITE PLAN)	SCALE : 1:1000	DRAWING No: 3-1	Rev.

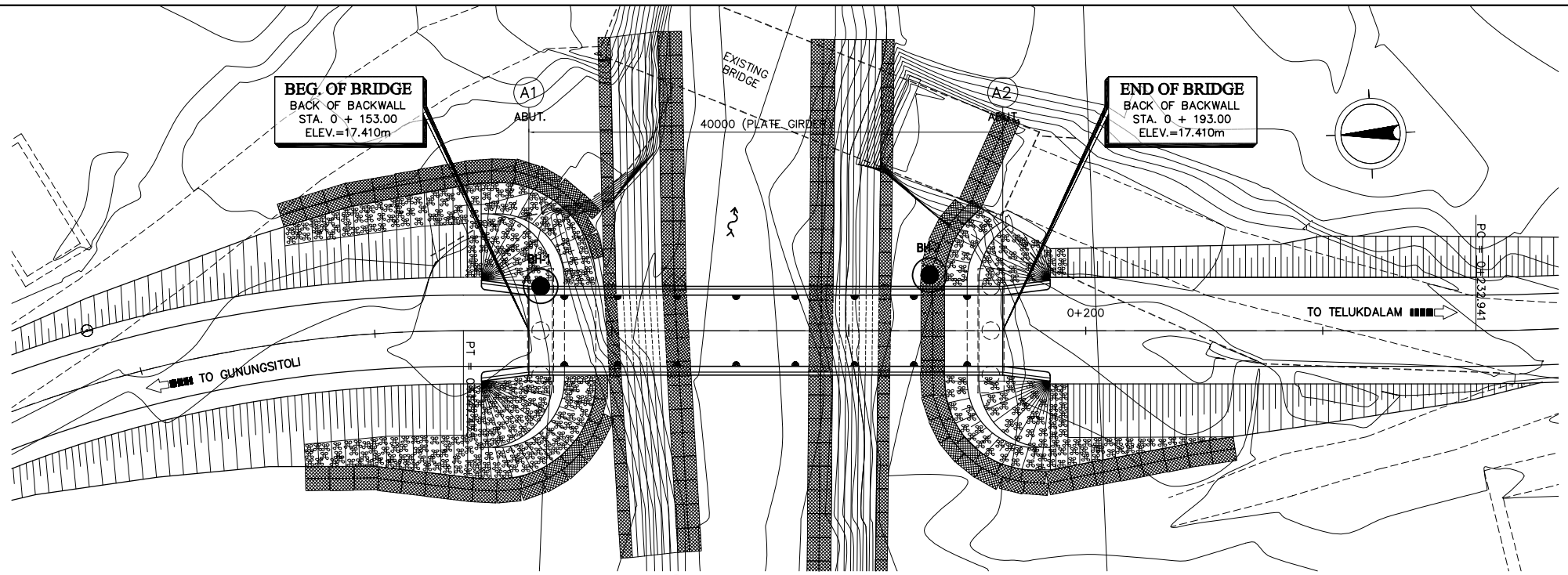

1 - GENERAL PLAN
SCALE 1:500

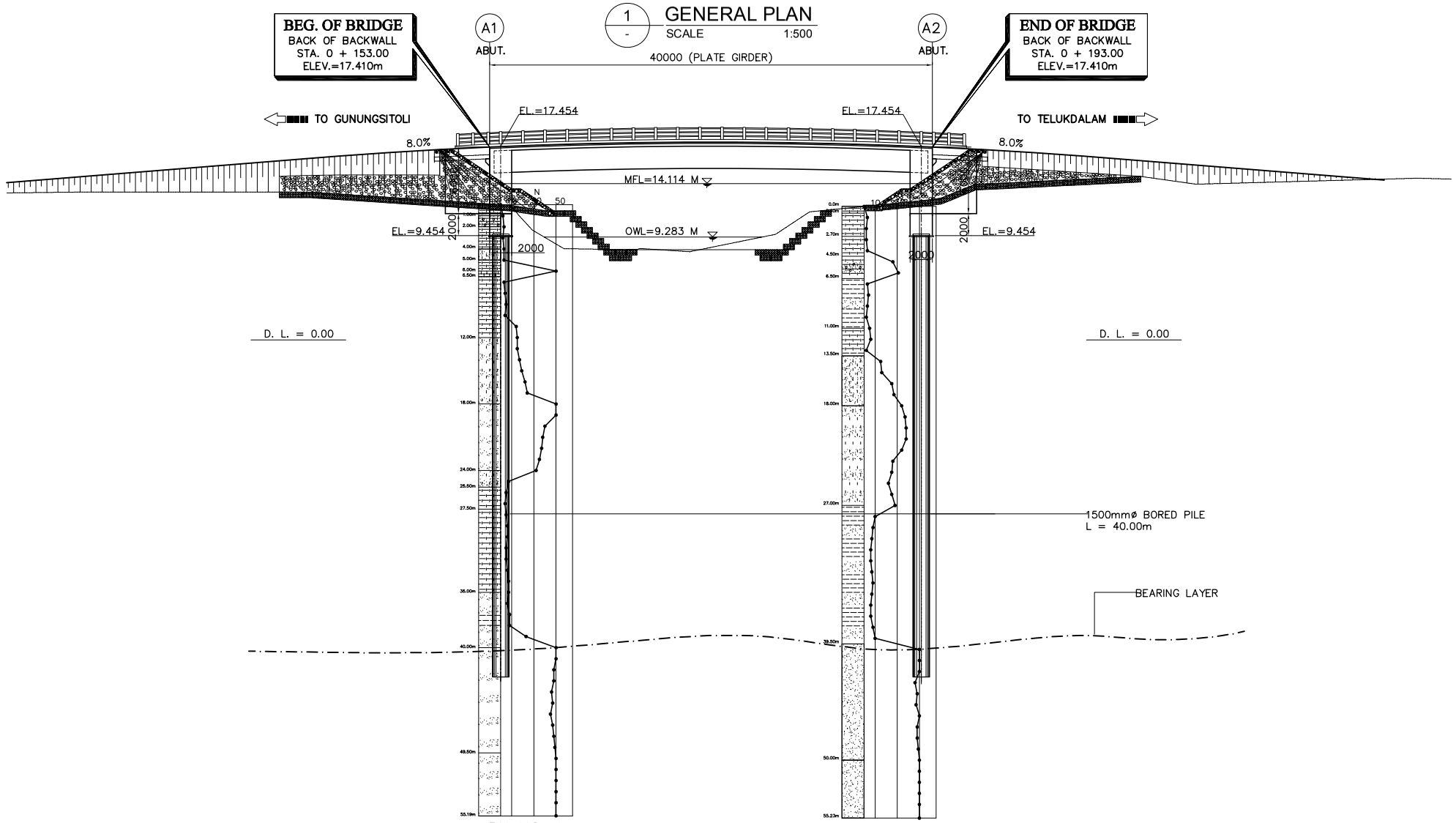

2 - GENERAL ELEVATION
SCALE 1:500

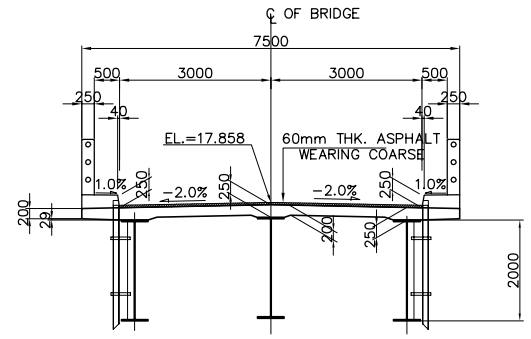

3 - SECTION @ MID SPAN
SCALE 1:150

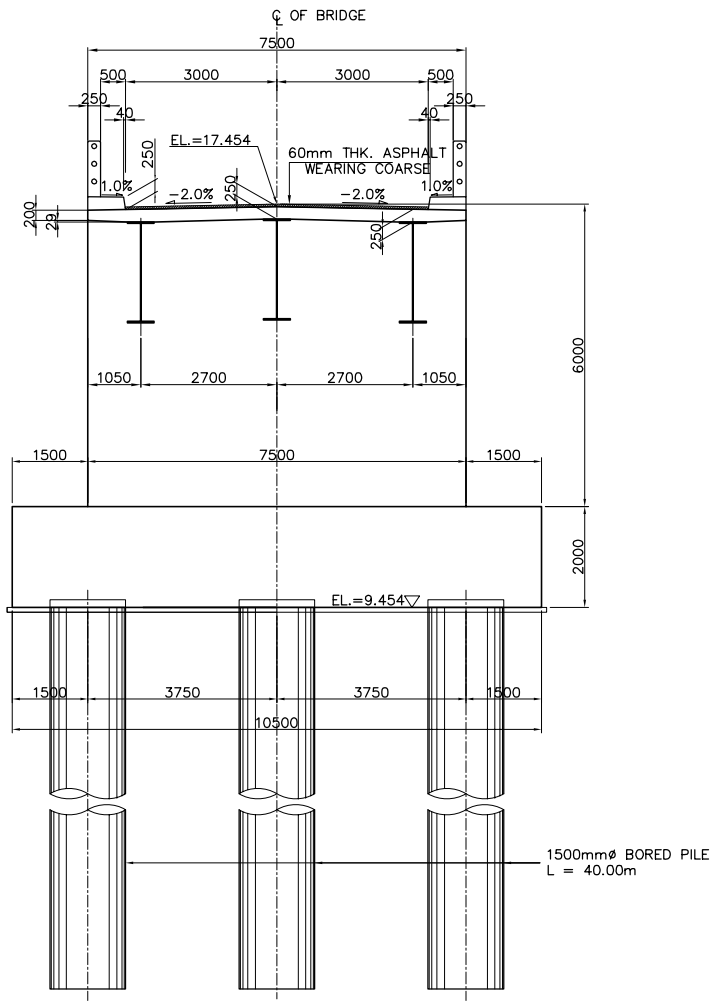

4 - SECTION @ ABUTMENT
SCALE 1:150

DIRECTORATE GENERAL OF HIGHWAY MINISTRY OF PUBLIC WORKS THE REPUBLIC OF INDONESIA	JICA JAPAN INTERNATIONAL COOPERATION AGENCY	KATAHIRA & ENGINEERS INTERNATIONAL	THE BASIC DESIGN STUDY ON THE PROJECT FOR THE IMPROVEMENT OF BRIDGES IN NIAS ISLAND IN THE REPUBLIC OF INDONESIA	TITLE : GIDO SI'ITE BRIDGE GENERAL VIEW	SCALE : AS SHOWN	DRAWING No: 3-2

Rev.

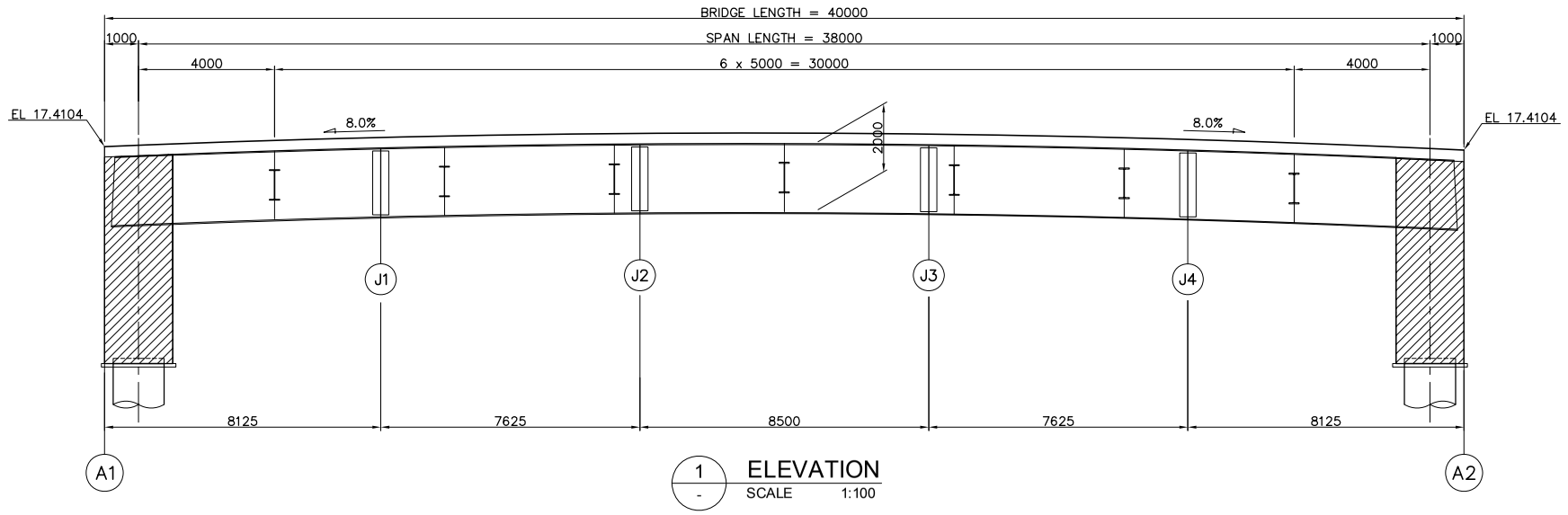

1 - ELEVATION
SCALE 1:100

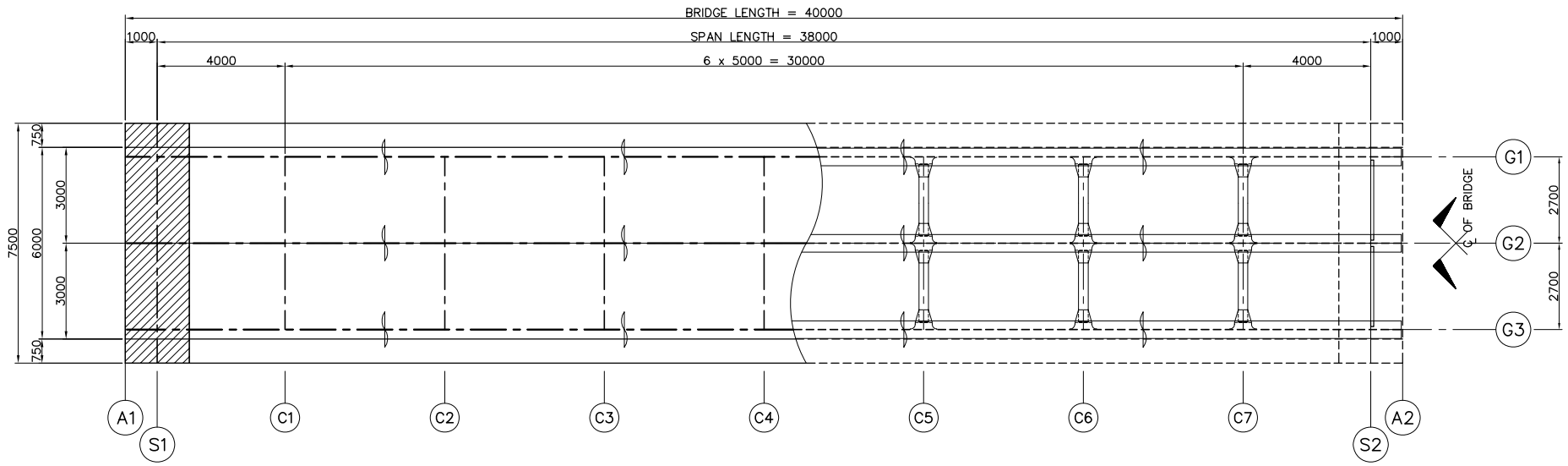

2 - PLAN
SCALE 1:100

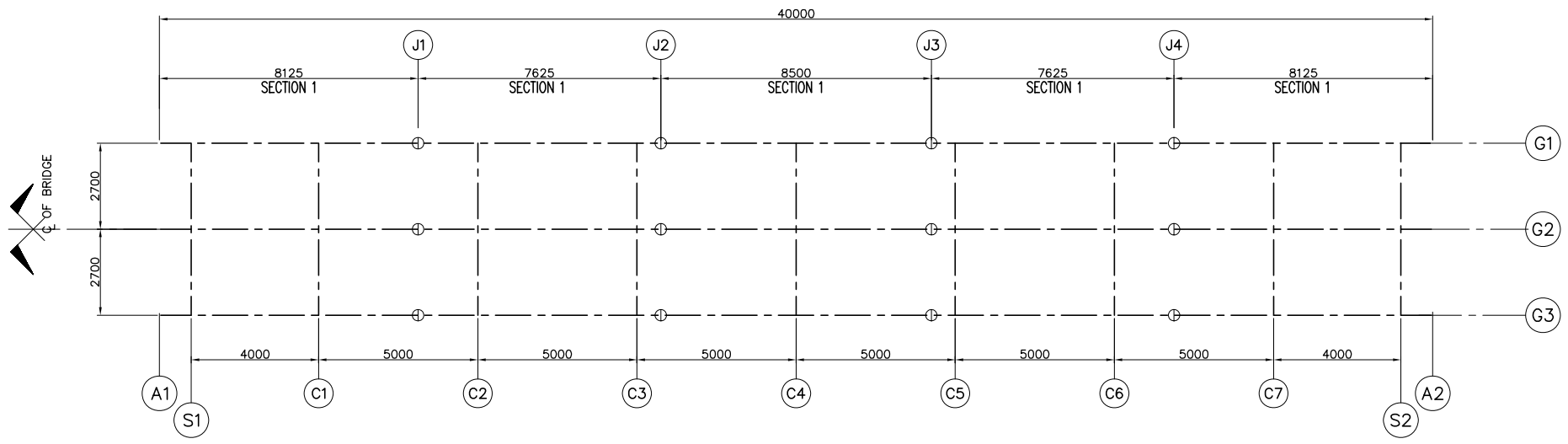

3 - KEY PLAN
SCALE 1:100

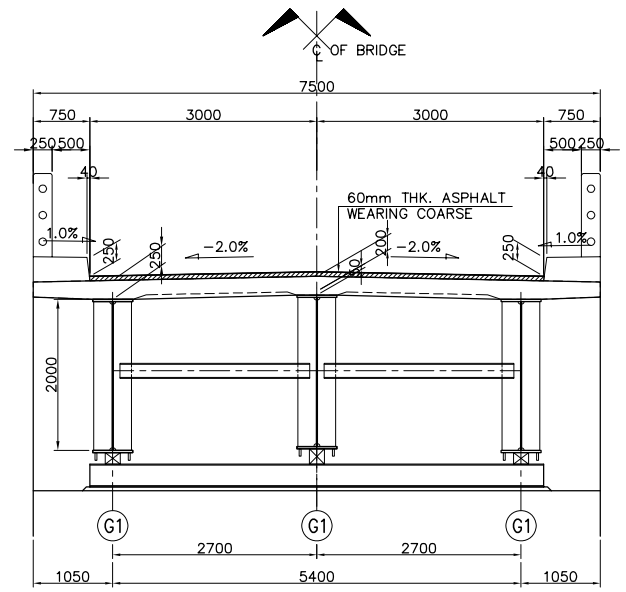

4 - SECTION @ S1 & S2
SCALE 1:50

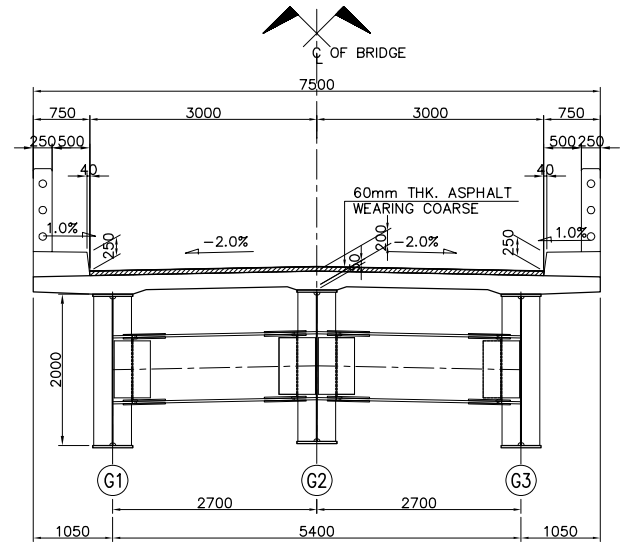

5 - SECTION @ C1~C7
SCALE 1:50

DIRECTORATE GENERAL OF HIGHWAY MINISTRY OF PUBLIC WORKS THE REPUBLIC OF INDONESIA	JICA JAPAN INTERNATIONAL COOPERATION AGENCY	KATAHIRA & ENGINEERS INTERNATIONAL	THE BASIC DESIGN STUDY ON THE PROJECT FOR THE IMPROVEMENT OF BRIDGES IN NIAS ISLAND IN THE REPUBLIC OF INDONESIA	TITLE : GIDO SI'ITE BRIDGE GENERAL DIMENSION OF SUPERSTRUCTURE	SCALE : AS SHOWN	DRAWING No: 3-3

Rev.

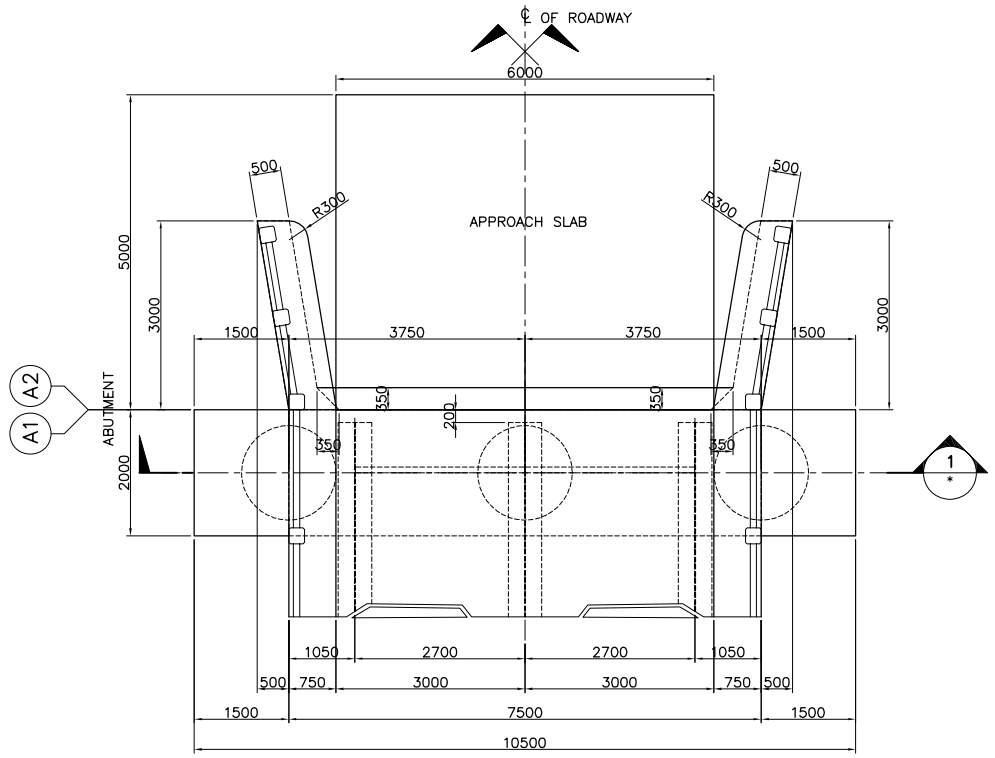

2 - PLAN
SCALE 1:60

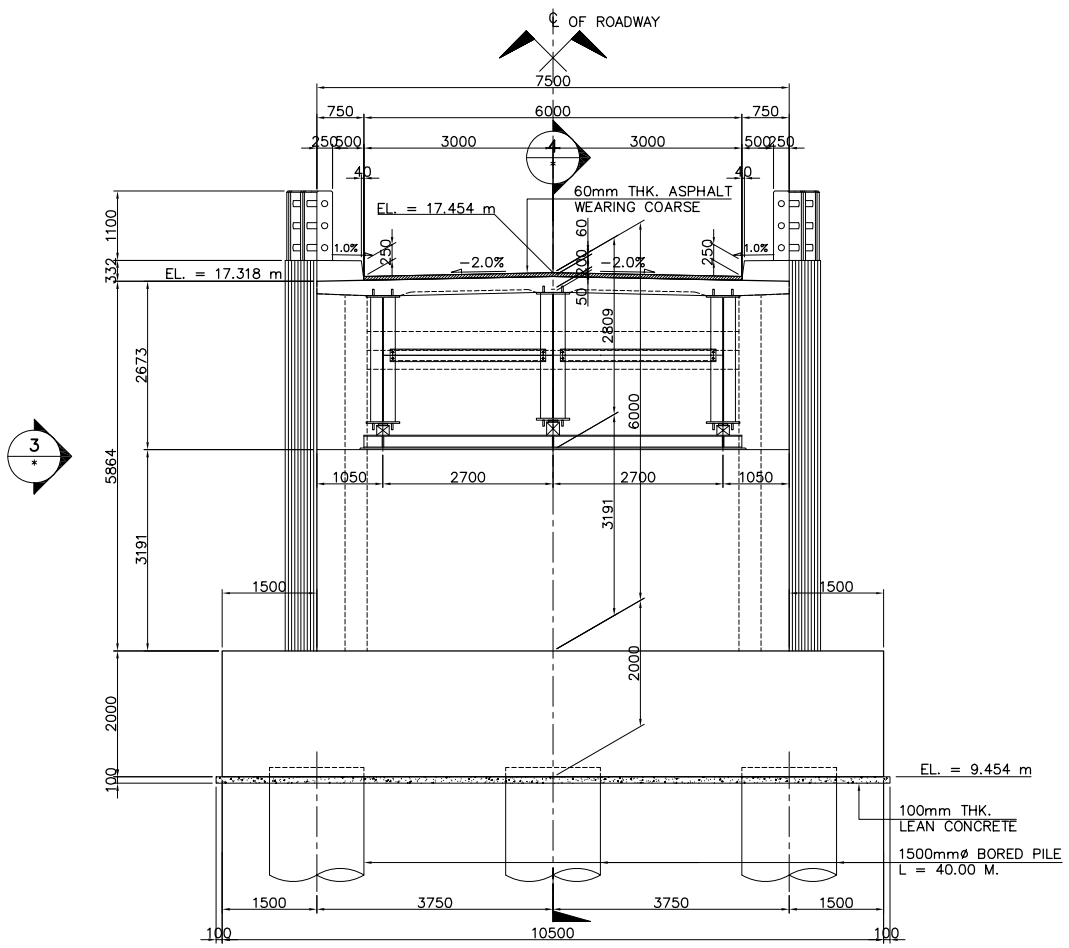

1 - ELEVATION
SCALE 1:60

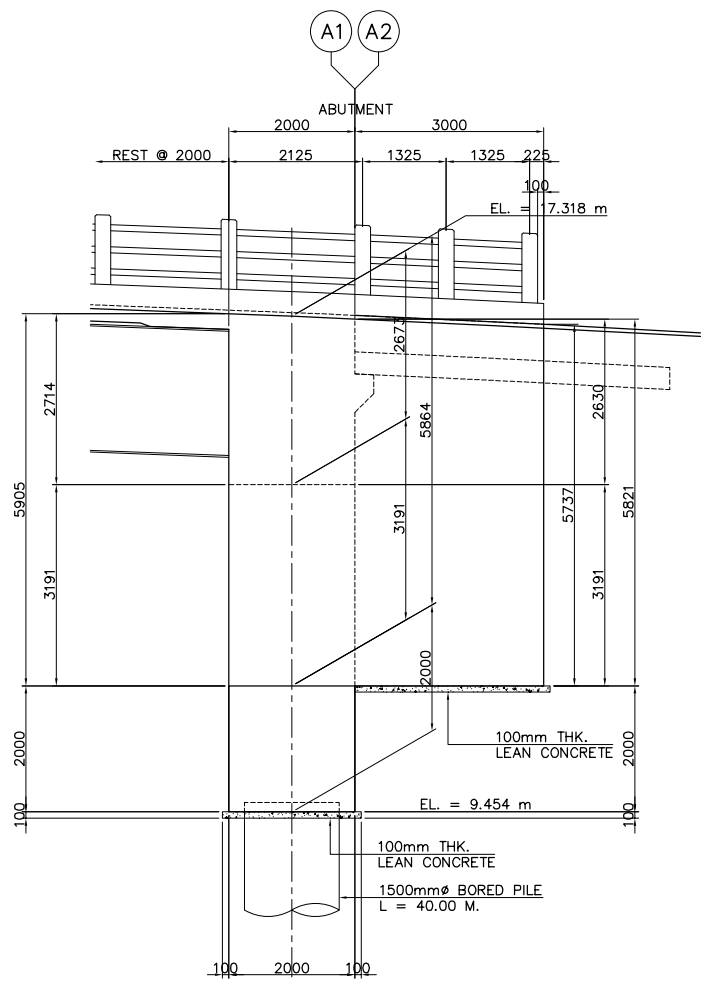

3 - ELEVATION
SCALE 1:60

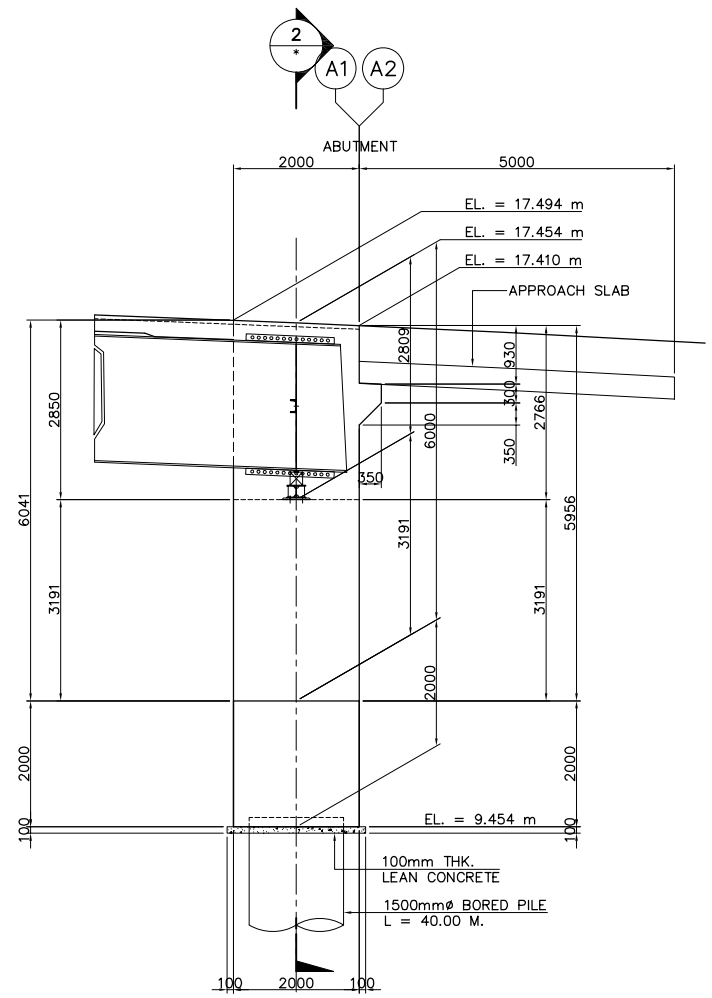

4 - ELEVATION
SCALE 1:60

DIRECTORATE GENERAL OF HIGHWAY MINISTRY OF PUBLIC WORKS THE REPUBLIC OF INDONESIA	JICA JAPAN INTERNATIONAL COOPERATION AGENCY	KATAHIRA & ENGINEERS INTERNATIONAL	THE BASIC DESIGN STUDY ON THE PROJECT FOR THE IMPROVEMENT OF BRIDGES IN NIAS ISLAND IN THE REPUBLIC OF INDONESIA	TITLE : GIDO SI'ITE BRIDGE SUBSTRUCTURE STRUCTURAL DIMENSION (ABUT. A1 AND A2)	SCALE : AS SHOWN	DRAWING No: 3-4 Rev.

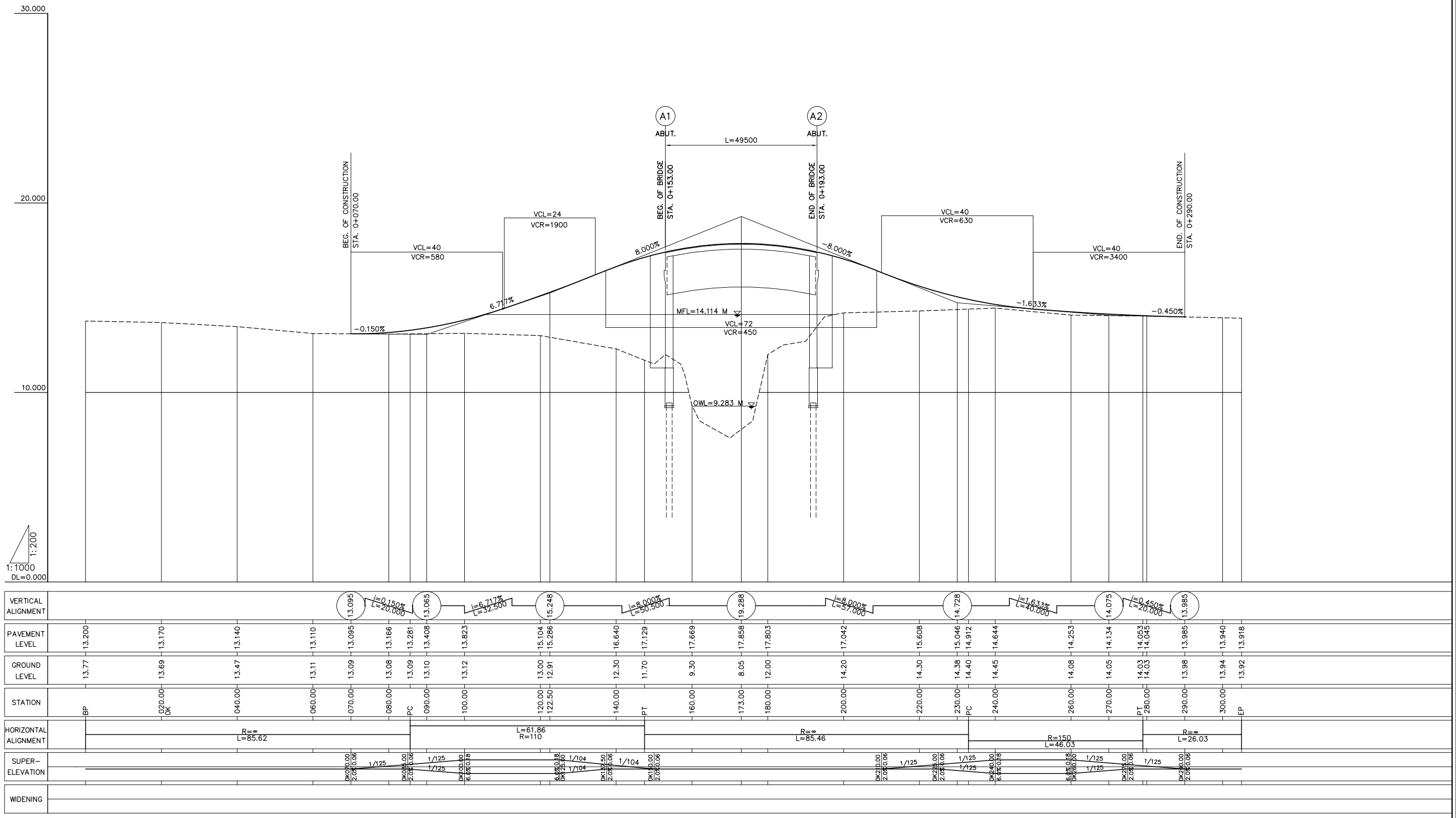

DIRECTORATE GENERAL OF HIGHWAY MINISTRY OF PUBLIC WORKS THE REPUBLIC OF INDONESIA	JICA JAPAN INTERNATIONAL COOPERATION AGENCY	KATAHIRA & ENGINEERS INTERNATIONAL	THE BASIC DESIGN STUDY ON THE PROJECT FOR THE IMPROVEMENT OF BRIDGES IN NIAS ISLAND IN THE REPUBLIC OF INDONESIA	TITLE : GIDO SI'ITE BRIDGE APPROACH ROAD PROFILE	SCALE : H = 1:1000 V = 1:200	DRAWING No: 3-5 Rev.

NO.0K120.0000
GH=13.12
PH=15.104

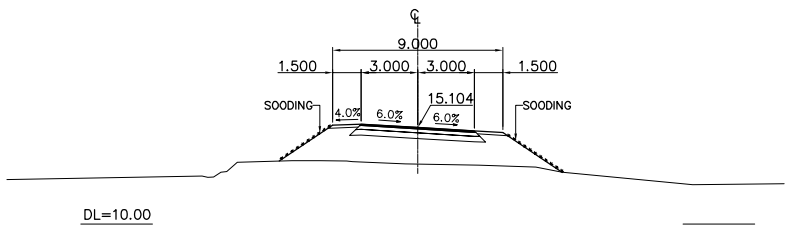

NO.0K100.0000
GH=13.12
PH=13.823

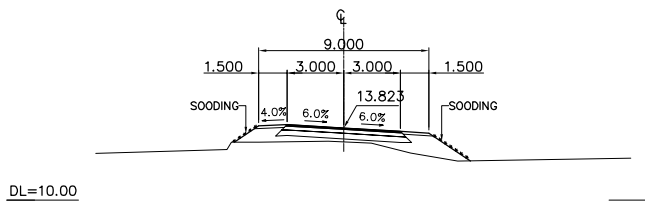

NO.0K080.0000
GH=13.08
PH=13.166

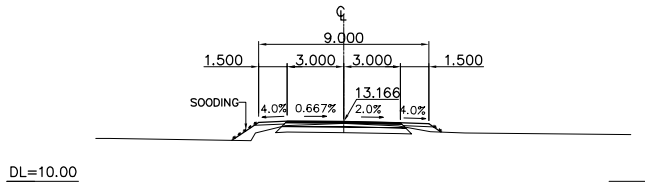

NO.0K060 (BP)
GH=13.095
PH=13.095

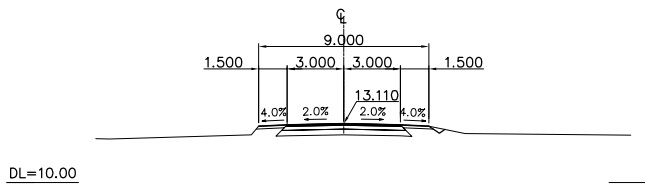

NO.0K220.0000
GH=14.30
PH=15.608

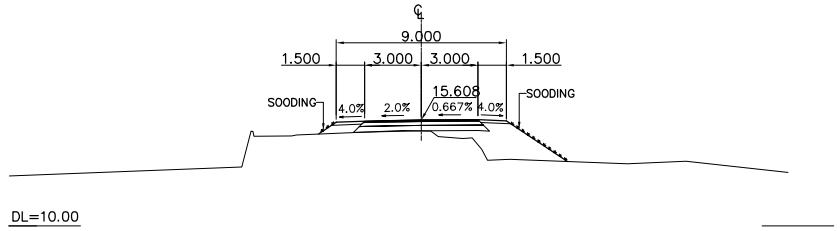

NO.0K200.0000
GH=14.30
PH=17.042

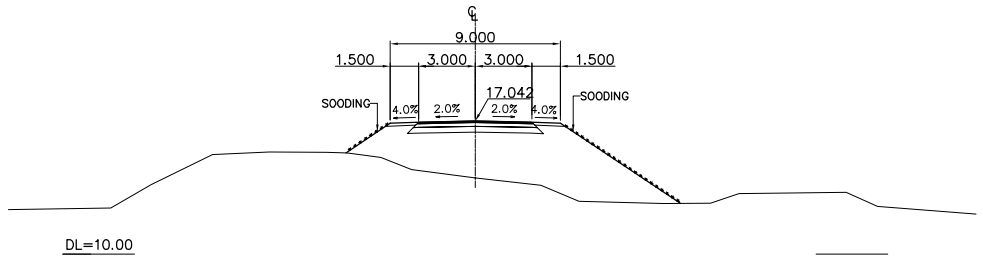

NO.0K150.0000
GH=11.50
PH=17.266

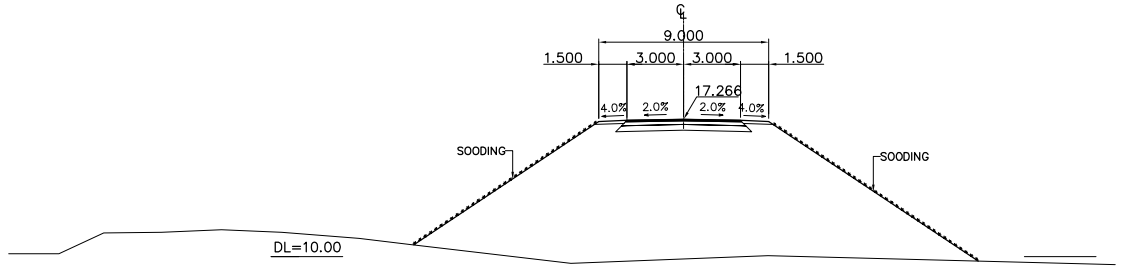

NO.0K140.0000
GH=12.30
PH=16.640

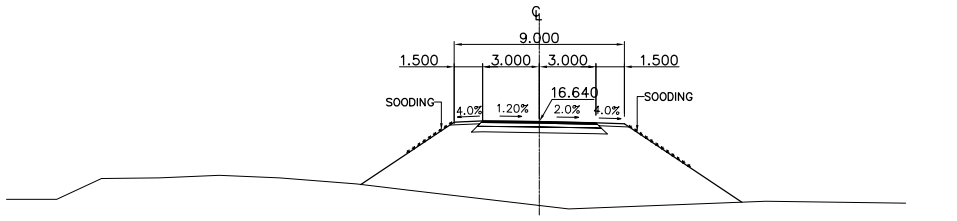

NO.0K290 (EP)
GH=13.98
PH=13.985

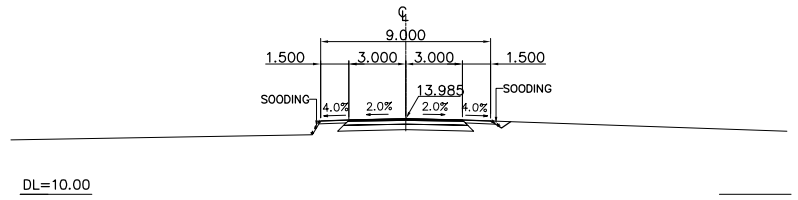

NO.0K280.0000
GH=14.03
PH=14.045

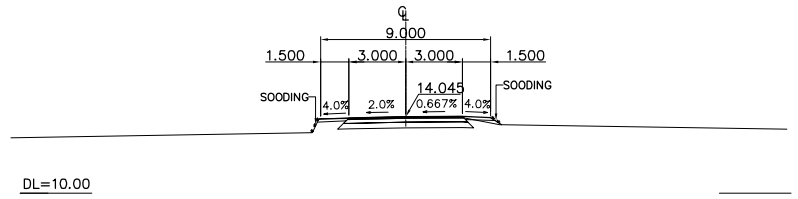

NO.0K260.0000
GH=14.08
PH=14.253

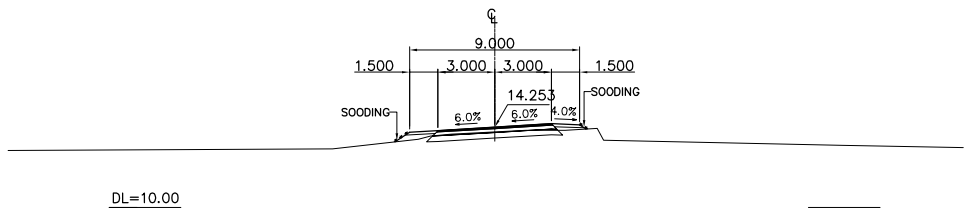

NO.0K240.0000
GH=14.45
PH=14.644

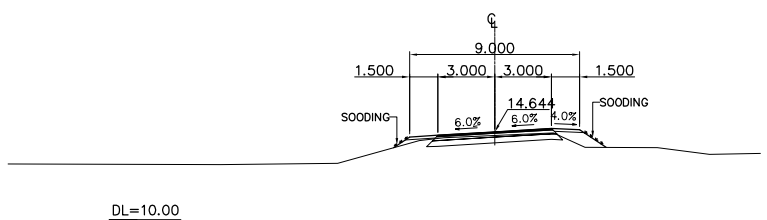

DIRECTORATE GENERAL OF HIGHWAY MINISTRY OF PUBLIC WORKS THE REPUBLIC OF INDONESIA	JICA JAPAN INTERNATIONAL COOPERATION AGENCY	KEI KATAHIRA & ENGINEERS INTERNATIONAL	THE BASIC DESIGN STUDY ON THE PROJECT FOR THE IMPROVEMENT OF BRIDGES IN NIAS ISLAND IN THE REPUBLIC OF INDONESIA	TITLE : GIDO SI'ITE BRIDGE APPROACH ROAD CROSS SECTIONS	SCALE : 1 : 400	DRAWING No: 3-6 Rev.