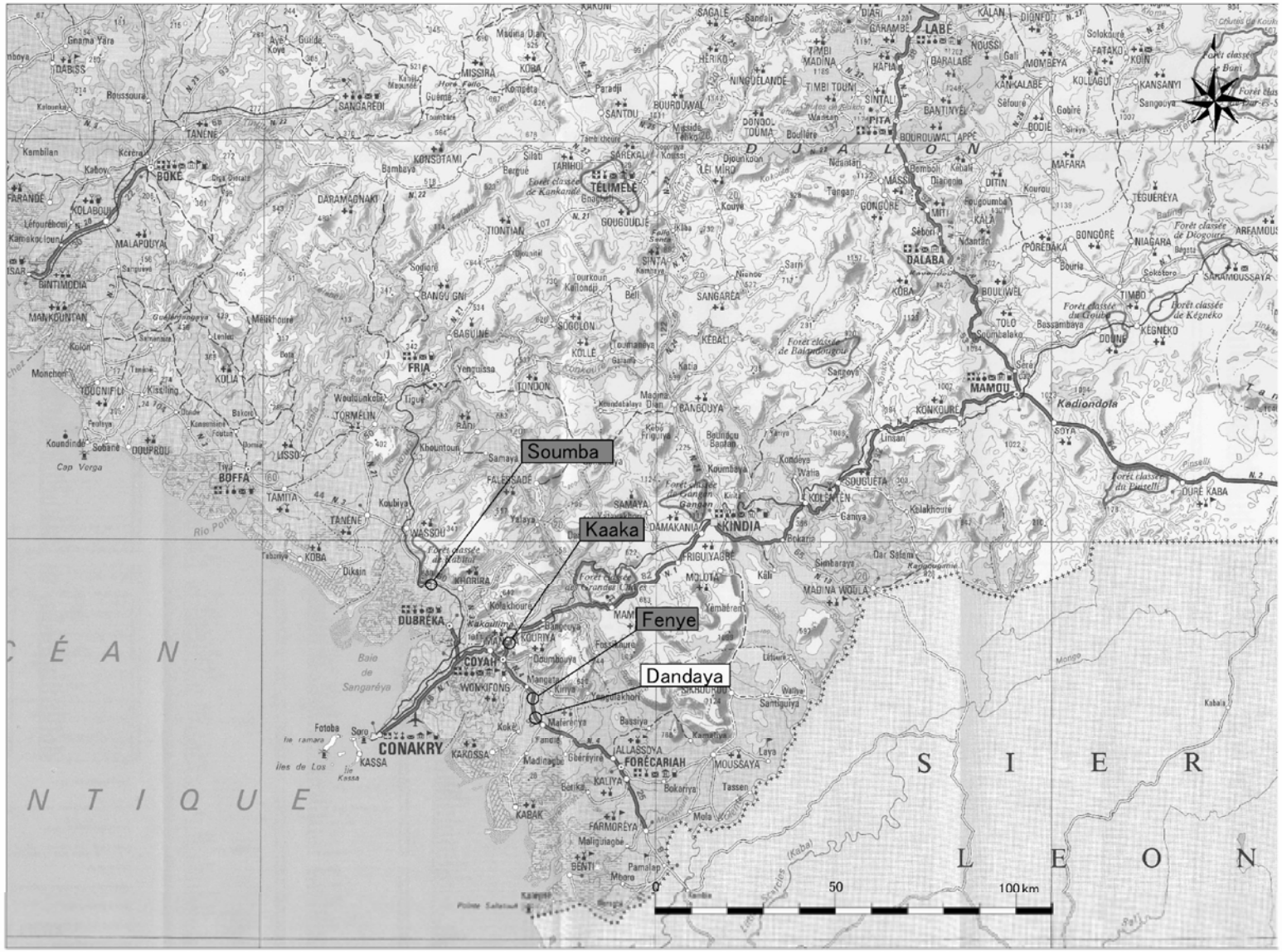


| | | | | | |
|---|---|---|---|---|---|
| ROAD INVESTMENT DEPARTMENT<br>MINISTRY OF PUBLIC WORKS, URBANIZATION AND HABITAT | BASIC DESIGN ON THE PROJECT FOR<br>REHABILITATION OF BRIDGES ON ARTERIAL<br>NATIONAL ROADS IN THE REPUBLIC OF GUINEA | JAPAN INTERNATIONAL COOPERATION AGENCY<br>KATAHIRA & ENGINEERS INTERNATIONAL | TITLE: DANDAYA BRIDGE<br>LOCATION MAP | SCALE: | DRAWING No.<br>D-1 |

# COORDINATION DRAWING

(DANDAYA BRIDGE)

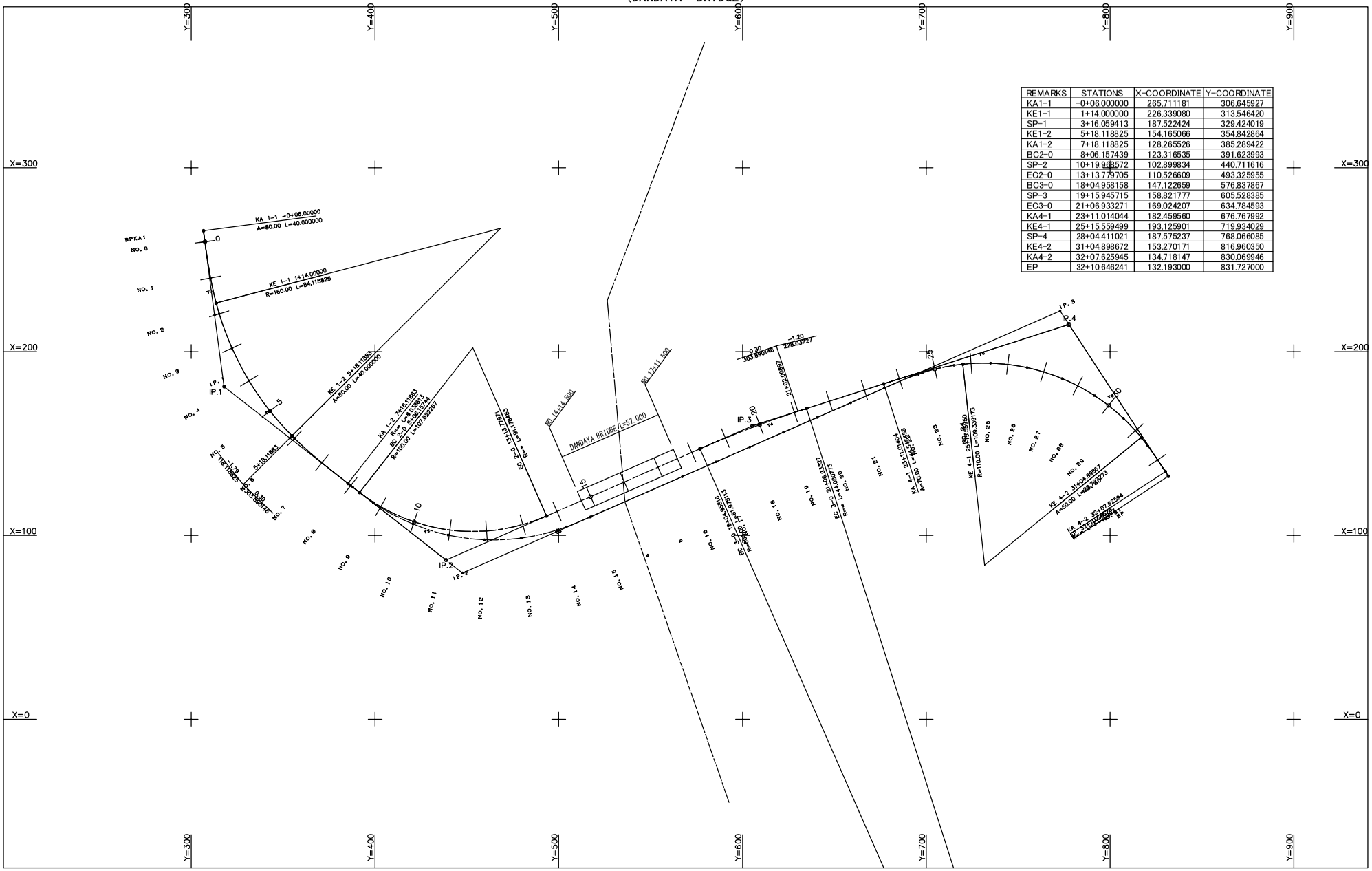


| REMARKS | STATIONS | X-COORDINATE | Y-COORDINATE |
|---|---|---|---|
| KA1-1 | -0+06.000000 | 265.711181 | 306.645927 |
| KE1-1 | 1+14.000000 | 226.339080 | 313.546420 |
| SP-1 | 3+16.059413 | 187.522424 | 329.424019 |
| KE1-2 | 5+18.118825 | 154.165066 | 354.842864 |
| KA1-2 | 7+18.118825 | 128.265526 | 385.289422 |
| BC2-0 | 8+06.157439 | 123.316535 | 391.623993 |
| SP-2 | 10+19.96[illegible]572 | 102.899834 | 440.711616 |
| EC2-0 | 13+13.779705 | 110.526609 | 493.325955 |
| BC3-0 | 18+04.958158 | 147.122659 | 576.837867 |
| SP-3 | 19+15.945715 | 158.821777 | 605.528385 |
| EC3-0 | 21+06.933271 | 169.024207 | 634.784593 |
| KA4-1 | 23+11.014044 | 182.459560 | 676.767992 |
| KE4-1 | 25+15.559499 | 193.125901 | 719.934029 |
| SP-4 | 28+04.411021 | 187.575237 | 768.066085 |
| KE4-2 | 31+04.898672 | 153.270171 | 816.960350 |
| KA4-2 | 32+07.625945 | 134.718147 | 830.069946 |
| EP | 32+10.646241 | 132.193000 | 831.727000 |

| | | | | | |
|---|---|---|---|---|---|
| ROAD INVESTMENT DEPARTMENT<br>MINISTRY OF PUBLIC WORKS, URBANIZATION AND HABITAT | BASIC DESIGN ON THE PROJECT FOR<br>REHABILITATION OF BRIDGES ON ARTERIAL<br>NATIONAL ROADS IN THE REPUBLIC OF GUINEA | JAPAN INTERNATIONAL COOPERATION AGENCY<br>KATAHIRA & ENGINEERS INTERNATIONAL | TITLE : DANDAYA BRIDGE<br>COORDINATION DREWING | SCALE :<br>S=1:1000 | DRAWING No:<br>D-2 |

# PLAN AND PROFILE
## (DANDAYA BRIDGE)

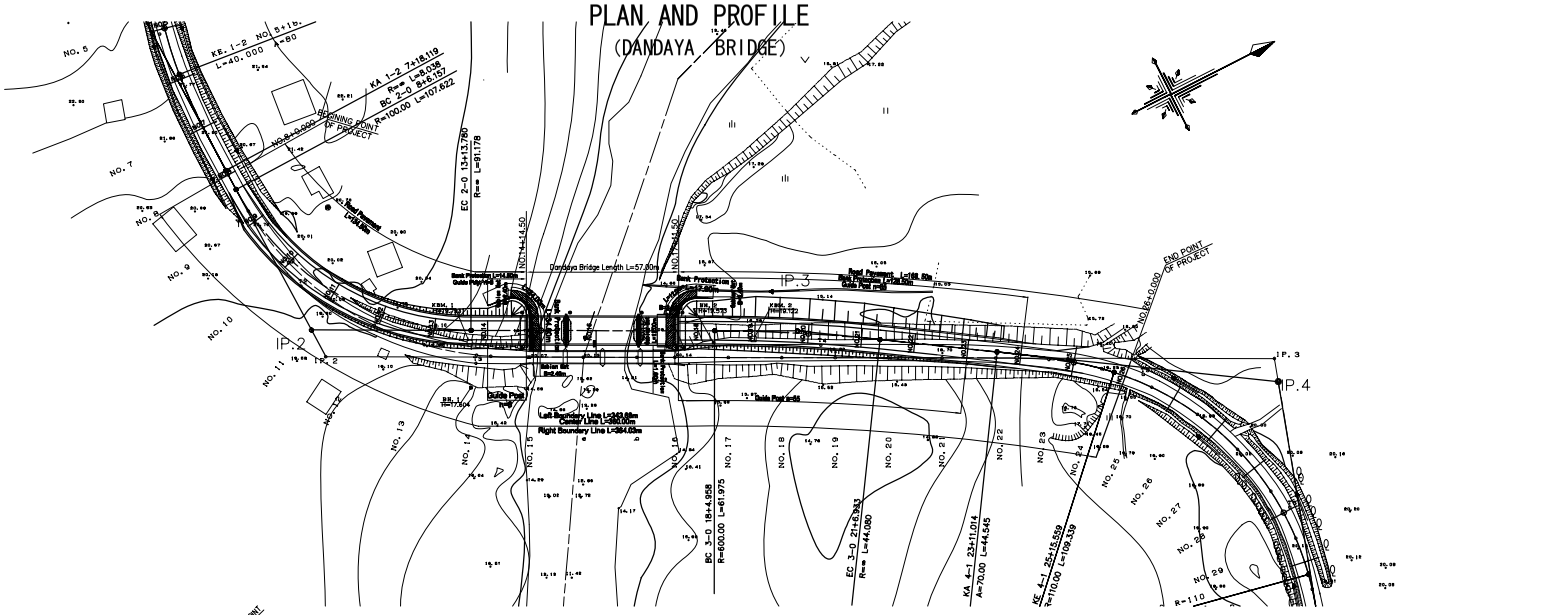


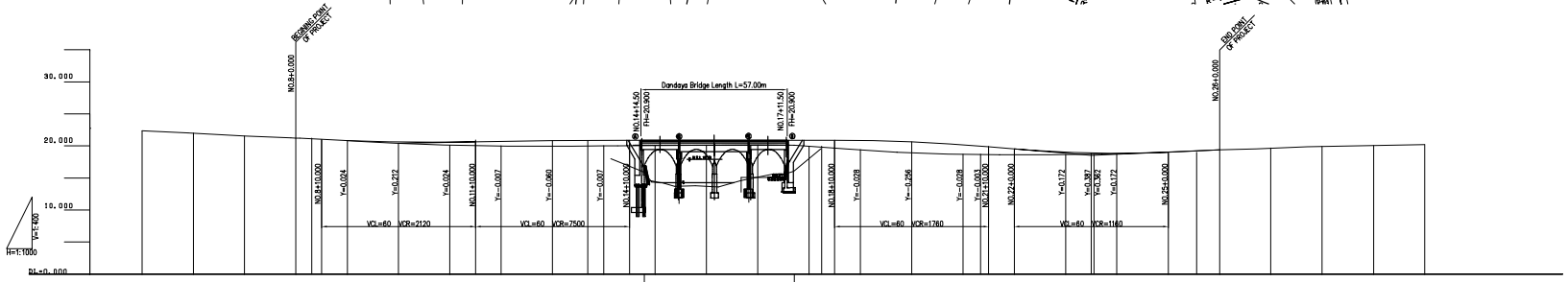


| | | | | | | | | | | | | | | | | | | | | | | | | | | | | | | |
|---|---|---|---|---|---|---|---|---|---|---|---|---|---|---|---|---|---|---|---|---|---|---|---|---|---|---|---|---|---|---|
| VERTICAL ALIGNMENT | i=2.030% | | | 20.420 | i=0.800% L=60.00 | | 20.900 | | | | | | | | 20.900 | i=3.414% L=70.00 | | 18.510 | | i=1.750% | | | | | | | | | | |
| PAVEMENT HEIGHT | | | | 21.232 | 21.107 | 20.850 | 20.632 | 20.604 | 20.733 | 20.840 | 20.883 | 20.893 | 20.900 | 20.900 | 20.900 | 20.900 | 20.900 | 20.872 | 20.644 | 20.189 | 19.979 | 19.534 | 19.024 | 18.889 | 18.857 | 19.035 | 19.307 | 19.385 | | |
| GROUND HEIGHT | 22.369 | 21.995 | 21.574 | 21.232 | | 20.826 | 20.415 | 20.111 | 20.016 | 19.926 | 17.620 | 16.440 | 15.750 | 15.080 | 16.380 | 17.690 | 17.460 | 18.780 | 18.730 | 18.690 | | 18.840 | 19.035 | 19.385 | | | | | | |
| INTERVAL | 20.000 | 20.000 | 20.000 | 20.000 | 6.157 | 13.843 | 20.000 | 20.000 | 20.000 | 20.000 | 13.780 | 6.220 | 20.000 | 20.000 | 20.000 | 20.000 | 4.958 | 15.042 | 20.000 | 20.000 | 6.933 | 13.067 | 20.000 | 11.014 | 8.986 | 20.000 | 15.560 | 4.440 | 20.000 | 20.000 | 20.000 | 20.000 |
| STATION | NO.5 | NO.6 | NO.7 | NO.8 | BC.2 | NO.9 | NO.10 | NO.11 | NO.12 | NO.13 | EC.2 | NO.14 | NO.15 | NO.16 | NO.17 | NO.18 | BC.3 | NO.19 | NO.20 | NO.21 | EC.3 | NO.22 | NO.23 | KA.4-1 | NO.24 | NO.25 | KE.4-1 | NO.26 | NO.27 | NO.28 | NO.29 | NO.30 |
| HORIZONTAL CURVATURE | | | R=∞ L=8.0386 | | | IP.2 IA=61°39'46.8" R=100.000m L=107.622m | | | | | | R=∞ L=91.1785 | | | | | IP.3 IA=5°55'5.5" R=600.000m L=61.975m | | | | | R=∞ L=44.0808 | | L=44.545 A=70.000 | | | | L=109.339 R=110.000 | | | | |
| SUPER ELEVATION | | 6.0006.000 | 3.000 | 3.000 | 3.000 | 3.000 | | | | 6.0006.000 | | 3.000 | 3.000 | 3.000 | | | 3.000 | 3.0003.000 | | 3.000 | 3.000 | 3.000 | 3.000 | 3.000 | | 3.0003.000 | 6.0006.000 | | | | | |

| | | | | | |
|---|---|---|---|---|---|
| ROAD INVESTMENT DEPARTMENT<br>MINISTRY OF PUBLIC WORKS, URBANIZATION AND HABITAT | BASIC DESIGN ON THE PROJECT FOR<br>REHABILITATION OF BRIDGES ON ARTERIAL<br>NATIONAL ROADS IN THE REPUBLIC OF GUINEA | JAPAN INTERNATIONAL COOPERATION AGENCY<br>KATAHIRA & ENGINEERS INTERNATIONAL | TITLE : DANDAYA BRIDGE<br>**PLAN AND PROFILE** | SCALE :<br>H=1:1000<br>V=1: 400 | DRAWING No:<br>D-3 |

# GENERAL VIEW OF DANDAYA BRIDGE

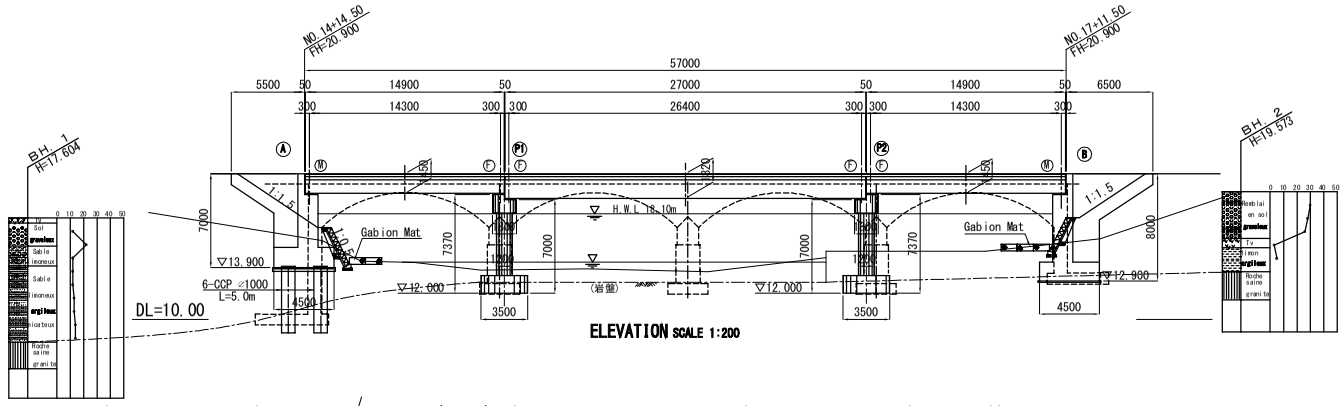


ELEVATION SCALE 1:200

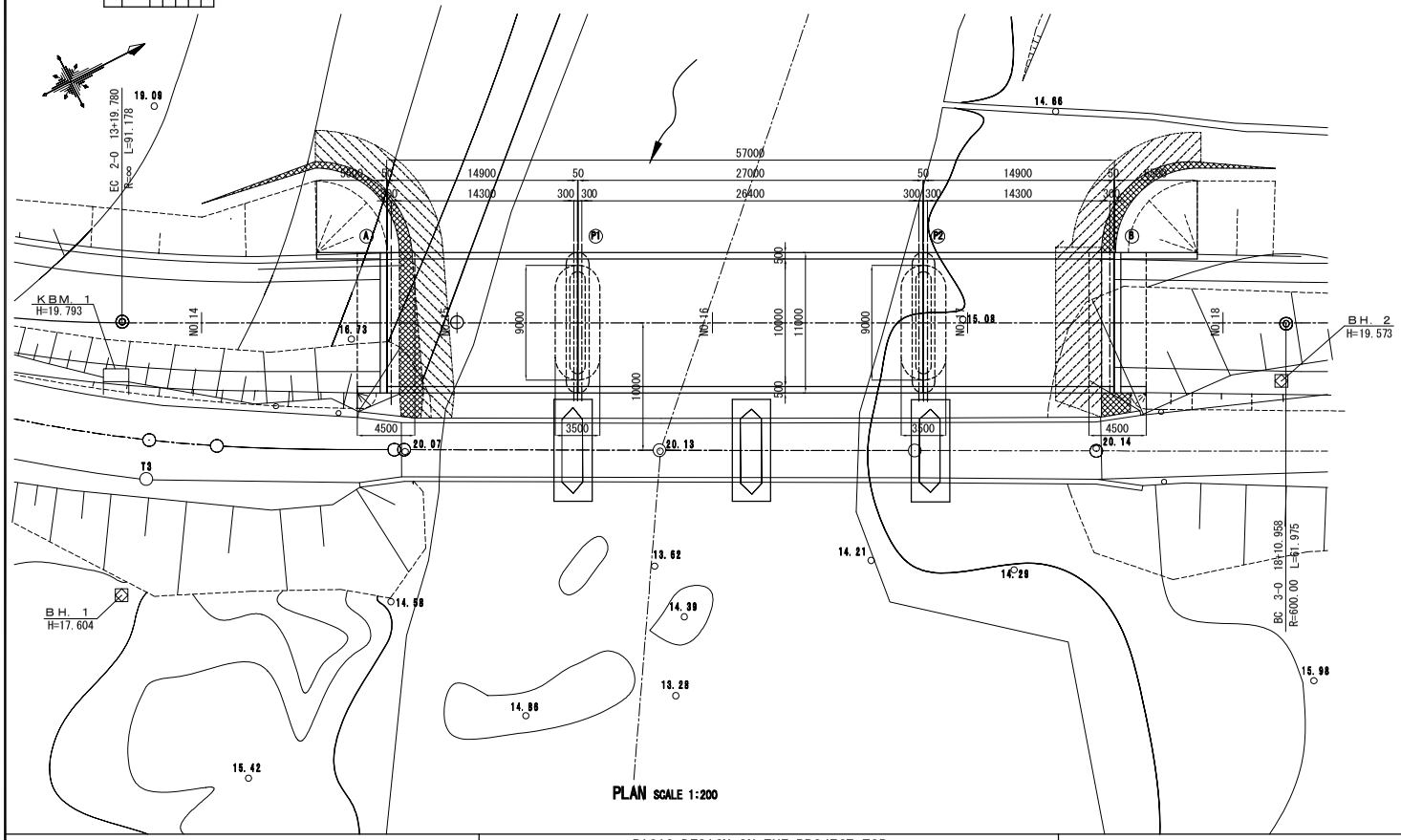


PLAN SCALE 1:200

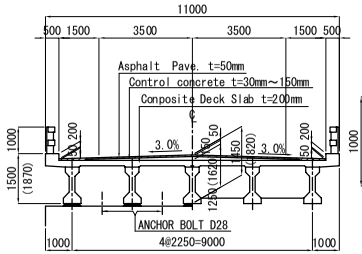


A～P1, P2～B(P1～P2)

BRIDGE CROSS SECTION SCALE 1:100

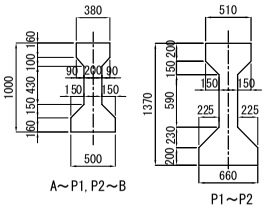


A～P1, P2～B

P1～P2

DETAIL SCALE 1:30

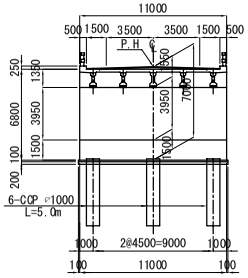


Ⓐ

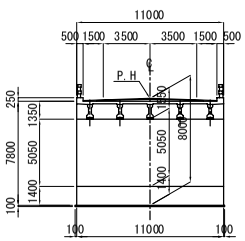


Ⓑ

ABUTMENTS SCALE 1:200

ABUTMENT PIER

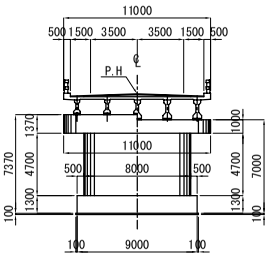


PIERS SCALE 1:200

P1 P2

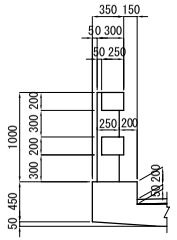

DETAIL SCALE 1:30

## DESIGN CRITERIA

| | | |
|---|---|---|
| ROAD CLASS | | NATIONAL ROAD |
| DEGING SPEED | | V=50km/h |
| TYPE OF SUPERSTRUCTURE | | 3-SPAN CONNECTING PC-COMPOSITE GIRDER |
| BRIDGE LENGTH | | 57.000m |
| SPAN LENGTH | | 14.300m + 26.400m + 14.300m |
| LIVE LOAD | | BPEL 91 A-LIVE ROAD (FRENCH)<br>LIVE LOAD TYPE-B(JAPAN) |
| ROADWAY WIDTH | | 2 x 3.500m = 7.000m |
| SHOULDER WIDTH | | 2×1.500m |
| CROSS SLOPE | | 3% 3% |
| SEISMIC COEFFICIENT | | kh=0.100 |
| MATERIAL STRENGTH | GIRDER CON. | $\sigma ck=36N/mm^2$ |
| | CROSS BEAM CON. | $\sigma ck=30N/mm^2$ |
| | SLAB、CROSS | $\sigma ck=24N/mm^2$ |
| | WIRE FOR PC. | $fpy=1600N/mm^2$ |
| | REINFORCEMENT | $fy=295N/mm^2$(SD295) YIELD STRESS |
| | SUB STRUCTURE CON. | $\sigma ck=24N/mm^2$ |
| DESING STANDARD | | SPECIFICATION FOR HIGWAY BRIDGES JAPAN ASSOCIATION Ⅰ～Ⅴ (MARCH-2002) |

| | | | | | |
|---|---|---|---|---|---|
| ROAD INVESTMENT DEPARTMENT<br>MINISTRY OF PUBLIC WORKS, URBANIZATION AND HABITAT | BASIC DESIGN ON THE PROJECT FOR<br>REHABILITATION OF BRIDGES ON ARTERIAL<br>NATIONAL ROADS IN THE REPUBLIC OF GUINEA | JAPAN INTERNATIONAL COOPERATION AGENCY<br>KATAHIRA & ENGINEERS INTERNATIONAL | TITLE:<br>GENERAL VIEW OF DANDAYA BRIDGE | SCALE:<br>S=1:200 | DRAWING No:<br>D-4 |

# STRUCTURE DRAWING OF SUPERSTURUCTURE
(DANDAYA BRIDGE)

ELEVATION SCALE 1:150

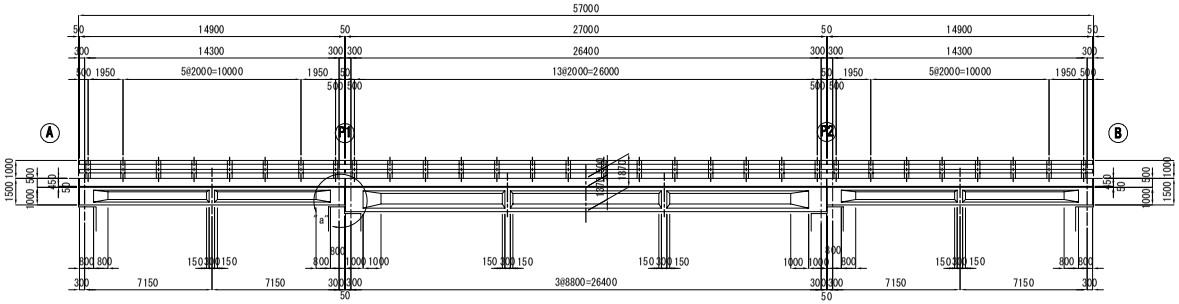


DETAIL SCALE 1:30

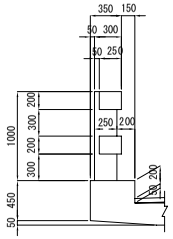

DETAIL SCALE 1:30

A～P1, P2～B

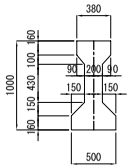

P1～P2

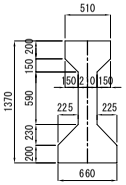

PLAN SCALE 1:150

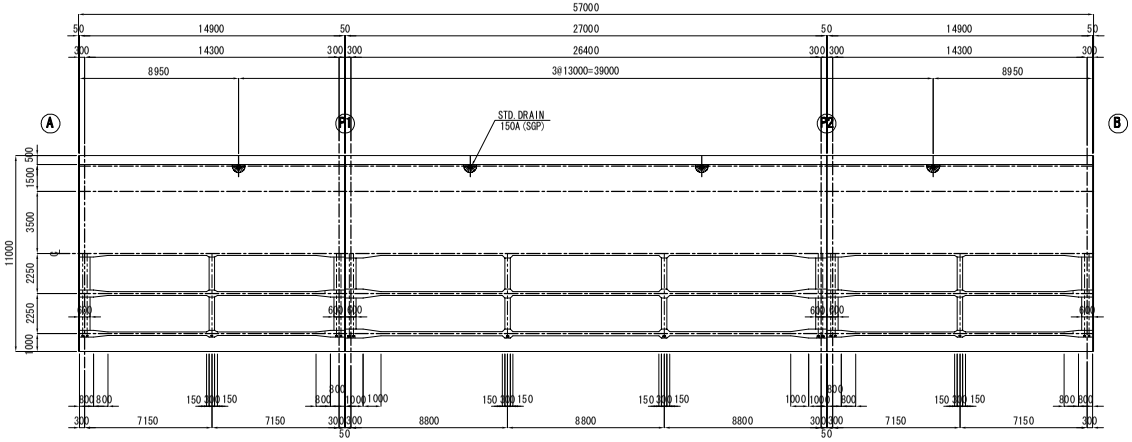


"a" DETAIL SCALE 1:30

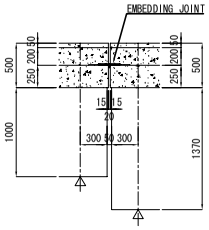


P1～P2(A～P1, P2～B)
STANDARD

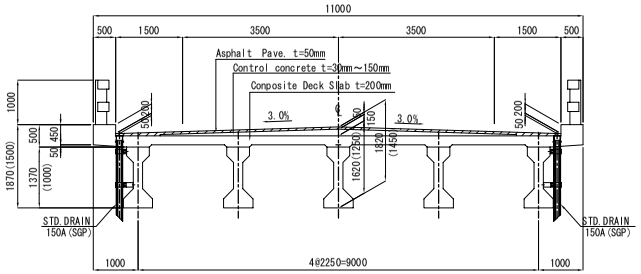


BRIDGE CROSS SECTION SCALE 1:60
P1～P2

END MIDDLE

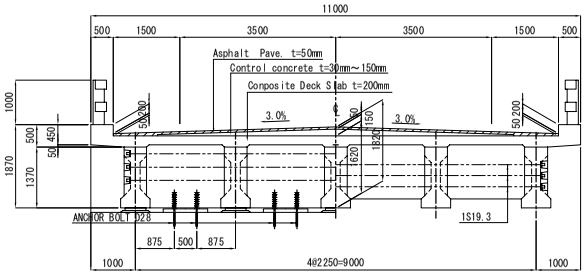


A～P1, P2～B

END MIDDLE

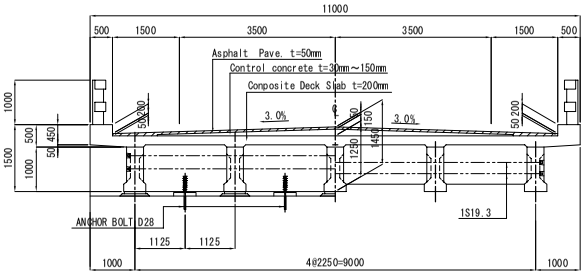


| | | | | | |
|---|---|---|---|---|---|
| ROAD INVESTMENT DEPARTMENT<br>MINISTRY OF PUBLIC WORKS, URBANIZATION AND HABITAT | BASIC DESIGN ON THE PROJECT FOR<br>REHABILITATION OF BRIDGES ON ARTERIAL<br>NATIONAL ROADS IN THE REPUBLIC OF GUINEA | JAPAN INTERNATIONAL COOPERATION AGENCY<br>KATAHIRA & ENGINEERS INTERNATIONAL | TITLE: DANDAYA BRIDGE<br>STRUCTURE DRAWING OF SUPERSTURUCTURE | SCALE:<br>S=1:150 | DRAWING No:<br>D-5 |

# DETAILS OF EXPANSION JOINT AND DRAINAGE
(DANDAYA BRIDGE)

Ⓟ1,Ⓟ2 SECTION SCALE 1:50

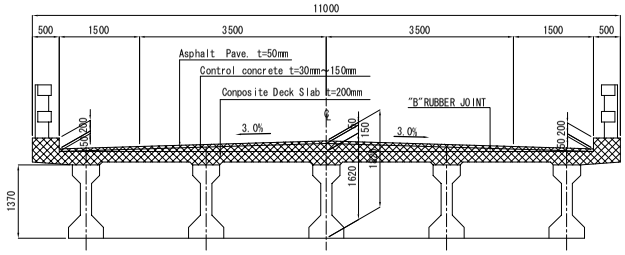


Ⓐ,Ⓑ SECTION SCALE 1:50

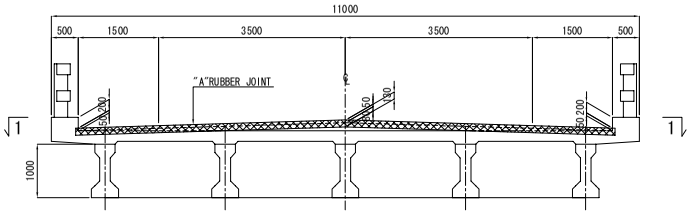


Ⓐ,Ⓑ PLAN SCALE 1:50
1 - 1

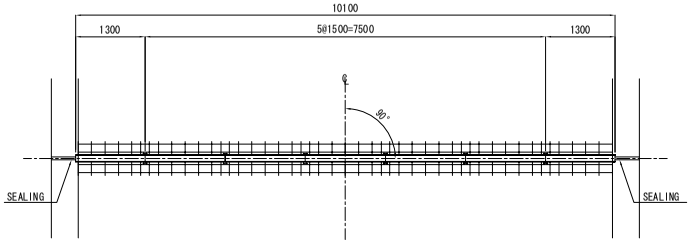


MARKING DIAGRAM SCALE 1:300

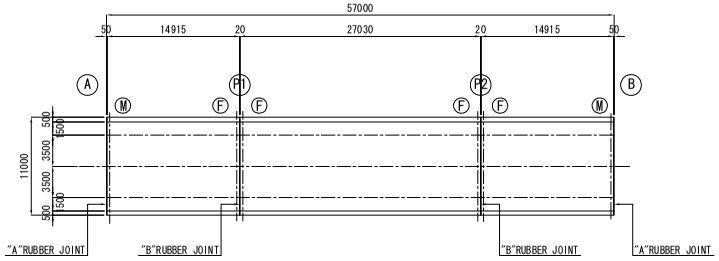


CROSS SECTION SCALE 1:5

"A"RUBBER JOINT FOR ROADWAY

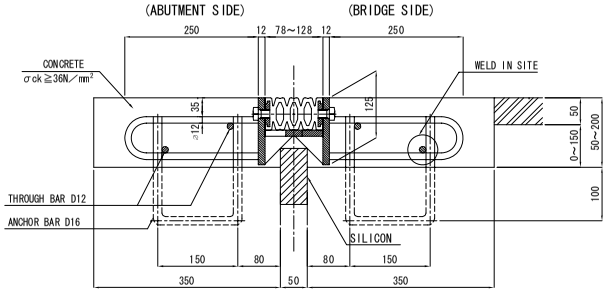


EXPANSION RANGE=50mm

"B"EMBEDDING JOINT

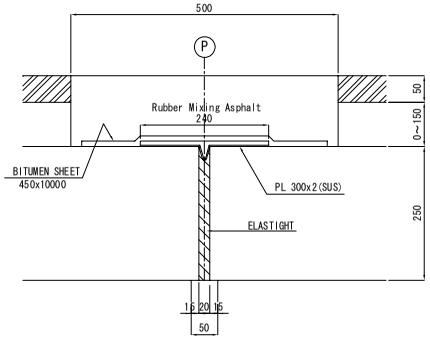


ANCHOR BAR UNDER CONCRETE SCALE 1:30

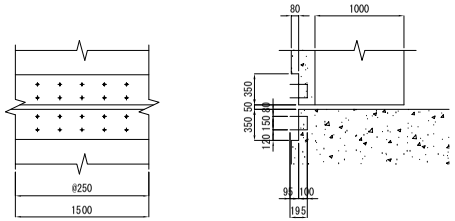


DRAINAGE SCALE 1:30

SECTION(A~P1,P2~B)

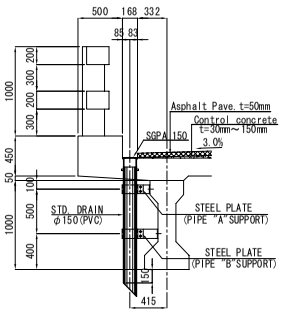


SECTION(P1~P2)

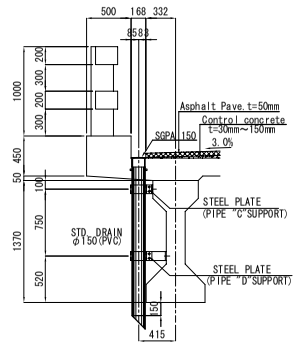


PLAN

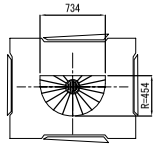


ANCHOR BAR SCALE 1:10

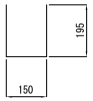


D16x540
ROAD WAY

SEALING SCALE 1:5

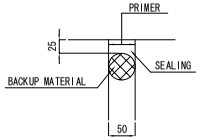


"A"(C)SUPPORT SCALE 1:10

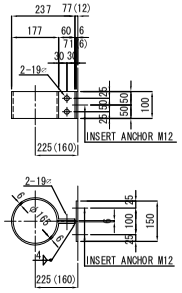


2-PL 100x6x651(SS400)
1-PL 100x6x131(66)(SS400)
1-PL 100x6x150
2-BN M16x40(SS400)
2-INSERT ANCHOR M12(SS400)

"B"(D)SUPPORT SCALE 1:10

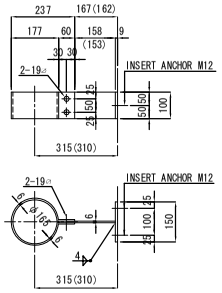


2-PL 100x6x651(SS400)
1-PL 100x6x218(213)(SS400)
1-PL 100x9x150
2-BN M16x40(SS400)
2-INSERT ANCHOR M12(SS400)

"A"MATERIAL OF EXPANSION JOINT

| MATERIAL | QUALITY | QUANTITY | | | REMARKS |
|---|---|---|---|---|---|
| | | Ⓐ | Ⓑ | TOTAL | |
| RUBBER JOINT | SS400 COMPOSITE RUBBER | 10.10 m | 10.10 m | 20.2 m | ROADWAY |
| SEALING | SILICON | 1.8 liter | 1.8 liter | 3.6 liter | |
| | | | | | |

"A"ANCHOR BAR

| SIZE | QUANTITY | | | WEIGHT | | REMARKS |
|---|---|---|---|---|---|---|
| | Ⓐ | Ⓑ | TOTAL | EACH | TOTAL | |
| D16x540 | 70 | 70 | 140 | 0.852 kg | 119.28 kg | ROADWAY |

"B"EMBEDDING MIXING OF EXPANSION JOINT

| EMBEDDING MIXING | QUALITY | QUANTITY | | | REMARKS |
|---|---|---|---|---|---|
| | | Ⓟ1 | Ⓟ2 | TOTAL | |
| BITUMEN SHEET | 450x10000 | 4.50 m2 | 4.50 m2 | 9.0 m2 | ROADWAY |
| SUS PL | (300x2x10000)x7930kg/m3x2 | 31.72 kg | 31.72 kg | 63.4 kg | |
| ELASTIGHT | t=20 | 3.85 m2 | 3.85 m2 | 7.70 m2 | |

| | | | | | | |
|---|---|---|---|---|---|---|
| ROAD INVESTMENT DEPARTMENT<br>MINISTRY OF PUBLIC WORKS, URBANIZATION AND HABITAT | BASIC DESIGN ON THE PROJECT FOR<br>REHABILITATION OF BRIDGES ON ARTERIAL<br>NATIONAL ROADS IN THE REPUBLIC OF GUINEA | JAPAN INTERNATIONAL COOPERATION AGENCY<br>KATAHIRA & ENGINEERS INTERNATIONAL | TITLE: DANDAYA BRIDGE<br>DETAILS OF EXPANSION JOINT AND DRAINAGE | SCALE:<br>S=1:5 | DRAWING No:<br>D-6 | Rv. |

# STRUCTURE DRAWING OF A ABUTMENT (DANDAYA BRIDGE)

SCALE 1:100

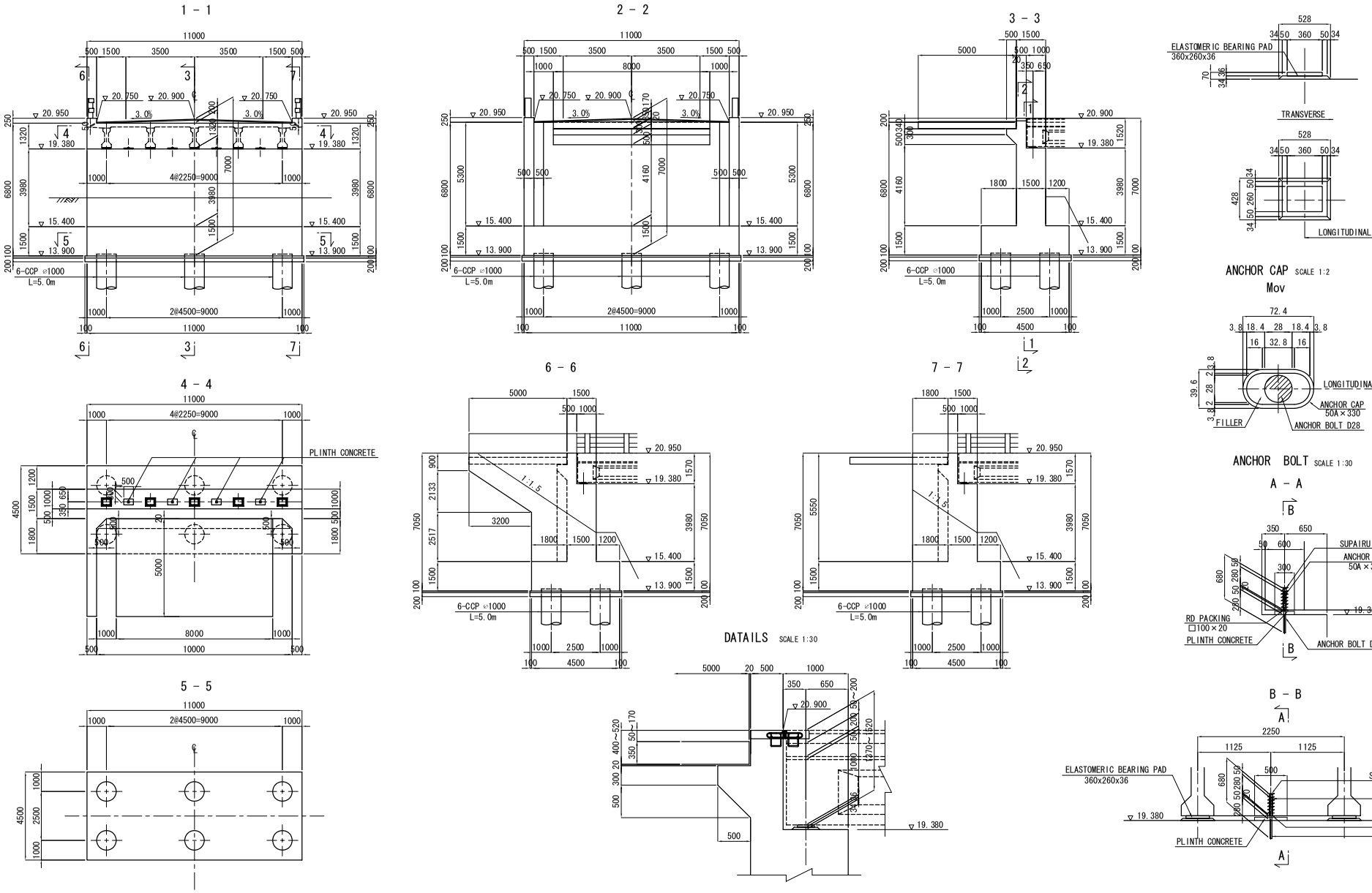


| ROAD INVESTMENT DEPARTMENT<br>MINISTRY OF PUBLIC WORKS, URBANIZATION AND HABITAT | BASIC DESIGN ON THE PROJECT FOR<br>REHABILITATION OF BRIDGES ON ARTERIAL<br>NATIONAL ROADS IN THE REPUBLIC OF GUINEA | JAPAN INTERNATIONAL COOPERATION AGENCY<br>KATAHIRA & ENGINEERS INTERNATIONAL | TITLE: DANDAYA BRIDGE<br>STRUCTURE DRAWING OF A ABUTMENT | SCALE:<br>S=1:100 | DRAWING No:<br>D-7 |
|---|---|---|---|---|---|

# STRUCTURE DRAWING OF B ABUTMENT (DANDAYA BRIDGE)

SCALE 1:100

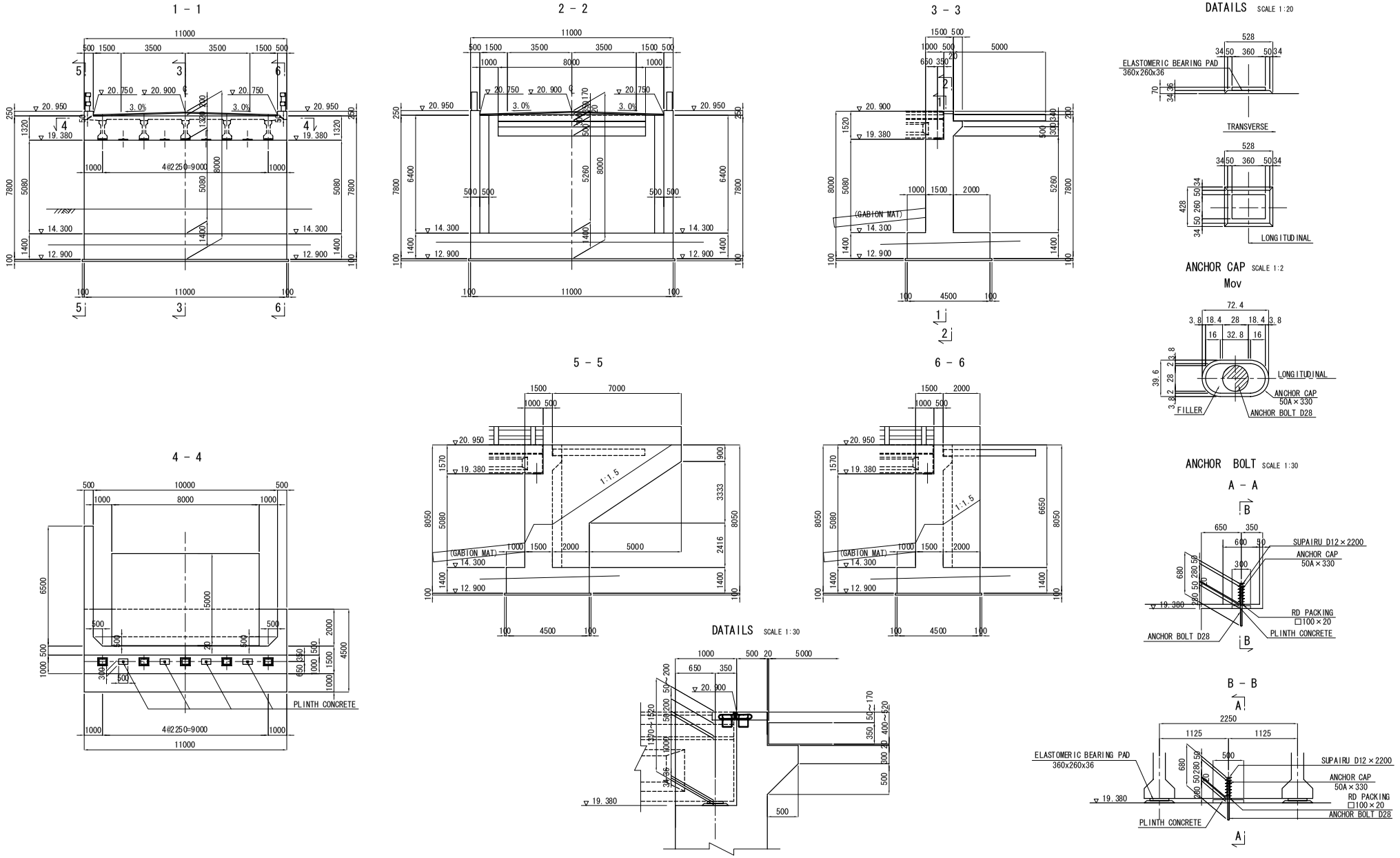


| ROAD INVESTMENT DEPARTMENT<br>MINISTRY OF PUBLIC WORKS, URBANIZATION AND HABITAT | BASIC DESIGN ON THE PROJECT FOR<br>REHABILITATION OF BRIDGES ON ARTERIAL<br>NATIONAL ROADS IN THE REPUBLIC OF GUINEA | JAPAN INTERNATIONAL COOPERATION AGENCY<br>KATAHIRA & ENGINEERS INTERNATIONAL | TITLE: DANDAYA BRIDGE<br>STRUCTURE DRAWING OF B ABUTMENT | SCALE:<br>S=1:100 | DRAWING No:<br>D-8 |
|---|---|---|---|---|---|

# STRUCTURE DRAWING OF P1 PIER (DANDAYA BRIDGE)

SCALE 1:100

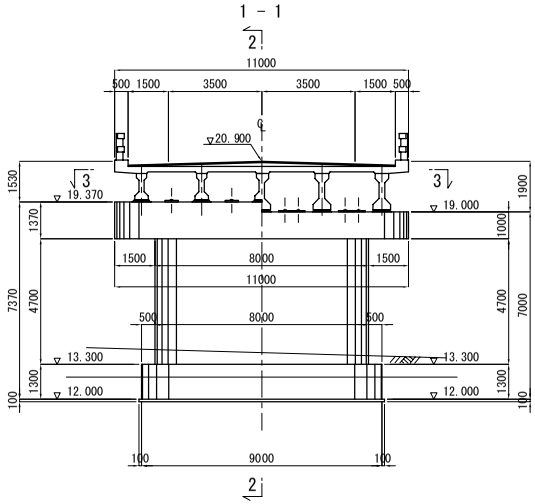


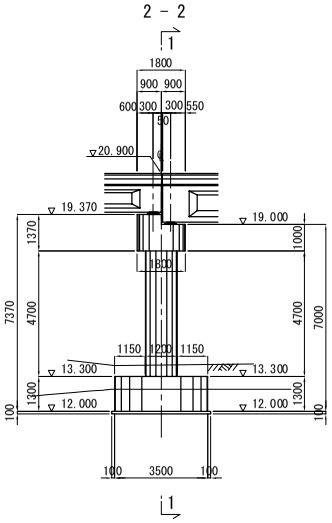


DATAILS SCALE 1:20

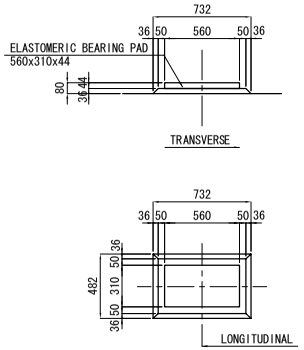


3 - 3

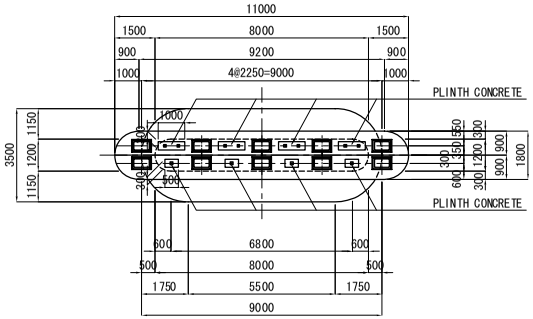


DATAILS SCALE 1:30

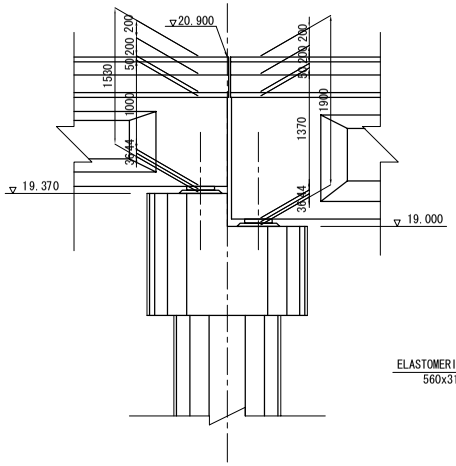


ANCHOR BOLT SCALE 1:30

A - A

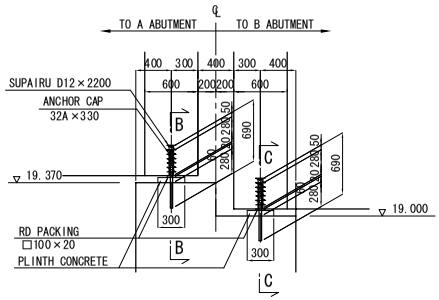


ANCHOR CAP SCALE 1:2

Fix

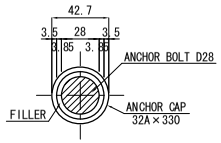


B - B

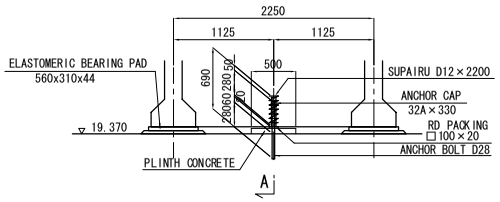


C - C

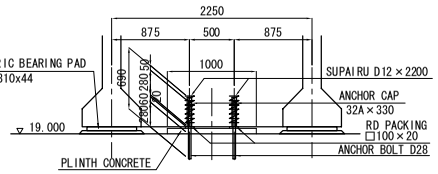


| | | | | | |
|---|---|---|---|---|---|
| ROAD INVESTMENT DEPARTMENT<br>MINISTRY OF PUBLIC WORKS, URBANIZATION AND HABITAT | BASIC DESIGN ON THE PROJECT FOR<br>REHABILITATION OF BRIDGES ON ARTERIAL<br>NATIONAL ROADS IN THE REPUBLIC OF GUINEA | JAPAN INTERNATIONAL COOPERATION AGENCY<br>KATAHIRA & ENGINEERS INTERNATIONAL | TITLE: DANDAYA BRIDGE<br>STRUCTURE DRAWING OF P1 PIER | SCALE:<br>S=1:100 | DRAWING No:<br>D-9 |

# STRUCTURE DRAWING OF P2 PIER (DANDAYA BRIDGE)

SCALE 1:100

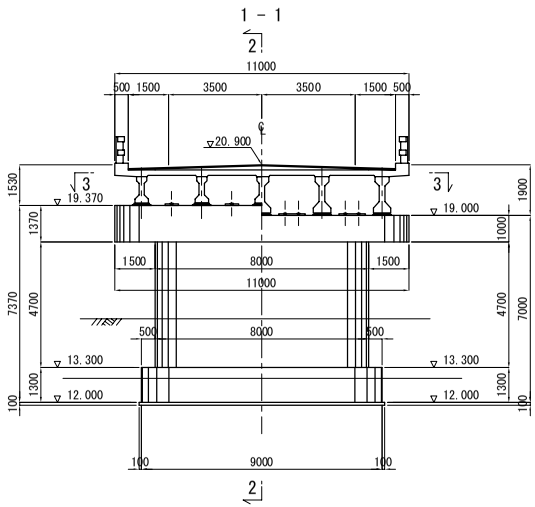


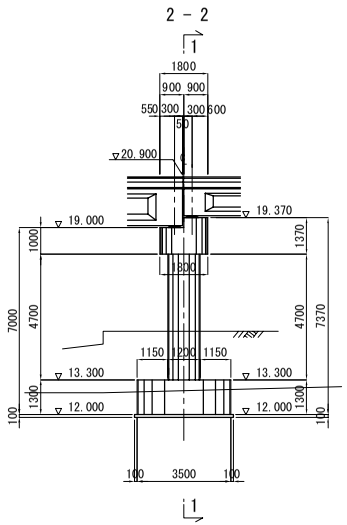


DATAILS SCALE 1:20

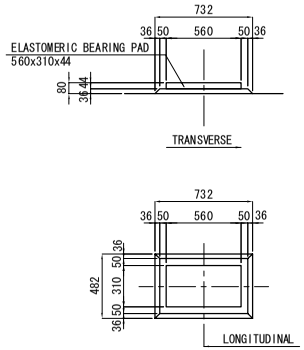


ANCHOR BOLT SCALE 1:30

A - A

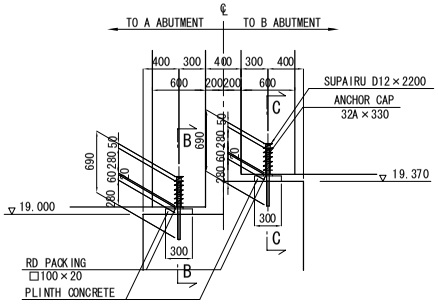


ANCHOR CAP SCALE 1:2

Fix

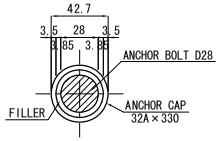


3 - 3

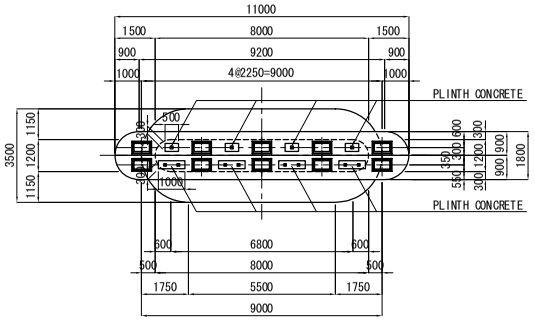


DATAILS SCALE 1:30

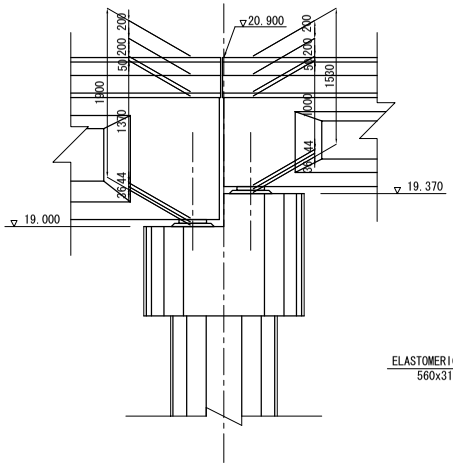


B - B

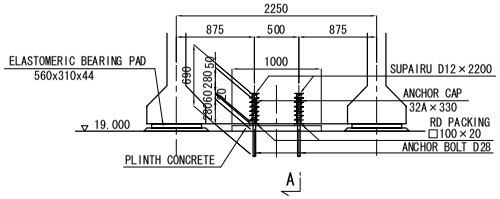


B - B

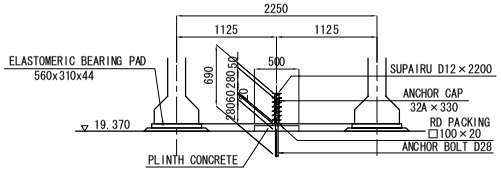


| | | | | | |
|---|---|---|---|---|---|
| ROAD INVESTMENT DEPARTMENT<br>MINISTRY OF PUBLIC WORKS, URBANIZATION AND HABITAT | BASIC DESIGN ON THE PROJECT FOR<br>REHABILITATION OF BRIDGES ON ARTERIAL<br>NATIONAL ROADS IN THE REPUBLIC OF GUINEA | JAPAN INTERNATIONAL COOPERATION AGENCY<br>KATAHIRA & ENGINEERS INTERNATIONAL | TITLE: DANDAYA BRIDGE<br>STRUCTURE DRAWING OF P2 PIER | SCALE:<br>S=1:100 | DRAWING No:<br>D-10 |

# TYPICAL CROSS SECTION OF APPROACH ROAD

(DANDAYA BRIDGE)

## GENERAL SECTION

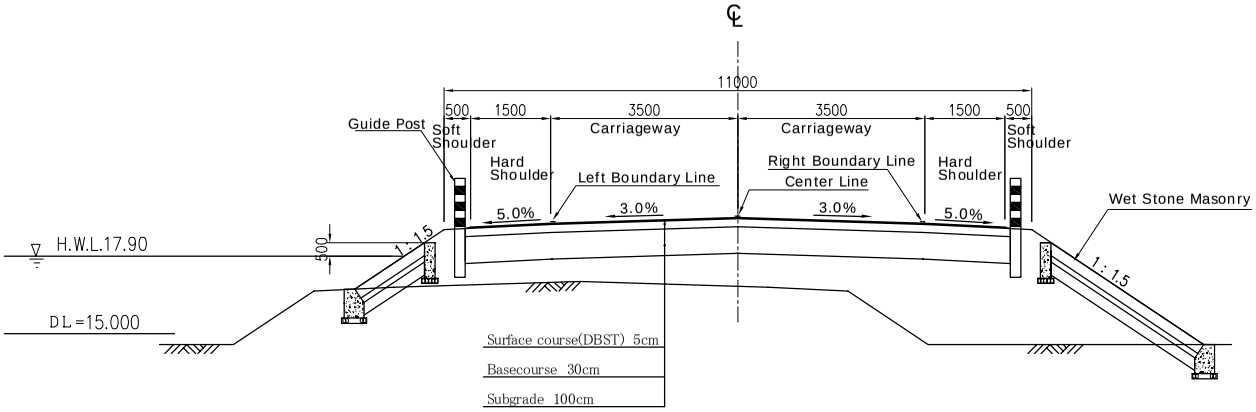


## SUPERELEVATED SECTION

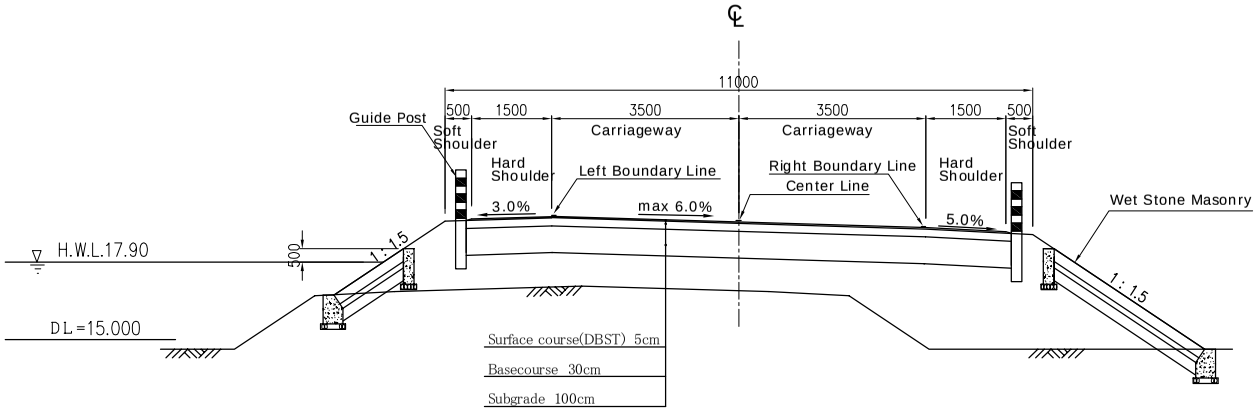


| | | | | | |
|---|---|---|---|---|---|
| ROAD INVESTMENT DEPARTMENT<br>MINISTRY OF PUBLIC WORKS, URBANIZATION AND HABITAT | BASIC DESIGN ON THE PROJECT FOR<br>REHABILITATION OF BRIDGES ON ARTERIAL<br>NATIONAL ROADS IN THE REPUBLIC OF GUINEA | JAPAN INTERNATIONAL COOPERATION AGENCY<br>KATAHIRA & ENGINEERS INTERNATIONAL | TITLE : DANDAYA BRIDGE<br>TYPICAL CROSS SECTION<br>OF APPROACH ROAD | SCALE :<br>S=1:50 | DRAWING No:<br>D-11 |

# CROSS SECTIONS OF ROAD (1)

(DANDAYA BRIDGE)

NO.9+00.000
FH=20.850
GH=20.809

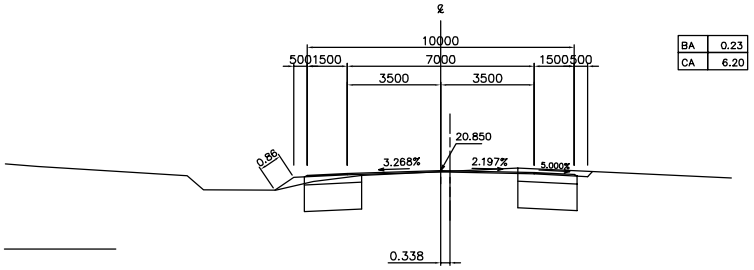


| | |
|---|---|
| BA | 0.23 |
| CA | 6.20 |

DL=15.00

NO.12+00.000
FH=20.733
GH=19.62

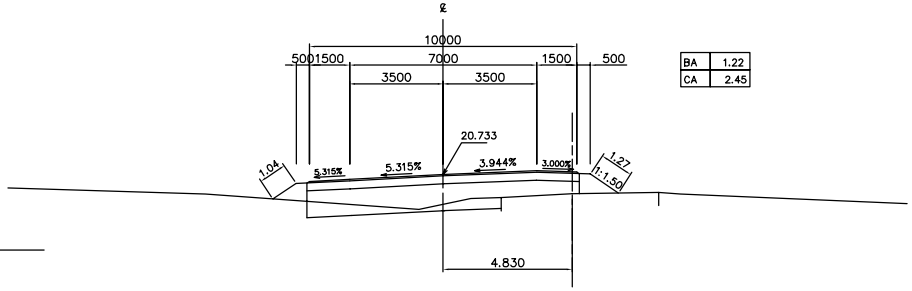


| | |
|---|---|
| BA | 1.22 |
| CA | 2.45 |

DL=15.00

BC 2-0(NO.8+06.157)
FH=21.107
GH=21.107

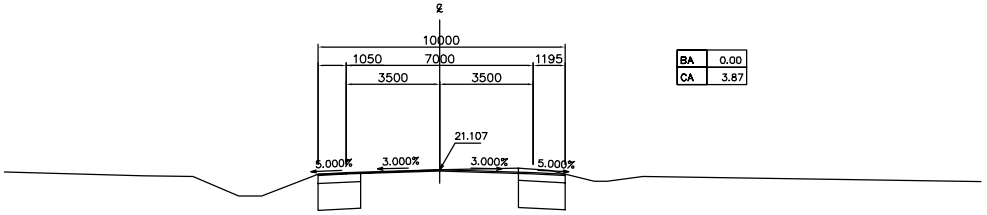


| | |
|---|---|
| BA | 0.00 |
| CA | 3.87 |

DL=15.00

NO.11+00.000
FH=20.604
GH=20.02

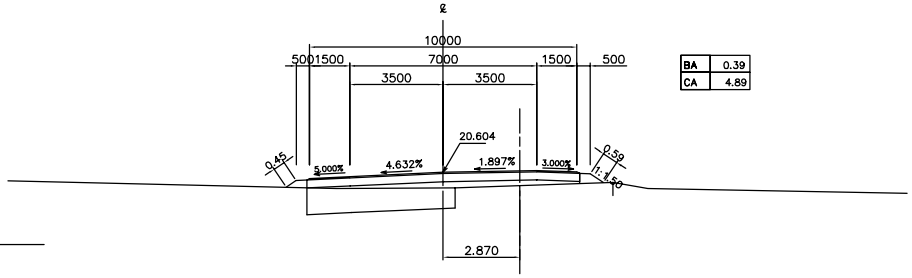


| | |
|---|---|
| BA | 0.39 |
| CA | 4.89 |

DL=15.00

NO.8+00.000
FH=21.232
GH=21.232

BEGINING POINT OF PROJECT

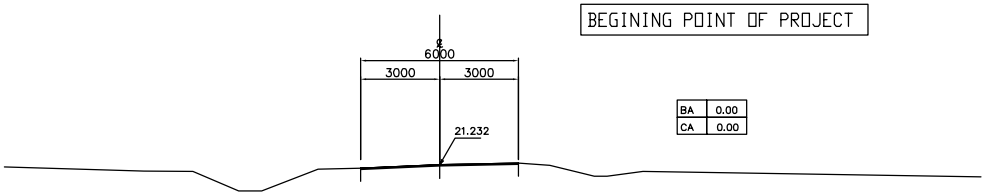


| | |
|---|---|
| BA | 0.00 |
| CA | 0.00 |

DL=15.00

NO.10+00.000
FH=20.632
FH=20.34

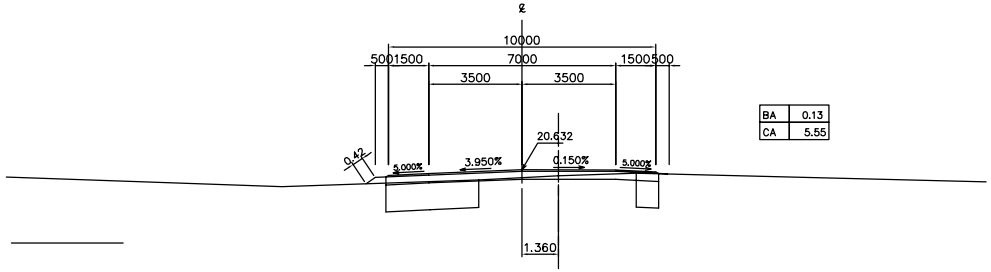


| | |
|---|---|
| BA | 0.13 |
| CA | 5.55 |

DL=15.00

| | | | | | |
|---|---|---|---|---|---|
| ROAD INVESTMENT DEPARTMENT<br>MINISTRY OF PUBLIC WORKS, URBANIZATION AND HABITAT | BASIC DESIGN ON THE PROJECT FOR<br>REHABILITATION OF BRIDGES ON ARTERIAL<br>NATIONAL ROADS IN THE REPUBLIC OF GUINEA | JAPAN INTERNATIONAL COOPERATION AGENCY<br>KATAHIRA & ENGINEERS INTERNATIONAL | TITLE : DANDAYA BRIDGE<br>CROSS SECTIONS OF ROAD (1)<br>(NO.8+0.00 - NO.12+0.00) | SCALE :<br>S=1:100 | DRAWING No:<br>D-12 |

# CROSS SECTIONS OF ROAD (2)

(DANDAYA BRIDGE)

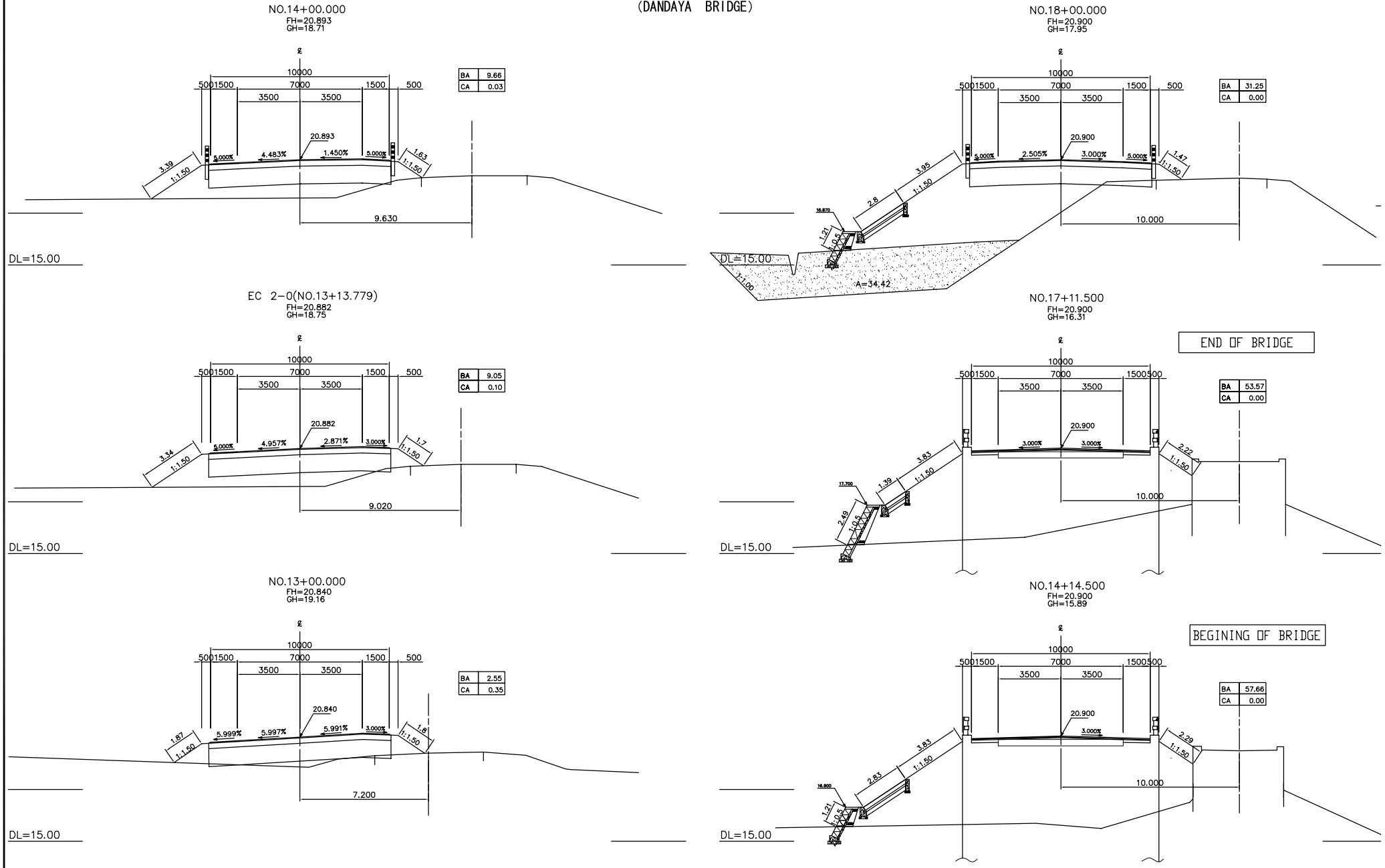


| | | | | | |
|---|---|---|---|---|---|
| ROAD INVESTMENT DEPARTMENT<br>MINISTRY OF PUBLIC WORKS, URBANIZATION AND HABITAT | BASIC DESIGN ON THE PROJECT FOR<br>REHABILITATION OF BRIDGES ON ARTERIAL<br>NATIONAL ROADS IN THE REPUBLIC OF GUINEA | JAPAN INTERNATIONAL COOPERATION AGENCY<br>KATAHIRA & ENGINEERS INTERNATIONAL | TITLE : DANDAYA BRIDGE<br>CROSS SECTIONS OF ROAD (2)<br>(NO. 13+0.00 - NO. 18+0.00) | SCALE :<br>S=1:100 | DRAWING No:<br>D-13 |

# CROSS SECTIONS OF ROAD (3)

(DANDAYA BRIDGE)

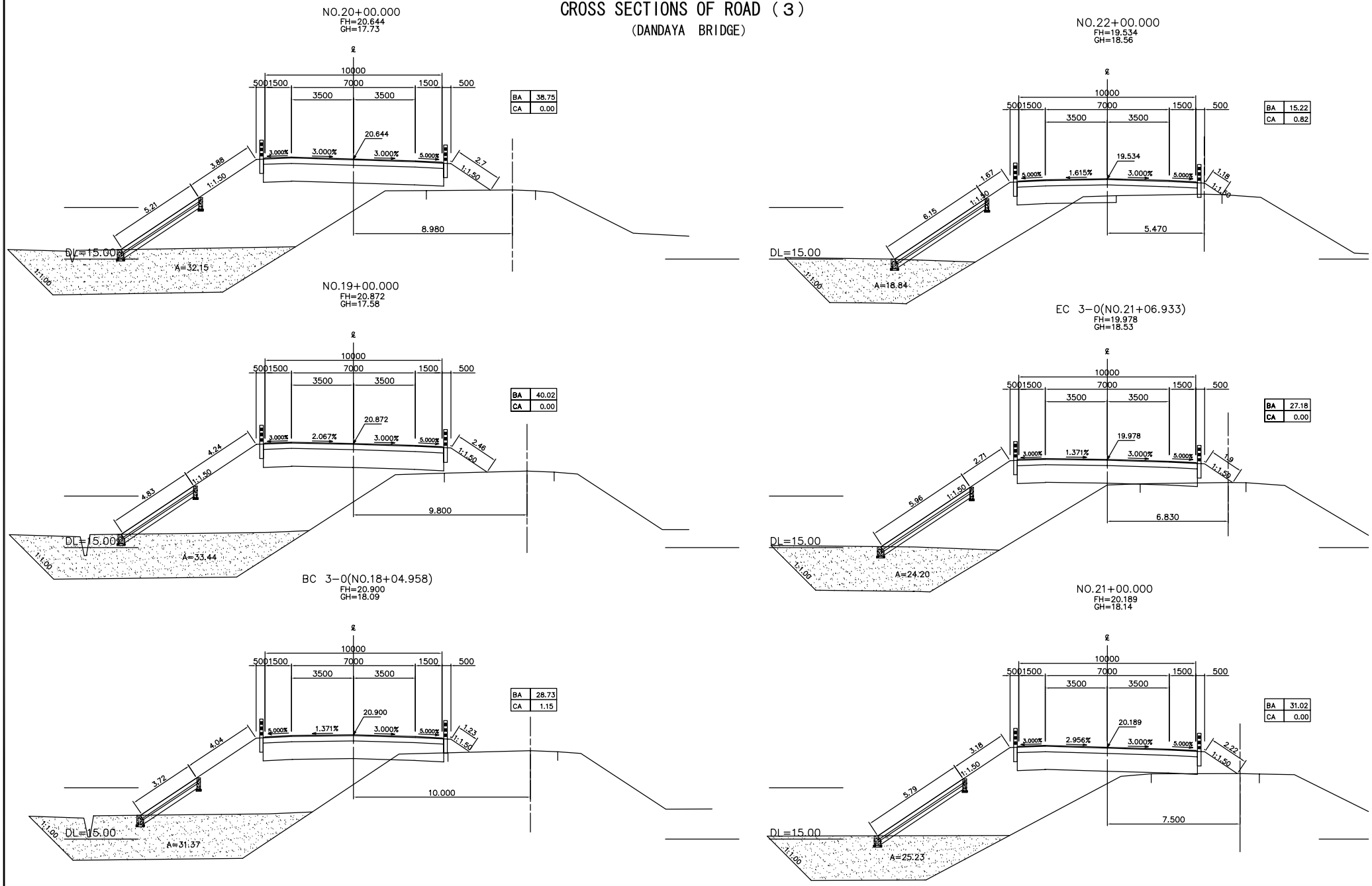


| | | | | | |
|---|---|---|---|---|---|
| ROAD INVESTMENT DEPARTMENT<br>MINISTRY OF PUBLIC WORKS, URBANIZATION AND HABITAT | BASIC DESIGN ON THE PROJECT FOR<br>REHABILITATION OF BRIDGES ON ARTERIAL<br>NATIONAL ROADS IN THE REPUBLIC OF GUINEA | JAPAN INTERNATIONAL COOPERATION AGENCY<br>KATAHIRA & ENGINEERS INTERNATIONAL | TITLE : DANDAYA BRIDGE<br>CROSS SECTIONS OF ROAD (3)<br>(NO. 18+4.958 - NO. 22+0.00) | SCALE :<br>S=1:100 | DRAWING No:<br>D-14 |

# CROSS SECTIONS OF ROAD (4)

(DANDAYA BRIDGE)

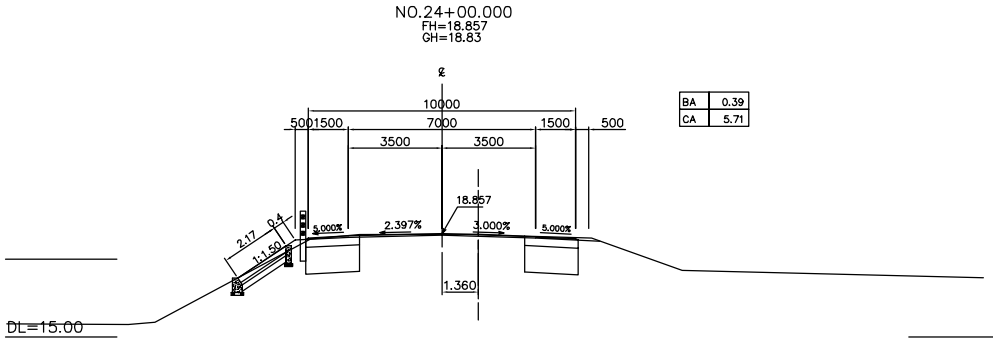


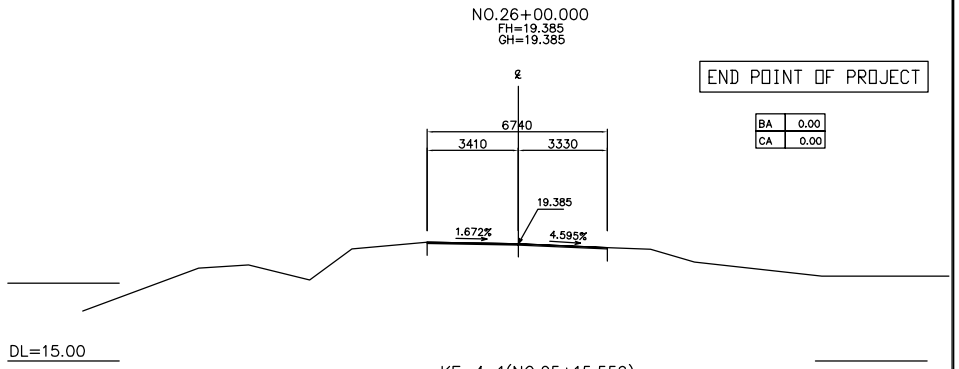


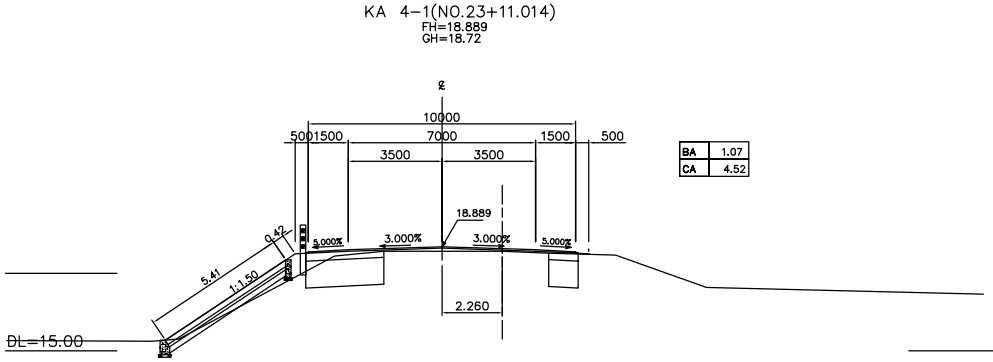


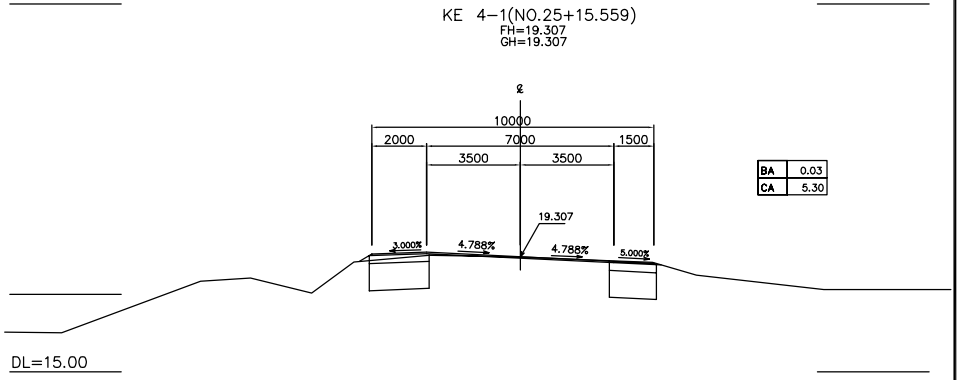


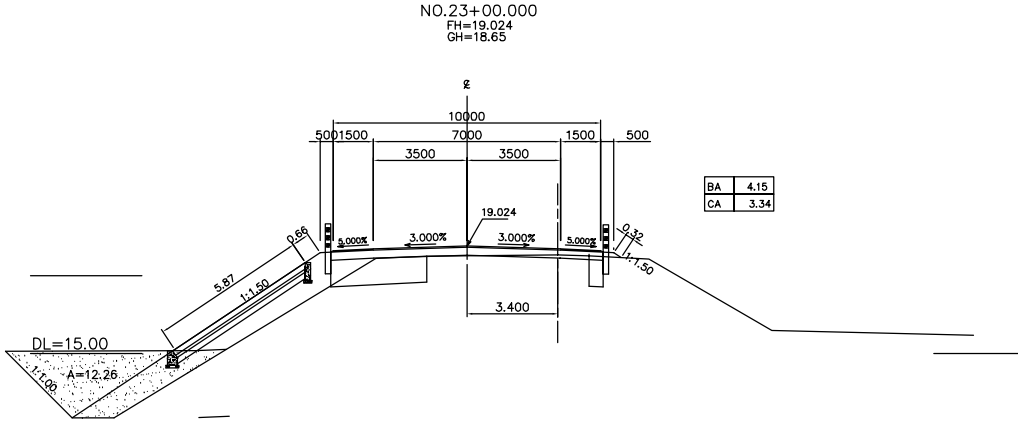


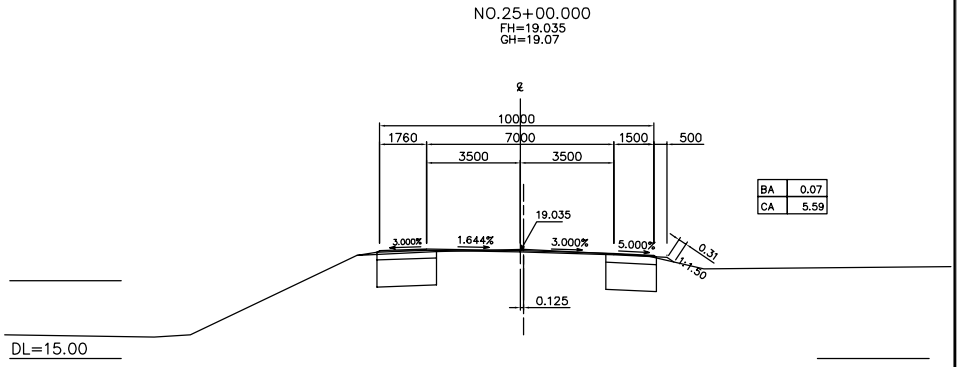


| | | | | | |
|---|---|---|---|---|---|
| ROAD INVESTMENT DEPARTMENT<br>MINISTRY OF PUBLIC WORKS, URBANIZATION AND HABITAT | BASIC DESIGN ON THE PROJECT FOR<br>REHABILITATION OF BRIDGES ON ARTERIAL<br>NATIONAL ROADS IN THE REPUBLIC OF GUINEA | JAPAN INTERNATIONAL COOPERATION AGENCY<br>KATAHIRA & ENGINEERS INTERNATIONAL | TITLE : DANDAYA BRIDGE<br>CROSS SECTIONS OF ROAD (4)<br>(NO.18+4.958 - NO.22+0.00) | SCALE :<br>S=1:100 | DRAWING No:<br>D-15 |

# GUIDE POST AND BANK PROTECTION
(DANDAYA BRIDGE)

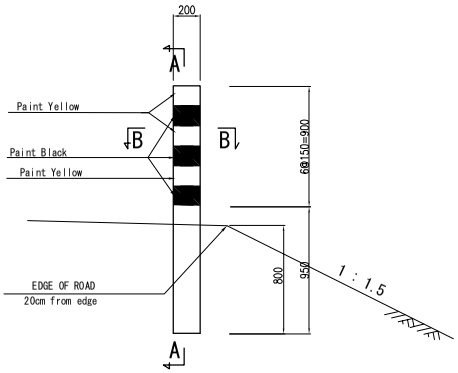


**GUIDE POST** Scale 1:20

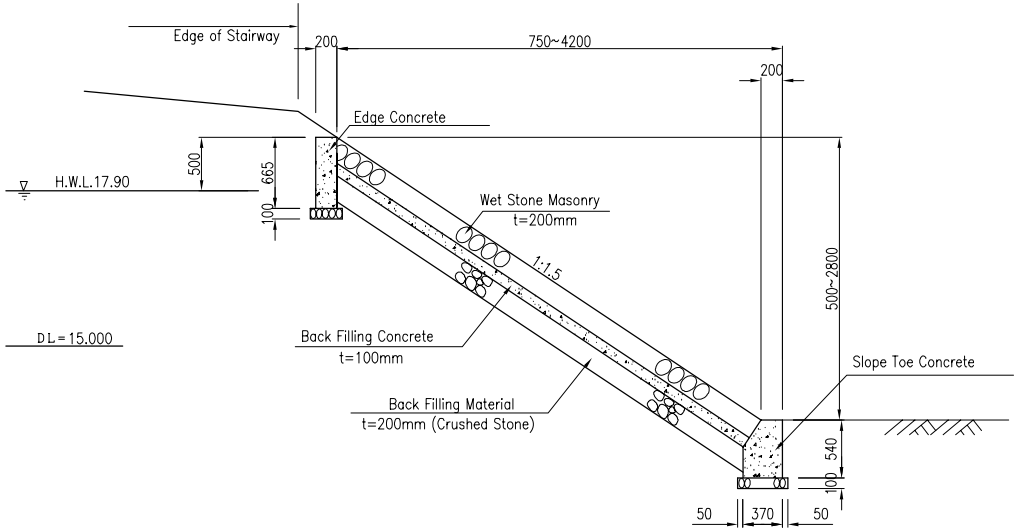


**BANK PROTECTION** Scale 1:25

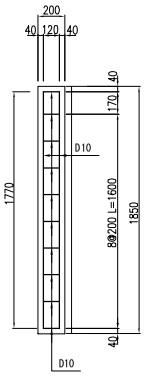


**DETAIL A-A** Scale 1:20

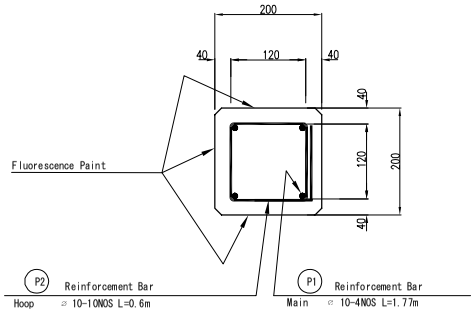


**DETAIL B-B** Scale 1:5

| MARK | DIA-METER | LENGTH mm | NO. | WEIGHT/m kg/m | WEIGHT/ONE kg | WEIGHT | REMARKS |
|---|---|---|---|---|---|---|---|
| $P_1$ | D10 | 1770 | 4 | 0.616 | 1.090 | 4.4 | —— |
| $P_2$ | 〃 | 600 | 10 | 〃 | 0.370 | 3.7 | □ |
| | | | | | | 8.1 kg | |

SCHEDULED LIST OF GUIDE POST

| LEFT SIDE | | | RIGHT SIDE | | |
|---|---|---|---|---|---|
| STATION | LENGTH (m) | Number (Nos.) | STATION | LENGTH (m) | Number (Nos.) |
| 14+0.0 to 24+0.0 | 143.0 | 72 | 14+0.0 to 23+0.0 | 123.0 | 62 |
| TOTAL (Left + Right) =72+62 = 134 Nos. | | | | | |
| NOTE: To be installed at the outer side of the curve at 2 meters interval | | | | | |

| | | | | | |
|---|---|---|---|---|---|
| ROAD INVESTMENT DEPARTMENT<br>MINISTRY OF PUBLIC WORKS, URBANIZATION AND HABITAT | BASIC DESIGN ON THE PROJECT FOR<br>REHABILITATION OF BRIDGES ON ARTERIAL<br>NATIONAL ROADS IN THE REPUBLIC OF GUINEA | JAPAN INTERNATIONAL COOPERATION AGENCY<br>KATAHIRA & ENGINEERS INTERNATIONAL | TITLE : DANDAYA BRIDGE<br>GUIDE POST AND BANK PROTECTION | SCALE :<br>AS SHOWN | DRAWING No:<br>D-16 |

# DETAIL OF BANK PROTECTION

(DANDAYA BRIDGE)

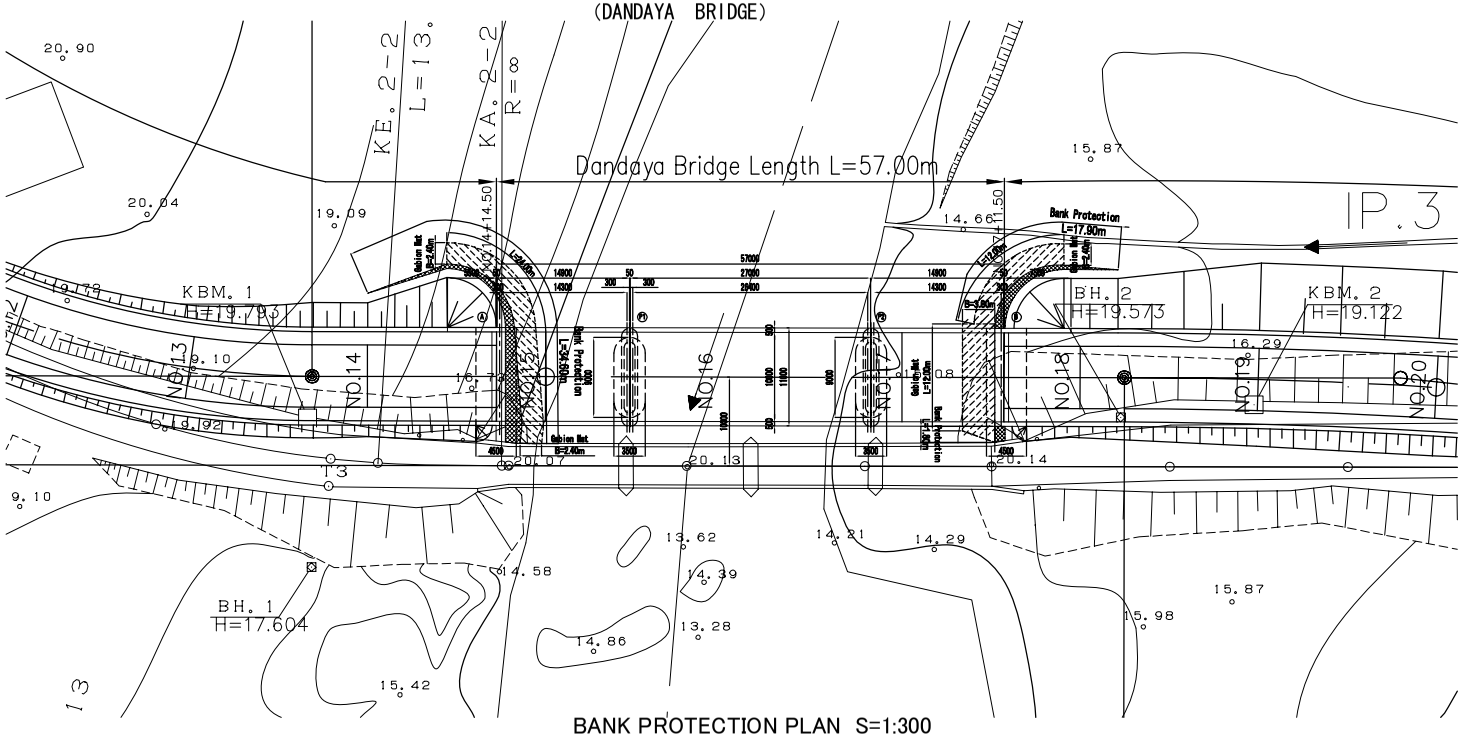


BANK PROTECTION PLAN S=1:300

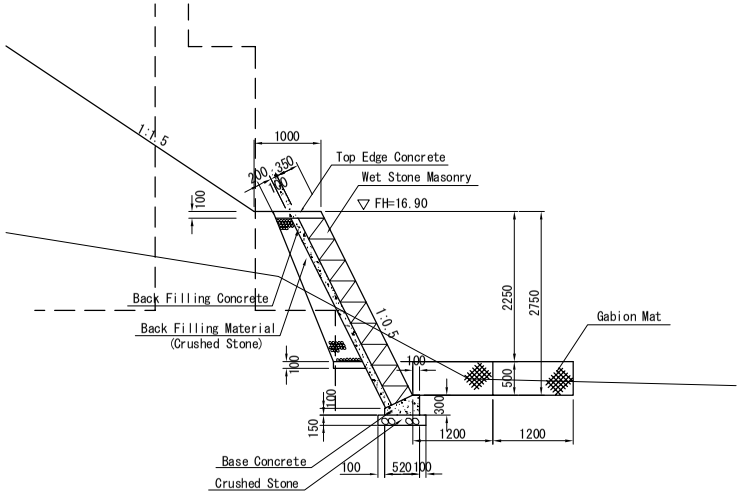


A1 BANK PROTECTION CROSS S=1:40

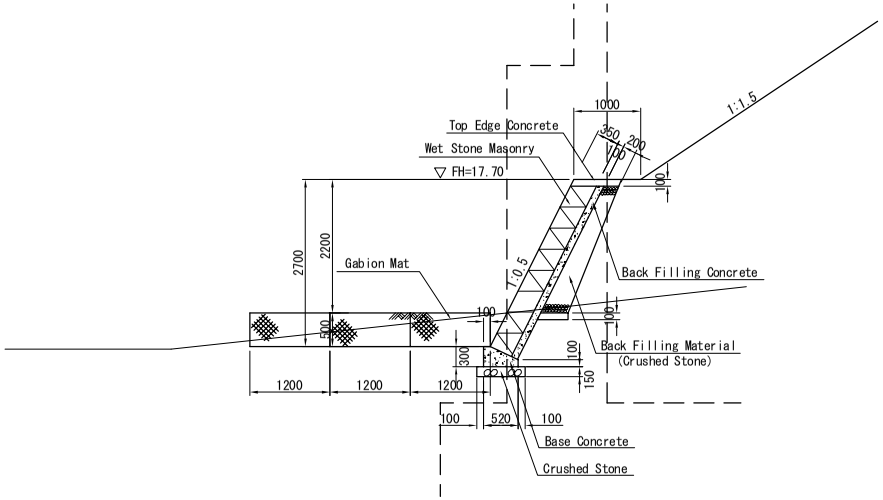


A2 BANK PROTECTION CROSS S=1:40

| | | | | | |
|---|---|---|---|---|---|
| ROAD INVESTMENT DEPARTMENT<br>MINISTRY OF PUBLIC WORKS, URBANIZATION AND HABITAT | BASIC DESIGN ON THE PROJECT FOR<br>REHABILITATION OF BRIDGES ON ARTERIAL<br>NATIONAL ROADS IN THE REPUBLIC OF GUINEA | JAPAN INTERNATIONAL COOPERATION AGENCY<br>KATAHIRA & ENGINEERS INTERNATIONAL | TITLE: DANDAYA BRIDGE<br>DETAIL OF BANK PROTECTION | SCALE:<br>AS SHOWN | DRAWING No:<br>D-17 |

# EXPANSION OF BANK PROTECTION

(DANDAYA BRIDGE)

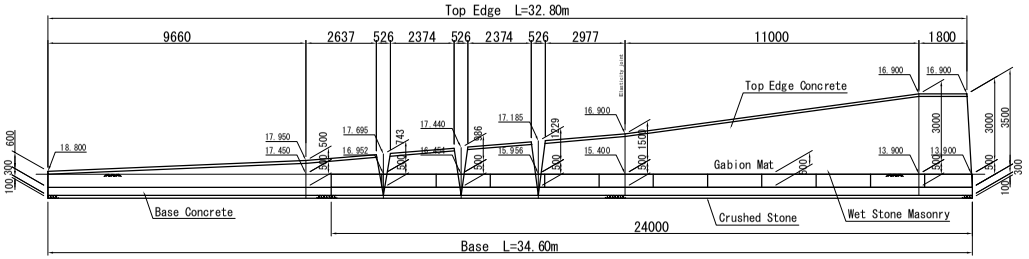


A1 Bank

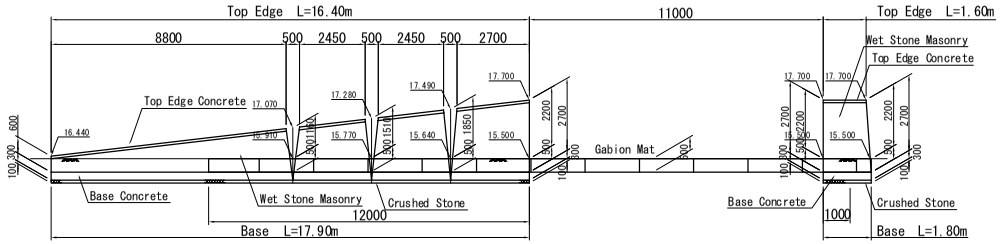


A2 Left Bank

A2 Right Bank

| | | | | | |
|---|---|---|---|---|---|
| ROAD INVESTMENT DEPARTMENT<br>MINISTRY OF PUBLIC WORKS, URBANIZATION AND HABITAT | BASIC DESIGN ON THE PROJECT FOR<br>REHABILITATION OF BRIDGES ON ARTERIAL<br>NATIONAL ROADS IN THE REPUBLIC OF GUINEA | JAPAN INTERNATIONAL COOPERATION AGENCY<br>KATAHIRA & ENGINEERS INTERNATIONAL | TITLE : DANDAYA BRIDGE<br>EXPANSION OF BANK PROTECTION | SCALE :<br>S=1:100 | DRAWING No:<br>D-18 |