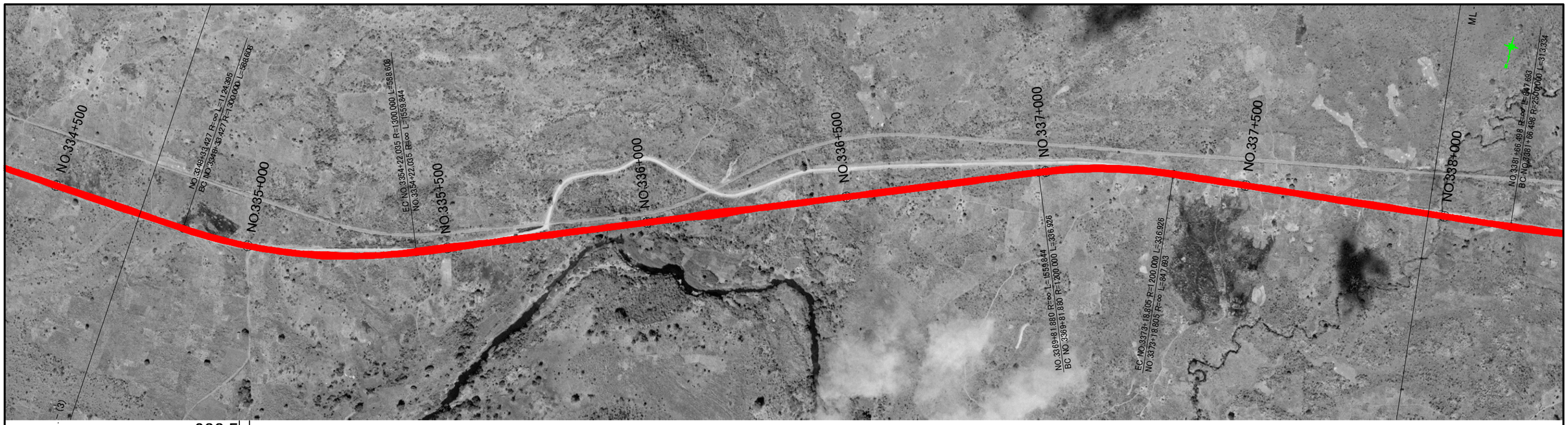

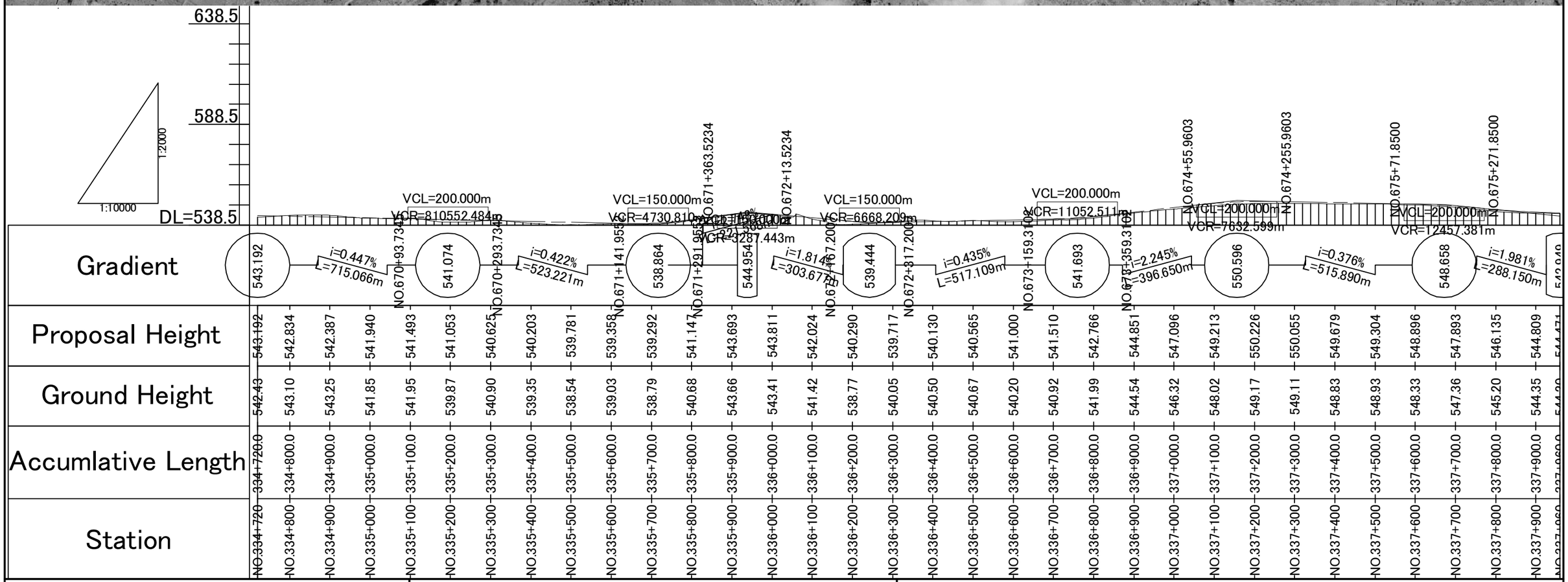

JICA JAPAN INTERNATIONAL COOPERATION AGENCY

ANE NATIONAL ROAD ADMINISTRATION

REMARKS:

THE STUDY ON UPGRADING OF NAMPULA - CUAMBA ROAD

ORINTAL CONSULTANTS CO., LTD.
JEC JAPAN ENGINEERING CONSULTANTS CO., LTD.

	PREPARED BY	CHECKED BY	APPROVED BY
NAME			
SIGNATURE			
DATE			

DRAWING TITLE: Plan and Profile (112/115)

SCALE	SHEET NO.	DRAWING NO.	REV. NO.
1: 10,000		113	-

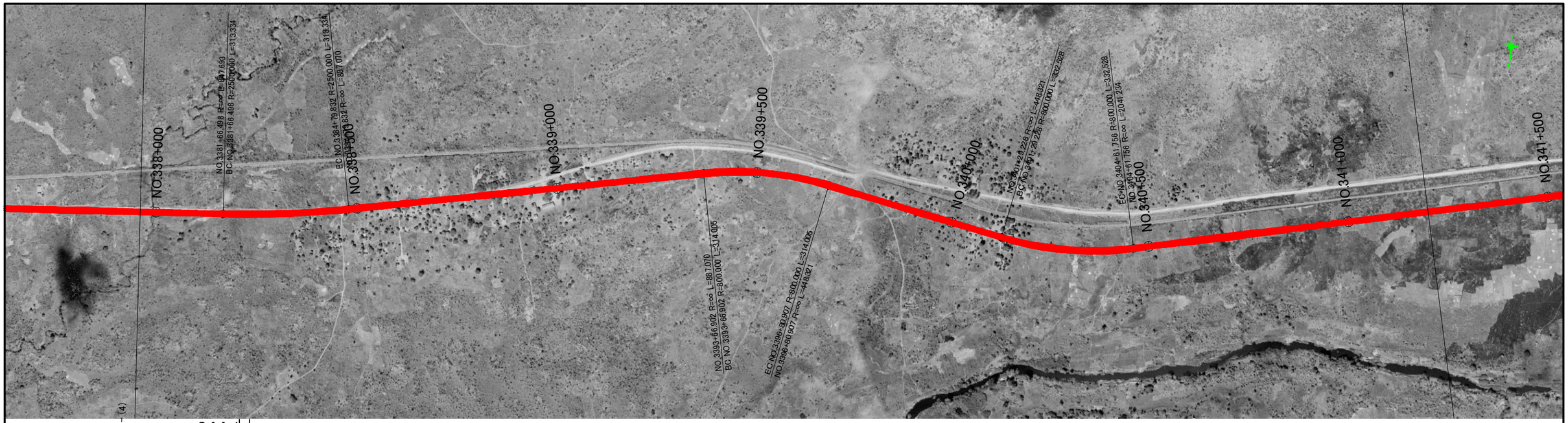

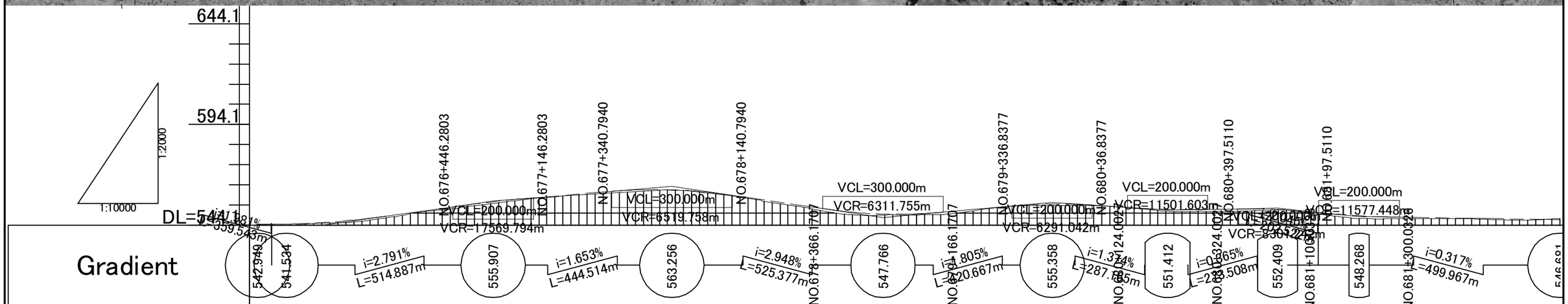

Station	Accumlative Length	Ground Height	Proposal Height
NO.337+960	337+960.0	544.20	544.471
NO.338+000	338+000.0	544.10	544.437
NO.338+100	338+100.0	544.84	545.020
NO.338+200	338+200.0	545.62	546.557
NO.338+300	338+300.0	548.23	549.032
NO.338+400	338+400.0	551.29	551.824
NO.338+500	338+500.0	553.68	554.533
NO.338+600	338+600.0	556.14	556.734
NO.338+700	338+700.0	558.09	558.448
NO.338+800	338+800.0	559.52	560.102
NO.338+900	338+900.0	560.64	561.486
NO.339+000	339+000.0	561.35	561.464
NO.339+100	339+100.0	559.53	559.908
NO.339+200	339+200.0	556.79	557.088
NO.339+300	339+300.0	553.46	554.139
NO.339+400	339+400.0	549.90	551.282
NO.339+500	339+500.0	548.89	549.662
NO.339+600	339+600.0	549.09	549.626
NO.339+700	339+700.0	549.99	551.084
NO.339+800	339+800.0	552.62	552.889
NO.339+900	339+900.0	553.83	554.376
NO.340+000	340+000.0	553.90	554.382
NO.340+100	340+100.0	553.12	553.116
NO.340+200	340+200.0	551.27	551.992
NO.340+300	340+300.0	550.88	551.714
NO.340+400	340+400.0	550.88	552.053
NO.340+500	340+500.0	551.60	551.785
NO.340+600	340+600.0	549.49	550.313
NO.340+700	340+700.0	547.31	548.700
NO.340+800	340+800.0	547.22	547.950
NO.340+900	340+900.0	547.32	547.633
NO.341+000	341+000.0	547.01	547.316
NO.341+100	341+100.0	546.42	546.999
NO.341+200	341+200.0	547.04	546.691

JICA JAPAN INTERNATIONAL COOPERATION AGENCY

NATIONAL ROAD ADMINISTRATION

REMARKS:

THE STUDY ON UPGRADING OF NAMPULA - CUAMBA ROAD

ORINTAL CONSULTANTS CO., LTD.
JAPAN ENGINEERING CONSULTANTS CO., LTD.

	PREPARED BY	CHECKED BY	APPROVED BY
NAME			
SIGNATURE			
DATE			

DRAWING TITLE

Plan and Profile (113/115)

SCALE	SHEET NO.	DRAWING NO.	REV. NO.
1: 10,000		114	-

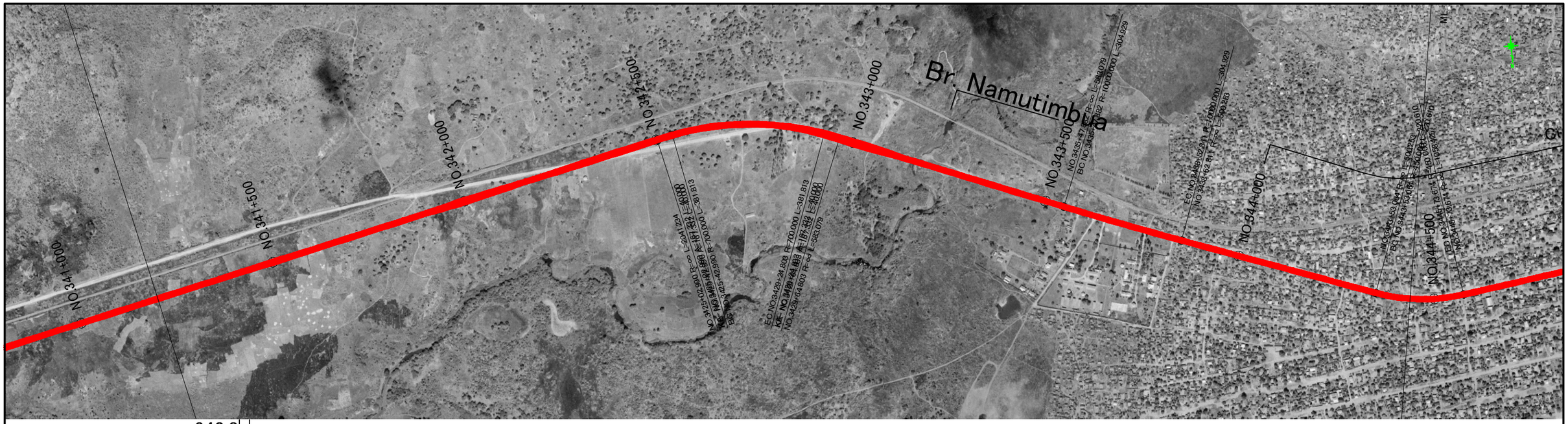

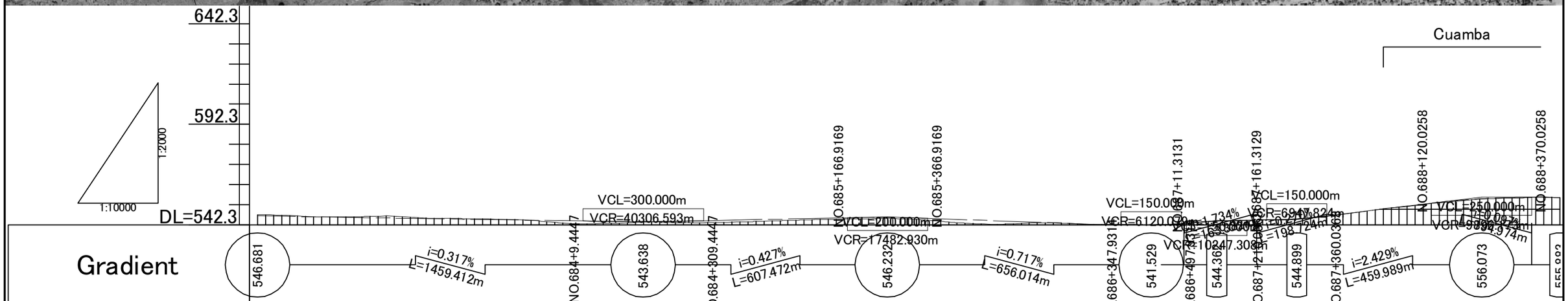

Station	Proposal Height	Ground Height	Accumlative Length
NO.341+200	546.681	547.24	341+200.0
NO.341+300	546.364	546.62	341+300.0
NO.341+400	546.047	546.14	341+400.0
NO.341+500	545.730	546.58	341+500.0
NO.341+600	545.412	545.82	341+600.0
NO.341+700	545.095	545.40	341+700.0
NO.341+800	544.778	545.08	341+800.0
NO.341+900	544.461	544.21	341+900.0
NO.342+000	544.143	542.74	342+000.0
NO.342+100	543.928	543.11	342+100.0
NO.342+200	543.959	543.64	342+200.0
NO.342+300	544.239	543.32	342+300.0
NO.342+400	544.665	543.69	342+400.0
NO.342+500	545.092	544.32	342+500.0
NO.342+600	545.519	544.95	342+600.0
NO.342+700	545.915	545.26	342+700.0
NO.342+800	545.866	545.33	342+800.0
NO.342+900	545.278	543.95	342+900.0
NO.343+000	544.561	542.70	343+000.0
NO.343+100	543.844	542.88	343+100.0
NO.343+200	543.127	543.12	343+200.0
NO.343+300	542.410	542.55	343+300.0
NO.343+400	541.914	542.33	343+400.0
NO.343+500	542.865	542.97	343+500.0
NO.343+600	544.215	544.34	343+600.0
NO.343+700	544.669	544.81	343+700.0
NO.343+800	545.522	545.16	343+800.0
NO.343+900	547.691	547.59	343+900.0
NO.344+000	550.120	550.20	344+000.0
NO.344+100	552.550	552.30	344+100.0
NO.344+200	554.656	554.36	344+200.0
NO.344+300	555.771	555.42	344+300.0
NO.344+400	555.922	556.16	344+400.0

JICA JAPAN INTERNATIONAL COOPERATION AGENCY

NATIONAL ROAD ADMINISTRATION

REMARKS:

THE STUDY ON UPGRADING OF NAMPULA - CUAMBA ROAD

ORINTAL CONSULTANTS CO., LTD.
JAPAN ENGINEERING CONSULTANTS CO., LTD.

	PREPARED BY	CHECKED BY	APPROVED BY
NAME			
SIGNATURE			
DATE			

DRAWING TITLE: Plan and Profile (114/115)

SCALE	SHEET NO.	DRAWING NO.	REV. NO.
1: 10,000		115	-

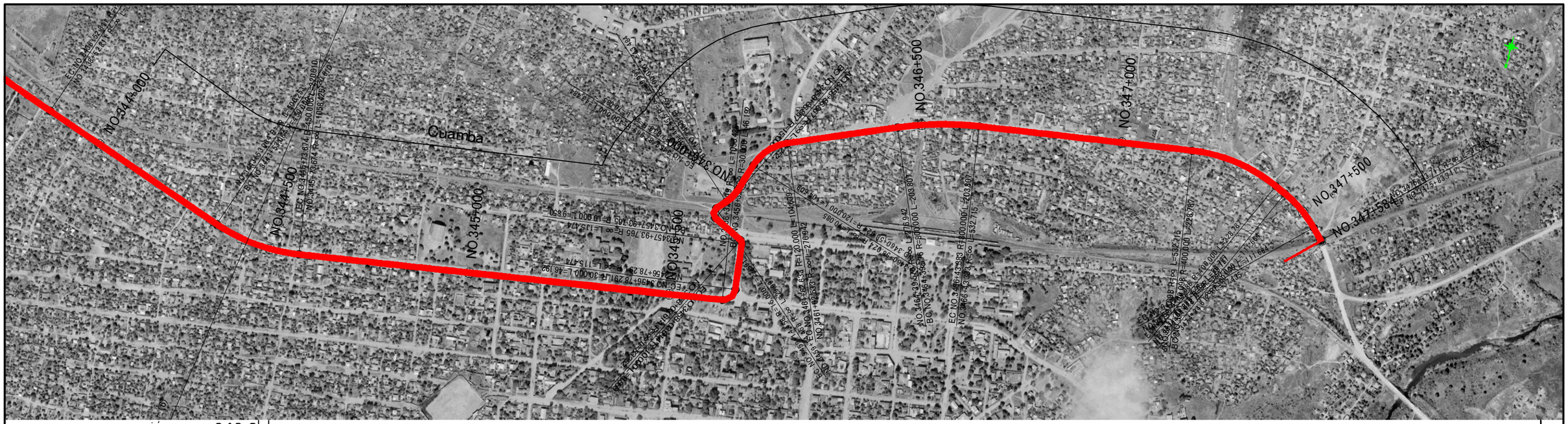

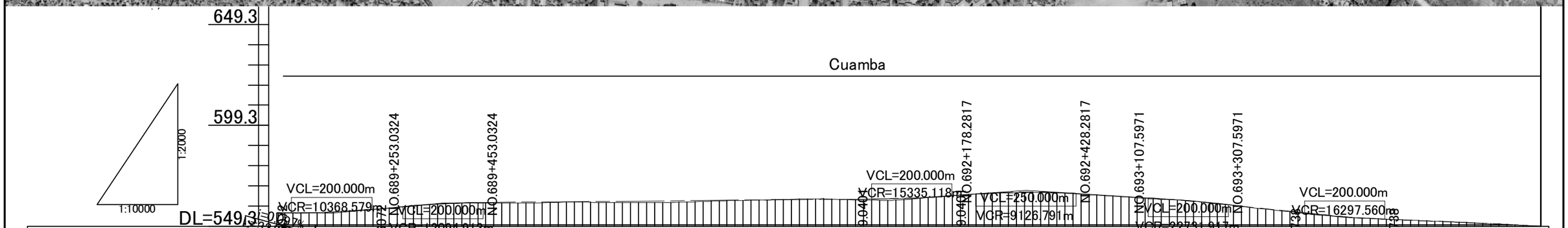

Station	Proposal Height	Ground Height	Accumlative Length
NO.344+440	555.883	555.76	344+440.0
NO.344+500	555.851	555.79	344+500.0
NO.344+600	556.462	556.62	344+600.0
NO.344+700	558.011	557.92	344+700.0
NO.344+800	559.752	559.54	344+800.0
NO.344+900	560.782	560.59	344+900.0
NO.345+000	561.076	560.73	345+000.0
NO.345+100	561.255	560.89	345+100.0
NO.345+200	561.433	561.18	345+200.0
NO.345+300	561.611	560.95	345+300.0
NO.345+400	561.789	561.04	345+400.0
NO.345+500	561.968	561.51	345+500.0
NO.345+600	562.146	562.09	345+600.0
NO.345+700	562.324	562.48	345+700.0
NO.345+800	562.503	562.87	345+800.0
NO.345+900	562.681	562.27	345+900.0
NO.346+000	563.073	562.47	346+000.0
NO.346+100	564.105	563.94	346+100.0
NO.346+200	565.550	565.31	346+200.0
NO.346+300	566.246	565.96	346+300.0
NO.346+400	565.847	565.60	346+400.0
NO.346+500	564.635	564.40	346+500.0
NO.346+600	563.378	563.00	346+600.0
NO.346+700	561.933	561.95	346+700.0
NO.346+800	560.050	559.91	346+800.0
NO.346+900	557.915	557.70	346+900.0
NO.347+000	555.779	555.56	347+000.0
NO.347+100	553.970	553.64	347+100.0
NO.347+200	552.774	552.70	347+200.0
NO.347+300	551.865	551.89	347+300.0
NO.347+400	550.956	551.09	347+400.0
NO.347+500	550.046	550.14	347+500.0
NO.347+584			347+583.7

JICA JAPAN INTERNATIONAL COOPERATION AGENCY

ANE NATIONAL ROAD ADMINISTRATION

REMARKS:

THE STUDY ON UPGRADING OF NAMPULA - CUAMBA ROAD

ORINTAL CONSULTANTS CO., LTD.
JAPAN ENGINEERING CONSULTANTS CO., LTD.

	PREPARED BY	CHECKED BY	APPROVED BY
NAME			
SIGNATURE			
DATE			

DRAWING TITLE: Plan and Profile (115/115)

SCALE	SHEET NO.	DRAWING NO.	REV. NO.
1: 10,000		116	-

N13 Typical Cross Section for Normal Section

CL

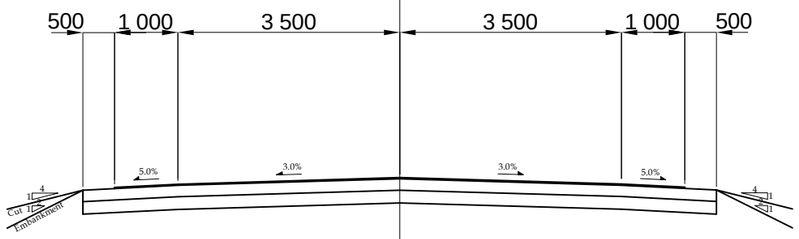

N13 Typical Cross Section for Village Section

CL

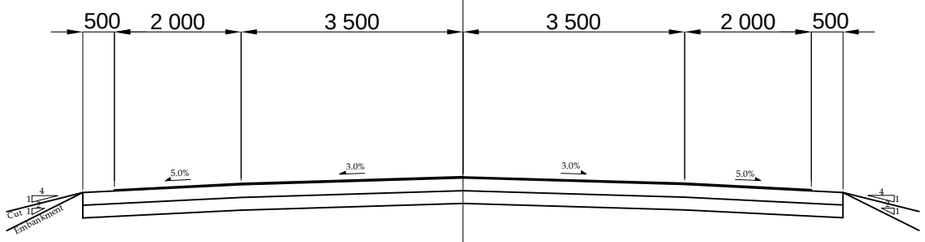

JICA JAPAN INTERNATIONAL COOPERATION AGENCY

NATIONAL ROAD ADMINISTRATION

REMARKS:

THE STUDY ON UPGRADING OF NAMPULA - CUAMBA ROAD

ORINTAL CONSULTANTS CO., LTD.
JAPAN ENGINEERING CONSULTANTS CO., LTD.

	PREPARED BY	CHECKED BY	APPROVED BY
NAME			
SIGNATURE			
DATE			

DRAWING TITLE

Typical Cross Section (1)

SCALE	SHEET NO.	DRAWING NO.	REV. NO.
1: 100		117	-

Typical Cross Section for Ribaue Town

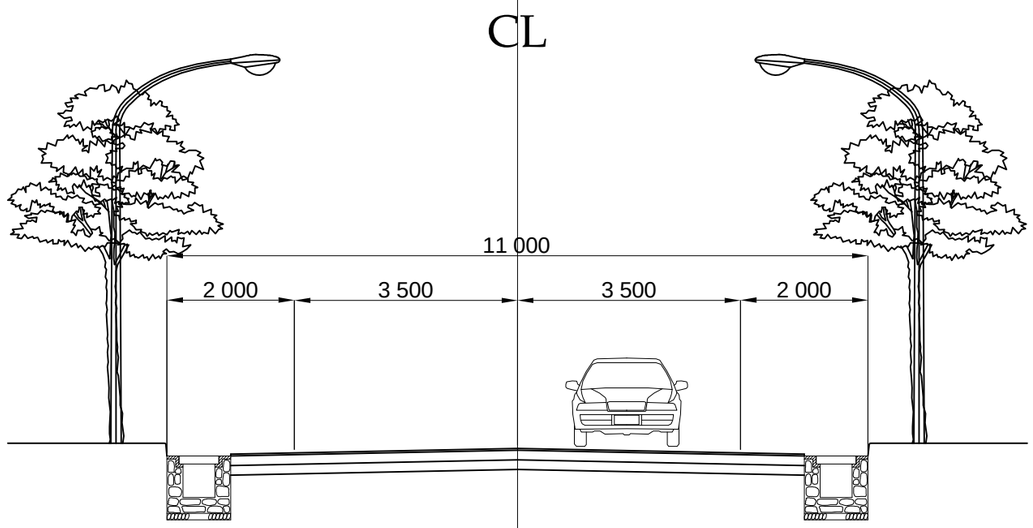

Typical Cross Section for Malema Town

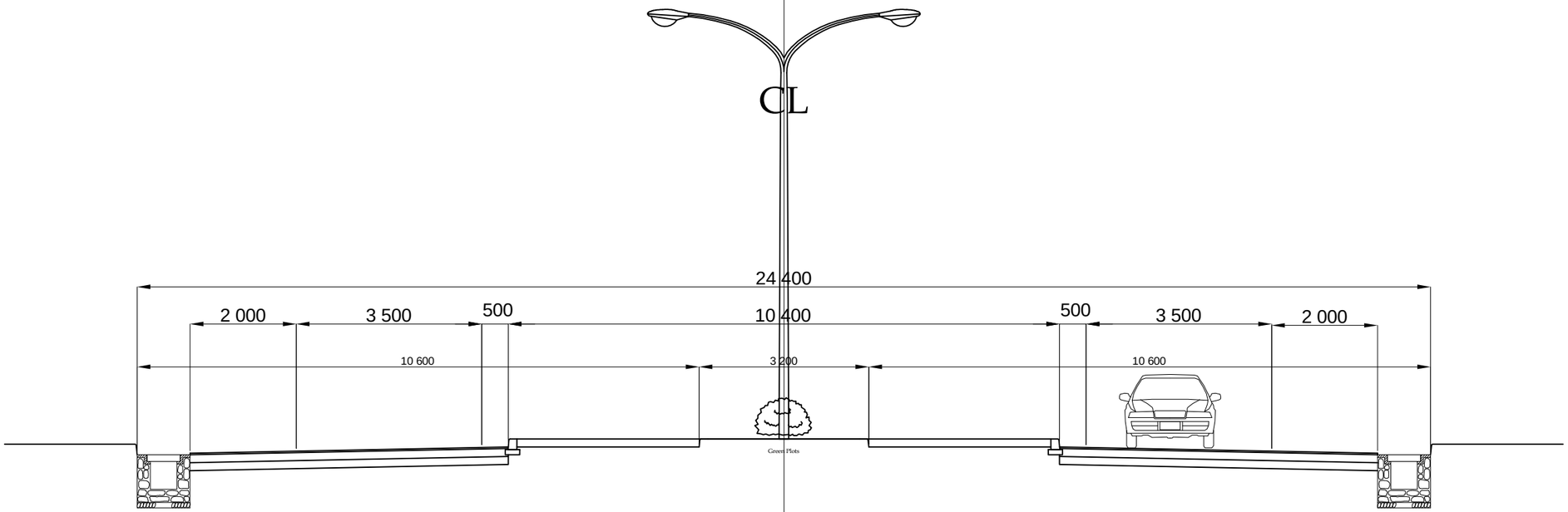

JICA JAPAN INTERNATIONAL COOPERATION AGENCY	REMARKS:	THE STUDY ON UPGRADING OF NAMPULA - CUAMBA ROAD	
NATIONAL ROAD ADMINISTRATION		ORIENTAL CONSULTANTS CO., LTD. JAPAN ENGINEERING CONSULTANTS CO., LTD.	DRAWING TITLE Typical Cross Section (2)

	PREPARED BY	CHECKED BY	APPROVED BY
NAME			
SIGNATURE			
DATE			

SCALE	SHEET NO.	DRAWING NO.	REV. NO.
1: 100		118	-

Typical Cross Section for Cuamba Town

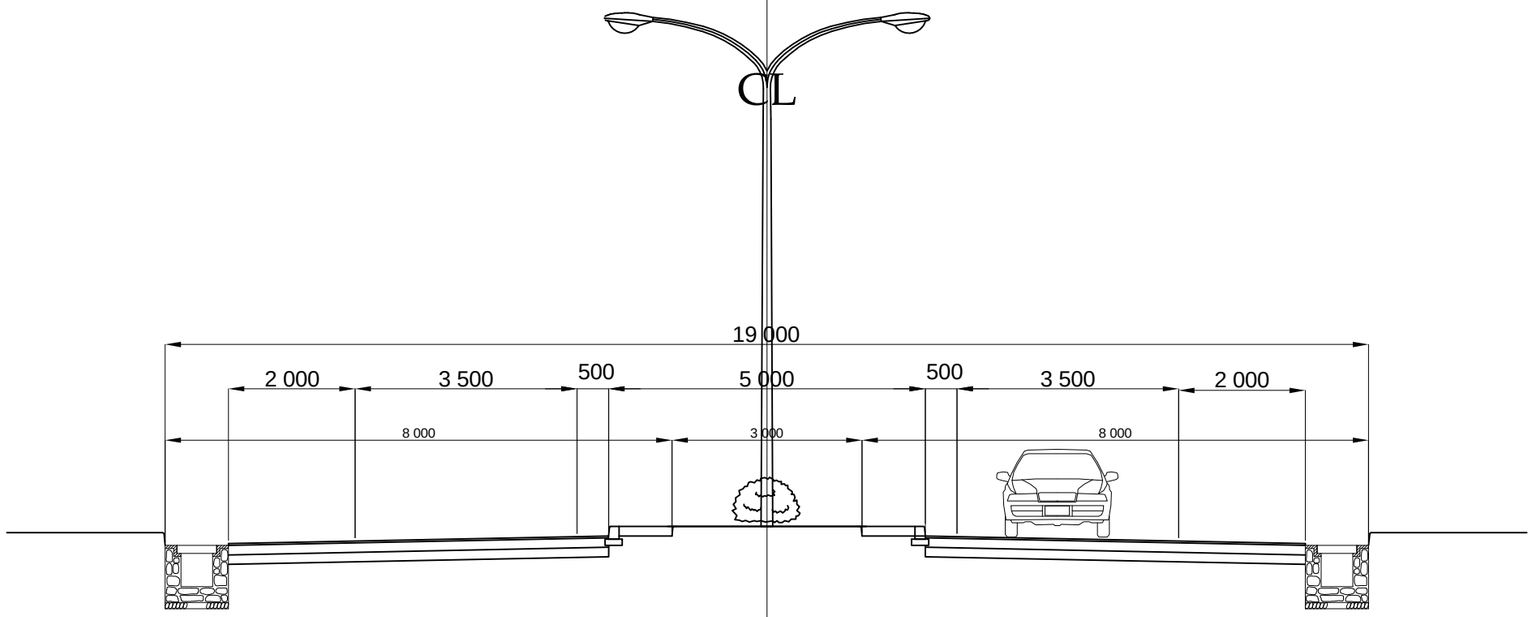

Typical Cross Section for Nampula, Rapale, Namina, Namigonha Town

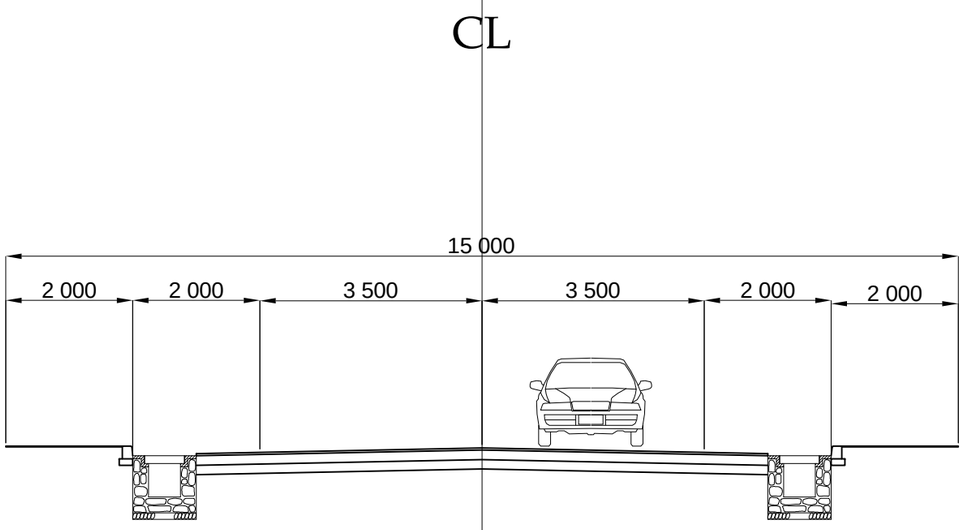

JICA JAPAN INTERNATIONAL COOPERATION AGENCY

NATIONAL ROAD ADMINISTRATION

REMARKS:

THE STUDY ON UPGRADING OF NAMPULA - CUAMBA ROAD

ORIENTAL CONSULTANTS CO., LTD.
JAPAN ENGINEERING CONSULTANTS CO., LTD.

	PREPARED BY	CHECKED BY	APPROVED BY
NAME			
SIGNATURE			
DATE			

DRAWING TITLE: Typical Cross Section (3)

SCALE	SHEET NO.	DRAWING NO.	REV. NO.
1: 100		119	-

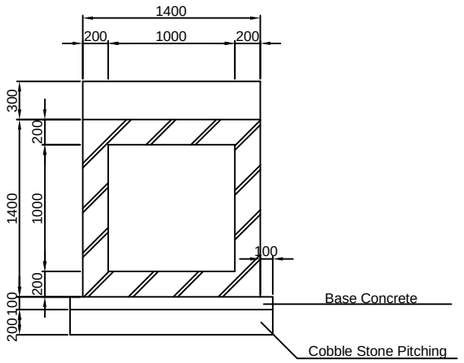

Type 1.0mx1.0m

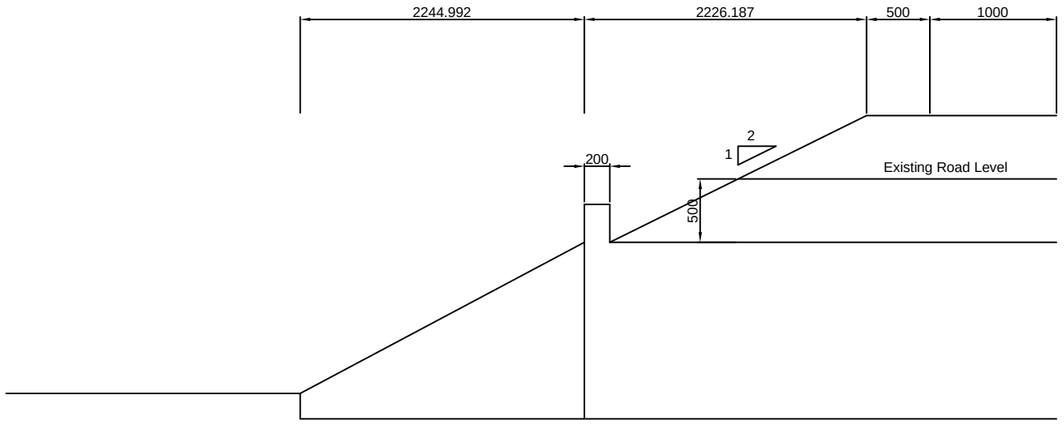

Materials List (Box Culvert 1.0x1.0)

Classification	Standard	Unit	Quantity	Remarks
Cobble Stone Pitching	t=10cm	m^2	30	
Base Concrete	18-8-25	m^3	3	
Concrete	24-8-25	m^3	16	
Reinforcing Bar		t	1.15	
Form		m^2	101	
Excavation of Foundation		m^3	94	
Backfill Soil		m^3	58	

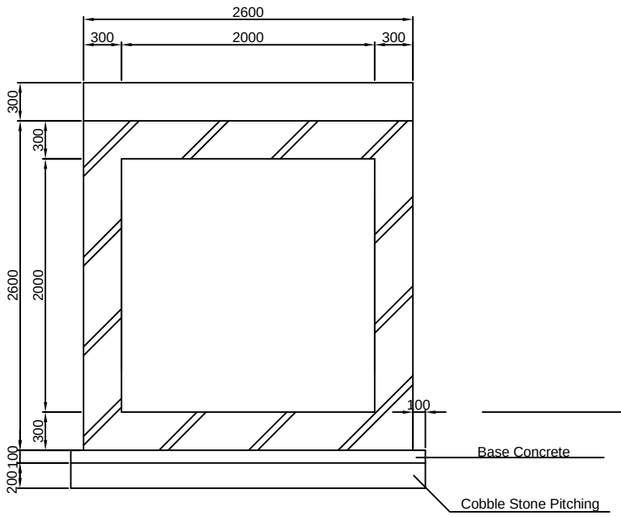

Type 2.0mx2.0m

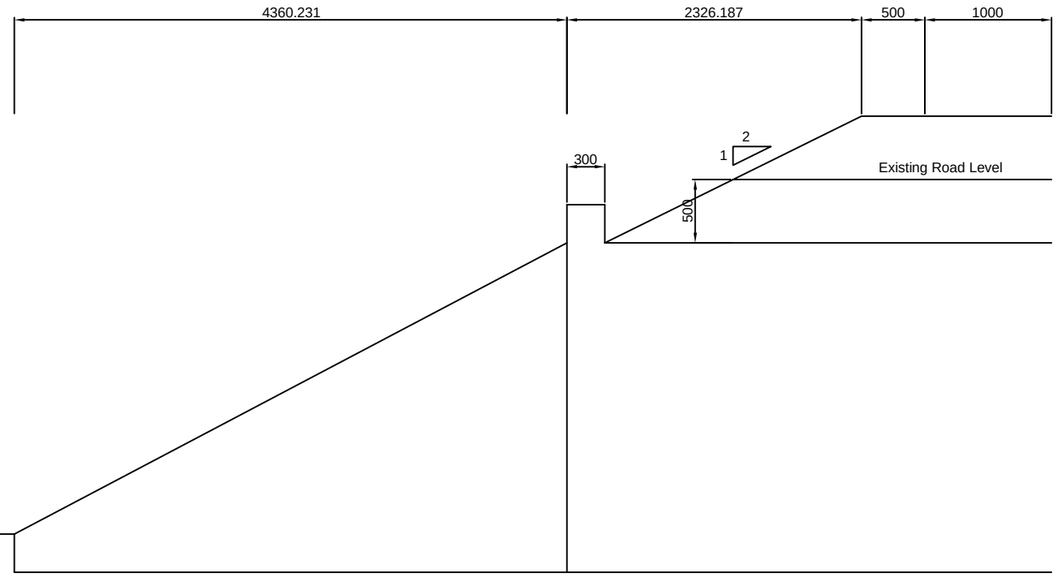

Plan of Box Culvert

Scale = 1:50

Materials List (Box Culvert 2.0x2.0)

Classification	Standard	Unit	Quantity	Remarks
Cobble Stone Pitching	t=10cm	m^2	65	
Base Concrete	18-8-25	m^3	7	
Concrete	24-8-25	m^3	54	
Reinforcing Bar		t	3.76	
Form		m^2	212	
Excavation of Foundation		m^3	459	
Backfill Soil		m^3	347	

JICA JAPAN INTERNATIONAL COOPERATION AGENCY

NATIONAL ROAD ADMINISTRATION

REMARKS:

THE STUDY ON UPGRADING OF NAMPULA - CUAMBA ROAD

ORINTAL CONSULTANTS CO., LTD.
JAPAN ENGINEERING CONSULTANTS CO., LTD.

	PREPARED BY	CHECKED BY	APPROVED BY
NAME			
SIGNATURE			
DATE			

DRAWING TITLE

General Layout of Box Culvert

SCALE	SHEET NO.	DRAWING NO.	REV. NO.
-		120	-

BR.NO.12 MONAPO BRIDGE
GENERAL VIEW OF THE BRIDGE

PROFILE
S=1/100

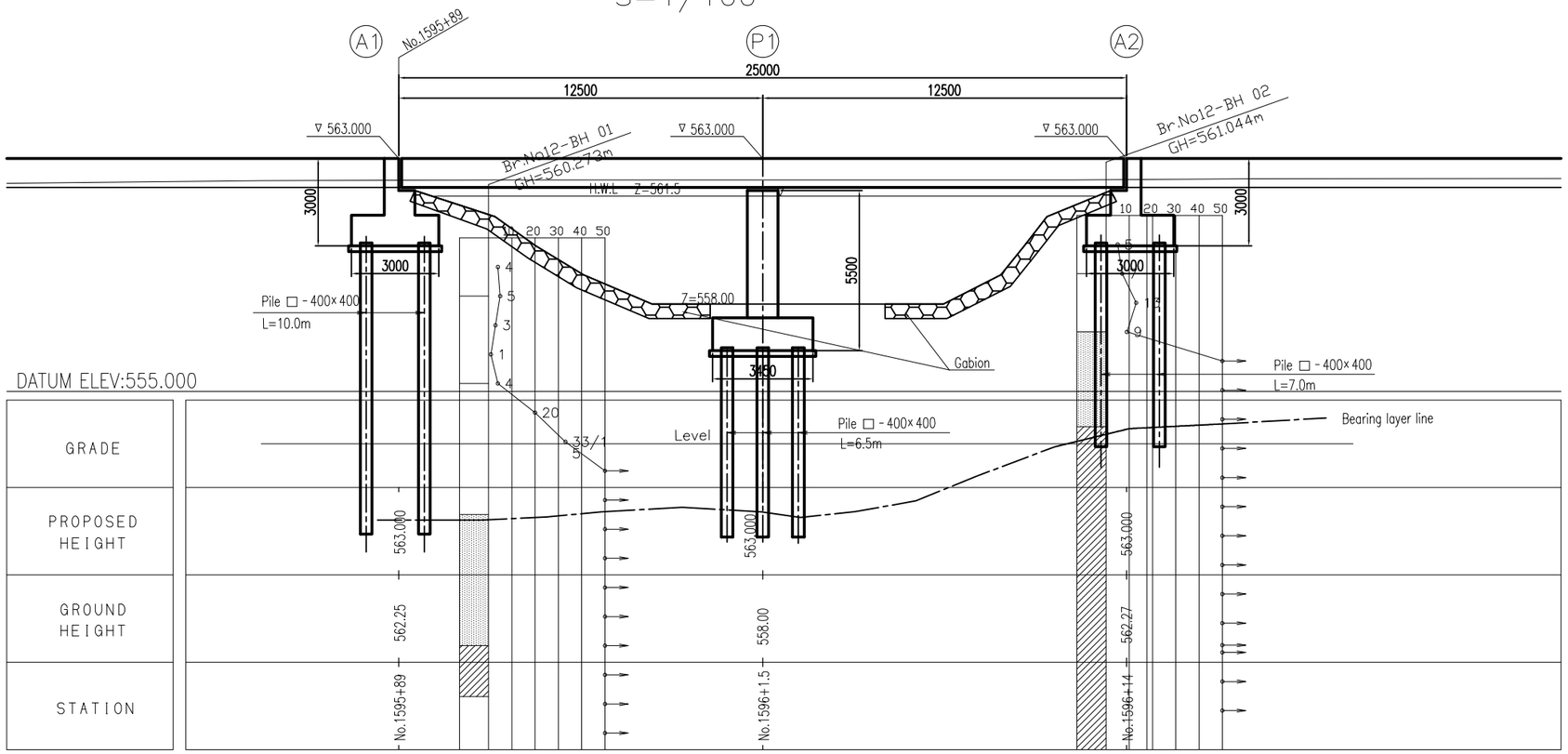

PLAN
S=1/100

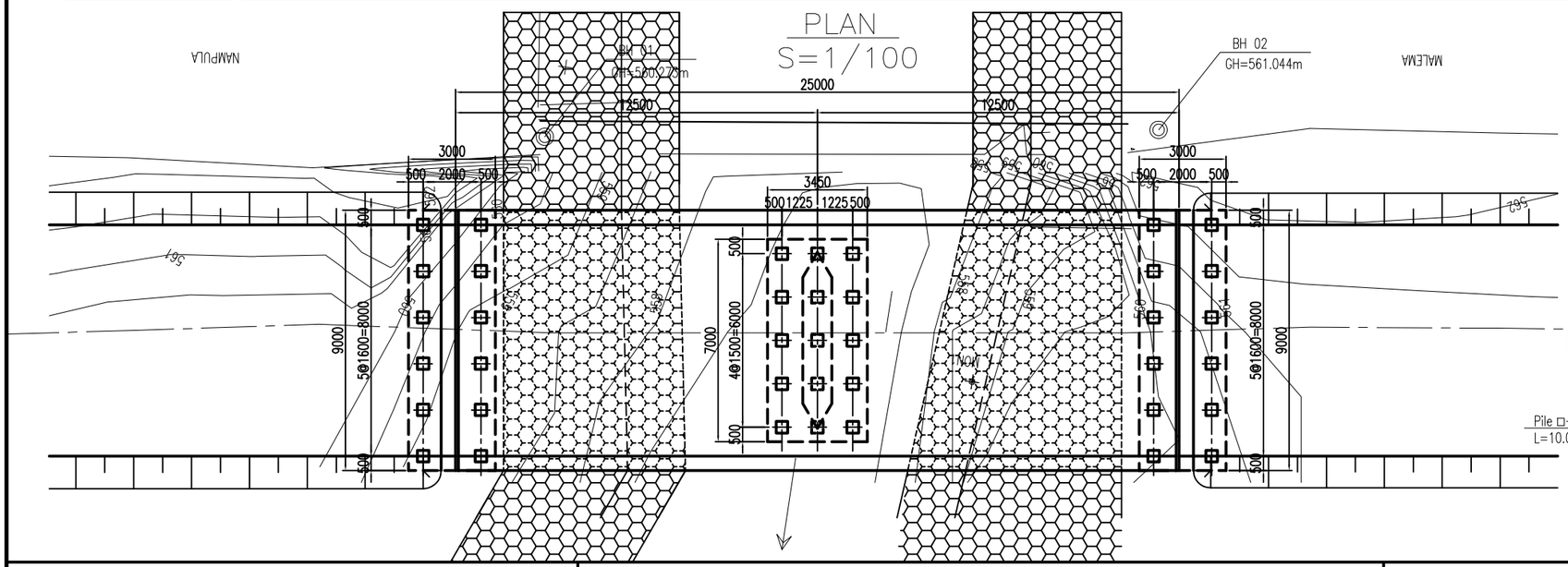

DESIGN CRITERIA

General Condition		
Design Live Load	NA,NB,NC Loading	
Design Speed	V=80km/h	
Bridge Length (Span Length)	25.00m (12.50m+12.50m)	
Freeboard	0.5m	
Longitudinal Gradient	Level	
Cross-fall of Carriage way	2.50%	
Super Structure Type	RC Hollow Slab	
Sub Structure Type	Abutment	RC Reversed-T
	Pier	RC Wall
Foundation Type	Abutment	A1:Pile foundation
		A2:Pile foundation
	Pier	P1:Pile foundation

CROSS SECTION
S=1/50

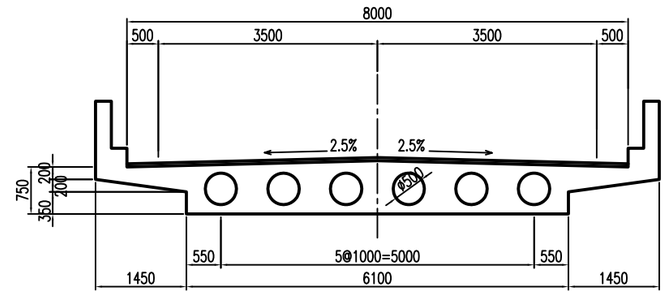

FRONT VIEW
S=1/100

ABUTMENT (A1)

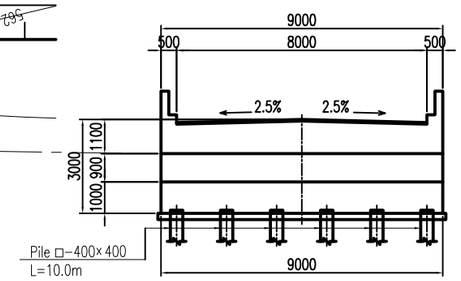

PIER (P1)

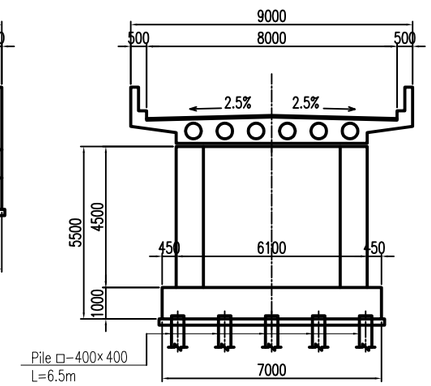

JICA JAPAN INTERNATIONAL COOPERATION AGENCY

NATIONAL ROAD ADMISTRATION

REMARKS:

THE STUDY ON UPGRADING OF NAMPULA - CUAMBA ROAD

ORIENTAL CONSULTANTS CO., LTD.
JAPAN ENGINEERING CONSULTANTS CO., LTD.

	PREPARED BY	CHECKED BY	APPROVED BY
NAME			
SIGNATURE			
DATE			

DRAWING TITLE

BRIDGE STRUCTURE
(BR.No12 MONAPO BRIDGE)

SCALE	SHEET NO.	DRAWING NO.	REV. NO.
		121	-

BR.NO.19 LALAUA BRIDGE
GENERAL VIEW OF THE BRIDGE

PROFILE
S=1/100

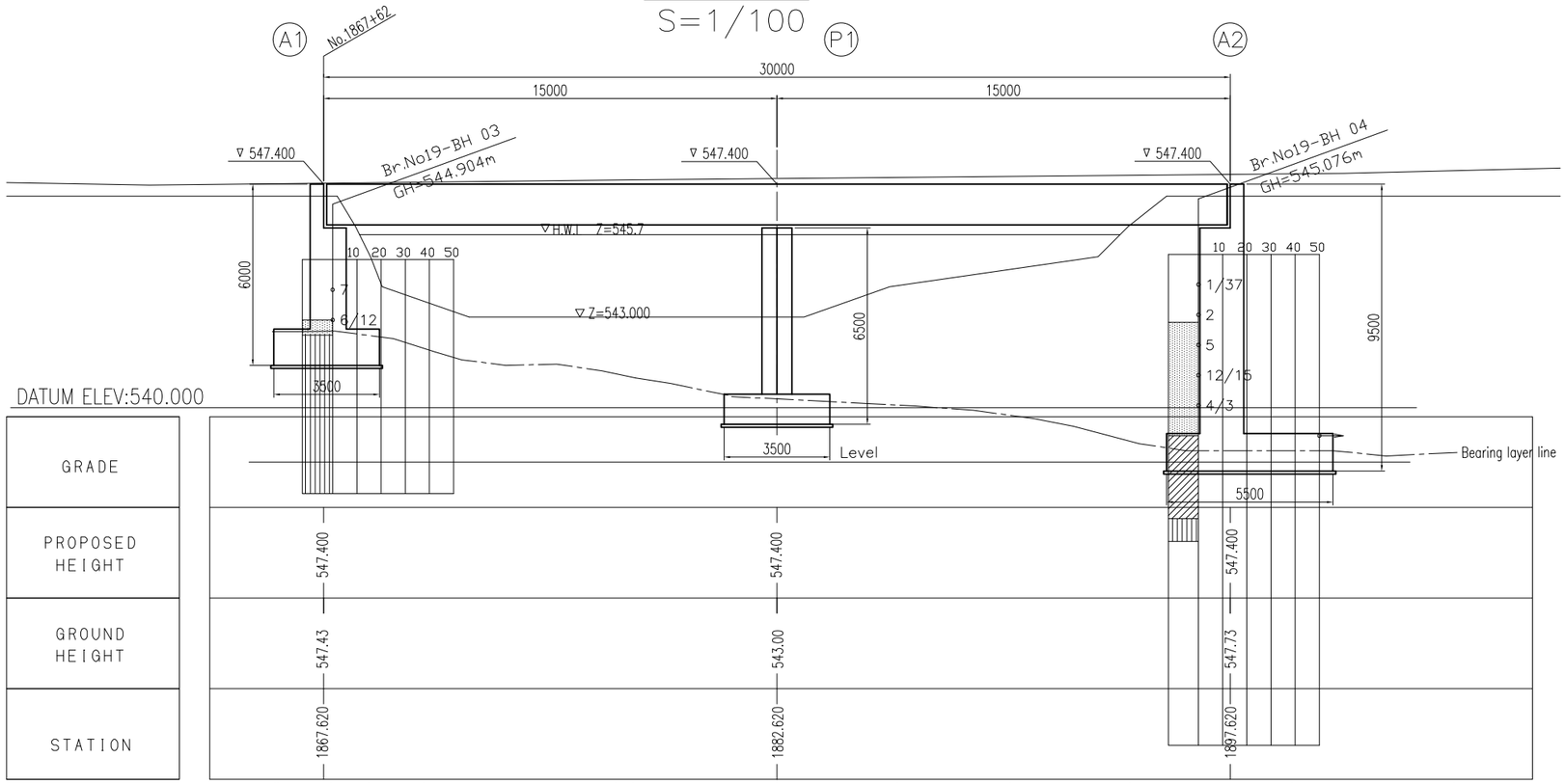

DESIGN CRITERIA

General Condition		
Design Live Load	NA,NB,NC Loading	
Design Speed	V=80km/h	
Bridge Length (Span Length)	30.00m (15.00m+15.00m)	
Freeboard	0.5m	
Longitudinal Gradient	Level	
Cross-fall of Carriage way	2.50%	
Super Structure Type	RC Hollow Slab	
Sub Structure Type	Abutment	RC Reversed-T
	Pier	RC Wall
Foundation Type	Abutment	A1:Spread foundation
		A2:Spread foundation
	Pier	P1:Spread foundation

CROSS SECTION
S=1/50

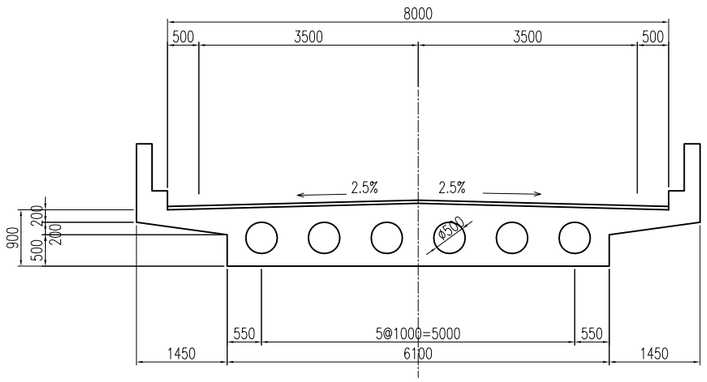

FRONT VIEW
S=1/100

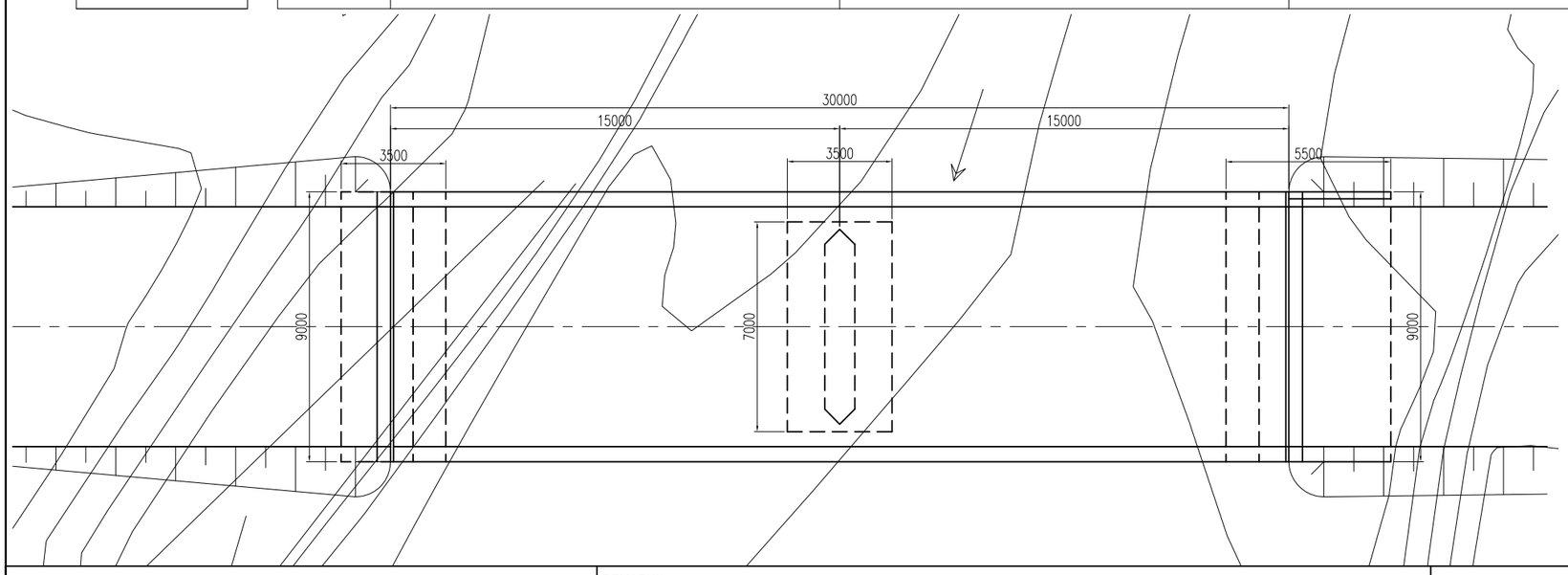

ABUTMENT (A1)

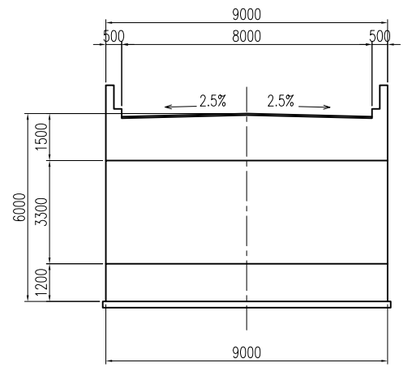

PIER (P1)

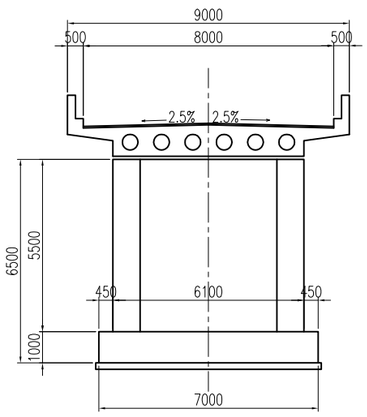

JICA JAPAN INTERNATIONAL COOPERATION AGENCY

NATIONAL ROAD ADMINISTRATION

REMARKS:

THE STUDY ON UPGRADING OF NAMPULA - CUAMBA ROAD

ORIENTAL CONSULTANTS CO., LTD.
JAPAN ENGINEERING CONSULTANTS CO., LTD.

	PREPARED BY	CHECKED BY	APPROVED BY
NAME			
SIGNATURE			
DATE			

DRAWING TITLE

BRIDGE STRUCTURE
(BR.No19 LALAUA BRIDGE)

SCALE	SHEET NO.	DRAWING NO.	REV. NO.
			-

BR.NO.24 NATALEIA BRIDGE
GENERAL VIEW OF THE BRIDGE

PROFILE
S=1/100

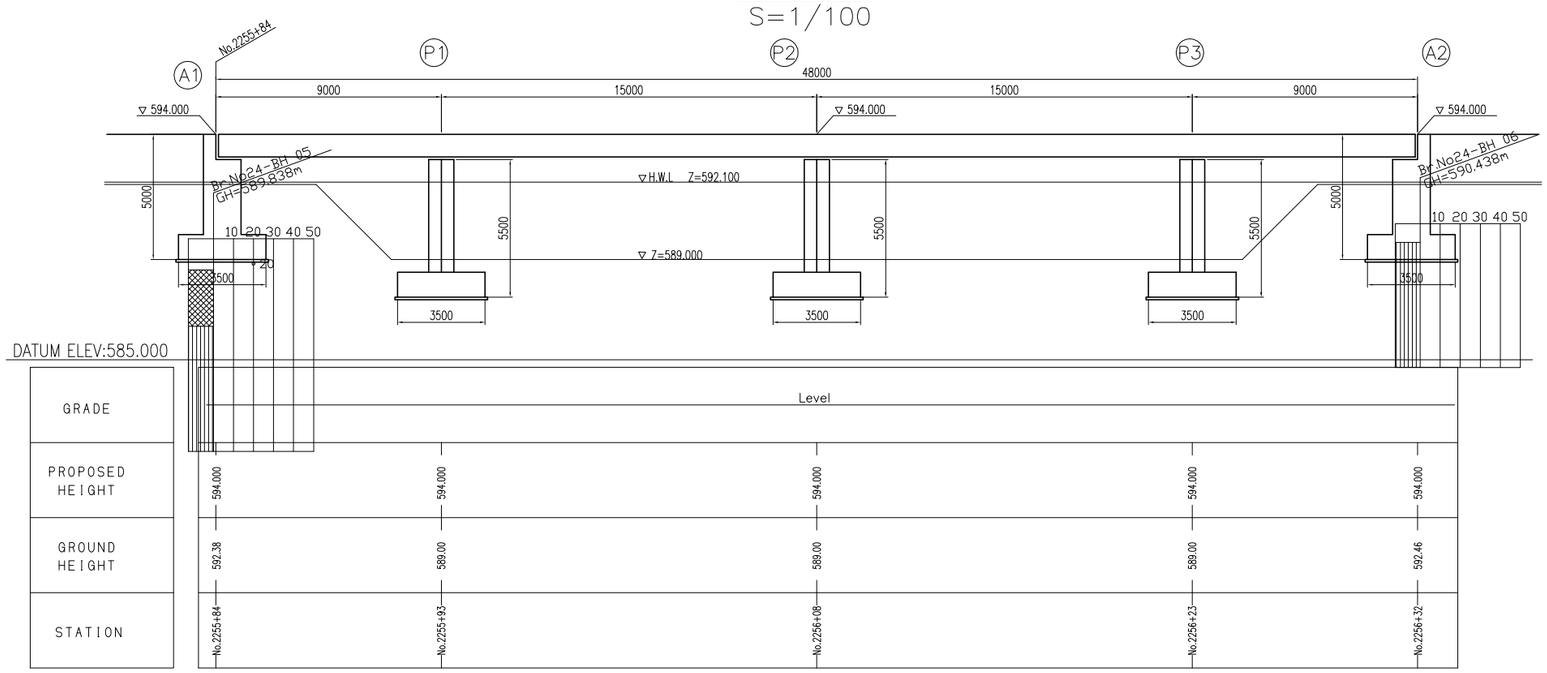

PLAN
S=1/100

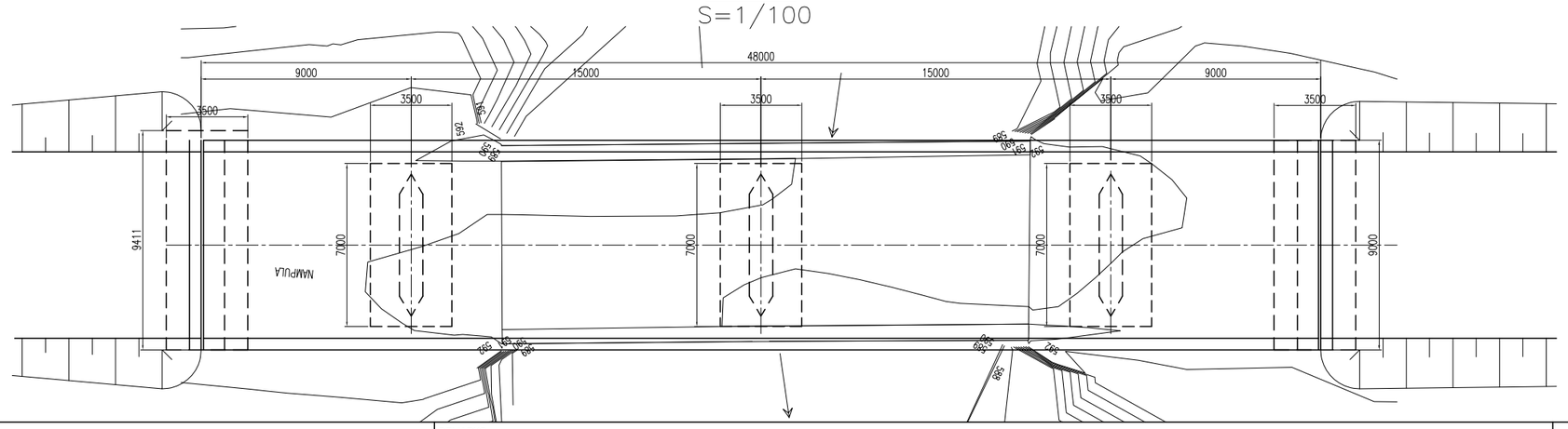

DESIGN CRITERIA

General Condition		
Design Live Load	NA,NB,NC Loading	
Design Speed	V=80km/h	
Bridge Length (Span Length)	48.00m (9.00m+15.00m+15.00m+9.00m)	
Freeboard	0.7m	
Longitudinal Gradient	Level	
Cross-fall of Carriage way	2.50%	
Super Structure Type	RC Hollow Slab	
Sub Structure Type	Abutment	RC Revered-T
	Pier	RC Wall
Foundation Type	Abutment	A1:Spread foundation
		A2:Spread foundation
	Pier	P1:Spread foundation
		P2:Spread foundation
		P3:Spread foundation

CROSS SECTION
S=1/50

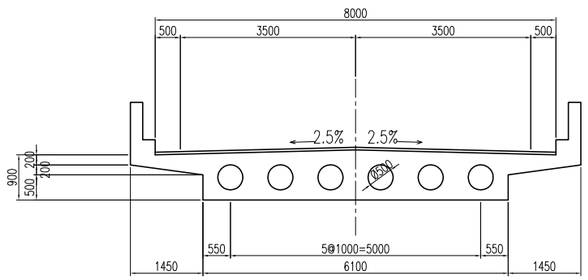

FRONT VIEW
S=1/100

ABUTMENT (A1)

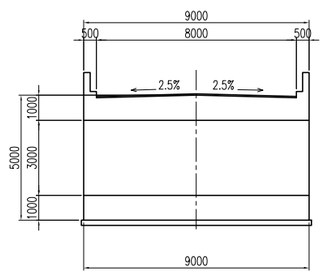

PIER (P1)

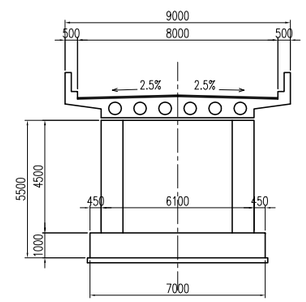

JICA JAPAN INTERNATIONAL COOPERATION AGENCY

NATIONAL ROAD ADMINISTRATION

REMARKS:

THE STUDY ON UPGRADING OF NAMPULA - CUAMBA ROAD

ORIENTAL CONSULTANTS CO., LTD.
JAPAN ENGINEERING CONSULTANTS CO., LTD.

	PREPARED BY	CHECKED BY	APPROVED BY
NAME			
SIGNATURE			
DATE			

DRAWING TITLE

BRIDGE STRUCTURE
(BR.No24 NATALEIA BRIDGE)

SCALE	SHEET NO.	DRAWING NO.	REV. NO.
			-

BR.NO.27 MUTIVASSE BRIDGE
GENERAL VIEW OF THE BRIDGE

PROFILE
S=1/100

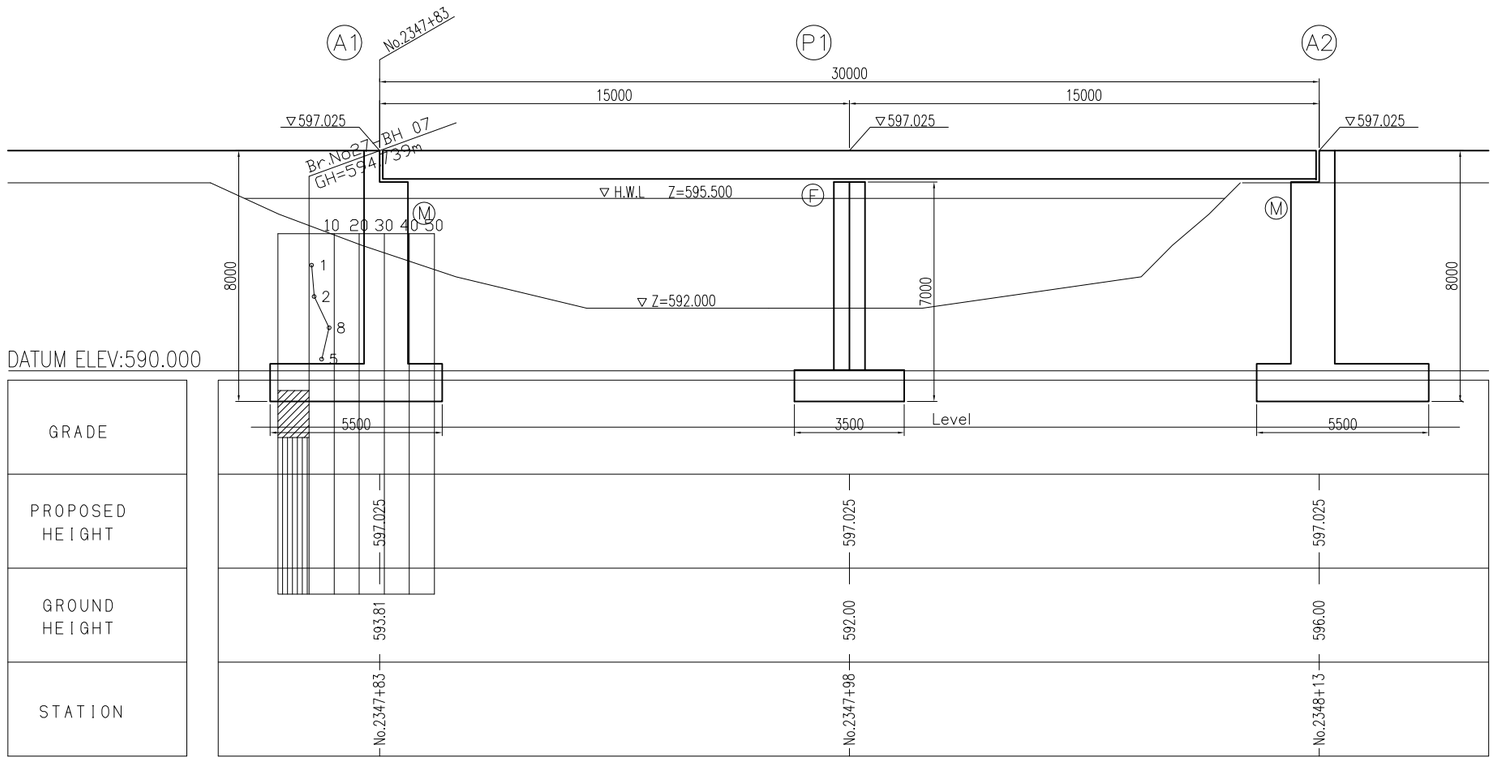

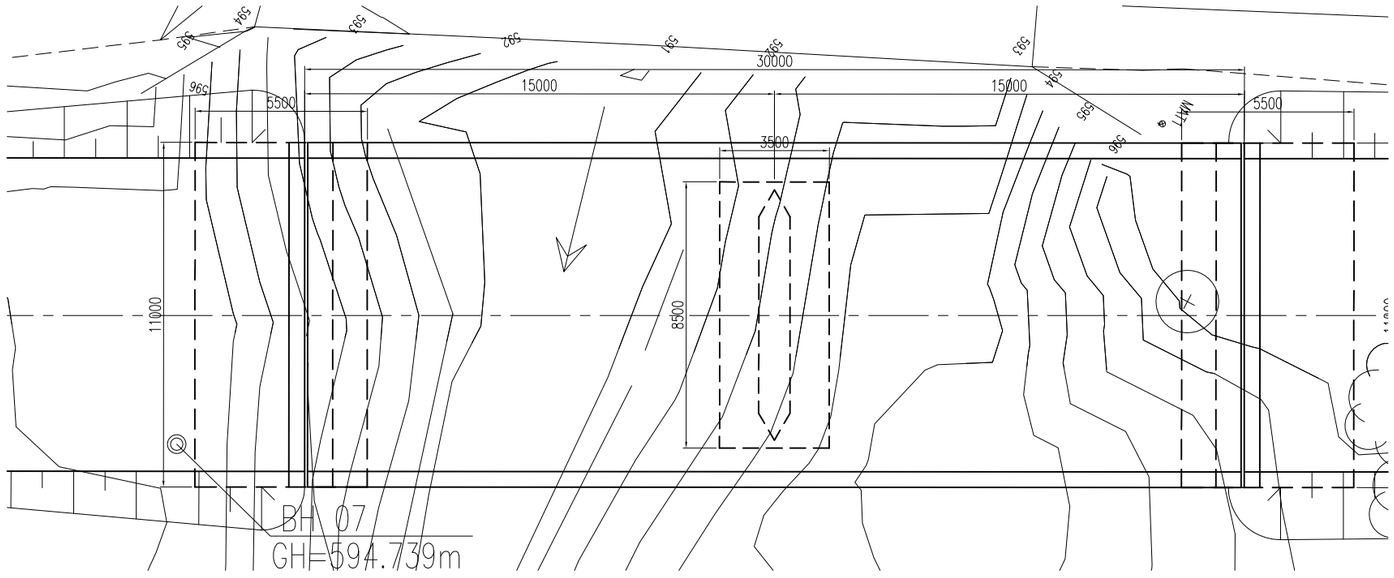

DESIGN CRITERIA

General Condition		
Design Live Load	NA,NB,NC Loading	
Design Speed	V=80km/h	
Bridge Length (Span Length)	30.00m(15.00m+15.00m)	
Freeboard	0.5m	
Longitudinal Gradient	Level	
Cross-fall of Carriage way	2.50%	
Super Structure Type	RC Hollow Slab	
Sub Structure Type	Abutment	RC Revered-T
	Pier	RC Wall
Foundation Type	Abutment	A1:Spread foundation
		A2:Spread foundation
	Pier	P1:Spread foundation

CROSS SECTION
S=1/50

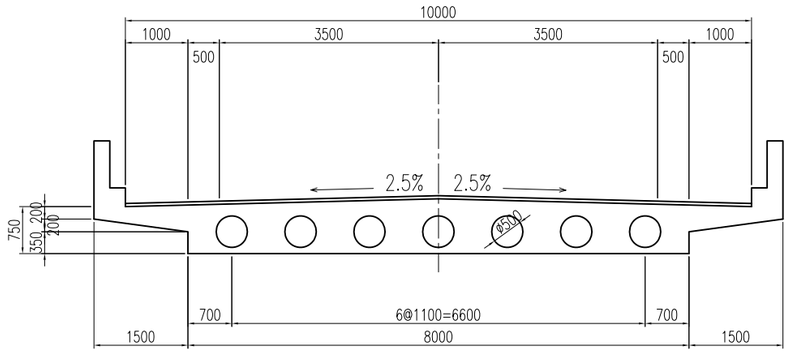

FRONT VIEW
S=1/100

ABUTMENT (A1)

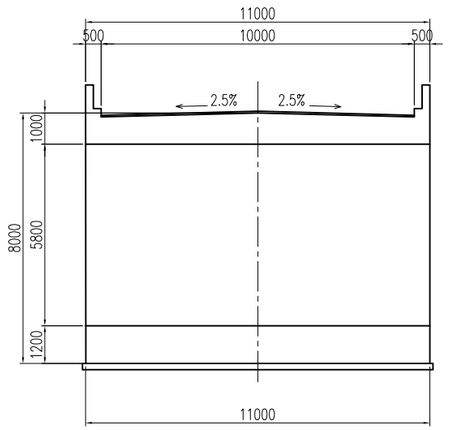

PIER (P1)

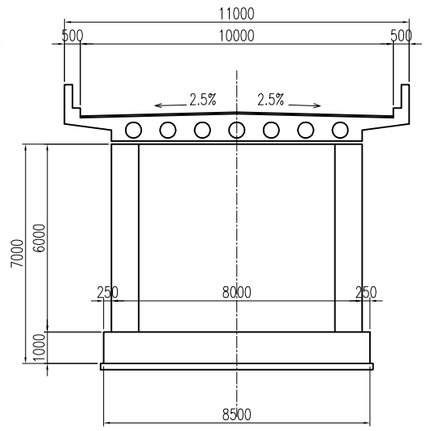

JICA JAPAN INTERNATIONAL COOPERATION AGENCY

NATIONAL ROAD ADMINISTRATION

REMARKS:

THE STUDY ON UPGRADING OF NAMPULA - CUAMBA ROAD

ORIENTAL CONSULTANTS CO., LTD.
JAPAN ENGINEERING CONSULTANTS CO., LTD.

	PREPARED BY	CHECKED BY	APPROVED BY
NAME			
SIGNATURE			
DATE			

DRAWING TITLE

BRIDGE STRUCTURE
(BR.No27 MUTIVASSE BRIDGE)

SCALE	SHEET NO.	DRAWING NO.	REV. NO.
			-

BR.NO.30 NAMUELA BRIDGE
GENERAL VIEW OF THE BRIDGE

PROFILE
S=1/100

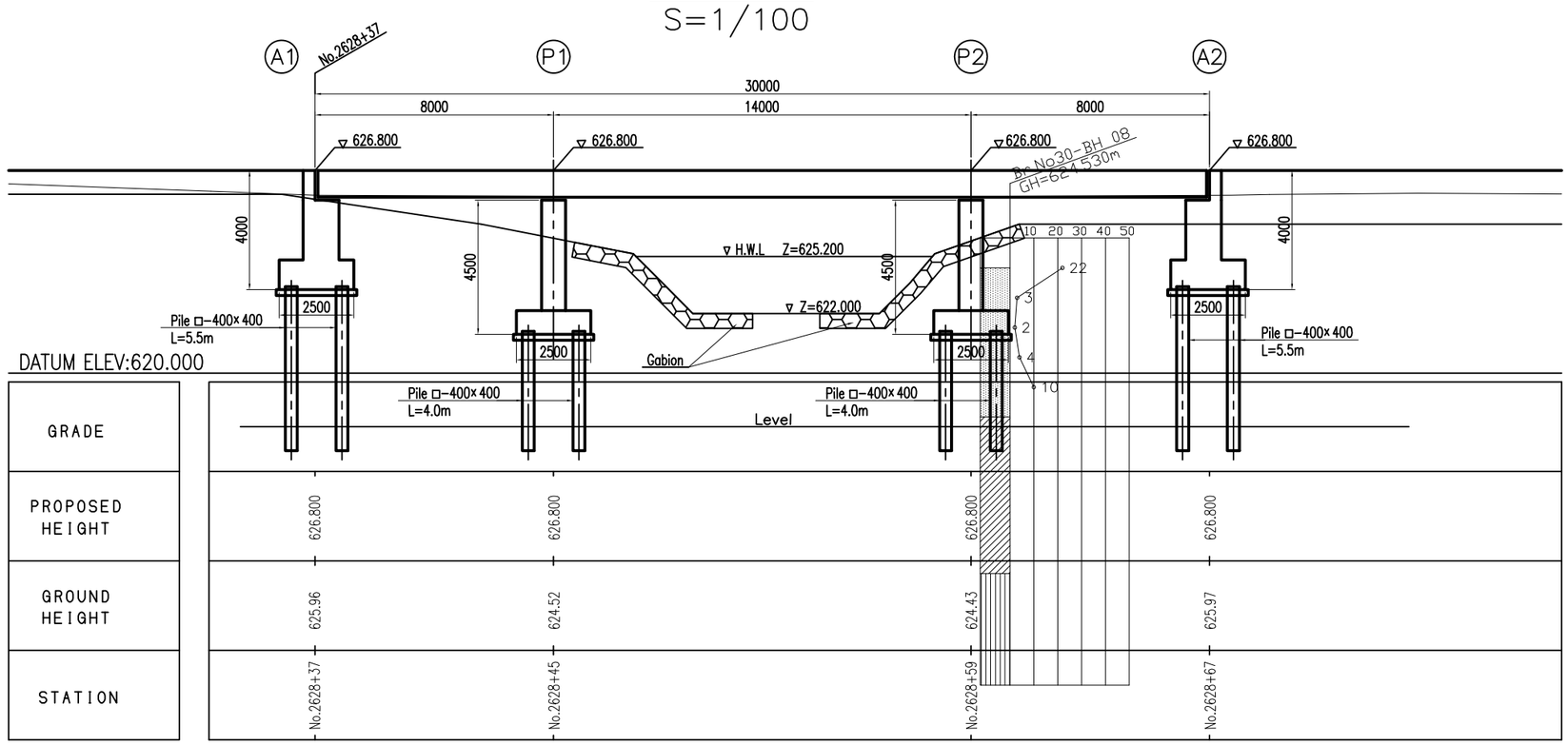

PLAN
S=1/100

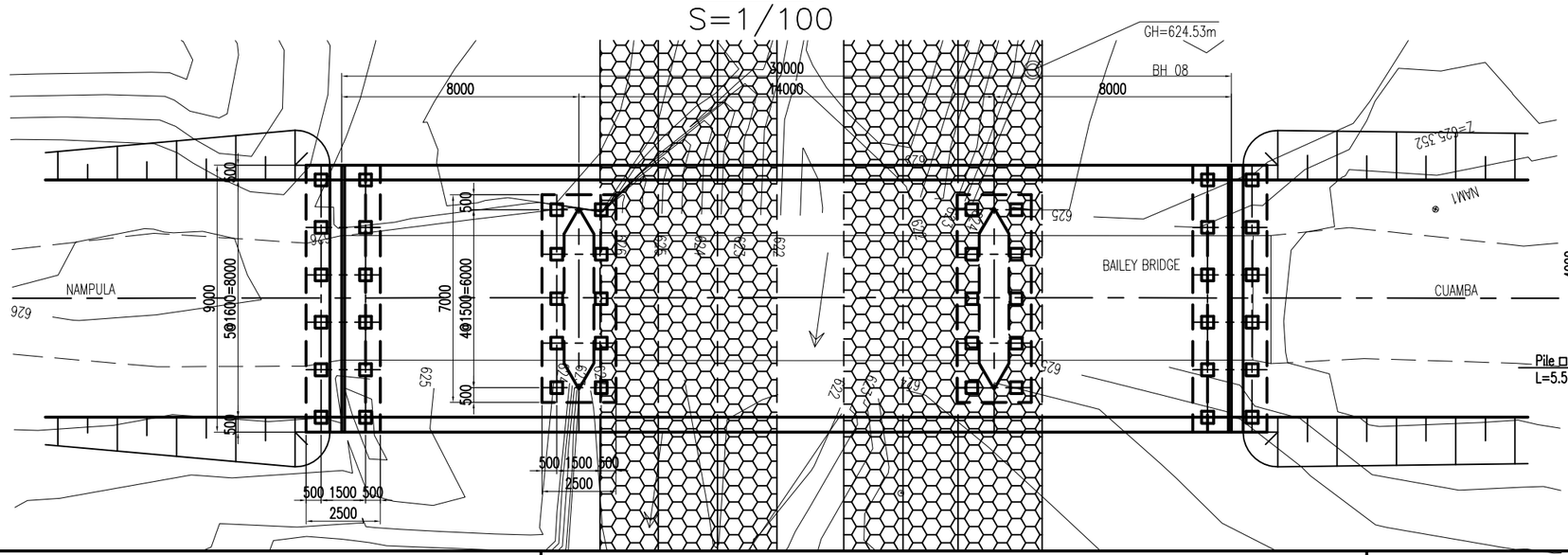

DESIGN CRITERIA

General Condition		
Design Live Load	NA,NB,NC Loading	
Design Speed	V=80km/h	
Bridge Length (Span Length)	30.00m (8.00m+14.00m+8.00m)	
Freeboard	0.5m	
Longitudinal Gradient	Level	
Cross-fall of Carriage way	2.50%	
Super Structure Type	RC Hollow Slab	
Sub Structure Type	Abutment	RC Revered-T
	Pier	RC Wall
Foundation Type	Abutment	A1:Pile foundation
		A2:Pile foundation
	Pier	P1:Pile foundation
		P2:Pile foundation

CROSS SECTION
S=1/50

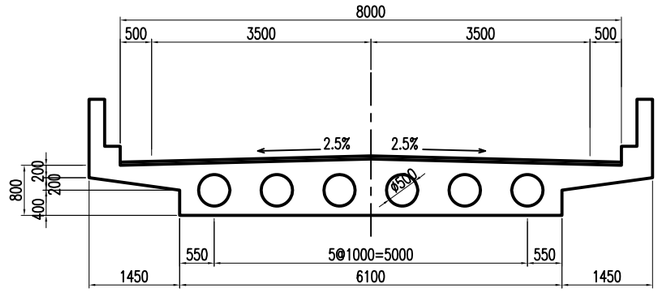

FRONT VIEW
S=1/100

ABUTMENT (A1)

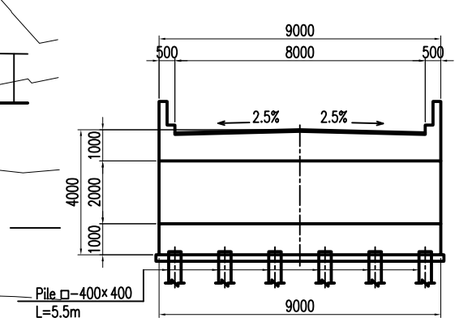

PIER (P1)

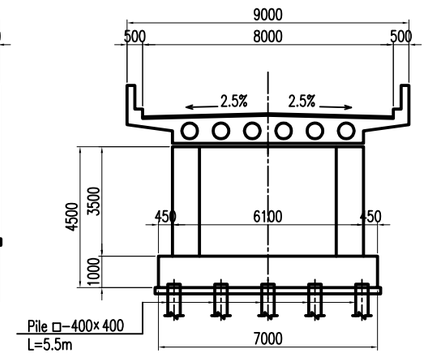

JICA JAPAN INTERNATIONAL COOPERATION AGENCY

ANE NATIONAL ROAD ADMINISTRATION

REMARKS:

THE STUDY ON UPGRADING OF NAMPULA - CUAMBA ROAD

ORIENTAL CONSULTANTS CO., LTD.
JEC JAPAN ENGINEERING CONSULTANTS CO., LTD.

	PREPARED BY	CHECKED BY	APPROVED BY
NAME			
SIGNATURE			
DATE			

DRAWING TITLE

BRIDGE STRUCTURE
(BR.No30 NAMUELA BRIDGE)

SCALE	SHEET NO.	DRAWING NO.	REV. NO.
			-

BR.NO.34 LURIO BRIDGE
GENERAL VIEW OF THE BRIDGE

PROFILE
S=1/200

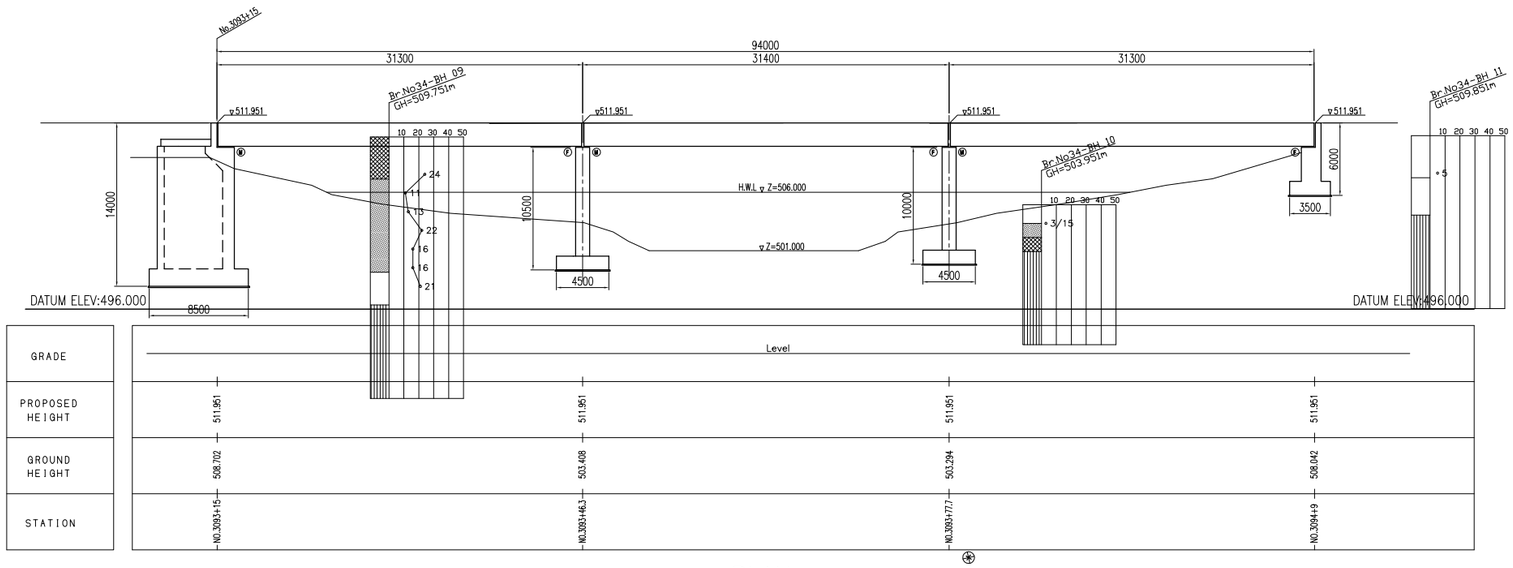

PLAN
S=1/200

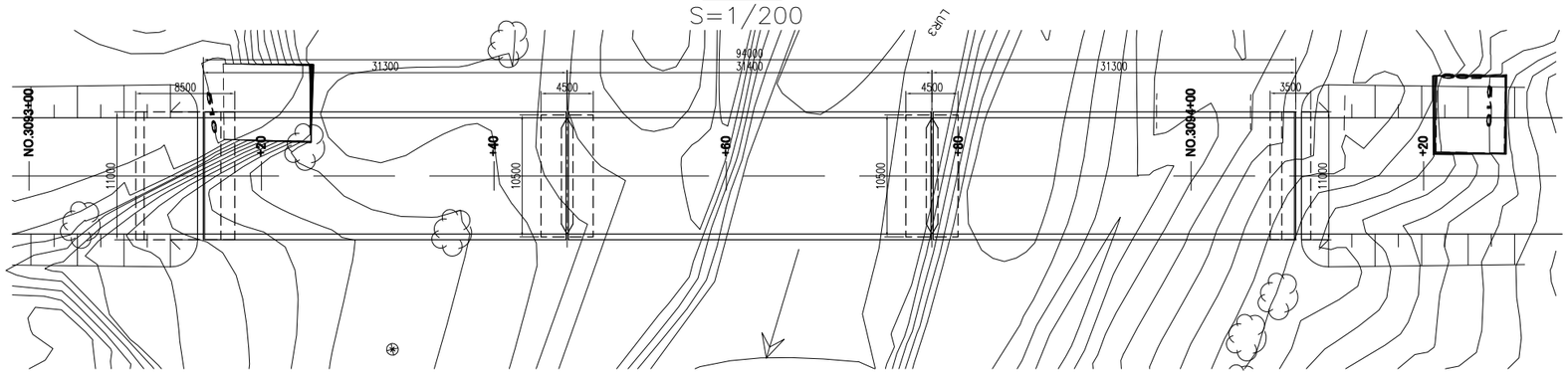

DESIGN CRITERIA

General Condition		
Design Live Load	NA. NB. NC Loading	
Design Speed	80km/h	
Bridge Length(Span Length)	94.00m(31.30m+31.40m+31.30m)	
Freeboard	1.0m	
Longitudinal Gradient	Level	
Cross-fall of Carriage way	2.5%	
Super Structure Type	PC-I Girder	
Sub Structure Type	Abutment	RC Revered-T
	Pier	RC Wall
Foundation Type	Abutment	A1:Spread foundation
		A2:Spread foundation
	Pier	P1:Spread foundation
		P2:Spread foundation

CROSS SECTION
S=1/50

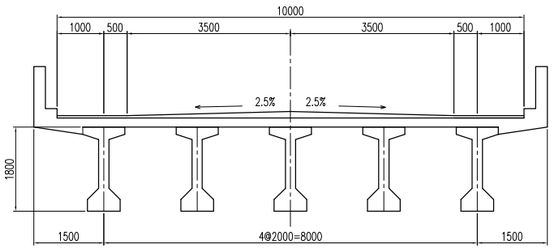

FRONT VIEW
S=1/200

ABUTMENT (A1)

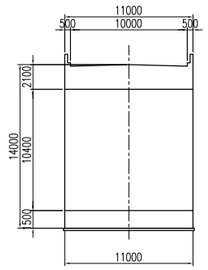

PIER (P1)

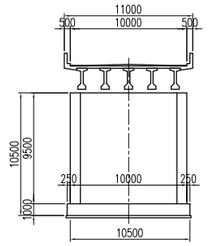

JICA JAPAN INTERNATIONAL COOPERATION AGENCY

NATIONAL ROAD ADMINISTRATION

REMARKS:

THE STUDY ON UPGRADING OF NAMPULA - CUAMBA ROAD

ORIENTAL CONSULTANTS CO., LTD.
JAPAN ENGINEERING CONSULTANTS CO., LTD.

	PREPARED BY	CHECKED BY	APPROVED BY
NAME			
SIGNATURE			
DATE			

DRAWING TITLE
BRIDGE STRUCTURE
(BR.No34 LURIO BRIDGE)

SCALE	SHEET NO.	DRAWING NO.	REV. NO.
			-

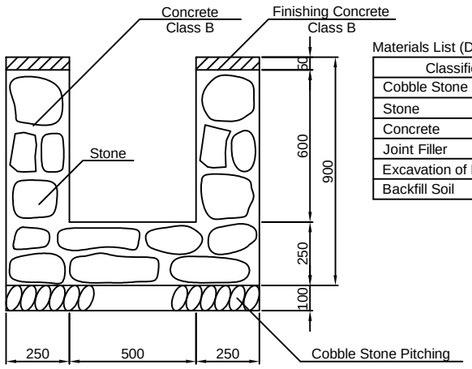

Materials List (Drainage Type-A) Per100m

Classification	Standard	Unit	Quantity	Remarks
Cobble Stone Pitching	t=10cm	m²	100	
Stone		m³	44	
Concrete	Class B	m³	14	
Joint Filler	t=10mm	m²	6	
Excavation of Foundation		m³	200	
Backfill Soil		m³	100	

Drainage Type-A

Scale = 1:25

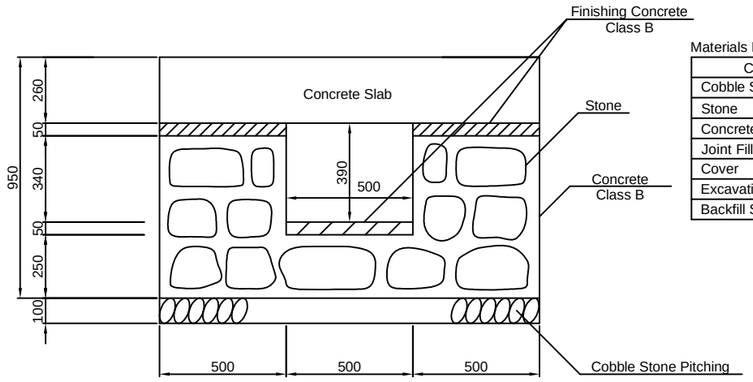

Materials List (Cross Culvert) Per100m

Classification	Standard	Unit	Quantity	Remarks
Cobble Stone Pitching	t=10cm	m²	150	
Stone		m³	61	
Concrete	Class B	m³	23	
Joint Filler	t=10mm	m²	8	
Cover		Piece	50	
Excavation of Foundation		m³	263	
Backfill Soil		m³	105	

Cross Culvert

Scale = 1:25

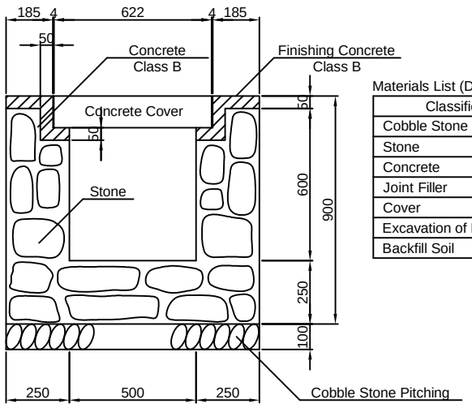

Materials List (Drainage Type-B) Per100m

Classification	Standard	Unit	Quantity	Remarks
Cobble Stone Pitching	t=10cm	m²	100	
Stone		m³	42	
Concrete	Class B	m³	14	
Joint Filler	t=10mm	m²	6	
Cover		Piece	200	
Excavation of Foundation		m³	200	
Backfill Soil		m³	100	

Drainage Type-B

Scale = 1:25

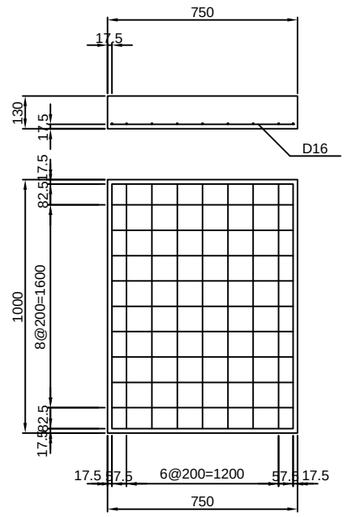

Materials List (Slab) Per100

Classification	Standard	Unit	Quantity	Remarks
Concrete	Class A	m³	78	
Reinforcement	SD345 D16	t	5.16	
Form		m²	482	

Plan of Slab

Scale = 1:50

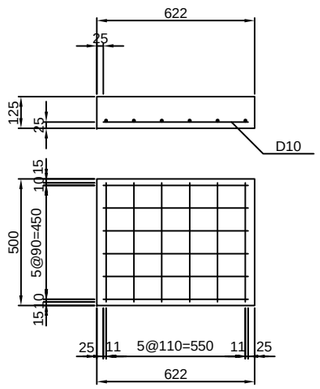

Materials List (Cover) Per100

Classification	Standard	Unit	Quantity	Remarks
Concrete	Class A	m³	4	
Reinforcement	SD345 D10	t	0.35	
Form		m²	9	

Plan of Cover

Scale = 1:25

JICA JAPAN INTERNATIONAL COOPERATION AGENCY

NATIONAL ROAD ADMINISTRATION

REMARKS:

THE STUDY ON UPGRADING OF NAMPULA - CUAMBA ROAD

ORINTAL CONSULTANTS CO., LTD.
JAPAN ENGINEERING CONSULTANTS CO., LTD.

	PREPARED BY	CHECKED BY	APPROVED BY
NAME			
SIGNATURE			
DATE			

DRAWING TITLE

Drainage Structure Details (1/2)

SCALE	SHEET NO.	DRAWING NO.	REV. NO.
-		127	-

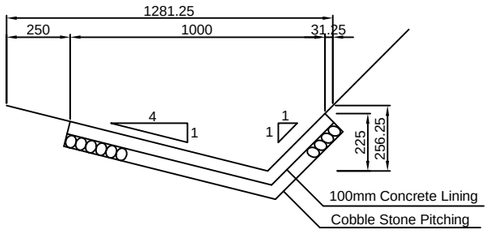

Concrete Lined Side Drain

Scale = 1:50

Materials List (Concrete Lined Side Drain) Per100m

Classification	Standard	Unit	Quantity	Remarks
Cobble Stone Pitching	t=10cm	m^2	235	
Concrete	Class B	m^3	29	
Joint Filler	t=10mm	m^2	3	
Excavation		m^3	124	

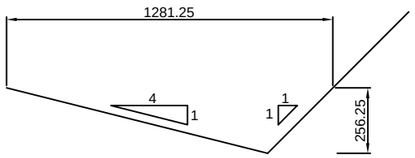

Soil Lined Side Drain

Scale = 1:50

Materials List (Soil Lined Side Drain) Per100m

Classification	Standard	Unit	Quantity	Remarks
Excavation		m^3	66	
Fairing		m^2	284	

JAPAN INTERNATIONAL COOPERATION AGENCY

NATIONAL ROAD ADMINISTRATION

REMARKS:

THE STUDY ON UPGRADING OF NAMPULA - CUAMBA ROAD

ORINTAL CONSULTANTS CO., LTD.
JAPAN ENGINEERING CONSULTANTS CO., LTD.

	PREPARED BY	CHECKED BY	APPROVED BY
NAME			
SIGNATURE			
DATE			

DRAWING TITLE

Drainage Structure Details (2/2)

SCALE	SHEET NO.	DRAWING NO.	REV. NO.
-		128	-

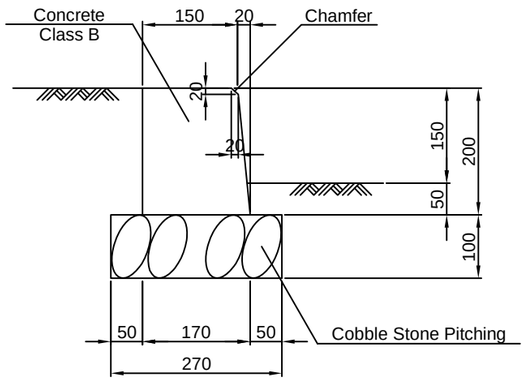

Concrete Kerb

Scale = 1:10

Materials List (Concrete Curve)

Per100m

Classification	Standard	Unit	Quantity	Remarks
Cobble Stone Pitching	t=10cm	m^2	27	
Concrete	Class B	m^3	3	
Form		m^2	40	
Joint Filler	t=10mm	m^2	0.3	

JAPAN INTERNATIONAL COOPERATION AGENCY

NATIONAL ROAD ADMINISTRATION

REMARKS:

THE STUDY ON UPGRADING OF NAMPULA - CUAMBA ROAD

ORINTAL CONSULTANTS CO., LTD.
JAPAN ENGINEERING CONSULTANTS CO., LTD.

	PREPARED BY	CHECKED BY	APPROVED BY
NAME			
SIGNATURE			
DATE			

DRAWING TITLE

Ancillary Work Details

SCALE	SHEET NO.	DRAWING NO.	REV. NO.
-		129	-

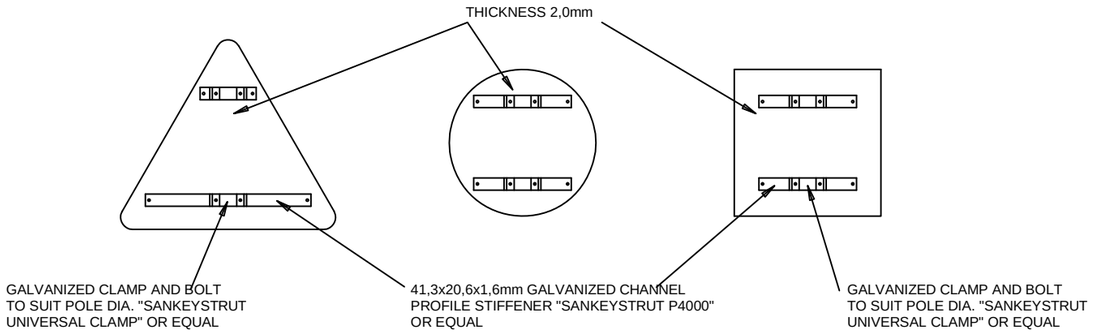

TYPICAL FIXING DETAIL

NOT TO SCALE

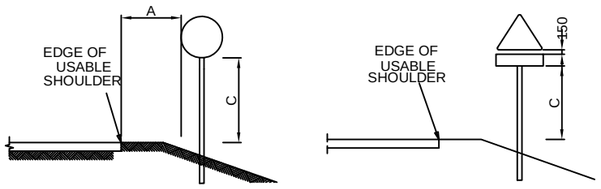

SHOULDER (NO KERB)

NOT TO SCALE

TABLE PERMANENT SIGN PLACEMENT DIMENSIONS			
POSITIONING VERTICAL	LATERAL	PREFERRED (mm)	RANGE (mm)
	A	2100	1800-4000
	B	600	300-600
C		2100	750-2500
D		2500	2100-3000
	F	1200	600-2000
G		1200	800-1600
K		2000	1600-2400
	R	1500	600-1500

NOTES:

1. ALL FOUNDATION BACKFILL WILL BE DONE WITH A SOIL : CEMENT MIXTURE OF 10 : 1

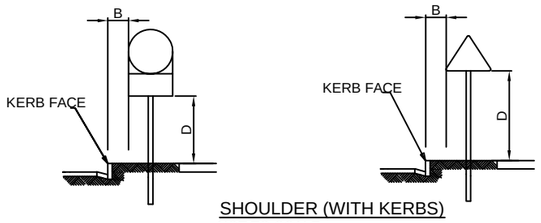

SHOULDER (WITH KERBS)

NOT TO SCALE

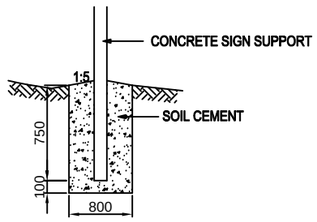

FOUNDATION DETAIL

NOT TO SCALE

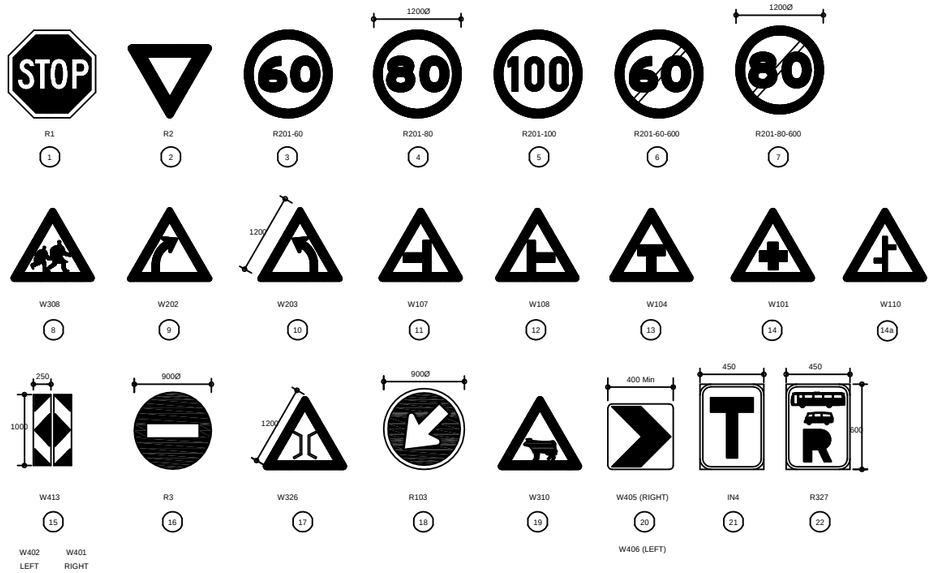

REGULATORY AND WARNING SIGNS

NOT TO SCALE

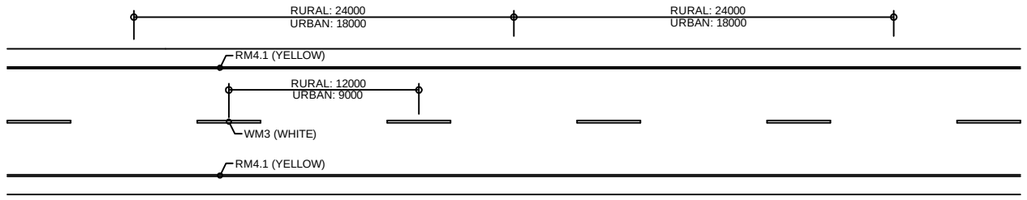

NOTE:
50mm PREFERRED SEPERATION BETWEEN
ROAD MARKINGS AND ROAD STUDS.

TYPICAL ROADSTUD USE ON TWO-WAY ROADS

NOT TO SCALE

JICA JAPAN INTERNATIONAL COOPERATION AGENCY

NATIONAL ROAD ADMINISTRATION

REMARKS:

THE STUDY ON UPGRADING OF NAMPULA - CUAMBA ROAD

ORINTAL CONSULTANTS CO., LTD.
JAPAN ENGINEERING CONSULTANTS CO., LTD.

	PREPARED BY	CHECKED BY	APPROVED BY
NAME			
SIGNATURE			
DATE			

DRAWING TITLE

Road Safety Facilities

SCALE	SHEET NO.	DRAWING NO.	REV. NO.
-		130	-