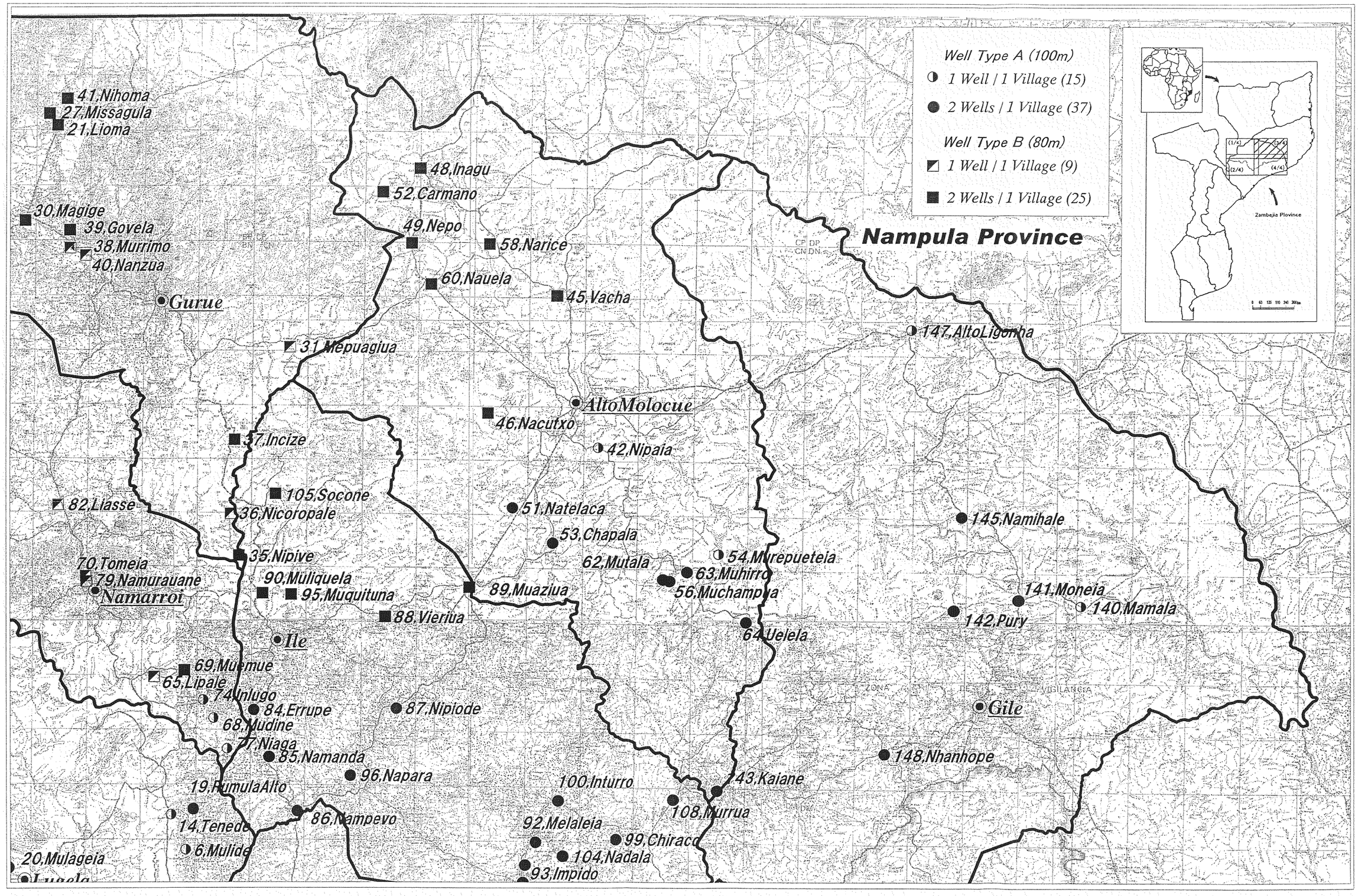

3．井戸建設対象村落(3/4)

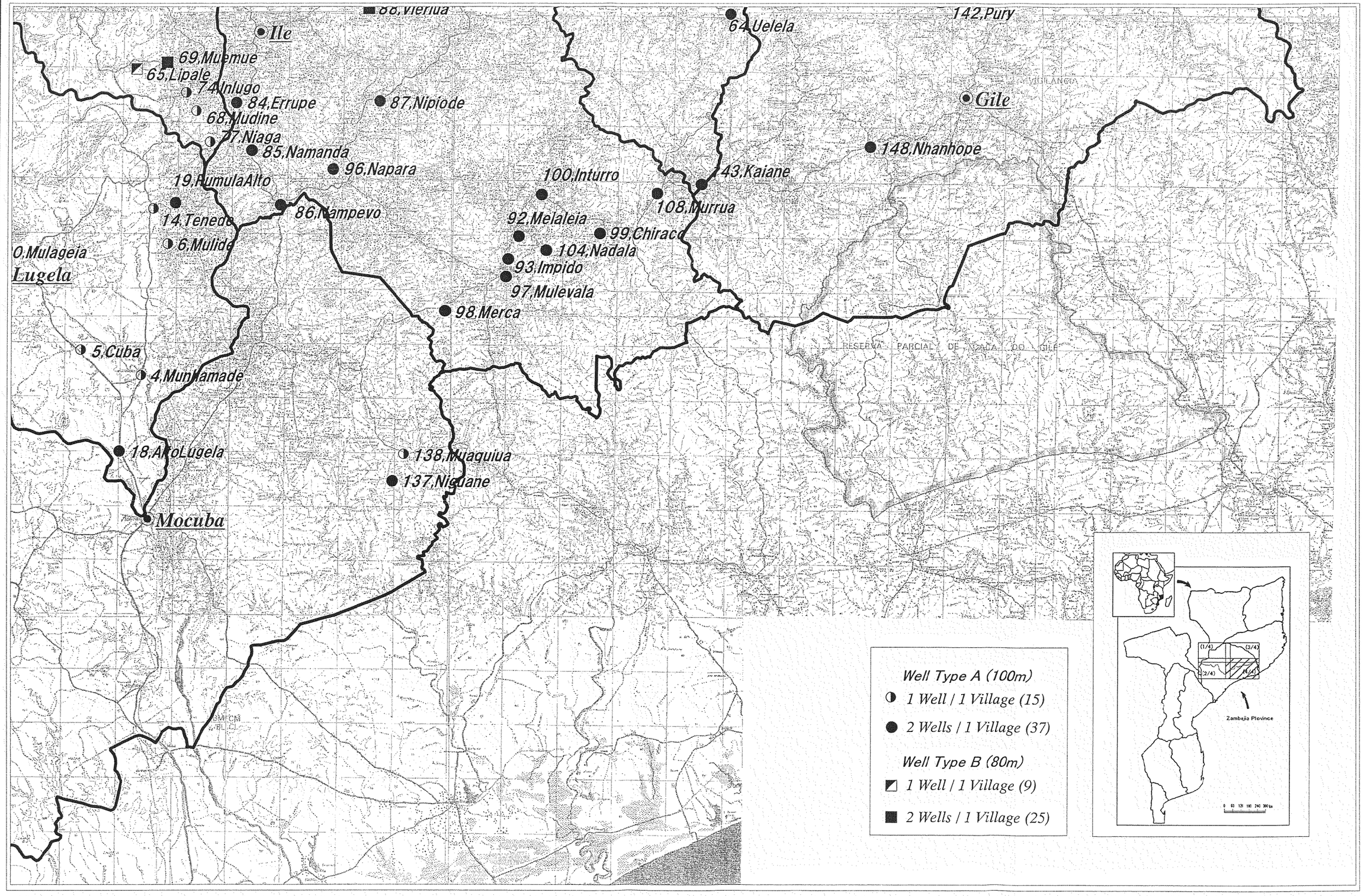

4．井戸建設対象村落(4/4)

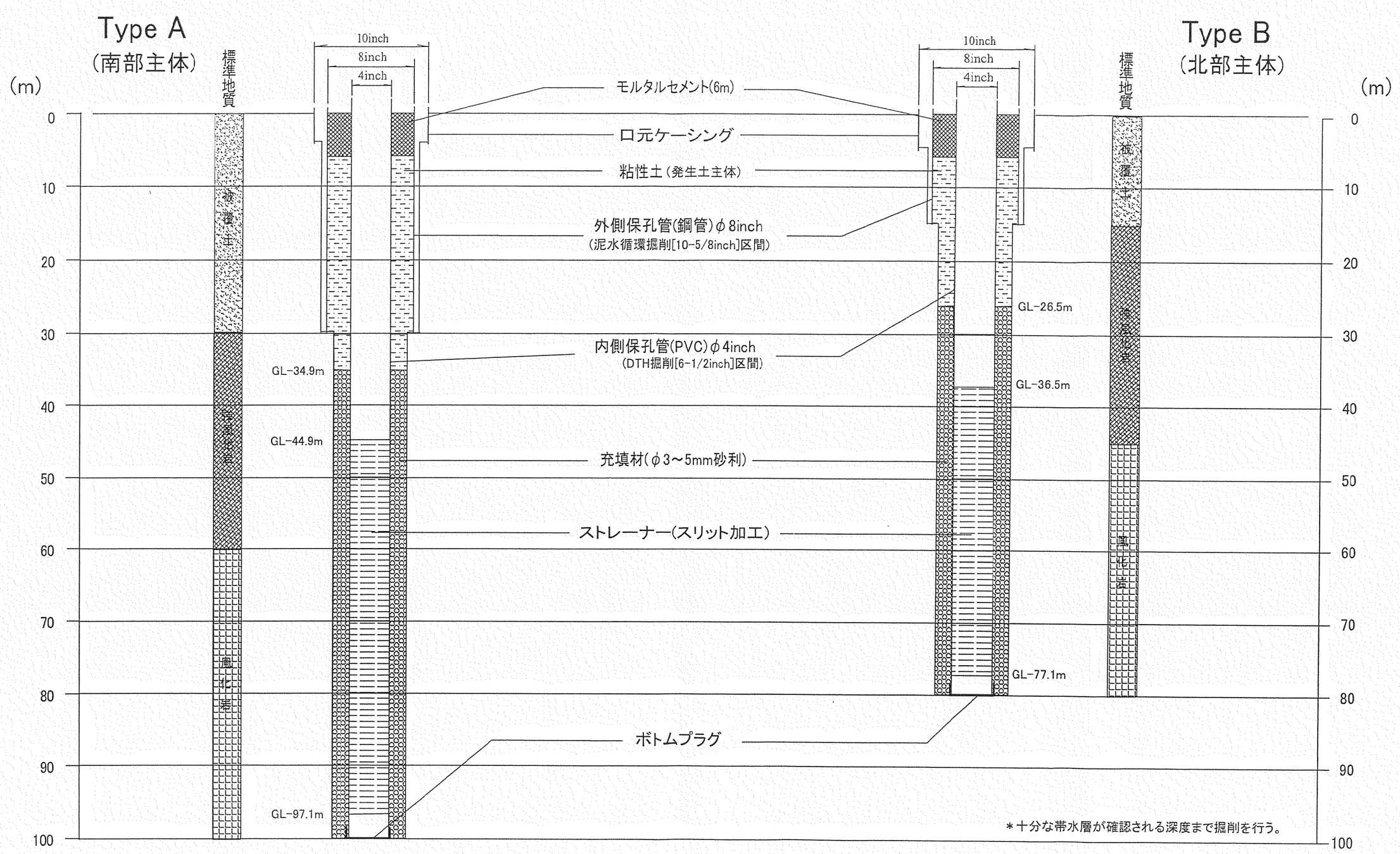

Aタイプ井戸建設村落及び本数

No.	Village Name	No.	Village Name	No.	Village Name	No.	Village Name	No.	Village Name
4	Munhamade (1)	54	Murepueteia (1)	92	Melaleia (2)	126	Liciro (1)	143	Kaiane (2)
5	Cuba (1)	56	Muchampua (2)	93	Impido (2)	127	Belua (2)	145	Namihale (2)
6	Mulide (1)	62	Mutala (2)	96	Napara (2)	129	Chinangua (2)	147	AltoLigonha (1)
14	Tenede (1)	63	Muhirro (2)	97	Mulevala (2)	132	Murramba (2)	148	Nhanhope (2)
15	Ebide (1)	64	Uelela (2)	98	Merca (2)	135	Tonga (2)		
17	Tacuane (1)	68	Mudine (1)	99	Chiraco (2)	136	Mebudana (2)		
18	AltoLugela (2)	74	Inlugo (1)	100	Inturro (2)	137	Niguane (2)		
19	RumulaAlto (2)	77	Niaga (1)	104	Nadala (2)	138	Muaquiua (1)		
20	Mulageia (2)	84	Errupe (2)	108	Murrua (2)	139	AltoBenfica (2)		
42	Nipaia (1)	85	Namanda (2)	113	Caombe (2)	140	Mamala (1)		
51	Natelaca (2)	86	Nampevo (2)	116	Intocota (2)	141	Moneia (2)		
53	Chapala (2)	87	Nipiode (2)	124	Lipale (2)	142	Pury (2)	Total	52Village(69Wells)

Bタイプ井戸建設村落及び本数

No.	Village Name	No.	Village Name	No.	Village Name
21	Lioma (2)	45	Vacha (2)	82	Liasse (1)
27	Missagula (2)	46	Nacutxo (2)	88	Vieriua (2)
30	Magige (2)	48	Inagu (2)	89	Muaziua (2)
31	Mepuagiua (1)	49	Nepo (2)	90	Muliquela (2)
34	Mahara1 (2)	52	Carmano (2)	95	Muquituna (2)
35	Nipive (2)	58	Narice (2)	105	Socone (2)
36	Nicoropale (1)	60	Nauela (2)	118	Nehia (2)
37	Incize (2)	65	Lipale (1)	119	Malico (2)
38	Murrimo (1)	69	Muemue (2)	120	Mogoliua (2)
39	Govela (2)	70	Tomeia (1)	121	Muela (1)
40	Nanzua (1)	79	Namurauane (1)		
41	Nihoma (2)	81	Mutuela (2)	Total	34Village(59Wells)

5. 井戸標準断面図

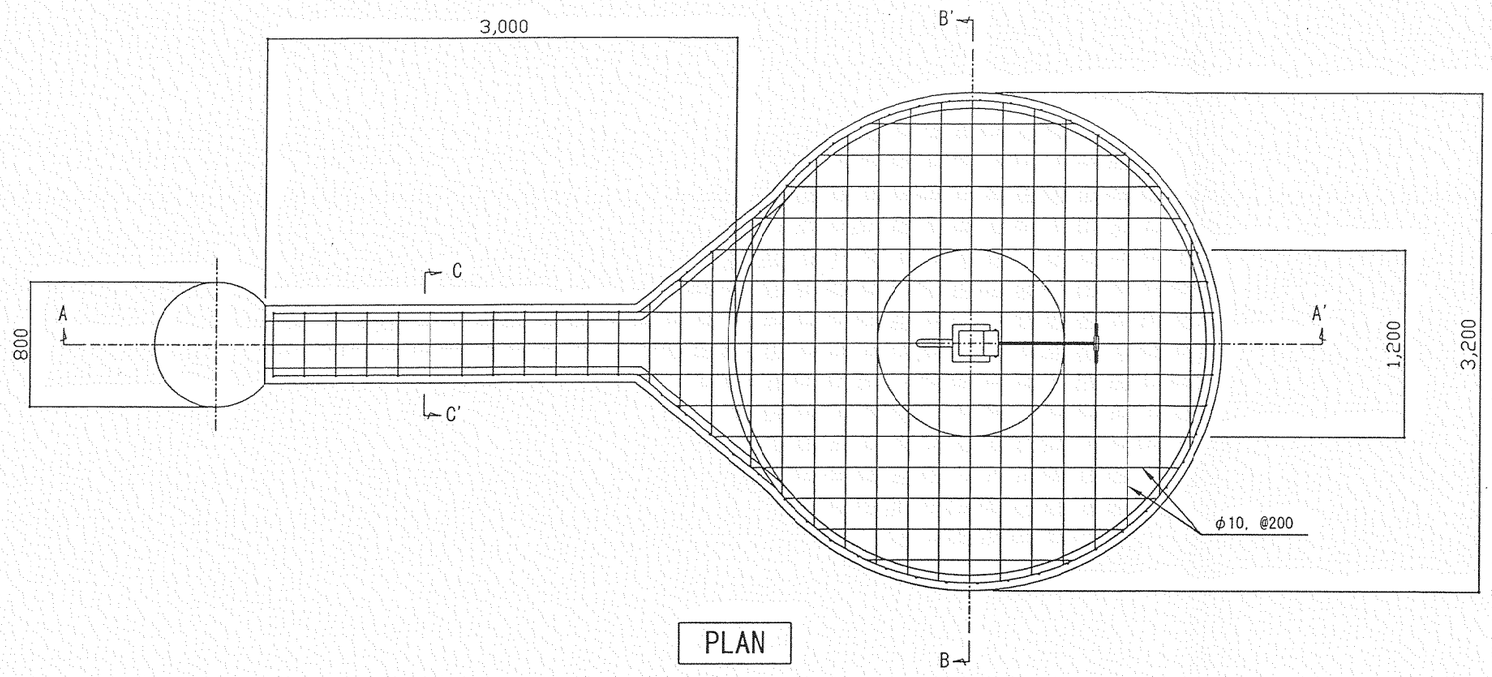

PLAN

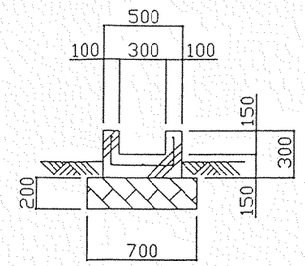

SECTION C-C'

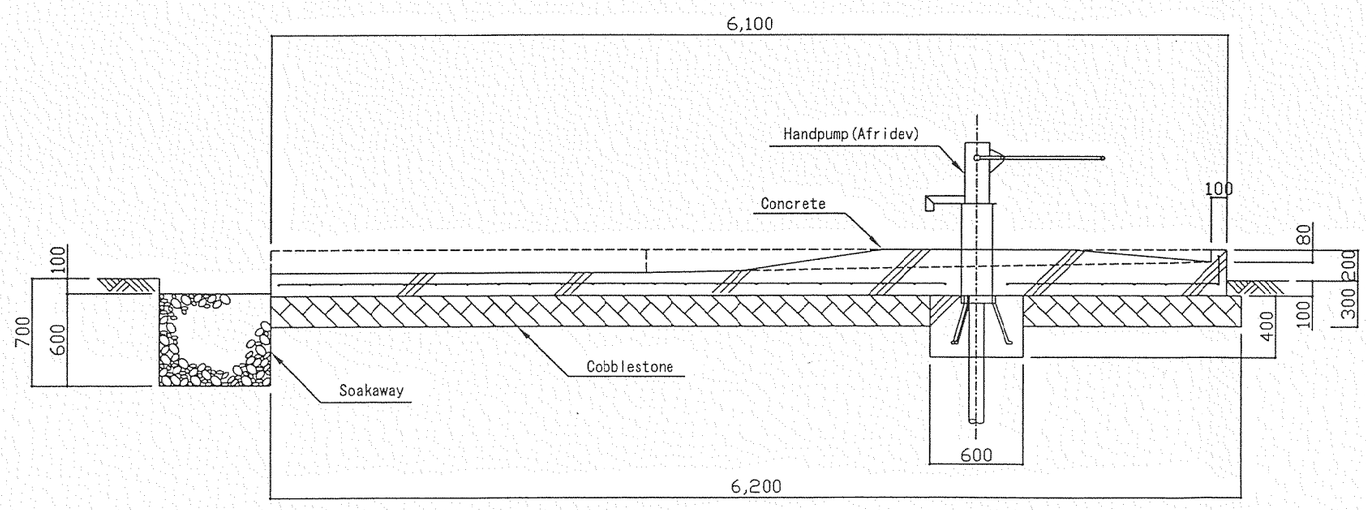

SECTION A-A'

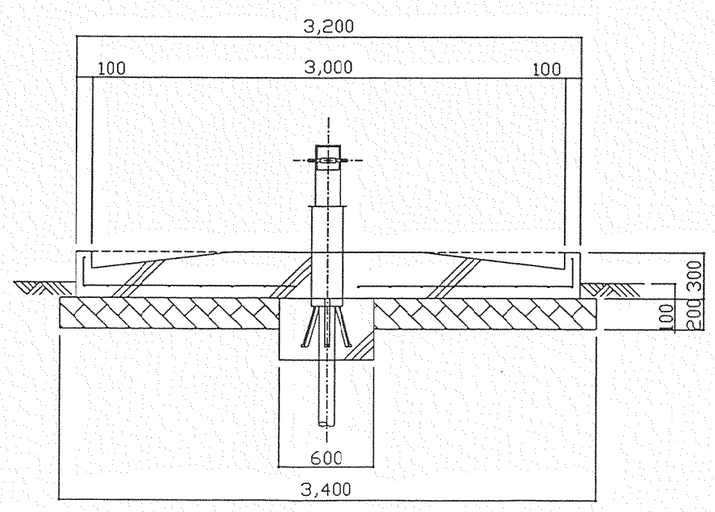

SECTION B-B'

6．ハンドポンプ取り付け・エプロン構造図