| JAPAN INTERNATIONAL COOPERATION AGENCY<br>KATAHIRA & ENGINEERS INTERNATIONAL | DESIGNED BY: Name A. GOURLEY, Sign, Date | CHECKED BY: Name T. OKUMURA, Sign, Date | SUBMITTED BY: Name M. KIUCHI, Sign, Date | REPUBLIC OF INDONESIA<br>MINISTRY OF PUBLIC WORKS<br>DIRECTORATE GENERAL OF HIGHWAYS<br>APPROVED BY: Ir. HERRY VAZA M.Eng.Sc, NIP. : 110038400, Sign, Date | PROJECT AND LOCATION :<br>DETAILED DESIGN STUDY OF<br>NORTH JAVA CORRIDOR FLYOVER PROJECT<br>TANGGULANGIN FLYOVER - CONTRACT PACKAGE 3<br>( PETERONGAN -TANGGULANGIN )<br>EAST JAVA PROVINCE | SCALE : 1 : 40<br>FULL SIZE A3 | DRAWING TITLE :<br>**CONCRETE BARRIER REINFORCEMENT AT PIER COPING P2 , P6 (EXP)** | DRAWING NO : TSB-031<br>SHEET NO : 31 / 45 |
|---|---|---|---|---|---|---|---|

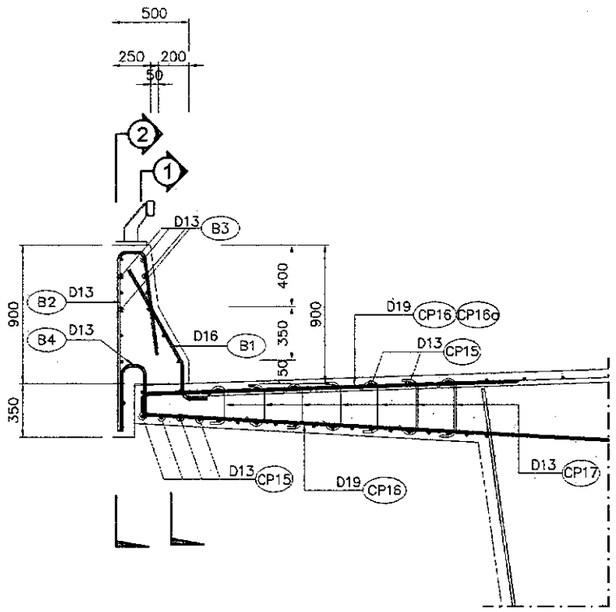


2 ELEVATION
SCALE 1:40

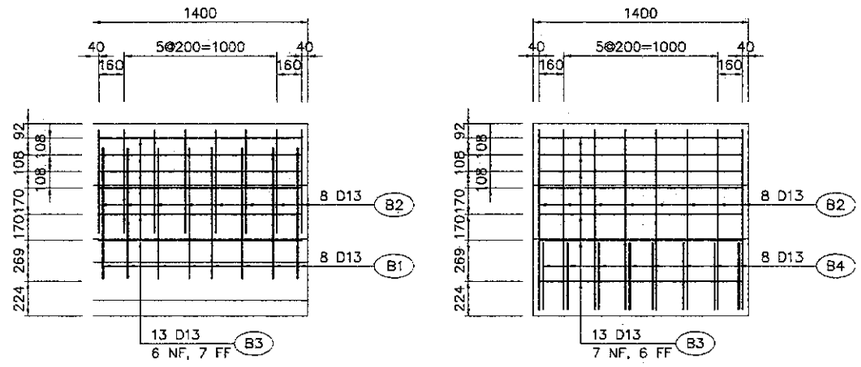


3 SECTION 1-1
SCALE 1:40

4 SECTION 2-2
SCALE 1:40

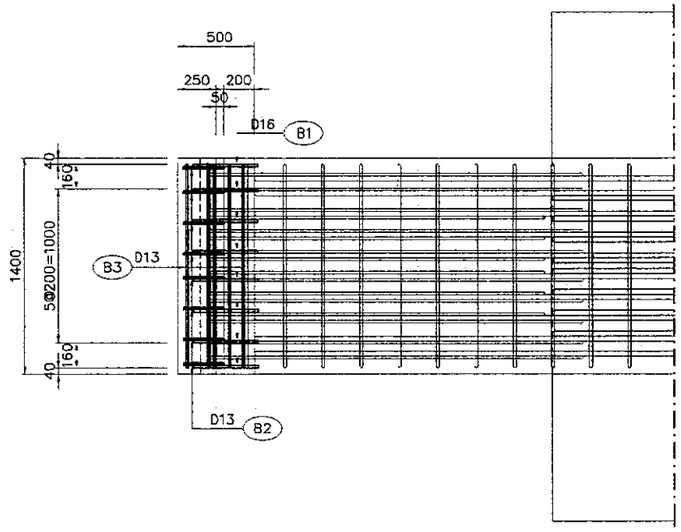


1 PLAN
SCALE 1:40

## BAR BENDING DIAGRAM

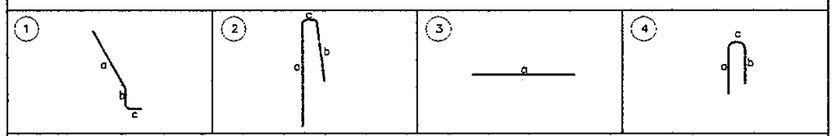


## SCHEDULE OF REINFORCEMENT

| LOCATION | BAR MARK | SIZE (mm) | BEND TYPE | DIMENSION (mm) OUT TO OUT a | b | c | d | e | f | LENGTH (mm) | NO. REQ'D. | UNIT WEIGHT (kg/m.) | WEIGHT (kg.) | VOLUME OF CONCRETE (cu.m) |
|---|---|---|---|---|---|---|---|---|---|---|---|---|---|---|
| BARRIER PIER 2, PIER 6 | BARRIER | | | | | | | | | | | | | 0.378 |
| | B1 | 16 | 1 | 700 | 220 | 150 | | | | 1070 | 8 | 1.58 | 14 | |
| | B2 | 13 | 2 | 1165 | 650 | 145 | | | | 1960 | 8 | 1.04 | 16 | |
| | B3 | 13 | 3 | 1320 | | | | | | 1320 | 13 | 1.04 | 18 | |
| | B4 | 13 | 4 | 420 | 330 | 160 | | | | 910 | 8 | 1.04 | 8 | |
| | | | | | | | | | TOTAL WEIGHT FOR / BARRIER = 56 Kgs. | | | | | |

THE REINFORCEMENT SHOWN ON THIS TABLE IS FOR REFERENCE ONLY, THE CONTRACTOR SHOULD CHECKED AND VERIFY ALL DIMENSIONS, SIZES AND QUANTITIES OF REINFORCEMENT.

NOTES :
1. ALL DIMENSION ARE IN MILIMETERS.
2. CONCRETE : fc' = 30 MPa
3. REINFORCING STEEL : YIELD STRENGTH = 390 N/mm2

| JAPAN INTERNATIONAL COOPERATION AGENCY<br>KATAHIRA & ENGINEERS INTERNATIONAL | DESIGNED BY | CHECKED BY | SUBMITTED BY | REPUBLIC OF INDONESIA<br>MINISTRY OF PUBLIC WORKS<br>DIRECTORATE GENERAL OF HIGHWAYS | PROJECT AND LOCATION : | SCALE : | DRAWING TITLE : | DRAWING NO : |
|---|---|---|---|---|---|---|---|---|
| | Name: A. GOURLEY | Name: T. OKUMURA | Name: M. KIUCHI | APPROVED BY: Ir. HERRY VAZA M,Eng.Sc<br>NIP. : 110038400 | DETAILED DESIGN STUDY OF<br>NORTH JAVA CORRIDOR FLYOVER PROJECT<br>TANGGULANGIN FLYOVER - CONTRACT PACKAGE 3<br>( PETERONGAN - TANGGULANGIN )<br>EAST JAVA PROVINCE | 1 : 10<br>1 : 50<br>1 : 80 | COMPOSITE COLUMN CASING DETAIL<br>( P3) | TSB-032 |
| | Sign | Sign | Sign | Sign | | FULL SIZE A3 | | SHEET NO : 32 / 45 |
| | Date | Date | Date | Date | | | | |

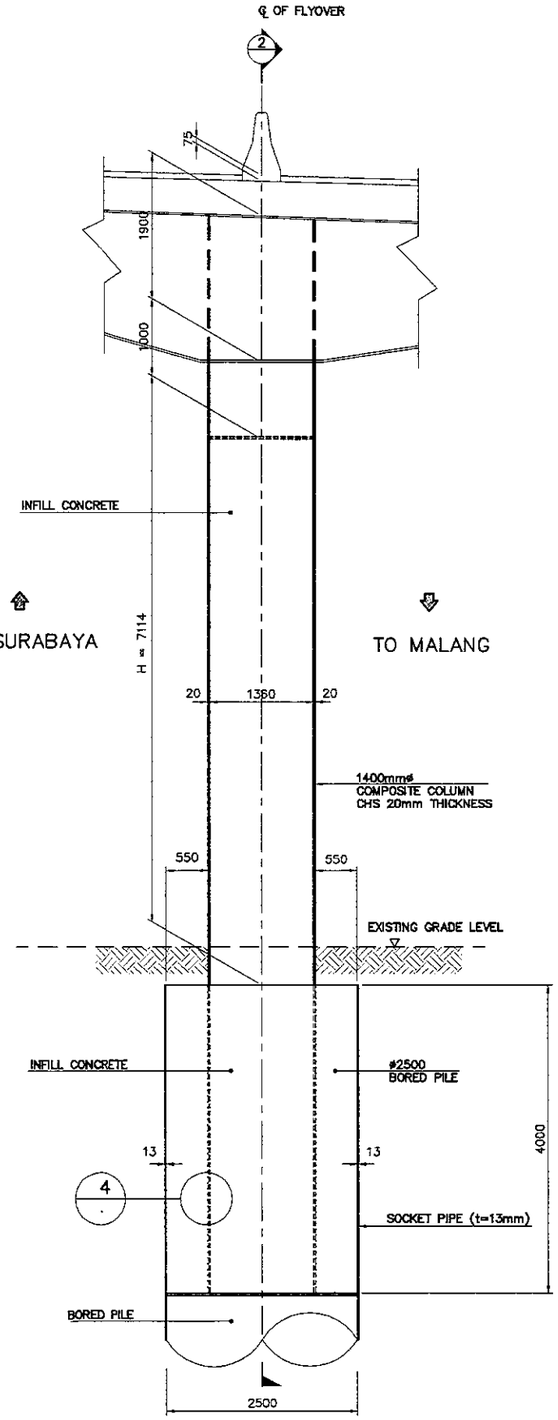


1 ELEVATION
SCALE 1:80

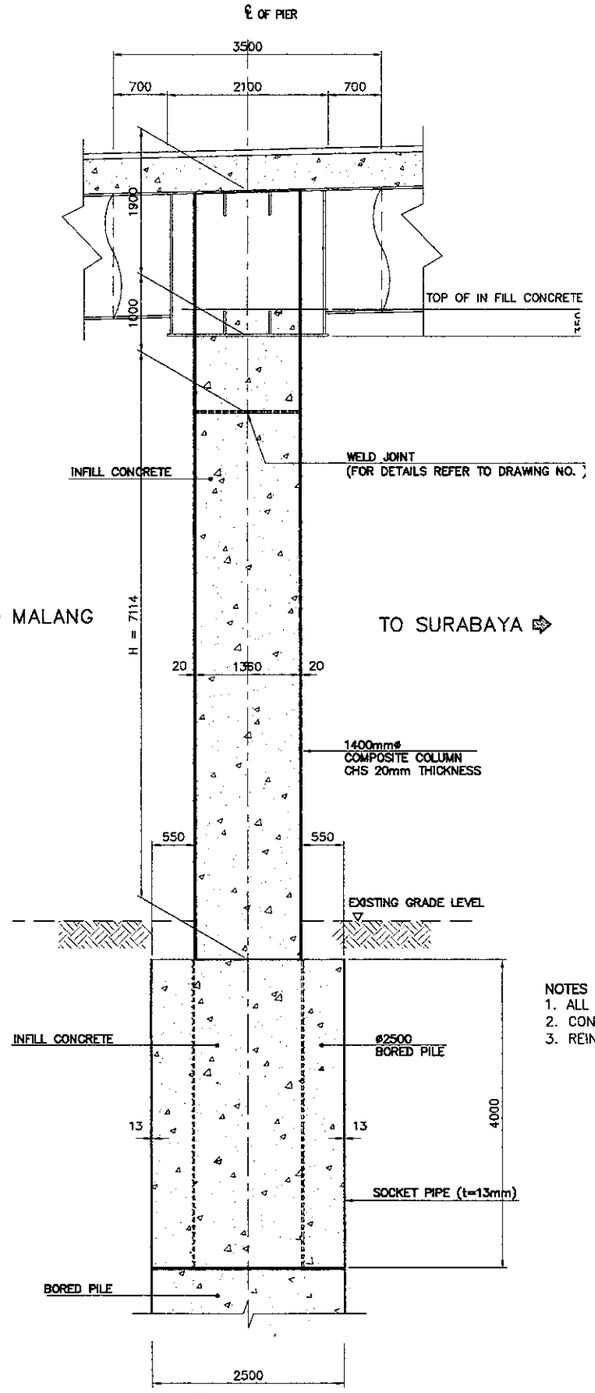


2 SECTION
SCALE 1:80

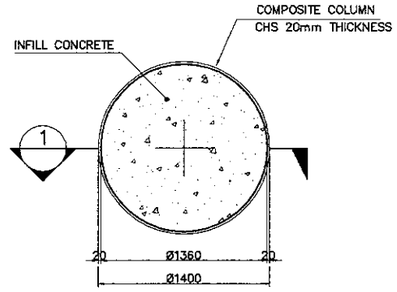


3 SECTION
SCALE 1:50

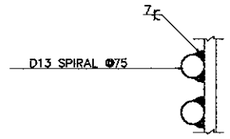


4 DETAIL
SCALE 1:10

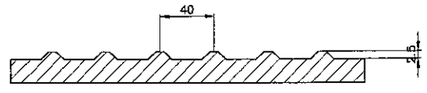


5 INNER RIB DETAIL
NOT TO SCALE

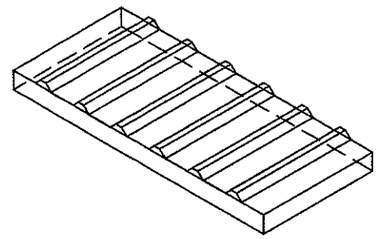

ISOMETRIC VIEW

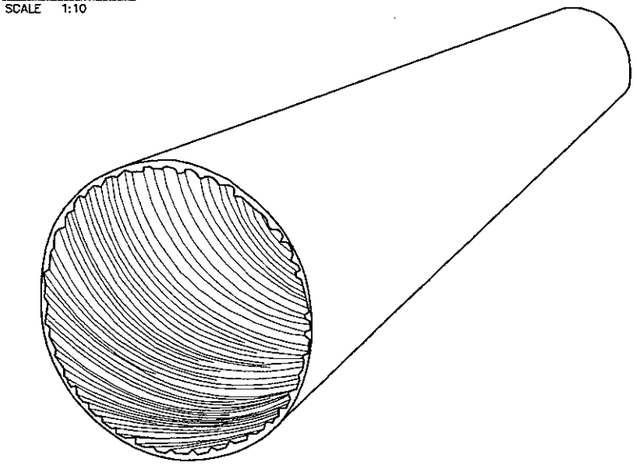

ISOMETRIC VIEW

NOTES :
1. ALL DIMENSIONS ARE IN MILLIMETERS
2. CONCRETE : fc' = 30 MPa
3. REINFORCING STEEL : YIELD STRENGTH = 390 N/mm2

## BAR BENDING DIAGRAM

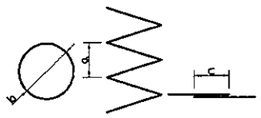


## SCHEDULE OF REINFORCEMENT

| LOCATION | BAR MARK | SIZE (mm) | BEND TYPE | DIMENSION(mm) OUT TO OUT a | b | c | d | e | f | LENGTH (mm) | NO. REQ'D. | UNIT WEIGHT (kg/m) | WEIGHT (kg) |
|---|---|---|---|---|---|---|---|---|---|---|---|---|---|
| PIER P3 | | 13 | – | 75 | 1400 | 450 | | | | 248032 | 1 | 1.04 | 258 |
| | | | | | | | | | | TOTAL WEIGHT / COLUMN = 258 Kgs. | | | |

| CONCRETE VOLUME (M3) | |
|---|---|
| P3 | 18.106 |

| PIER NO. | DIMENSION(mm) OUT TO OUT NO. OF PCS. | HEIGHT (H) | DIAMETER (MM)* | THICKNESS (MM) | TOTAL LENGTH | REMARKS |
|---|---|---|---|---|---|---|
| P3 | 1 | 7114 | 1400 | 20 | 11114 | CORRUGATED |
| | | | | | | |

* OUTSIDE DIAMETER OF COMPOSITE COLUMN

COMPOSITE COLUMN CASING DETAIL (P3)
SCALE AS SHOWN

PRINTED: OCT. 18, 2006

| JAPAN INTERNATIONAL COOPERATION AGENCY / KATAHIRA & ENGINEERS INTERNATIONAL | DESIGNED BY | CHECKED BY | SUBMITTED BY | REPUBLIC OF INDONESIA MINISTRY OF PUBLIC WORKS DIRECTORATE GENERAL OF HIGHWAYS | PROJECT AND LOCATION : | SCALE : | DRAWING TITLE : | DRAWING NO : |
|---|---|---|---|---|---|---|---|---|
| | Name: A. GOURLEY | Name: T. OKUMURA | Name: M. KIUCHI | | DETAILED DESIGN STUDY OF NORTH JAVA CORRIDOR FLYOVER PROJECT TANGGULANGIN FLYOVER - CONTRACT PACKAGE 3 ( PETERONGAN - TANGGULANGIN ) EAST JAVA PROVINCE | 1 : 10<br>1 : 50<br>1 : 80 | COMPOSITE COLUMN CASING DETAIL ( P4 & P5 ) | TSB-033 |
| | Sign | Sign | Sign | APPROVED BY: Ir. HERRY VAZA M,Eng.Sc NIP. : 110038400 | | FULL SIZE A3 | | SHEET NO : 33 / 45 |
| | Date | Date | Date | Sign / Date | | | | |

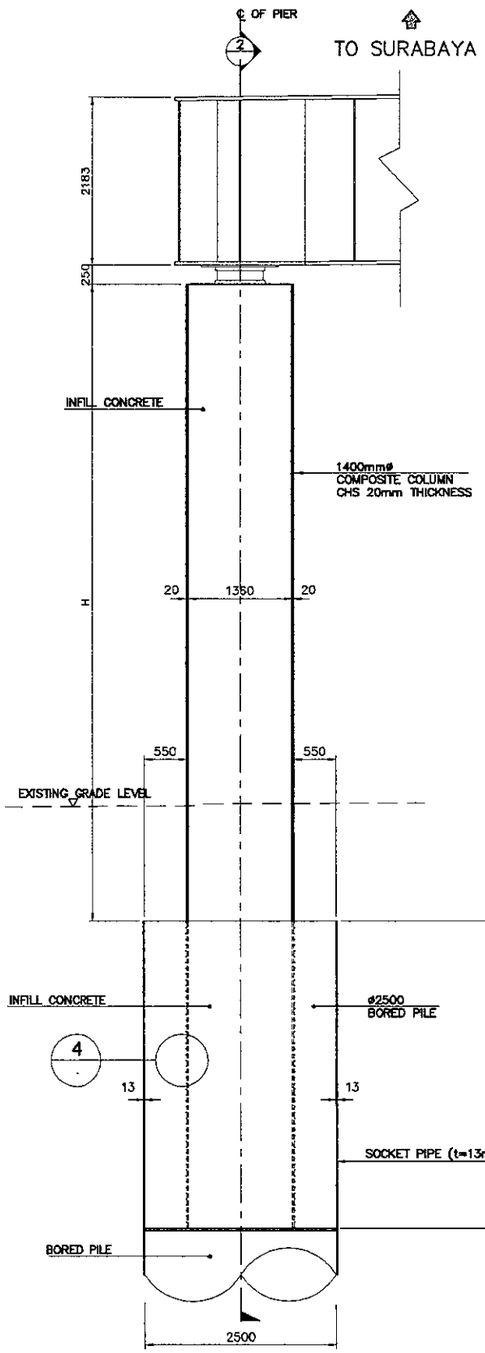


1 ELEVATION
SCALE 1:80

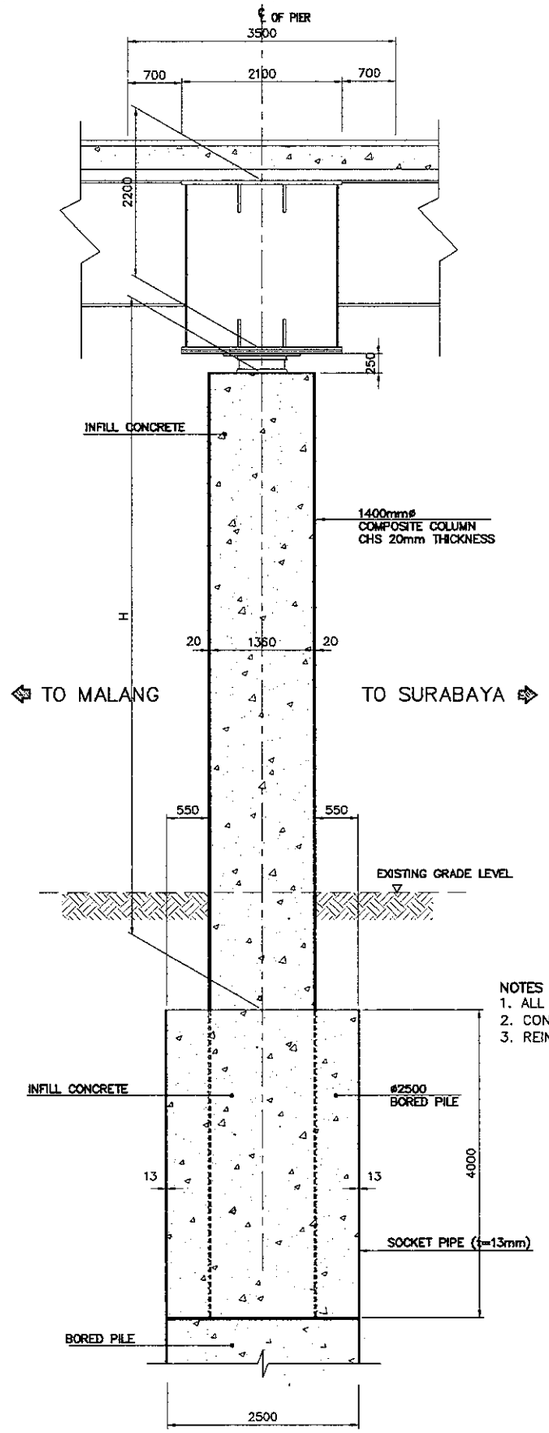


2 SECTION
SCALE 1:80

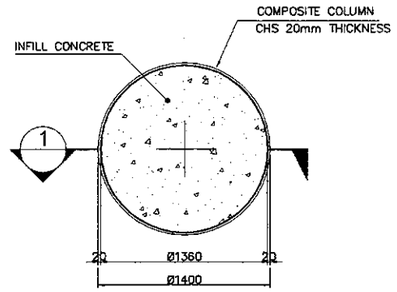


3 SECTION
SCALE 1:50

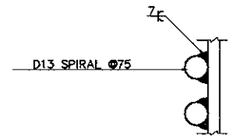


4 DETAIL
SCALE 1:10

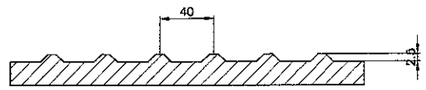


5 INNER RIB DETAIL
NOT TO SCALE

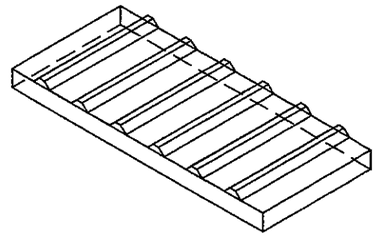

ISOMETRIC VIEW

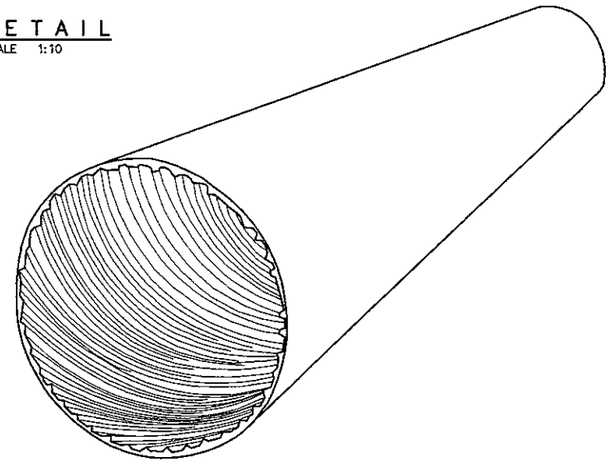

ISOMETRIC VIEW

NOTES :
1. ALL DIMENSIONS ARE IN MILLIMETERS
2. CONCRETE : fc' = 30 MPa
3. REINFORCING STEEL : YIELD STRENGTH = 390 N/mm2

## BAR BENDING DIAGRAM

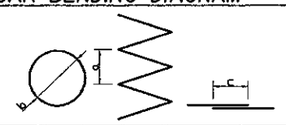


## SCHEDULE OF REINFORCEMENT

| LOCATION | BAR MARK | SIZE (mm) | BEND TYPE | DIMENSION(mm) OUT TO OUT a | b | c | d | e | f | LENGTH (mm) | NO. REQ'D. | UNIT WEIGHT (kg/m) | WEIGHT (kg) |
|---|---|---|---|---|---|---|---|---|---|---|---|---|---|
| PIER P4 & P5 | | 13 | – | 75 | 1400 | 450 | | | | 248032 | 1 | 1.04 | 258 |
| | | | | | | | | | | | | | |
| | | | | | | | | | | | | | |
| | | | | | | | | | | TOTAL WEIGHT / COLUMN = 258 Kgs. | | | |

| CONCRETE VOLUME (M3) | |
|---|---|
| P4 | 17.868 |
| P5 | 17.868 |

| PIER NO. | DIMENSION(mm) OUT TO OUT NO. OF PCS. | HEIGHT (H) | DIAMETER (MM)* | THICKNESS (MM) | TOTAL LENGTH | REMARKS |
|---|---|---|---|---|---|---|
| P4 | 2 | 8300 | 1400 | 20 | 12300 | CORRUGATED |
| P5 | 2 | 8300 | 1400 | 20 | 12300 | CORRUGATED |

* OUTSIDE DIAMETER OF COMPOSITE COLUMN

COMPOSITE COLUMN CASING DETAIL (P4 & P5)
SCALE AS SHOWN

PRINTED: OCT. 18, 2006

| JICA JAPAN INTERNATIONAL COOPERATION AGENCY / KEI KATAHIRA & ENGINEERS INTERNATIONAL | DESIGNED BY | CHECKED BY | SUBMITTED BY | REPUBLIC OF INDONESIA MINISTRY OF PUBLIC WORKS DIRECTORATE GENERAL OF HIGHWAYS | PROJECT AND LOCATION : | SCALE : | DRAWING TITLE : | DRAWING NO : |
|---|---|---|---|---|---|---|---|---|
| | Name: A. GOURLEY | Name: T. OKUMURA | Name: M. KIUCHI | | DETAILED DESIGN STUDY OF NORTH JAVA CORRIDOR FLYOVER PROJECT TANGGULANGIN FLYOVER - CONTRACT PACKAGE 3 ( PETERONGAN - TANGGULANGIN ) EAST JAVA PROVINCE | 1 : 10<br>1 : 50<br>1 : 80 | COMPOSITE COLUMN CASING DETAIL ( P6 ) | TSB-034 |
| | Sign | Sign | Sign | APPROVED BY: Ir. HERRY VAZA M.Eng.Sc NIP. : 110038400 | | FULL SIZE A3 | | SHEET NO : 34 / 45 |
| | Date | Date | Date | Sign / Date | | | | |

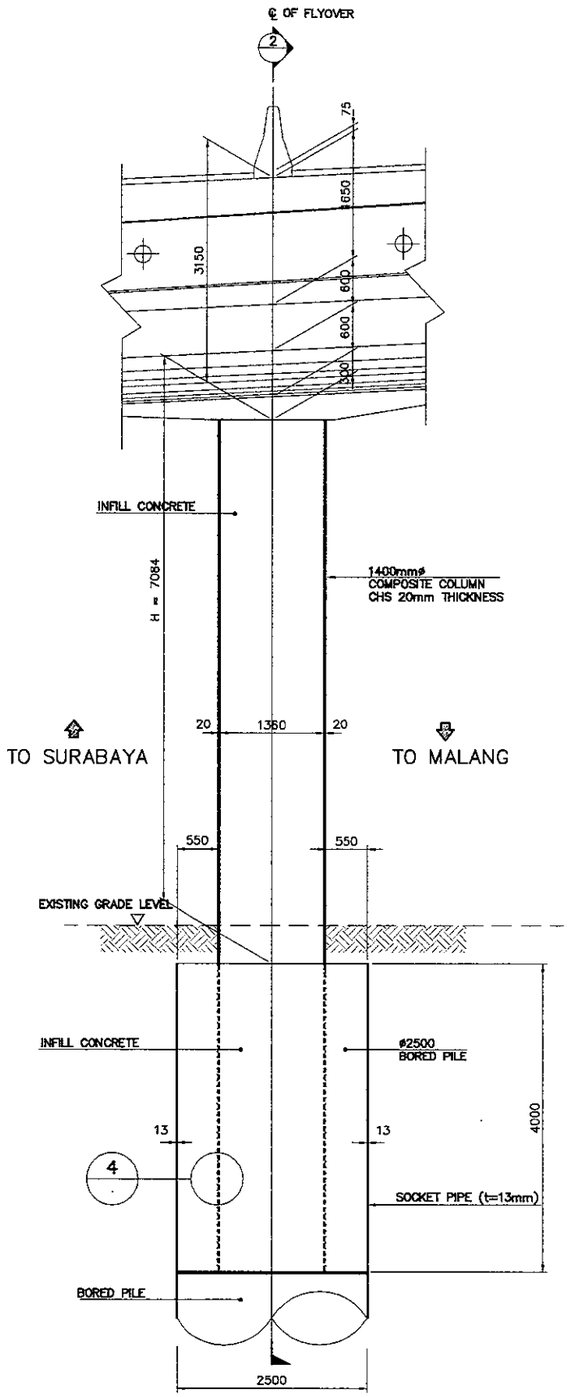


1 ELEVATION
SCALE 1:80

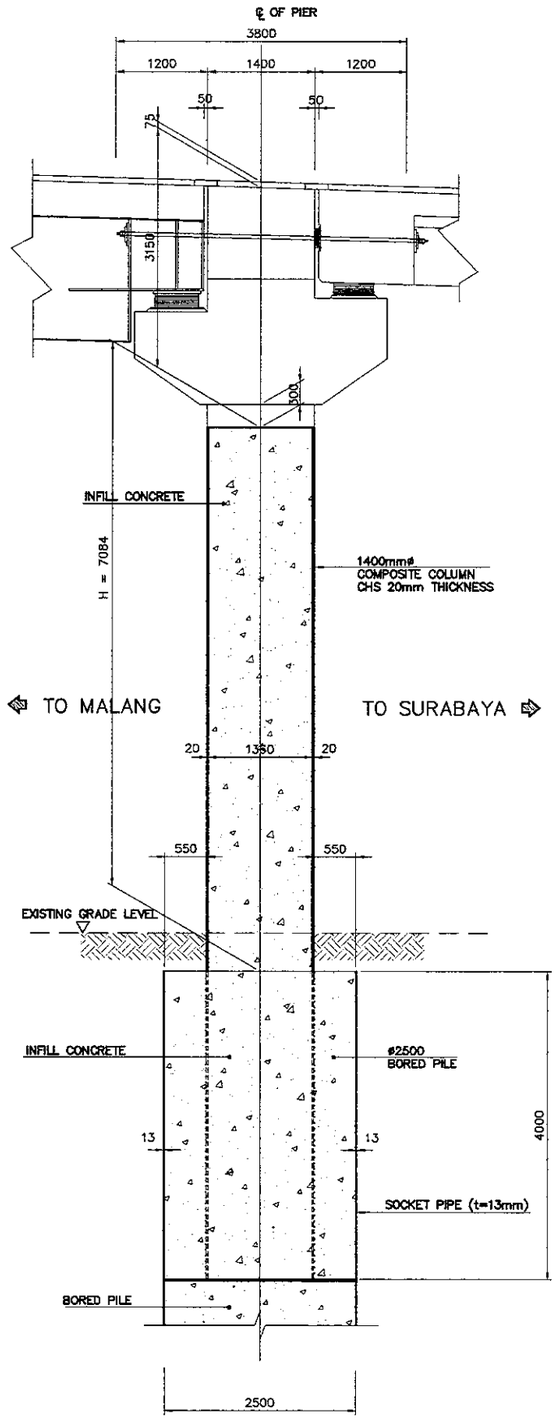


2 SECTION
SCALE 1:80

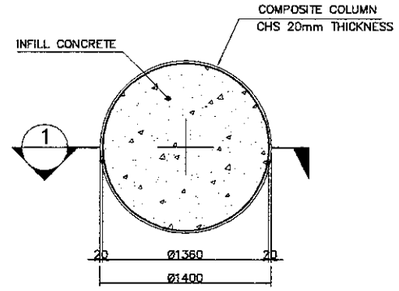


3 SECTION
SCALE 1:50

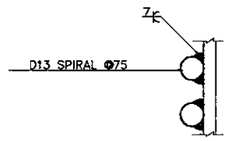


4 DETAIL
SCALE 1:10

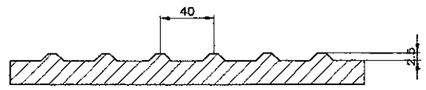


5 INNER RIB DETAIL
NOT TO SCALE

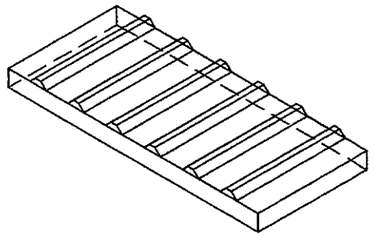

ISOMETRIC VIEW

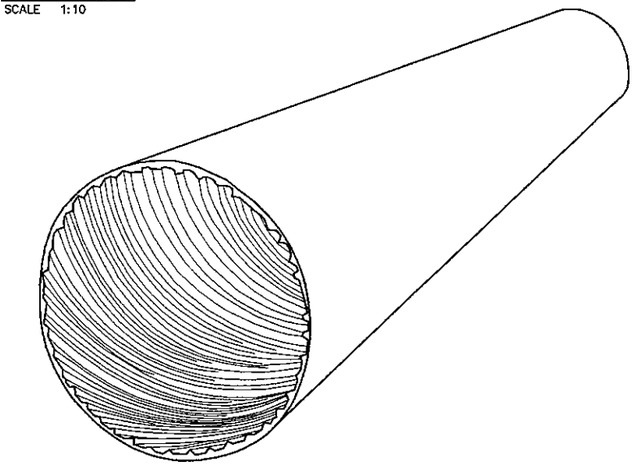

ISOMETRIC VIEW

NOTES :
1. ALL DIMENSIONS ARE IN MILLIMETERS
2. CONCRETE : fc' = 30 MPa
3. REINFORCING STEEL : YIELD STRENGTH = 390 N/mm2

## BAR BENDING DIAGRAM

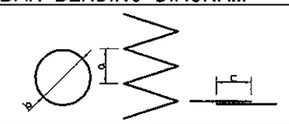


## SCHEDULE OF REINFORCEMENT

| LOCATION | BAR MARK | SIZE (mm) | BEND TYPE | DIMENSION(mm) OUT TO OUT a | b | c | d | e | f | LENGTH (mm) | NO. REQ'D. | UNIT WEIGHT (kg/m) | WEIGHT (kg) |
|---|---|---|---|---|---|---|---|---|---|---|---|---|---|
| PIER P6 | | 13 | – | 75 | 1400 | 450 | | | | 248032 | 1 | 1.04 | 258 |
| | | | | | | | | | | TOTAL WEIGHT / COLUMN = 258 Kgs. | | | |

| CONCRETE VOLUME (M3) | |
|---|---|
| P6 | 16.101 |

| PIER NO. | DIMENSION(mm) OUT TO OUT NO. OF PCS. | HEIGHT (H) | DIAMETER (MM)* | THICKNESS (MM) | TOTAL LENGTH | REMARKS |
|---|---|---|---|---|---|---|
| P6 | 1 | 7084 | 1400 | 20 | 11084 | CORRUGATED |

* OUTSIDE DIAMETER OF COMPOSITE COLUMN

COMPOSITE COLUMN CASING DETAIL (P6)
SCALE AS SHOWN

PRINTED: OCT. 18, 2006

| JAPAN INTERNATIONAL COOPERATION AGENCY<br>KATAHIRA & ENGINEERS INTERNATIONAL | DESIGNED BY | CHECKED BY | SUBMITTED BY | REPUBLIC OF INDONESIA<br>MINISTRY OF PUBLIC WORKS<br>DIRECTORATE GENERAL OF HIGHWAYS | PROJECT AND LOCATION : | SCALE : | DRAWING TITLE : | DRAWING NO : |
|---|---|---|---|---|---|---|---|---|
| | Name A. GOURLEY | Name T. OKUMURA | Name M. KIUCHI | | DETAILED DESIGN STUDY OF<br>NORTH JAVA CORRIDOR FLYOVER PROJECT<br>TANGGULANGIN FLYOVER - CONTRACT PACKAGE 3<br>( PETERONGAN -TANGGULANGIN )<br>EAST JAVA PROVINCE | 1 : 10<br>1 : 50 | COMPOSITE COLUMN SOCKET TYPE CONNECTION<br>(PIER P3) | TSB-035 |
| | Sign | Sign | Sign | APPROVED BY Ir. HERRY VAZA M,Eng.Sc<br>NIP. : 110038400 Sign | | FULL SIZE A3 | | SHEET NO : 35 / 45 |
| | Date | Date | Date | Date | | | | |

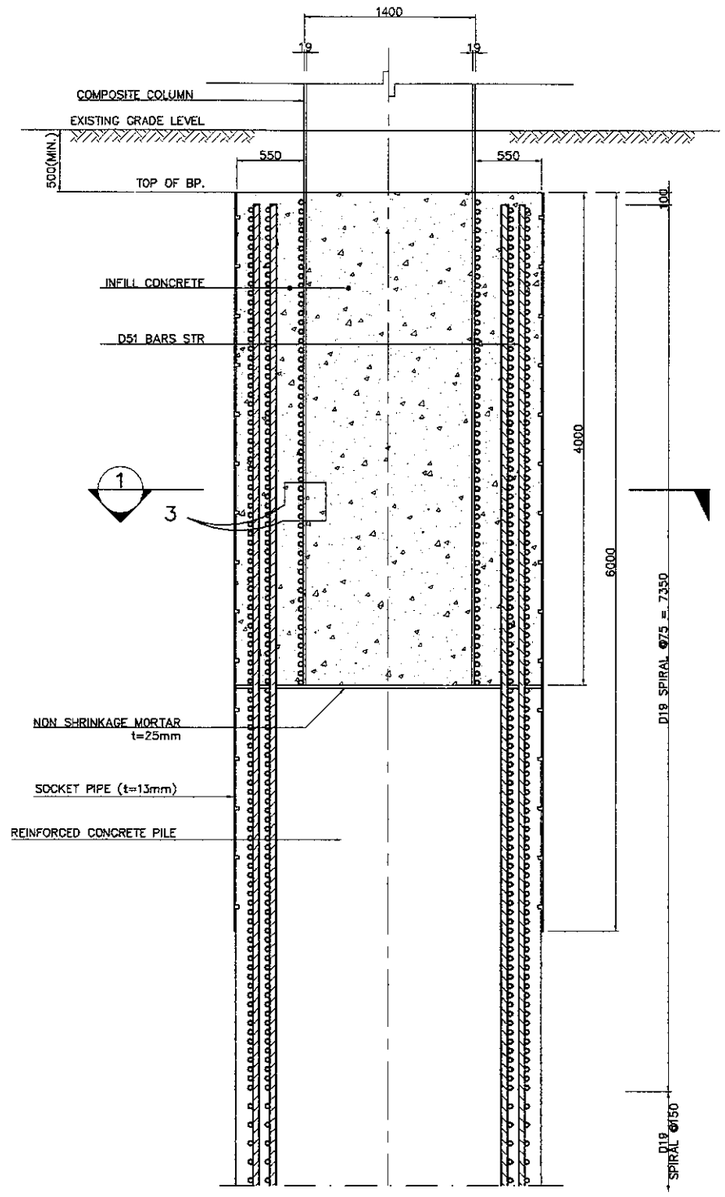


A SECTION
SCALE 1:50

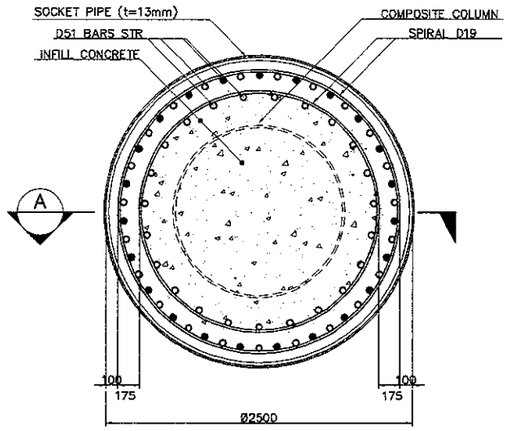


1 SECTION
SCALE 1:50

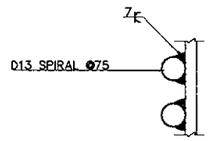


3 DETAIL
SCALE 1:10

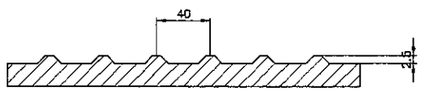


4 INNER RIB DETAIL
NOT TO SCALE

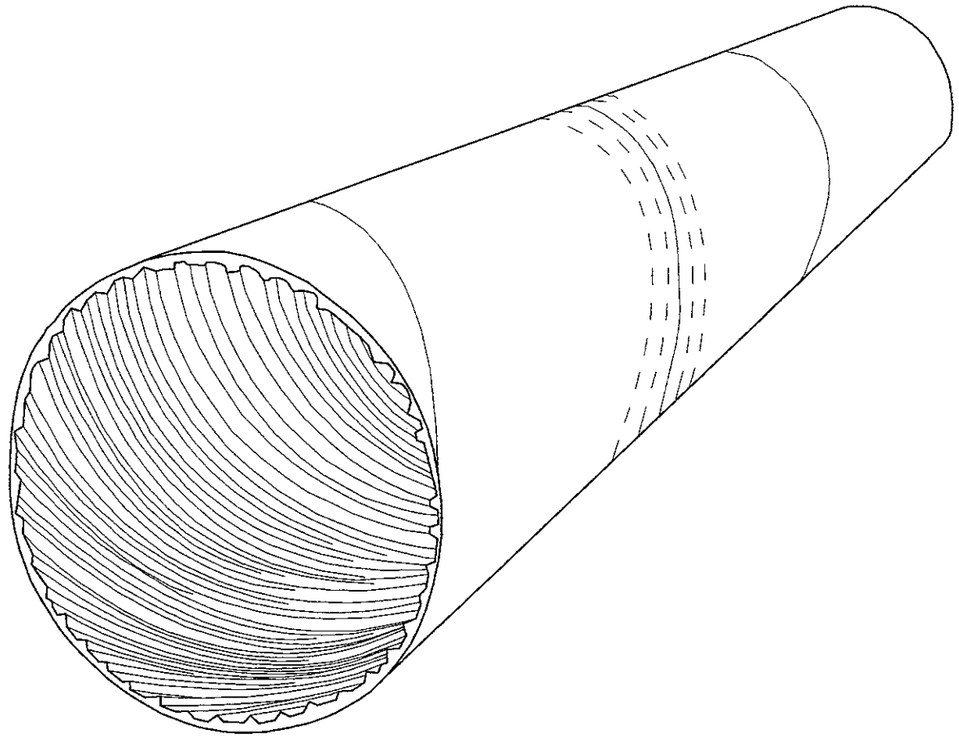

ISOMETRIC VIEW

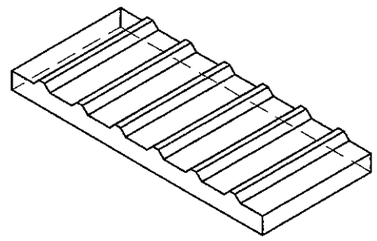

ISOMETRIC VIEW

| PIER NO. | DIMENSION(mm) OUT TO OUT | | | | REMARKS |
|---|---|---|---|---|---|
| | NO. OF PCS. | LENGTH (M) | DIAMETER (MM)* | THICKNESS (MM) | |
| P3 | 1 | 6 | 2500 | 13 | CORRUGATED |
| | | | | | |
| | | | | | |

* OUTSIDE DIAMETER OF CONCRETE PILE CAST-IN DRILLED HOLE

NOTES :
1. ALL DIMENSION ARE IN MILIMETERS.

COMPOSITE COLUMN SOCKET TYPE CONNECTION (PIER P3)
SCALE AS SHOWN

PRINTED: OCT. 18, 2006

| JAPAN INTERNATIONAL COOPERATION AGENCY<br>KATAHIRA & ENGINEERS INTERNATIONAL | DESIGNED BY | CHECKED BY | SUBMITTED BY | REPUBLIC OF INDONESIA<br>MINISTRY OF PUBLIC WORKS<br>DIRECTORATE GENERAL OF HIGHWAYS | PROJECT AND LOCATION : | SCALE : | DRAWING TITLE : | DRAWING NO : |
|---|---|---|---|---|---|---|---|---|
| | Name A. GOURLEY | Name T. OKUMURA | Name M. KIUCHI | | DETAILED DESIGN STUDY OF<br>NORTH JAVA CORRIDOR FLYOVER PROJECT<br>TANGGULANGIN FLYOVER - CONTRACT PACKAGE 3<br>( PETERONGAN -TANGGULANGIN )<br>EAST JAVA PROVINCE | 1 : 10<br>1 : 50 | COMPOSITE COLUMN SOCKET TYPE CONNECTION<br>(PIER P4, P5, P6) | TSB-036 |
| | Sign | Sign | Sign | APPROVED BY Ir. HERRY VAZA M,Eng.Sc | | | | SHEET NO : |
| | Date | Date | Date | NIP. : 110038400 Sign / Date | | FULL SIZE A3 | | 36 / 45 |

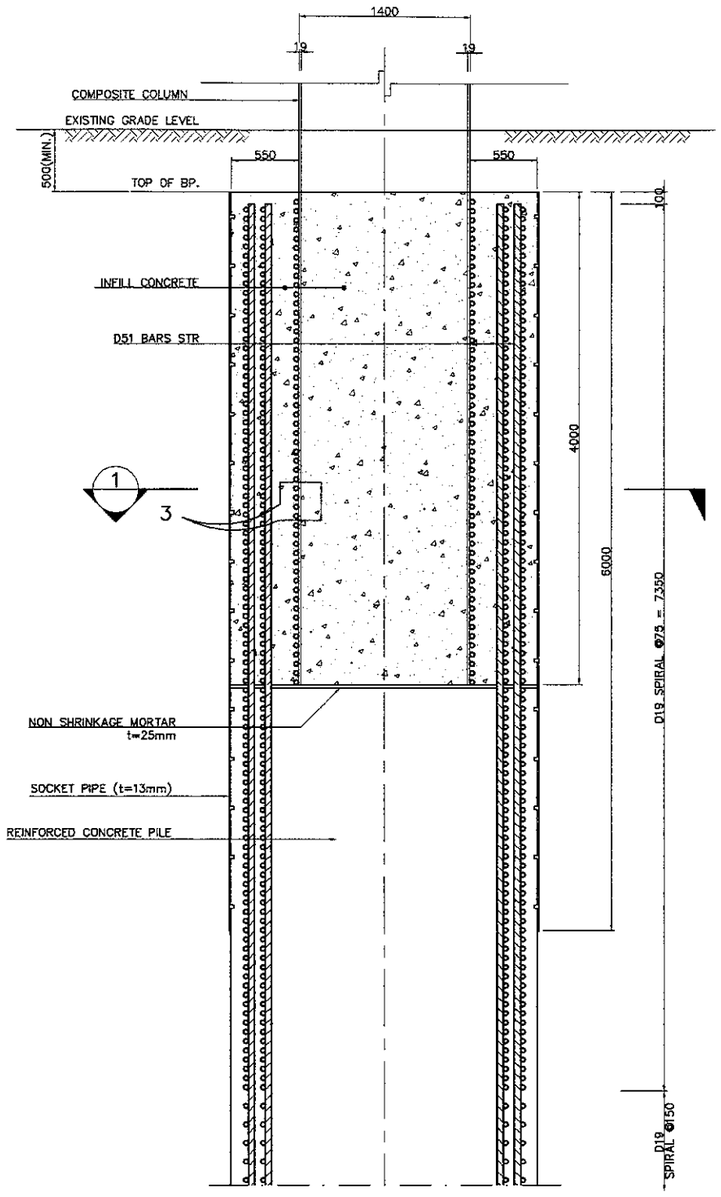


A SECTION
SCALE 1:50

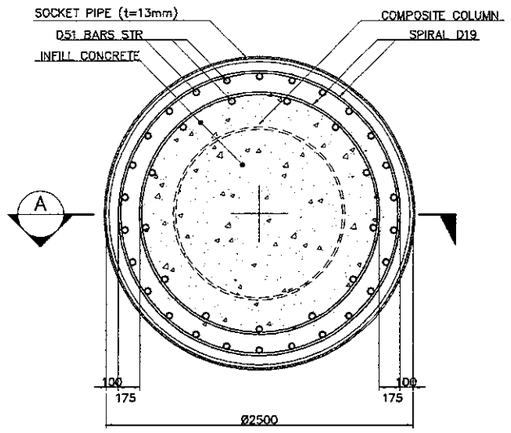


1 SECTION
SCALE 1:50

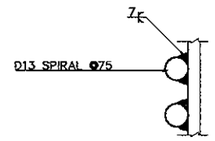


3 DETAIL
SCALE 1:10

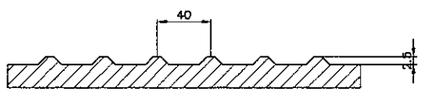


4 INNER RIB DETAIL
NOT TO SCALE

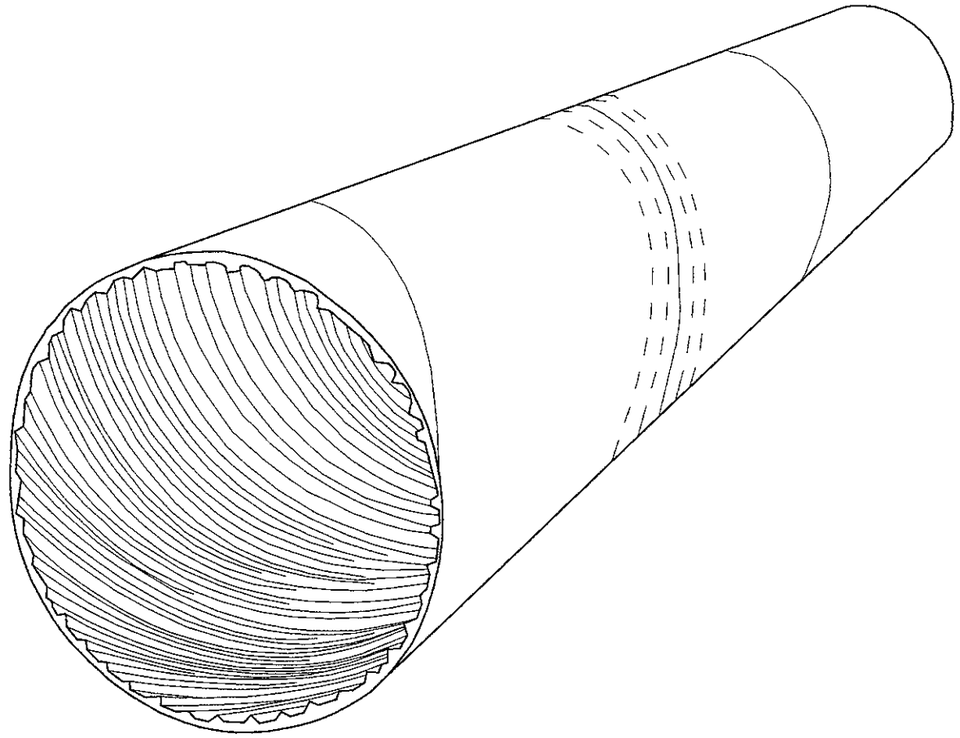

ISOMETRIC VIEW

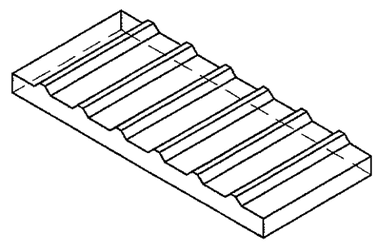

ISOMETRIC VIEW

| PIER NO. | DIMENSION(mm) OUT TO OUT | | | | REMARKS |
|---|---|---|---|---|---|
| | NO. OF PCS. | LENGTH (M) | DIAMETER (MM)* | THICKNESS (MM) | |
| P4 | 1 | 6 | 2500 | 13 | CORRUGATED |
| P5 | 1 | 6 | 2500 | 13 | CORRUGATED |
| P6 | 1 | 6 | 2500 | 13 | CORRUGATED |

* OUTSIDE DIAMETER OF CONCRETE PILE CAST-IN DRILLED HOLE

NOTES :
1. ALL DIMENSION ARE IN MILIMETERS.

COMPOSITE COLUMN SOCKET TYPE CONNECTION (PIER P4, P5, P6)
SCALE AS SHOWN

PRINTED: OCT. 18, 2006

| JAPAN INTERNATIONAL COOPERATION AGENCY<br>KATAHIRA & ENGINEERS INTERNATIONAL | DESIGNED BY | CHECKED BY | SUBMITTED BY | REPUBLIC OF INDONESIA<br>MINISTRY OF PUBLIC WORKS<br>DIRECTORATE GENERAL OF HIGHWAYS | PROJECT AND LOCATION : | SCALE : | DRAWING TITLE : | DRAWING NO : |
|---|---|---|---|---|---|---|---|---|
| | Name: A. GOURLEY | Name: T. OKUMURA | Name: M. KIUCHI | | DETAILED DESIGN STUDY OF<br>NORTH JAVA CORRIDOR FLYOVER PROJECT<br>TANGGULANGIN FLYOVER - CONTRACT PACKAGE 3<br>( PETERONGAN -TANGGULANGIN )<br>EAST JAVA PROVINCE | 1 : 50<br>1 : 100<br>FULL SIZE A3 | **BORED PILE REINF. DETAILS**<br>(PIER P1, P2) | TSB-037 |
| | Sign | Sign | Sign | APPROVED BY: Ir. HERRY VAZA M,Eng.Sc<br>NIP. : 110038400 | | | | SHEET NO : 37 / 45 |
| | Date | Date | Date | Sign / Date | | | | |

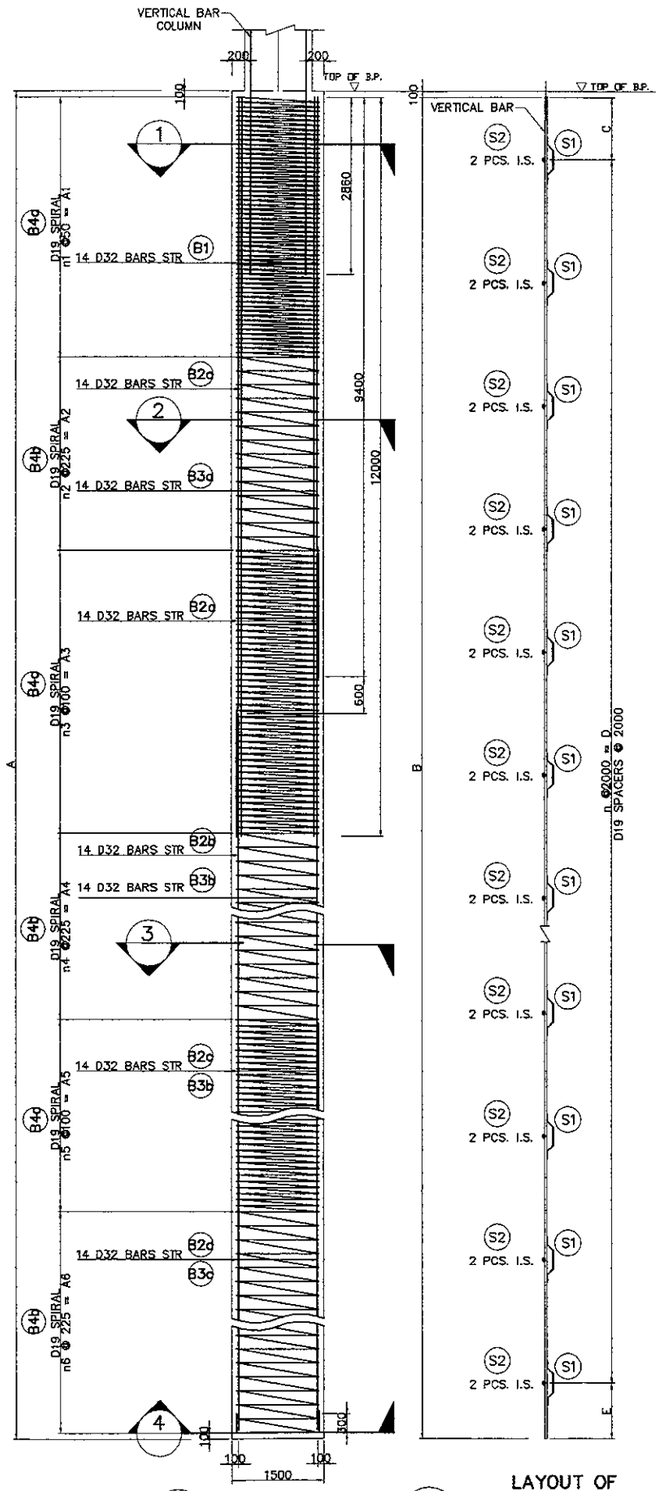


A SECTION
SCALE 1:100




B LAYOUT OF STIFFENER/SPACER
SCALE 1:100

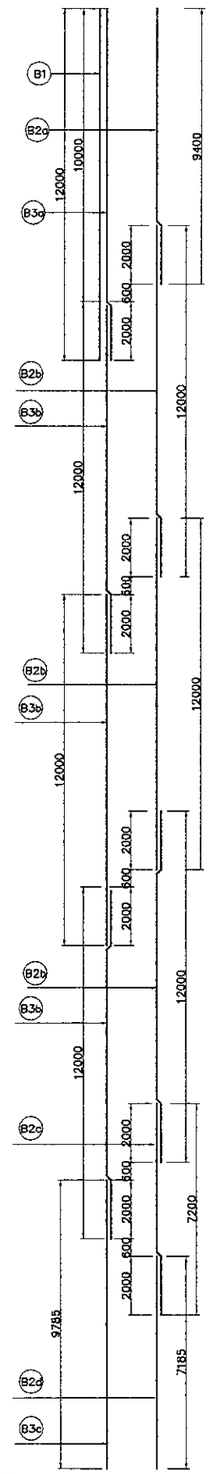

F SCHEMATIC DETAIL
NOT TO SCALE

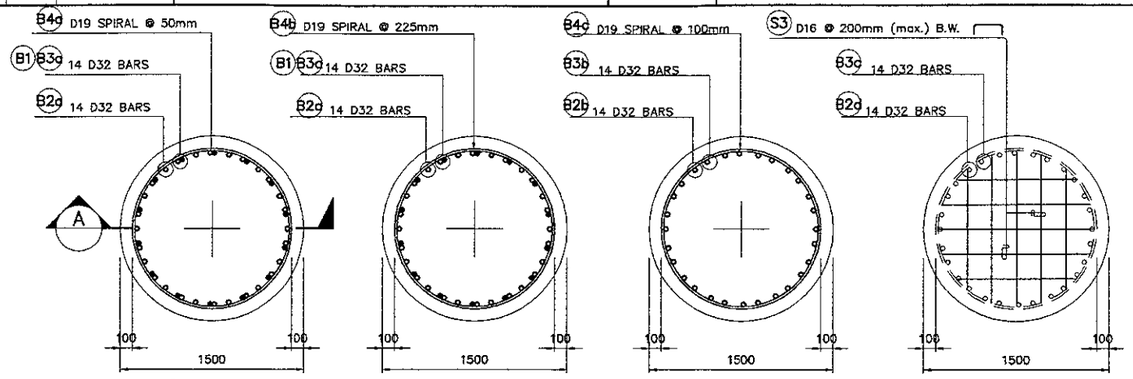


1 SECTION
SCALE 1:50

2 SECTION
SCALE 1:50

3 SECTION
SCALE 1:50

4 SECTION
SCALE 1:50

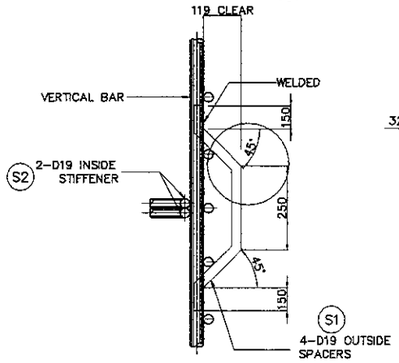


C DETAIL OF STIFFENER/SPACER
NOT TO SCALE

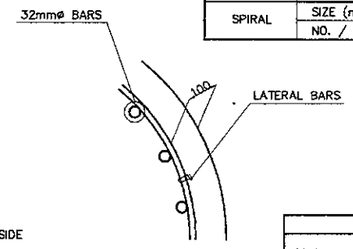


E TYPICAL BAR LAYOUT DETAIL
NOT TO SCALE

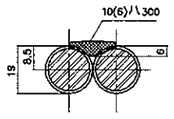


SECTION-D1
SINGLE FLARED-V-GROOVE WELD

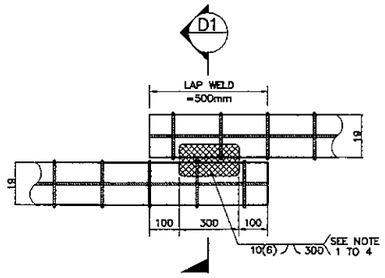


DIRECT LAP JOINT WITH BARS IN CONTACT

D DETAIL OF SPIRAL REINF. FULL LAP-WELD CONNECTION
NOT TO SCALE

| BORED PILE TYPE | | – |
|---|---|---|
| SIZE (mm) | | D1500 |
| MAIN BARS | SIZE (mm) | 32 |
| | NO. OF LAYERS | 1.0 |
| | NO. OF PCS. | 42 |
| SPIRAL | SIZE (mm) | 19 |
| | NO. / SET | |

**NOTES ON LAP-WELD CONNECTION :**

1. SPIRAL REINFORCEMENT ARE LAP-WELD CONNECTED (FLARED-V-GROOVE TYPE)
2. WELDING SHOULD CONFORM TO AWS (D1.4) *STRUCTURAL WELDING CODE REINFORCED STEEL*
3. USE ELECTRODE E90XX.
4. CARE SHOULD BE TAKEN NOT TO DAMAGE THE COLUMN MAIN BARS DURING WELDING.

**NOTES :**

1. ALL DIMENSIONS ARE IN MILIMETERS.
2. BORED PILE MAIN BARS ARE PROVIDED WITHOUT ANY SPLICE. HOWEVER SPLICING OF MAIN BARS BY MECHANICAL COUPLERS ARE ALLOWED WITH PERMISSION FROM THE STRUCTURAL ENGINEER.
3. CONCRETE : Fc' = 30MPa
4. REINFORCING STEEL=
   DS1 : YIELD STRENGTH = 345 N/mm2
   OTHERS : YIELD STRENGTH = 390 N/mm2

| LOCATION | DIMENSION A (mm) | B (mm) | C (mm) | D (mm) | E (mm) | n |
|---|---|---|---|---|---|---|
| P1, P2 | 50000 | 49900 | 1000 | 48000 | 900 | 24 |

| LOCATION | DIMENSION A1 (mm) | A2 (mm) | A3 (mm) | A4 (mm) | A5 (mm) | A6 (mm) | n1 | n2 | n3 | n4 | n5 | n6 |
|---|---|---|---|---|---|---|---|---|---|---|---|---|
| P1, P2 | 4200 | 3150 | 4600 | 5400 | 7500 | 4950 | 60 | 14 | 46 | 24 | 75 | 22 |

**BAR BENDING DIAGRAM**

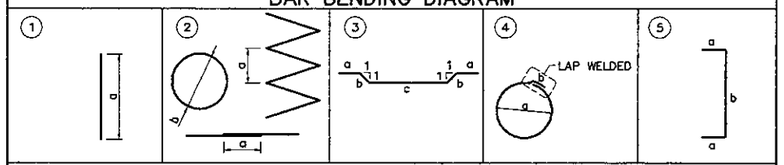


**SCHEDULE OF REINFORCEMENT**

| LOCATION | BAR MARK | SIZE (mm) | BEND TYPE | DIMENSION(mm) OUT TO OUT a | b | c | d | e | f | LENGTH (mm) | NO. REQ'D. | UNIT WEIGHT (kg/m) | WEIGHT (kg) |
|---|---|---|---|---|---|---|---|---|---|---|---|---|---|
| PIER P1, P2 DIA. = 1500 mm L = 50000 mm | B1 | 32 | 1 | 12000 | | | | | | 12000 | 14 | 6.31 | 1060 |
| | B2a | 32 | 1 | 9400 | | | | | | 9400 | 14 | 6.31 | 830 |
| | B2b | 32 | 1 | 12000 | | | | | | 12000 | 42 | 6.31 | 3180 |
| | B2c | 32 | 1 | 7200 | | | | | | 7200 | 14 | 6.31 | 636 |
| | B2d | 32 | 1 | 7185 | | | | | | 7185 | 14 | 6.31 | 635 |
| | B3a | 32 | 1 | 12000 | | | | | | 12000 | 14 | 6.31 | 1060 |
| | B3b | 32 | 1 | 12000 | | | | | | 12000 | 42 | 6.31 | 3180 |
| | B3c | 32 | 1 | 9785 | | | | | | 9785 | 14 | 6.31 | 864 |
| | B4a | 19 | 2 | 50 | 1300 | 500 | | | | 255420 | 1 | 2.23 | 570 |
| | B4b | 19 | 2 | 225 | 1300 | 500 | | | | 75648 | 1 | 2.23 | 169 |
| | B4c | 19 | 2 | 100 | 1300 | 500 | | | | 599816 | 1 | 2.23 | 1338 |
| | S1 | 19 | 3 | 150 | 170 | 250 | | | | 890 | 100 | 2.23 | 198 |
| | S2 | 19 | 4 | 1216 | 170 | | | | | 7806 | 50 | 2.23 | 870 |
| | S3 | 16 | 5 | 150 | 1865 | | | | | 2165 | 10 | 1.58 | 34 |
| | | | | | | | | | | TOTAL WEIGHT / PILE = 14,625 Kgs. | | | |
| | | | | | | | | | | TOTAL VOLUME FOR BOREPILES = 88.36 Cu.m | | | |

THE SCHEDULE OF REINFORCEMENT SHOWN ON THE BAR BENDING DIAGRAM TABLE IS FOR REFERENCE ONLY. THE CONTRACTOR SHOULD CHECK AND VERIFY ALL DIMENSIONS, SIZES AND QUANTITIES OF REINFORCEMENT.

BORED PILE REINFORCEMENT DETAIL ( PIER P1, P2 )
SCALE AS SHOWN

PRINTED: OCT. 18, 2006

| JAPAN INTERNATIONAL COOPERATION AGENCY<br>KATAHIRA & ENGINEERS INTERNATIONAL | DESIGNED BY | CHECKED BY | SUBMITTED BY | REPUBLIC OF INDONESIA<br>MINISTRY OF PUBLIC WORKS<br>DIRECTORATE GENERAL OF HIGHWAYS | PROJECT AND LOCATION : | SCALE : | DRAWING TITLE : | DRAWING NO : |
|---|---|---|---|---|---|---|---|---|
| | Name: A. GOURLEY | Name: T. OKUMURA | Name: M. KIUCHI | | DETAILED DESIGN STUDY OF<br>NORTH JAVA CORRIDOR FLYOVER PROJECT<br>TANGGULANGIN FLYOVER - CONTRACT PACKAGE 3<br>( PETERONGAN -TANGGULANGIN )<br>EAST JAVA PROVINCE | 1 : 50<br>1 : 100 | **BORED PILE REINF. DETAILS**<br>(PIER P3) | TSB-038 |
| | Sign | Sign | Sign | APPROVED BY: Ir. HERRY VAZA M,Eng.Sc | | | | SHEET NO : |
| | Date | Date | Date | NIP. : 110038400 — Sign / Date | | FULL SIZE A3 | | 38 / 45 |

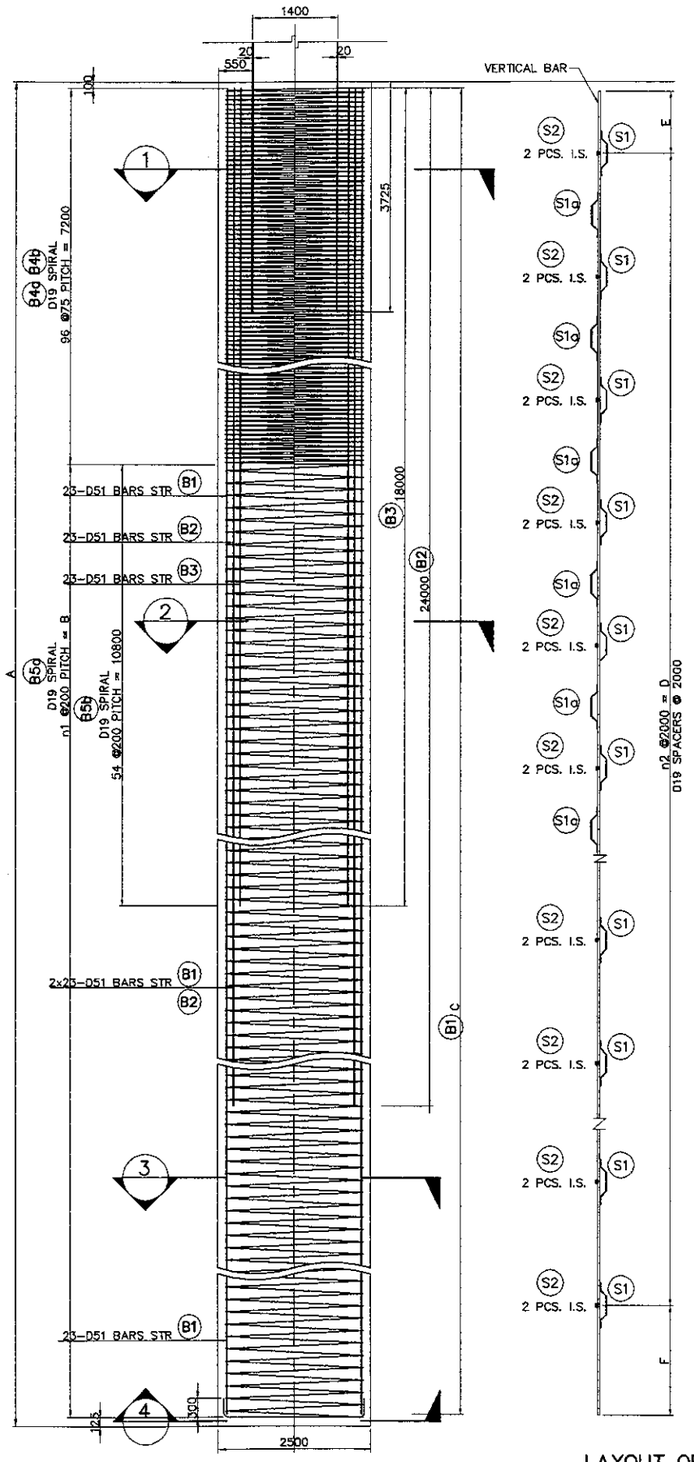


A SECTION
SCALE 1:100

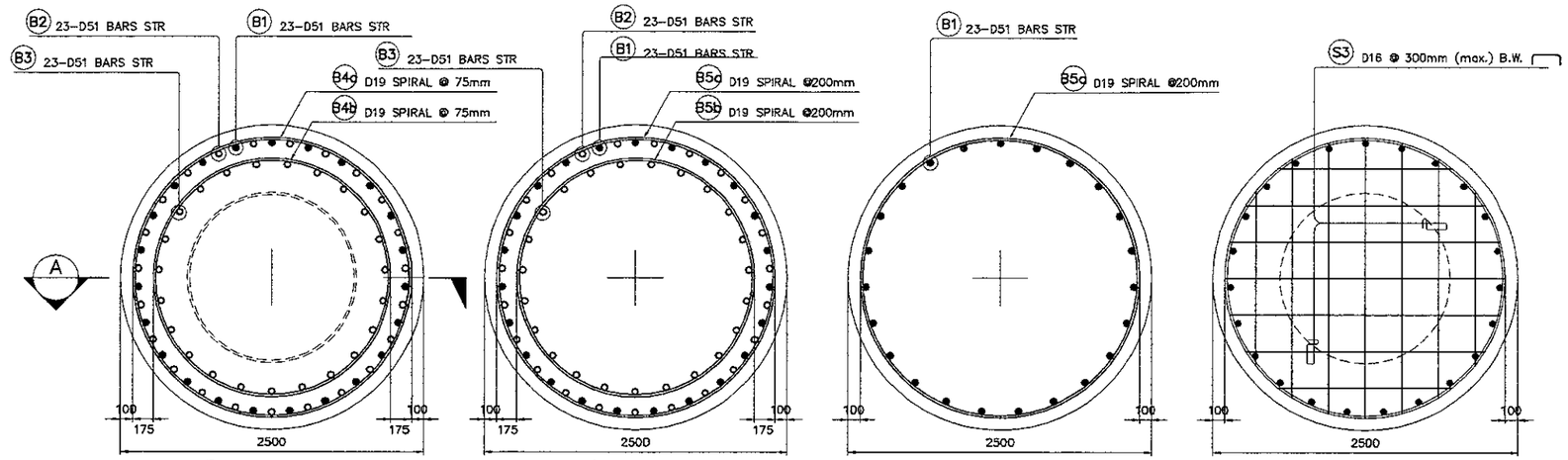


1 SECTION
SCALE 1:50

2 SECTION
SCALE 1:50

3 SECTION
SCALE 1:50

4 SECTION
SCALE 1:50

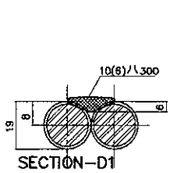


SECTION–D1
SINGLE FLARED–V–GROOVE WELD

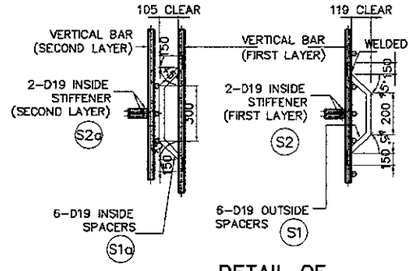


C DETAIL OF STIFFENER/SPACER
NOT TO SCALE

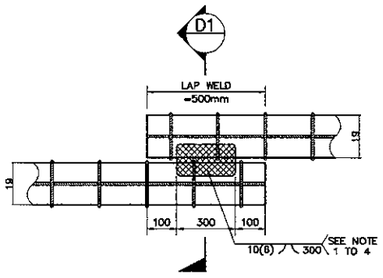


DIRECT LAP JOINT WITH BARS IN CONTACT

D DETAIL OF SPIRAL REINF. FULL LAP–WELD CONNECTION
NOT TO SCALE

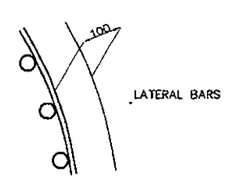


E TYPICAL BAR LAYOUT DETAIL
NOT TO SCALE

| BORED PILE TYPE | | BP–TF2 |
|---|---|---|
| SIZE (mm) | | D2500 |
| MAIN BARS | SIZE (mm) | 51 |
| | NO. OF LAYERS | 2.0 |
| | NO. OF PCS. (1) | 46 |
| | NO. OF PCS. (2) | 23 |
| SPIRAL | SIZE (mm) | 19 |
| | NO. / SET | |

| LOCATION | DIMENSION A (mm) | B (mm) | C (mm) | D (mm) | E (mm) | F (mm) | n1 | n2 S1 | n2 S1a |
|---|---|---|---|---|---|---|---|---|---|
| P3 | 55000 | 47800 | 54800 | 52000 | 1000 | 1800 | 238 | 26 | 8 |

NOTES :
1. ALL DIMENSIONS ARE IN MILIMETERS.
2. BORED PILE MAIN BARS ARE PROVIDED WITHOUT ANY SPLICE. HOWEVER SPLICING OF MAIN BARS BY MECHANICAL COUPLERS ARE ALLOWED WITH PERMISSION FROM THE STRUCTURAL ENGINEER.
3. COMPOSITE COLUMN SOCKET TYPE CONNECTION SEE DWG. NO. TSB–035
4. CONCRETE : fc' = 30MPa
5. REINFORCING STEEL= D51 : YIELD STRENGTH = 345 N/mm2
   OTHERS : YIELD STRENGTH = 390 N/mm2

NOTES ON LAP–WELD CONNECTION :
1. SPIRAL REINFORCEMENT ARE LAP–WELD CONNECTED (FLARED–V–GROOVE TYPE)
2. WELDING SHOULD CONFORM TO AWS (D1.4) *STRUCTURAL WELDING CODE REINFORCED STEEL*
3. USE ELECTRODE E90XX.
4. CARE SHOULD BE TAKEN NOT TO DAMAGE THE COLUMN MAIN BARS DURING WELDING.

B LAYOUT OF STIFFENER/SPACER
SCALE 1:100

## BAR BENDING DIAGRAM

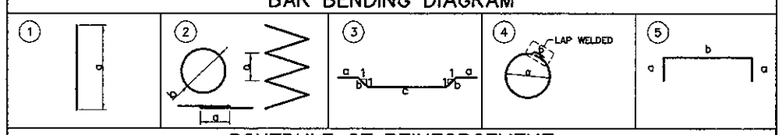


## SCHEDULE OF REINFORCEMENT

| LOCATION | BAR MARK | SIZE (mm) | BEND TYPE | DIMENSION(mm) OUT TO OUT a | b | c | d | e | f | LENGTH (mm) | NO. REQ'D. | UNIT WEIGHT (kg/m) | WEIGHT (kg) |
|---|---|---|---|---|---|---|---|---|---|---|---|---|---|
| PIER P3, DIA = 2500 mm L = 56000 mm | B1 | 51 | 1 | 54800 | | | | | | 54800 | 23 | 15.90 | 20040 |
| | B2 | 51 | 1 | 24000 | | | | | | 24000 | 23 | 15.90 | 8777 |
| | B3 | 51 | 1 | 18000 | | | | | | 18000 | 23 | 15.90 | 6583 |
| | B84a | 19 | 2 | 75 | 2300 | 500 | | | | 722312 | 1 | 2.23 | 1611 |
| | B84b | 19 | 2 | 75 | 2058 | 500 | | | | 955545 | 1 | 2.23 | 2131 |
| | B85a | 19 | 2 | 200 | 2300 | 500 | | | | 1790836 | 1 | 2.23 | 3994 |
| | B85b | 19 | 2 | 200 | 2058 | 500 | | | | 362954 | 1 | 2.23 | 809 |
| | S1 | 19 | 3 | 150 | 170 | 250 | | | | 890 | 162 | 2.23 | 322 |
| | S1a | 19 | 3 | 150 | 150 | 350 | | | | 950 | 48 | 2.23 | 102 |
| | S2 | 19 | 4 | 2160 | 170 | | | | | 6952 | 54 | 2.23 | 837 |
| | S2a | 19 | 4 | 1810 | 170 | | | | | 5853 | 16 | 2.23 | 209 |
| | S3 | 16 | 5 | 150 | 1979 | | | | | 2279 | 14 | 1.58 | 50 |
| | | | | | | | | | | TOTAL WEIGHT FOR / PILE = 45,464 Kgs. | | | |
| | | | | | | | | | | TOTAL VOLUME CONCRETE = 269.98 m3 | | | |

THE SCHEDULE OF REINFORCEMENT SHOWN ON THE BAR BENDING DIAGRAM TABLE IS FOR REFERENCE ONLY. THE CONTRACTOR SHOULD CHECK AND VERIFY ALL DIMENSIONS, SIZES AND QUANTITIES OF REINFORCEMENT.

BORED PILE REINF. DETAILS (PIER P3)
SCALE AS SHOWN

| JAPAN INTERNATIONAL COOPERATION AGENCY<br>KATAHIRA & ENGINEERS INTERNATIONAL | DESIGNED BY | CHECKED BY | SUBMITTED BY | REPUBLIC OF INDONESIA<br>MINISTRY OF PUBLIC WORKS<br>DIRECTORATE GENERAL OF HIGHWAYS | PROJECT AND LOCATION : | SCALE : | DRAWING TITLE : | DRAWING NO : |
|---|---|---|---|---|---|---|---|---|
| | Name: A. GOURLEY | Name: T. OKUMURA | Name: M. KIUCHI | | DETAILED DESIGN STUDY OF<br>NORTH JAVA CORRIDOR FLYOVER PROJECT<br>TANGGULANGIN FLYOVER - CONTRACT PACKAGE 3<br>( PETERONGAN -TANGGULANGIN )<br>EAST JAVA PROVINCE | 1 : 50<br>1 : 100 | BORED PILE REINF. DETAILS<br>(PIER P4, P5 & P6) | TSB-039 |
| | Sign | Sign | Sign | APPROVED BY: Ir. HERRY VAZA M,Eng.Sc<br>NIP. : 110038400 | | FULL SIZE A3 | | SHEET NO : 39 / 45 |
| | Date | Date | Date | Sign / Date | | | | |

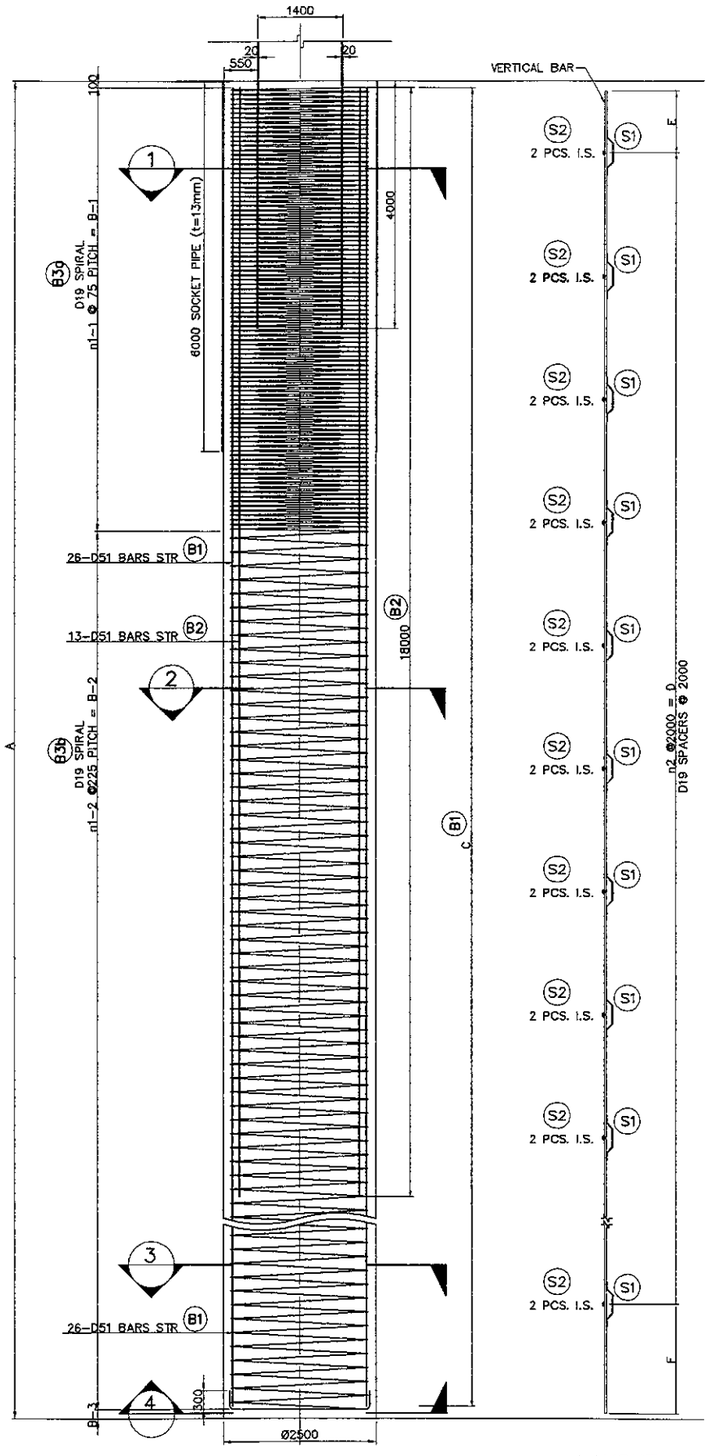


A SECTION
SCALE 1:100

B LAYOUT OF STIFFENER/SPACER
SCALE 1:100

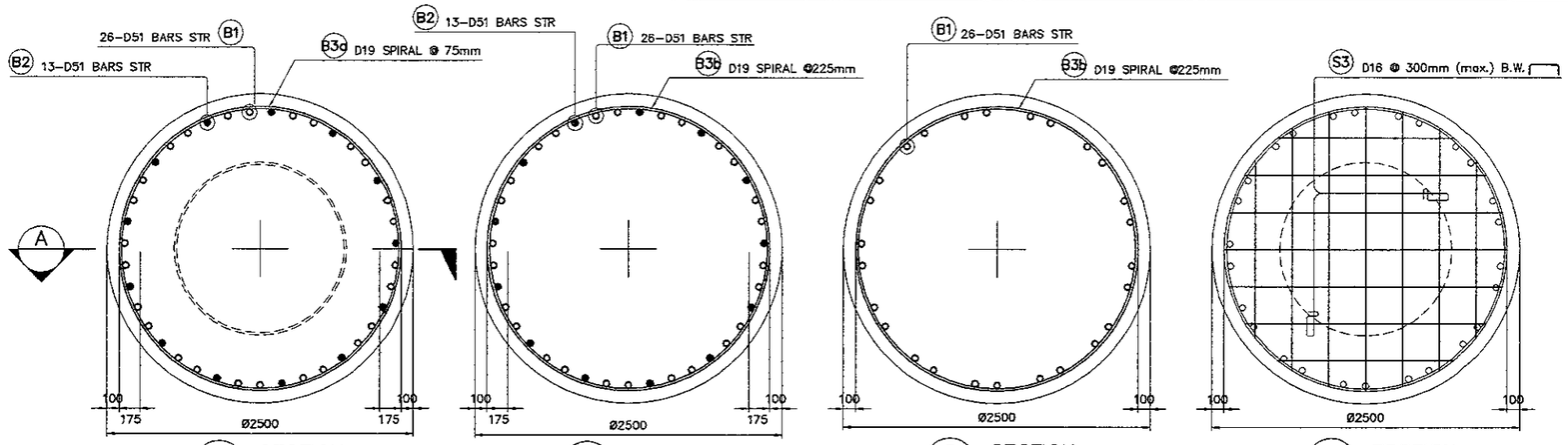


1 SECTION
SCALE 1:50

2 SECTION
SCALE 1:50

3 SECTION
SCALE 1:50

4 SECTION
SCALE 1:50

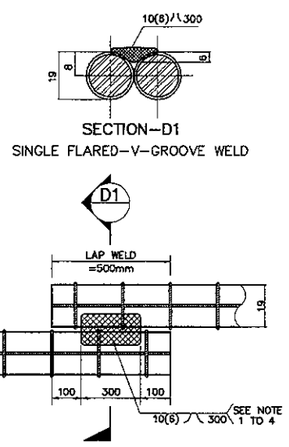


D DETAIL OF SPIRAL REINF. FULL LAP-WELD CONNECTION
NOT TO SCALE

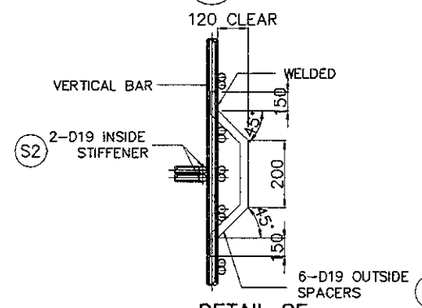


C DETAIL OF STIFFENER/SPACER
NOT TO SCALE

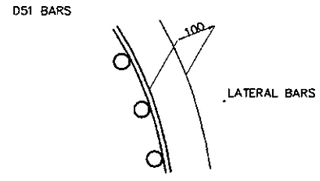


E TYPICAL BAR LAYOUT DETAIL
NOT TO SCALE

| BORED PILE TYPE | | BP- TF3 |
|---|---|---|
| SIZE (mm) | | Ø2500 |
| MAIN BARS | SIZE (mm) | 51 |
| | NO. OF LAYERS | 2.0 |
| | NO. OF PCS. (1) | 26 |
| | NO. OF PCS. (2) | 13 |
| SPIRAL | SIZE (mm) | 19 |
| | NO. / SET | |

NOTES ON LAP-WELD CONNECTION :
1. SPIRAL REINFORCEMENT ARE LAP-WELD CONNECTED (FLARED-V-GROOVE TYPE)
2. WELDING SHOULD CONFORM TO AWS (D1.4) "STRUCTURAL WELDING CODE REINFORCED STEEL."
3. USE ELECTRODE E90XX.
4. CARE SHOULD BE TAKEN NOT TO DAMAGE THE COLUMN MAIN BARS DURING WELDING.

| LOCATION | A (mm) | B-1 (mm) | B-2 (mm) | B-3 (mm) | C (mm) | D (mm) | E (mm) | F (mm) | n1-1 | n1-2 | n2 |
|---|---|---|---|---|---|---|---|---|---|---|---|
| P4 L | 48000 | 7275 | 40500 | 125 | 47775 | 46000 | 1000 | 775 | 97 | 180 | 23 |
| P4 R | 39000 | 7275 | 31500 | 125 | 38775 | 36000 | 1000 | 1775 | 97 | 140 | 18 |
| P5 L | 38000 | 7200 | 30800 | 100 | 37800 | 36000 | 1000 | 800 | 96 | 136 | 18 |
| P5 R | 62000 | 7350 | 54450 | 100 | 61800 | 60000 | 1000 | 800 | 98 | 242 | 30 |
| P6 | 45000 | 7200 | 37575 | 125 | 44775 | 42000 | 1000 | 1775 | 96 | 167 | 21 |

NOTES :
1. ALL DIMENSIONS ARE IN MILIMETERS.
2. BORED PILE MAIN BARS ARE PROVIDED WITHOUT ANY SPLICE. HOWEVER SPLICING OF MAIN BARS BY MECHANICAL COUPLERS ARE ALLOWED WITH PERMISSION FROM THE STRUCTURAL ENGINEER.
3. COMPOSITE COLUMN SOCKET TYPE CONNECTION SEE DWG. NO. TSB-036
4. CONCRETE : fc' = 30MPa
5. REINFORCING STEEL= D51 : YIELD STRENGTH = 345 N/mm2
OTHERS : YIELD STRENGTH = 390 N/mm2

BAR BENDING DIAGRAM

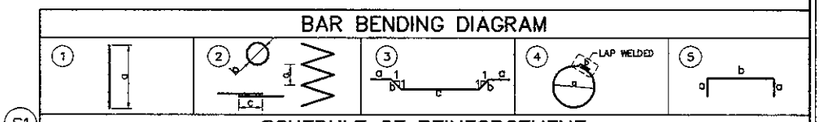


SCHEDULE OF REINFORCEMENT

| LOCATION | BAR MARK | SIZE (mm) | BEND TYPE | DIMENSION(mm) OUT TO OUT a | b | c | d | e | f | LENGTH (mm) | NO. REQ'D. | UNIT WEIGHT (kg/m) | WEIGHT (kg) |
|---|---|---|---|---|---|---|---|---|---|---|---|---|---|
| PIER P4L DIA = 2500 mm L = 48000 mm | B1 | 51 | 1 | 47775 | | | | | | 47775 | 26 | 15.90 | 19750 |
| | B2 | 51 | 1 | 18000 | | | | | | 18000 | 13 | 15.90 | 3721 |
| | B3a | 19 | 2 | 75 | 2300 | 500 | | | | 730034 | 1 | 2.23 | 1628 |
| | B3b | 19 | 2 | 225 | 2300 | 500 | | | | 1354460 | 1 | 2.23 | 3020 |
| | S1 | 19 | 3 | 150 | 170 | 250 | | | | 890 | 144 | 2.23 | 286 |
| | S2 | 19 | 4 | 2160 | 170 | | | | | 6952 | 48 | 2.23 | 744 |
| | S3 | 16 | 5 | 150 | 1979 | | | | | 2279 | 14 | 1.58 | 50 |
| | | | | | | | | | | TOTAL WEIGHT FOR / PILE = 29,200 Kgs. | | | |
| | | | | | | | | | | TOTAL VOLUME CONCRETE = 235.62 m3 | | | |
| PIER P4R DIA = 2500 mm L = 39000 mm | B1 | 51 | 1 | 38775 | | | | | | 38775 | 26 | 15.90 | 16030 |
| | B2 | 51 | 1 | 18000 | | | | | | 18000 | 13 | 15.90 | 3721 |
| | B3a | 19 | 2 | 75 | 2300 | 500 | | | | 730034 | 1 | 2.23 | 1628 |
| | B3b | 19 | 2 | 225 | 2300 | 500 | | | | 1053580 | 1 | 2.23 | 2349 |
| | S1 | 19 | 3 | 150 | 170 | 250 | | | | 890 | 114 | 2.23 | 226 |
| | S2 | 19 | 4 | 2160 | 170 | | | | | 6952 | 38 | 2.23 | 589 |
| | S3 | 16 | 5 | 150 | 1979 | | | | | 2279 | 14 | 1.58 | 50 |
| | | | | | | | | | | TOTAL WEIGHT FOR / PILE = 24,593 Kgs. | | | |
| | | | | | | | | | | TOTAL VOLUME CONCRETE = 191.44 m3 | | | |
| PIER P5L DIA = 2500 mm L = 38000 mm | B1 | 51 | 1 | 37800 | | | | | | 37800 | 26 | 15.90 | 15627 |
| | B2 | 51 | 1 | 18000 | | | | | | 18000 | 13 | 15.90 | 3721 |
| | B3a | 19 | 2 | 75 | 2300 | 500 | | | | 722312 | 1 | 2.23 | 1611 |
| | B3b | 19 | 2 | 225 | 2300 | 500 | | | | 1023192 | 1 | 2.23 | 2282 |
| | S1 | 19 | 3 | 150 | 170 | 250 | | | | 890 | 114 | 2.23 | 226 |
| | S2 | 19 | 4 | 2160 | 170 | | | | | 6952 | 38 | 2.23 | 589 |
| | S3 | 16 | 5 | 150 | 1979 | | | | | 2279 | 14 | 1.58 | 50 |
| | | | | | | | | | | TOTAL WEIGHT FOR / PILE = 24,105 Kgs. | | | |
| | | | | | | | | | | TOTAL VOLUME CONCRETE = 186.53 m3 | | | |
| PIER P5R DIA = 2500 mm L = 62000 mm | B1 | 51 | 1 | 61800 | | | | | | 61800 | 26 | 15.90 | 25548 |
| | B2 | 51 | 1 | 18000 | | | | | | 18000 | 13 | 15.90 | 3721 |
| | B3a | 19 | 2 | 75 | 2300 | 500 | | | | 737756 | 1 | 2.23 | 1645 |
| | B3b | 19 | 2 | 225 | 2300 | 500 | | | | 1820724 | 1 | 2.23 | 4060 |
| | S1 | 19 | 3 | 150 | 170 | 250 | | | | 890 | 186 | 2.23 | 369 |
| | S2 | 19 | 4 | 2160 | 170 | | | | | 6952 | 62 | 2.23 | 961 |
| | S3 | 16 | 5 | 150 | 1979 | | | | | 2279 | 14 | 1.58 | 50 |
| | | | | | | | | | | TOTAL WEIGHT FOR / PILE = 36,355 Kgs. | | | |
| | | | | | | | | | | TOTAL VOLUME CONCRETE = 304.34 m3 | | | |
| PIER P6 DIA = 2500 mm L = 45000 mm | B1 | 51 | 1 | 44775 | | | | | | 44775 | 26 | 15.90 | 18510 |
| | B2 | 51 | 1 | 18000 | | | | | | 18000 | 13 | 15.90 | 3721 |
| | B3a | 19 | 2 | 75 | 2300 | 500 | | | | 723312 | 1 | 2.23 | 1613 |
| | B3b | 19 | 2 | 225 | 2300 | 500 | | | | 1257074 | 1 | 2.23 | 2803 |
| | S1 | 19 | 3 | 150 | 170 | 250 | | | | 890 | 132 | 2.23 | 262 |
| | S2 | 19 | 4 | 2160 | 170 | | | | | 6952 | 44 | 2.23 | 682 |
| | S3 | 16 | 5 | 150 | 1979 | | | | | 2279 | 14 | 1.58 | 50 |
| | | | | | | | | | | TOTAL WEIGHT FOR / PILE = 27,641 Kgs. | | | |
| | | | | | | | | | | TOTAL VOLUME CONCRETE = 220.89 m3 | | | |

THE SCHEDULE OF REINFORCEMENT SHOWN ON THE BAR BENDING DIAGRAM TABLE IS FOR REFERENCE ONLY. THE CONTRACTOR SHOULD CHECK AND VERIFY ALL DIMENSIONS, SIZES AND QUANTITIES OF REINFORCEMENT.

BORED PILE REINF. DETAILS (PIER P4, P5 & P6)
SCALE AS SHOWN

PRINTED: OCT. 18, 2006

| JAPAN INTERNATIONAL COOPERATION AGENCY<br>KATAHIRA & ENGINEERS INTERNATIONAL | DESIGNED BY | CHECKED BY | SUBMITTED BY | REPUBLIC OF INDONESIA<br>MINISTRY OF PUBLIC WORKS<br>DIRECTORATE GENERAL OF HIGHWAYS | PROJECT AND LOCATION : | SCALE : | DRAWING TITLE : | DRAWING NO : |
|---|---|---|---|---|---|---|---|---|
| | Name: A. GOURLEY | Name: T. OKUMURA | Name: M. KIUCHI | | DETAILED DESIGN STUDY OF<br>NORTH JAVA CORRIDOR FLYOVER PROJECT<br>TANGGULANGIN FLYOVER - CONTRACT PACKAGE 3<br>( PETERONGAN -TANGGULANGIN )<br>EAST JAVA PROVINCE | 1 : 50<br>1 : 100 | **BORED PILE REINF. DETAILS**<br>(PIER P7, P8) | TSB-040 |
| | Sign | Sign | Sign | APPROVED BY: Ir. HERRY VAZA M,Eng.Sc<br>NIP. : 110038400 | | FULL SIZE A3 | | SHEET NO : 40 / 45 |
| | Date | Date | Date | Sign / Date | | | | |

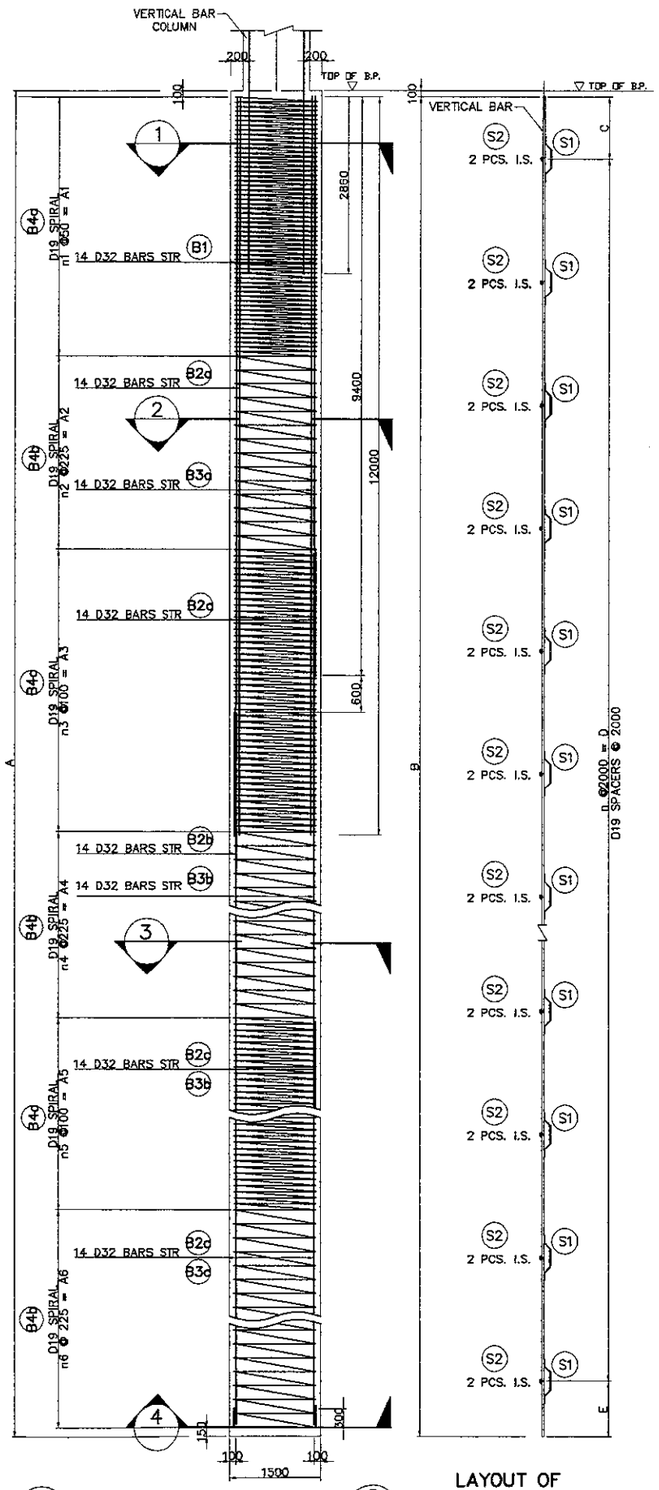


A SECTION
SCALE 1:100

B LAYOUT OF STIFFENER/SPACER
SCALE 1:100

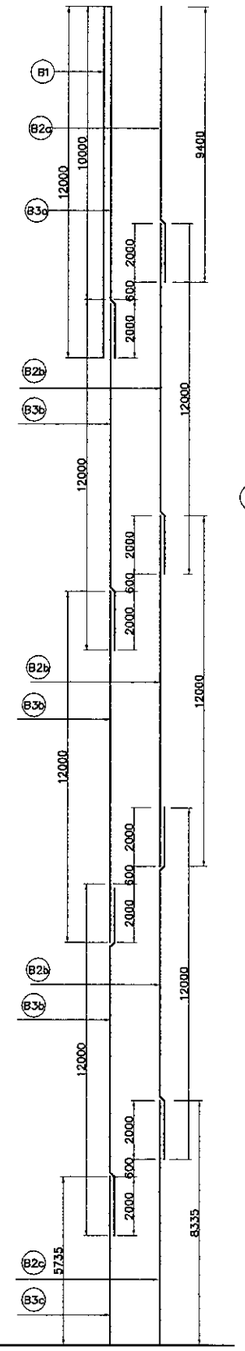

F SCHEMATIC DETAIL
NOT TO SCALE

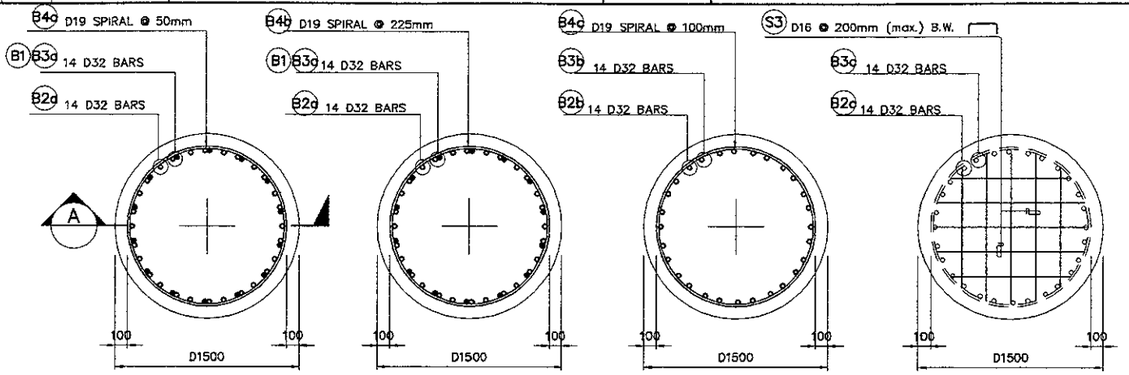


1 SECTION
SCALE 1:50

2 SECTION
SCALE 1:50

3 SECTION
SCALE 1:50

4 SECTION
SCALE 1:50

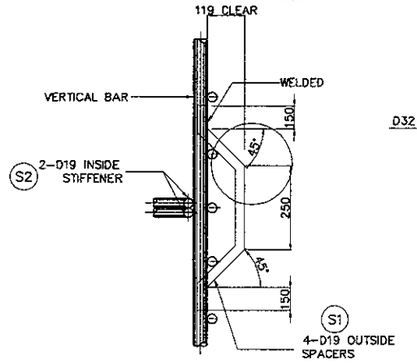


C DETAIL OF STIFFENER/SPACER
NOT TO SCALE

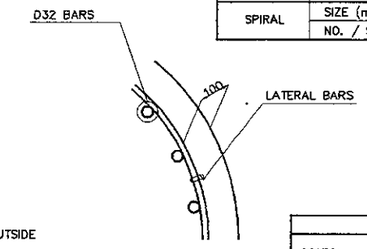


E TYPICAL BAR LAYOUT DETAIL
NOT TO SCALE

| BORED PILE TYPE | | BP-TF4 |
|---|---|---|
| SIZE (mm) | | D1500 |
| MAIN BARS | SIZE (mm) | 32 |
| | NO. OF LAYERS | 1.0 |
| | NO. OF PCS. | 42 |
| SPIRAL | SIZE (mm) | 19 |
| | NO. / SET | |

**NOTES ON LAP-WELD CONNECTION :**

1. SPIRAL REINFORCEMENT ARE LAP-WELD CONNECTED (FLARED-V-GROOVE TYPE)
2. WELDING SHOULD CONFORM TO AWS (D1.4) *STRUCTURAL WELDING CODE REINFORCED STEEL*
3. USE ELECTRODE E90XX.
4. CARE SHOULD BE TAKEN NOT TO DAMAGE THE COLUMN MAIN BARS DURING WELDING.

**NOTES :**

1. ALL DIMENSIONS ARE IN MILIMETERS.
2. BORED PILE MAIN BARS ARE PROVIDED WITHOUT ANY SPLICE. HOWEVER SPLICING OF MAIN BARS BY MECHANICAL COUPLERS ARE ALLOWED WITH PERMISSION FROM THE STRUCTURAL ENGINEER.
3. CONCRETE : Fc' = 30MPa
4. REINFORCING STEEL=
   D51 : YIELD STRENGTH = 345 N/mm2
   OTHERS : YIELD STRENGTH = 390 N/mm2

| DIMENSION | | | | | | |
|---|---|---|---|---|---|---|
| LOCATION | A (mm) | B (mm) | C (mm) | D (mm) | E (mm) | n |
| P7, P8 | 48000 | 45750 | 1000 | 44000 | 750 | 22 |

| DIMENSION | | | | | | | | | | | | |
|---|---|---|---|---|---|---|---|---|---|---|---|---|
| LOCATION | A1 (mm) | A2 (mm) | A3 (mm) | A4 (mm) | A5 (mm) | A6 (mm) | n1 | n2 | n3 | n4 | n5 | n6 |
| P7, P8 | 4200 | 3150 | 4600 | 5400 | 4700 | 3600 | 60 | 14 | 46 | 24 | 47 | 16 |

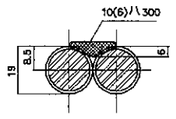


SECTION-D1
SINGLE FLARED-V-GROOVE WELD

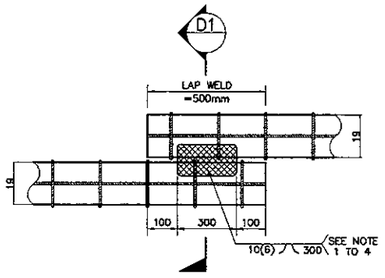


DIRECT LAP JOINT WITH BARS IN CONTACT

D DETAIL OF SPIRAL REINF. FULL LAP-WELD CONNECTION
NOT TO SCALE

## BAR BENDING DIAGRAM

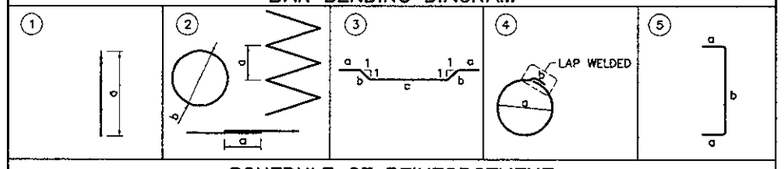


## SCHEDULE OF REINFORCEMENT

| LOCATION | BAR MARK | SIZE (mm) | BEND TYPE | DIMENSION(mm) OUT TO OUT a | b | c | d | e | f | LENGTH (mm) | NO. REQ'D. | UNIT WEIGHT (kg/m) | WEIGHT (kg) |
|---|---|---|---|---|---|---|---|---|---|---|---|---|---|
| PIER P7, P8 DIA = 1,500 mm L = 48000 mm | B1 | 32 | 1 | 12000 | | | | | | 12000 | 14 | 6.31 | 1060 |
| | B2a | 32 | 1 | 9400 | | | | | | 9400 | 14 | 6.31 | 830 |
| | B2b | 32 | 1 | 12000 | | | | | | 12000 | 42 | 6.31 | 3180 |
| | B2c | 32 | 1 | 8335 | | | | | | 8335 | 14 | 6.31 | 736 |
| | B3a | 32 | 1 | 12000 | | | | | | 12000 | 14 | 6.31 | 1060 |
| | B3b | 32 | 1 | 12000 | | | | | | 12000 | 42 | 6.31 | 3180 |
| | B3c | 32 | 1 | 5735 | | | | | | 5735 | 14 | 6.31 | 507 |
| | B4a | 19 | 2 | 50 | 1300 | 500 | | | | 255420 | 1 | 2.23 | 570 |
| | B4b | 19 | 2 | 225 | 1300 | 500 | | | | 74648 | 1 | 2.23 | 166 |
| | B4c | 19 | 2 | 100 | 1300 | 500 | | | | 594818 | 1 | 2.23 | 1326 |
| | S1 | 19 | 3 | 150 | 170 | 250 | | | | 890 | 92 | 2.23 | 183 |
| | S2 | 19 | 4 | 1216 | 170 | | | | | 7806 | 46 | 2.23 | 801 |
| | S3 | 16 | 5 | 150 | 1865 | | | | | 2165 | 10 | 1.58 | 34 |
| | | | | | | | | | | TOTAL WEIGHT / PILE = 13,634 Kgs. | | | |
| | | | | | | | | | | TOTAL VOLUME FOR BOREPILES = 81.29 Cu.m | | | |

THE SCHEDULE OF REINFORCEMENT SHOWN ON THE BAR BENDING DIAGRAM TABLE IS FOR REFERENCE ONLY. THE CONTRACTOR SHOULD CHECK AND VERIFY ALL DIMENSIONS, SIZES AND QUANTITIES OF REINFORCEMENT.

# BORED PILE REINFORCEMENT DETAIL ( PIER P7, P8 )

SCALE AS SHOWN

PRINTED: OCT. 18, 2005

| JAPAN INTERNATIONAL COOPERATION AGENCY / KATAHIRA & ENGINEERS INTERNATIONAL | DESIGNED BY | CHECKED BY | SUBMITTED BY | REPUBLIC OF INDONESIA<br>MINISTRY OF PUBLIC WORKS<br>DIRECTORATE GENERAL OF HIGHWAYS | PROJECT AND LOCATION : | SCALE : | DRAWING TITLE : | DRAWING NO : |
|---|---|---|---|---|---|---|---|---|
| | Name: A. GOURLEY | Name: T. OKUMURA | Name: M. KIUCHI | | DETAILED DESIGN STUDY OF<br>NORTH JAVA CORRIDOR FLYOVER PROJECT<br>TANGGULANGIN FLYOVER - CONTRACT PACKAGE 3<br>( PETERONGAN -TANGGULANGIN )<br>EAST JAVA PROVINCE | 1 : 50<br>1 : 100 | **BORED PILE REINF. DETAILS FOR ABUTMENT A1 (Ø1800mm)** | TSB-041 |
| | Sign | Sign | Sign | APPROVED BY: Ir. HERRY VAZA M,Eng.Sc<br>NIP. : 110038400 | | | | SHEET NO : 41 / 45 |
| | Date | Date | Date | Sign / Date | | FULL SIZE A3 | | |

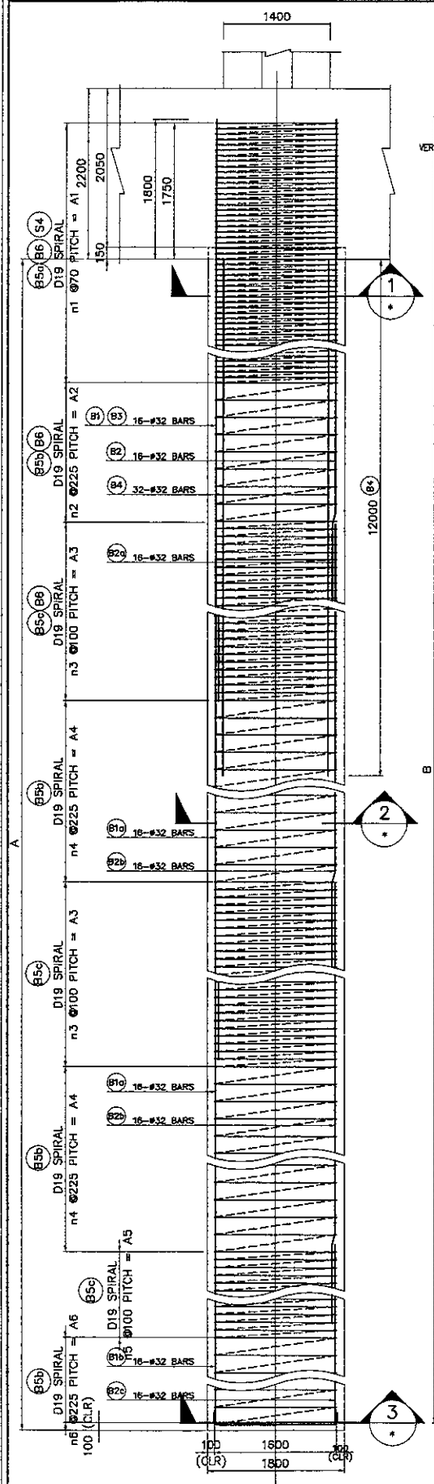


A ELEVATION
SCALE 1 : 100

B LAYOUT OF STIFFENER
SCALE 1 : 100

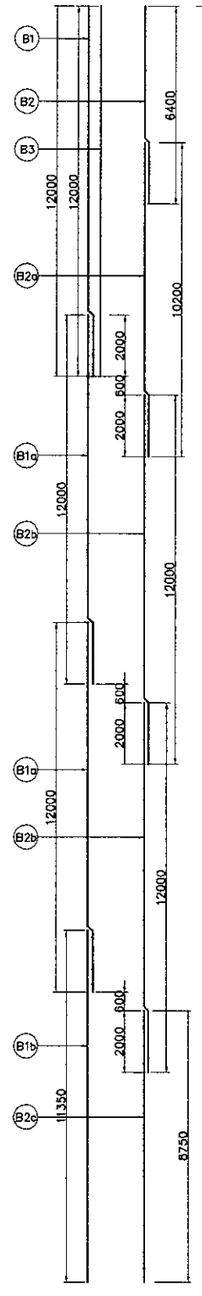


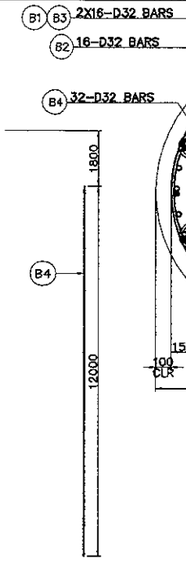


C SCHEMATIC DETAIL
NOT TO SCALE

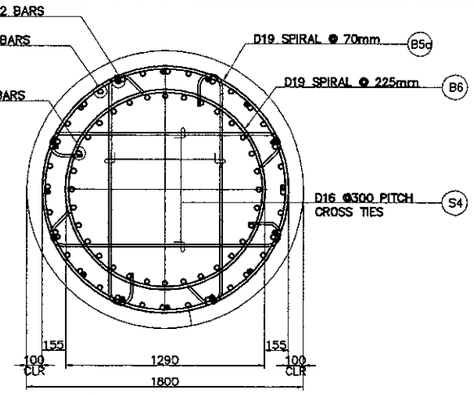


1 SECTION
SCALE 1 :50

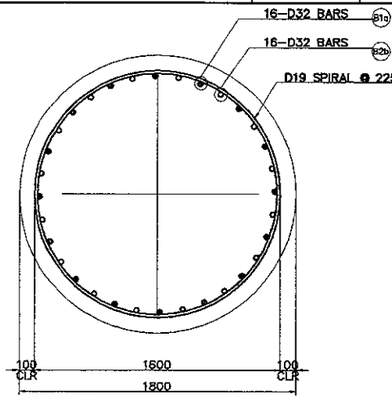


2 SECTION
SCALE 1 :50

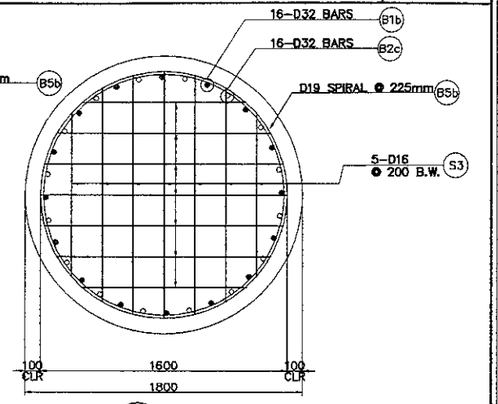


3 SECTION
SCALE 1 :50

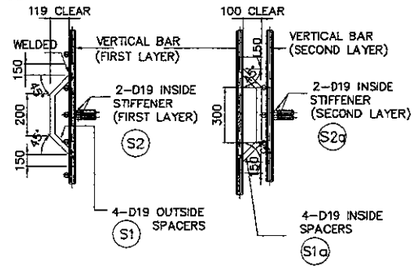


E DETAIL OF STIFFENER/SPACER
NOT TO SCALE

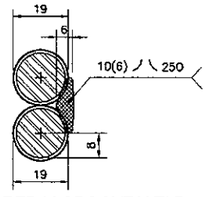


DOUBLE FLARED-V-GROOVE WELD
SECTION - D1

NOTE : SPIRAL PITCH SHALL BE 100mm AT SPLICE LOCATION.

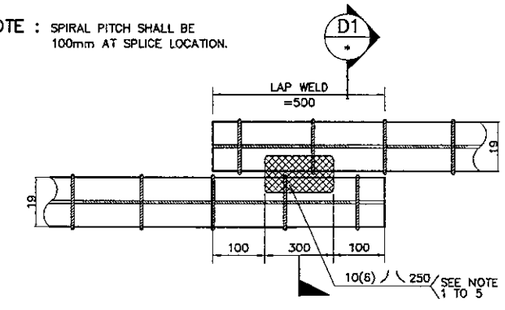


DIRECT LAP JOINT WITH BARS IN CONTACT

D DETAILS OF SPIRAL REINF. FULL LAP-WELD CONNECTION
NOT TO SCALE

**NOTES ON LAP-WELD CONNECTION :**

1. SPIRAL REINFORCEMENT ARE LAP-WELD CONNECTED (FLARED-V-GROOVE TYPE)
2. WELDING SHOULD CONFORM TO AWS (D1.4) *STRUCTURAL WELDING CODE REINFORCED STEEL.*
3. USE ELECTRODE E90XX.
4. CARE SHOULD BE TAKEN NOT TO DAMAGE THE COLUMN MAIN BARS DURING WELDING.

**NOTES :**

1. ALL DIMENSIONS ARE IN MILIMETERS.
2. BORED PILE MAIN BARS ARE PROVIDED WITHOUT ANY SPLICE. HOWEVER SPLICING OF MAIN BARS BY MECHANICAL COUPLERS ARE ALLOWED WITH PERMISSION FROM THE STRUCTURAL ENGINEER.
3. CONCRETE : Fc' = 30MPa
4. REINFORCING STEEL= D51 : YIELD STRENGTH = 345 N/mm2
   OTHERS : YIELD STRENGTH = 390 N/mm2

| LOCATION | DIMENSION | | | | | | | | |
|---|---|---|---|---|---|---|---|---|---|
| | A (mm) | B (mm) | C1 (mm) | C2 (mm) | D1 (mm) | D2 (mm) | E (mm) | n (S1) | n(S1a) |
| A1 | 40000 | 41670 | 1000 | 1800 | 38000 | 10000 | 870 | 19 | 5 |

| LOCATION | DIMENSION | | | | | | | | | | | |
|---|---|---|---|---|---|---|---|---|---|---|---|---|
| | A1 (mm) | A2 (mm) | A3 (mm) | A4 (mm) | A5 (mm) | A6 (mm) | n1 | n2 | n3 | n4 | n5 | n6 |
| A1 | 6300 | 3825 | 4700 | 5400 | 4600 | 5625 | 90 | 17 | 47 | 24 | 46 | 25 |

## BAR BENDING DIAGRAM

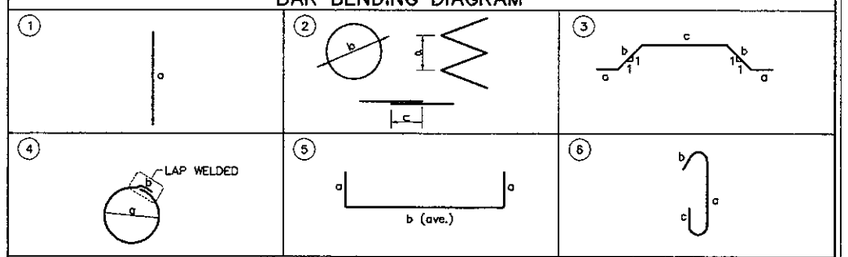


## SCHEDULE OF REINFORCEMENT

| LOCATION | BAR MARK | SIZE (mm) | BEND TYPE | DIMENSION(mm) OUT TO OUT a | b | c | d | e | f | LENGTH (mm) | NO. REQ'D. | UNIT WEIGHT (kg/m) | TOTAL WEIGHT (kg) | VOLUME CONCRETE (Cu.m) |
|---|---|---|---|---|---|---|---|---|---|---|---|---|---|---|
| ABUTMENT A1 | B1 | 32 | 1 | 12000 | | | | | | 12000 | 16 | 6.31 | 1212 | 101.80 |
| | B1a | 32 | 1 | 12000 | | | | | | 12000 | 32 | 6.31 | 2423 | |
| | B1b | 32 | 1 | 11350 | | | | | | 11350 | 16 | 6.31 | 1146 | |
| | B2 | 32 | 1 | 6400 | | | | | | 6400 | 16 | 6.31 | 646 | |
| | B2a | 32 | 1 | 10200 | | | | | | 10200 | 16 | 6.31 | 1030 | |
| | B2b | 32 | 1 | 12000 | | | | | | 12000 | 32 | 6.31 | 2423 | |
| | B2c | 32 | 1 | 8750 | | | | | | 8750 | 16 | 6.31 | 883 | |
| | B3 | 32 | 1 | 12000 | | | | | | 12000 | 16 | 6.31 | 1212 | |
| | B4 | 32 | 1 | 12000 | | | | | | 12000 | 32 | 6.31 | 2423 | |
| | B5a | 19 | 2 | 70 | 1600 | 500 | | | | 380728 | 1 | 2.23 | 849 | |
| | B5b | 19 | 2 | 225 | 1600 | 500 | | | | 230008 | 1 | 2.23 | 513 | |
| | B5c | 19 | 2 | 100 | 1600 | 500 | | | | 376156 | 1 | 2.23 | 839 | |
| | B6 | 19 | 2 | 225 | 1290 | 500 | | | | 228232 | 1 | 2.23 | 509 | |
| | S1 | 19 | 3 | 150 | 170 | 250 | | | | 890 | 80 | 2.23 | 159 | |
| | S1a | 19 | 3 | 150 | 150 | 350 | | | | 950 | 24 | 2.23 | 51 | |
| | S2 | 19 | 4 | 1498 | 170 | | | | | 4874 | 40 | 2.23 | 435 | |
| | S2a | 19 | 4 | 1188 | 170 | | | | | 3900 | 12 | 2.23 | 104 | |
| | S3 | 16 | 5 | 150 | 1329 | | | | | 1629 | 14 | 1.58 | 36 | |
| | S4 | 16 | 6 | 1345 | 316 | 380 | | | | 3006 | 72 | 1.58 | 342 | |
| | | | | | | | | | | TOTAL WEIGHT PER PILE | | = | 17,234 Kgs | |

THE REINFORCEMENT SHOWN ON THIS TABLE IS FOR REFERENCE ONLY. THE CONTRACTOR SHOULD CHECK AND VERIFY ALL DIMENSIONS, SIZES AND QUANTITIES OF REINFORCEMENT.

1 BORED PILE REINF. DETAILS FOR ABUT. A1 (Ø1800mm)
SCALE AS SHOWN

PRINTED: OCT. 18, 2006

| JAPAN INTERNATIONAL COOPERATION AGENCY<br>KATAHIRA & ENGINEERS INTERNATIONAL | DESIGNED BY | CHECKED BY | SUBMITTED BY | REPUBLIC OF INDONESIA<br>MINISTRY OF PUBLIC WORKS<br>DIRECTORATE GENERAL OF HIGHWAYS | PROJECT AND LOCATION : | SCALE : | DRAWING TITLE : | DRAWING NO : |
|---|---|---|---|---|---|---|---|---|
| | Name: A. GOURLEY | Name: T. OKUMURA | Name: M. KIUCHI | | DETAILED DESIGN STUDY OF NORTH JAVA CORRIDOR FLYOVER PROJECT TANGGULANGIN FLYOVER - CONTRACT PACKAGE 3 ( PETERONGAN -TANGGULANGIN ) EAST JAVA PROVINCE | 1 : 50<br>1 : 100 | **BORED PILE REINF. DETAILS FOR ABUTMENT A2 (Ø1800mm)** | TSB-042 |
| | Sign | Sign | Sign | APPROVED BY: Ir. HERRY VAZA M,Eng.Sc<br>NIP. : 110038400 | | | | SHEET NO : 42 / 45 |
| | Date | Date | Date | Sign / Date | | FULL SIZE A3 | | |

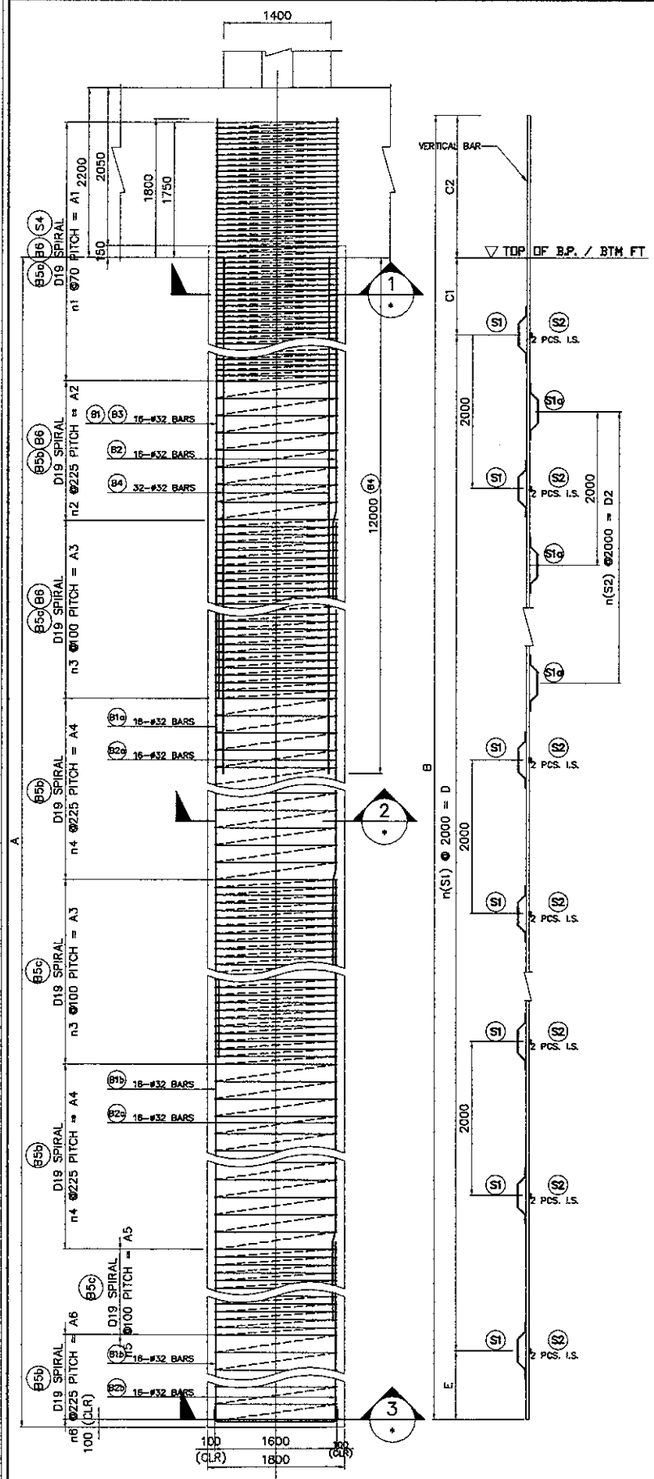


A ELEVATION
SCALE 1 : 100

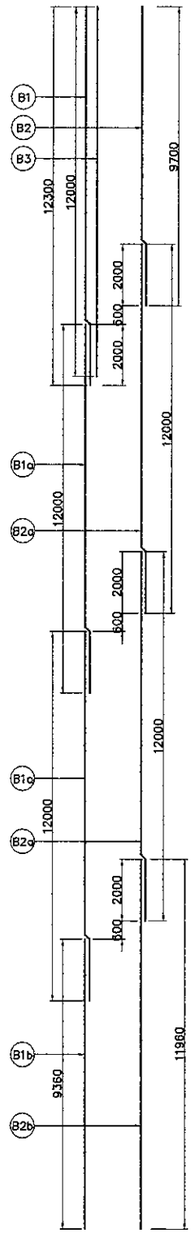


B LAYOUT OF STIFFENER
SCALE 1 : 100

C SCHEMATIC DETAIL
NOT TO SCALE

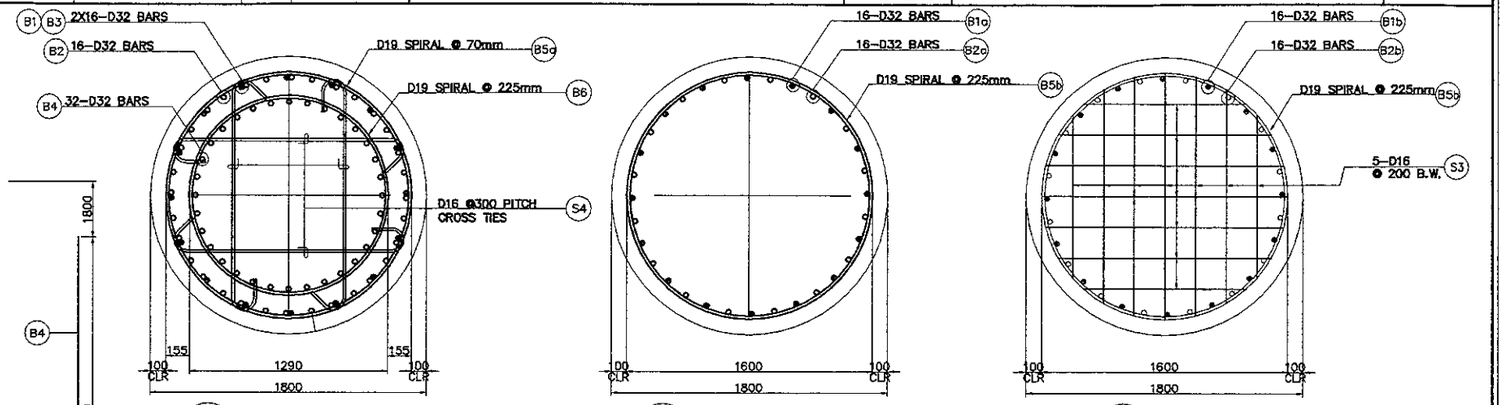


1 SECTION
SCALE 1 :50

2 SECTION
SCALE 1 :50

3 SECTION
SCALE 1 :50

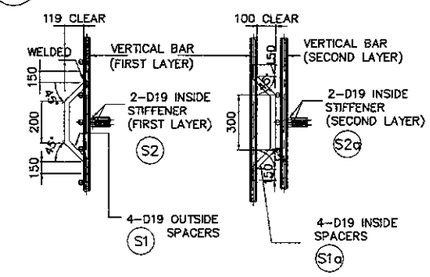


E DETAIL OF STIFFENER/SPACER
NOT TO SCALE

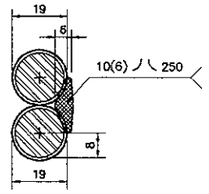


DOUBLE FLARED-V-GROOVE WELD SECTION - D1

NOTE : SPIRAL PITCH SHALL BE 100mm AT SPLICE LOCATION.

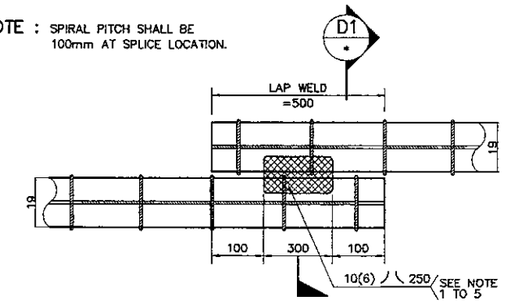


DIRECT LAP JOINT WITH BARS IN CONTACT

D DETAILS OF SPIRAL REINF. FULL LAP-WELD CONNECTION
NOT TO SCALE

1 BORED PILE REINF. DETAILS FOR ABUT. A2 (Ø1800mm)
SCALE AS SHOWN

**NOTES ON LAP-WELD CONNECTION :**

1. SPIRAL REINFORCEMENT ARE LAP-WELD CONNECTED (FLARED-V-GROOVE TYPE)
2. WELDING SHOULD CONFORM TO AWS (D1.4) "STRUCTURAL WELDING CODE REINFORCED STEEL"
3. USE ELECTRODE E90XX.
4. CARE SHOULD BE TAKEN NOT TO DAMAGE THE COLUMN MAIN BARS DURING WELDING.

**NOTES :**

1. ALL DIMENSIONS ARE IN MILIMETERS.
2. BORED PILE MAIN BARS ARE PROVIDED WITHOUT ANY SPLICE. HOWEVER SPLICING OF MAIN BARS BY MECHANICAL COUPLERS ARE ALLOWED WITH PERMISSION FROM THE STRUCTURAL ENGINEER.
3. CONCRETE : Fc' = 30MPa
4. REINFORCING STEEL= D51 : YIELD STRENGTH = 345 N/mm2
   OTHERS : YIELD STRENGTH = 390 N/mm2

| LOCATION | DIMENSION A (mm) | B (mm) | C1 (mm) | C2 (mm) | D1 (mm) | D2 (mm) | E (mm) | n (S1) | n(S1a) |
|---|---|---|---|---|---|---|---|---|---|
| A2 | 38000 | 39360 | 1000 | 1800 | 36000 | 10000 | 1440 | 18 | 5 |

| LOCATION | DIMENSION A1 (mm) | A2 (mm) | A3 (mm) | A4 (mm) | A5 (mm) | A6 (mm) | n1 | n2 | n3 | n4 | n5 | n6 |
|---|---|---|---|---|---|---|---|---|---|---|---|---|
| A2 | 5390 | 2250 | 4600 | 5400 | 4600 | 7200 | 77 | 10 | 46 | 24 | 46 | 32 |

## BAR BENDING DIAGRAM

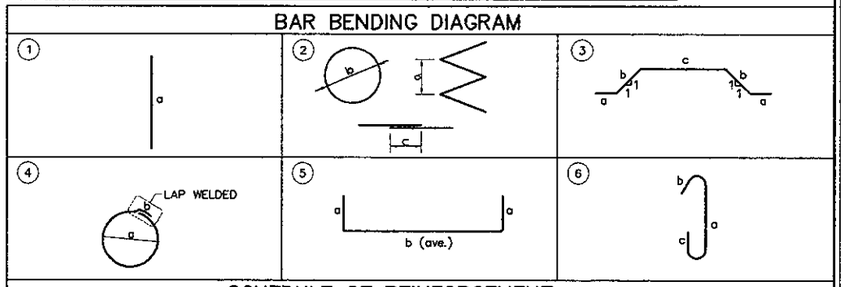


## SCHEDULE OF REINFORCEMENT

| LOCATION | BAR MARK | SIZE (mm) | BEND TYPE | DIMENSION(mm) OUT TO OUT a | b | c | d | e | f | LENGTH (mm) | NO. REQ'D. | UNIT WEIGHT (kg/m) | TOTAL WEIGHT (kg) | VOLUME CONCRETE (Cu.m) |
|---|---|---|---|---|---|---|---|---|---|---|---|---|---|---|
| ABUTMENT A2 | B1 | 32 | 1 | 12000 | | | | | | 12000 | 16 | 6.31 | 1212 | 96.71 |
| | B1a | 32 | 1 | 12000 | | | | | | 12000 | 32 | 6.31 | 2423 | |
| | B1b | 32 | 1 | 9360 | | | | | | 9360 | 16 | 6.31 | 945 | |
| | B2 | 32 | 1 | 9400 | | | | | | 9400 | 16 | 6.31 | 949 | |
| | B2a | 32 | 1 | 12000 | | | | | | 12000 | 32 | 6.31 | 2423 | |
| | B2b | 32 | 1 | 11960 | | | | | | 11960 | 16 | 6.31 | 1207 | |
| | B3 | 32 | 1 | 12000 | | | | | | 12000 | 16 | 6.31 | 1212 | |
| | B4 | 32 | 1 | 12000 | | | | | | 12000 | 32 | 6.31 | 2423 | |
| | B5a | 19 | 2 | 70 | 1600 | 500 | | | | 377228 | 1 | 2.23 | 841 | |
| | B5b | 19 | 2 | 225 | 1600 | 500 | | | | 229508 | 1 | 2.23 | 512 | |
| | B5c | 19 | 2 | 100 | 1600 | 500 | | | | 375656 | 1 | 2.23 | 838 | |
| | B6 | 19 | 2 | 225 | 1290 | 500 | | | | 228232 | 1 | 2.23 | 509 | |
| | S1 | 19 | 3 | 150 | 170 | 250 | | | | 890 | 76 | 2.23 | 151 | |
| | S1a | 19 | 3 | 150 | 150 | 350 | | | | 950 | 24 | 2.23 | 51 | |
| | S2 | 19 | 4 | 1498 | 170 | | | | | 4874 | 38 | 2.23 | 413 | |
| | S2a | 19 | 4 | 1188 | 170 | | | | | 3900 | 12 | 2.23 | 104 | |
| | S3 | 16 | 5 | 150 | 1329 | | | | | 1629 | 14 | 1.58 | 36 | |
| | S4 | 16 | 6 | 1345 | 316 | 380 | | | | 3006 | 72 | 1.58 | 342 | |
| | | | | | | | TOTAL WEIGHT PER PILE = 16,590 Kgs | | | | | | | |

THE REINFORCEMENT SHOWN ON THIS TABLE IS FOR REFERENCE ONLY. THE CONTRACTOR SHOULD CHECK AND VERIFY ALL DIMENSIONS, SIZES AND QUANTITIES OF REINFORCEMENT.

PRINTED: OCT. 18, 2006

| JAPAN INTERNATIONAL COOPERATION AGENCY / KATAHIRA & ENGINEERS INTERNATIONAL | DESIGNED BY | CHECKED BY | SUBMITTED BY | REPUBLIC OF INDONESIA<br>MINISTRY OF PUBLIC WORKS<br>DIRECTORATE GENERAL OF HIGHWAYS | PROJECT AND LOCATION : | SCALE : | DRAWING TITLE : | DRAWING NO : |
|---|---|---|---|---|---|---|---|---|
| | Name: A. GOURLEY | Name: T. OKUMURA | Name: M. KIUCHI | | DETAILED DESIGN STUDY OF<br>NORTH JAVA CORRIDOR FLYOVER PROJECT<br>TANGGULANGIN FLYOVER - CONTRACT PACKAGE 3<br>( PETERONGAN -TANGGULANGIN )<br>EAST JAVA PROVINCE | N.T.S | SCHEDULE OF BORED PILE FONDATION | TSB-043 |
| | Sign | Sign | Sign | APPROVED BY: ir. HERRY VAZA M,Eng.Sc | | | | SHEET NO : |
| | Date | Date | Date | NIP. : 110038400 / Sign / Date | | FULL SIZE A3 | | 43 / 45 |

# SCHEDULE OF BORED PILE

## BP-TF1

PIER P1, P2, P7 & P8

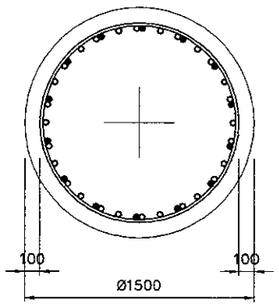


| BORED PILE TYPE | | BP-TF1 |
|---|---|---|
| SIZE (mm) | | 1500 |
| MAIN BARS | SIZE (mm) | 32 |
| | NO. LAYERS | 1 |
| | NO. OF PCS. | 42 |
| SPIRAL | SIZE (mm) | 19 |
| | NO. / SET | |

## BP-TF2

PIER P3

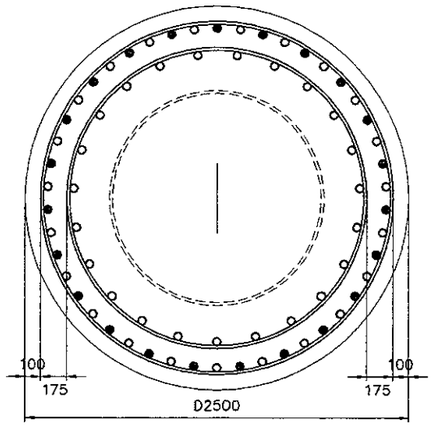


| BORED PILE TYPE | | BP-TF2 |
|---|---|---|
| SIZE (mm) | | 2500 |
| MAIN BARS | SIZE (mm) | 51 |
| | NO. LAYERS | 2 |
| | NO. OF PCS.(1) | 46 |
| | NO. OF PCS.(2) | 23 |
| SPIRAL | SIZE (mm) | 19 |
| | NO. / SET | |

## BP-TF3

PIER P4, P5 & P6

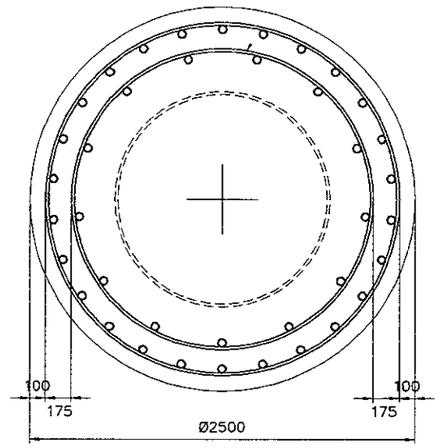


| BORED PILE TYPE | | BP-BF4 |
|---|---|---|
| SIZE (mm) | | 2500 |
| MAIN BARS | SIZE (mm) | 51 |
| | NO. LAYERS | 2 |
| | NO. OF PCS.(1) | 26 |
| | NO. OF PCS.(2) | 13 |
| SPIRAL | SIZE (mm) | 19 |
| | NO. / SET | |

## BP-TF4

ABUTMENT A1 & A2

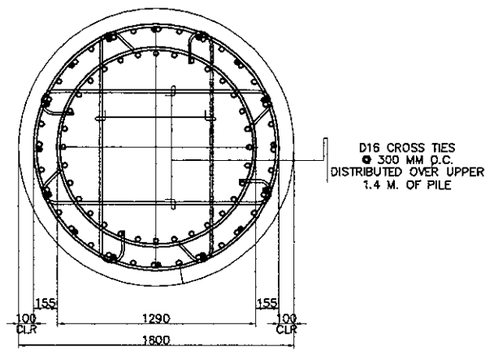


| BORED PILE TYPE | | BP-TF4 |
|---|---|---|
| SIZE (mm) | | 1800 |
| MAIN BARS | SIZE (mm) | 32 |
| | NO. LAYERS | 2 |
| | NO. OF PCS.(1) | 32 |
| | NO. OF PCS.(2) | 32 |
| SPIRAL | SIZE (mm) | 19 |
| | NO. / SET | |

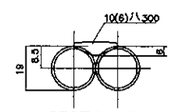


SECTION–D1

SINGLE FLARED–V–GROOVE WELD

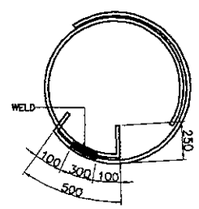


PLAN

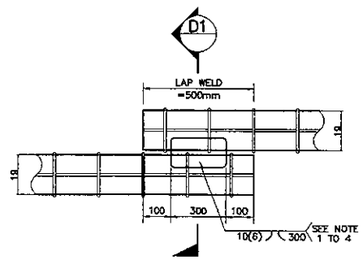


DIRECT LAP JOINT WITH BARS IN CONTACT

SECTIONS

DETAILS OF LAP WELD SPLICE
FOR SPIRAL

PRINTED: OCT. 18, 2006

| JAPAN INTERNATIONAL COOPERATION AGENCY<br>KATAHIRA & ENGINEERS INTERNATIONAL | DESIGNED BY | CHECKED BY | SUBMITTED BY | REPUBLIC OF INDONESIA<br>MINISTRY OF PUBLIC WORKS<br>DIRECTORATE GENERAL OF HIGHWAYS | PROJECT AND LOCATION : | SCALE : | DRAWING TITLE : | DRAWING NO : |
|---|---|---|---|---|---|---|---|---|
| | Name: A. GOURLEY | Name: T. OKUMURA | Name: M. KIUCHI | | DETAILED DESIGN STUDY OF NORTH JAVA CORRIDOR FLYOVER PROJECT TANGGULANGIN FLYOVER - CONTRACT PACKAGE 3 ( PETERONGAN -TANGGULANGIN ) EAST JAVA PROVINCE | 1 : 20<br>1 : 40<br>1 : 50<br>1 : 100 | TYPICAL APPROACH SLAB DETAILS ABUTMENT A1 & A2 | TSB-044 |
| | Sign | Sign | Sign | APPROVED BY: Ir. HERRY VAZA M,Eng.Sc | | | | SHEET NO : |
| | Date | Date | Date | NIP. : 110038400 Sign / Date | | FULL SIZE A3 | | 44 / 45 |

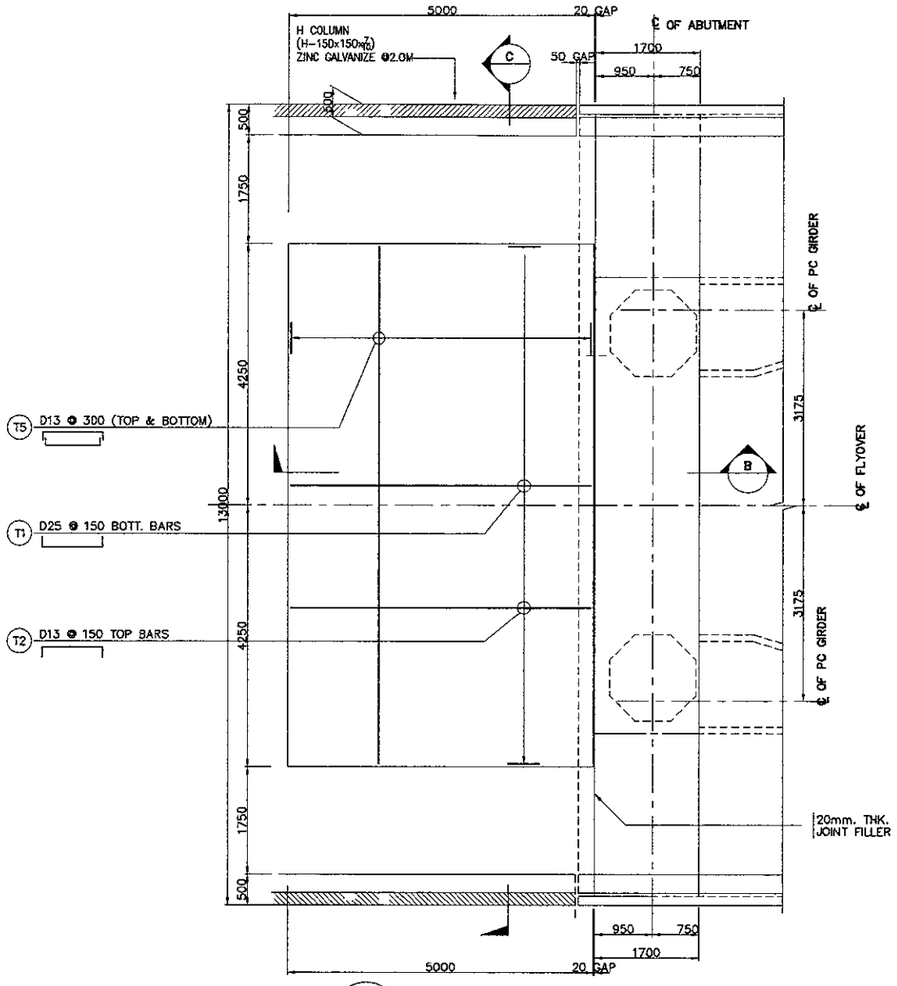


A PLAN
SCALE 1:100

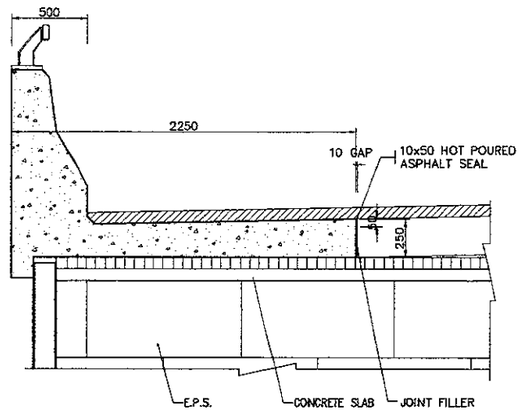


2 DETAIL
SCALE 1:40

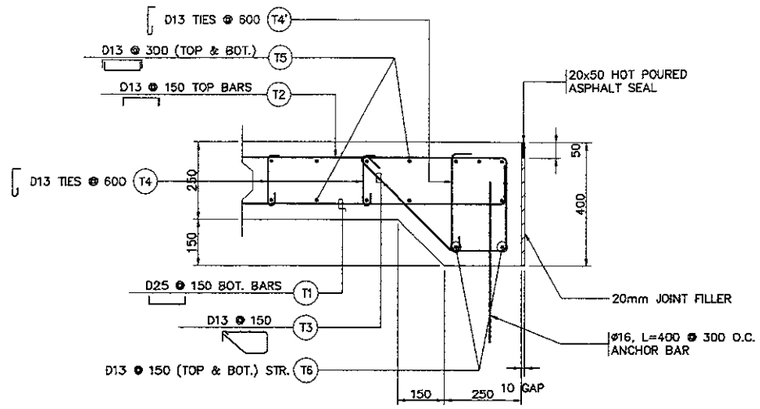


1 DETAIL
SCALE 1:20

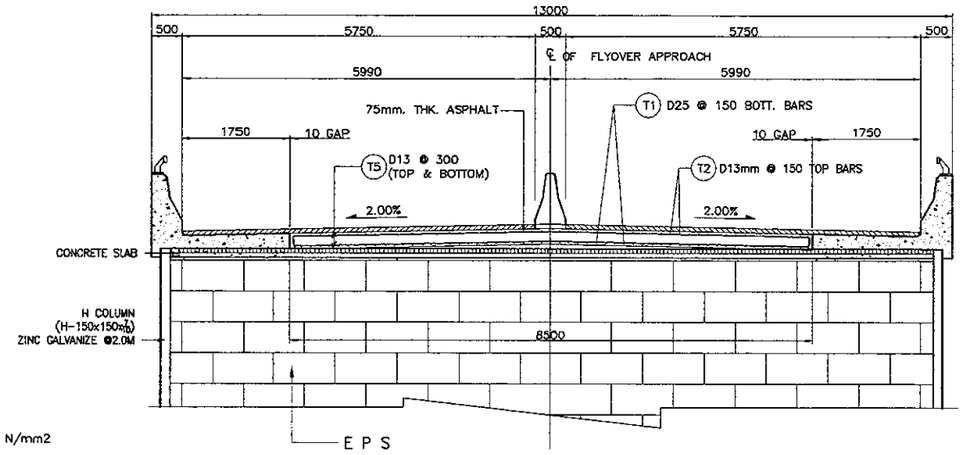


C SECTION @ APPROACH SLAB
SCALE 1:100

NOTES :
1. ALL DIMENSION ARE IN MILIMETERS.
2. CONCRETE : fc' = 24 MPa
3. REINFORCING STEEL : YIELD STRENGTH = 390 N/mm2
4. QUANTITY SHOWN ON TABLE IS FOR ONE APPROACH SLAB ONLY

## ESTIMATE OF QUANTITIES (PER APPROACH SLAB)

### BAR BENDING DIAGRAM

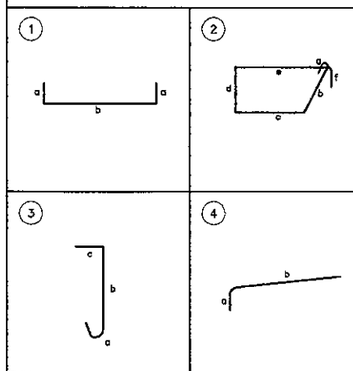


### SCHEDULE OF REINFORCEMENT

| LOCATION | BAR MARK | D (mm) | BEND TYPE | DIMENSION(mm) OUT TO OUT a | b | c | d | e | f | LENGTH (mm) | NO. REQ'D. | UNIT WEIGHT (kg/m.) | WEIGHT (kg) |
|---|---|---|---|---|---|---|---|---|---|---|---|---|---|
| TRANSITION SLAB | T1 | 25 | 1 | 100 | 4900 | | | | | 5100 | 57 | 3.85 | 1119 |
| | T2 | 13 | 1 | 100 | 4900 | | | | | 5100 | 57 | 1.04 | 302 |
| | T3 | 13 | 2 | 150 | 300 | 250 | 300 | 550 | 150 | 1700 | 114 | 1.04 | 202 |
| | T4 | 13 | 3 | 150 | 150 | 200 | | | | 500 | 135 | 1.04 | 70 |
| | T4' | 13 | 3 | 150 | 150 | 200 | | | | 650 | 30 | 1.04 | 20 |
| | T5 | 13 | 1 | 100 | 8400 | | | | | 8600 | 34 | 1.04 | 304 |
| | T6 | 13 | 4 | 100 | 8400 | | | | | 8500 | 4 | 1.04 | 35 |
| | | | | | | | | | | TOTAL WEIGHT | | | = 2,053 kg. |
| VOLUME OF CONCRETE | APPROACH SLAB | | | | | | | | | | | | = 11.454 cu.m. |
| | | | | | | | | | | TOTAL VOLUME A1 + A2 = 22.908 cu.m. | | | |

THE REINFORCEMENT SHOWN ON THIS TABLE IS FOR REFERENCE ONLY. THE CONTRACTOR SHOULD CHECK AND VERIFY ALL DIMENSIONS, SIZES AND QUANTITIES OF REINFORCEMENT.

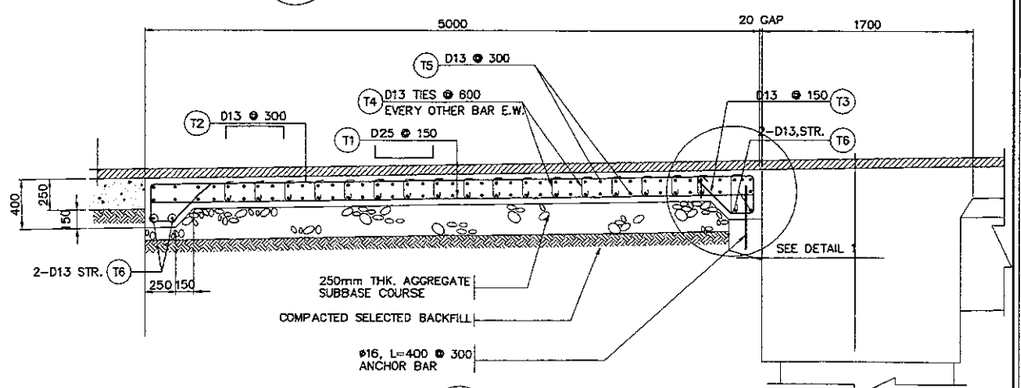


B SECTION
SCALE 1:50

PRINTED: OCT. 18, 2006

| JAPAN INTERNATIONAL COOPERATION AGENCY / KATAHIRA & ENGINEERS INTERNATIONAL | DESIGNED BY | CHECKED BY | SUBMITTED BY | REPUBLIC OF INDONESIA MINISTRY OF PUBLIC WORKS DIRECTORATE GENERAL OF HIGHWAYS | PROJECT AND LOCATION : | SCALE : | DRAWING TITLE : | DRAWING NO : |
|---|---|---|---|---|---|---|---|---|
| | Name: A. GOURLEY | Name: T. OKUMURA | Name: M. KIUCHI | | DETAILED DESIGN STUDY OF NORTH JAVA CORRIDOR FLYOVER PROJECT TANGGULANGIN FLYOVER - CONTRACT PACKAGE 3 ( PETERONGAN - TANGGULANGIN ) EAST JAVA PROVINCE | 1 : 200<br>1 : 1000 | SOIL IMPROVEMENT | TSB-045 |
| | Sign | Sign | Sign | APPROVED BY: Ir. HERRY VAZA M,Eng.Sc NIP. : 110038400 — Sign | | FULL SIZE A3 | | SHEET NO : 45 / 45 |
| | Date | Date | Date | Date | | | | |

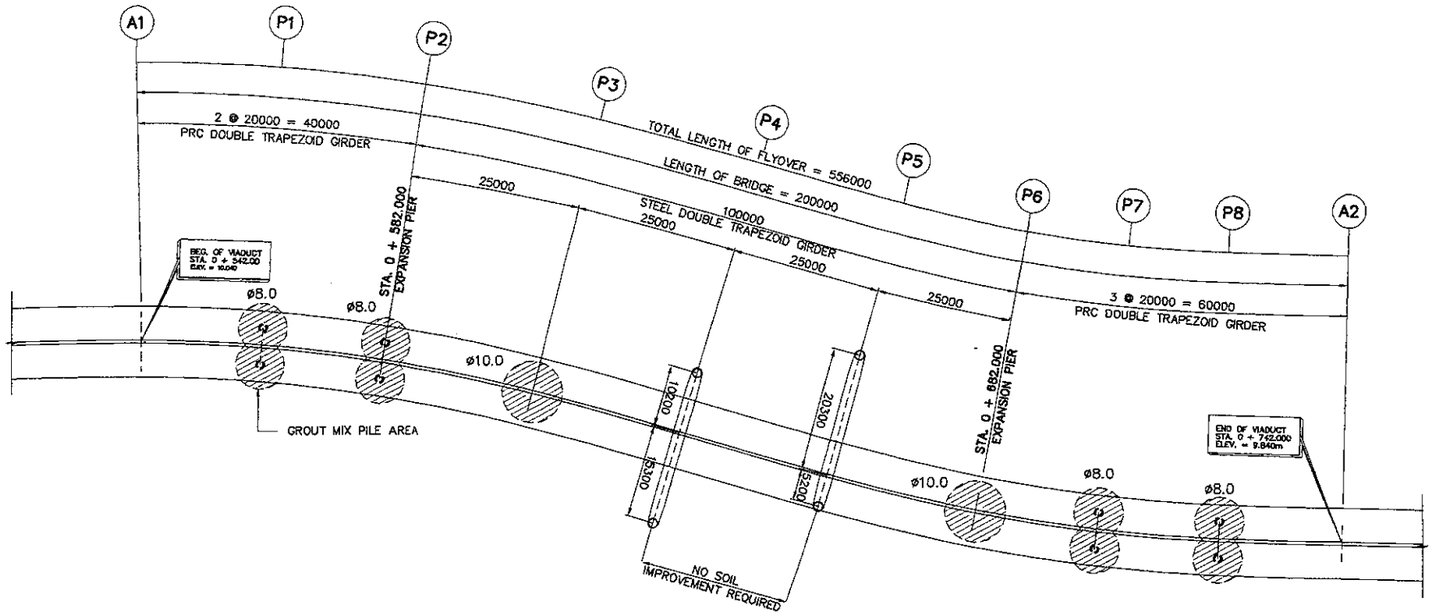


1 LAYOUT PLAN
SCALE : 1:1000

SCHEDULE OF SOIL TREATMENT

| PIER | ELEVATION TOP OF PILE | ELEVATION BOTTON OF GROUT MIX PILE | NOS OF GROUT MIX | VOLUME OF GROUT MIX PILE |
|---|---|---|---|---|
| | m | m | | m³ |
| P1 | 2.671 | −1.329 | 111 | 348.72 |
| P2 | 3.060 | −0.940 | 111 | 348.72 |
| P3 | 1.962 | −4.038 | 98 | 461.81 |
| P6 | 2.766 | −1.234 | 98 | 307.88 |
| P7 | 2.750 | −1.250 | 111 | 348.72 |
| P8 | 1.773 | −2.227 | 111 | 348.72 |
| | | TOTALS | 640 | 2164.557 |

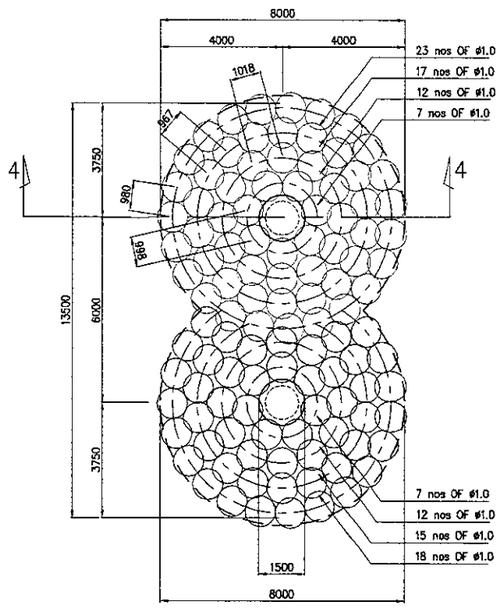


2 PLAN ON P1,P2,P7,P8
SCALE : 1:200

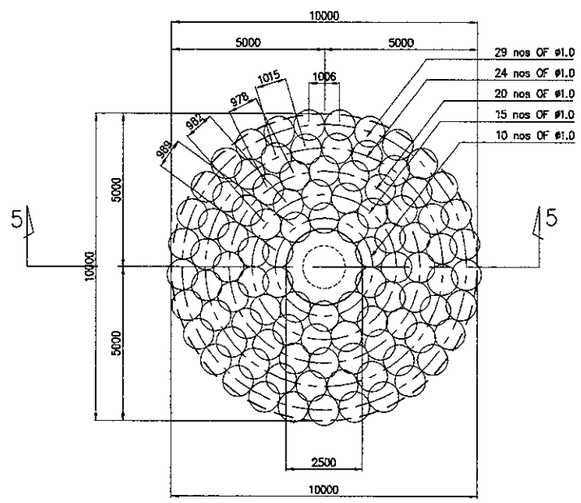


3 PLAN ON P3,P6
SCALE : 1:200

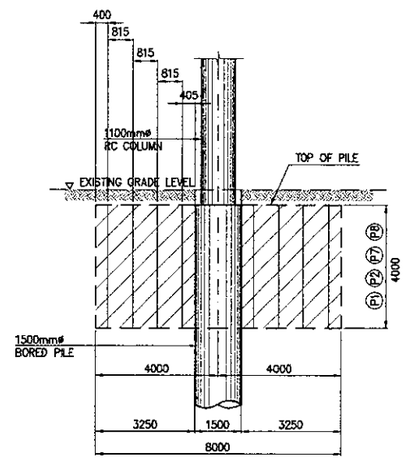


4 SECTION
SCALE : 1:200

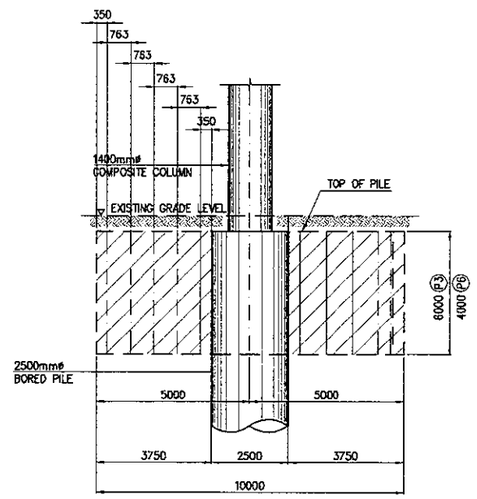


5 SECTION
SCALE : 1:200

NOTES :

1). FOR GENERAL NOTES REFER TO DRAWING NO. TGE 011
2). ALL DIMENSION ARE IN MM
3). ALL ELEVATION ARE IN M
4). GROUT MIX PILE SHALL BE ACHEIVED BY MEANS OF A GROUT MIX METHOD PROPOSED BY THE CONTRACTOR IN ACCORDANCE WITH THE SPECIFICATION AND APPROVED BY THE ENGINEER

PRINTED: OCT. 18, 2006

JAPAN INTERNATIONAL
COOPERATION AGENCY

DIRECTORATE GENERAL OF HIGHWAY
MINISTRY OF PUBLIC WORKS
REPUBLIC OF INDONESIA

# E. P. S. EMBANKMENT

KATAHIRA & ENGINEERS INTERNATIONAL

| JICA JAPAN INTERNATIONAL COOPERATION AGENCY / KEI KATAHIRA & ENGINEERS INTERNATIONAL | DESIGNED BY | CHECKED BY | SUBMITTED BY | REPUBLIC OF INDONESIA MINISTRY OF PUBLIC WORKS DIRECTORATE GENERAL OF HIGHWAYS | PROJECT AND LOCATION : | SCALE : | DRAWING TITLE : | DRAWING NO : |
|---|---|---|---|---|---|---|---|---|
| | Name T. OKUMURA | Name T. OKUMURA | Name M. KIUCHI | | DETAILED DESIGN STUDY OF NORTH JAVA CORRIDOR FLYOVER PROJECT TANGGULANGIN FLYOVER - CONTRACT PACKAGE 3 ( PETERONGAN -TANGGULANGIN ) EAST JAVA PROVINCE | NTS | NOTES FOR EPS EMBANKMENT | TEP-001 |
| | Sign | Sign | Sign | APPROVED BY Ir. HERRY VAZA M,Eng.Sc Sign | | | | SHEET NO : |
| | Date | Date | Date | NIP. : 110038400 Date | | FULL SIZE A3 | | 1 / 11 |

# NOTES FOR EPS EMBANKMENT

## NOTES :

1. EPS EMBANKMENT SHOWN IN THIS SET OF DRAWINGS SHALL COMPLY WITH THE REQUIREMENTS OF "STANDARD SPECIFICATIONS FOR HIGHWAY BRIDGES, DIVISION I AND II."

   THE CONTRACTOR MAY PROPOSE WALL TYPES OTHER THAN THAT SHOWN IN THE DRAWINGS AND APPROVED BY THE ENGINEER.

   DESIGN LIFE = 75 YEARS

2. MATERIALS

2.1 EPS
ALL EPS BLOCK GEOFOAM SHALL SATISFY THE PRODUCT FLAMMABILITY REQUIREMENTS SPECIFIED IN ASTM C 578.

EACH EPS BLOCK SHALL MEET DIMENSIONAL TOLERANCES, THE THICKNESS, WIDTH AND LENGTH. DIMENSIONS OF AN EPS BLOCK ARE DEFINED FROM MANUFACTURERS SPECIFICATIONS & SHOULD NOT DEVIATE FROM THE THEORETICAL DIMENSIONS BY MORE THAN 0.5 PERCENT.

2.2 PRECAST CONCRETE PANELS
28 DAYS COMPRESSIVE STRENGTH OF CONCRETE = 30 MPa

THE EXTERIOR FACE OF THE PANELS MUST BE UNIFORM AND MUST NOT SHOW SIGNIFICANT VARIATION FROM ONE PANEL TO ANOTHER. PANEL SHOULD CONFORM TO THE DIMENSIONS SHOWN AND BE FREE OF HONEYCOMBS, STRAIN OR DEEP CRACK IN THE FACE.

2.3 STEEL ANCHORAGE BARS
STEEL BARS SHALL BE HOT DIPPED GALVANIZED IN ACCORDANCE WITH AASHTO REQUIREMENTS.

2.4 JOINT FILLER
FILLER FOR VERTICAL JOINTS SHALL BE FLEXIBLE OPEN CELL POLYURETHANE FOAM STRIPS OF 40mm SQURE CROSS SECTION OR EQUIVALENT. THE VERTICAL JOINT FILLER SHALL BE ENCLOSED WITH GEOTEXTILE MEMBRANE AS SHOWN IN THE DRAWINGS. HORIZONTAL JOINT FILLER SHALL BE RESIN BONDED CORK FILLER BOARD CONFORMING TO ASTM D 1752 AND RUBBER PAD WITH SHORE HARDNESS OF 85 +0 −5.

2.5 CONCRETE LEVELING PAD
CONCRETE LEVELING PAD SHALL HAVE A 28TH DAY COMPRESSIVE STRENGTH OF 21MPa.

2.6 REINFORCED CONCRETE SLABS
REFERRED TO AS " LOAD DISTRIBUTUION SLAB " SHALL BE PROVIDED ACROSS THE TOP OF THE EPS BLOCKS IN LAYERS AS SHOWN IN THE DRAWINGS.

STRUCTURAL CONNECTION POINT FOR SIDE−COVER SYSTEM SHALL BE INTEGRATED WITH THE REINFORCED CONCRETE SLABS. IF IT IS NECESSARY, THE TOP LAYER OF LOAD DISTRIBUTION SLAB CAN BE USED AS ANCHORAGE FOR SAFETY BARRIERS, SIGNAGE AND LIGHTING.

3. ALLOWABLE SOIL BEARING CAPACITY

THE CONTRACTOR SHALL VERIFY THAT THE ALLOWABLE SOIL BEARING CAPACITY AT FOUNDATION LEVEL SHALL BE SUFFICIENT FOR EPS.

4. FOUNDATION TREATMENT

THE CONTRACTOR SHALL PREPARE THE FOUNDATION FOR EPS LIGHTWEIGHT EMBANKMENT IN ACCORDANCE WITH THE PLANS AND SHALL VERIFY IF THE EXISTING FOUNDATION IS SUITABLE TO SUPPORT THE EPS IN THE AREAS WHERE EXCAVATION OF FOUNDATION MATERIALS IS NECESSARY.THE CONTRACTOR SHALL PERFORM SUCH EXCAVATION TO THE LIMITS SHOWN IN THE DRAWINGS. THE EXCAVATED MATERIALS SHALL BE REPLACED WITH STRUCTURE BACKFILL MATERIAL MEETING THE REQUIREMENTS OF THE EARTH RETAINING SYTEM.

5. CONSTRUCTION

5.1 THE EPS LIGHTWEIGHT EMBANKMENT SHALL BE CONSTRUCTED IN ACCORDANCE WITH ASTM REQUIREMENTS OR RECOMMENDED BY THE MANUFACTURER / SUPPLIER.

THE CONTRACTOR SHALL SUBMIT FOR THE APPROVAL OF THE ENGINEER, WORKING PLAN AND DRAWINGS OF CONSTRUCTION METHOD, SEQUENCE, SAFETY AND QUALITY ASSURANCE.

5.2 BEFORE INSTALLATION BEGINS, THE EXISTING GROUND SHALL BE CLEARED PRIOR TO PLACING OF SAND BEDDING LAYER WHERE NECESSARY, EPS BLOCKS SHALL BE PLACED SO THAT ALL VERTICAL AND HORIZONTAL JOINTS BETWEEN BLOCKS ARE TIGHT. SUCCESSIVE LAYERS OF EPS BLOCKS MUST BE ORIENTED PERPEDICULAR TO THE PREVIOUS LAYER WITH VERTICAL JOINTS OFFSET COMPLETELY INTACT.

6. PLACEMENT OF EPS BLOCK GEOFOAM

6.1 EPS BLOCKS SHALL BE PLACED AT THE LOCATIONS SHOWN ON EITHER THE CONTRACT DRAWINGS OR APPROVED SHOP DRAWINGS SUBMITTED BY THE CONTRACTOR. PARTICULAR CARE IS REQUIRED IF EPS BLOCKS OF DIFFERENT DENSITY/UNIT WEIGHT ARE TO BE USED ON THE PROJECT.

6.2 EPS BLOCKS SHALL BE PLACED SO THAT ALL VERTICAL AND HORIZONTAL JOINTS BETWEEN BLOCKS ARE TIGHT.

6.3 THE SURFACES OF THE EPS BLOCKS SHALL NOT BE DIRECTLY TRAVERSED BY ANY VEHICLE OR CONSTRUCTIONEQUIPMENT DURING OR AFTER PLACEMENT OF THE BLOCKS.

6.4 WITH THE EXCEPTION OF SAND BAGS OR SIMILAR "SOFT" WEIGHTS USED TO TEMPORARILY RESTRAIN EPS BLOCKS AGAINST WIND, NO CONSTRUCTION MATERIAL OTHER THAN THAT SHOWN ON THE DRAWINGS SHALL BE PLACED OR STOCKPILED ON THE EPS BLOCKS.

6.5 AT NO TIME SHALL HEAT OR OPEN FLAME BE USED NEAR THE EPS BLOCKS SO AS TO CAUSE MELTING OR COMBUSTION OF THE EPS.

6.6 THE FINAL SURFACE OF THE EPS BLOCKS SHALL BE COVERED AS SHOWN ON THE CONTRACT DRAWINGS. CARE SHALL BE EXERCISED DURING PLACEMENT OF THE COVER MATERIAL SO AS NOT TO CAUSE ANY DAMAGE TO THE EPS BLOCKS.

7. PAVEMENT CONSTRUCTION

7.1 THE PAVEMENT SYSTEM IS DEFINED FOR THE PURPOSES OF THIS STANDARD AS ALL MATERIAL PLACED ON THE EPS BLOCKS WITHIN THE LIMITS OF THE ROADWAY, INCLUDING ANY SHOULDERS.

7.2 THE PAVEMENT SYSTEM SHALL BE CONSTRUCTED ABOVE THE EPS BLOCK GEOFOAM AS SHOWN ON THE CONTRACT DRAWINGS. SPECIFICATIONS COVERING CONSTRUCTION OF THE PAVEMENT SYSTEM ARE GIVEN ELSEWHERE IN THE CONTRACT DOCUMENTS.

7.3 NO VEHICLES OR CONSTRUCTION EQUIPMENT SHALL TRAVERSE DIRECTLY ON THE EPS BLOCKS OR ON ANY SEPARATION MATERIAL PLACED BETWEEN THE EPS BLOCKS AND THE PAVEMENT SYSTEM. SOIL OR AGGREGATE FOR THE PAVEMENT SYSTEM LAYERS SHALL BE PUSHED ONTO THE EPS BLOCKS OR SEPARATION LAYER USING APPROPRIATE EQUIPMENT SUCH AS A BULLDOZER OR A FRONT−END LOADER. A MINIMUM OF 300 MM (12 IN.) OF SOIL OR AGGREGATE SHALL COVER THE TOP OF THE EPS BLOCKS OR SEPARATION LAYER BEFORE COMPACTION COMMENCES.

8. STORAGE

THE EPS BLOCKS SHALL BE BALLASTED AND/OR SECURED DURING STORAGE AND PLACEMENT. THE BLOCK SHALL BE COVERED WITH A LIGHT−COLORED TARP IF STORED OUTDOORS LONGER THAN TWO WEEKS. EPS SHALL NOT BE EXPOSED TO HYDROCARBONS OR PETROLEUM BASED SOLVENTS SUCH AS GASOLINE, DIESEL FUEL, CONCRETE CURING COMPOUND, COAL TAR PITCH AND ASPHALT/MASTIC COMPOUNDS. EPS IS COMBUSTIBLE AND SHALL NOT BE EXPOSED TO FLAME OR OTHER IGNITION SOURCED.

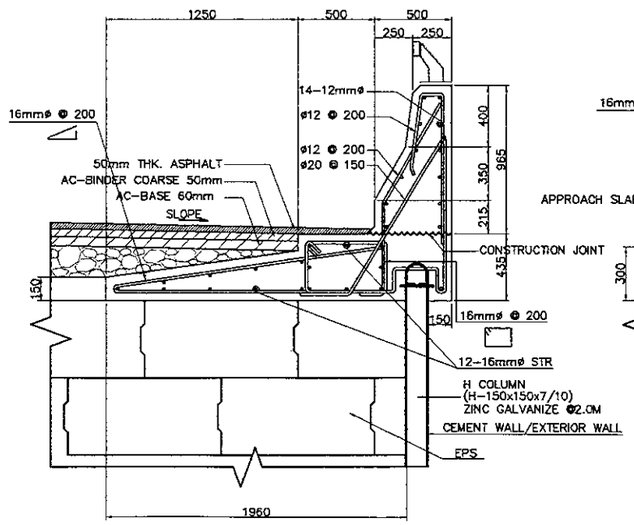


STANDARD DETAIL OF CONCRETE RAILING AT EPS EMBANKMENT

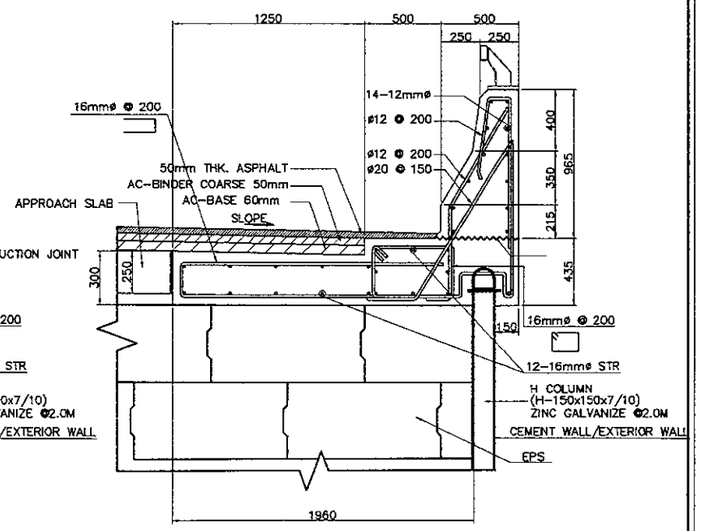


STANDARD DETAIL OF CONCRETE RAILING AT APPROACH SLAB

| JAPAN INTERNATIONAL COOPERATION AGENCY<br>KATAHIRA & ENGINEERS INTERNATIONAL | DESIGNED BY | CHECKED BY | SUBMITTED BY | REPUBLIC OF INDONESIA<br>MINISTRY OF PUBLIC WORKS<br>DIRECTORATE GENERAL OF HIGHWAYS | PROJECT AND LOCATION : | SCALE : | DRAWING TITLE : | DRAWING NO : |
|---|---|---|---|---|---|---|---|---|
| | Name: T. OKUMURA | Name: T. OKUMURA | Name: M. KIUCHI | | DETAILED DESIGN STUDY OF<br>NORTH JAVA CORRIDOR FLYOVER PROJECT<br>TANGGULANGIN FLYOVER - CONTRACT PACKAGE 3<br>( PETERONGAN -TANGGULANGIN )<br>EAST JAVA PROVINCE | 1 : 200 | PLAN & ELEVATION OF EPS<br>EMBANKMENT (ABUTMENT A1)<br>1 OF 2 | TEP-002 |
| | Sign | Sign | Sign | APPROVED BY: Ir. HERRY VAZA M,Eng.Sc<br>NIP. : 110038400 | | | | SHEET NO : |
| | Date | Date | Date | Sign / Date | | FULL SIZE A3 | | 02 / 11 |

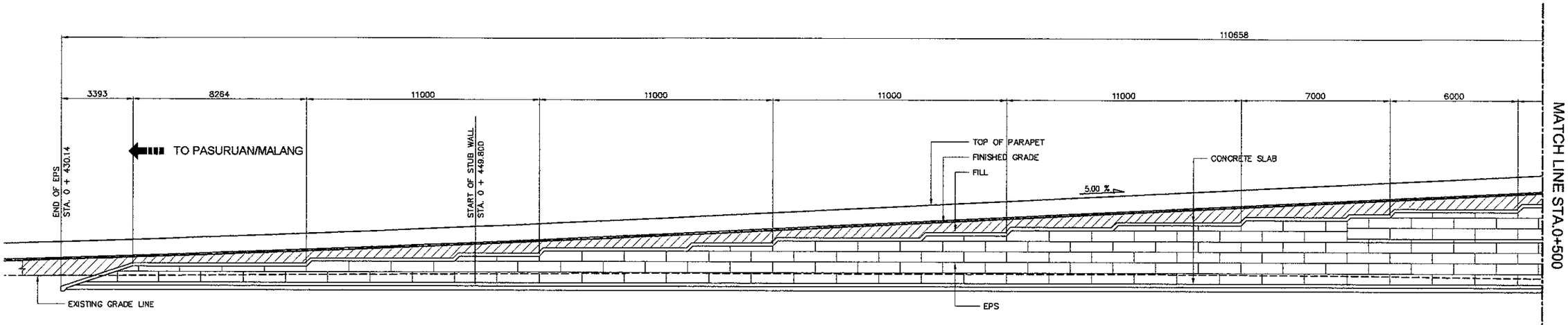


A - ELEVATION
SCALE 1:200

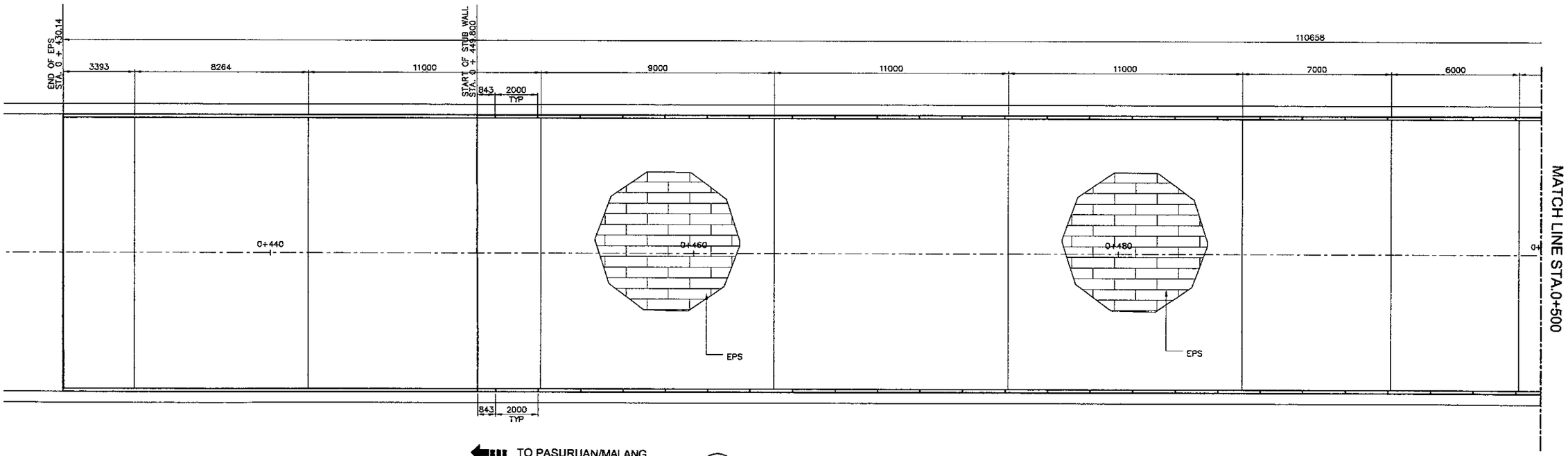


TO PASURUAN/MALANG

B - PLAN
SCALE 1:200

1 - PLAN & ELEV. OF EPS EMBANKMENT (ABUT. A1)
SCALE 1:200

| JAPAN INTERNATIONAL COOPERATION AGENCY<br>KATAHIRA & ENGINEERS INTERNATIONAL | DESIGNED BY | CHECKED BY | SUBMITTED BY | REPUBLIC OF INDONESIA<br>MINISTRY OF PUBLIC WORKS<br>DIRECTORATE GENERAL OF HIGHWAYS | PROJECT AND LOCATION : | SCALE : | DRAWING TITLE : | DRAWING NO : |
|---|---|---|---|---|---|---|---|---|
| | Name | Name T. OKUMURA | Name M. KIUCHI | | DETAILED DESIGN STUDY OF<br>NORTH JAVA CORRIDOR FLYOVER PROJECT<br>TANGGULANGIN FLYOVER - CONTRACT PACKAGE 3<br>( PETERONGAN -TANGGULANGIN )<br>EAST JAVA PROVINCE | 1 : 200 | PLAN & ELEVATION OF EPS<br>EMBANKMENT (ABUTMENT A1)<br>2 OF 2 | TEP-003 |
| | Sign | Sign | Sign | APPROVED BY Ir. HERRY VAZA M,Eng.Sc<br>NIP. : 110038400 Sign | | | | SHEET NO : |
| | Date | Date | Date | Date | | FULL SIZE A3 | | 03 / 11 |

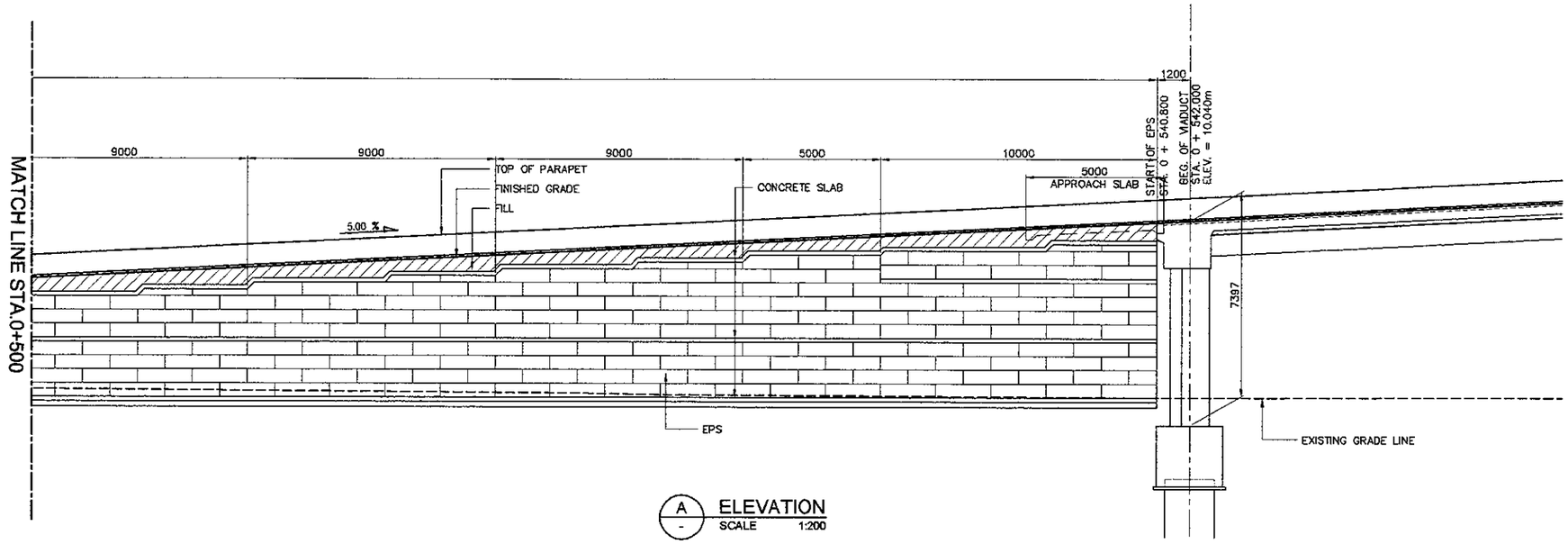


A - ELEVATION
SCALE 1:200

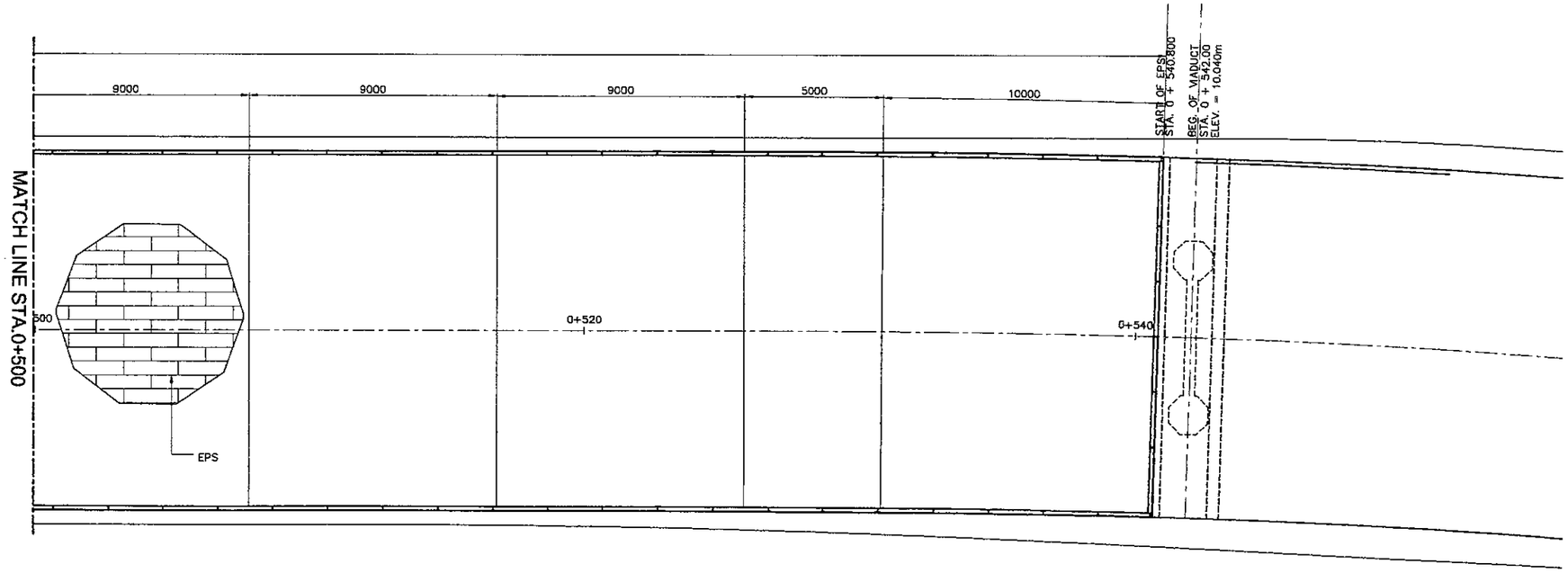


B - PLAN
SCALE 1:200

1 - PLAN & ELEV. OF EPS EMBANKMENT (ABUT. A1)
SCALE 1:200

| JAPAN INTERNATIONAL COOPERATION AGENCY<br>KATAHIRA & ENGINEERS INTERNATIONAL | DESIGNED BY | | CHECKED BY | | SUBMITTED BY | | REPUBLIC OF INDONESIA<br>MINISTRY OF PUBLIC WORKS<br>DIRECTORATE GENERAL OF HIGHWAYS | PROJECT AND LOCATION : | SCALE : | DRAWING TITLE : | DRAWING NO : |
|---|---|---|---|---|---|---|---|---|---|---|---|
| | Name | R. UENO | Name | T. OKUMURA | Name | M. KIUCHI | | DETAILED DESIGN STUDY OF<br>NORTH JAVA CORRIDOR FLYOVER PROJECT<br>TANGGULANGIN FLYOVER - CONTRACT PACKAGE 3<br>( PETERONGAN -TANGGULANGIN )<br>EAST JAVA PROVINCE | 1 : 100 | SECTION & DETAIL OF EPS WALL &<br>STUBWALL AT ABUTMENT A1 SIDE | TEP-004 |
| | Sign | | Sign | | Sign | | APPROVED BY: Ir. HERRY VAZA M,Eng.Sc<br>NIP. : 110038400 | | | | SHEET NO : |
| | Date | | Date | | Date | | Sign / Date | | FULL SIZE A3 | | 04/ 11 |

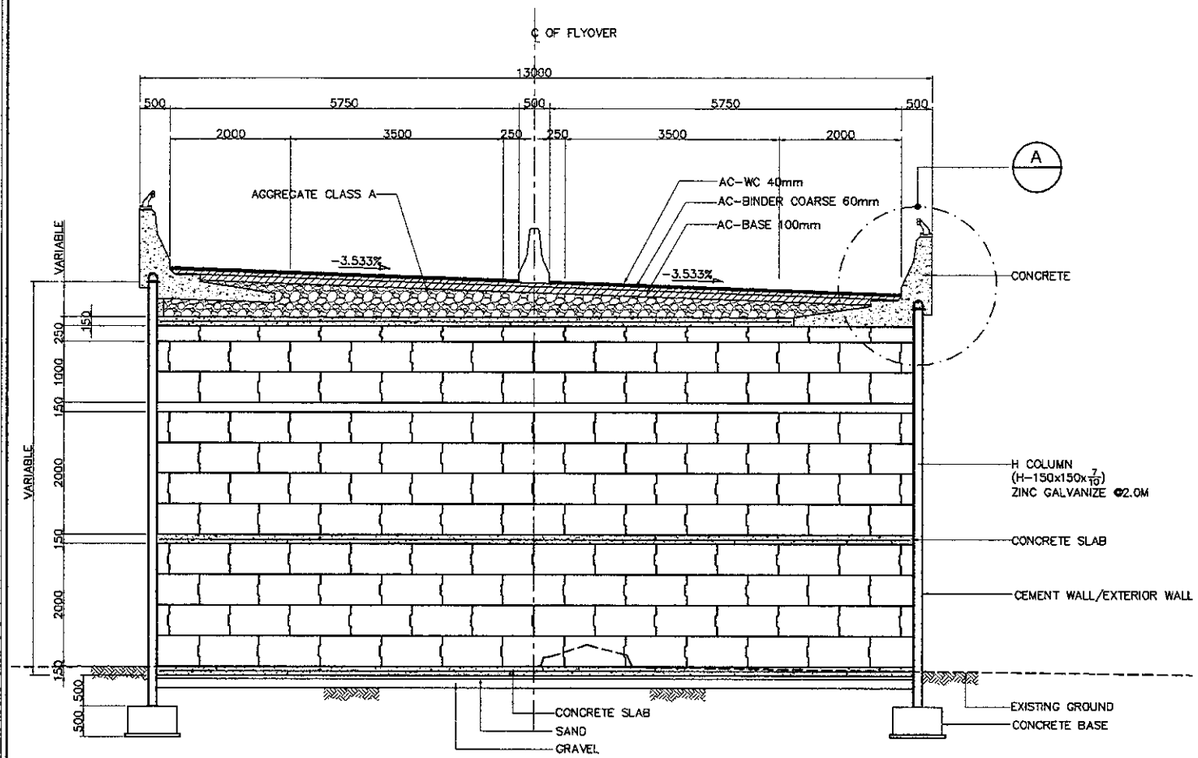


1 SECTION AT EPS WALL (STA. 0+540.000)
SCALE 1:100

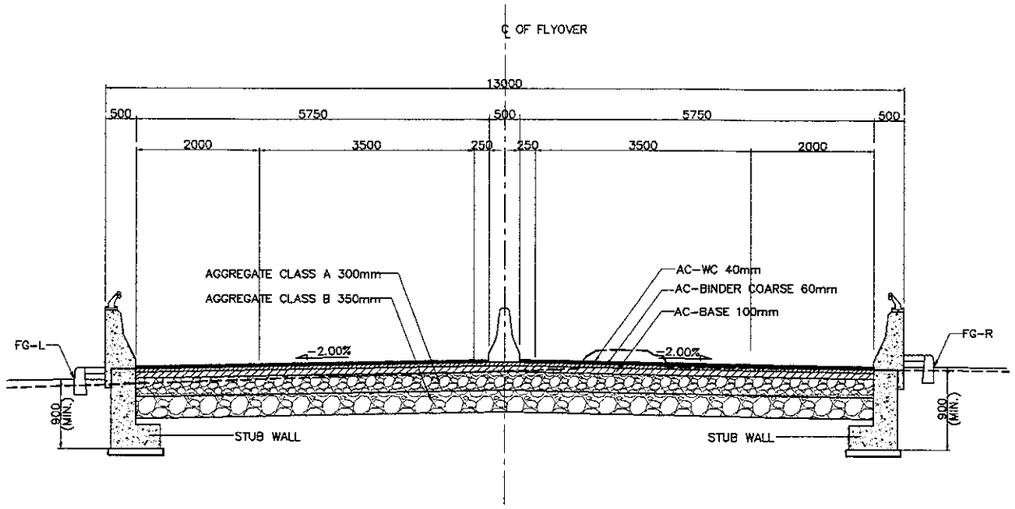


3 SECTION AT STUB WALL (STA. 0+400.000)
SCALE 1:100

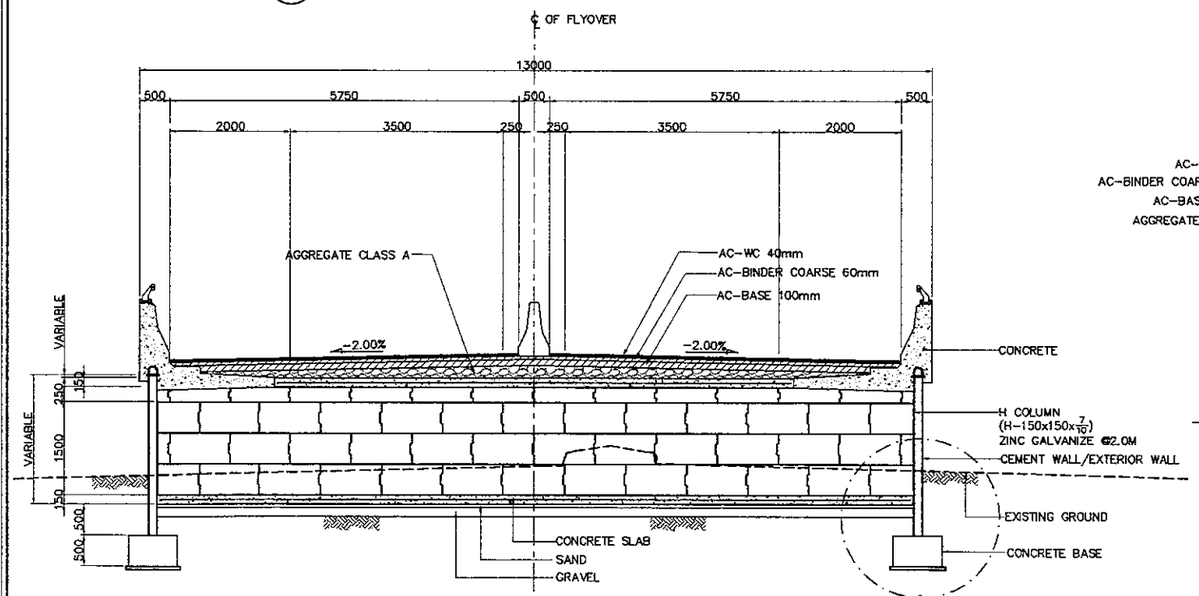


2 SECTION AT EPS WALL (STA. 0+460.000)
SCALE 1:100

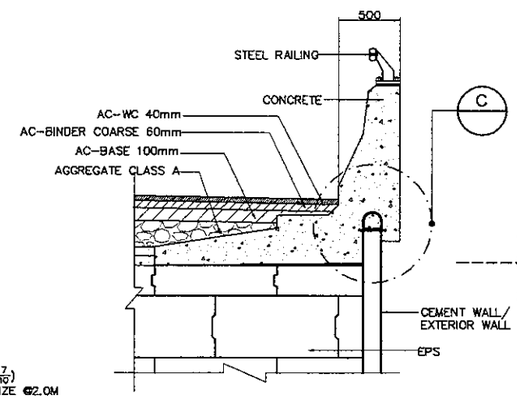


A DETAIL
SCALE 1:50

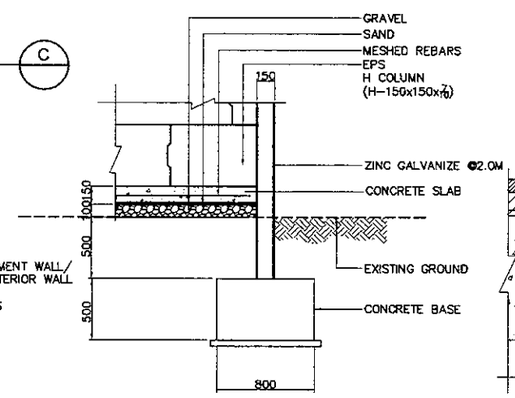


B DETAIL
SCALE 1:50

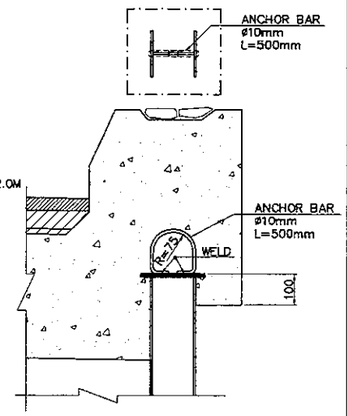


C DETAIL
SCALE 1:20

| JICA JAPAN INTERNATIONAL COOPERATION AGENCY<br>KEI KATAHIRA & ENGINEERS INTERNATIONAL | DESIGNED BY: Name T. OKUMURA, Sign, Date | CHECKED BY: Name T. OKUMURA, Sign, Date | SUBMITTED BY: Name M. KIUCHI, Sign, Date | REPUBLIC OF INDONESIA<br>MINISTRY OF PUBLIC WORKS<br>DIRECTORATE GENERAL OF HIGHWAYS<br>APPROVED BY: Ir. HERRY VAZA M,Eng.Sc, NIP. : 110038400, Sign, Date | PROJECT AND LOCATION :<br>DETAILED DESIGN STUDY OF<br>NORTH JAVA CORRIDOR FLYOVER PROJECT<br>TANGGULANGIN FLYOVER - CONTRACT PACKAGE 3<br>( PETERONGAN -TANGGULANGIN )<br>EAST JAVA PROVINCE | SCALE :<br>1 : 200<br>FULL SIZE A3 | DRAWING TITLE :<br>PLAN & ELEVATION OF EPS EMBANKMENT (ABUTMENT A2)<br>1 OF 2 | DRAWING NO :<br>TEP-005<br>SHEET NO :<br>05 / 11 |
|---|---|---|---|---|---|---|---|---|

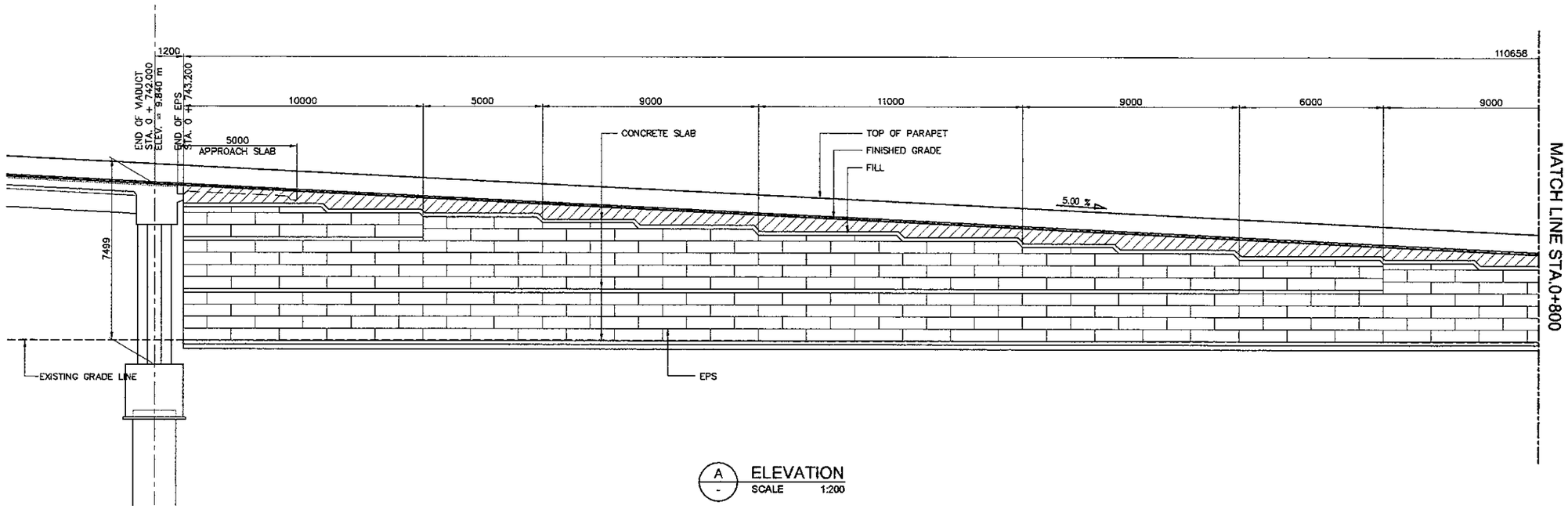


A - ELEVATION
SCALE 1:200

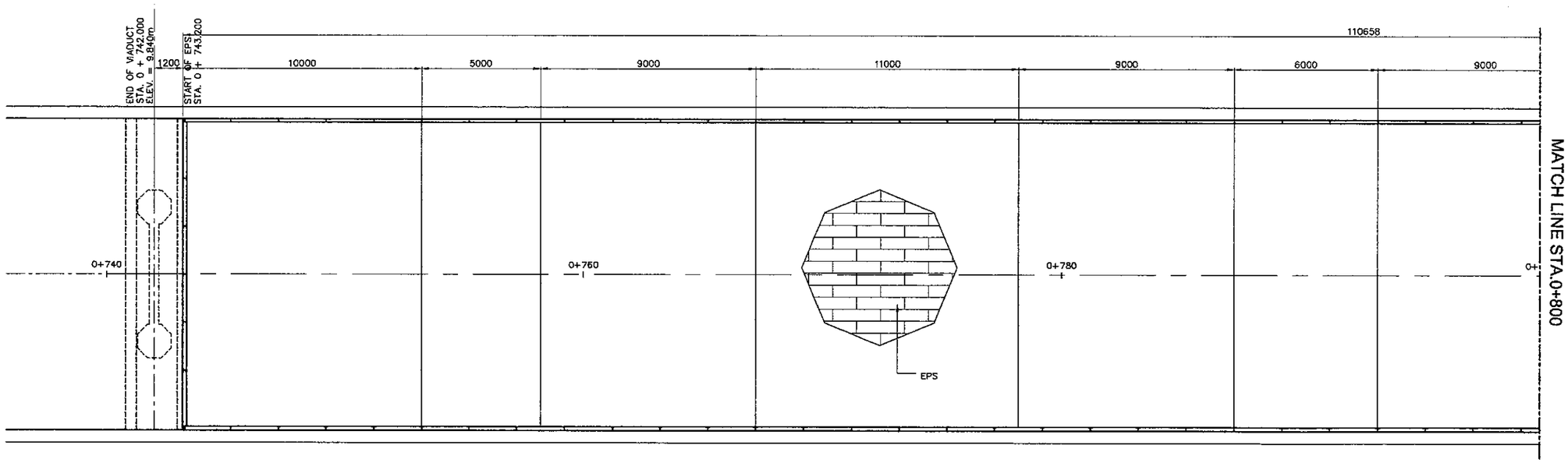


B - PLAN
SCALE 1:200

1 - PLAN & ELEV. OF EPS EMBANKMENT (ABUT. A2)
SCALE 1:200

| JAPAN INTERNATIONAL COOPERATION AGENCY<br>KATAHIRA & ENGINEERS INTERNATIONAL | DESIGNED BY | CHECKED BY | SUBMITTED BY | REPUBLIC OF INDONESIA<br>MINISTRY OF PUBLIC WORKS<br>DIRECTORATE GENERAL OF HIGHWAYS | PROJECT AND LOCATION : | SCALE : | DRAWING TITLE : | DRAWING NO : |
|---|---|---|---|---|---|---|---|---|
| | Name: T. OKUMURA | Name: T. OKUMURA | Name: M. KIUCHI | | DETAILED DESIGN STUDY OF<br>NORTH JAVA CORRIDOR FLYOVER PROJECT<br>TANGGULANGIN FLYOVER - CONTRACT PACKAGE 3<br>( PETERONGAN -TANGGULANGIN )<br>EAST JAVA PROVINCE | 1 : 200 | PLAN & ELEVATION OF EPS<br>EMBANKMENT (ABUTMENT A2)<br>2 OF 2 | TEP-006 |
| | Sign | Sign | Sign | APPROVED BY: Ir. HERRY VAZA M.Eng.Sc | | | | SHEET NO : |
| | Date | Date | Date | NIP. : 110038400 / Sign / Date | | FULL SIZE A3 | | 06 / 11 |

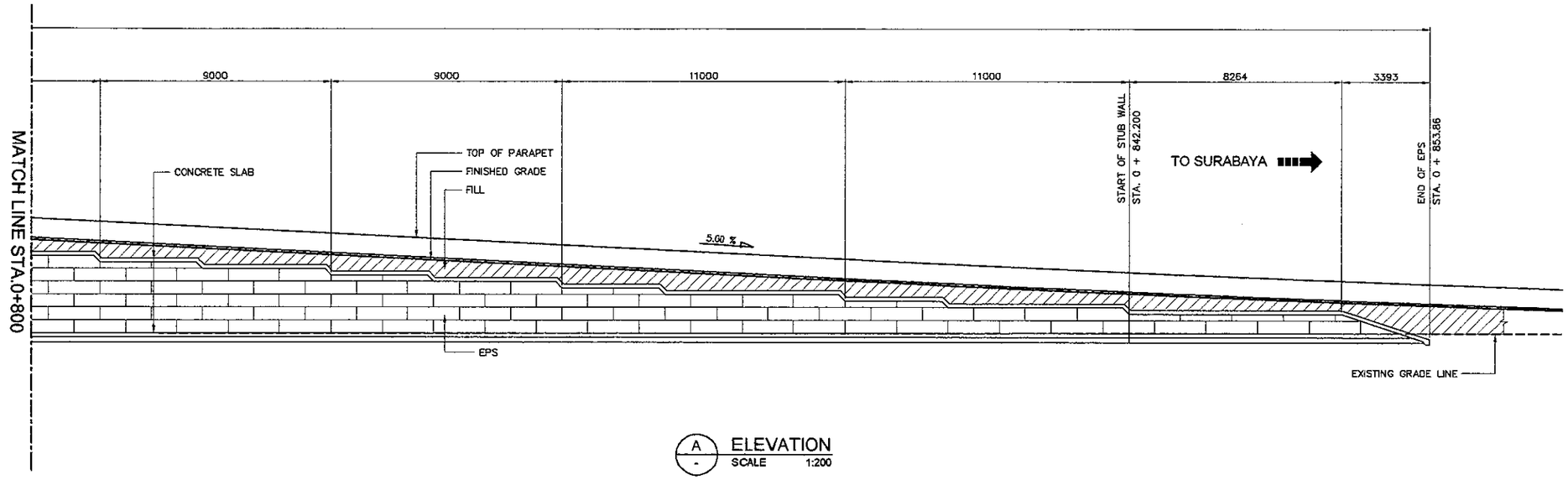


A - ELEVATION
SCALE 1:200

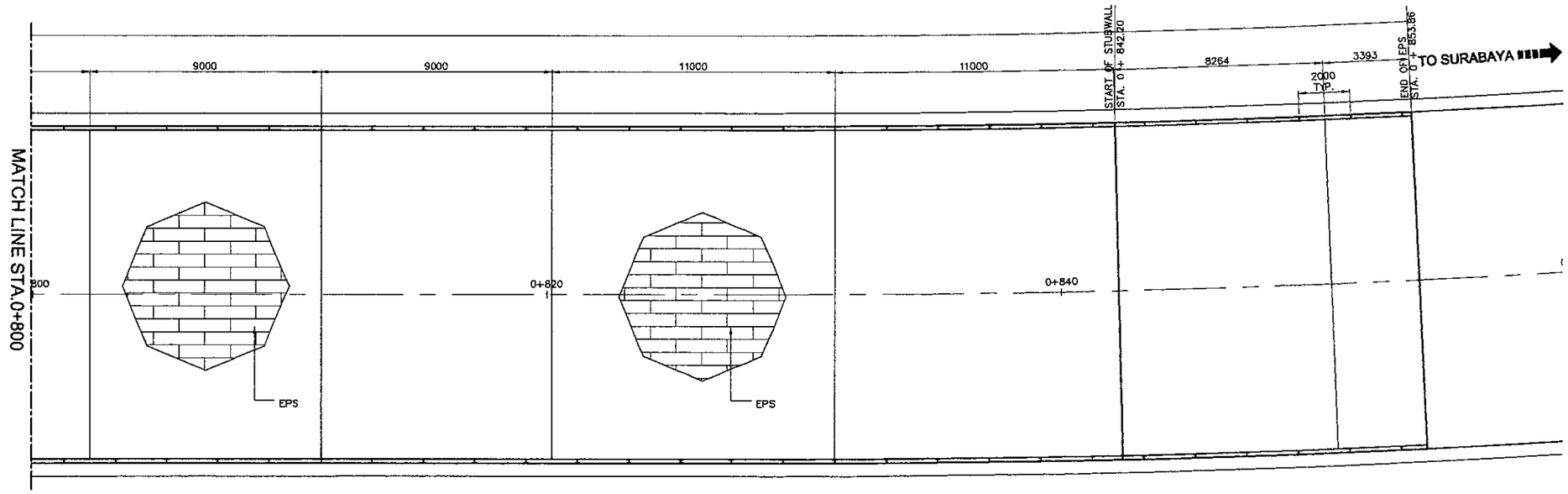


B - PLAN
SCALE 1:200

1 - PLAN & ELEV. OF EPS EMBANKMENT (ABUT. A2)
SCALE 1:200

| JAPAN INTERNATIONAL COOPERATION AGENCY<br>KATAHIRA & ENGINEERS INTERNATIONAL | DESIGNED BY | CHECKED BY | SUBMITTED BY | REPUBLIC OF INDONESIA<br>MINISTRY OF PUBLIC WORKS<br>DIRECTORATE GENERAL OF HIGHWAYS | PROJECT AND LOCATION : | SCALE : | DRAWING TITLE : | DRAWING NO : |
|---|---|---|---|---|---|---|---|---|
| | Name: R. UENO | Name: T. OKUMURA | Name: M. KIUCHI | | DETAILED DESIGN STUDY OF<br>NORTH JAVA CORRIDOR FLYOVER PROJECT<br>TANGGULANGIN FLYOVER - CONTRACT PACKAGE 3<br>( PETERONGAN -TANGGULANGIN )<br>EAST JAVA PROVINCE | 1 : 100 | SECTION & DETAIL OF EPS WALL & STUBWALL AT ABUTMENT A2 SIDE | TEP-007 |
| | Sign | Sign | Sign | APPROVED BY: Ir. HERRY VAZA M,Eng.Sc<br>NIP. : 110038400 | | | | SHEET NO : |
| | Date | Date | Date | Sign / Date | | FULL SIZE A3 | | 07 / 11 |

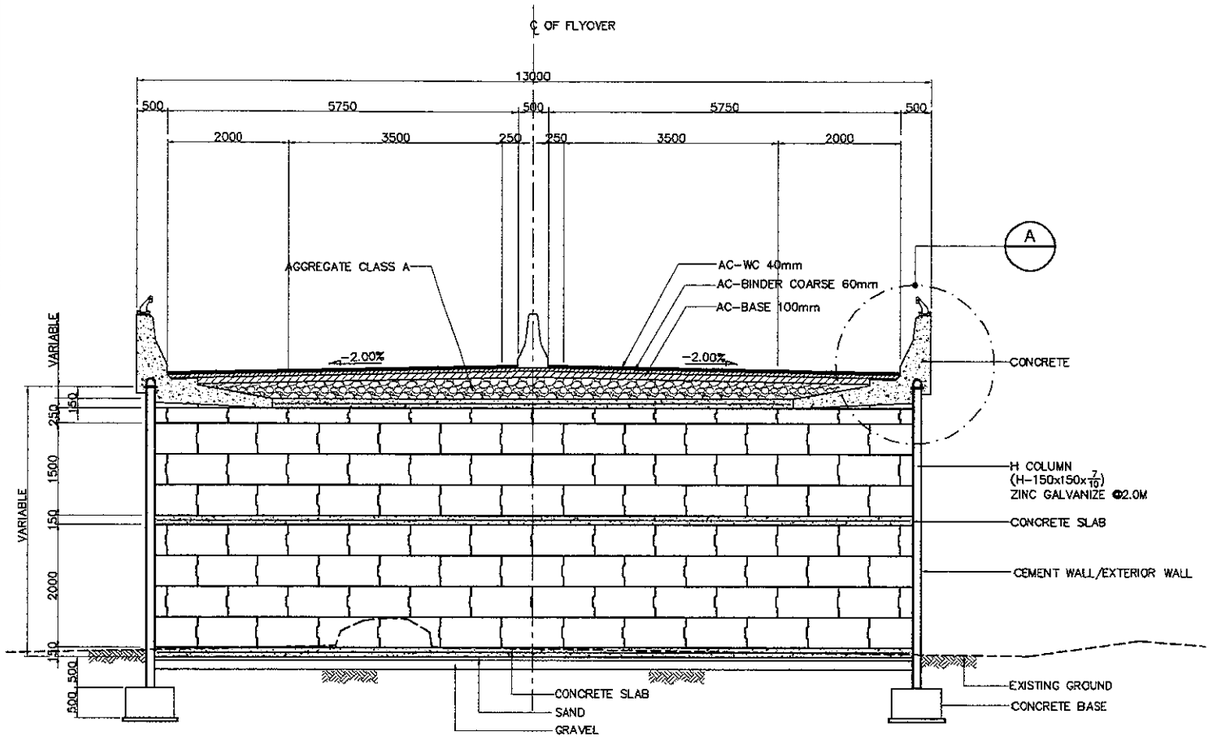


1 SECTION AT EPS WALL (STA. 0+780.000)
SCALE 1:100

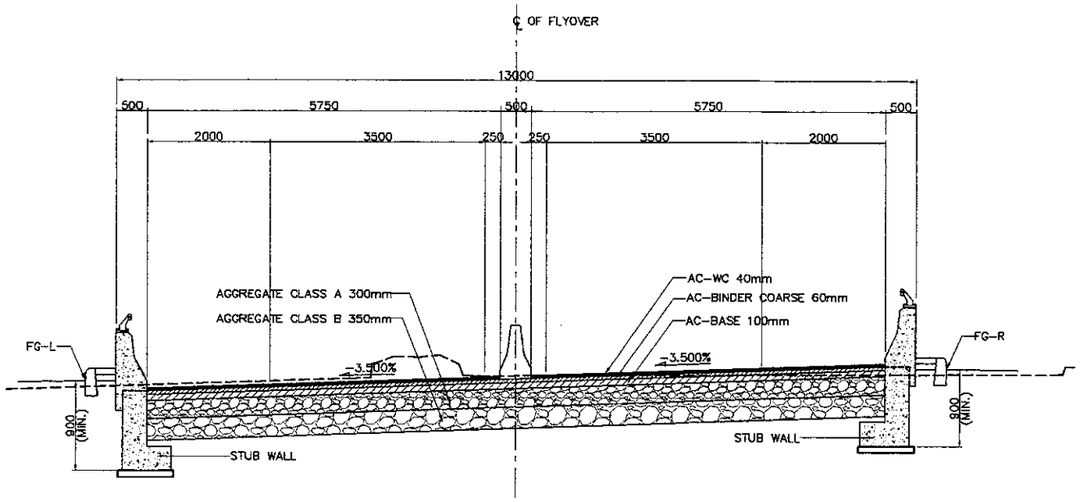


3 SECTION AT STUB WALL (STA. 0+900.000)
SCALE 1:100

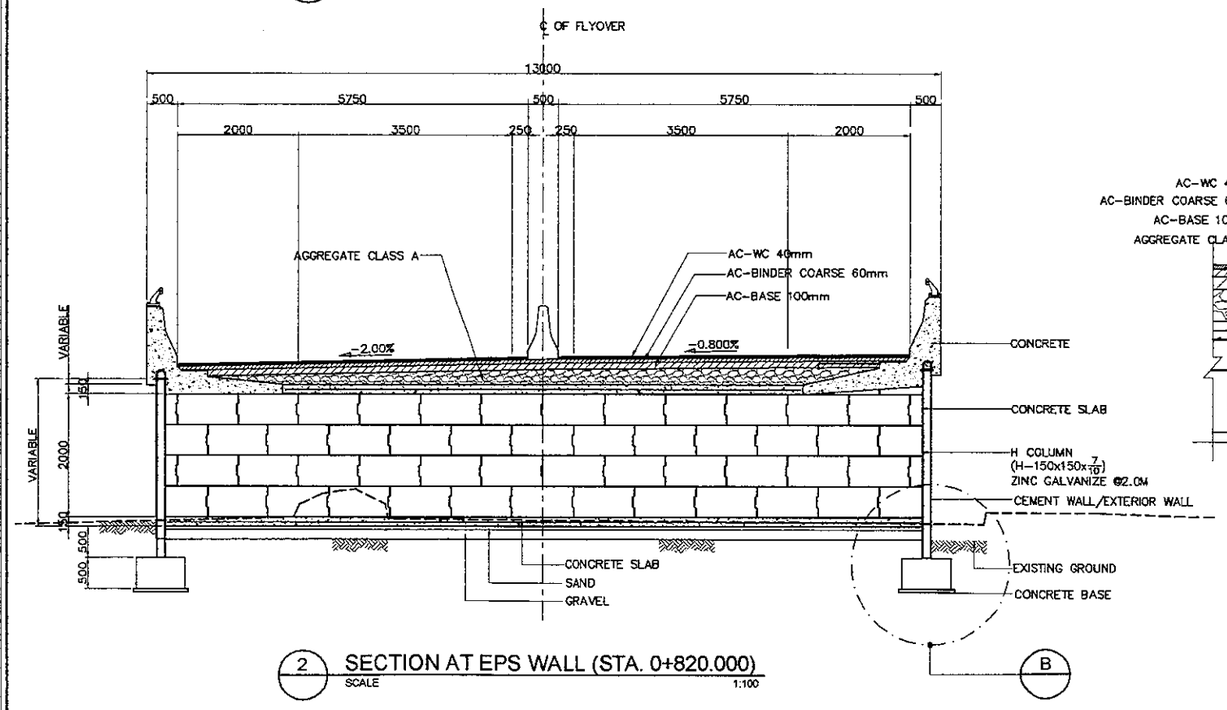


2 SECTION AT EPS WALL (STA. 0+820.000)
SCALE 1:100

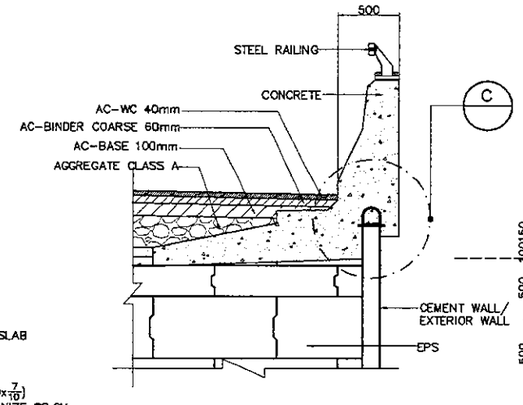


A DETAIL
SCALE 1:50

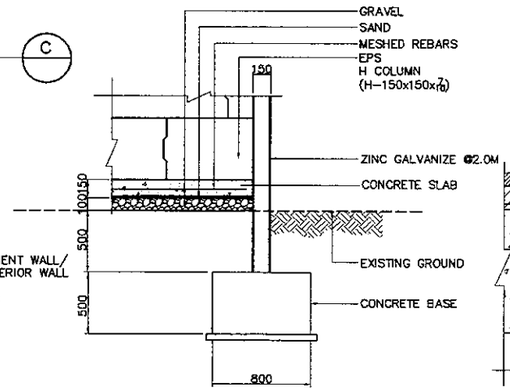


B DETAIL
SCALE 1:50

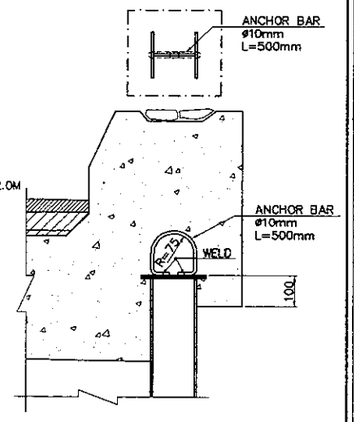


C DETAIL
SCALE 1:20

| JAPAN INTERNATIONAL COOPERATION AGENCY<br>KATAHIRA & ENGINEERS INTERNATIONAL | DESIGNED BY | CHECKED BY | SUBMITTED BY | REPUBLIC OF INDONESIA<br>MINISTRY OF PUBLIC WORKS<br>DIRECTORATE GENERAL OF HIGHWAYS | PROJECT AND LOCATION : | SCALE : | DRAWING TITLE : | DRAWING NO : |
|---|---|---|---|---|---|---|---|---|
| | Name: T. OKUMURA | Name: T. OKUMURA | Name: M. KIUCHI | | DETAILED DESIGN STUDY OF<br>NORTH JAVA CORRIDOR FLYOVER PROJECT<br>TANGGULANGIN FLYOVER - CONTRACT PACKAGE 3<br>( PETERONGAN -TANGGULANGIN )<br>EAST JAVA PROVINCE | AS SHOWN | TYPICAL DETAILS | TEP-008 |
| | Sign | Sign | Sign | APPROVED BY: Ir. HERRY VAZA M,Eng.Sc<br>NIP. : 110038400 | | | | SHEET NO : |
| | Date | Date | Date | Sign / Date | | FULL SIZE A3 | | 08 / 11 |

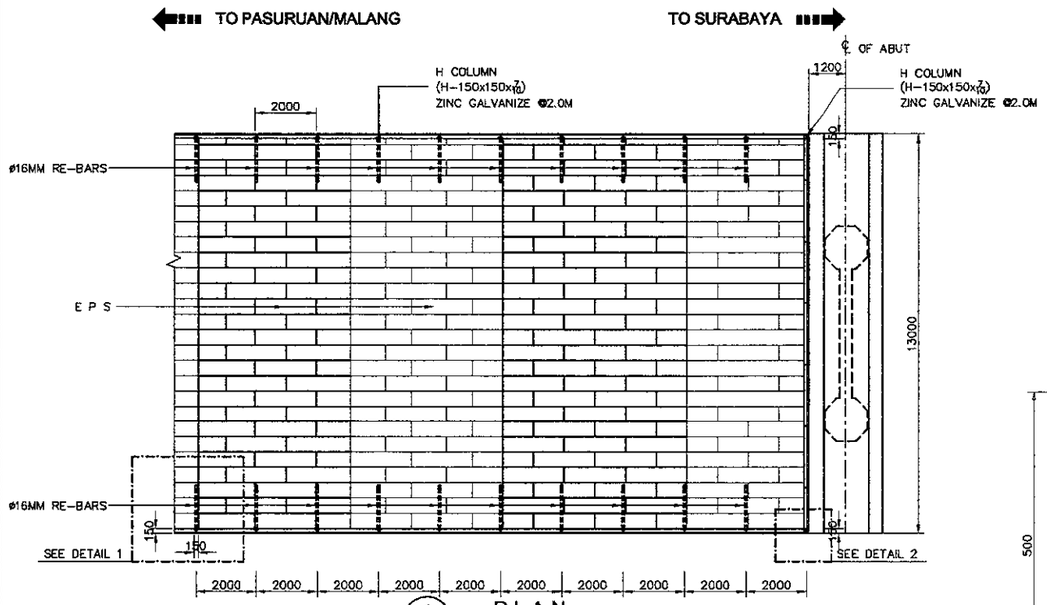


1 PLAN
SCALE 1:200

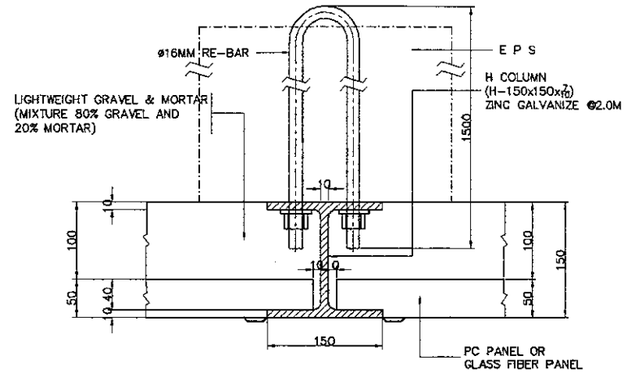


3 DETAIL 1
SCALE 1:8

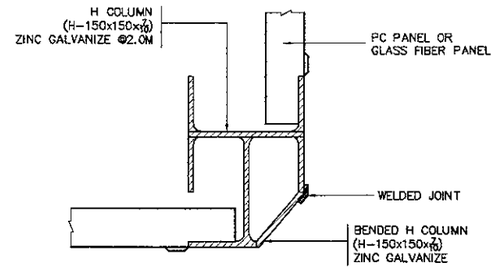


4 DETAIL 2
SCALE 1:8

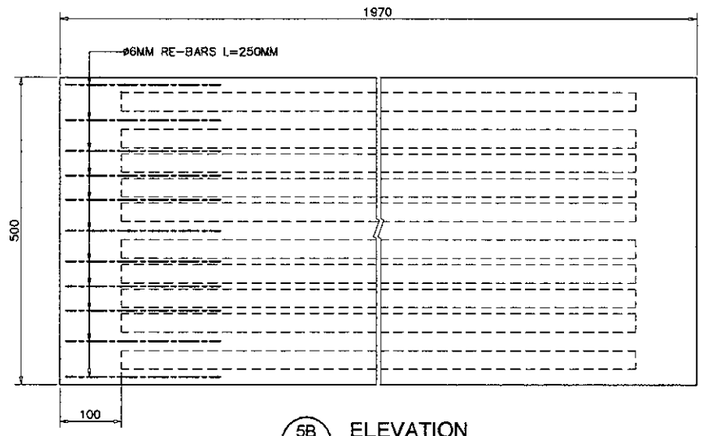


5B ELEVATION
SCALE 1:10

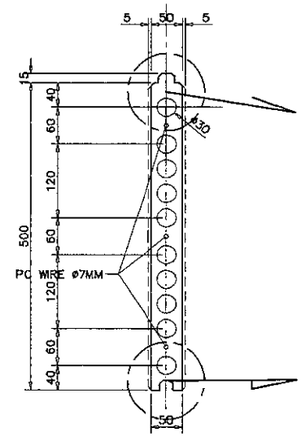


5C SECTION
SCALE 1:10

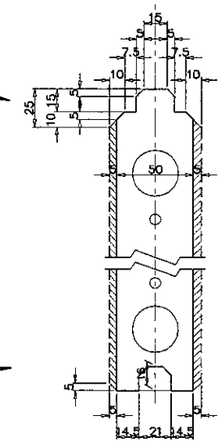

5C1 ENLARGE DETAIL
SCALE 1:4

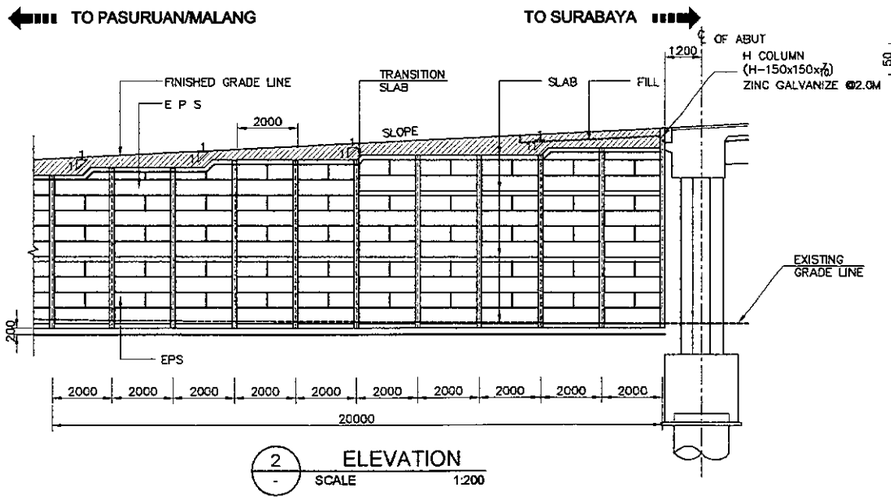


2 ELEVATION
SCALE 1:200

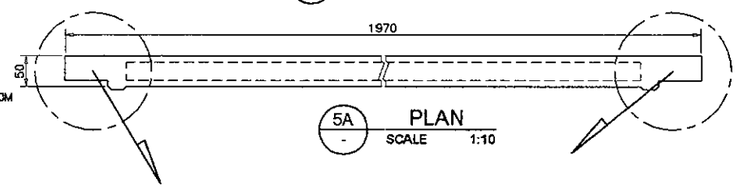


5A PLAN
SCALE 1:10

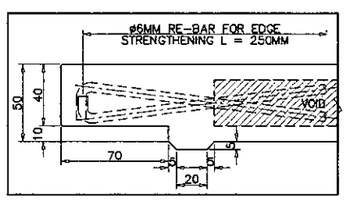


5A1 ENLARGE DETAIL
SCALE 1:4

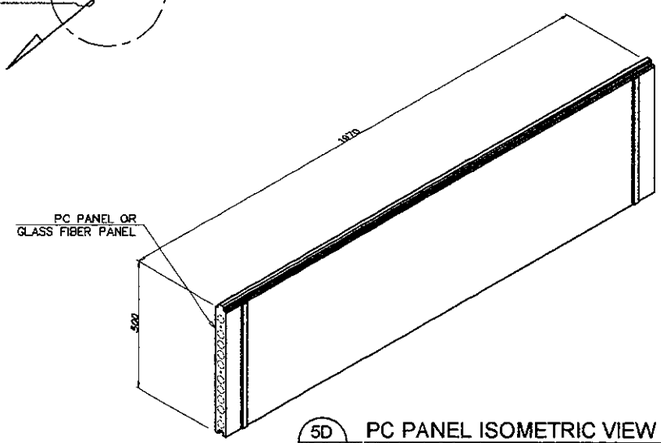


5D PC PANEL ISOMETRIC VIEW
SCALE 1:20

5 PC PANEL LAYOUT DETAILS
SCALE AS SHOWN

| JICA JAPAN INTERNATIONAL COOPERATION AGENCY / KEI KATAHIRA & ENGINEERS INTERNATIONAL | DESIGNED BY | CHECKED BY | SUBMITTED BY | REPUBLIC OF INDONESIA MINISTRY OF PUBLIC WORKS DIRECTORATE GENERAL OF HIGHWAYS | PROJECT AND LOCATION : | SCALE : | DRAWING TITLE : | DRAWING NO : |
|---|---|---|---|---|---|---|---|---|
| | Name T. OKUMURA | Name T. OKUMURA | Name M. KIUCHI | | DETAILED DESIGN STUDY OF NORTH JAVA CORRIDOR FLYOVER PROJECT TANGGULANGIN FLYOVER - CONTRACT PACKAGE 3 ( PETERONGAN -TANGGULANGIN ) EAST JAVA PROVINCE | AS SHOWN | ISOMETRIC VIEWS | TEP-009 |
| | Sign | Sign | Sign | APPROVED BY Ir. HERRY VAZA M,Eng.Sc NIP. : 110038400 Sign | | | | SHEET NO : |
| | Date | Date | Date | Date | | FULL SIZE A3 | | 09 / 11 |

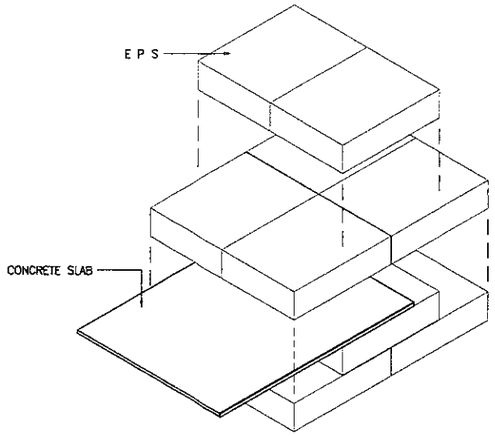


1 - EXPLODED
SCALE 1:40

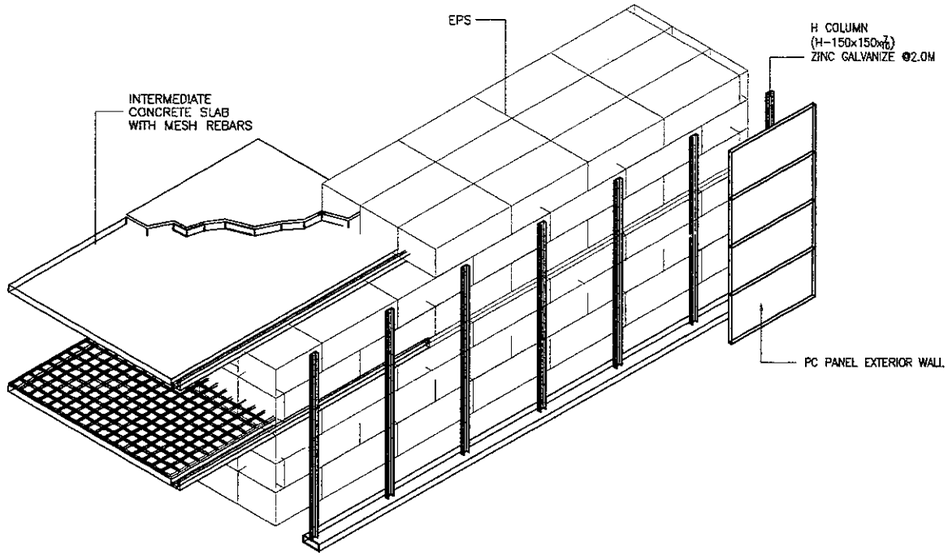


3 - EXPLODED
SCALE 1:40

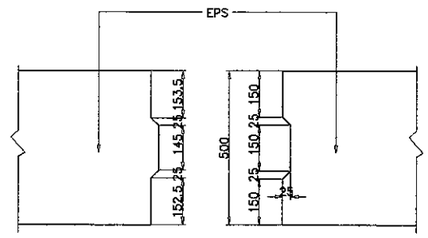


5 - JOINT DETAIL
SCALE 1:20

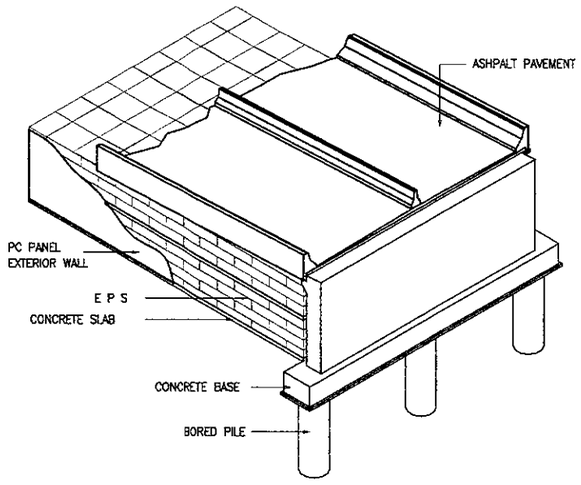


2 - ISOMETRIC
SCALE 1:40

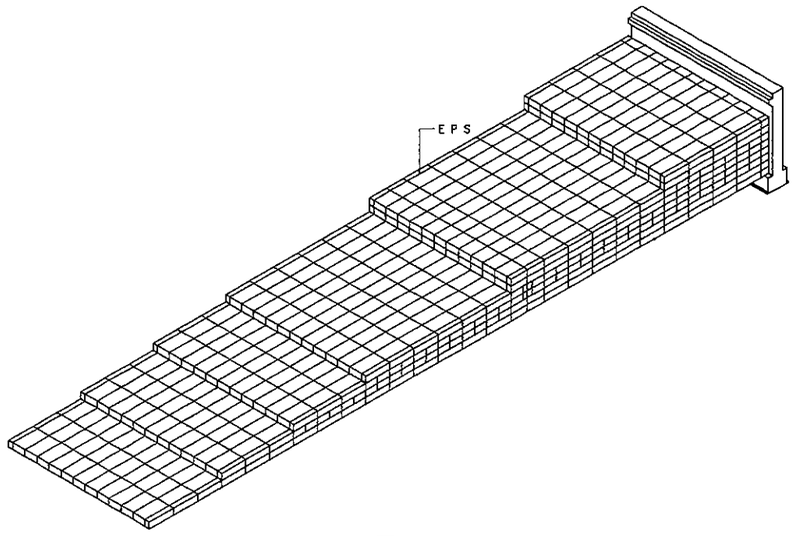


4 - ISOMETRIC
SCALE NTS

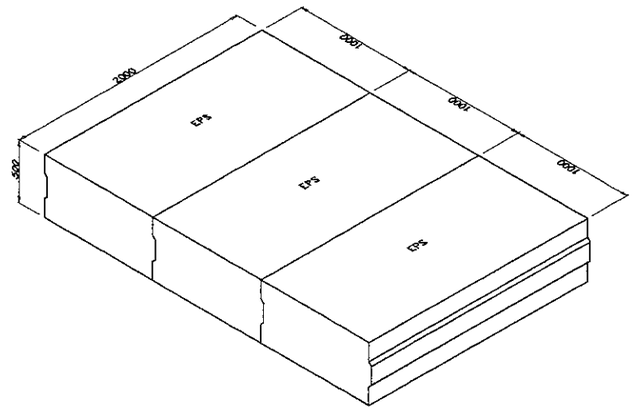


6 - ISOMETRIC
SCALE 1:40

| JAPAN INTERNATIONAL COOPERATION AGENCY<br>KATAHIRA & ENGINEERS INTERNATIONAL | DESIGNED BY | CHECKED BY | SUBMITTED BY | REPUBLIC OF INDONESIA<br>MINISTRY OF PUBLIC WORKS<br>DIRECTORATE GENERAL OF HIGHWAYS | PROJECT AND LOCATION : | SCALE : | DRAWING TITLE : | DRAWING NO : |
|---|---|---|---|---|---|---|---|---|
| | Name: T. OKUMURA | Name: T. OKUMURA | Name: M. KIUCHI | | DETAILED DESIGN STUDY OF<br>NORTH JAVA CORRIDOR FLYOVER PROJECT<br>TANGGULANGIN FLYOVER - CONTRACT PACKAGE 3<br>( PETERONGAN -TANGGULANGIN )<br>EAST JAVA PROVINCE | AS SHOWN | STUBWALL LAYOUT<br>& REINFORCEMENT DETAILS<br>(ABUT. A1 SIDE) | TEP-010 |
| | Sign | Sign | Sign | APPROVED BY: Ir. HERRY VAZA M,Eng.Sc<br>NIP. : 110038400 | | | | SHEET NO : |
| | Date | Date | Date | Sign / Date | | FULL SIZE A3 | | 10 / 11 |

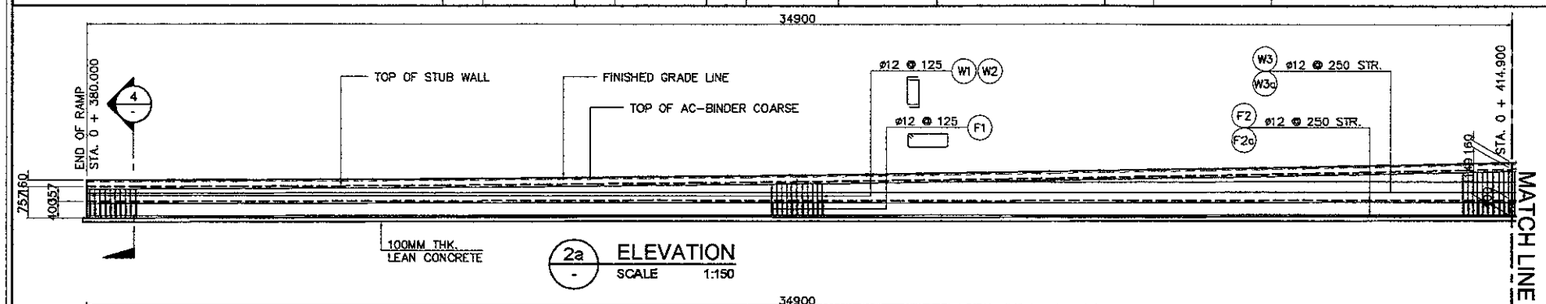


2a ELEVATION
SCALE 1:150

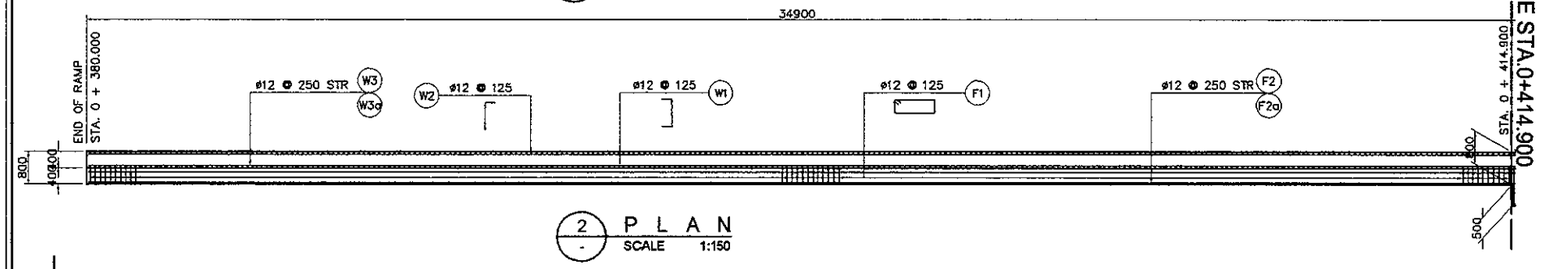


2 PLAN
SCALE 1:150

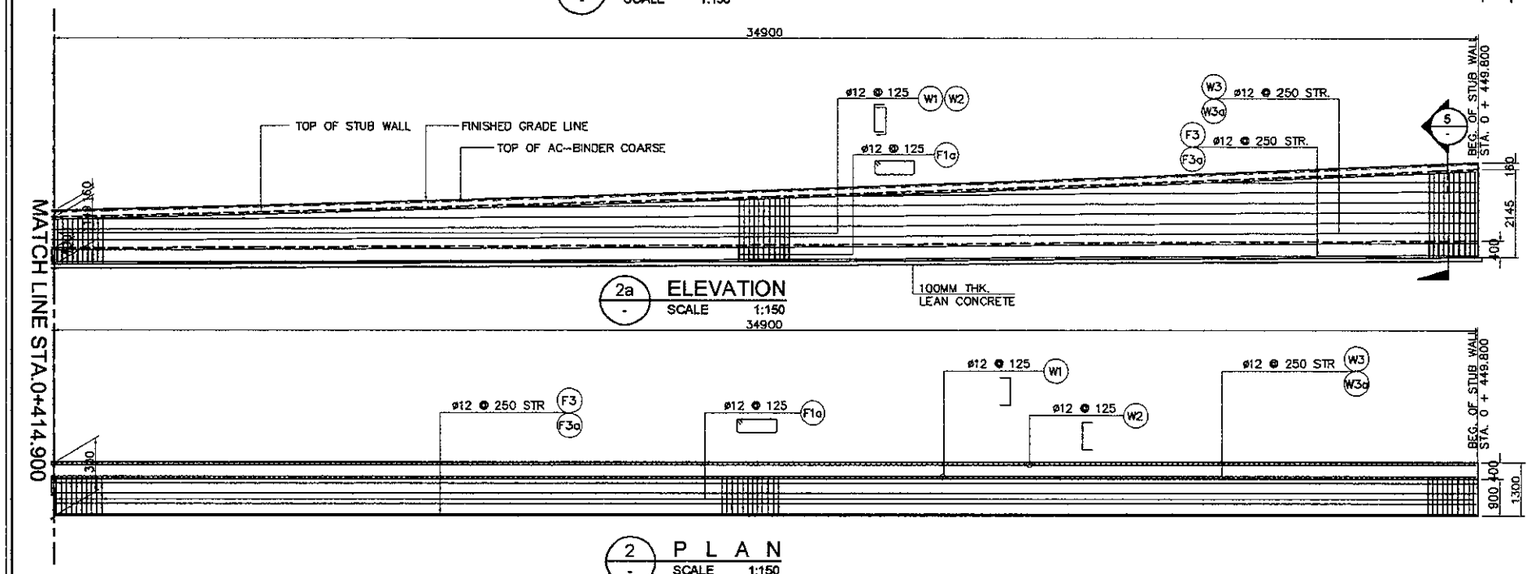


2a ELEVATION
SCALE 1:150

2 PLAN
SCALE 1:150

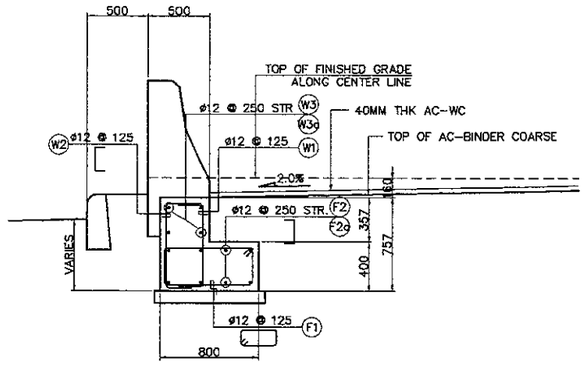


4 SECTION
SCALE 1:50

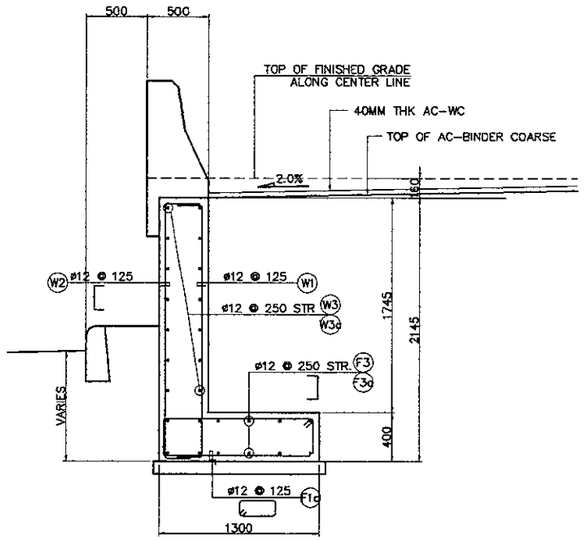


5 SECTION
SCALE 1:50

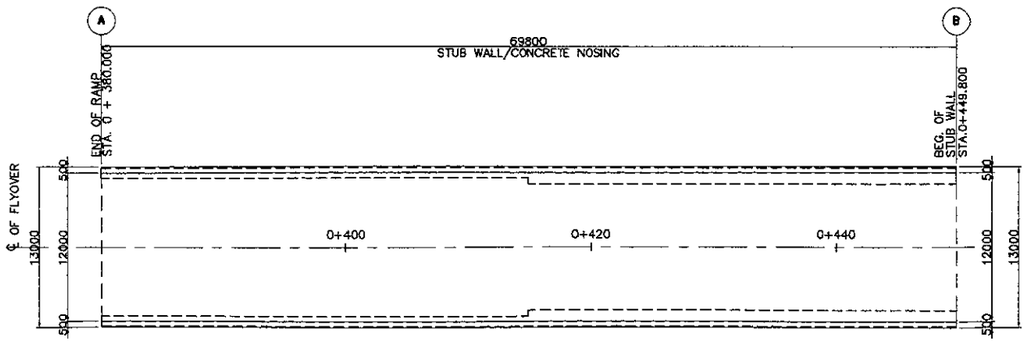


1 PLAN
SCALE 1:500

## BAR BENDING DIAGRAM

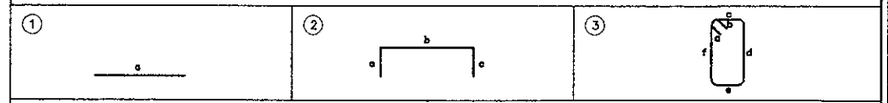


## SCHEDULE OF REINFORCEMENT

| LOCATION | BAR MARK | SIZE (mm) | BEND TYPE | DIMENSION (mm) OUT TO OUT a | b | c | d | e | f | LENGTH (mm) | NO. REQ'D. | UNIT WT. (kg/m) | WEIGHT (kg) | REMARKS |
|---|---|---|---|---|---|---|---|---|---|---|---|---|---|---|
| (W1-W2) LEFT & RIGHT | W1 | 12 | 2 | 300 | 1270 | 300 | | | | 1870 | 1118 | 0.888 | 1857.00 | b is ave. |
| | W2 | 12 | 2 | 300 | 1270 | 300 | | | | 1870 | 1118 | 0.888 | 1857.00 | b is ave. |
| | W3 | 12 | 1 | 12000 | | | | | | 12000 | 96 | 0.888 | 1023.00 | b is ave. |
| | W3a | 12 | 1 | 11220 | | | | | | 11220 | 16 | 0.888 | 159.00 | |
| | | | | | | | | | | | | | | |
| | F1 | 12 | 3 | 150 | 150 | 720 | 320 | 720 | 320 | 2380 | 280 | 0.888 | 592.00 | |
| | F1a | 12 | 3 | 150 | 150 | 1220 | 320 | 1220 | 320 | 3380 | 280 | 0.888 | 840.00 | |
| | | | | | | | | | | | | | | |
| | F2 | 12 | 1 | 12000 | | | | | | 12000 | 32 | 0.888 | 341.00 | |
| | F2a | 12 | 1 | 10950 | | | | | | 10950 | 16 | 0.888 | 156.00 | |
| | F3 | 12 | 1 | 12000 | | | | | | 12000 | 48 | 0.888 | 511.00 | |
| | F3 | 12 | 1 | 10950 | | | | | | 10950 | 24 | 0.888 | 233.00 | |
| | | | | | | | | | TOTAL WEIGHT = | | | | 7,569.00 | |

THE REINFORCEMENT SHOWN ON THIS TABLE IS FOR REFERENCE ONLY, THE CONTRACTOR SHOULD CHECKED AND VERIFY ALL DIMENSIONS, SIZES AND QUANTITIES OF REINFORCEMENT.

| JAPAN INTERNATIONAL COOPERATION AGENCY<br>KATAHIRA & ENGINEERS INTERNATIONAL | DESIGNED BY | CHECKED BY | SUBMITTED BY | REPUBLIC OF INDONESIA<br>MINISTRY OF PUBLIC WORKS<br>DIRECTORATE GENERAL OF HIGHWAYS | PROJECT AND LOCATION : | SCALE : | DRAWING TITLE : | DRAWING NO : |
|---|---|---|---|---|---|---|---|---|
| | Name R. UENO | Name T. OKUMURA | Name M. KIUCHI | | DETAILED DESIGN STUDY OF<br>NORTH JAVA CORRIDOR FLYOVER PROJECT<br>TANGGULANGIN FLYOVER - CONTRACT PACKAGE 3<br>( PETERONGAN -TANGGULANGIN )<br>EAST JAVA PROVINCE | 1 : 200 | STUBWALL LAYOUT<br>& REINFORCEMENT DETAILS<br>(ABUT. A2 SIDE) | TEP-011 |
| | Sign | Sign | Sign | APPROVED BY Ir. HERRY VAZA M,Eng.Sc<br>NIP. : 110038400 | | | | SHEET NO : |
| | Date | Date | Date | Sign / Date | | FULL SIZE A3 | | 11 / 11 |

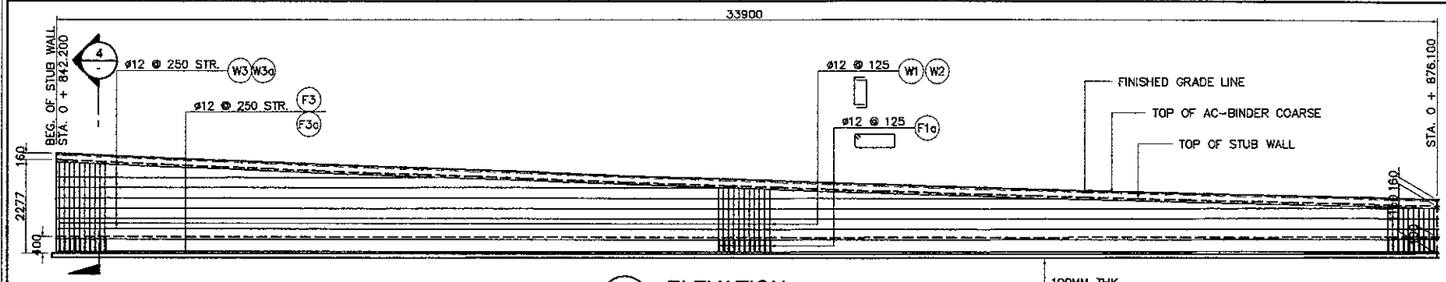


2a ELEVATION
SCALE 1:150

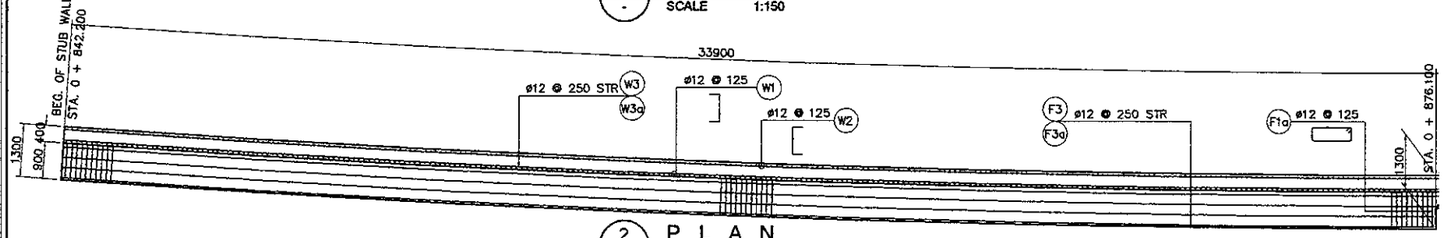


2 PLAN
SCALE 1:150

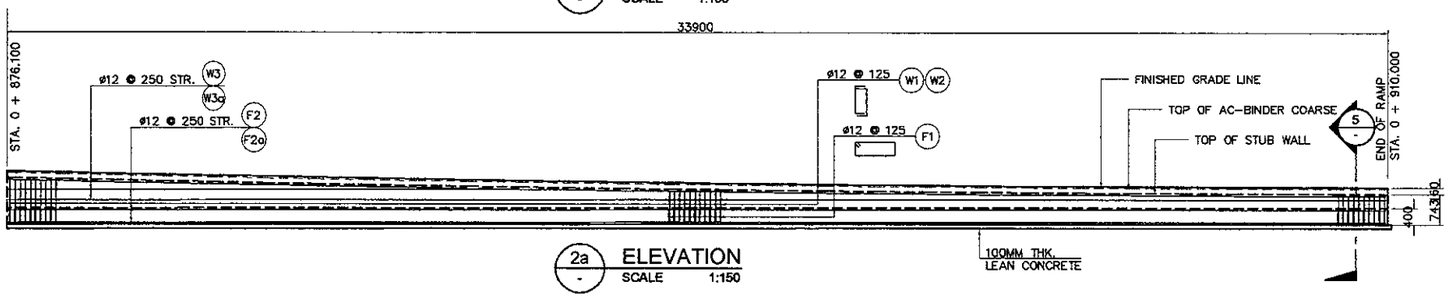


2a ELEVATION
SCALE 1:150

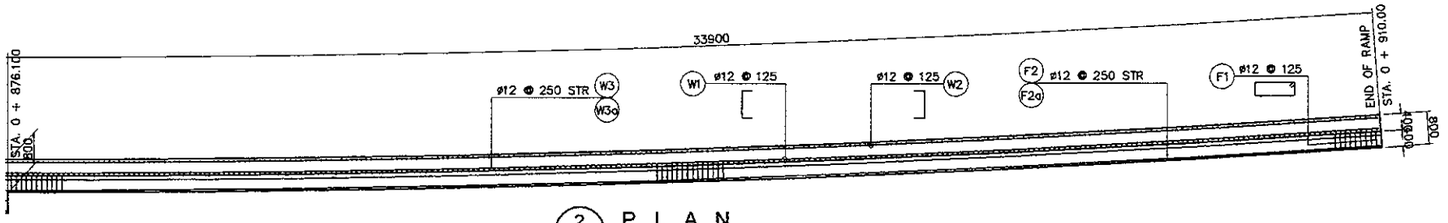


2 PLAN
SCALE 1:150

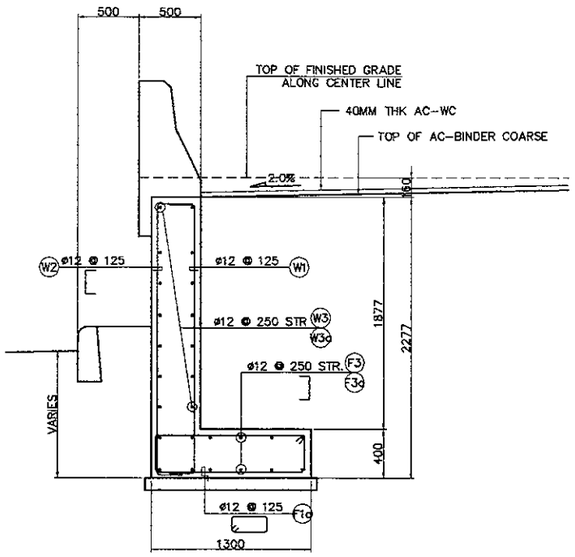


4 SECTION
SCALE 1:50

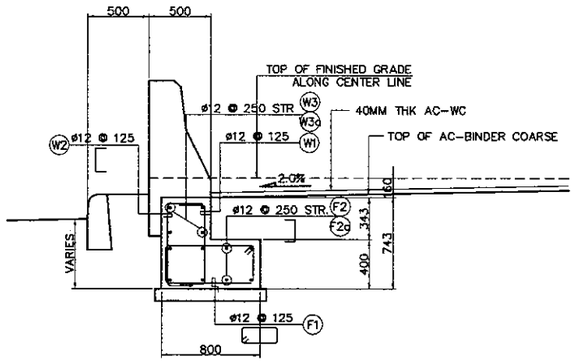


5 SECTION
SCALE 1:50

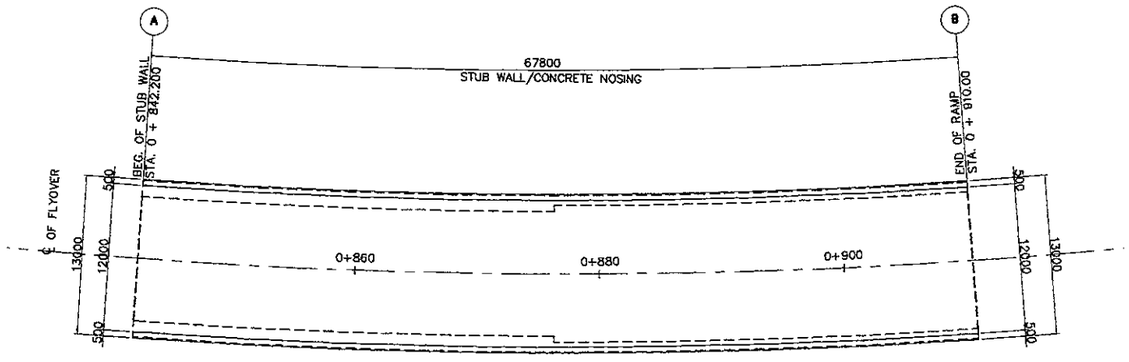


1 PLAN
SCALE 1:500

## BAR BENDING DIAGRAM

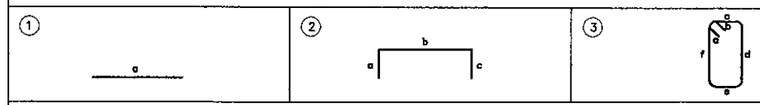


## SCHEDULE OF REINFORCEMENT

| LOCATION | BAR MARK | SIZE (mm) | BEND TYPE | DIMENSION (mm) OUT TO OUT a | b | c | d | e | f | LENGTH (mm) | NO. REQ'D. | UNIT WT (kg/m) | WEIGHT (kg) | REMARKS |
|---|---|---|---|---|---|---|---|---|---|---|---|---|---|---|
| (W1-W2) LEFT & RIGHT | W1 | 12 | 2 | 300 | 1310 | 300 | | | | 1910 | 1086 | 0.888 | 1842.00 | b is ave. |
| | W2 | 12 | 2 | 300 | 1310 | 300 | | | | 1910 | 1086 | 0.888 | 1842.00 | b is ave. |
| | W3 | 12 | 1 | 12000 | | | | | | 12000 | 80 | 0.888 | 852.00 | b is ave. |
| | W3a | 12 | 1 | 9230 | | | | | | 9230 | 16 | 0.888 | 131.00 | |
| | | | | | | | | | | | | | | |
| | F1 | 12 | 3 | 150 | 150 | 720 | 320 | 720 | 320 | 2380 | 544 | 0.888 | 1150.00 | |
| | F1a | 12 | 3 | 150 | 150 | 1220 | 320 | 1220 | 320 | 3380 | 544 | 0.888 | 1633.00 | |
| | | | | | | | | | | | | | | |
| | F2 | 12 | 1 | 12000 | | | | | | 12000 | 32 | 0.888 | 341.00 | |
| | F2a | 12 | 1 | 10760 | | | | | | 10760 | 16 | 0.888 | 153.00 | |
| | F3 | 12 | 1 | 12000 | | | | | | 12000 | 48 | 0.888 | 511.00 | |
| | F3a | 12 | 1 | 10760 | | | | | | 10760 | 24 | 0.888 | 229.00 | |
| | | | | | | | | | TOTAL WEIGHT = | | | | 8,684.00 | |

THE REINFORCEMENT SHOWN ON THIS TABLE IS FOR REFERENCE ONLY, THE CONTRACTOR SHOULD CHECKED AND VERIFY ALL DIMENSIONS, SIZES AND QUANTITIES OF REINFORCEMENT.

JAPAN INTERNATIONAL
COOPERATION AGENCY

DIRECTORATE GENERAL OF HIGHWAY
MINISTRY OF PUBLIC WORKS
REPUBLIC OF INDONESIA

# TRAFFIC CONTROL

KATAHIRA & ENGINEERS INTERNATIONAL

| JAPAN INTERNATIONAL COOPERATION AGENCY<br>KATAHIRA & ENGINEERS INTERNATIONAL | DESIGNED BY | CHECKED BY | SUBMITTED BY | REPUBLIC OF INDONESIA<br>MINISTRY OF PUBLIC WORKS<br>DIRECTORATE GENERAL OF HIGHWAYS | PROJECT AND LOCATION : | SCALE : | DRAWING TITLE : | DRAWING NO : |
|---|---|---|---|---|---|---|---|---|
| | Name: R. UENO | Name: T. OKUMURA | Name: M. KIUCHI | | DETAILED DESIGN STUDY OF<br>NORTH JAVA CORRIDOR FLYOVER PROJECT<br>TANGGULANGIN FLYOVER - CONTRACT PACKAGE 3<br>( PETERONGAN -TANGGULANGIN )<br>EAST JAVA PROVINCE | 1 : 1000 | TRAFFIC SIGNS AND ROAD MARKINGS LAYOUT (FLYOVER)<br>1 OF 2 | TTR-001 |
| | Sign | Sign | Sign | APPROVED BY: Ir. HERRY VAZA M,Eng.Sc<br>NIP. : 110038400 | | FULL SIZE A3 | | SHEET NO : 01 / 24 |
| | Date | Date | Date | Sign / Date | | | | |

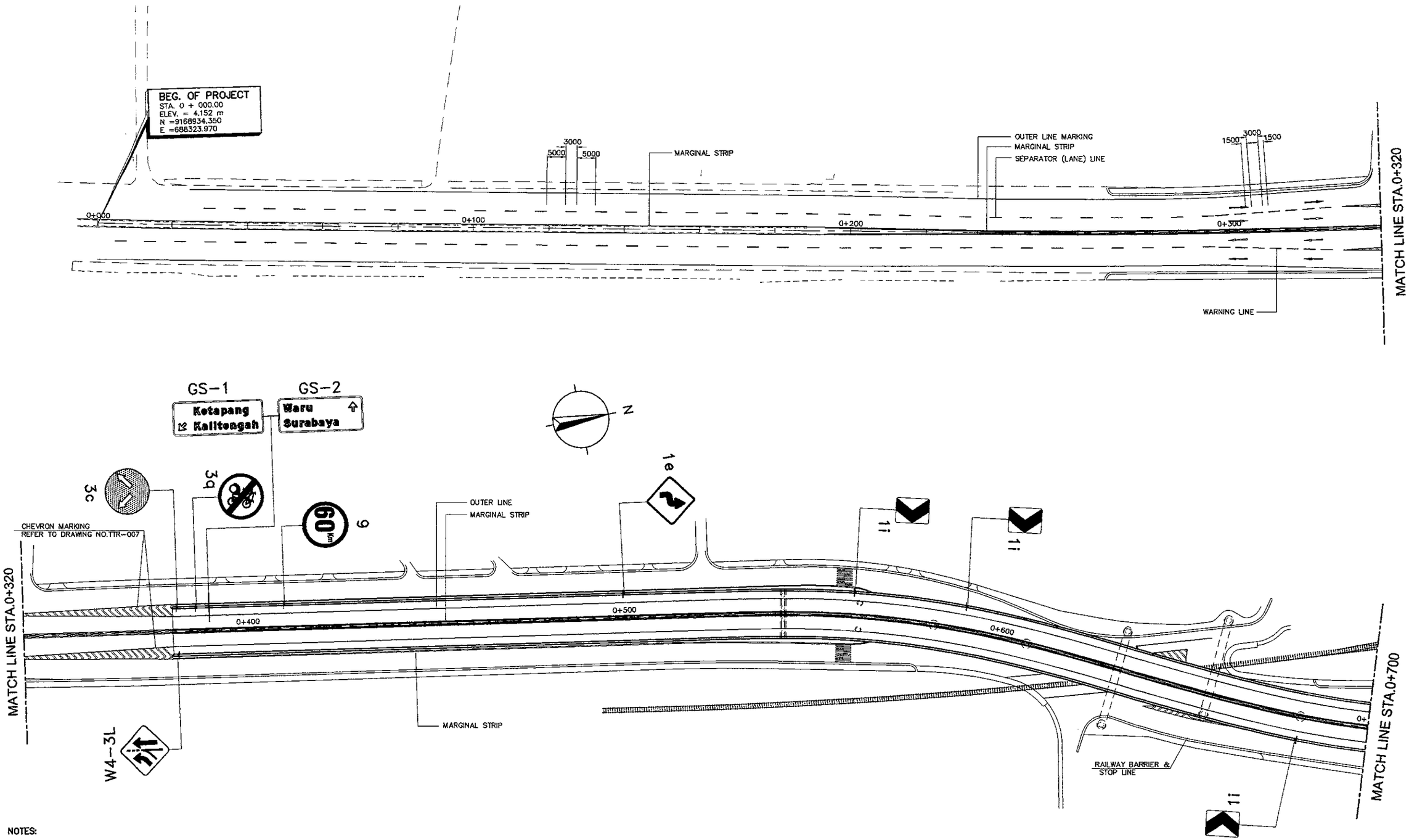


**NOTES:**

1. ALL DIMENSIONS ARE IN MILLIMETERS.
2. FOR PAVEMENT MARKING DETAILS REFER TO DWGS.NOS TTR-005 AND TTR-006.
3. FOR STANDARD TRAFFIC SIGNS DETAILS, REFER TO DWGS.NOS TTR-008 AND TTR-011.
4. LOCATION OF SIGNS SHALL BE VERIFED DURING CONSTRUCTION.
6. OVERHEAD GUIDE SIGNS SHALL BE ATTACHED TO A CANTILEVER TYPE SIGNS SUPPORT, REFER TO DWG.NOS TTR-014 AND TTR-015.
7. DELINEATORS SHALL BE INSTALLED AT FACE OF NEW JERSEY BARRIER.

1 / - TRAFFIC SIGNS AND ROAD MARKINGS LAYOUT (FLYOVER) 1 OF 2
SCALE 1:1000

| JICA JAPAN INTERNATIONAL COOPERATION AGENCY / KEI KATAHIRA & ENGINEERS INTERNATIONAL | DESIGNED BY | CHECKED BY | SUBMITTED BY | REPUBLIC OF INDONESIA MINISTRY OF PUBLIC WORKS DIRECTORATE GENERAL OF HIGHWAYS | PROJECT AND LOCATION : | SCALE : | DRAWING TITLE : | DRAWING NO : |
|---|---|---|---|---|---|---|---|---|
| | Name R. UENO | Name T. OKUMURA | Name M. KIUCHI | | DETAILED DESIGN STUDY OF NORTH JAVA CORRIDOR FLYOVER PROJECT TANGGULANGIN FLYOVER - CONTRACT PACKAGE 3 ( PETERONGAN -TANGGULANGIN ) EAST JAVA PROVINCE | 1 : 1000 | TRAFFIC SIGNS AND ROAD MARKINGS LAYOUT (FLYOVER) 2 OF 2 | TTR-002 |
| | Sign | Sign | Sign | APPROVED BY ir. HERRY VAZA M.Eng.Sc NIP. : 110038400 Sign | | | | SHEET NO : |
| | Date | Date | Date | Date | | FULL SIZE A3 | | 02 / 24 |

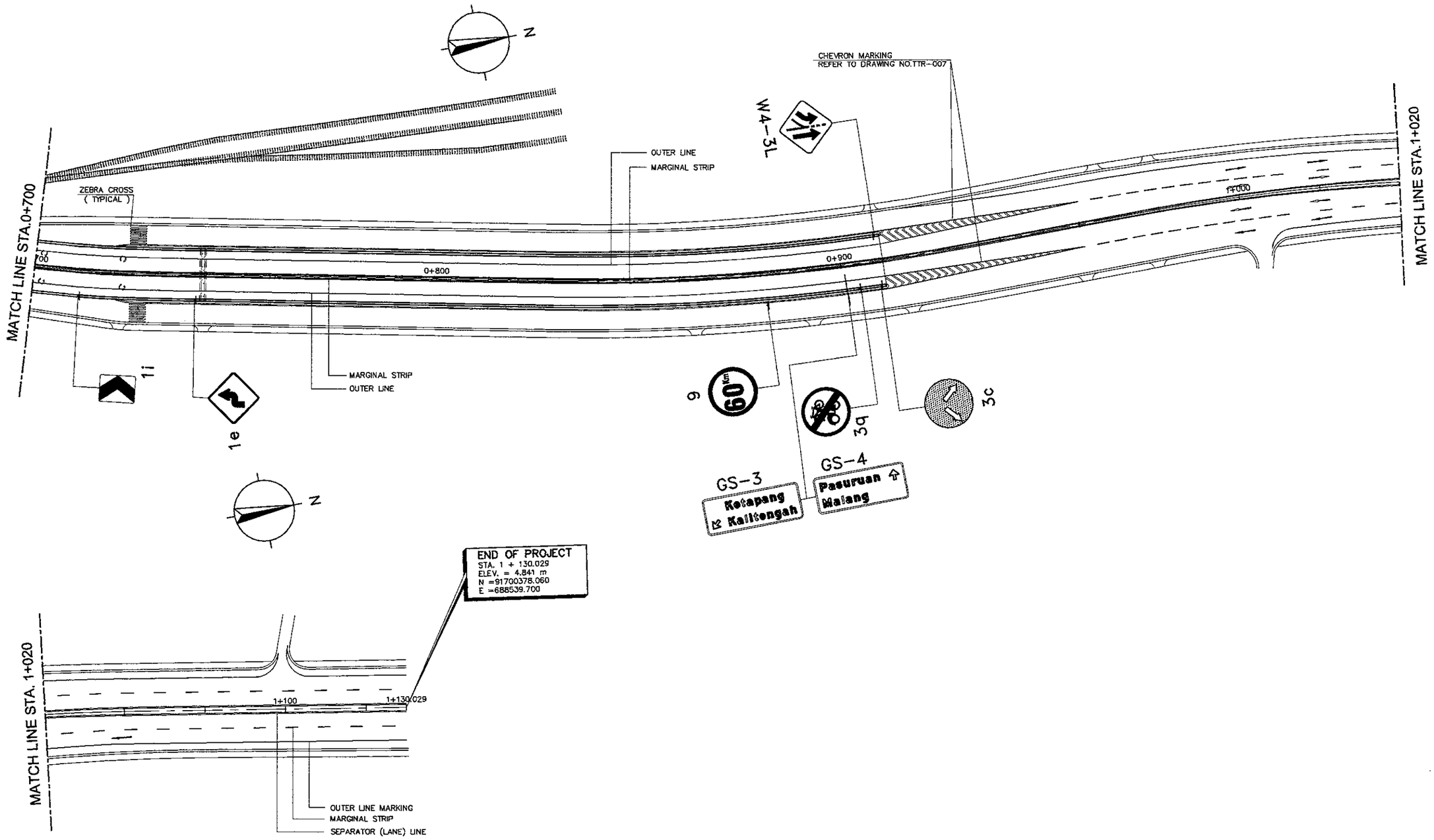


1 / - TRAFFIC SIGNS AND ROAD MARKINGS LAYOUT (FLYOVER) 2 OF 2
SCALE 1:1000

**NOTES:**

1. ALL DIMENSIONS ARE IN MILLIMETERS.
2. FOR PAVEMENT MARKING DETAILS REFER TO DWGS.NOS TTR-005 AND TTR-006.
3. FOR STANDARD TRAFFIC SIGNS DETAILS, REFER TO DWGS.NOS TTR-008 AND TTR-011.
4. LOCATION OF SIGNS SHALL BE VERIFED DURING CONSTRUCTION.
6. OVERHEAD GUIDE SIGNS SHALL BE ATTACHED TO A CANTILEVER TYPE SIGNS SUPPORT, REFER TO DWG.NOS TTR-014 AND TTR-015.
7. DELINEATORS SHALL BE INSTALLED AT FACE OF NEW JERSEY BARRIER.

| JICA JAPAN INTERNATIONAL COOPERATION AGENCY / KEI KATAHIRA & ENGINEERS INTERNATIONAL | DESIGNED BY | CHECKED BY | SUBMITTED BY | REPUBLIC OF INDONESIA MINISTRY OF PUBLIC WORKS DIRECTORATE GENERAL OF HIGHWAYS | PROJECT AND LOCATION : | SCALE : | DRAWING TITLE : | DRAWING NO : |
|---|---|---|---|---|---|---|---|---|
| | Name: R. UENO | Name: T. OKUMURA | Name: M. KIUCHI | | DETAILED DESIGN STUDY OF NORTH JAVA CORRIDOR FLYOVER PROJECT TANGGULANGIN FLYOVER - CONTRACT PACKAGE 3 ( PETERONGAN -TANGGULANGIN ) EAST JAVA PROVINCE | 1 : 1000 | TRAFFIC SIGNS AND ROAD MARKINGS LAYOUT (ATGRADE) 1 OF 2 | TTR-003 |
| | Sign | Sign | Sign | APPROVED BY: Ir. HERRY VAZA M,Eng.Sc NIP. : 110038400 | | FULL SIZE A3 | | SHEET NO : 03 / 24 |
| | Date | Date | Date | Sign / Date | | | | |

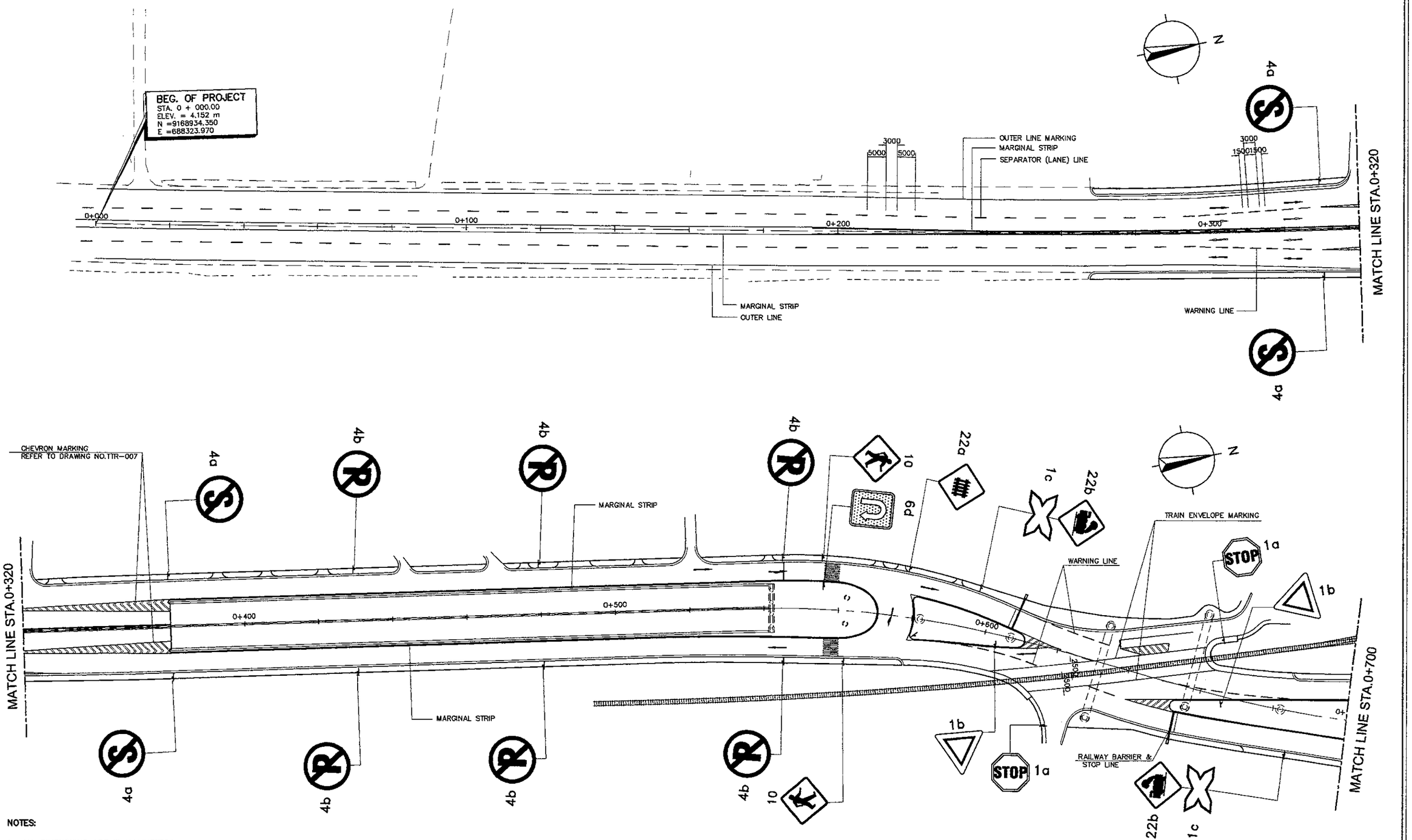


**NOTES:**

1. ALL DIMENSIONS ARE IN MILLIMETERS.
2. FOR PAVEMENT MARKING DETAILS REFER TO DWGS.NOS TTR-005 AND TTR-006.
3. FOR STANDARD TRAFFIC SIGNS DETAILS, REFER TO DWGS.NOS TTR-008 AND TTR-011.
4. LOCATION OF SIGNS SHALL BE VERIFED DURING CONSTRUCTION.
6. OVERHEAD GUIDE SIGNS SHALL BE ATTACHED TO A CANTILEVER TYPE SIGNS SUPPORT, REFER TO DWG.NOS TTR-014 AND TTR-015.
7. DELINEATORS SHALL BE INSTALLED AT FACE OF NEW JERSEY BARRIER.

1 / - TRAFFIC SIGNS AND ROAD MARKINGS LAYOUT (AT GRADE) 1 OF 2

SCALE 1:1000

| JICA JAPAN INTERNATIONAL COOPERATION AGENCY / KEI KATAHIRA & ENGINEERS INTERNATIONAL | DESIGNED BY: Name R. UENO, Sign, Date | CHECKED BY: Name T. OKUMURA, Sign, Date | SUBMITTED BY: Name M. KIUCHI, Sign, Date | REPUBLIC OF INDONESIA MINISTRY OF PUBLIC WORKS DIRECTORATE GENERAL OF HIGHWAYS | APPROVED BY: Ir. HERRY VAZA M,Eng.Sc, NIP. : 110038400, Sign, Date | PROJECT AND LOCATION : DETAILED DESIGN STUDY OF NORTH JAVA CORRIDOR FLYOVER PROJECT TANGGULANGIN FLYOVER - CONTRACT PACKAGE 3 ( PETERONGAN -TANGGULANGIN ) EAST JAVA PROVINCE | SCALE : 1 : 1000, FULL SIZE A3 | DRAWING TITLE : TRAFFIC SIGNS AND ROAD MARKINGS LAYOUT (ATGRADE) 2 OF 2 | DRAWING NO : TTR-04 | SHEET NO : 04 / 24 |
|---|---|---|---|---|---|---|---|---|---|

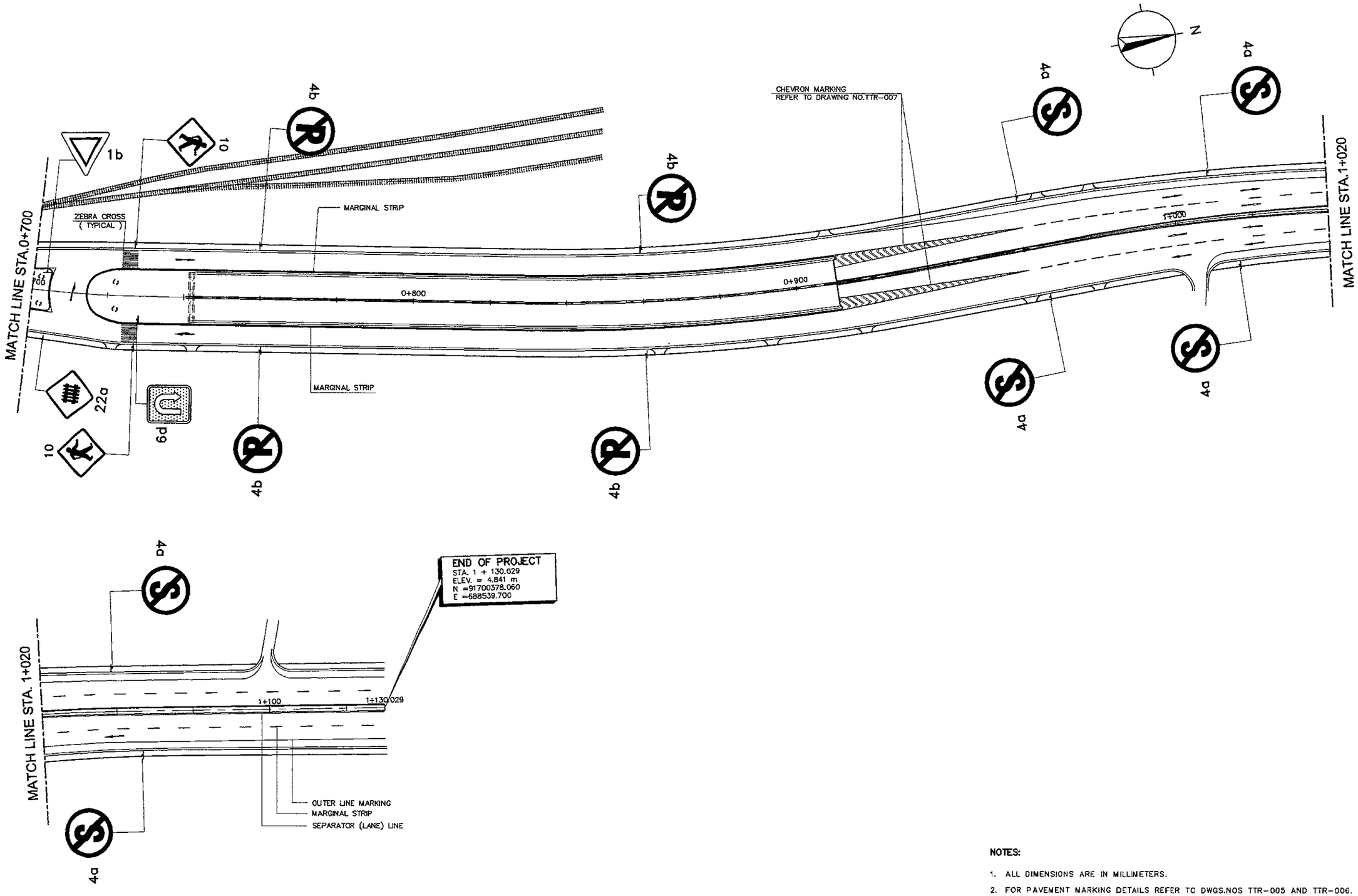


1 - TRAFFIC SIGNS AND ROAD MARKINGS LAYOUT (AT GRADE) 2 OF 2
SCALE 1:1000

**NOTES:**

1. ALL DIMENSIONS ARE IN MILLIMETERS.
2. FOR PAVEMENT MARKING DETAILS REFER TO DWGS.NOS TTR-005 AND TTR-006.
3. FOR STANDARD TRAFFIC SIGNS DETAILS, REFER TO DWGS.NOS TTR-008 AND TTR-011.
4. LOCATION OF SIGNS SHALL BE VERIFED DURING CONSTRUCTION.
6. OVERHEAD GUIDE SIGNS SHALL BE ATTACHED TO A CANTILEVER TYPE SIGNS SUPPORT, REFER TO DWG.NOS TTR-014 AND TTR-015.
7. DELINEATORS SHALL BE INSTALLED AT FACE OF NEW JERSEY BARRIER.

| JICA JAPAN INTERNATIONAL COOPERATION AGENCY / KEI KATAHIRA & ENGINEERS INTERNATIONAL | DESIGNED BY | CHECKED BY | SUBMITTED BY | REPUBLIC OF INDONESIA MINISTRY OF PUBLIC WORKS DIRECTORATE GENERAL OF HIGHWAYS | PROJECT AND LOCATION : | SCALE : | DRAWING TITLE : | DRAWING NO : |
|---|---|---|---|---|---|---|---|---|
| | Name R. UENO | Name T. OKUMURA | Name M. KIUCHI | | DETAILED DESIGN STUDY OF NORTH JAVA CORRIDOR FLYOVER PROJECT TANGGULANGIN FLYOVER - CONTRACT PACKAGE 3 ( PETERONGAN -TANGGULANGIN ) EAST JAVA PROVINCE | AS SHOWN | STANDARD PAVEMENT MARKINGS DETAIL 1 OF 2 | TTR-005 |
| | Sign | Sign | Sign | APPROVED BY Ir. HERRY VAZA M,Eng.Sc NIP. : 110038400 Sign | | | | SHEET NO : |
| | Date | Date | Date | Date | | FULL SIZE A3 | | 05 / 24 |

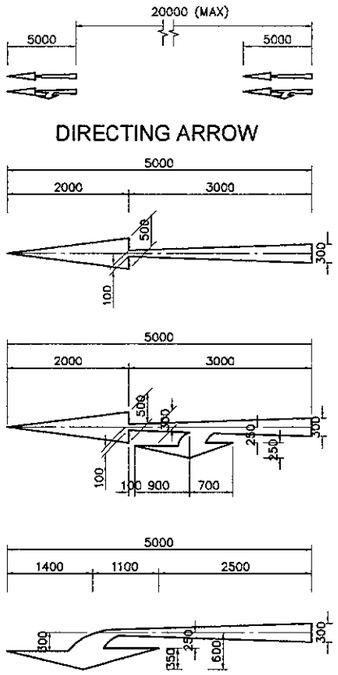


2 - ARROW MARKING DETAIL
SCALE 1 : 10

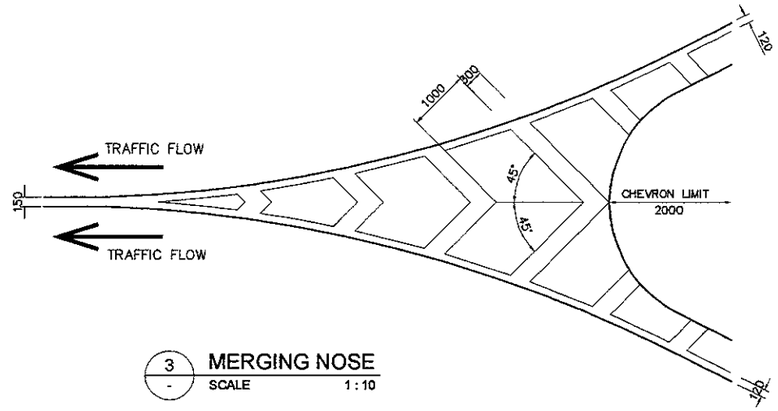


3 - MERGING NOSE
SCALE 1 : 10

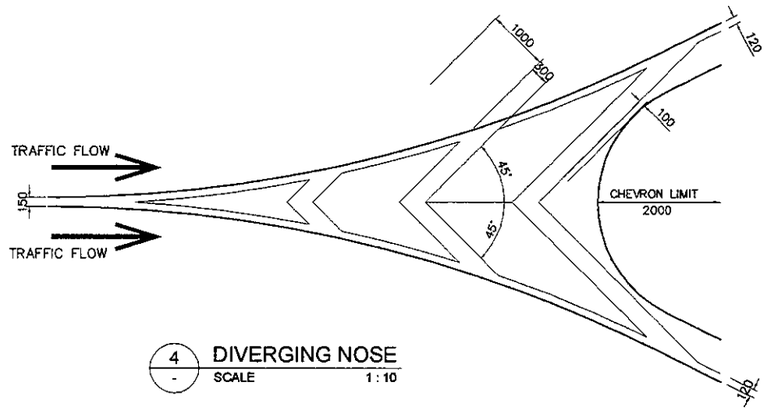


4 - DIVERGING NOSE
SCALE 1 : 10

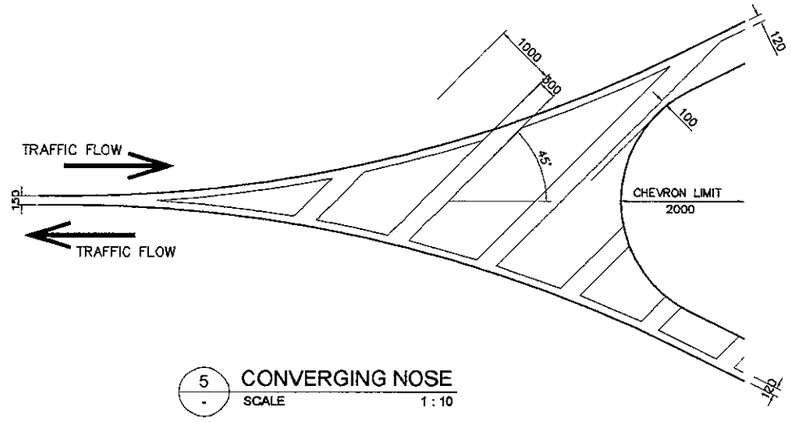


5 - CONVERGING NOSE
SCALE 1 : 10

| TYPE | | LANE MARKINGS |
|---|---|---|
| A | CONTINOUS/SOLID LINE<br>1. MARGINAL STRIP/ DIRECTION LINE<br>2. APPROACH LINE<br>3. STOP LINE | 120<br>120 ±20000<br>300 |
| B | BROKEN GUIDING LINE (SEPARATOR/DIVIDING LINES) (V ≤ 60 KM/H) | 3000 5000 3000 5000 3000 5000 3000 5000 3000 5000 3000 120 |
| C | WARNING LINE (MIN 50M) | 3000 3000 3000 3000 3000 3000 3000 3000 3000 3000 150<br>1500 1500 1500 1500 1500 1500 1500 1500 1500 |

1 - TYPES OF LINE MARKING
SCALE 1 : 400

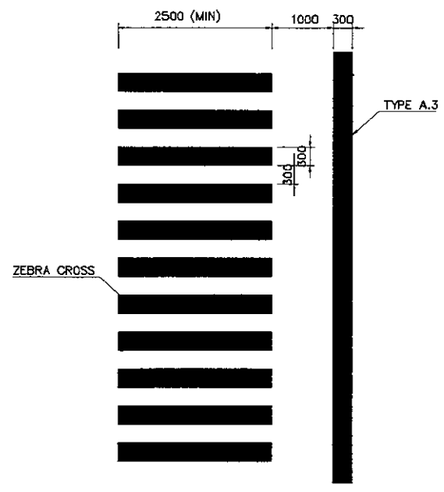


6 - STOP LINE LOCATION AT PEDESTRIAN CROSING
SCALE 1 : 10

NOTES

1. ROAD MARKINGS TO BE WHITE PAINT AND THE MATERIAL SHALL BE APPROVED BY THE ENGINEER
2. ALL DIMENSIONS ARE IN MM UNLESS OTHERWISE SHOWN
3. MARKING AT ALL LOCATIONS OF THE ROAD SHALL BE PROVIDED AS SHOWN IN THE DRAWINGS AND AS INSTRUCTED/ APPROVED BY THE ENGINEER
4. PAVEMENT/ROAD MARKINGS SHOULD CONFORM WITH THE " DINAS PERHUBUNGAN LALU LINTAS DAN ANGKUTAN JALAN SETEPAT "

| JAPAN INTERNATIONAL COOPERATION AGENCY<br>KATAHIRA & ENGINEERS INTERNATIONAL | DESIGNED BY | CHECKED BY | SUBMITTED BY | REPUBLIC OF INDONESIA<br>MINISTRY OF PUBLIC WORKS<br>DIRECTORATE GENERAL OF HIGHWAYS | PROJECT AND LOCATION : | SCALE : | DRAWING TITLE : | DRAWING NO : |
|---|---|---|---|---|---|---|---|---|
| | Name: R. UENO | Name: T. OKUMURA | Name: M. KIUCHI | | DETAILED DESIGN STUDY OF<br>NORTH JAVA CORRIDOR FLYOVER PROJECT<br>TANGGULANGIN FLYOVER - CONTRACT PACKAGE 3<br>( PETERONGAN -TANGGULANGIN )<br>EAST JAVA PROVINCE | NTS | STANDARD PAVEMENT MARKINGS DETAIL<br>2 OF 2 | TTR-006 |
| | Sign | Sign | Sign | APPROVED BY: Ir. HERRY VAZA M,Eng.Sc<br>NIP. : 110038400 | | | | SHEET NO : |
| | Date | Date | Date | Sign / Date | | FULL SIZE A3 | | 06 / 24 |

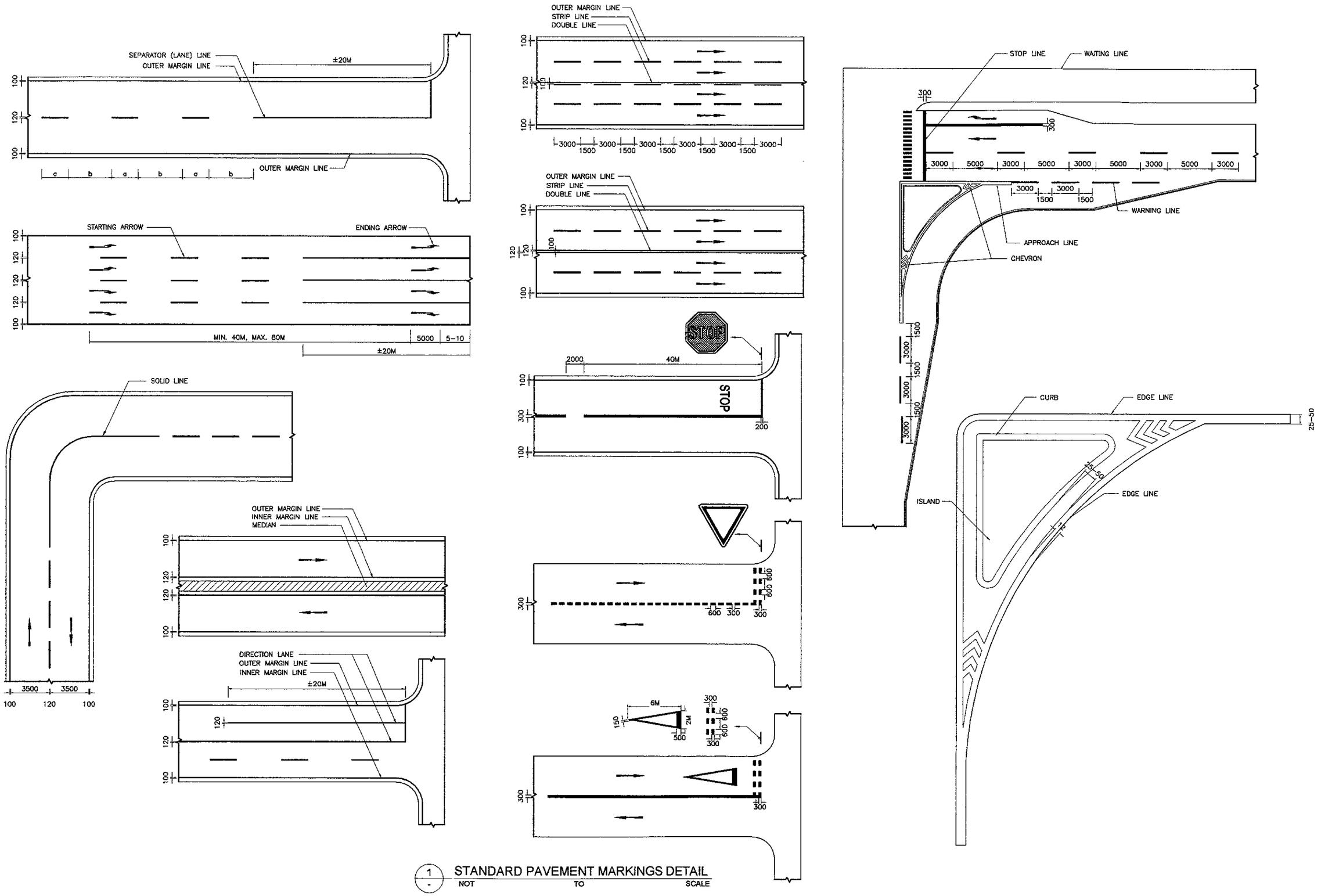


1 / - STANDARD PAVEMENT MARKINGS DETAIL
NOT TO SCALE

| JAPAN INTERNATIONAL COOPERATION AGENCY<br>KATAHIRA & ENGINEERS INTERNATIONAL | DESIGNED BY | CHECKED BY | SUBMITTED BY | REPUBLIC OF INDONESIA<br>MINISTRY OF PUBLIC WORKS<br>DIRECTORATE GENERAL OF HIGHWAYS | PROJECT AND LOCATION : | SCALE : | DRAWING TITLE : | DRAWING NO : |
|---|---|---|---|---|---|---|---|---|
| | Name: R. UENO | Name: T. OKUMURA | Name: M. KIUCHI | | DETAILED DESIGN STUDY OF<br>NORTH JAVA CORRIDOR FLYOVER PROJECT<br>TANGGULANGIN FLYOVER - CONTRACT PACKAGE 3<br>( PETERONGAN -TANGGULANGIN )<br>EAST JAVA PROVINCE | NTS | STANDARD PAVEMENT MARKING AT RAILROAD CROSSING | TTR-007 |
| | Sign | Sign | Sign | APPROVED BY: Ir. HERRY VAZA M,Eng.Sc<br>NIP. : 110038400 | | | | SHEET NO : |
| | Date | Date | Date | Sign / Date | | FULL SIZE A3 | | 07 / 24 |

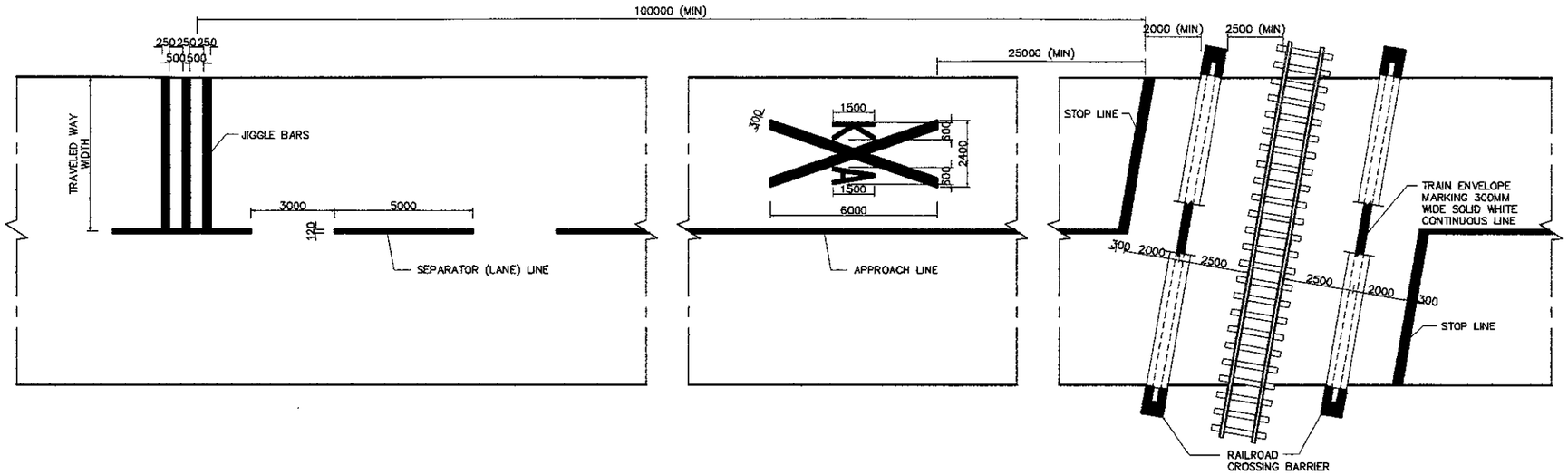


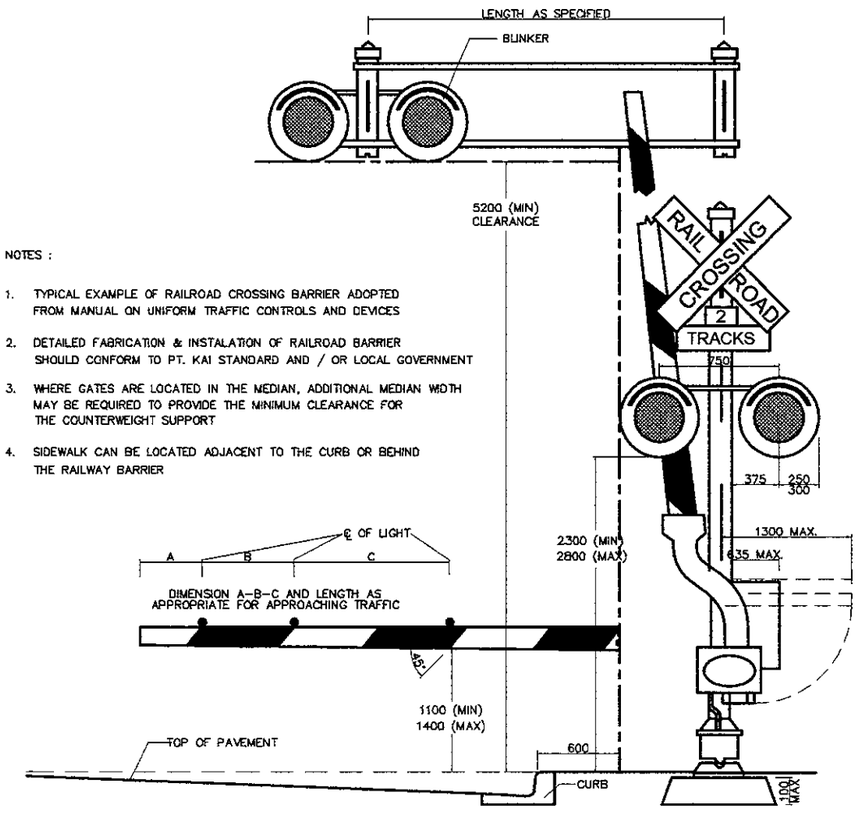


NOTES :

1. TYPICAL EXAMPLE OF RAILROAD CROSSING BARRIER ADOPTED FROM MANUAL ON UNIFORM TRAFFIC CONTROLS AND DEVICES
2. DETAILED FABRICATION & INSTALATION OF RAILROAD BARRIER SHOULD CONFORM TO PT. KAI STANDARD AND / OR LOCAL GOVERNMENT
3. WHERE GATES ARE LOCATED IN THE MEDIAN, ADDITIONAL MEDIAN WIDTH MAY BE REQUIRED TO PROVIDE THE MINIMUM CLEARANCE FOR THE COUNTERWEIGHT SUPPORT
4. SIDEWALK CAN BE LOCATED ADJACENT TO THE CURB OR BEHIND THE RAILWAY BARRIER

TYPICAL RAILROAD CROSSING GATE

SCALE

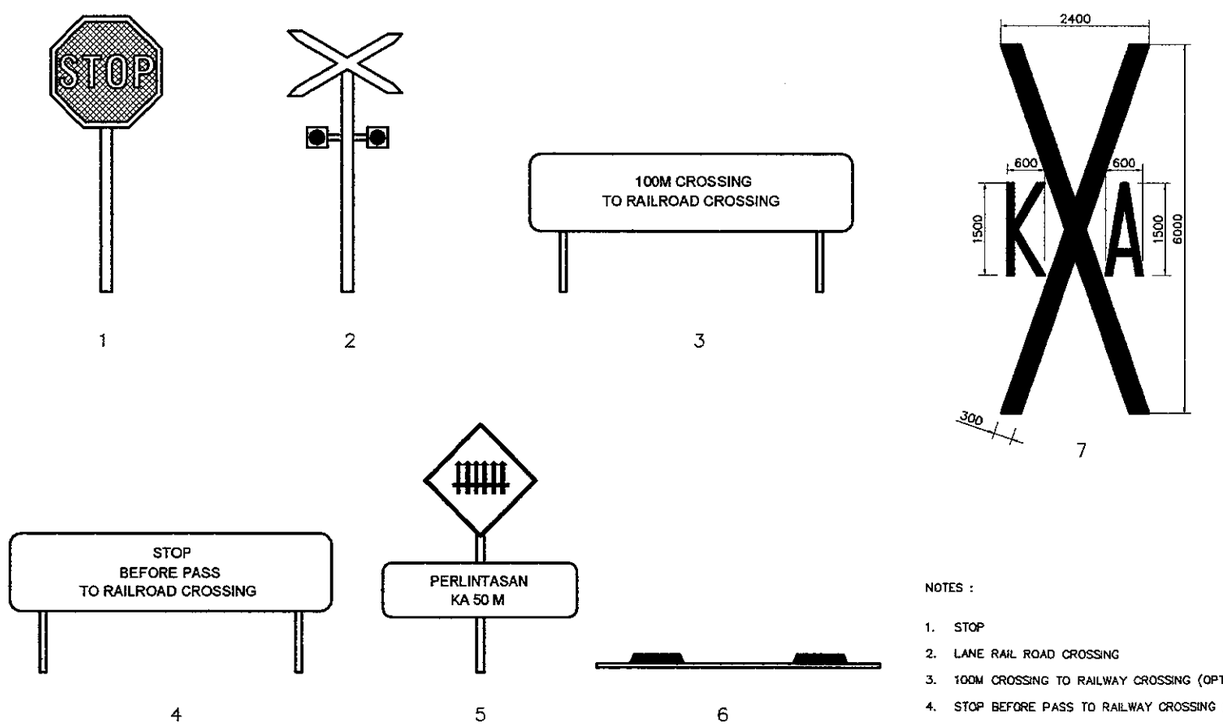


NOTES :

1. STOP
2. LANE RAIL ROAD CROSSING
3. 100M CROSSING TO RAILWAY CROSSING (OPTIONAL)
4. STOP BEFORE PASS TO RAILWAY CROSSING (OPTIONAL)
5. RAILWAY CROSSING WITH GATES
6. JIGGLE BARS
7. RAILROAD CROSSING

1 - STANDARD SIGNS AND PAVEMENT MARKINGS AT RAILROAD CROSSING

NOT TO SCALE

| JICA JAPAN INTERNATIONAL COOPERATION AGENCY / KEI KATAHIRA & ENGINEERS INTERNATIONAL | DESIGNED BY | CHECKED BY | SUBMITTED BY | REPUBLIC OF INDONESIA MINISTRY OF PUBLIC WORKS DIRECTORATE GENERAL OF HIGHWAYS | PROJECT AND LOCATION : | SCALE : | DRAWING TITLE : | DRAWING NO : |
|---|---|---|---|---|---|---|---|---|
| | Name: R. UENO | Name: T. OKUMURA | Name: M. KIUCHI | | DETAILED DESIGN STUDY OF NORTH JAVA CORRIDOR FLYOVER PROJECT TANGGULANGIN FLYOVER - CONTRACT PACKAGE 3 ( PETERONGAN -TANGGULANGIN ) EAST JAVA PROVINCE | 1 : 300 | CHEVRON MARKING DETAILS (FLYOVER APPROACHES) | TTR-008 |
| | Sign | Sign | Sign | APPROVED BY: Ir. HERRY VAZA M,Eng.Sc | | | | SHEET NO : |
| | Date | Date | Date | NIP. : 110038400 Sign / Date | | FULL SIZE A3 | | 08 / 24 |

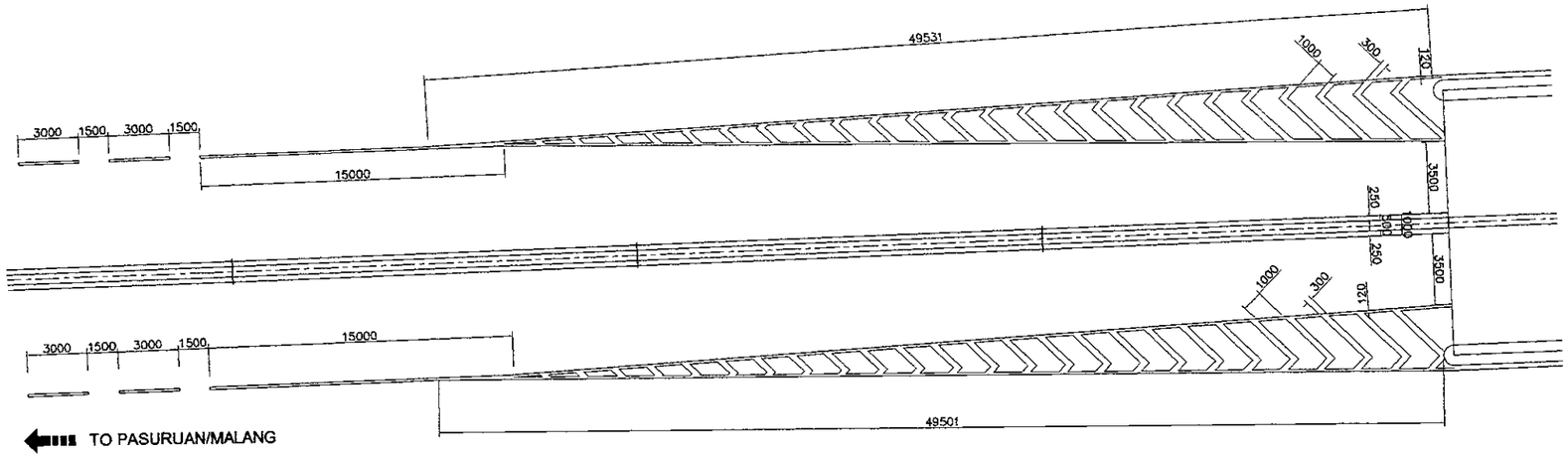


APPROACH 1

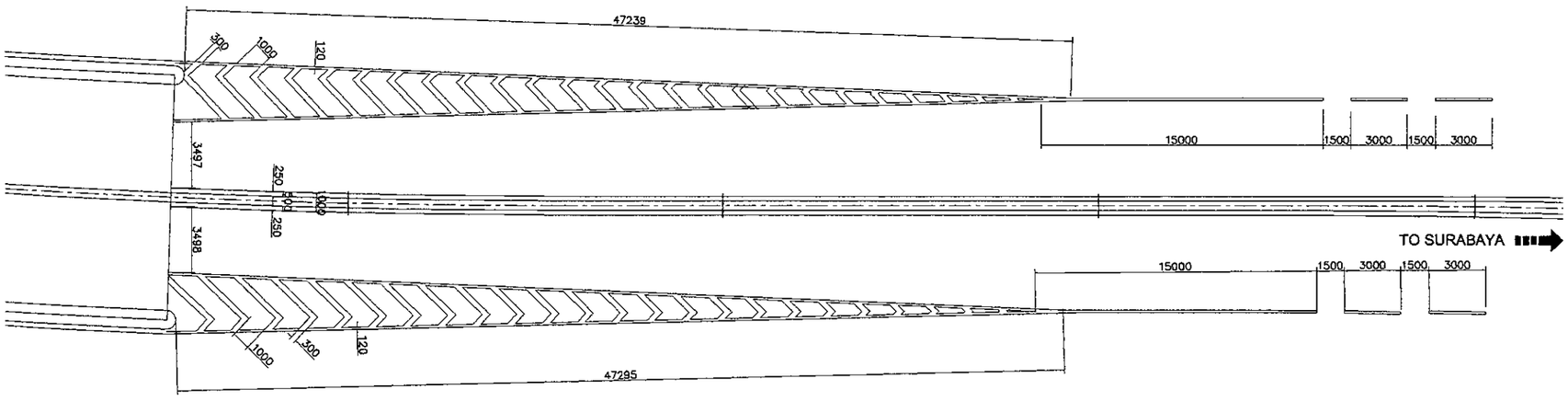


APPROACH 2

1 / - CHEVRON MARKINGS AT FLYOVER APPROACHES

SCALE 1:300

| JICA JAPAN INTERNATIONAL COOPERATION AGENCY / KEI KATAHIRA & ENGINEERS INTERNATIONAL | DESIGNED BY | CHECKED BY | SUBMITTED BY | REPUBLIC OF INDONESIA MINISTRY OF PUBLIC WORKS DIRECTORATE GENERAL OF HIGHWAYS | PROJECT AND LOCATION : | SCALE : | DRAWING TITLE : | DRAWING NO : |
|---|---|---|---|---|---|---|---|---|
| | Name: R. UENO | Name: T. OKUMURA | Name: M. KIUCHI | | DETAILED DESIGN STUDY OF NORTH JAVA CORRIDOR FLYOVER PROJECT TANGGULANGIN FLYOVER - CONTRACT PACKAGE 3 ( PETERONGAN -TANGGULANGIN ) EAST JAVA PROVINCE | NTS | STANDARD TRAFFIC SIGNS 1 OF 4 | TTR-009 |
| | Sign | Sign | Sign | APPROVED BY: Ir. HERRY VAZA M,Eng.Sc NIP. : 110038400 Sign | | | | SHEET NO : 9 / 24 |
| | Date | Date | Date | Date | | FULL SIZE A3 | | |

## TABLE I. WARNING SIGNS

MINISTRY OF COMMUNICATION NO.KM.61 YEAR 1993

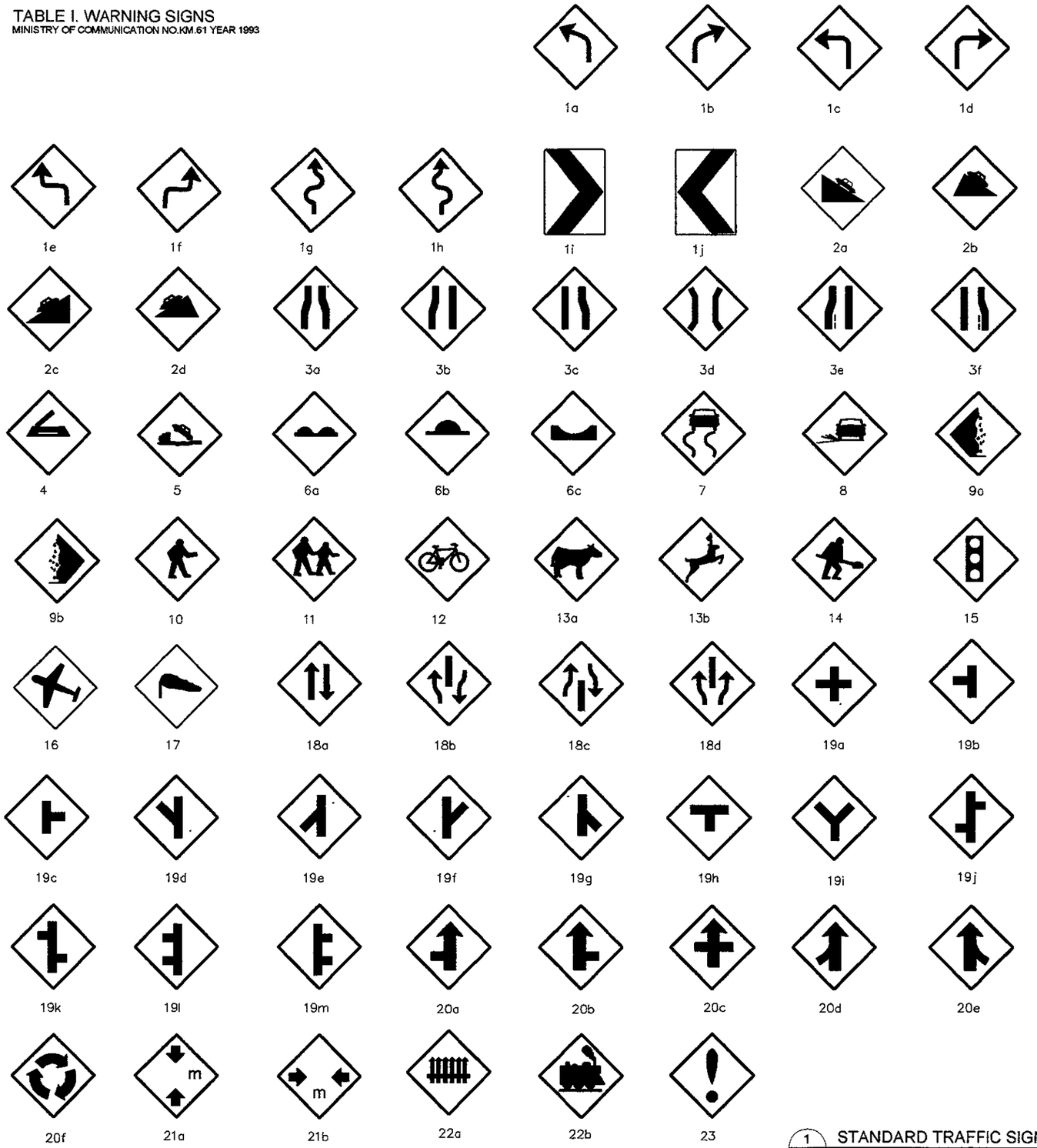


1a. LEFT CURVE
1b. RIGHT CURVE
1c. SHARP LEFT CURVE
1d. SHARP RIGHT CURVE
1e. DOUBLE CURVE, BEGIN WITH LEFT CURVE
1f. DOUBLE CURVE, BEGIN WITH RIGHT CURVE
1g. MANY CURVES, BEGIN WITH LEFT CURVE
1h. MANY CURVES, BEGIN WITH RIGHT CURVE
1i. RIGHT CURVE
1j. LEFT CURVE
2a. DOWN GRADE
2b. DOWN GRADE SHARP
2c. UP GRADE
2d. UP GRADE SHARP
3a. CHANGING OF ROAD WIDTH
3b. CHANGING OF ROAD WIDTH LEFT
3c. CHANGING OF ROAD WIDTH RIGHT
3d. CHANGING OF ROAD WIDTH AT BRIDGE
3e. MERGER OF LEFT LANE TO RIGHT LANE
3f. MERGER OF RIGHT LANE TO LEFT LANE
4. LIFT BRIDGE
5. WHARF
6a. CONDITIONAL OF ROAD PROFILE IS NOT EVEN
6b. CONDITIONAL OF ROAD PROFILE IS CONVEX
6c. CONDITIONAL OF ROAD PROFILE IS CONCAVE
7. SLIPPERY
8. MANY GRAVEL'S
9a. FALLING ROCKS FROM LEFT
9b. FALLING ROCKS FROM RIGHT
10. WATCH FOR PEDESTRIAN
11. WATCH FOR CHILDREN
12. WATCH FOR BICYCLE
13a. WATCH FOR CATTLE
13b. WATCH FOR WILD LIFE
14. ROAD WORK
15. TRAFFIC CONTROL LIGHTS
16. PLANE TRAJECTORY
17. WIND FROM SIDE COURSE
18a. TWO WAY TRAFFIC
18b. BEGINNING OF SEPARATOR ON TWO WAY TRAFFIC
18c. END OF SEPARATOR ON TWO WAY TRAFFIC
18d. BEGINNING OF SEPARATOR ON ONE WAY TRAFFIC

19a. CROSS ROAD
19b. INTERSECTION FROM LEFT DIRECTION TRAFFIC
19c. INTERSECTION FROM RIGHT DIRECTION TRAFFIC
19d. INTERSECTION FROM FRONT LEFT DIRECTION TRAFFIC
19e. INTERSECTION FROM BACK LEFT DIRECTION TRAFFIC
19f. INTERSECTION FROM FRONT RIGHT DIRECTION TRAFFIC
19g. INTERSECTION FROM BACK RIGHT DIRECTION TRAFFIC
19h. T-TYPE INTERSECTION
19i. Y-TYPE INTERSECTION
19j. TWO INTERSECTION, BEGIN FROM LEFT DIRECTION TRAFFIC AND THEN RIGHT DIRECTION TRAFFIC
19k. TWO INTERSECTION, BEGIN FROM RIGHT DIRECTION TRAFFIC AND THEN LEFT DIRECTION TRAFFIC
19l. TWO INTERSECTION, BOTH OF THEM FROM LEFT DIRECTION TRAFFIC
19m. TWO INTERSECTION, BOTH OF THEM FROM RIGHT DIRECTION TRAFFIC
20a. CROSSROAD WITH PRIORITY
20b. INTERSECTION FROM LEFT DIRECTION TRAFFIC WITH PRIORITY
20c. INTERSECTION FROM RIGHT DIRECTION TRAFFIC WITH PRIORITY
20d. INTERSECTION FROM BACK LEFT DIRECTION TRAFFIC WITH PRIORITY
20e. NTERSECTION FROM BACK RIGHT DIRECTION TRAFFIC WITH PRIORITY
21a. HEIGHT OF FREE SPACE
21b. WIDTH OF FREE SPACE
22a. RAIL ROAD CROSSING WITH GATES
22b. RAIL ROAD GROSSING WITHOUT GATES
23. LOOK OUT

COLOR LEGEND :

YELLOW

BLACK

NOTE :

STANDARD TRAFFIC ROAD SIGNS SHOULD CONFORM WITH THE " DINAS PERHUBUNGAN LALU LINTAS DAN ANGKUTAN JALAN SETEMPAT "

1 - STANDARD TRAFFIC SIGNS
NOT TO SCALE

| JAPAN INTERNATIONAL COOPERATION AGENCY<br>KATAHIRA & ENGINEERS INTERNATIONAL | DESIGNED BY | CHECKED BY | SUBMITTED BY | REPUBLIC OF INDONESIA<br>MINISTRY OF PUBLIC WORKS<br>DIRECTORATE GENERAL OF HIGHWAYS | PROJECT AND LOCATION : | SCALE : | DRAWING TITLE : | DRAWING NO : |
|---|---|---|---|---|---|---|---|---|
| | Name R. UENO | Name T. OKUMURA | Name M. KIUCHI | | DETAILED DESIGN STUDY OF<br>NORTH JAVA CORRIDOR FLYOVER PROJECT<br>TANGGULANGIN FLYOVER - CONTRACT PACKAGE 3<br>( PETERONGAN -TANGGULANGIN )<br>EAST JAVA PROVINCE | NTS | STANDARD TRAFFIC SIGNS<br>2 OF 4 | TTR-010 |
| | Sign | Sign | Sign | APPROVED BY Ir. HERRY VAZA M,Eng.Sc Sign | | | | SHEET NO : |
| | Date | Date | Date | NIP. : 110038400 Date | | FULL SIZE A3 | | 10 / 24 |

## TABLE II A. PROHIBITION SIGN

MINISTRY OF COMMUNICATION NO.KM.61 YEAR 1993

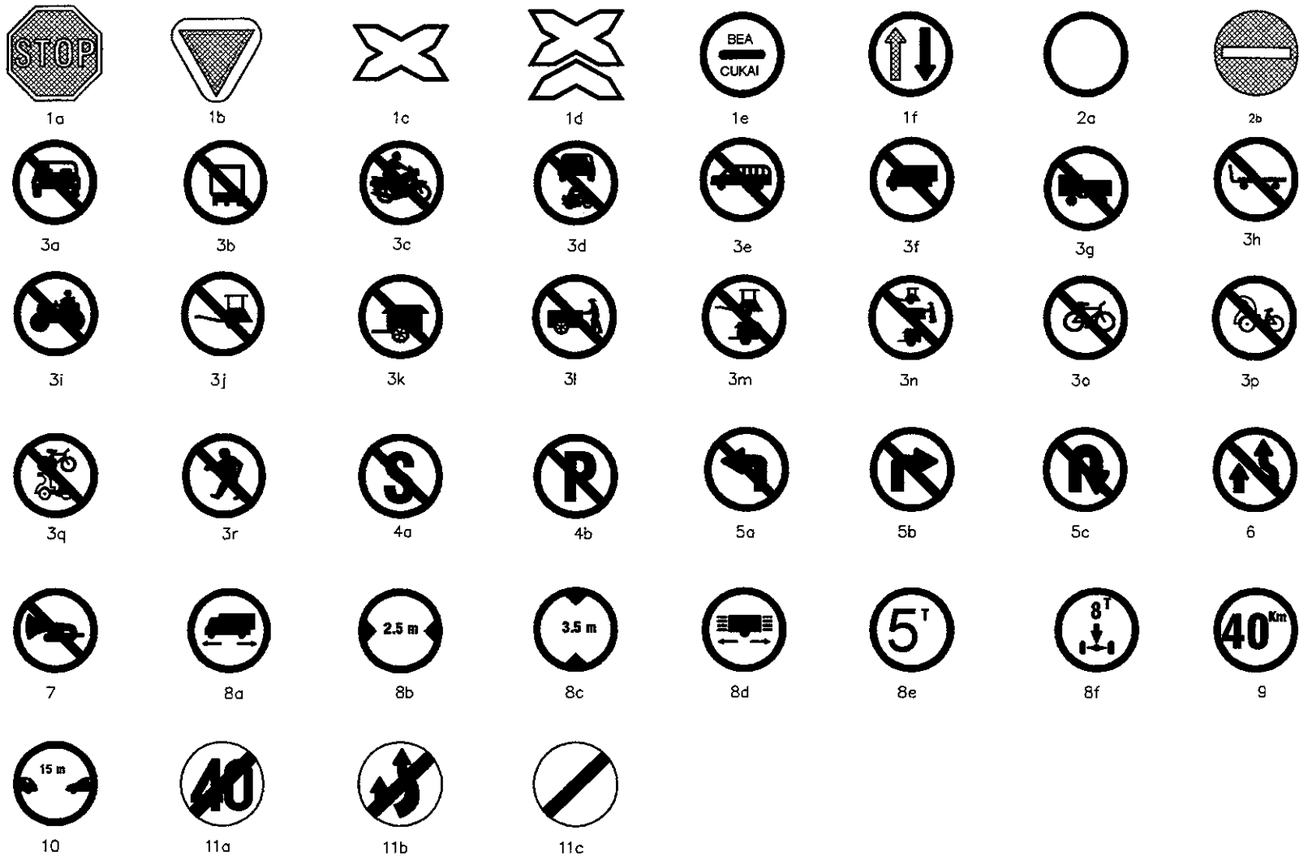


1a 1b 1c 1d 1e 1f 2a 2b

3a 3b 3c 3d 3e 3f 3g 3h

3i 3j 3k 3l 3m 3n 3o 3p

3q 3r 4a 4b 5a 5b 5c 6

7 8a 8b 8c 8d 8e 8f 9

10 11a 11b 11c

1a. STOP

1b. GIVE WAY, YIELD

1c. ONE LANERAIL ROAD CROSSING

1d. TWO LANERAIL ROAD CROSSING

1e. STOP FOR INVESTIGATION CONCERN WITH 'BEA CUKAI'

1f. PRIORITY FOR VEHICLES FROM BOTH DIRECTION

2a. NO ENTRY FOR ALL VEHICLES FROM BOTH DIRECTIONS

2b. NO ENTRY FOR ALL VEHICLES

3a. NO ENTRY FOR FOUR WHEEL MOTORIZED VEHICLES

3b. NO ENTRY FOR THREE WHEEL MOTORIZED VEHICLES

3c. NO ENTRY FOR TWO WHEEL MOTORIZED VEHICLES

3d. NO ENTRY FOR ALL MOTORIZED VEHICLES

3e. NO ENTRY FOR BUS

3f. NO ENTRY FOR TRUCK

3g. NO ENTRY FOR MOTORIZED VEHICLE WITH PULL A CART

3h. NO ENTRY FOR TRAILER

3i. NO ENTRY FOR ROLLER

3j. NO ENTRY FOR CARRIAGE

3k. NO ENTRY FOR OXCART

3l. NO ENTRY FOR PUSHCART

3m. NO ENTRY FOR CARRIAGE AND OXCART

3n. NO ENTRY FOR CARRIAGE, PUSHCART AND OXCART

3o. NO ENTRY FOR BICYCLE

3p. NO ENTRY FOR TRICYCLE

3q. NO ENTRY FOR BICYCLE AND TRICYCLE

3r. NO ENTRY FOR PEDESTRIAN

4a. NO STOPPING

4b. NO PARKING

5a. TURN TO LEFT PROHIBITION ( NO LEFT TURN )

5b. TURN TO RIGHT PROHIBITION ( NO RIGHT TURN )

5c. CHANGE OF COURSE PROHIBITION ( NO U-TURN )

6. NO OVERTAKE

7. NO HORN

8a. LENGTH LIMIT FOR MOTORIZED VEHICLE

8b. WIDTH LIMIT

8c. HEIGHT LIMIT

8d. LENGHT LIMIT FOR CART

8e. WEIGHT LIMIT FOR CART

8f. WEIGHT LIMIT

9. SPEED LIMIT

10. DISTANCE LIMIT

11a. END OF SPEED LIMIT AREA

11b. END OF NO OVERTAKE AREA

11c. END OF PROHIBITION AREA

COLOR LEGEND :

- YELLOW
- RED
- BLACK
- BLUE

NOTE :

STANDARD TRAFFIC ROAD SIGNS SHOULD CONFORM WITH THE " DINAS PERHUBUNGAN LALU LINTAS DAN ANGKUTAN JALAN SETEMPAT "

## TABLE II B. INSTRUCTION SIGN

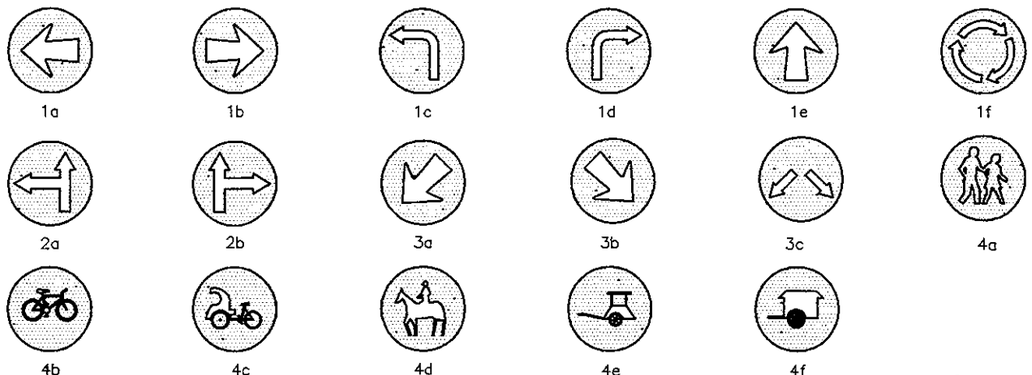

1a 1b 1c 1d 1e 1f

2a 2b 3a 3b 3c 4a

4b 4c 4d 4e 4f

1a. INDICATION OF DIRECTION TO LEFT

1b. INDICATION OF DIRECTION TO RIGHT

1c. TURNING INDICATION TO LEFT

1d. TURNING INDICATION TO RIGHT

1e. MUST BE RUN IN A STRAIGHT LINE

1f. MUST BE FOLLOW THE ARROW POINTS WHILE ON TRAFFIC ROTARY

2a. MUST BE FOLLOW ONE OF THE ARROW POINTS

2b. MUST BE FOLLOW ONE OF THE ARROW POINTS

3a. MUST PASS THIS LANE

3b. MUST PASS THIS LANE

3c. MUST PASS IN ONE OF THESE LANES

4a. FOR PEDESTRIANS

4b. FOR BICYCLES

4c. FOR TRICYCLES

4d. FOR HORSE

4e. FOR CARRIAGE

4f. FOR OXCART

1 - STANDARD TRAFFIC SIGNS
NOT TO SCALE