JICA JAPAN INTERNATIONAL COOPERATION AGENCY	DESIGNED BY	CHECKED BY	SUBMITTED BY	REPUBLIC OF INDONESIA MINISTRY OF PUBLIC WORKS DIRECTORATE GENERAL OF HIGHWAYS	PROJECT AND LOCATION :	SCALE :	DRAWING TITLE :	DRAWING NO :
KATAHIRA & ENGINEERS INTERNATIONAL	Name S. MATSUI	Name T. OKUMURA	Name M. KIUCHI	APPROVED BY Ir. HERRY VAZA M,Eng.Sc NIP. : 110038400	DETAILED DESIGN STUDY OF NORTH JAVA CORRIDOR FLYOVER PROJECT TANGGULANGIN FLYOVER - CONTRACT PACKAGE 3 (PETERONGAN - TANGGULANGIN) EAST JAVA PROVINCE	1 : 10 1 : 20	DETAIL OF STOPPER	TSM-011
	Sign	Sign	Sign	Sign				SHEET NO :
	Date	Date	Date	Date		FULL SIZE A3		11 / 14

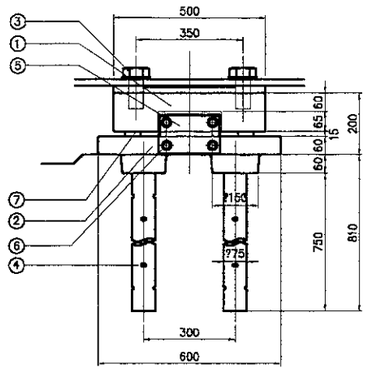

TRANVERSE DIRECTION
SCALE 1 : 20

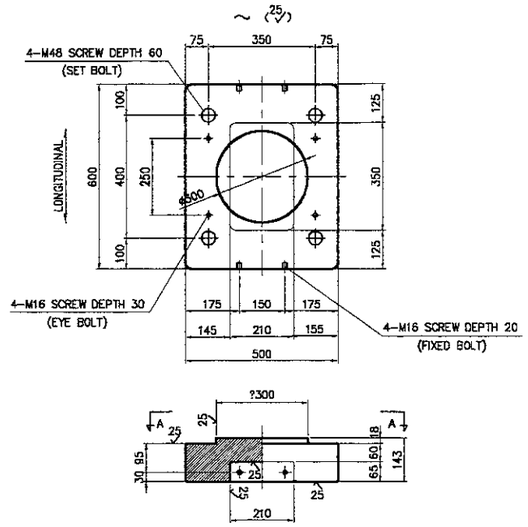

SLIDING PLATE
SCALE 1 : 20

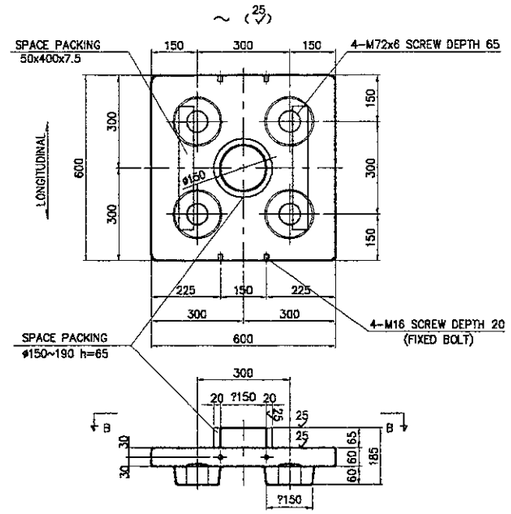

STOPPER PLATE
SCALE 1 : 20

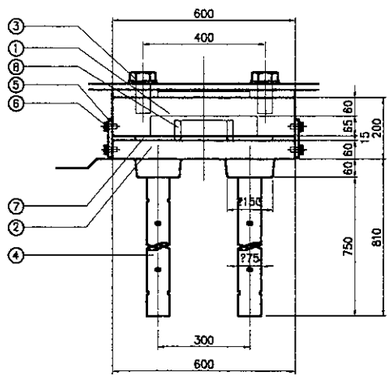

LONGITUDINAL DIRECTION
SCALE 1 : 20

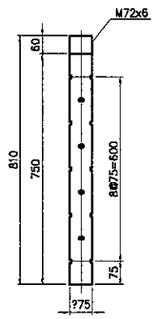

ANCHOR BOLT
SCALE 1 : 10

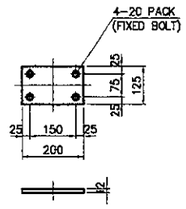

FIXED PLATE
SCALE 1 : 10

DESCRIPTION

NO.	DESCRIPTION	DIMENSI	MATERIAL	QTY	WEIGHT (kg)	REMARKS
①	SLIDING PLATE	600x500x143	SCW480N	1	263.5	
②	STOPPER PART	600x600x185	SCW480N	1	203.6	
③	SET BOLT WHASER	M48x2	STRENGTH 8.8	4	10.7	
4	ANCHOR BOLT	φ75x810	S35CN	4	112.4	M72 SCREW DEPTH 60
5	FIXED PLATE	125x200x12	SS400	2	4.5	
6	FIXED BOLT, WHASER	M16x30	STRENGTH 4.6	8	0.8	
7	SPACE PACKING	50x400x15	NR or CR	2 SET	——	G=8 2
8	CUSHION PACKING	φ150~190 h=65	CR	1 SET	——	Hs = 55' ±5
9	EYE BOLT	M16	SS400	–	——	
					595.5	(kg)

1. BASED ON HIGHWAY BRIDGE BEARING MANUAL
2. MEMBER WITH ○ TO BE MELT ZINC PLATING
   JIS H 8641 HDZ55, HDZ35
3. SPACE PACKING CAN NOT BE OMITTED TO KEEP THE SPACE BETWEEN SUPERSTRUCTURE AND SUBSTRUCTURE
4. WEIGHT OF SET BOLT MUST BE COUNTED FOR Ω=100 AS REFERENCE
5. EYE BOLT CAN BE USE FOR HANGING HOOK
6. NUMBER OF EYE BOLT SHALL BE DECIDED BASED ON THE ERECTION REQUIREMENT

JAPAN INTERNATIONAL COOPERATION AGENCY KATAHIRA & ENGINEERS INTERNATIONAL	DESIGNED BY	CHECKED BY	SUBMITTED BY	REPUBLIC OF INDONESIA MINISTRY OF PUBLIC WORKS DIRECTORATE GENERAL OF HIGHWAYS	PROJECT AND LOCATION :	SCALE :	DRAWING TITLE :	DRAWING NO :
	Name S. MATSUI	Name T. OKUMURA	Name M. KIUCHI		DETAILED DESIGN STUDY OF NORTH JAVA CORRIDOR FLYOVER PROJECT TANGGULANGIN FLYOVER - CONTRACT PACKAGE 3 (PETERONGAN - TANGGULANGIN) EAST JAVA PROVINCE	1 : 20	DETAIL OF RESTRAINER TYPE-3	TSM-012
	Sign	Sign	Sign	APPROVED BY Ir. HERRY VAZA M.Eng.Sc NIP. : 110038400 Sign				SHEET NO :
	Date	Date	Date	Date		FULL SIZE A3		12 / 14

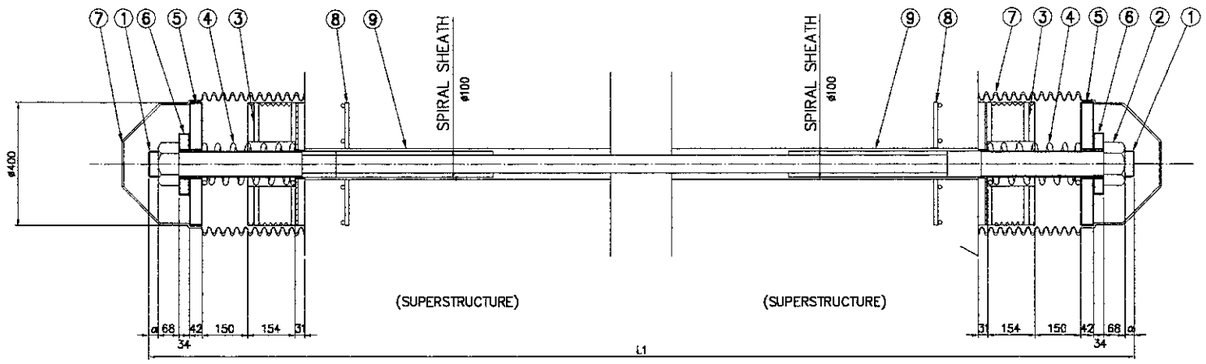

DETAIL OF ATTACHMENT
SCALE 1 : 20

DESIGN CONDITION

DESIGN LOAD	≤ 1649 (kN)
PC WIRE STRAND	TP 200
TYPE	400

MATERIAL LIST (1-SET BRIDGE FALL PREVENTION SYSTEM)

No	NAME	SPECIFICATION	UNIT	QTY	1 PIER	REMARKS
1	PC WIRE STRAND	SWPR	PCS	1		PE-COAT
2	N U T	S45C	SET	2		ZINC PLATING M8 BOLT
3	STOPPER PLATE	CR,NEO PLUS,SS400	PCS	2		
4	SPRING	SW0SCB	SET	2		PE-COAT
5	BUFFER	NEO PLUS,SS400	SET	2		
6	BUFFER	NEO PLUS,SS400	SET	2		
7	PROTECTION CAP	CR or TPE	SET	2		
8	WIRE MESH	SD295	SET	16		
9	SPIRAL	SPCC	SET	2		

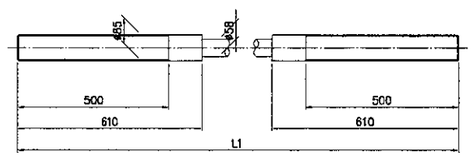

1-PC WIRE STRAND (TP200)
SCALE 1 : 20

① PC鋼より線 (TP200)

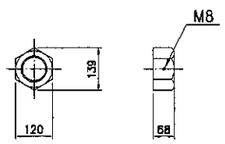

2-N U T
SCALE 1 : 20

② 緩み止め付ナット

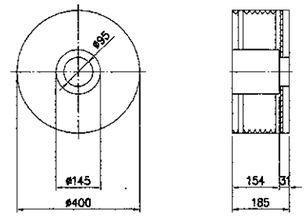

3-STOPPER PLATE
SCALE 1 : 20

③ セーフティストッパー

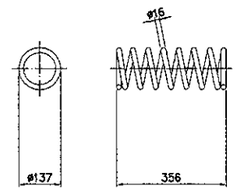

4-SPRING
SCALE 1 : 20

④ コイルスプリング

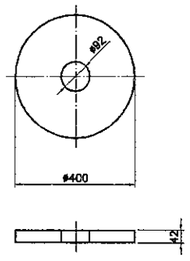

5-BUFFER
SCALE 1 : 20

⑤ 防錆支圧板

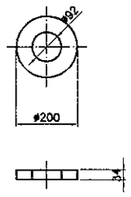

6-BUFFER
SCALE 1 : 20

⑥ 防錆座金

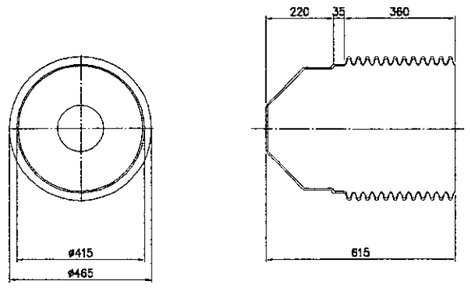

7-PROTECTION CAP
(POLYETHELENE)
SCALE 1 : 20

⑦ 防錆キャップ

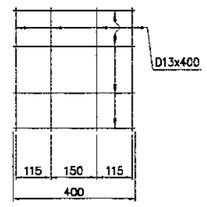

8-WIRE MESH
SCALE 1 : 20

⑧ 用心鉄筋

JAPAN INTERNATIONAL COOPERATION AGENCY KATAHIRA & ENGINEERS INTERNATIONAL	DESIGNED BY	CHECKED BY	SUBMITTED BY	REPUBLIC OF INDONESIA MINISTRY OF PUBLIC WORKS DIRECTORATE GENERAL OF HIGHWAYS	PROJECT AND LOCATION :	SCALE :	DRAWING TITLE :	DRAWING NO :
	Name: S. MATSUI	Name: T. OKUMURA	Name: M. KIUCHI		DETAILED DESIGN STUDY OF NORTH JAVA CORRIDOR FLYOVER PROJECT TANGGULANGIN FLYOVER - CONTRACT PACKAGE 3 (PETERONGAN - TANGGULANGIN) EAST JAVA PROVINCE	1:10, 1:20	DETAIL OF PARAPET, MEDIAN AND RAILING	TSM-013
	Sign	Sign	Sign	APPROVED BY: Ir. HERRY VAZA M,Eng.Sc NIP. : 110038400 — Sign				SHEET NO :
	Date	Date	Date	Date		FULL SIZE A3		13 / 14

NOTES :

1. DIMENSIONS ARE IN MILLIMETERS
2. STRUCTURAL STEEL SECTIONS ARE TO BE GRADE 400 STEEL TO BE BS 4360
3. BOLTS AND SCREWS ARE TO BE GRADE 6.8 TO BS 3692 ALL BOLTS AND SCREWS ARE TO BE GALVANIZED SHERARDIZED OR OTHERWISE CORROSION PROTECTED
4. ALL STEEL WORK AND WELDING TO BE IN ACCORDANCE WITH CLAUSE 57.07 OF THE SPECIFICATION
5. WELDS ARE 5 MM CONTINOUS FILLET WELDS UNLESS STATED OTHERWISE
6. POSTS ARE TO BE FIXED TRULY VERTICAL
7. RAIL JOINT TO BE LOCATED AT THE QUARTER POINT OF A PANEL
8. RAIL EXPANSION JOINTS ARE TO BE PROVIDED AT ALL BRIDGE DECK AND APPROACH RAMP EXPANSION JOINTS
9. RAILS ARE TO BE CONTINOUS OVER TWO POSTS MAXIMUM RAIL LENGTH IS NOT TO EXCEED 5000
10. ALL FABRICATED STEELWORK IS TO BE HOT DIP GALVANIZED
11. AFTER ERECTION ALL STEELWORK IS TO BE PAINTED TO THE REINFORCEMENTS OF SECTION 57.07 OF THE SPESIFICATION

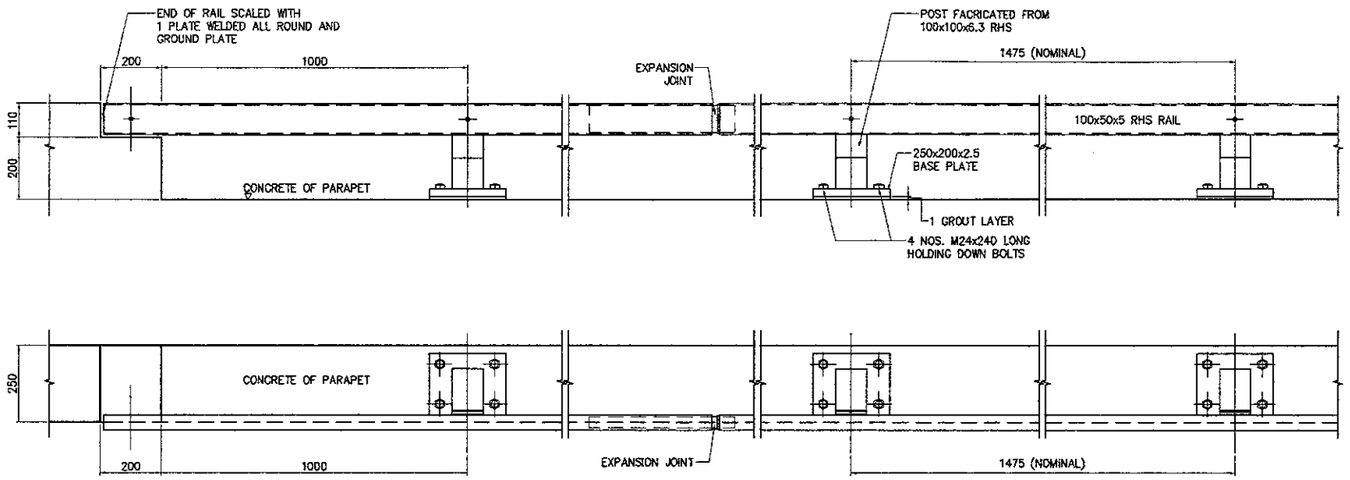

DETAILS FOR PROFILED PLINTH

SCALE : 1:20

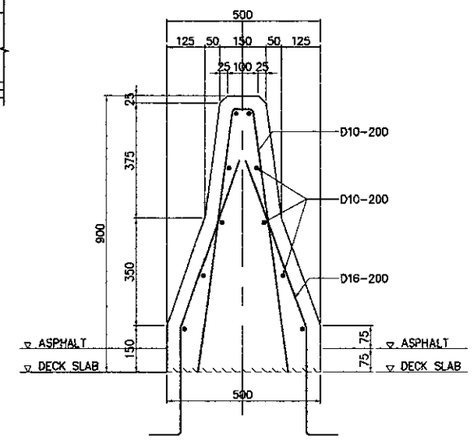

DETAIL OF MEDIAN

SCALE : 1:20

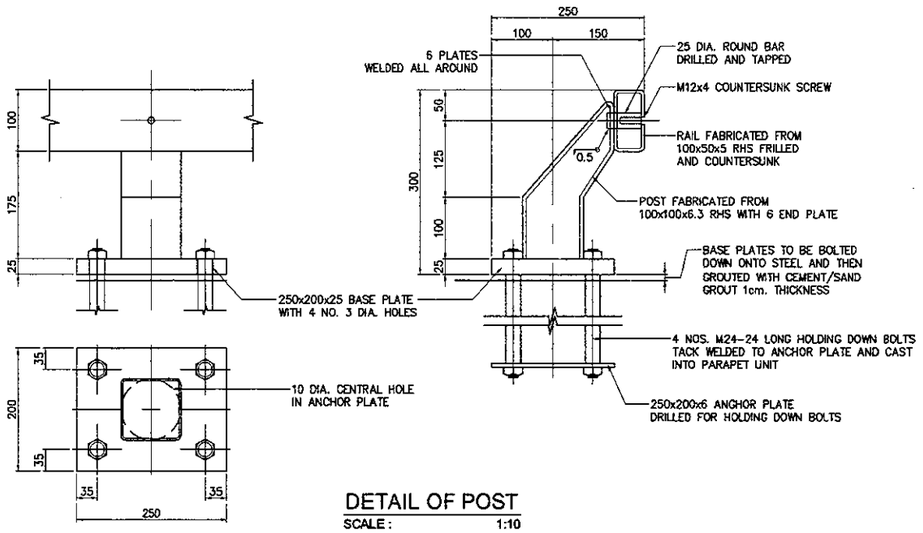

DETAIL OF POST

SCALE : 1:10

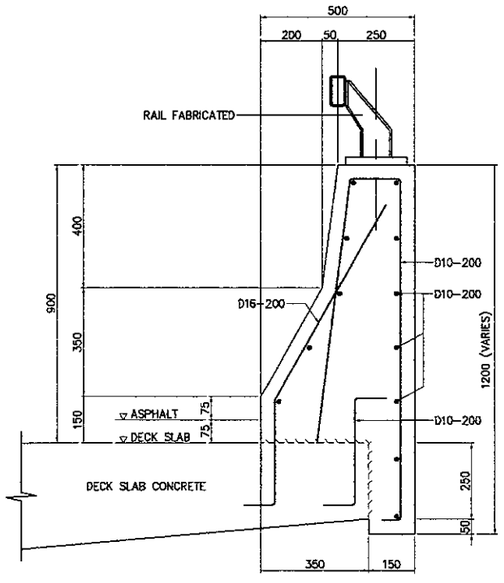

DETAIL OF PARAPET

SCALE : 1:20

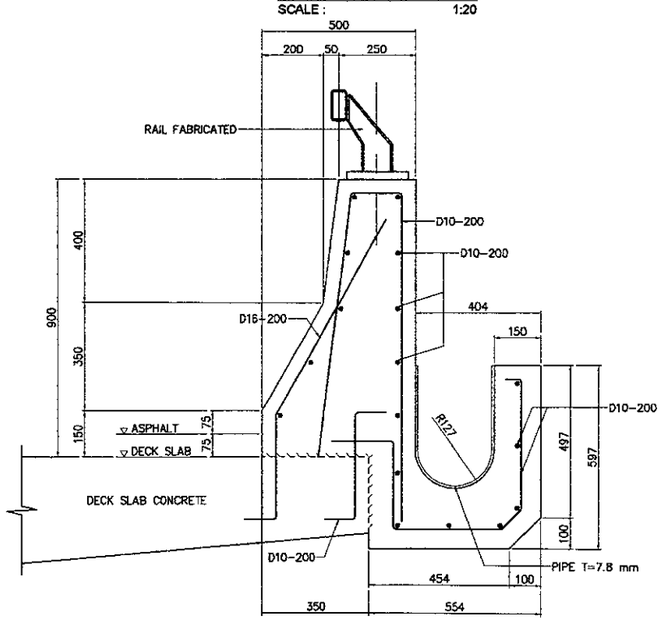

DETAIL OF OUTER GUTTER

SCALE : 1:20

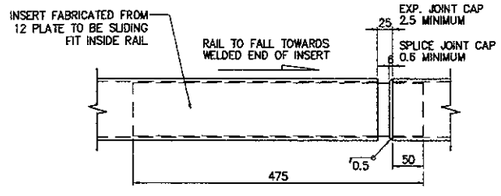

DETAILS OF JOINT

SCALE : 1:10

JAPAN INTERNATIONAL COOPERATION AGENCY KATAHIRA & ENGINEERS INTERNATIONAL	DESIGNED BY		CHECKED BY		SUBMITTED BY		REPUBLIC OF INDONESIA MINISTRY OF PUBLIC WORKS DIRECTORATE GENERAL OF HIGHWAYS				PROJECT AND LOCATION :	SCALE :	DRAWING TITLE :	DRAWING NO :
	Name	S. MATSUI	Name	T. OKUMURA	Name	M. KIUCHI					DETAILED DESIGN STUDY OF NORTH JAVA CORRIDOR FLYOVER PROJECT TANGGULANGIN FLYOVER - CONTRACT PACKAGE 3 (PETERONGAN - TANGGULANGIN) EAST JAVA PROVINCE	1:10, 1:20 1:1000	SAFETY FENCE	TSM-014
	Sign		Sign		Sign		APPROVED BY	Ir. HERRY VAZA M,Eng.Sc NIP. : 110038400	Sign					SHEET NO :
	Date		Date		Date				Date			FULL SIZE A3		14 / 14

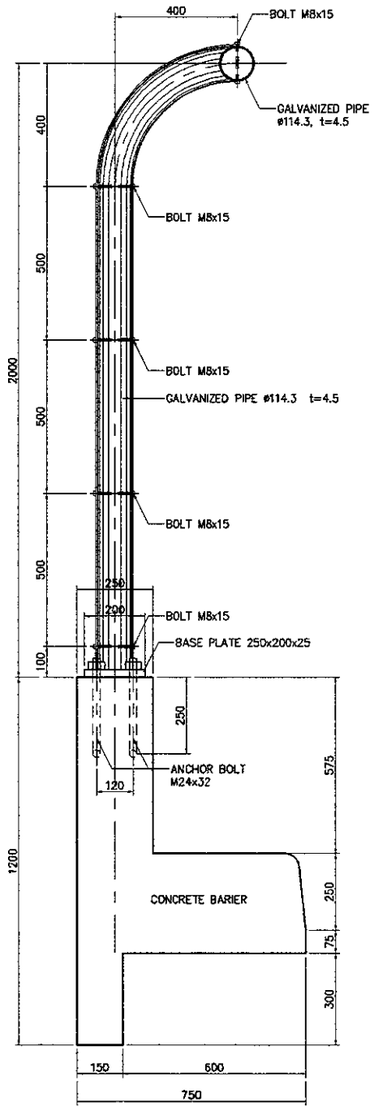

SECTION 1-1
SCALE : 1:20

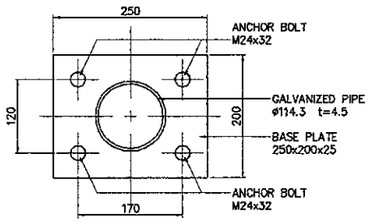

DETAIL OF BASE PLATE
SCALE : 1:10

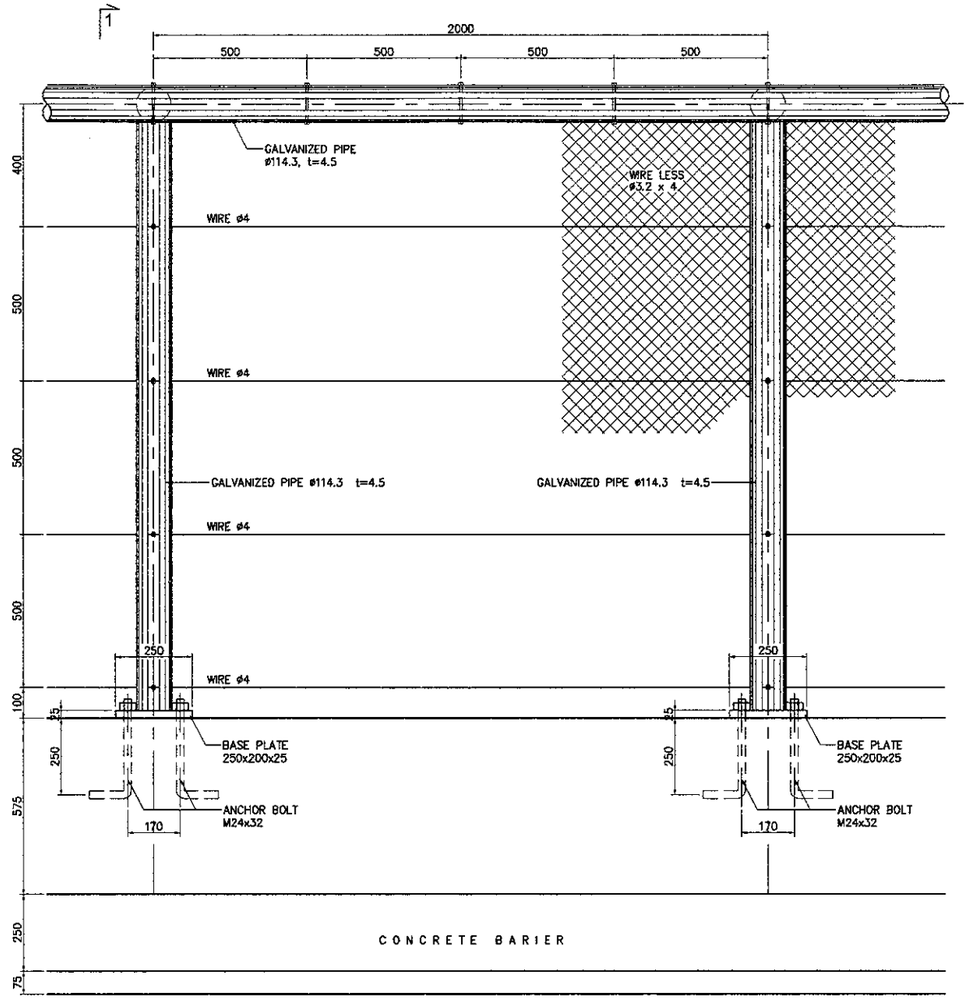

ELEVATION
SCALE : 1:20

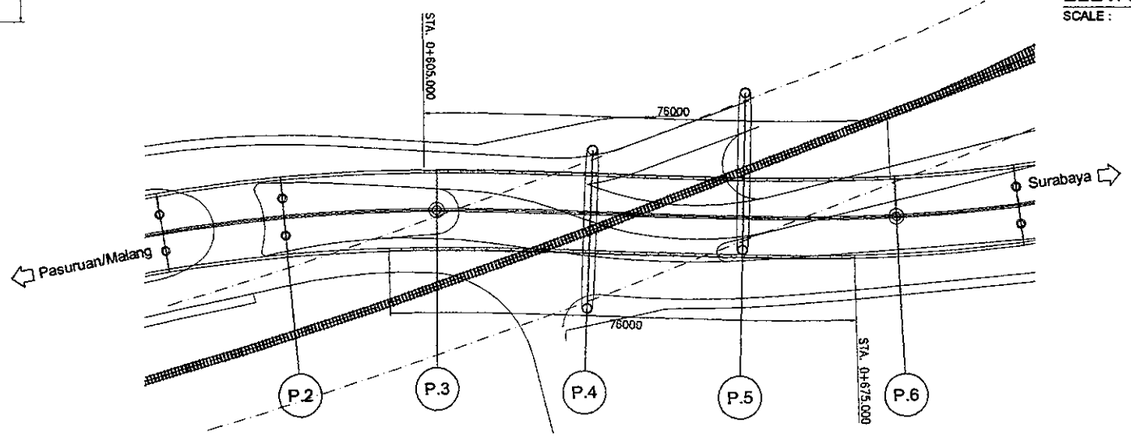

KEY MAP
SCALE : 1:1000

JAPAN INTERNATIONAL
COOPERATION AGENCY

DIRECTORATE GENERAL OF HIGHWAY
MINISTRY OF PUBLIC WORKS
REPUBLIC OF INDONESIA

SUBSTRUCTURES

KATAHIRA & ENGINEERS INTERNATIONAL

JAPAN INTERNATIONAL COOPERATION AGENCY KATAHIRA & ENGINEERS INTERNATIONAL	DESIGNED BY	CHECKED BY	SUBMITTED BY	REPUBLIC OF INDONESIA MINISTRY OF PUBLIC WORKS DIRECTORATE GENERAL OF HIGHWAYS	PROJECT AND LOCATION :	SCALE :	DRAWING TITLE :	DRAWING NO :
	Name: A. GOURLEY	Name: T. OKUMURA	Name: M. KIUCHI		DETAILED DESIGN STUDY OF NORTH JAVA CORRIDOR FLYOVER PROJECT TANGGULANGIN FLYOVER - CONTRACT PACKAGE 3 (PETERONGAN -TANGGULANGIN) EAST JAVA PROVINCE	1 : 4000 1 : 100 1 : 40	**ABUTMENT LAYOUT & DIMENSIONS (ABUT. A1)**	TSB-001
	Sign	Sign	Sign	APPROVED BY: Ir. HERRY VAZA M,Eng.Sc				SHEET NO :
	Date	Date	Date	NIP. : 11003840D / Sign / Date		FULL SIZE A3		01 / 45

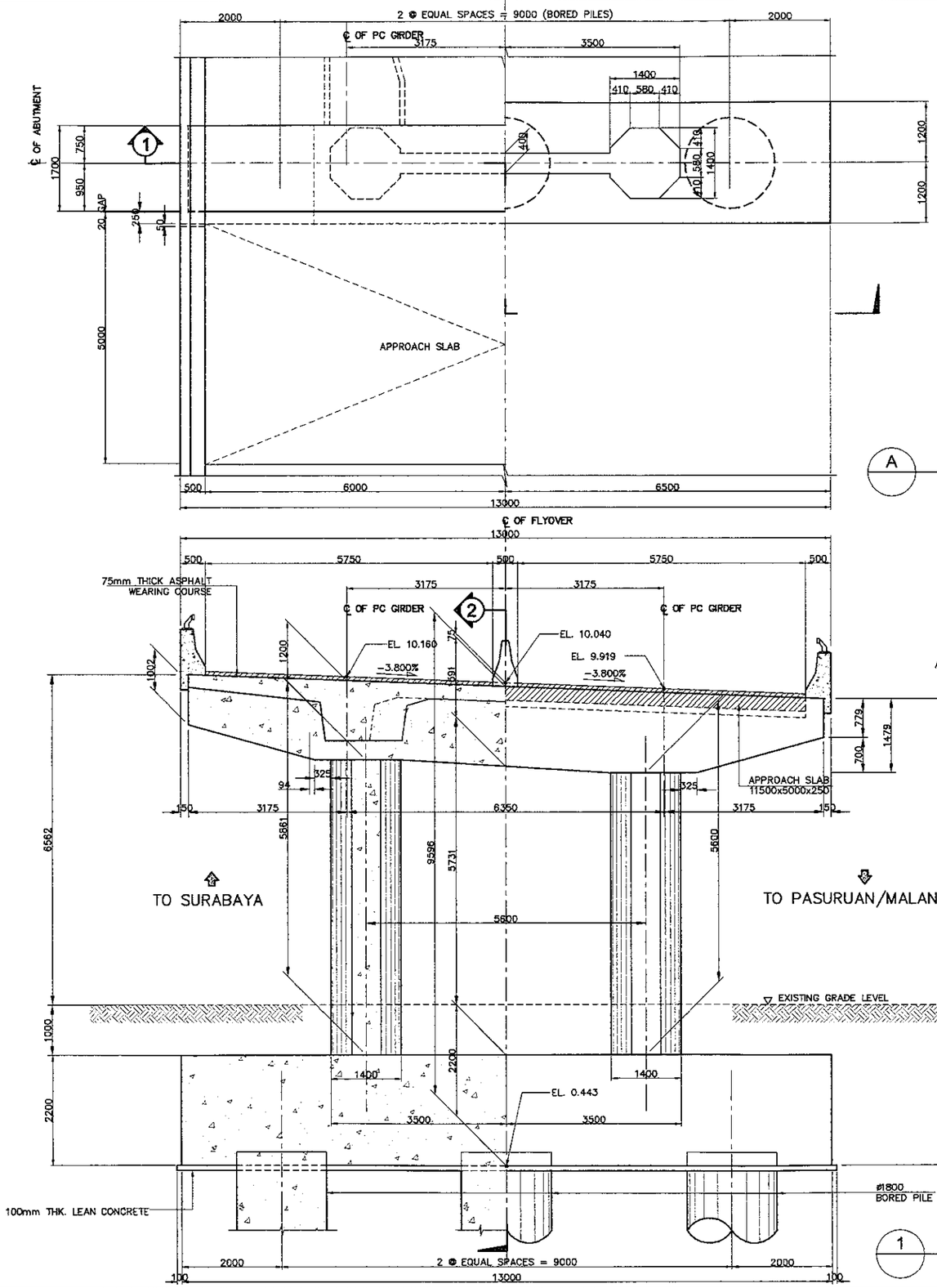

A **PLAN** SCALE 1:100

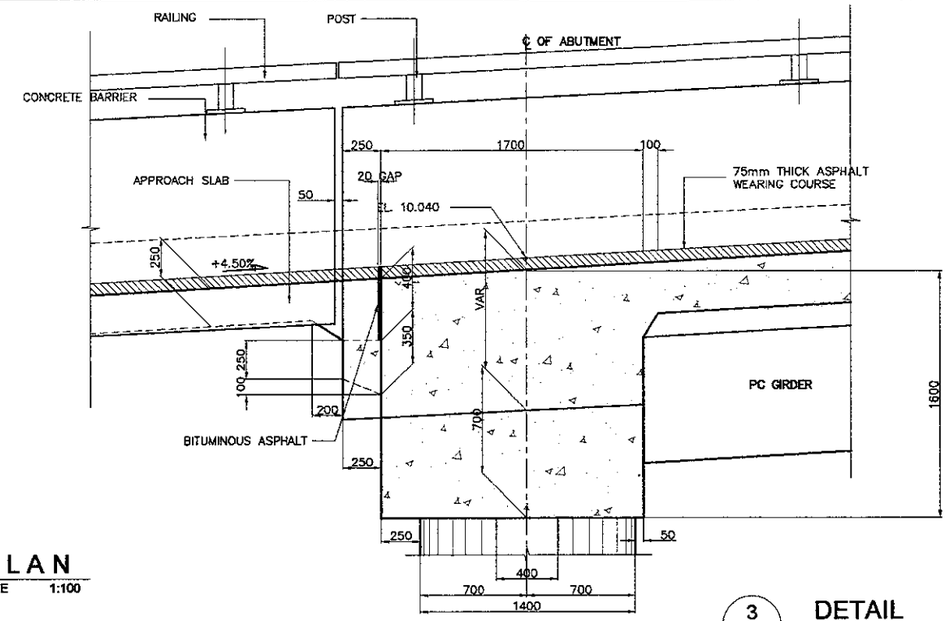

3 **DETAIL** SCALE 1:40

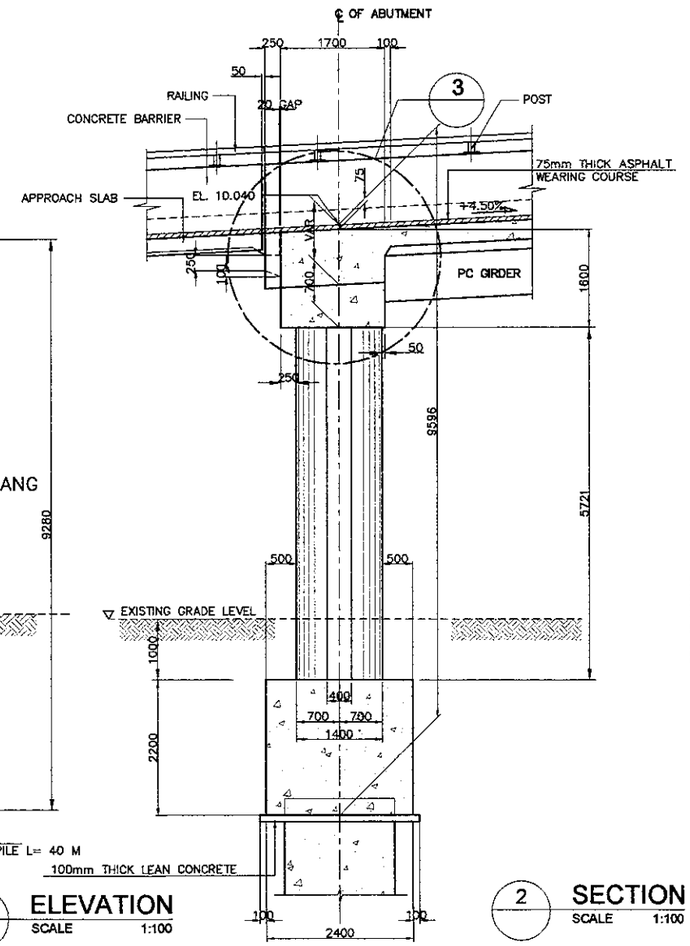

1 **ELEVATION** SCALE 1:100

2 **SECTION** SCALE 1:100

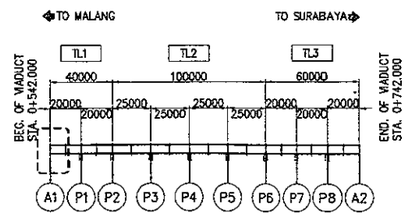

KEY PLAN SCALE 1:4000

NOTES :
1. ALL DIMENSIONS ARE IN MILLIMETER
2. ELEVATIONS AREA IN METERS

PRINTED: OCT. 18, 2006

JAPAN INTERNATIONAL COOPERATION AGENCY KATAHIRA & ENGINEERS INTERNATIONAL	DESIGNED BY	CHECKED BY	SUBMITTED BY	REPUBLIC OF INDONESIA MINISTRY OF PUBLIC WORKS DIRECTORATE GENERAL OF HIGHWAYS	PROJECT AND LOCATION :	SCALE :	DRAWING TITLE :	DRAWING NO :
	Name: A. GOURLEY	Name: T. OKUMURA	Name: M. KIUCHI		DETAILED DESIGN STUDY OF NORTH JAVA CORRIDOR FLYOVER PROJECT TANGGULANGIN FLYOVER - CONTRACT PACKAGE 3 (PETERONGAN - TANGGULANGIN) EAST JAVA PROVINCE	1 : 40 1 : 60 1 : 150 1 : 4000 FULL SIZE A3	PIER LAYOUT P1 (FIXED)	TSB-002
	Sign	Sign	Sign	APPROVED BY: Ir. HERRY VAZA M,Eng.Sc NIP. : 110038400				SHEET NO : 02 / 45
	Date	Date	Date	Sign / Date				

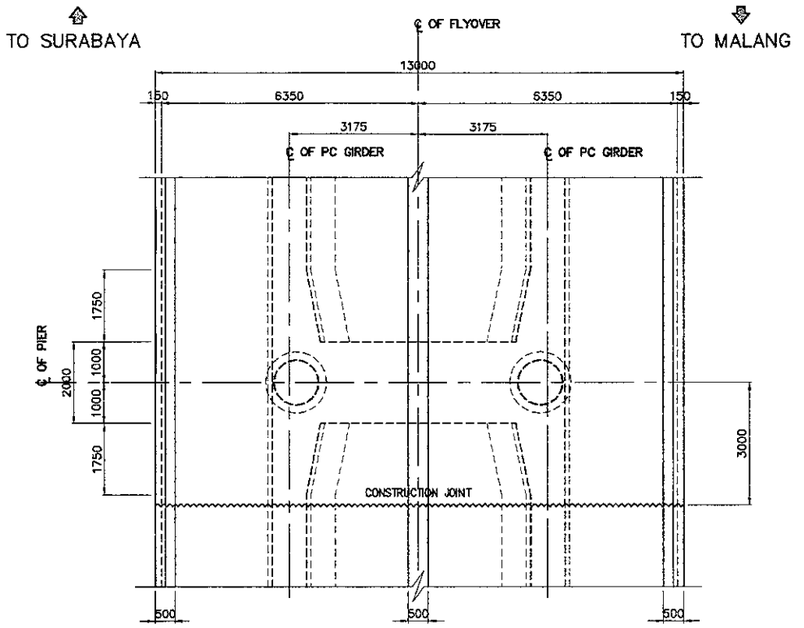

2 PLAN
SCALE : 1:150

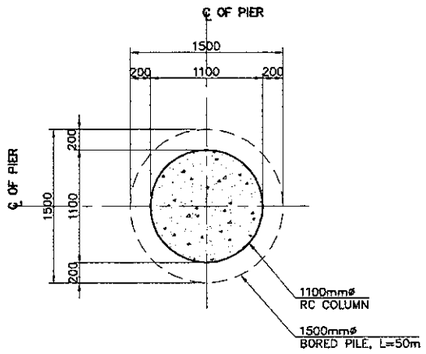

4 SECTION
SCALE : 1:60

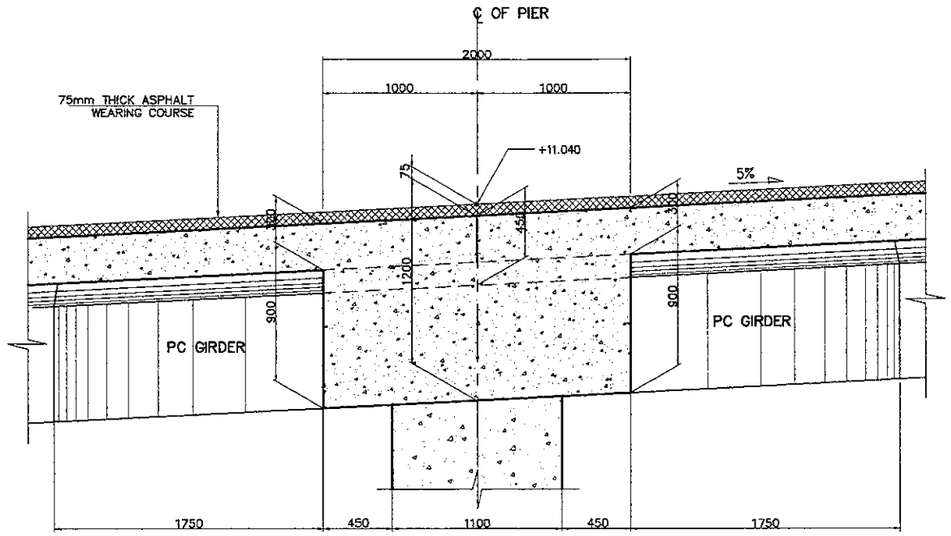

5 DETAIL
SCALE : 1:40

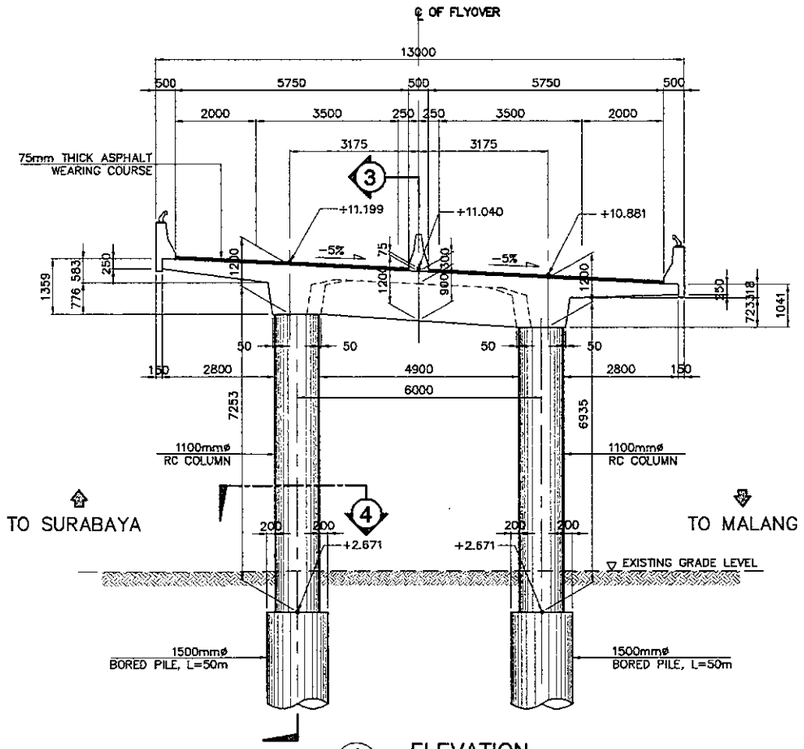

1 ELEVATION
SCALE : 1:150

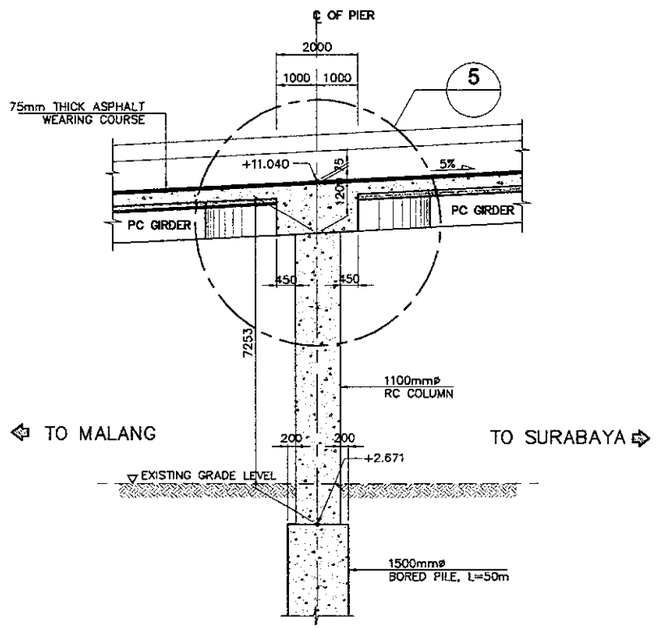

3 SECTION
SCALE : 1:150

NOTES :
1. ALL DIMENSIONS ARE IN MILLIMETER
2. ELEVATIONS ARE IN METERS

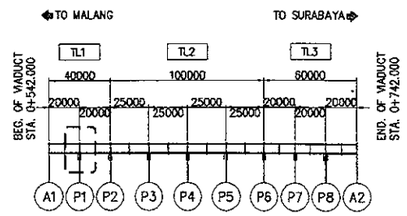

KEY PLAN
SCALE : 1:4000

PRINTED: OCT. 18, 2006

JAPAN INTERNATIONAL COOPERATION AGENCY KATAHIRA & ENGINEERS INTERNATIONAL	DESIGNED BY	CHECKED BY	SUBMITTED BY	REPUBLIC OF INDONESIA MINISTRY OF PUBLIC WORKS DIRECTORATE GENERAL OF HIGHWAYS	PROJECT AND LOCATION :	SCALE :	DRAWING TITLE :	DRAWING NO :
	Name: A. GOURLEY	Name: T. OKUMURA	Name: M. KIUCHI		DETAILED DESIGN STUDY OF NORTH JAVA CORRIDOR FLYOVER PROJECT TANGGULANGIN FLYOVER - CONTRACT PACKAGE 3 (PETERONGAN - TANGGULANGIN) EAST JAVA PROVINCE	1 : 40 1 : 60 1 : 150 1 : 4000	PIER LAYOUT P2 (EXP.)	TSB-003
	Sign	Sign	Sign	APPROVED BY: Ir. HERRY VAZA M,Eng.Sc NIP. : 110038400 — Sign		FULL SIZE A3		SHEET NO : 03 / 45
	Date	Date	Date	Date				

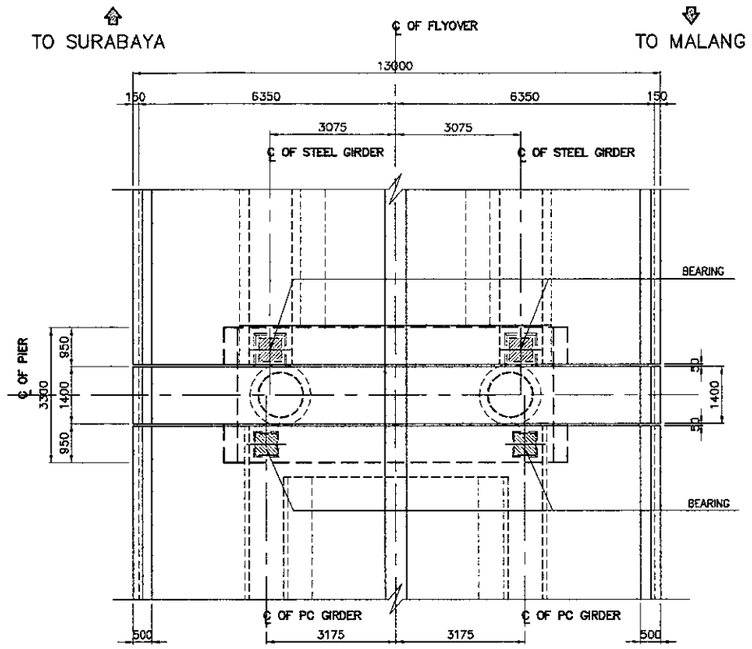

2 PLAN
SCALE : 1:150

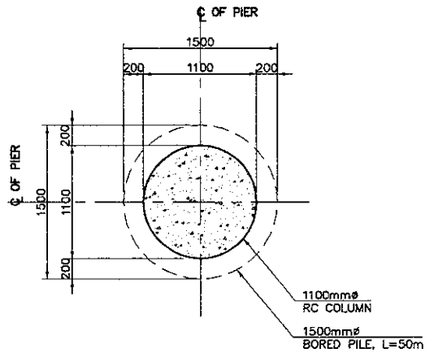

4 SECTION
SCALE : 1:60

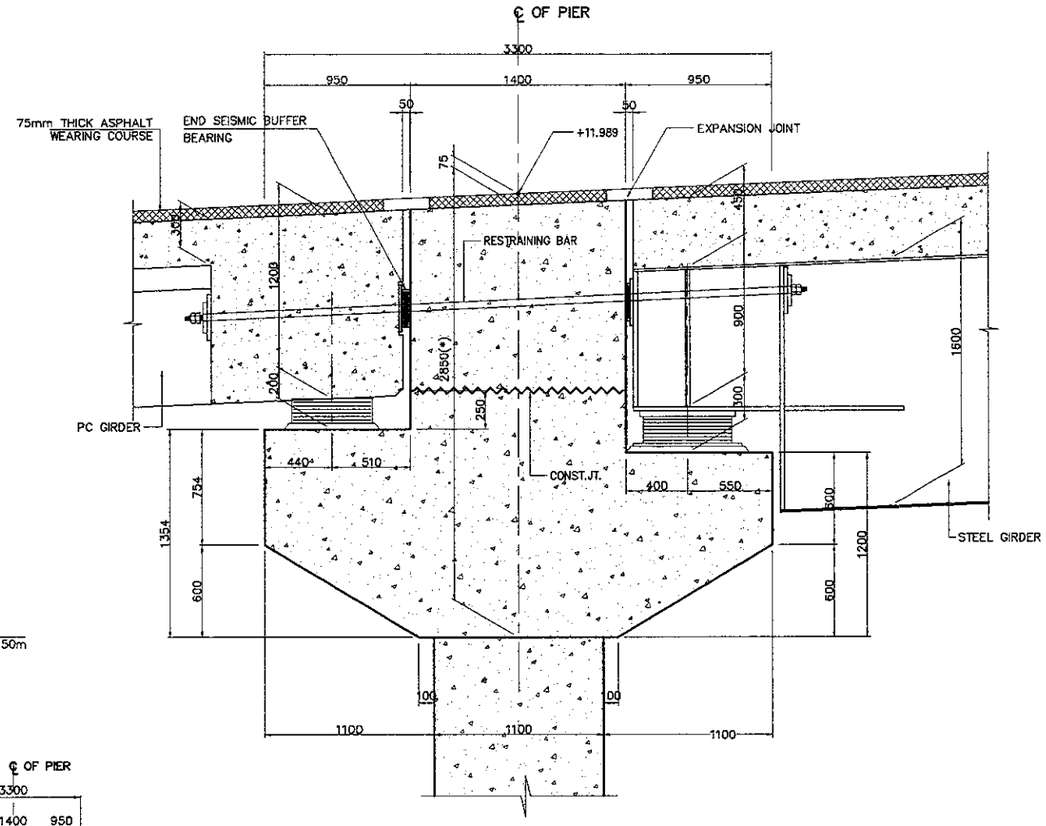

5 DETAIL
SCALE : 1:40

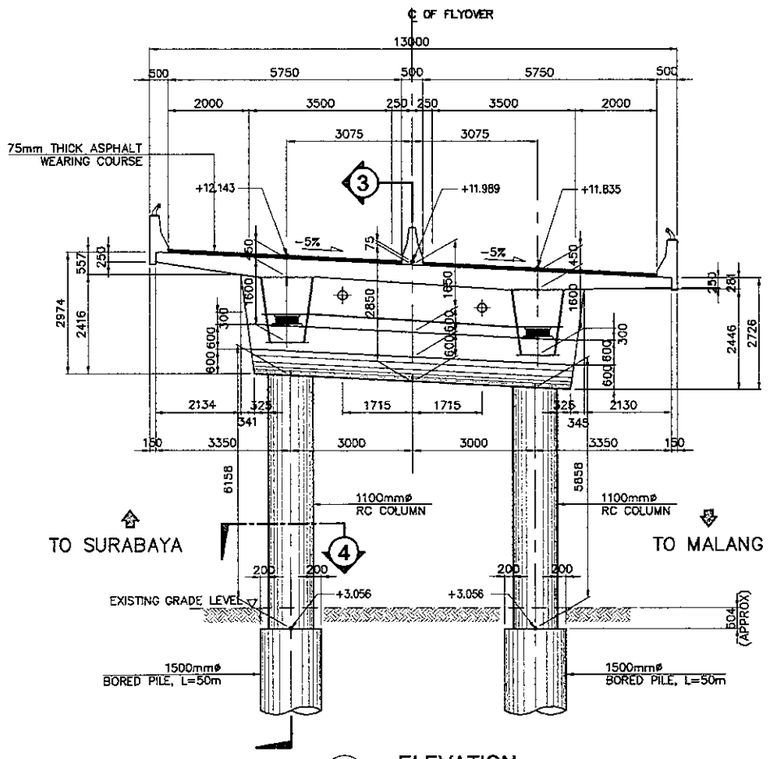

1 ELEVATION
SCALE : 1:150

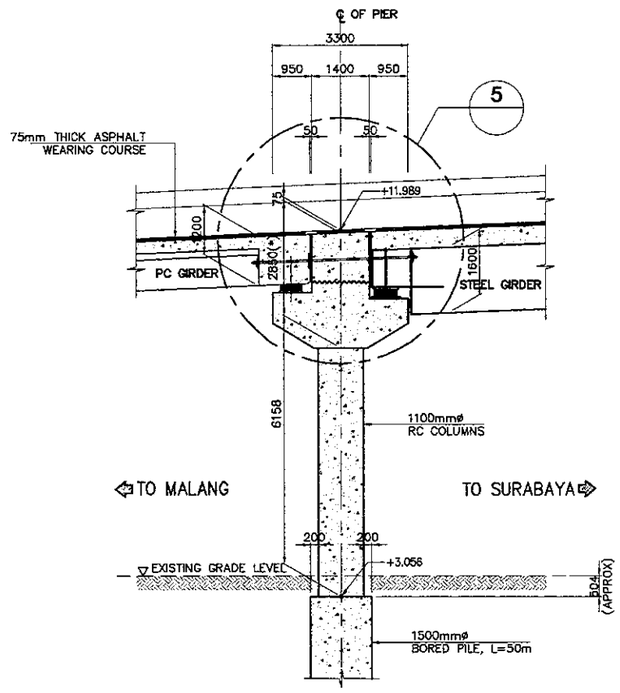

3 SECTION
SCALE : 1:150

(*) NOTES :
1. DIMENSION GIVEN AT ? ALIGNMENT OF FLYOVER
2. DIMENSION VARIES AT CROSS DECK

NOTES :
1. ALL DIMENSIONS ARE IN MILLIMETER
2. ELEVATIONS ARE IN METERS

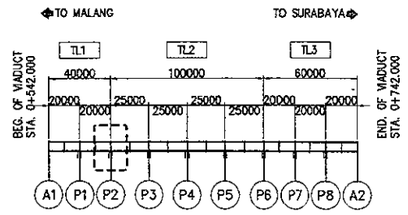

KEY PLAN
SCALE : 1:4000

PRINTED: OCT. 18, 2006

JAPAN INTERNATIONAL COOPERATION AGENCY KATAHIRA & ENGINEERS INTERNATIONAL	DESIGNED BY	CHECKED BY	SUBMITTED BY	REPUBLIC OF INDONESIA MINISTRY OF PUBLIC WORKS DIRECTORATE GENERAL OF HIGHWAYS	PROJECT AND LOCATION :	SCALE :	DRAWING TITLE :	DRAWING NO :
	Name: A. GOURLEY	Name: T. OKUMURA	Name: M. KIUCHI		DETAILED DESIGN STUDY OF NORTH JAVA CORRIDOR FLYOVER PROJECT TANGGULANGIN FLYOVER - CONTRACT PACKAGE 3 (PETERONGAN - TANGGULANGIN) EAST JAVA PROVINCE	1 : 60 1 : 150 1 : 2000	PIER LAYOUT P3 (FIXED)	TSB-004
	Sign	Sign	Sign	APPROVED BY: Ir. HERRY VAZA M.Eng.Sc NIP. : 110038400				SHEET NO : 04 / 45
	Date	Date	Date	Sign / Date		FULL SIZE A3		

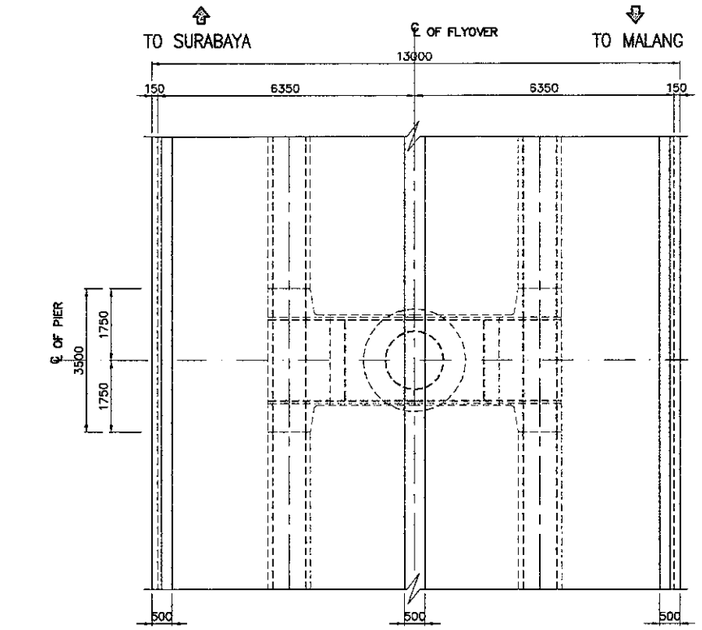

2 PLAN
SCALE : 1:150

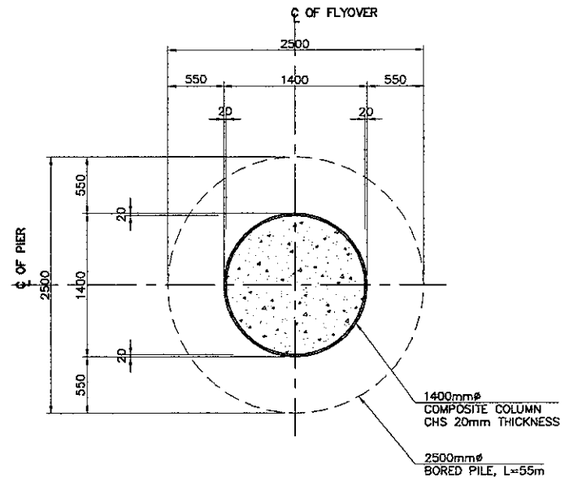

4 SECTION
SCALE : 1:60

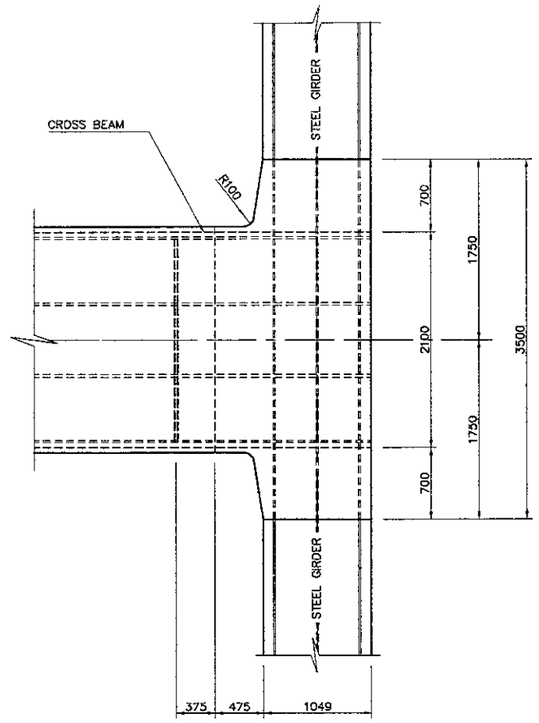

5 DETAIL
SCALE : 1:60

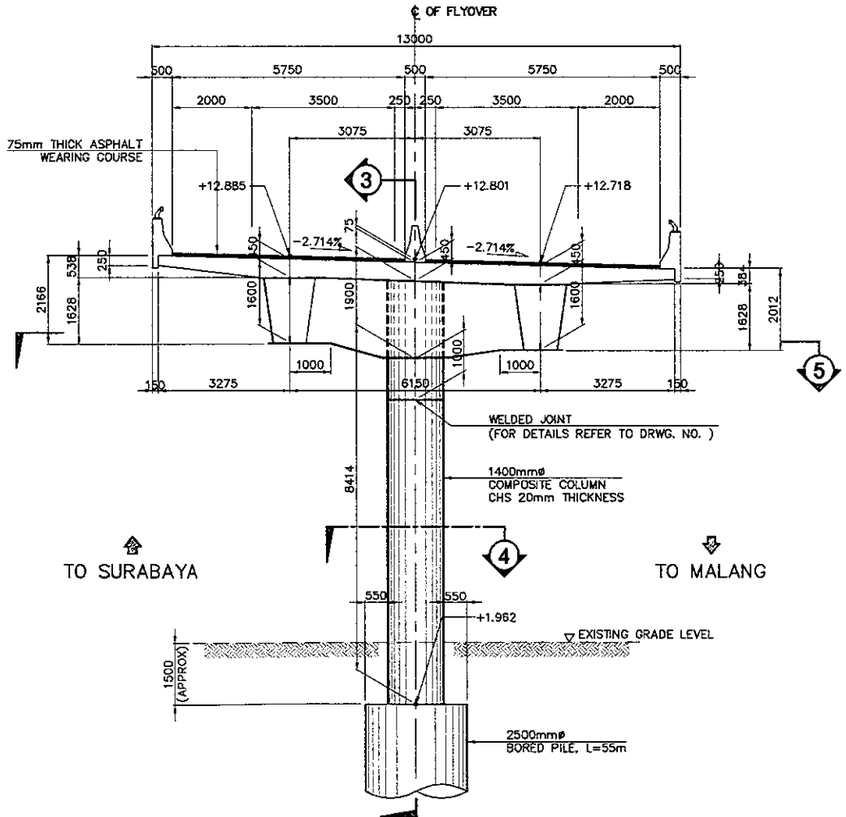

1 ELEVATION
SCALE : 1:150

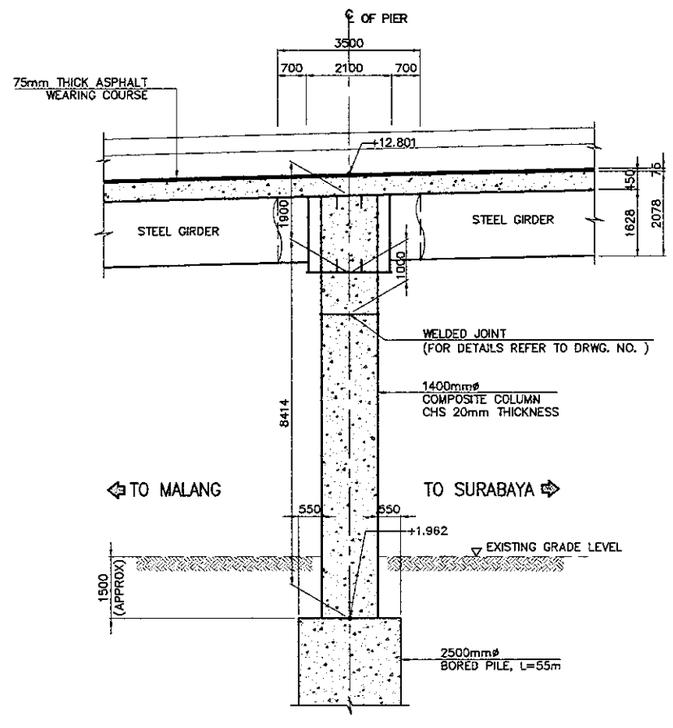

3 SECTION
SCALE : 1:150

NOTES :
1. ALL DIMENSIONS ARE IN MILLIMETER
2. ELEVATIONS ARE IN METERS

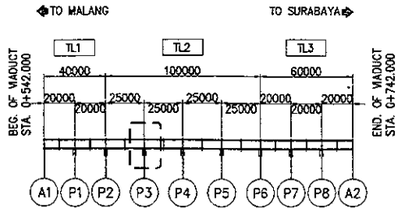

* KEY PLAN
SCALE : 1:4000

PRINTED: OCT. 18, 2006

JICA JAPAN INTERNATIONAL COOPERATION AGENCY / KATAHIRA & ENGINEERS INTERNATIONAL	DESIGNED BY	CHECKED BY	SUBMITTED BY	REPUBLIC OF INDONESIA MINISTRY OF PUBLIC WORKS DIRECTORATE GENERAL OF HIGHWAYS	PROJECT AND LOCATION :	SCALE :	DRAWING TITLE :	DRAWING NO :
	Name: A. GOURLEY	Name: T. OKUMURA	Name: M. KIUCHI		DETAILED DESIGN STUDY OF NORTH JAVA CORRIDOR FLYOVER PROJECT TANGGULANGIN FLYOVER - CONTRACT PACKAGE 3 (PETERONGAN - TANGGULANGIN) EAST JAVA PROVINCE	1 : 60 1 : 150 1 : 4000	PIER LAYOUT P4 (PORTAL)	TSB-005
	Sign	Sign	Sign	APPROVED BY: Ir. HERRY VAZA M.Eng.Sc NIP. : 110038400 — Sign		FULL SIZE A3		SHEET NO : 05 / 45
	Date	Date	Date	Date				

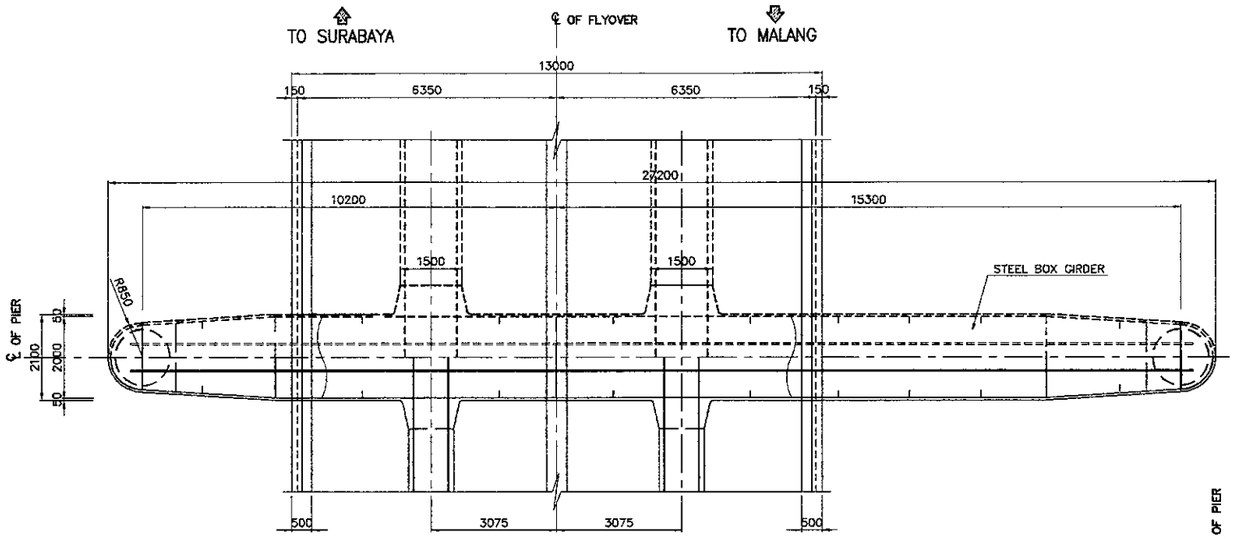

2 PLAN
SCALE : 1:150

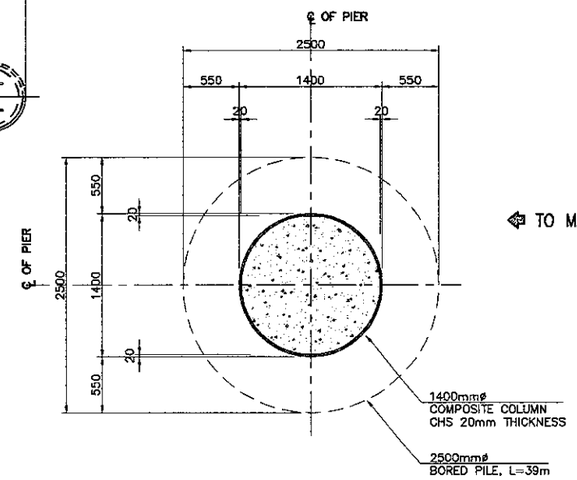

3 SECTION
SCALE : 1:60

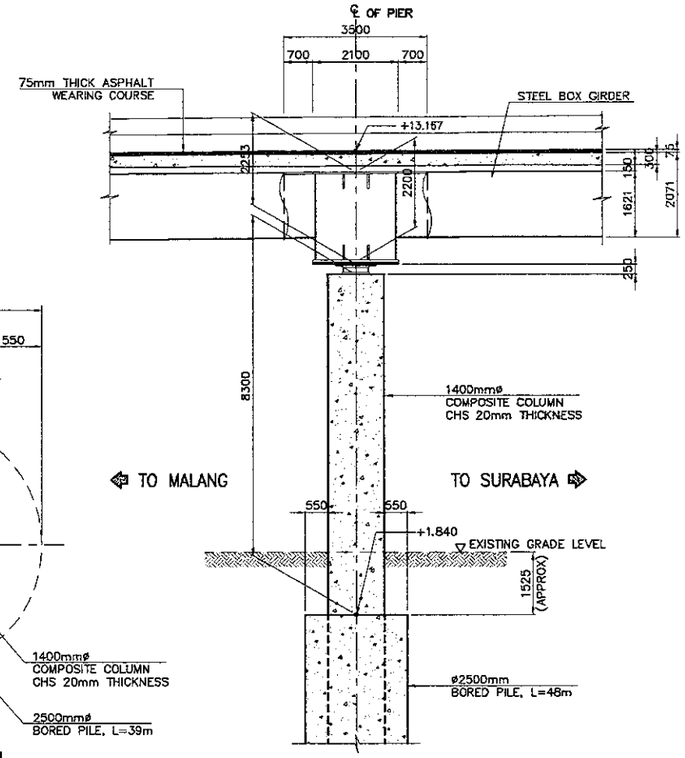

4 SECTION
SCALE : 1:150

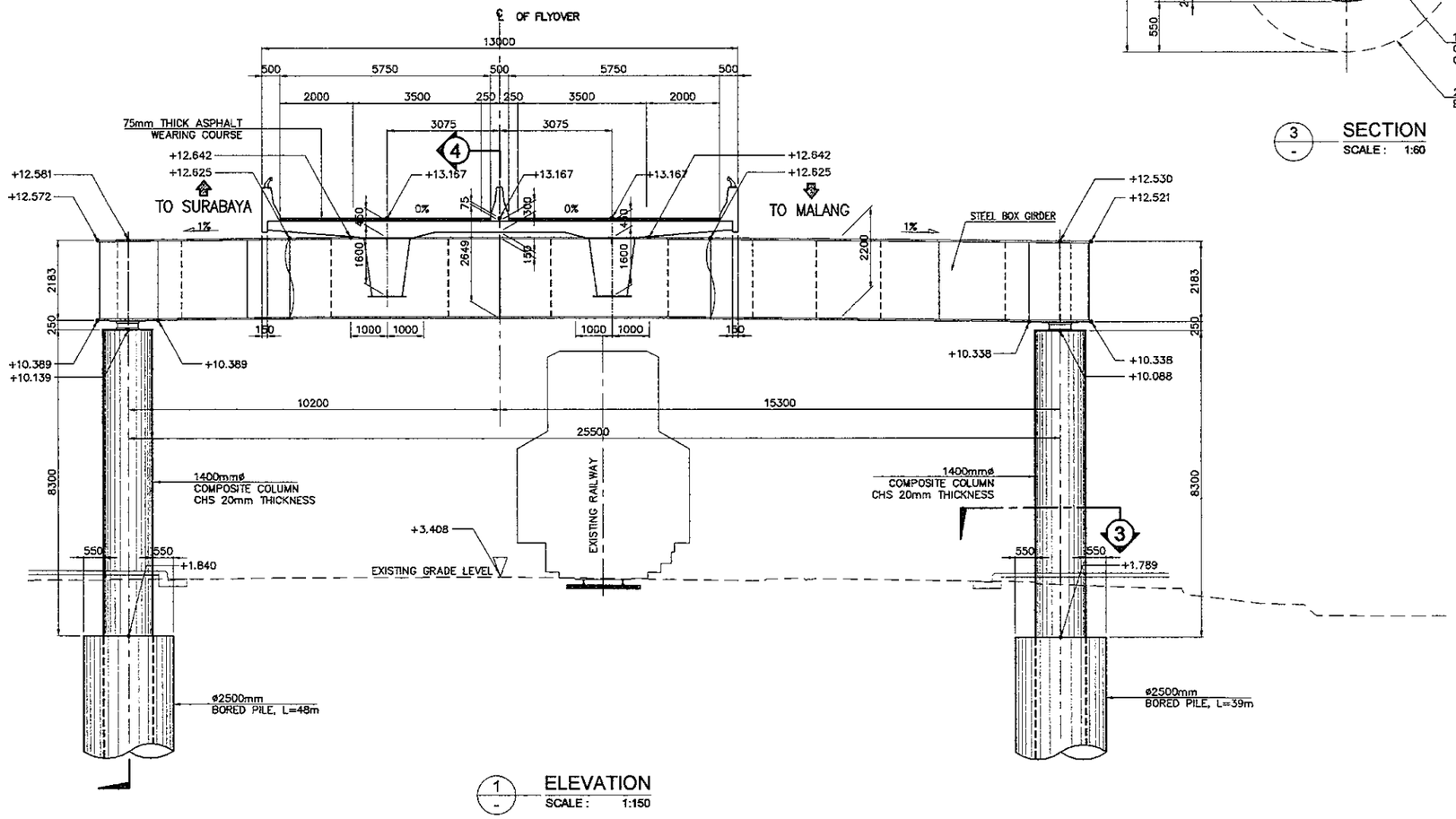

1 ELEVATION
SCALE : 1:150

NOTES :
1. ALL DIMENSIONS ARE IN MILLIMETER
2. ELEVATIONS ARE IN METERS

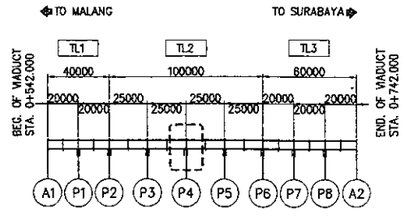

KEY PLAN
SCALE : 1:4000

PRINTED: OCT. 18, 2006

JAPAN INTERNATIONAL COOPERATION AGENCY KATAHIRA & ENGINEERS INTERNATIONAL	DESIGNED BY	CHECKED BY	SUBMITTED BY	REPUBLIC OF INDONESIA MINISTRY OF PUBLIC WORKS DIRECTORATE GENERAL OF HIGHWAYS	PROJECT AND LOCATION :	SCALE :	DRAWING TITLE :	DRAWING NO :
	Name: A. GOURLEY	Name: T. OKUMURA	Name: M. KIUCHI		DETAILED DESIGN STUDY OF NORTH JAVA CORRIDOR FLYOVER PROJECT TANGGULANGIN FLYOVER - CONTRACT PACKAGE 3 (PETERONGAN - TANGGULANGIN) EAST JAVA PROVINCE	1 : 60 1 : 150 1 : 4000	PIER LAYOUT P5 (PORTAL)	TSB-006
	Sign	Sign	Sign	APPROVED BY: Ir. HERRY VAZA M,Eng.Sc NIP. : 110038400 — Sign				SHEET NO : 06 / 45
	Date	Date	Date	Date		FULL SIZE A3		

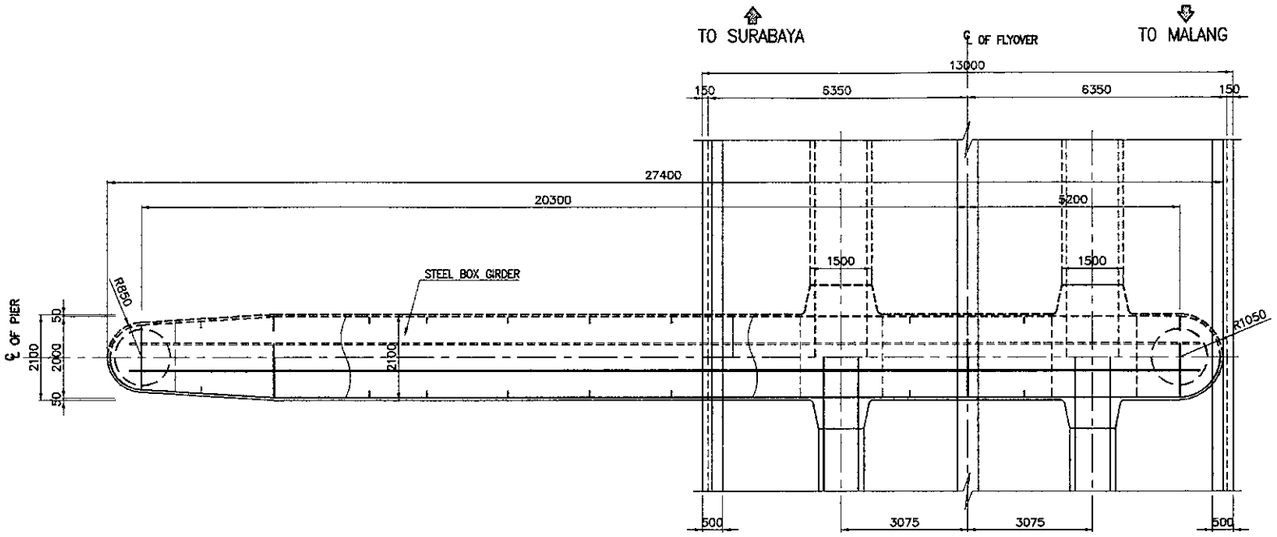

2 — PLAN
SCALE : 1:150

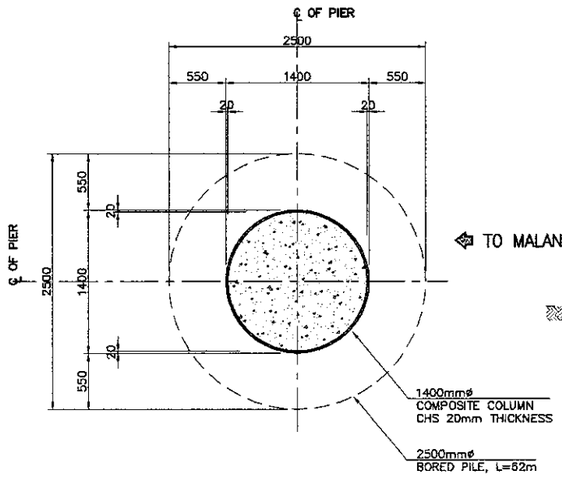

3 — SECTION
SCALE : 1:60

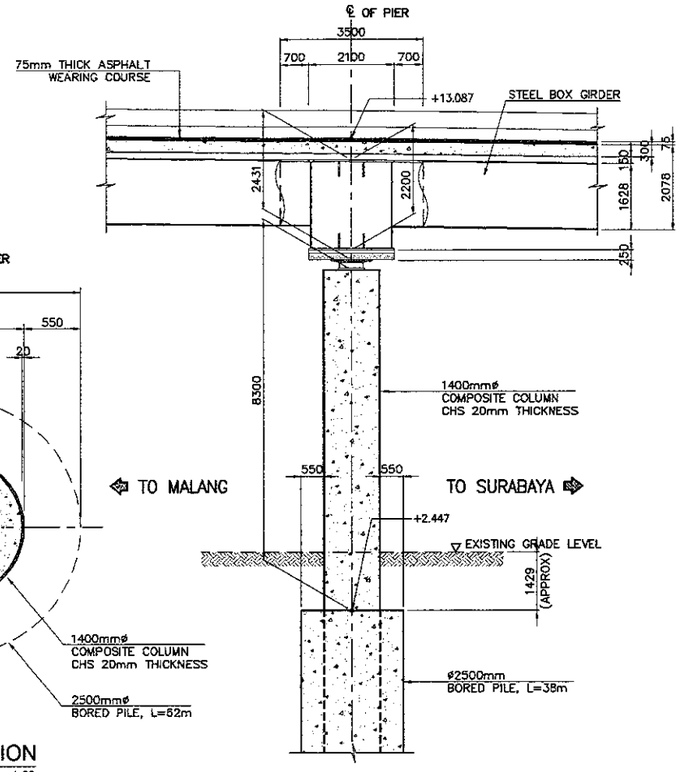

4 — SECTION
SCALE : 1:150

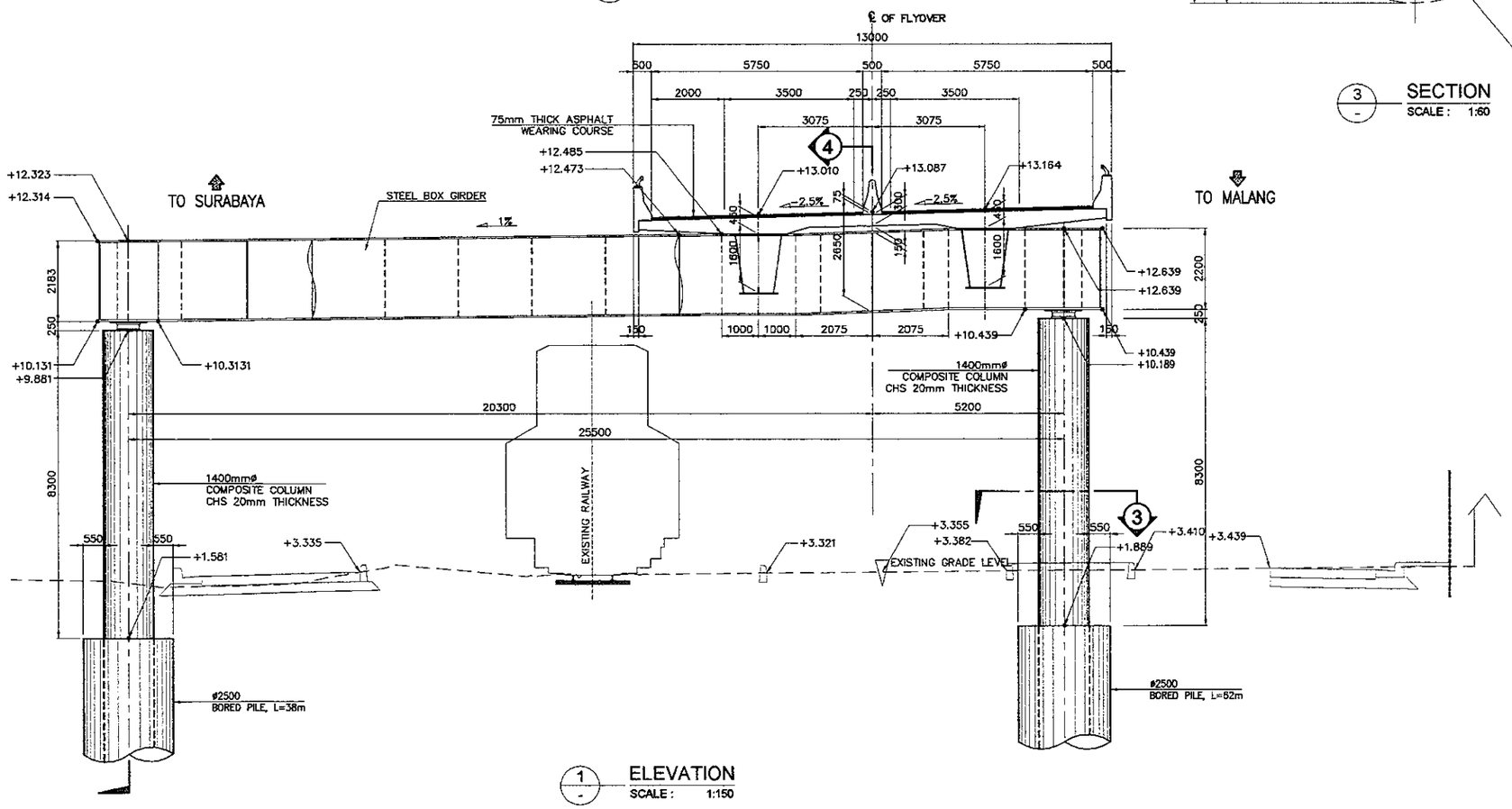

1 — ELEVATION
SCALE : 1:150

NOTES :
1. ALL DIMENSIONS ARE IN MILLIMETER
2. ELEVATIONS ARE IN METERS

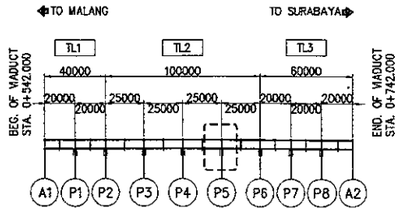

* — KEY PLAN
SCALE : 1:4000

PRINTED: OCT. 18, 2006

JICA JAPAN INTERNATIONAL COOPERATION AGENCY / KEI KATAHIRA & ENGINEERS INTERNATIONAL	DESIGNED BY	CHECKED BY	SUBMITTED BY	REPUBLIC OF INDONESIA MINISTRY OF PUBLIC WORKS DIRECTORATE GENERAL OF HIGHWAYS	PROJECT AND LOCATION :	SCALE :	DRAWING TITLE :	DRAWING NO :
	Name: A. GOURLEY	Name: T. OKUMURA	Name: M. KIUCHI	APPROVED BY: Ir. HERRY VAZA M,Eng.Sc NIP. : 110036400	DETAILED DESIGN STUDY OF NORTH JAVA CORRIDOR FLYOVER PROJECT TANGGULANGIN FLYOVER - CONTRACT PACKAGE 3 (PETERONGAN - TANGGULANGIN) EAST JAVA PROVINCE	1 : 40 1 : 60 1 : 150 1 : 4000	PIER LAYOUT P6 (EXP.)	TSB-007
	Sign	Sign	Sign	Sign		FULL SIZE A3		SHEET NO : 07 / 45
	Date	Date	Date	Date				

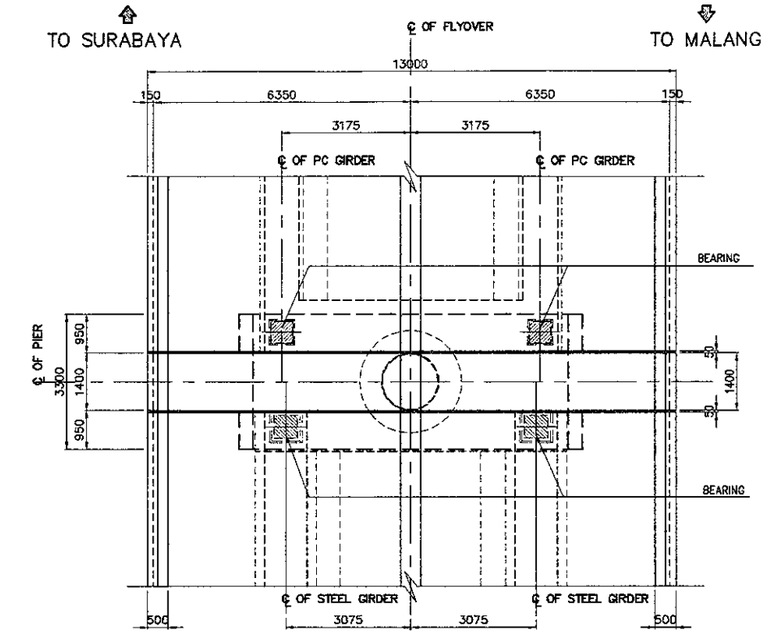

2 PLAN
SCALE : 1:150

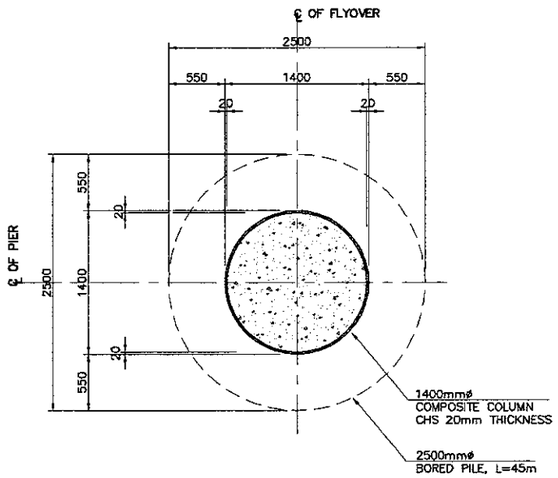

4 SECTION
SCALE : 1:60

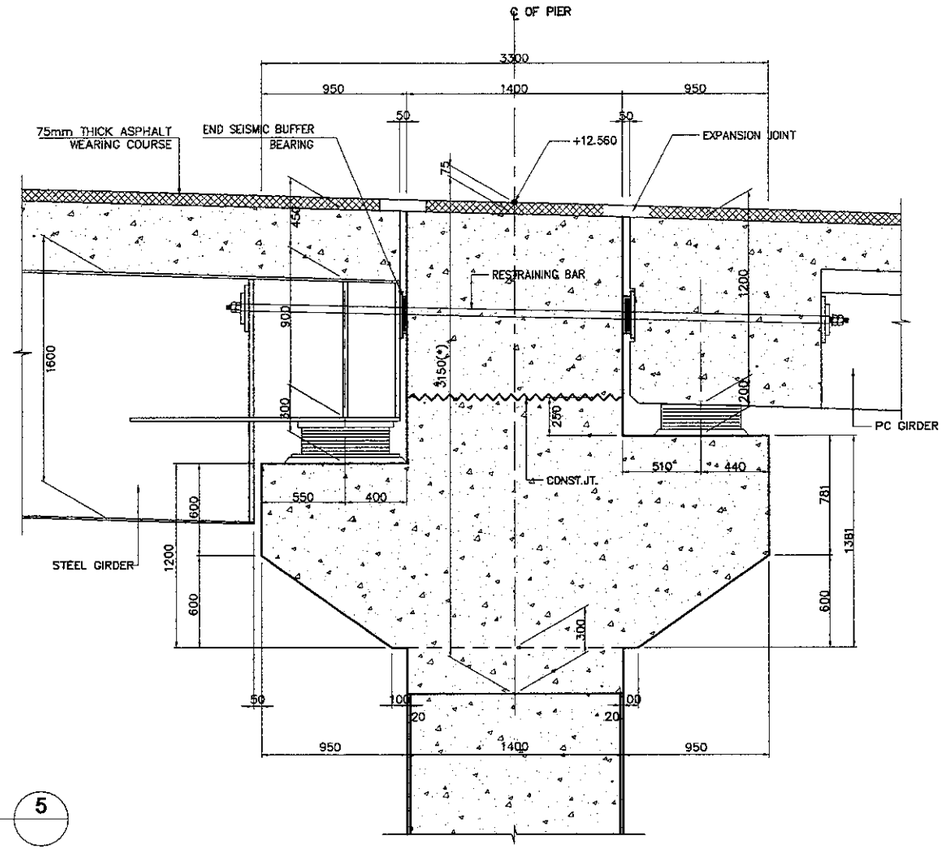

5 DETAIL
SCALE : 1:40

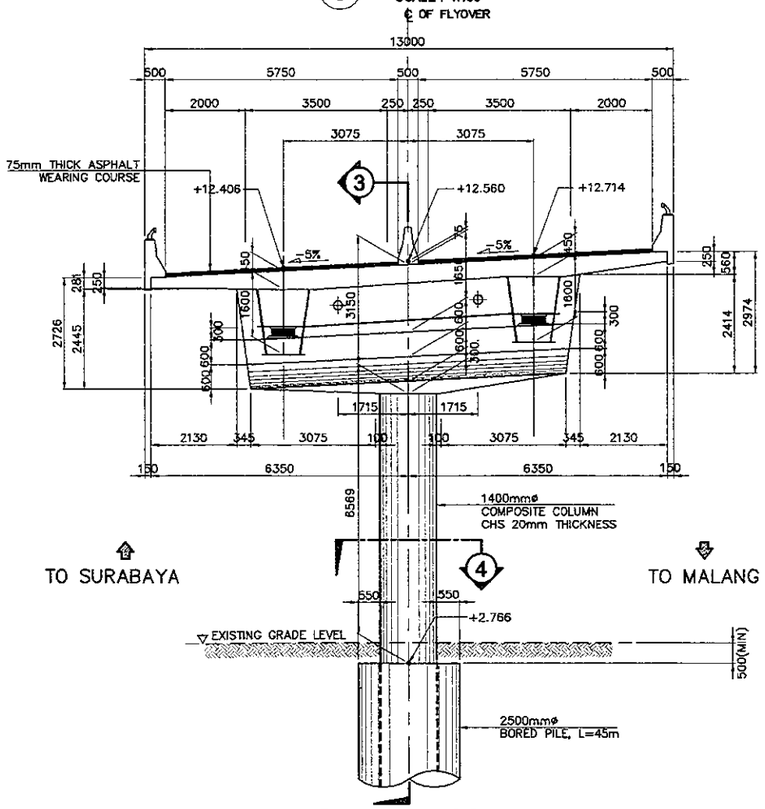

1 ELEVATION
SCALE : 1:150

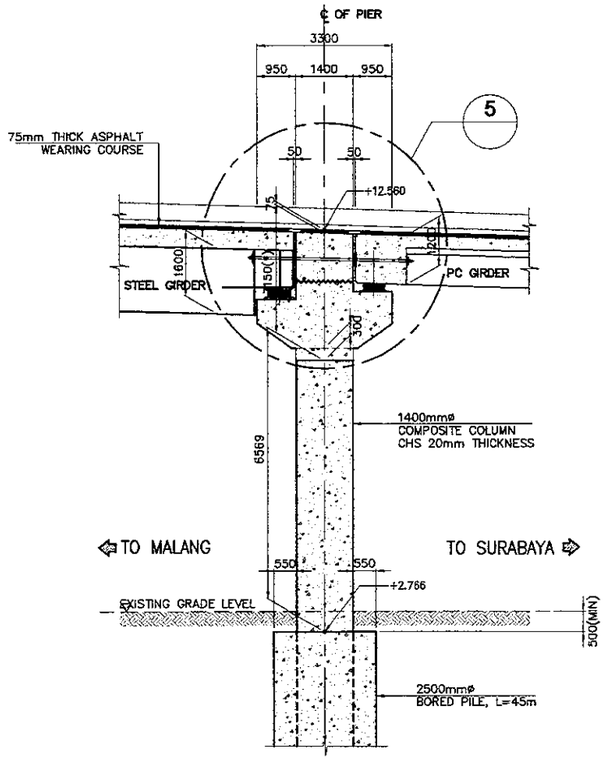

3 SECTION
SCALE : 1:150

(*) NOTES :
1. DIMENSION GIVEN AT ? ALIGNMENT OF FLYOVER
2. DIMENSION VARIES AT CROSS DECK

NOTES :
1. ALL DIMENSIONS ARE IN MILLIMETER
2. ELEVATIONS ARE IN METERS

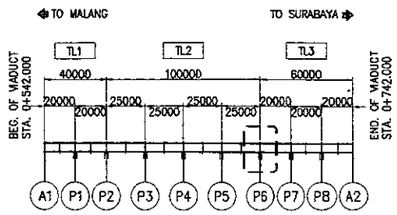

* KEY PLAN
SCALE : 1:4000

PRINTED: OCT. 18, 2006

JAPAN INTERNATIONAL COOPERATION AGENCY KATAHIRA & ENGINEERS INTERNATIONAL	DESIGNED BY	CHECKED BY	SUBMITTED BY	REPUBLIC OF INDONESIA MINISTRY OF PUBLIC WORKS DIRECTORATE GENERAL OF HIGHWAYS	PROJECT AND LOCATION :	SCALE :	DRAWING TITLE :	DRAWING NO :
	Name: A. GOURLEY	Name: T. OKUMURA	Name: M. KIUCHI		DETAILED DESIGN STUDY OF NORTH JAVA CORRIDOR FLYOVER PROJECT TANGGULANGIN FLYOVER - CONTRACT PACKAGE 3 (PETERONGAN - TANGGULANGIN) EAST JAVA PROVINCE	1 : 40 1 : 60 1 : 150 1 : 4000 FULL SIZE A3	PIER LAYOUT P7,P8 (FIXED)	TSB-008
	Sign	Sign	Sign	APPROVED BY: Ir. HERRY VAZA M,Eng.Sc NIP. : 110038400 — Sign				SHEET NO : 08 / 45
	Date	Date	Date	Date				

SCHEDULE OF PIERS (FIXED)																	
PIER	EL. A	EL. AL	EL. AR	EL. BL	EL. BR	SL 1L	SL 1R	SL2	H	HL	HR	H1	H2	H3	H4	H5	H6
P7	11.817	10.658	11.976	2.250	2.250	-5.000%	-5.000%	-5.000	1200	8133	8451	1359	1041	776	723	583	318
P8	10.840	10.730	10.950	0.773	0.773	-3.467%	-3.467%	-5.000	1200	8682	8902	1310	1090	768	731	542	359

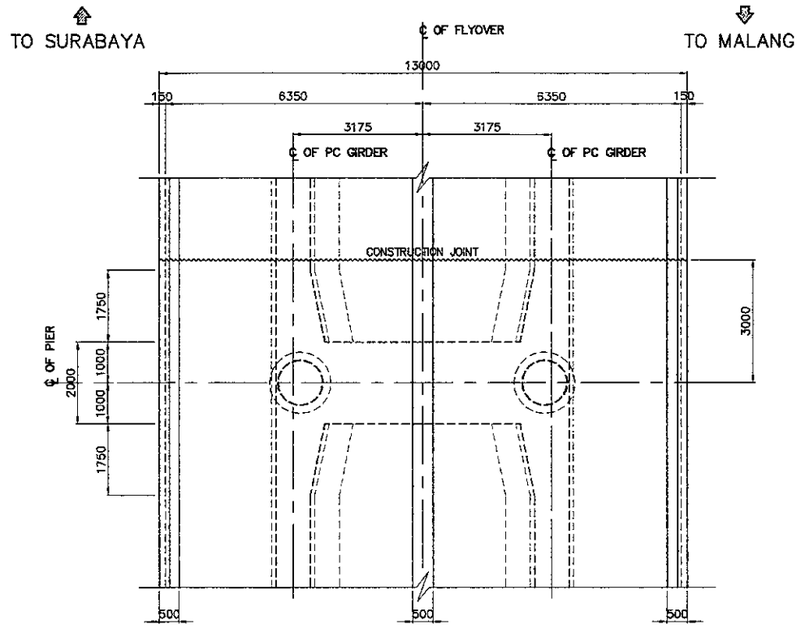

2 PLAN
SCALE : 1:150

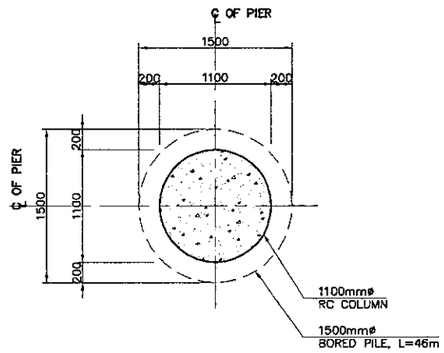

4 SECTION
SCALE : 1:60

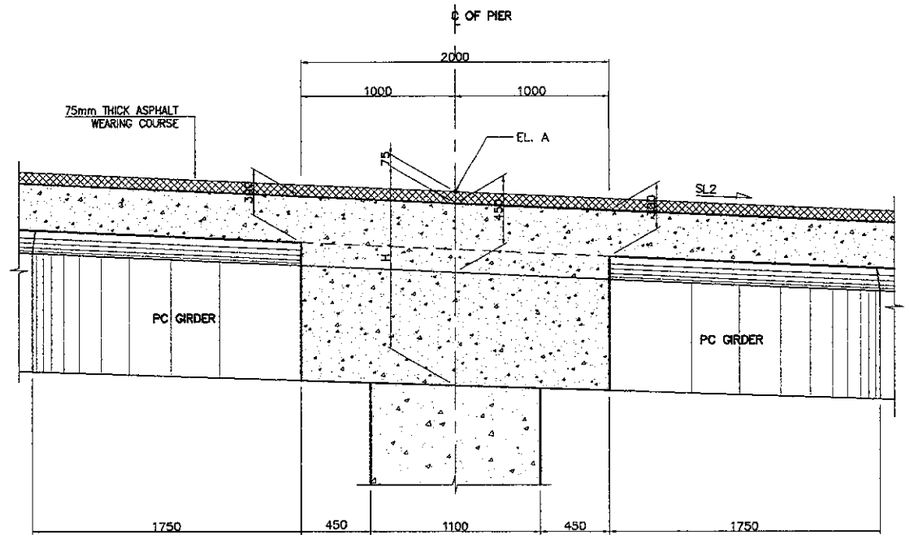

5 DETAIL
SCALE : 1:40

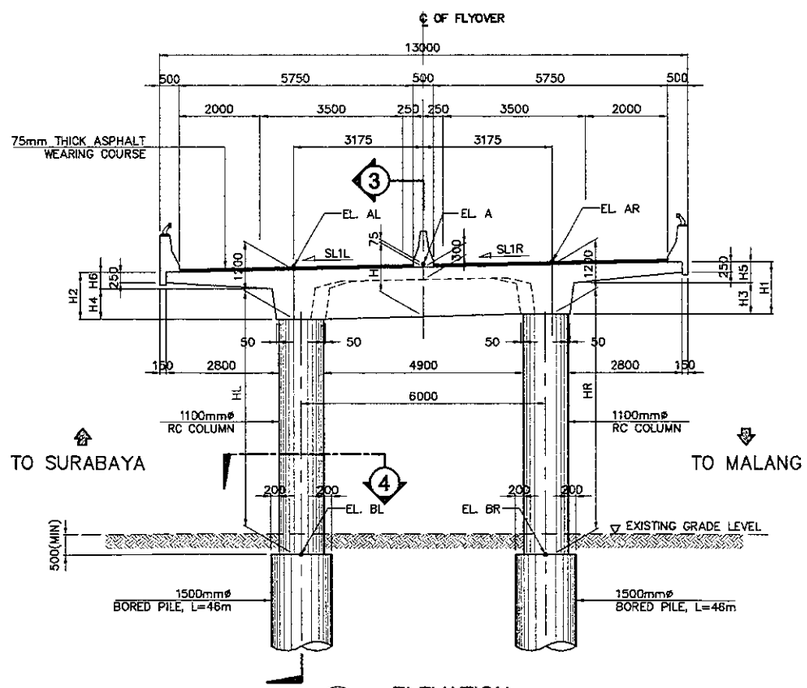

1 ELEVATION
SCALE : 1:150

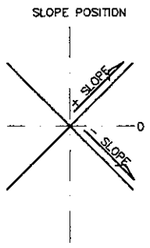

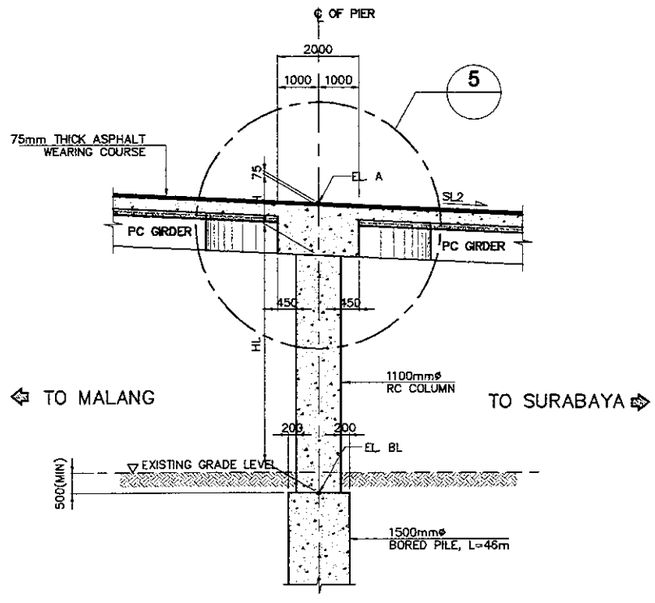

3 SECTION
SCALE : 1:150

NOTES :
1. ALL DIMENSIONS ARE IN MILLIMETER
2. ELEVATIONS ARE IN METERS

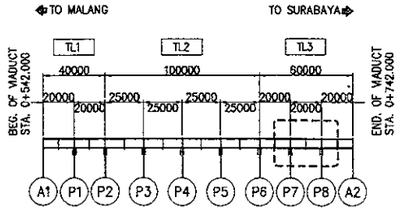

* KEY PLAN
SCALE : 1:4000

PRINTED: OCT. 18, 2006

JAPAN INTERNATIONAL COOPERATION AGENCY / KATAHIRA & ENGINEERS INTERNATIONAL	DESIGNED BY	CHECKED BY	SUBMITTED BY	REPUBLIC OF INDONESIA MINISTRY OF PUBLIC WORKS DIRECTORATE GENERAL OF HIGHWAYS	PROJECT AND LOCATION :	SCALE :	DRAWING TITLE :	DRAWING NO :
	Name: A. GOURLEY	Name: T. OKUMURA	Name: M. KIUCHI		DETAILED DESIGN STUDY OF NORTH JAVA CORRIDOR FLYOVER PROJECT TANGGULANGIN FLYOVER - CONTRACT PACKAGE 3 (PETERONGAN -TANGGULANGIN) EAST JAVA PROVINCE	1 : 4000 1 : 100 1 : 40	**ABUTMENT LAYOUT & DIMENSIONS (ABUT. A2)**	TSB-009
	Sign	Sign	Sign	APPROVED BY: Ir. HERRY VAZA M,Eng.Sc				SHEET NO :
	Date	Date	Date	NIP. : 110038400 / Sign / Date		FULL SIZE A3		09 / 45

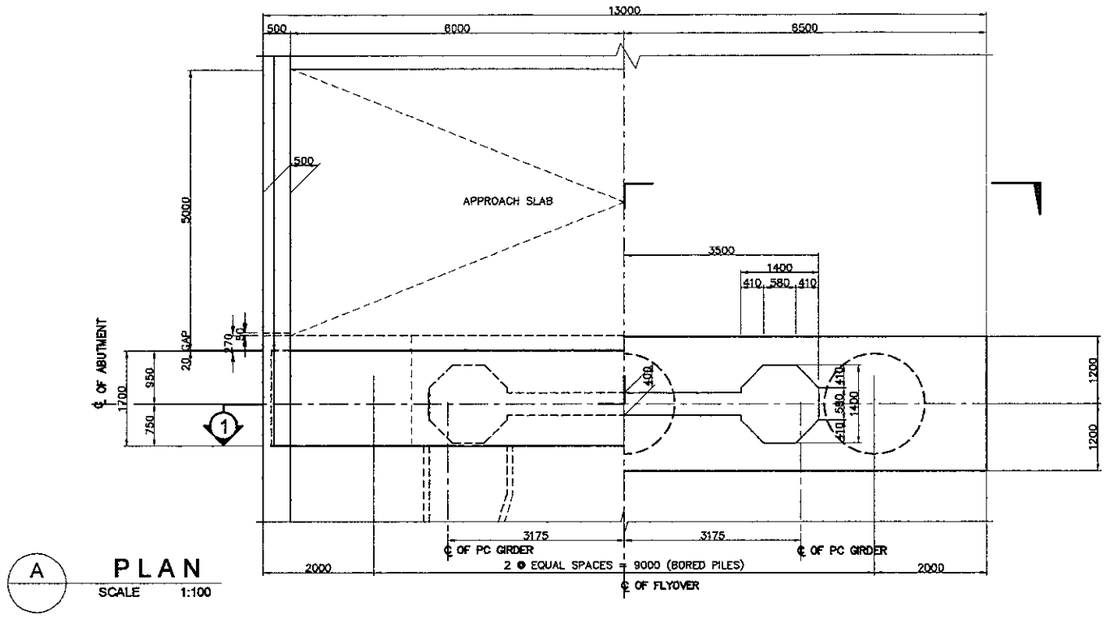

A PLAN
SCALE 1:100

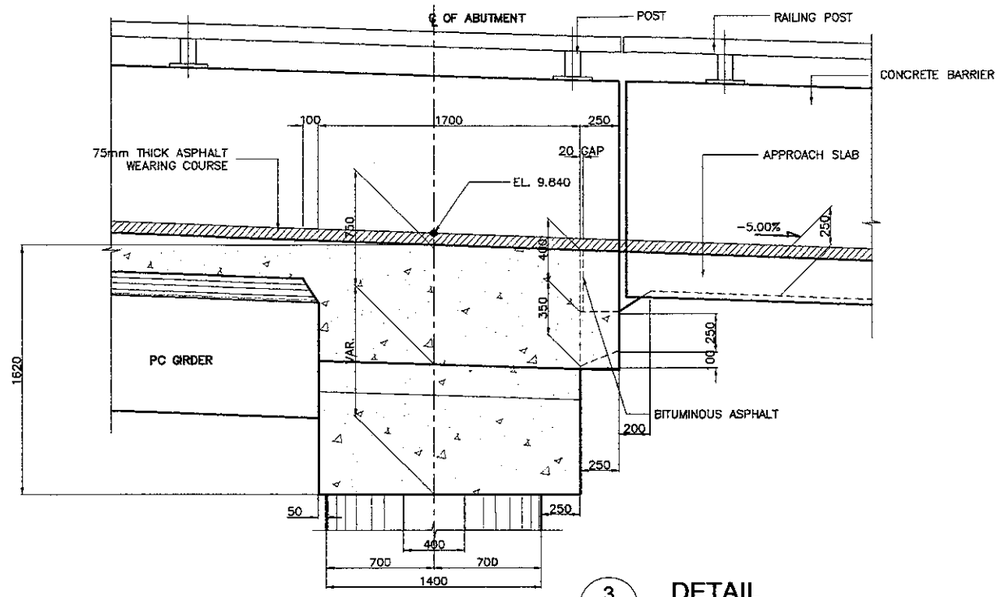

3 DETAIL
SCALE 1:40

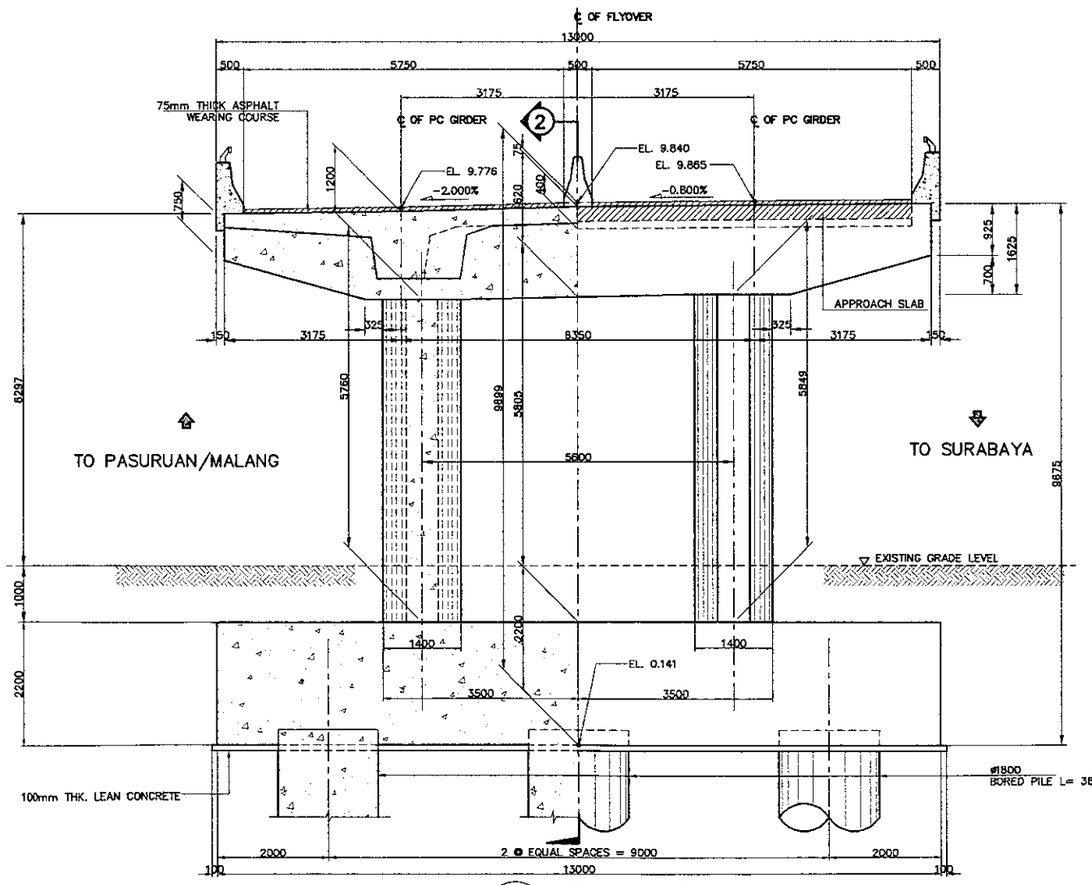

1 ELEVATION
SCALE 1:100

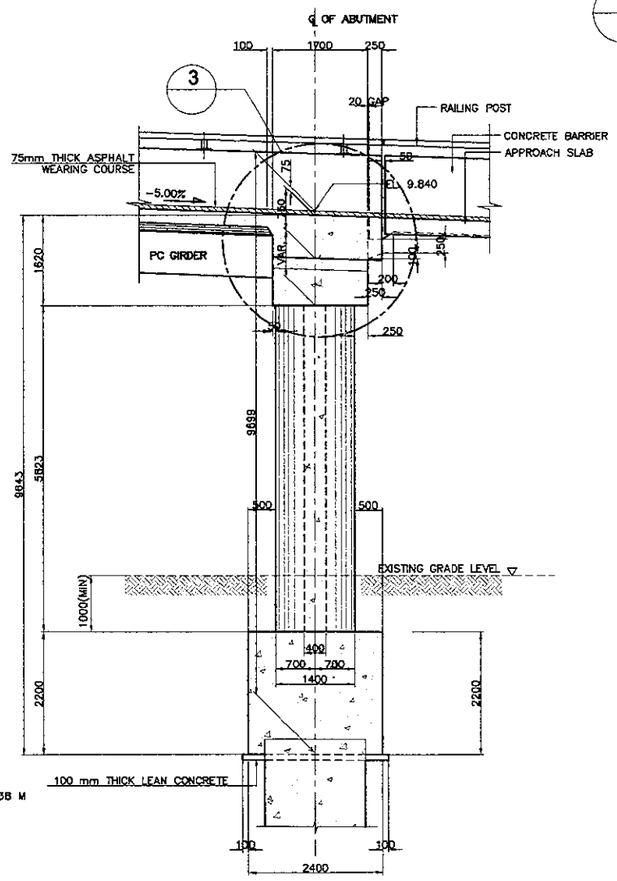

2 SECTION
SCALE 1:100

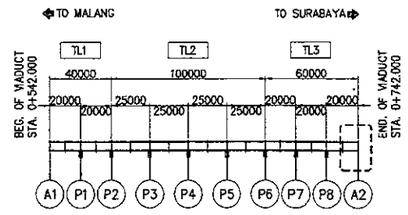

KEY PLAN
SCALE 1:4000

NOTES :
1. ALL DIMENSIONS ARE IN MILLIMETER
2. ELEVATIONS ARE IN METERS

PRINTED: OCT. 18, 2006

JICA JAPAN INTERNATIONAL COOPERATION AGENCY / KATAHIRA & ENGINEERS INTERNATIONAL	DESIGNED BY	CHECKED BY	SUBMITTED BY	REPUBLIC OF INDONESIA MINISTRY OF PUBLIC WORKS DIRECTORATE GENERAL OF HIGHWAYS	PROJECT AND LOCATION :	SCALE :	DRAWING TITLE :	DRAWING NO :
	Name: A. GOURLEY	Name: T. OKUMURA	Name: M. KIUCHI		DETAILED DESIGN STUDY OF NORTH JAVA CORRIDOR FLYOVER PROJECT TANGGULANGIN FLYOVER - CONTRACT PACKAGE 3 (PETERONGAN -TANGGULANGIN) EAST JAVA PROVINCE	1 : 100 1 : 40	REINFORCEMENT COLUMN OF ABUTMENT A1 (1 OF 2)	TSB-010
	Sign	Sign	Sign	APPROVED BY: Ir. HERRY VAZA M,Eng.Sc				SHEET NO :
	Date	Date	Date	NIP. : 110038400 / Sign / Date		FULL SIZE A3		10 / 45

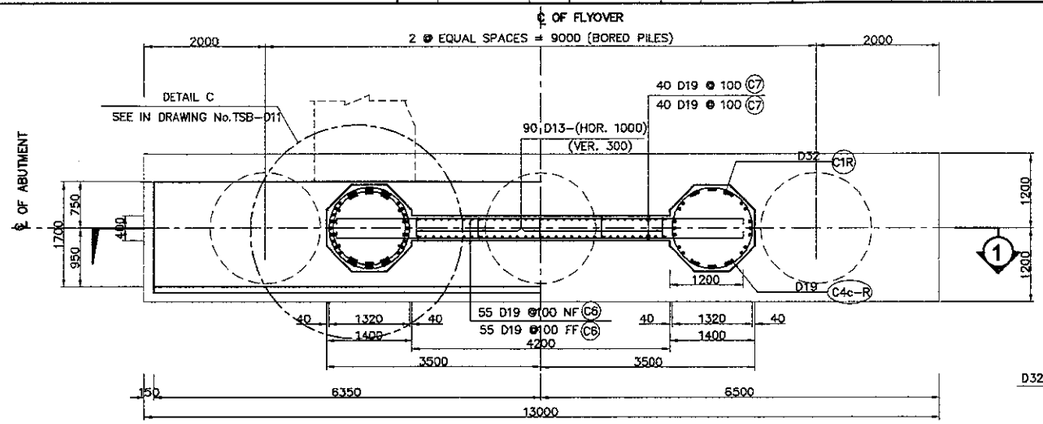

2 PLAN
SCALE 1:100

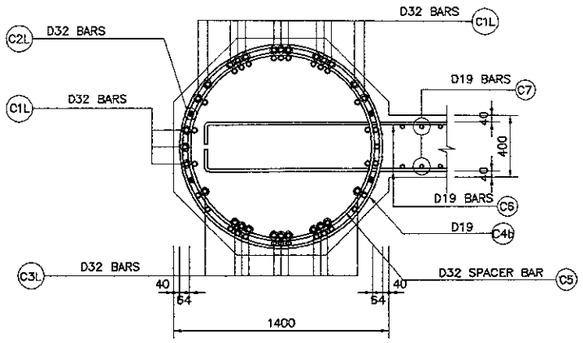

4 SECTION
SCALE 1:40

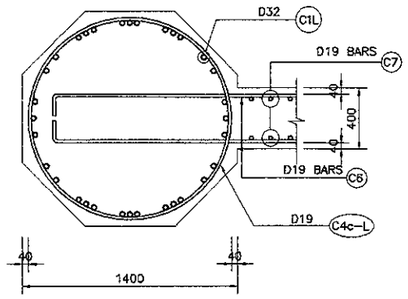

5 SECTION
SCALE 1:40

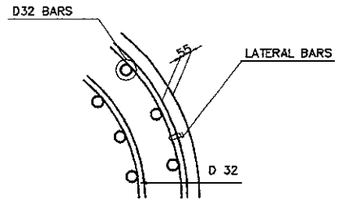

B TYPICAL BAR LAYOUT DETAIL
NOT TO SCALE

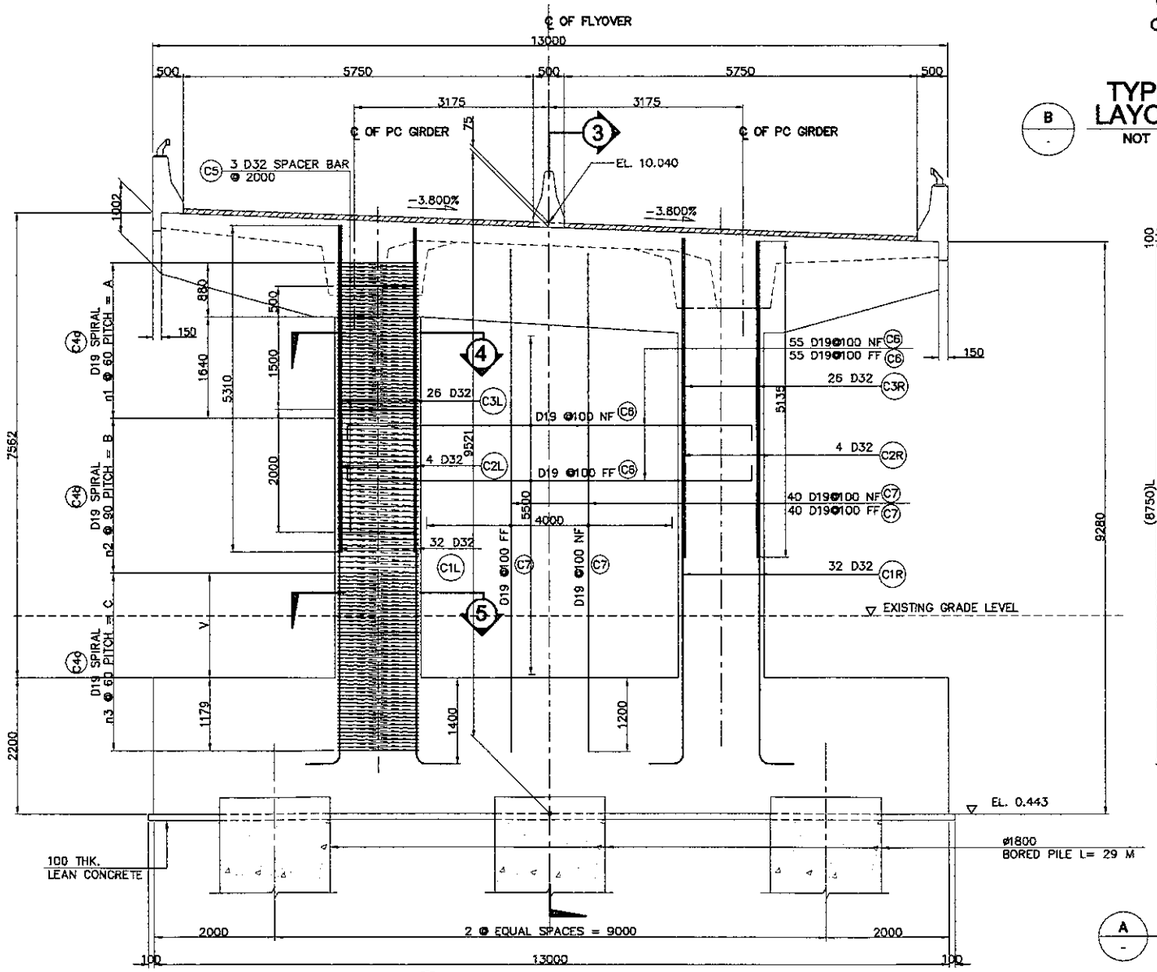

1 ELEVATION
SCALE 1:100

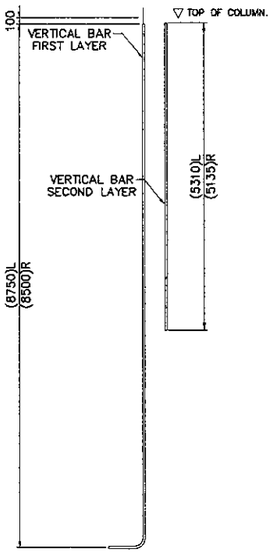

A SCHEMATIC DETAIL
NOT TO SCALE

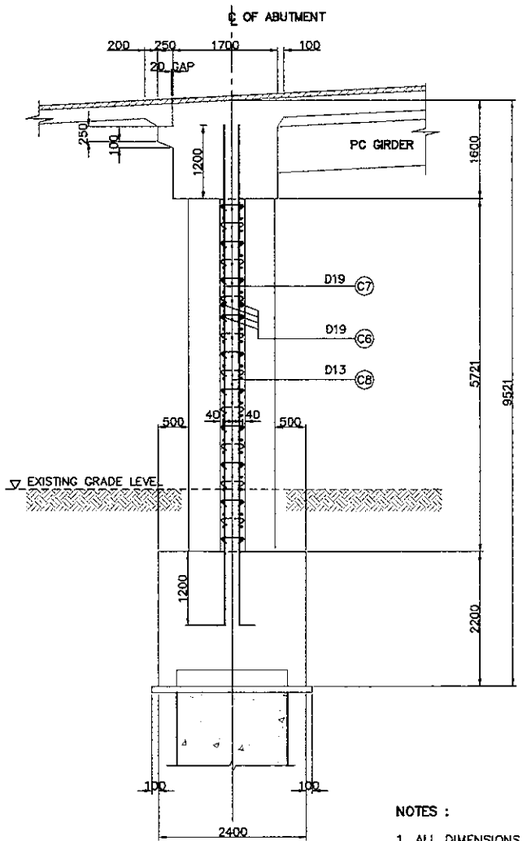

3 ELEVATION
SCALE 1:100

NOTES :

1. ALL DIMENSIONS ARE IN MILLIMETERS
2. ELEVATION ARE IN METERS
3. CONCRETE ABUTMENT AND FOOTING fc' = 30 MPa
4. REINFORCING STEEL : YIELD STRENGTH = 390 N/mm2

PRINTED: OCT. 18, 2006

JAPAN INTERNATIONAL COOPERATION AGENCY / KATAHIRA & ENGINEERS INTERNATIONAL	DESIGNED BY	CHECKED BY	SUBMITTED BY	REPUBLIC OF INDONESIA MINISTRY OF PUBLIC WORKS DIRECTORATE GENERAL OF HIGHWAYS	PROJECT AND LOCATION :	SCALE :	DRAWING TITLE :	DRAWING NO :
	Name: A. GOURLEY	Name: T. OKUMURA	Name: M. KIUCHI		DETAILED DESIGN STUDY OF NORTH JAVA CORRIDOR FLYOVER PROJECT TANGGULANGIN FLYOVER - CONTRACT PACKAGE 3 (PETERONGAN -TANGGULANGIN) EAST JAVA PROVINCE	1 : 20 FULL SIZE A3	**REINFORCEMENT COLUMN OF ABUTMENT A1** **(2 OF 2)**	TSB-011 SHEET NO : 11 / 45
	Sign	Sign	Sign	APPROVED BY: Ir. HERRY VAZA M.Eng.Sc NIP. : 110038400				
	Date	Date	Date	Sign / Date				

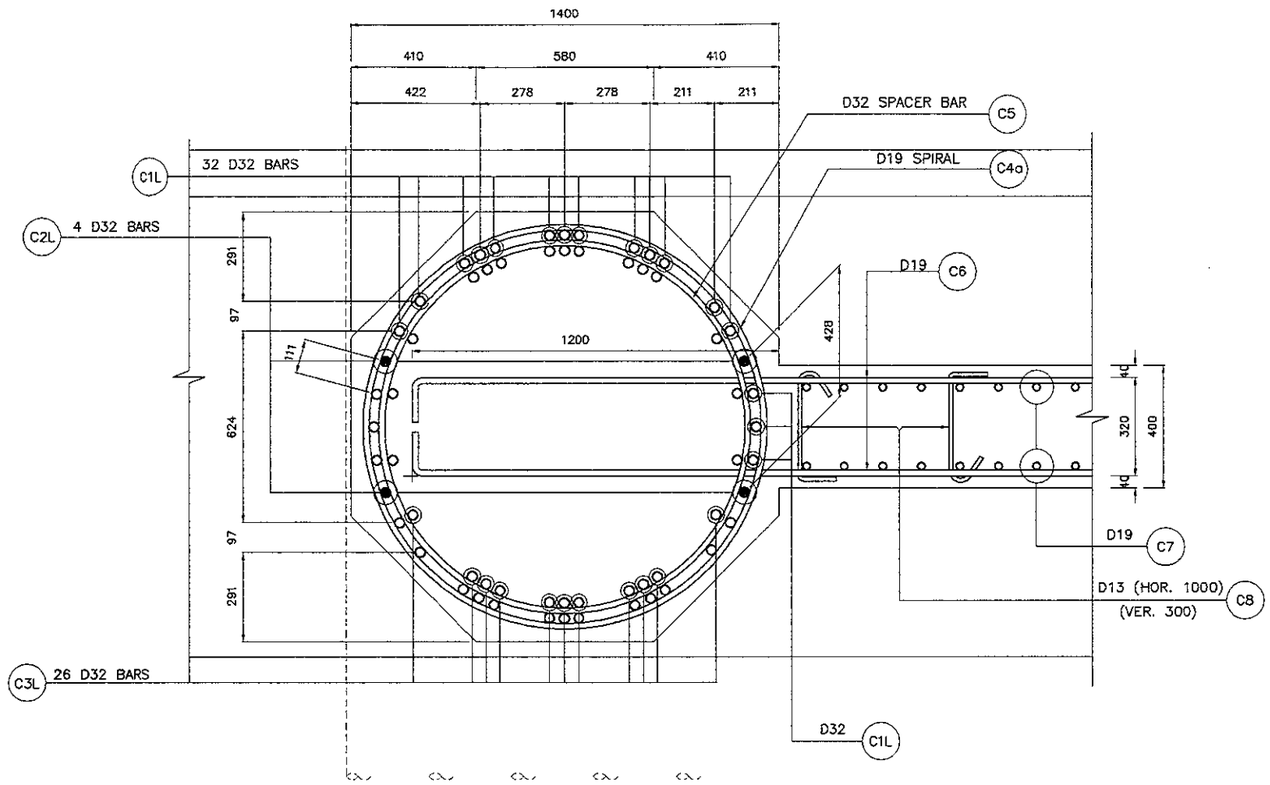

C DETAIL
SCALE 1:20

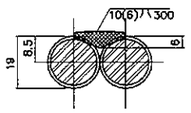

D1 SECTION
NOT TO SCALE

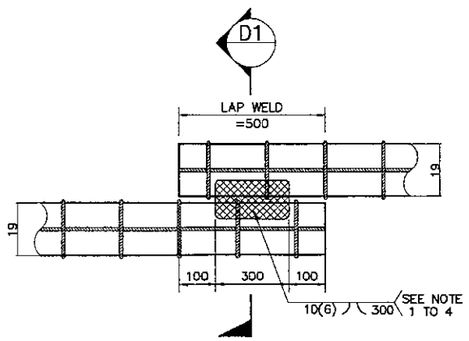

DIRECT LAP JOINT WITH BARS IN CONTACT

D DETAIL OF SPIRAL REINF. FULL LAP-WELD CONNECTION
NOT TO SCALE

NOTES ON LAP–WELD CONNECTION :

1. SPIRAL REINFORCEMENT ARE LAP–WELD CONNECTED (FLARED–V–GROOVE TYPE)
2. WELDING SHOULD CONFORM TO AWS (D1.4) *STRUCTURAL WELDING CODE REINFORCED STEEL.*
3. USE ELECTRODE E90XX.
4. CARE SHOULD BE TAKEN NOT TO DAMAGE THE COLUMN MAIN BARS DURING WELDING.

NOTES :

1. ALL DIMENSIONS ARE IN MILLIMETERS
2. ELEVATION ARE IN METERS
3. CONCRETE ABUTMENT AND FOOTING fc' = 30 MPa
4. REINFORCING STEEL : YIELD STRENGTH = 390 N/mm2

BAR BENDING DIAGRAM

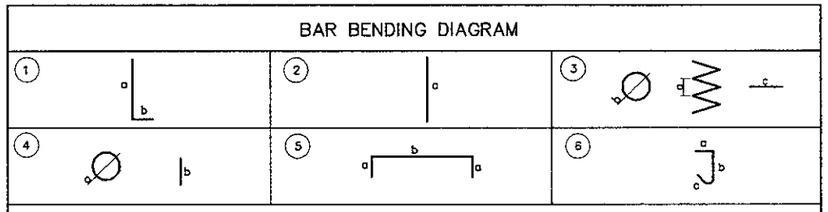

SCHEDULE OF REINFORCEMENT

LOCATION	BAR MARK	SIZE (mm)	BEND TYPE	DIMENSION (mm) OUT TO OUT a	b	c	d	e	f	LENGTH (mm)	NO. REQ'D.	UNIT WEIGHT (kg/m.)	WEIGHT (kg.)	VOLUME OF CONC. (m³)
ABUTMENT (A1)	COLUMN													
	C1L	32	1	7870	550					8420	32	6.31	1700	8.993
	C2L	32	1	5310						5310	4	6.31	134	
	C3L	32	2	5310						5310	26	6.31	871	
	C4a–L	19	3	60	1320	500				181427	1	2.23	405	
	C4b–L	19	3	90	1320	500				120951	1	2.23	254	
	C4c–L	19	3	60	1320	500				207345	1	2.23	462	
	C5	32	4	1218	500					4232	3	6.31	80	
										SUB TOTAL = 3,922 kg.				
	C1R	32	1	7820	550					8370	32	6.31	1690	6.683
	C2R	32	1	5140						5140	4	6.31	130	
	C3R	32	2	5140						5140	26	6.31	843	
	C4a–R	19	3	60	1320	500				181427	1	2.23	405	
	C4b–R	19	3	90	1320	500				107992	1	2.23	241	
	C4c–R	19	3	60	1320	500				207345	1	2.23	462	
	C5	32	4	1218	500					4232	3	6.31	80	
										SUB TOTAL = 3,851 kg.				
										TOTAL WEIGHT ABUTMENT A1 (A) = 7,773 kg.				13.676
	WALL													
	C6	19	5	300	6600					7200	110	2.23	1766	8.800
	C7	19	1	7900	500					8400	80	2.23	1498	
	C8	13	6	110	320	160				590	83	1.04	51	
										TOTAL (B) WALL = 3,315 kg.				
										TOTAL WEIGHT (A + B) = 11,088 kg.				22.476

THE REINFORCEMENT SHOWN ON THIS TABLE IS FOR REFERENCE ONLY, THE CONTRACTOR SHOULD CHECKED AND VERIFY ALL DIMENSIONS, SIZES AND QUANTITIES OF REINFORCEMENT.

SCHEDULE OF COLUMN

No. OF COLUMN	HEIGHT (mm)	A (mm)	B (mm)	C (mm)	V (mm)	n1	n2	n3
A1 (L)	5861	2520	2520	2880	1701	42	28	48
A1 (R)	5601	2520	2250	2880	1711	42	26	48

JAPAN INTERNATIONAL COOPERATION AGENCY KATAHIRA & ENGINEERS INTERNATIONAL	DESIGNED BY	CHECKED BY	SUBMITTED BY	REPUBLIC OF INDONESIA MINISTRY OF PUBLIC WORKS DIRECTORATE GENERAL OF HIGHWAYS	PROJECT AND LOCATION :	SCALE :	DRAWING TITLE :	DRAWING NO :
	Name A. GOURLEY	Name T. OKUMURA	Name M. KIUCHI		DETAILED DESIGN STUDY OF NORTH JAVA CORRIDOR FLYOVER PROJECT TANGGULANGIN FLYOVER - CONTRACT PACKAGE 3 (PETERONGAN -TANGGULANGIN) EAST JAVA PROVINCE	1 : 100 1 : 40	REINFORCEMENT COLUMN OF ABUTMENT A2 (1 OF 2)	TSB-012
	Sign	Sign	Sign					SHEET NO :
	Date	Date	Date	APPROVED BY Ir. HERRY VAZA M,Eng.Sc NIP. : 110038400 Sign Date		FULL SIZE A3		12/ 45

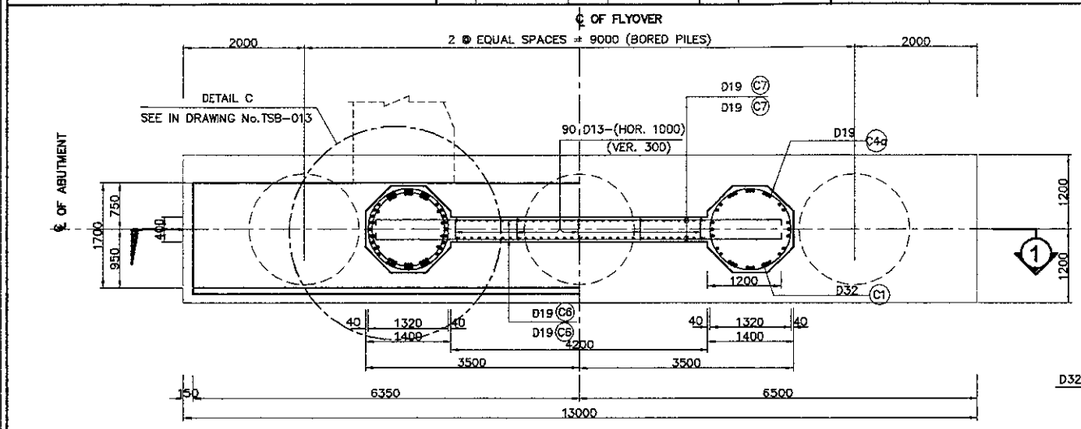

2 PLAN
SCALE 1:100

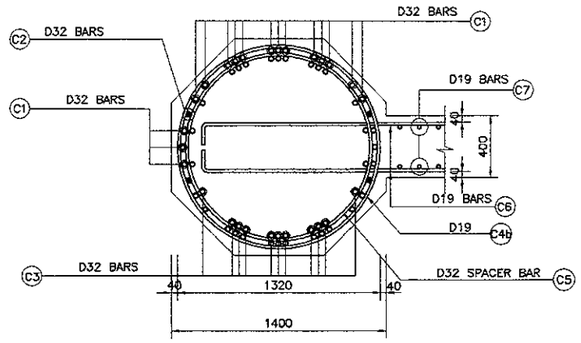

4 SECTION
SCALE 1:40

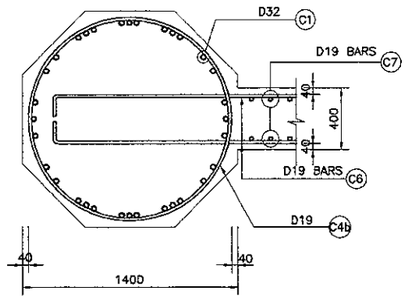

5 SECTION
SCALE 1:40

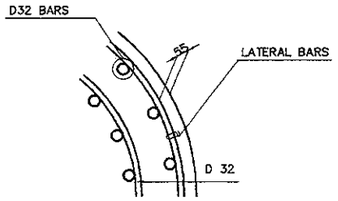

B TYPICAL BAR LAYOUT DETAIL
NOT TO SCALE

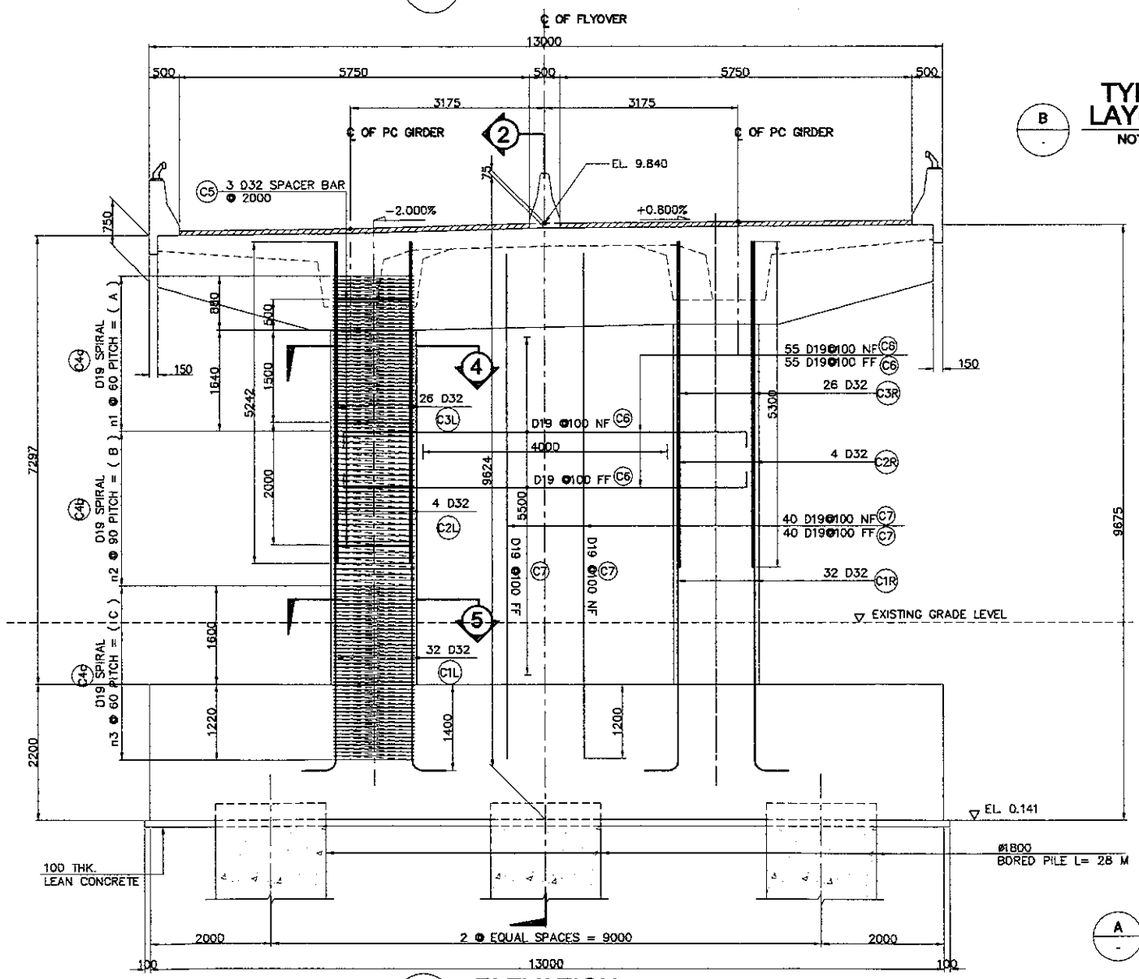

1 ELEVATION
SCALE 1:100

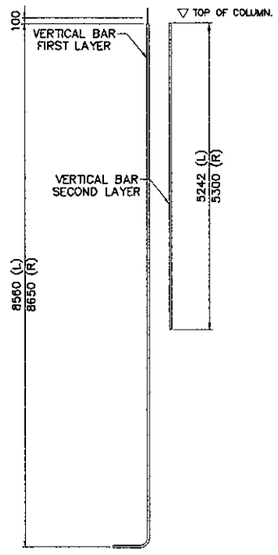

A SCHEMATIC DETAIL
NOT TO SCALE

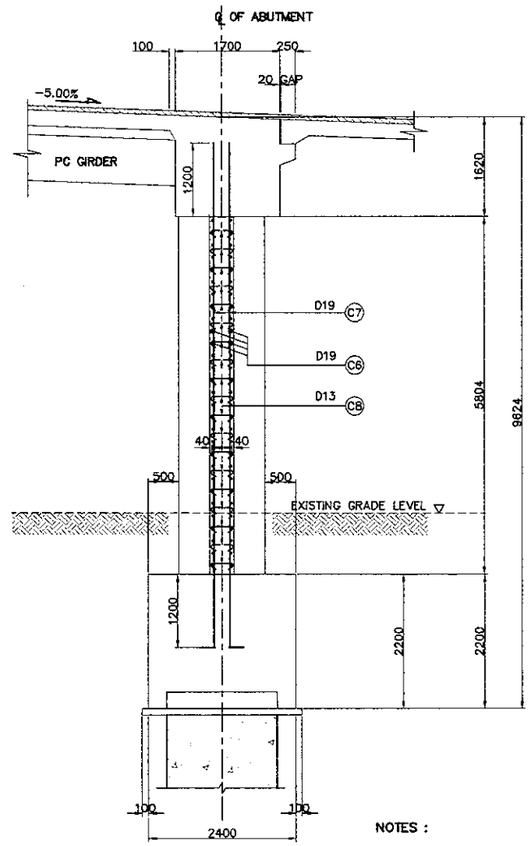

3 ELEVATION
SCALE 1:100

NOTES :

1. ALL DIMENSIONS ARE IN MILLIMETERS
2. ELEVATION ARE IN METERS
3. CONCRETE ABUTMENT AND FOOTING fc' = 30 MPa
4. REINFORCING STEEL : YIELD STRENGTH = 390 N/mm2

PRINTED: OCT. 18, 2006

JAPAN INTERNATIONAL COOPERATION AGENCY KATAHIRA & ENGINEERS INTERNATIONAL	DESIGNED BY	CHECKED BY	SUBMITTED BY	REPUBLIC OF INDONESIA MINISTRY OF PUBLIC WORKS DIRECTORATE GENERAL OF HIGHWAYS	PROJECT AND LOCATION :	SCALE :	DRAWING TITLE :	DRAWING NO :
	Name A. GOURLEY	Name T. OKUMURA	Name M. KIUCHI		DETAILED DESIGN STUDY OF NORTH JAVA CORRIDOR FLYOVER PROJECT TANGGULANGIN FLYOVER - CONTRACT PACKAGE 3 (PETERONGAN -TANGGULANGIN) EAST JAVA PROVINCE	1 : 20	REINFORCEMENT COLUMN OF ABUTMENT A2 (2 OF 2)	TSB-013
	Sign	Sign	Sign	APPROVED BY Ir. HERRY VAZA M,Eng.Sc NIP. : 110038400				SHEET NO :
	Date	Date	Date	Sign / Date		FULL SIZE A3		13 / 45

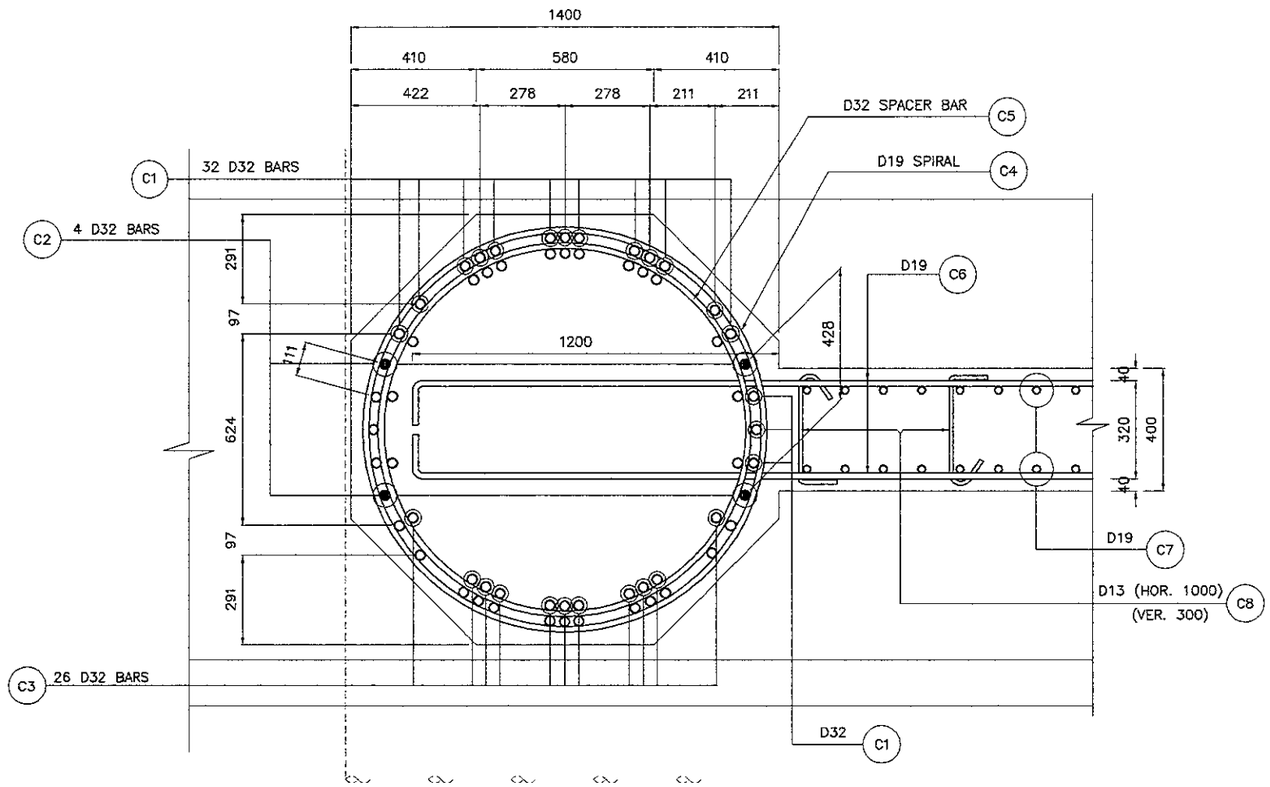

C DETAIL
SCALE 1:20

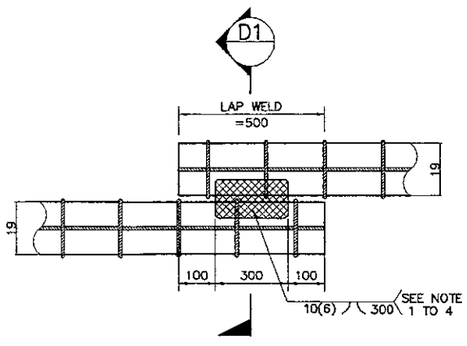

DIRECT LAP JOINT WITH BARS IN CONTACT

D DETAIL OF SPIRAL REINF. FULL LAP-WELD CONNECTION
NOT TO SCALE

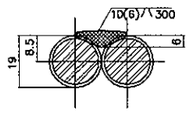

D1 SECTION
NOT TO SCALE

NOTES ON LAP-WELD CONNECTION :

1. SPIRAL REINFORCEMENT ARE LAP-WELD CONNECTED (FLARED-V-GROOVE TYPE)
2. WELDING SHOULD CONFORM TO AWS (D1.4) *STRUCTURAL WELDING CODE REINFORCED STEEL.*
3. USE ELECTRODE E90XX.
4. CARE SHOULD BE TAKEN NOT TO DAMAGE THE COLUMN MAIN BARS DURING WELDING.

NOTES :

1. ALL DIMENSIONS ARE IN MILLIMETERS
2. ELEVATION ARE IN METERS
3. CONCRETE ABUTMENT AND FOOTING fc' = 30 MPa
4. REINFORCING STEEL : YIELD STRENGTH = 390 N/mm2

BAR BENDING DIAGRAM

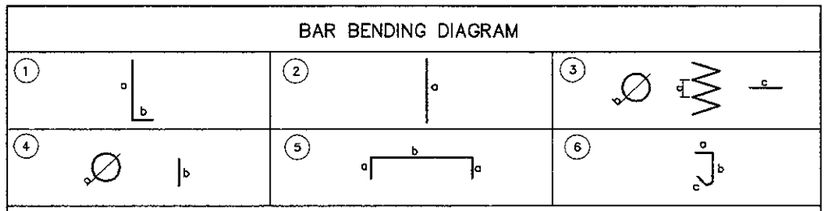

SCHEDULE OF REINFORCEMENT

LOCATION	BAR MARK	SIZE (mm)	BEND TYPE	DIMENSION (mm) OUT TO OUT a	b	c	d	e	f	LENGTH (mm)	NO. REQ'D.	UNIT WEIGHT (kg/m.)	WEIGHT (kg.)	VOLUME OF CONC. (M³)
ABUTMENT (A2)	COLUMN													
	C1L	32	1	8550	550					9110	32	6.31	1839	6.873
	C2L	32	1	5242						5242	4	6.31	132	
	C3L	32	2	5242						5242	26	6.31	860	
	C4a-L	19	3	60	1320	500				185825	1	2.23	414	
	C4b-L	19	3	90	1320	500				121000	1	2.23	270	
	C4c-L	19	3	60	1320	500				203107	1	2.23	453	
	C5	32	4	1218	500					4232	3	6.31	80	
										SUB TOTAL = 4,048 kg.				
	C1R	32	1	8650	550					9200	32	6.31	1858	6.980
	C2R	32	1	5300						5300	4	6.31	134	
	C3R	32	2	5300						5300	26	6.31	843	
	C4a-R	19	3	60	1320	500				185821	1	2.23	414	
	C4b-R	19	3	90	1320	500				121000	1	2.23	279	
	C4c-R	19	3	60	1320	500				203107	1	2.23	453	
	C5	32	4	1218	500					4232	3	6.31	80	
										SUB TOTAL = 4,081 kg.				
										TOTAL WEIGHT ABUTMENT A1 (A) = 8,109 kg.				13.853
	WALL													
	C6	19	5	300	6600					7200	112	2.23	1798	8.800
	C7	19	1	8085	500					8704	82	2.23	1592	
	C8	13	6	110	320	160				590	102	1.04	53	
										TOTAL (B) WALL = 3.443 kg.				
										TOTAL WEIGHT (A + B) = 11,552 kg.				22.653

THE REINFORCEMENT SHOWN ON THIS TABLE IS FOR REFERENCE ONLY, THE CONTRACTOR SHOULD CHECKED AND VERIFY ALL DIMENSIONS, SIZES AND QUANTITIES OF REINFORCEMENT.

SCHEDULE OF COLUMN

No. OF COLUMN	HEIGHT (mm)	A (mm)	B (mm)	C (mm)	V (mm)	n1	n2	n3
A2 (L)	5760	2520	2520	2820	1600	43	28	47
A2 (R)	5850	2520	2610	2820	1600	43	29	47

JAPAN INTERNATIONAL COOPERATION AGENCY KATAHIRA & ENGINEERS INTERNATIONAL	DESIGNED BY	CHECKED BY	SUBMITTED BY	REPUBLIC OF INDONESIA MINISTRY OF PUBLIC WORKS DIRECTORATE GENERAL OF HIGHWAYS	PROJECT AND LOCATION :	SCALE :	DRAWING TITLE :	DRAWING NO :
	Name: A. GOURLEY	Name: T. OKUMURA	Name: M. KIUCHI		DETAILED DESIGN STUDY OF NORTH JAVA CORRIDOR FLYOVER PROJECT TANGGULANGIN FLYOVER - CONTRACT PACKAGE 3 (PETERONGAN -TANGGULANGIN) EAST JAVA PROVINCE	1 : 100 1 : 40 FULL SIZE A3	REINFORCEMENT OF FOOTING ABUTMENT A1 & A2 (1 OF 2)	TSB-014
	Sign	Sign	Sign	APPROVED BY: Ir. HERRY VAZA M,Eng.Sc NIP. : 110038400				SHEET NO :
	Date	Date	Date	Sign / Date				14 / 45

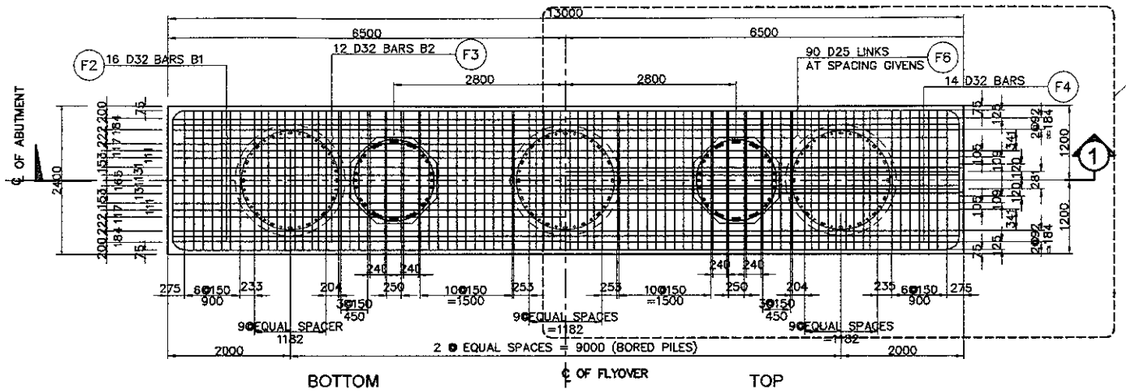

DETAIL A
SEE DRAWING NO. PSB-15

2 PLAN
SCALE 1:100

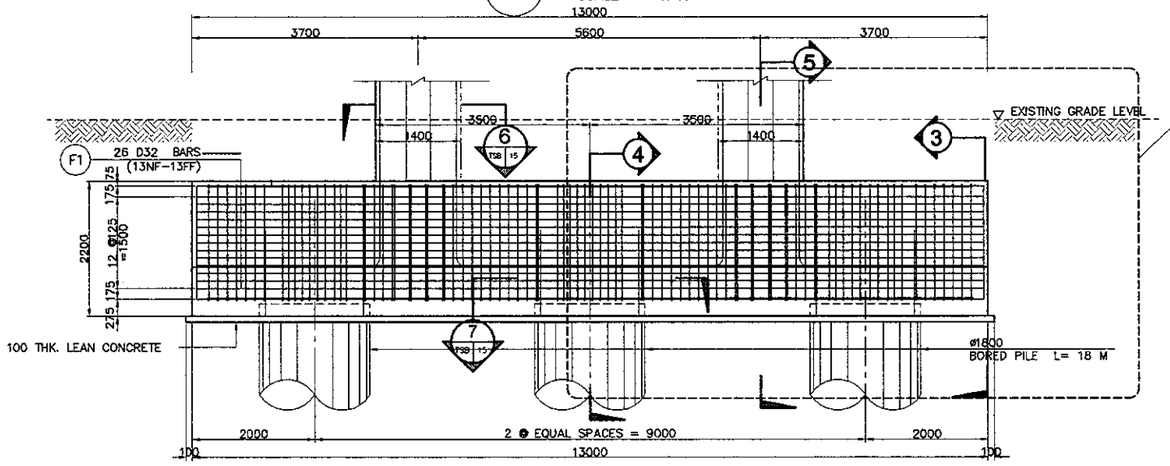

DETAIL B
SEE DRAWING NO. PSB-15

1 ELEVATION
SCALE 1:100

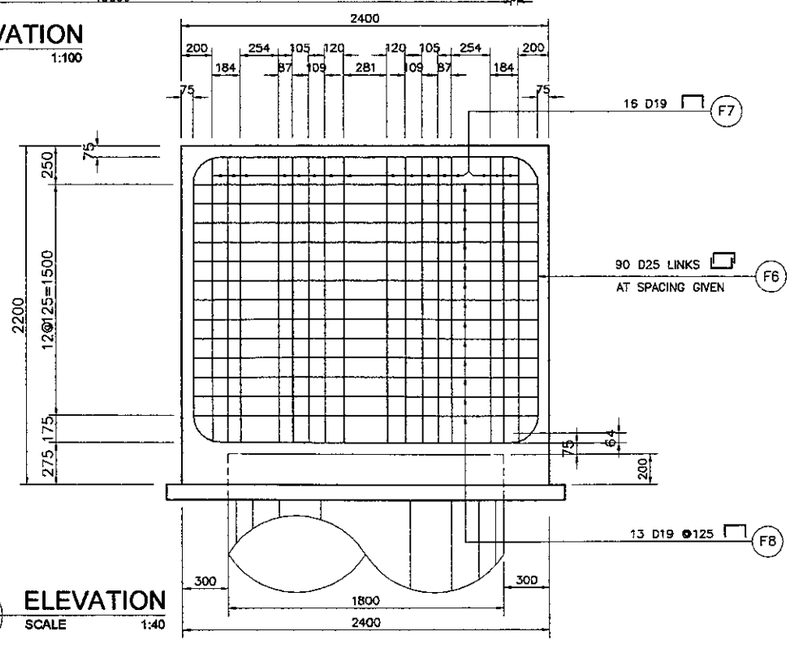

3 ELEVATION
SCALE 1:40

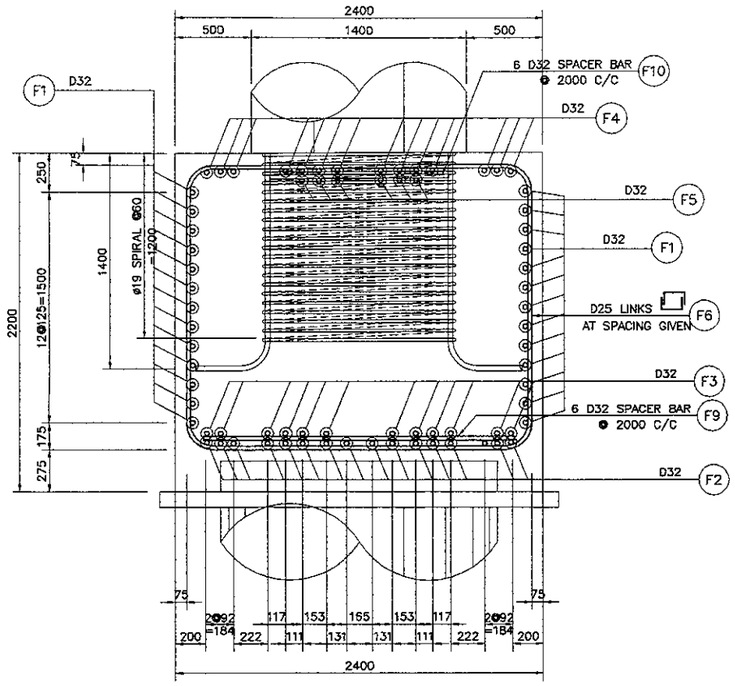

5 SECTION
SCALE 1:40

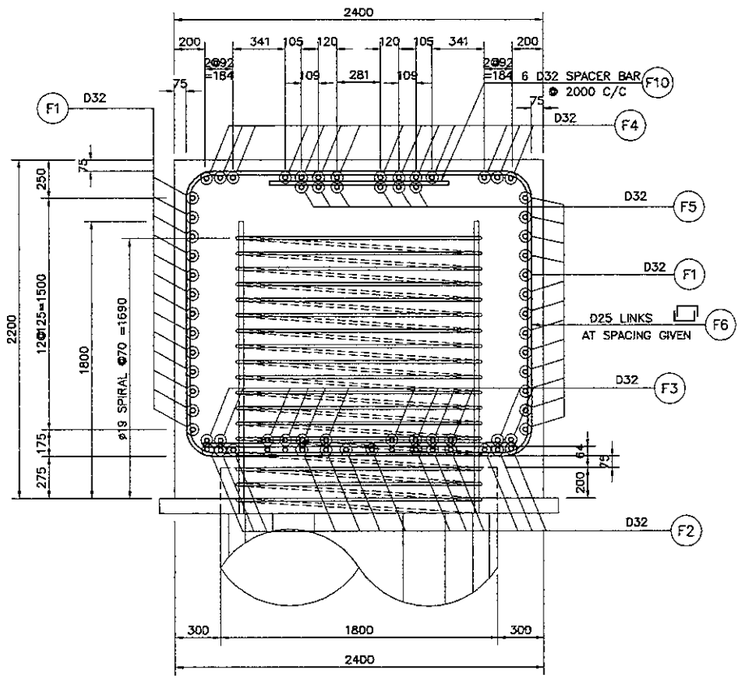

4 SECTION
SCALE 1:40

NOTES :

1. ALL DIMENSIONS ARE IN MILLIMETERS
2. ELEVATION ARE IN METERS
3. CONCRETE ABUTMENT AND FOOTING fc' = 30 MPa
4. REINFORCING STEEL : YIELD STRENGTH = 390 N/mm2

PRINTED: OCT. 18, 2006

JAPAN INTERNATIONAL COOPERATION AGENCY KATAHIRA & ENGINEERS INTERNATIONAL	DESIGNED BY	CHECKED BY	SUBMITTED BY	REPUBLIC OF INDONESIA MINISTRY OF PUBLIC WORKS DIRECTORATE GENERAL OF HIGHWAYS	PROJECT AND LOCATION :	SCALE :	DRAWING TITLE :	DRAWING NO :
	Name: A. GOURLEY	Name: T. OKUMURA	Name: M. KIUCHI		DETAILED DESIGN STUDY OF NORTH JAVA CORRIDOR FLYOVER PROJECT TANGGULANGIN FLYOVER - CONTRACT PACKAGE 3 (PETERONGAN -TANGGULANGIN) EAST JAVA PROVINCE	1 : 25 1 : 20 FULL SIZE A3	REINFORCEMENT OF FOOTING ABUTMENT A1 & A2 (2 OF 2)	TSB-015
	Sign	Sign	Sign	APPROVED BY: Ir. HERRY VAZA M,Eng.Sc NIP. : 110038400				SHEET NO : 15 / 45
	Date	Date	Date	Sign / Date				

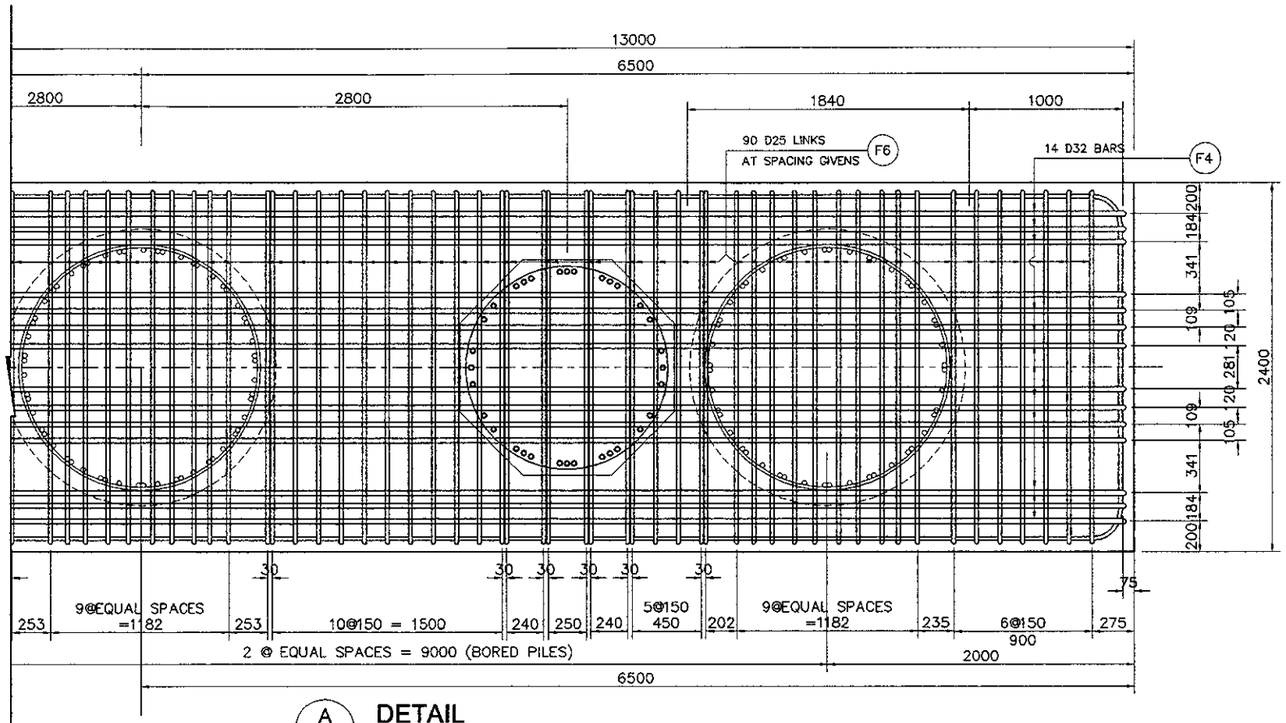

A DETAIL
SCALE 1:40

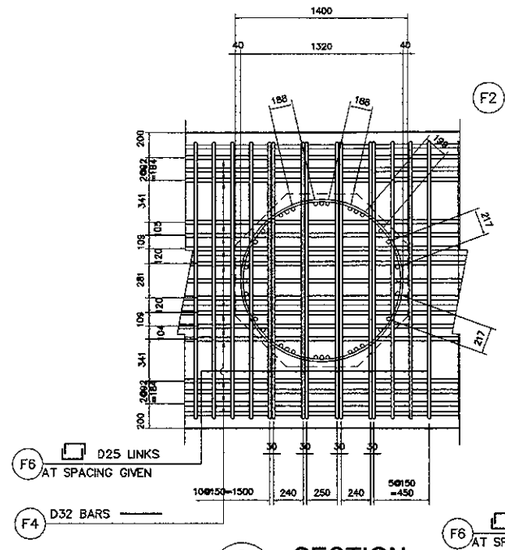

6 SECTION
1 | 14
SCALE 1:50

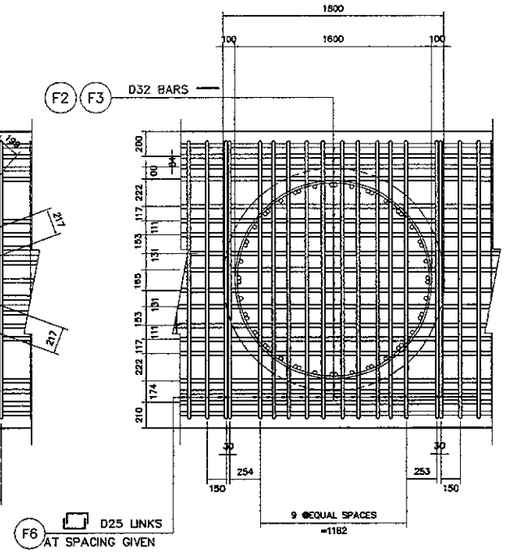

7 SECTION
1 | 14
SCALE 1:50

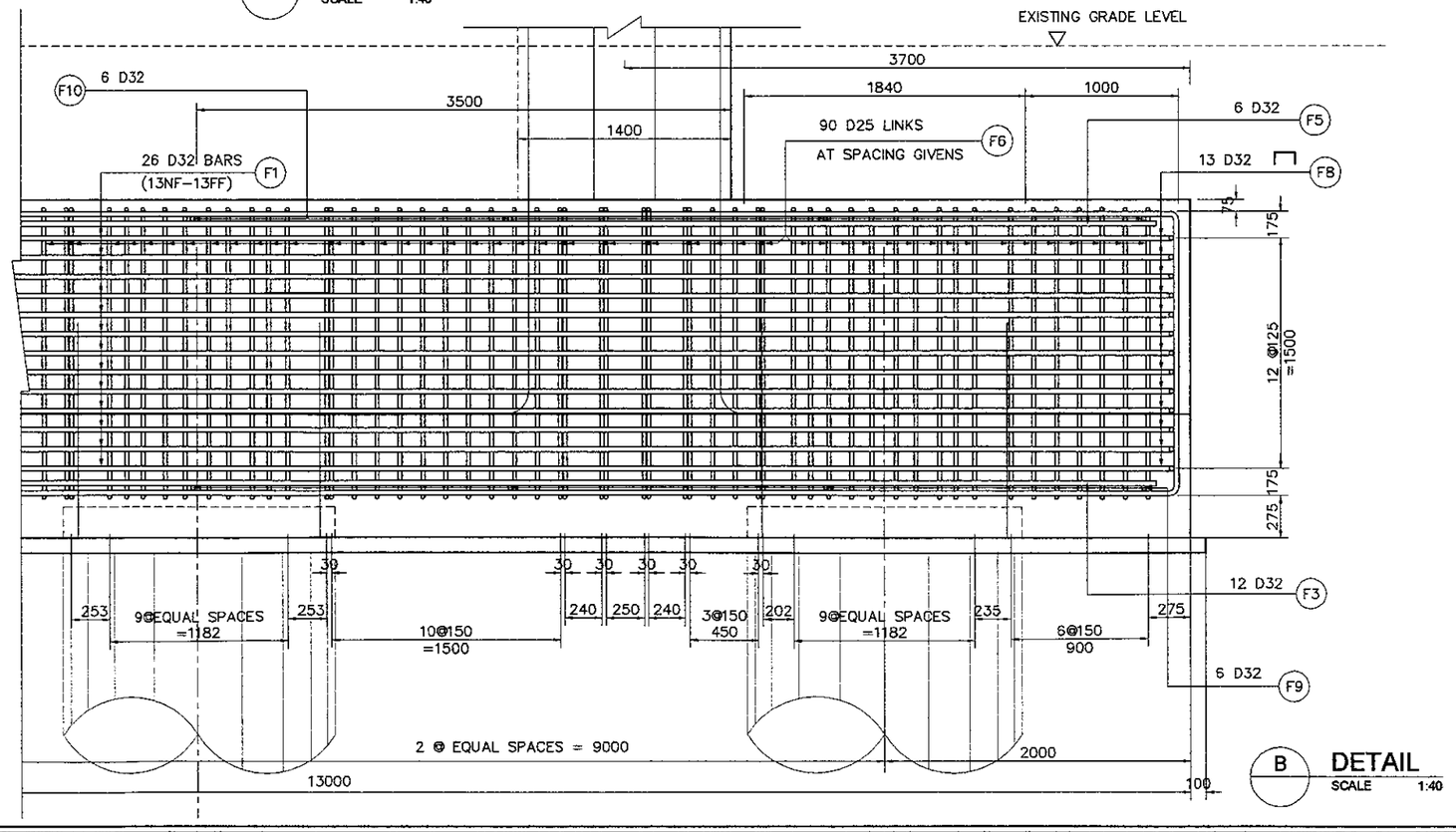

B DETAIL
SCALE 1:40

BAR BENDING DIAGRAM

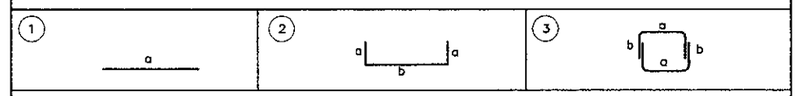

SCHEDULE OF REINFORCEMENT

LOCATION	BAR MARK	SIZE (mm)	BEND TYPE	DIMENSION (mm) OUT TO OUT a	b	c	d	e	f	LENGTH (mm)	NO. REQ'D.	UNIT WEIGHT (kg/m.)	WEIGHT (kg.)
ABUTMENT (A1) & (A2)	F1	32	1	12800						12800	26	6.31	2100
	F2	32	1	12800						12800	16	6.31	1292
	F3	32	1	12800						12800	12	6.31	969
	F4	32	1	12800						12800	14	6.31	1131
	F5	32	1	12800						12800	6	6.31	485
	F6	25	3	2250	1600					5450	180	3.85	3777
	F7	19	2	1850	500					2850	32	2.23	203
	F8	19	2	2250	500					3250	26	2.23	188
	F9	32	1	2000						2000	6	6.31	76
	F10	32	1	1160						1160	6	6.31	44
										TOTAL WEIGHT PER 1 FOOTING = 10,265 kg.			
	CONCRETE VOLUME PER 1 FOOTING = 68.64 M3												
	LEAN CONCRETE VOLUME PER 1 FOOTING = 3.38 M3												

THE REINFORCEMENT SHOWN ON THIS TABLE IS FOR REFERENCE ONLY, THE CONTRACTOR SHOULD CHECKED AND VERIFY ALL DIMENSIONS, SIZES AND QUANTITIES OF REINFORCEMENT.

NOTES :

1. ALL DIMENSIONS ARE IN MILLIMETERS
2. ELEVATION ARE IN METERS
3. CONCRETE ABUTMENT AND FOOTING fc' = 30 MPa
4. REINFORCING STEEL : YIELD STRENGTH = 390 N/mm2

PRINTED: OCT. 18, 2006

JAPAN INTERNATIONAL COOPERATION AGENCY KATAHIRA & ENGINEERS INTERNATIONAL	DESIGNED BY	CHECKED BY	SUBMITTED BY	REPUBLIC OF INDONESIA MINISTRY OF PUBLIC WORKS DIRECTORATE GENERAL OF HIGHWAYS	PROJECT AND LOCATION :	SCALE :	DRAWING TITLE :	DRAWING NO :
	Name: A. GOURLEY	Name: T. OKUMURA	Name: M. KIUCHI		DETAILED DESIGN STUDY OF NORTH JAVA CORRIDOR FLYOVER PROJECT TANGGULANGIN FLYOVER - CONTRACT PACKAGE 3 (PETERONGAN -TANGGULANGIN) EAST JAVA PROVINCE	1 : 80 1 : 50 FULL SIZE A3	**PIER COLUMN REINFORCEMENT** **(P1)**	TSB-016
	Sign	Sign	Sign	APPROVED BY: Ir. HERRY VAZA M,Eng.Sc				SHEET NO :
	Date	Date	Date	NIP. : 110038400 / Sign / Date				16 / 45

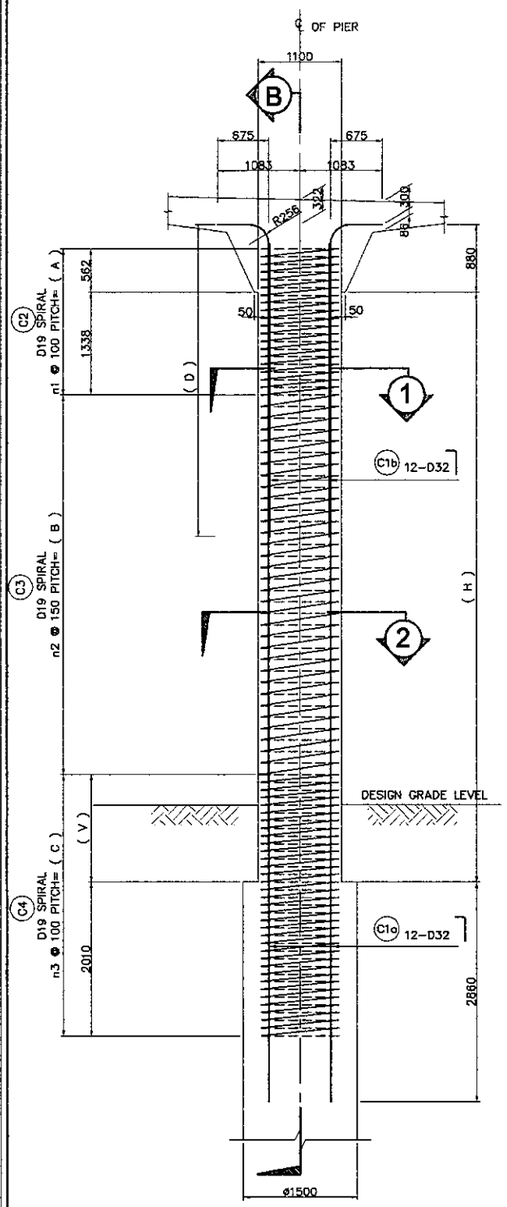

A ELEVATION
SCALE 1 : 80

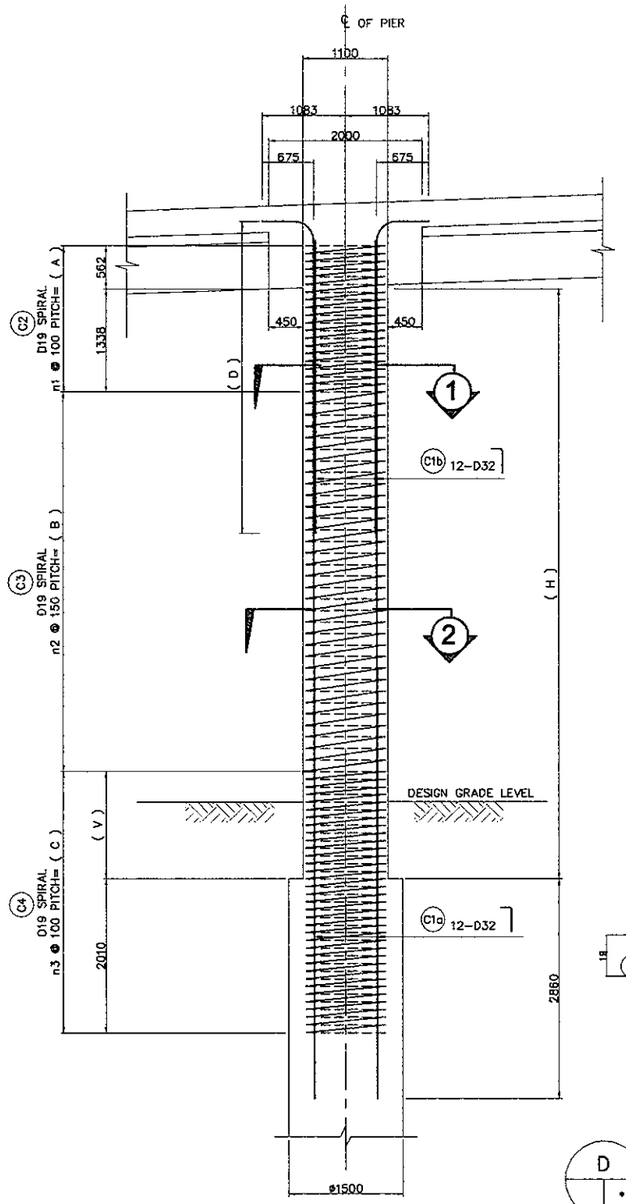

B ELEVATION
SCALE 1 : 80

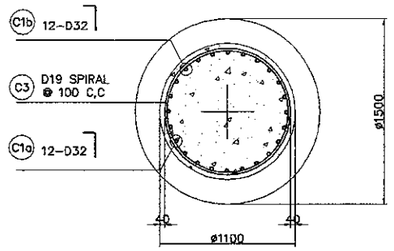

1 SECTION
SCALE 1 : 50

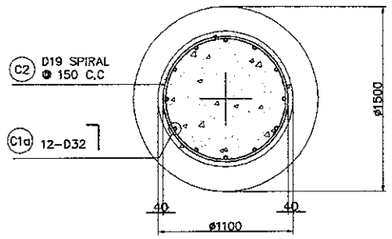

2 SECTION
SCALE 1 : 50

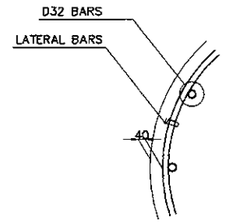

C TYPICAL BAR LAYOUT DETAIL
NOT TO SCALE

NOTES ON LAP-WELD CONNECTION :

1. SPIRAL REINFORCEMENT ARE LAP-WELD CONNECTED (FLARED-V-GROOVE TYPE)
2. WELDING SHOULD CONFORM TO AWS (D1.4) *STRUCTURAL WELDING CODE REINFORCED STEEL.*
3. USE ELECTRODE E90XX.
4. CARE SHOULD BE TAKEN NOT TO DAMAGE THE COLUMN MAIN BARS DURING WELDING.

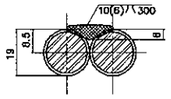

SECTION-D1
SINGLE FLARED-V-GROOVE WELD

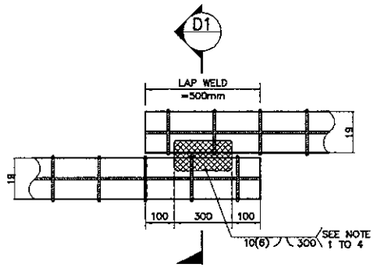

DIRECT LAP JOINT WITH BARS IN CONTACT

D DETAIL OF SPIRAL REINF. FULL LAP-WELD CONNECTION
NOT TO SCALE

BAR BENDING DIAGRAM

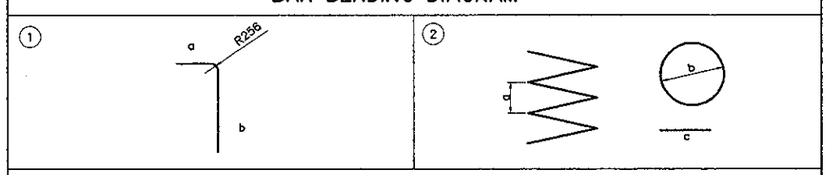

SCHEDULE OF REINFORCEMENT

LOCATION	BAR MARK	SIZE (mm)	BEND TYPE	DIMENSION(mm) OUT TO OUT a	b	c	d	e	f	LENGTH (mm)	NO. REQ'D.	UNIT WEIGHT (kg/m)	WEIGHT (kg)	VOLUME OF CONC. (M³)
P1L	C1a	32	1	675	10993					11668	12	6.31	884	6.893
	C1b	32	1	675	4730					5405	12	6.31	409	
	C2	19	2	100	1020	500				66786	1	2.23	149	
	C3	19	2	150	1020	500				100179	1	2.23	223	
	C4	19	2	100	1020	500				116875	1	2.23	261	
											SUB TOTAL = 1,918 Kgs			
P1R	C1a	32	1	675	10675					11350	12	6.31	859	6.590
	C1b	32	1	675	4570					5245	12	6.31	397	
	C2	19	2	100	1020	500				66786	1	2.23	149	
	C3	19	2	150	1020	500				93500	1	2.23	209	
	C4	19	2	100	1020	500				113536	1	2.23	253	
											SUB TOTAL = 1,867 Kgs			
											TOTAL = 3,793 Kgs			13.483

THE SCHEDULE OF REINFORCEMENT SHOWN ON THIS TABLE IS FOR REFERENCE ONLY. THE CONTRACTOR SHOULD CHECKED AND VERIFY ALL DIMENSIONS, SIZES AND QUANTITIES OF REINFORCEMENT.

COLUMN TYPE		CL-TF01
SIZE (mm)		1100 ø
MAIN BARS	SIZE (mm)	32
	NO. LAYERS	1
	NO. OF PCS.(a)	12
	NO. OF PCS.(b)	12
SPIRAL	SIZE (mm)	19

SCHEDULE OF PIER

PIER NO.	HEIGHT H (mm)	A (mm)	B (mm)	C (mm)	D (mm)	V (mm)	n1	n2	n3
P1L	7253	1900	4425	3500	4730	1490	20	30	35
P1R	6935	1900	4200	3400	4570	1390	20	28	34

NOTES :
1. ALL DIMENSIONS ARE IN MILLIMETERS
2. CONCRETE : fc' = 30 MPa
3. REINFORCING STEEL : YIELD STRENGTH = 390 N/mm2

PRINTED: OCT. 18, 2006

JAPAN INTERNATIONAL COOPERATION AGENCY / KATAHIRA & ENGINEERS INTERNATIONAL	DESIGNED BY	CHECKED BY	SUBMITTED BY	REPUBLIC OF INDONESIA MINISTRY OF PUBLIC WORKS DIRECTORATE GENERAL OF HIGHWAYS	PROJECT AND LOCATION :	SCALE :	DRAWING TITLE :	DRAWING NO :
	Name: A. GOURLEY	Name: T. OKUMURA	Name: M. KIUCHI		DETAILED DESIGN STUDY OF NORTH JAVA CORRIDOR FLYOVER PROJECT TANGGULANGIN FLYOVER - CONTRACT PACKAGE 3 (PETERONGAN -TANGGULANGIN) EAST JAVA PROVINCE	1 : 80 1 : 50 FULL SIZE A3	PIER COLUMN REINFORCEMENT (P2)	TSB-017
	Sign	Sign	Sign	APPROVED BY: Ir. HERRY VAZA M,Eng.Sc NIP. : 110038400				SHEET NO : 17 / 45
	Date	Date	Date	Sign / Date				

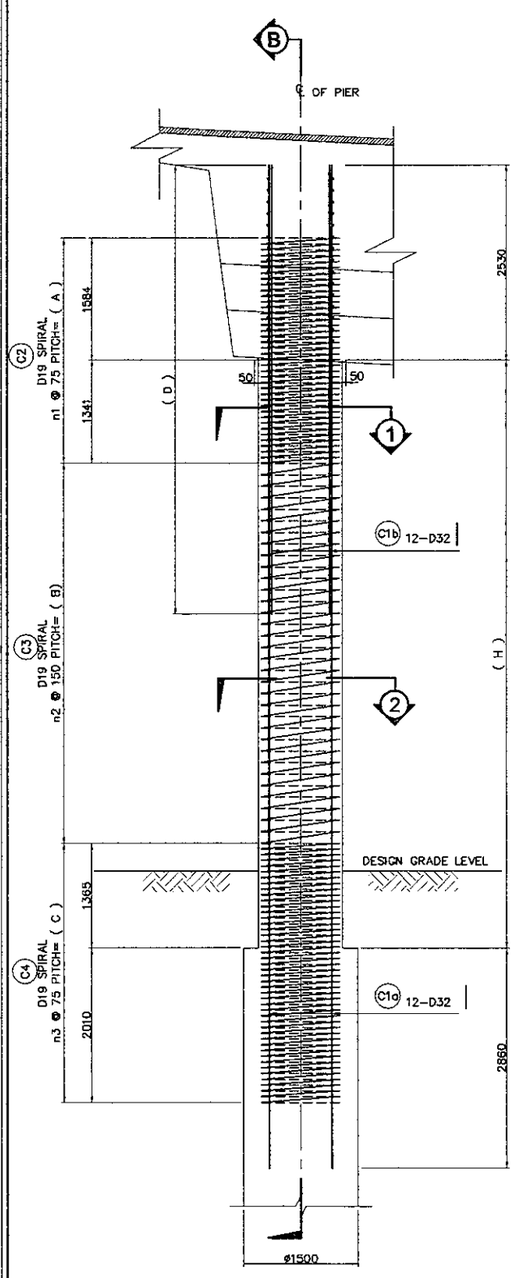

A ELEVATION
SCALE 1 : 80

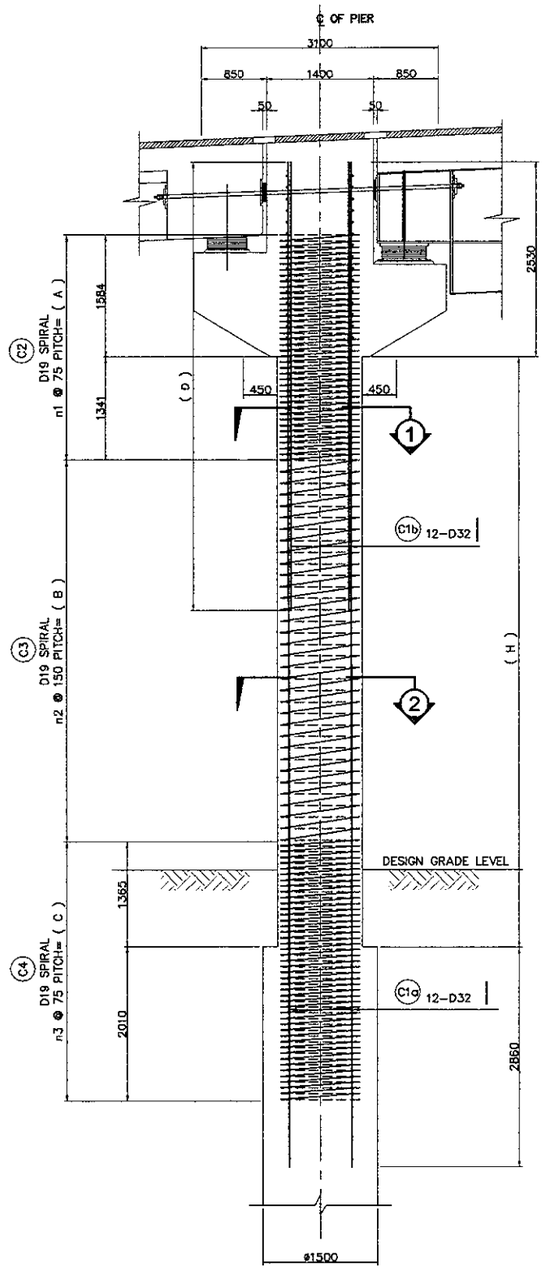

B ELEVATION
SCALE 1 : 80

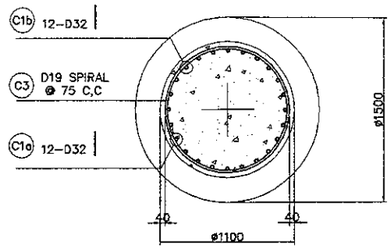

1 SECTION
SCALE 1 : 50

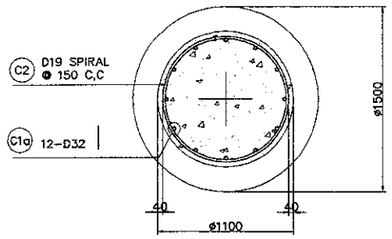

2 SECTION
SCALE 1 : 50

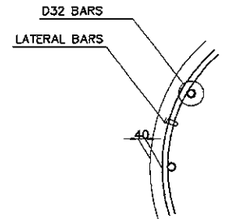

C TYPICAL BAR LAYOUT DETAIL
NOT TO SCALE

NOTES ON LAP-WELD CONNECTION :

1. SPIRAL REINFORCEMENT ARE LAP-WELD CONNECTED (FLARED-V-GROOVE TYPE)
2. WELDING SHOULD CONFORM TO AWS (D1.4) *STRUCTURAL WELDING CODE REINFORCED STEEL.*
3. USE ELECTRODE E90XX.
4. CARE SHOULD BE TAKEN NOT TO DAMAGE THE COLUMN MAIN BARS DURING WELDING.

NOTES :

1. ALL DIMENSIONS ARE IN MILLIMETERS
2. CONCRETE : fc' = 30 MPa
3. REINFORCING STEEL : YIELD STRENGTH = 390 N/mm2

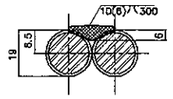

SECTION-D1
SINGLE FLARED-V-GROOVE WELD

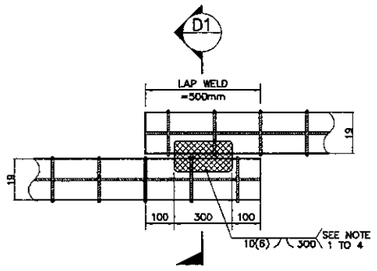

DIRECT LAP JOINT WITH BARS IN CONTACT

D DETAIL OF SPIRAL REINF. FULL LAP-WELD CONNECTION
NOT TO SCALE

BAR BENDING DIAGRAM

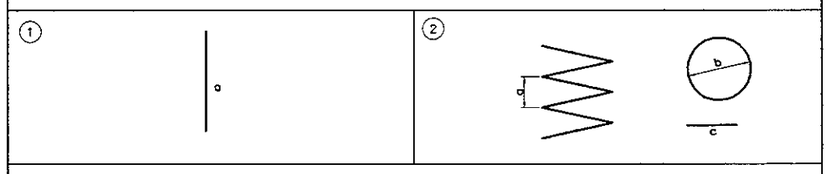

SCHEDULE OF REINFORCEMENT

LOCATION	BAR MARK	SIZE (mm)	BEND TYPE	DIMENSION(mm) OUT TO OUT a	b	c	d	e	f	LENGTH (mm)	NO. REQ'D.	UNIT WEIGHT (kg/m)	WEIGHT (kg)	VOLUME OF CONC. (M³)
P2L	C1a	32	1	11548						11548	12	6.31	874	5.852
	C1b	32	1	6710						6710	12	6.31	508	
	C2	19	2	75	1020	500				133571	1	2.23	298	
	C3	19	2	150	1020	500				76804	1	2.23	171	
	C4	19	2	75	1020	500				150268	1	2.23	335	
											SUB TOTAL =	2,187	Kgs	
P2R	C1a	32	1	11240						11240	12	6.31	851	5.559
	C1b	32	1	6560						6560	12	6.31	497	
	C2	19	2	75	1020	500				133571	1	2.23	298	
	C3	19	2	150	1020	500				70125	1	2.23	156	
	C4	19	2	75	1020	500				150268	1	2.23	335	
											SUB TOTAL =	2,137	Kgs	
											TOTAL =	4,324	Kgs	11.411

THE SCHEDULE OF REINFORCEMENT SHOWN ON THIS TABLE IS FOR REFERENCE ONLY. THE CONTRACTOR SHOULD CHECKED AND VERIFY ALL DIMENSIONS, SIZES AND QUANTITIES OF REINFORCEMENT.

COLUMN TYPE		CL-TF01
SIZE (mm)		ø 1100
MAIN BARS	SIZE (mm)	32
	NO. LAYERS	1
	NO. OF PCS.(a)	12
	NO. OF PCS.(b)	12
SPIRAL	SIZE (mm)	19

SCHEDULE OF PIER

PIER NO.	HEIGHT H (mm)	A (mm)	B (mm)	C (mm)	D (mm)	V (mm)	n1	n2	n3
P2L	6158	2925	3452	3375	6710	1365	40	23	45
P2R	5850	2925	3144	3375	6560	1365	40	21	45

PRINTED: OCT. 18, 2006

JAPAN INTERNATIONAL COOPERATION AGENCY / KATAHIRA & ENGINEERS INTERNATIONAL	DESIGNED BY	CHECKED BY	SUBMITTED BY	REPUBLIC OF INDONESIA MINISTRY OF PUBLIC WORKS DIRECTORATE GENERAL OF HIGHWAYS	PROJECT AND LOCATION :	SCALE :	DRAWING TITLE :	DRAWING NO :
	Name: A. GOURLEY	Name: T. OKUMURA	Name: M. KIUCHI		DETAILED DESIGN STUDY OF NORTH JAVA CORRIDOR FLYOVER PROJECT TANGGULANGIN FLYOVER - CONTRACT PACKAGE 3 (PETERONGAN -TANGGULANGIN) EAST JAVA PROVINCE	1 : 80 / 1 : 50	PIER COLUMN REINFORCEMENT (P7)	TSB-018
	Sign	Sign	Sign	APPROVED BY: Ir. HERRY VAZA M,Eng.Sc				SHEET NO :
	Date	Date	Date	NIP. : 110038400 / Sign / Date		FULL SIZE A3		18 / 45

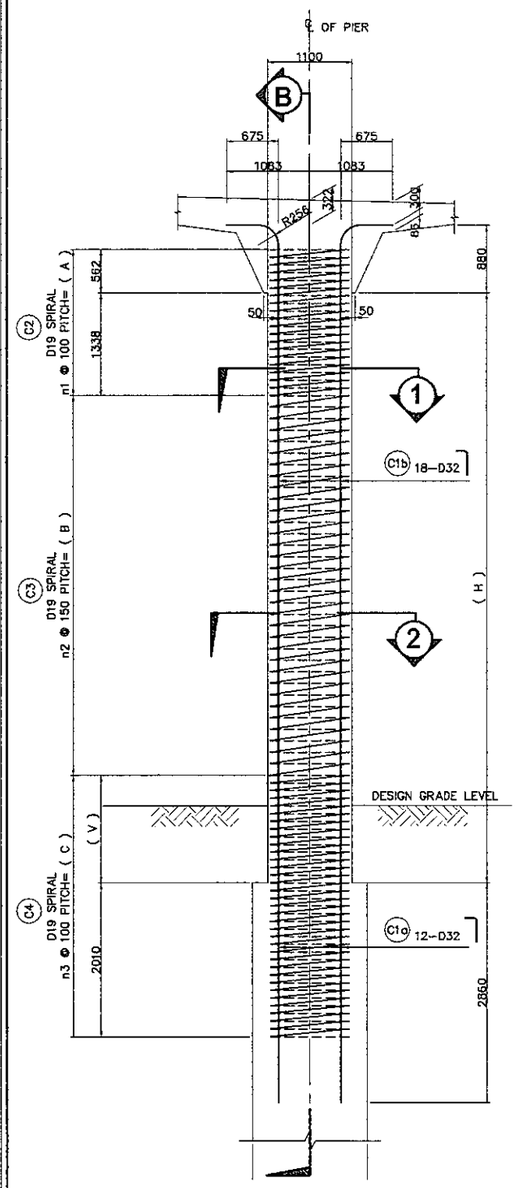

A ELEVATION
SCALE 1 : 80

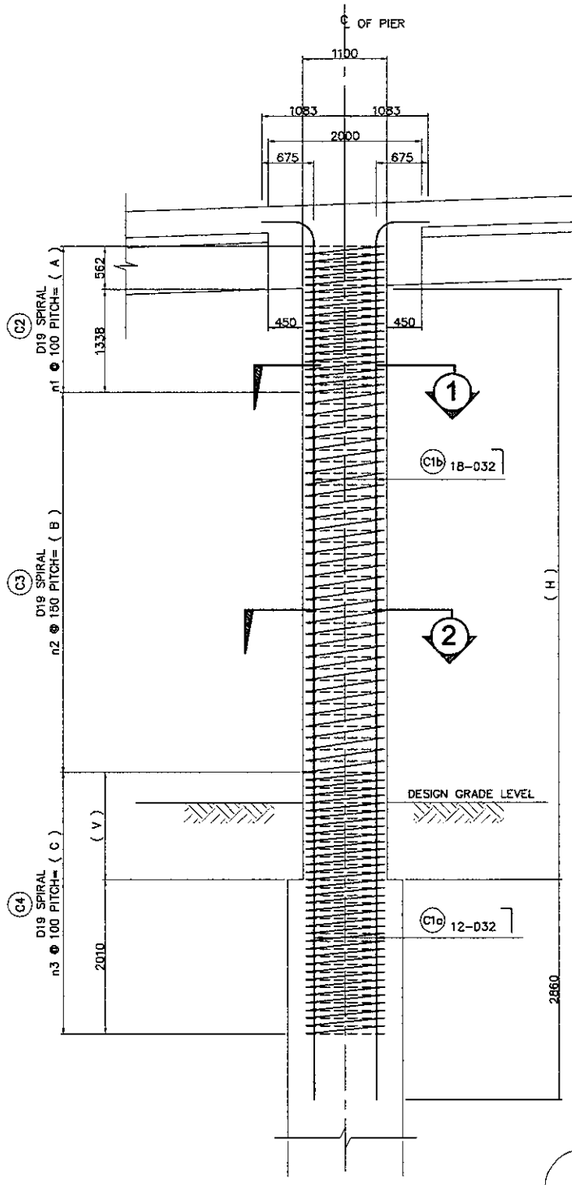

B ELEVATION
SCALE 1 : 80

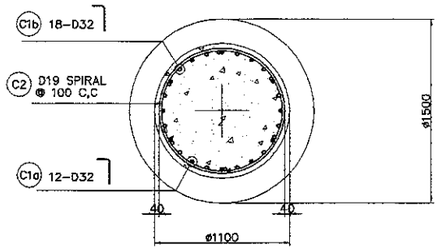

1 SECTION
SCALE 1 : 50

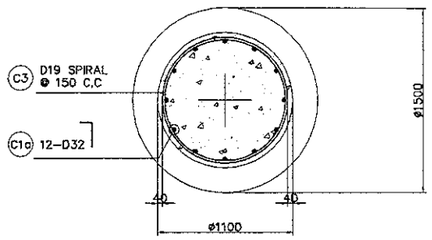

2 SECTION
SCALE 1 : 50

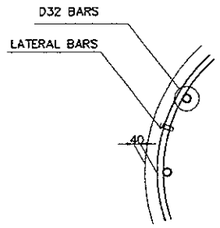

C TYPICAL BAR LAYOUT DETAIL
NOT TO SCALE

COLUMN TYPE		CL-TF03
SIZE (mm)		ø 1100
MAIN BARS	SIZE (mm)	32
	NO. LAYERS	1
	NO. OF PCS (a)	12
	NO. OF PCS (b)	18
SPIRAL	SIZE (mm)	19

NOTES ON LAP-WELD CONNECTION :
1. SPIRAL REINFORCEMENT ARE LAP-WELD CONNECTED (FLARED-V-GROOVE TYPE)
2. WELDING SHOULD CONFORM TO AWS (D1.4) *STRUCTURAL WELDING CODE REINFORCED STEEL.*
3. USE ELECTRODE E90XX.
4. CARE SHOULD BE TAKEN NOT TO DAMAGE THE COLUMN MAIN BARS DURING WELDING.

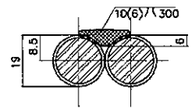

SECTION-D1
SINGLE FLARED-V-GROOVE WELD

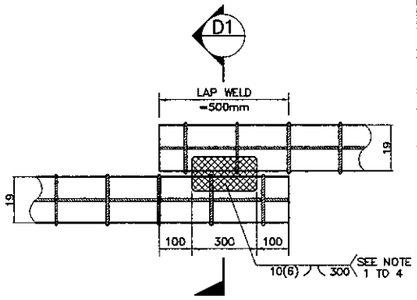

DIRECT LAP JOINT WITH BARS IN CONTACT

D DETAIL OF SPIRAL REINF. FULL LAP-WELD CONNECTION
NOT TO SCALE

BAR BENDING DIAGRAM

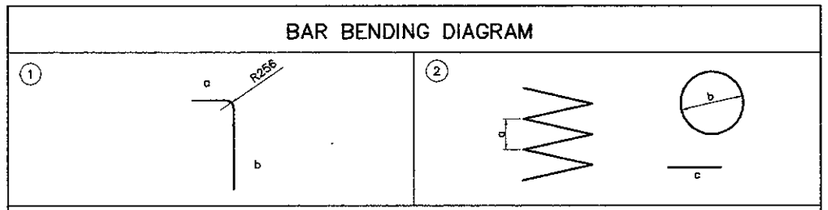

SCHEDULE OF REINFORCEMENT

LOCATION	BAR MARK	SIZE (mm)	BEND TYPE	DIMENSION(mm) OUT TO OUT a	b	c	d	e	f	LENGTH (mm)	NO. REQ'D.	UNIT WEIGHT (kg/m)	WEIGHT (kg)	VOLUME OF CONC. (M3)
P7L	C1a	32	1	675	11873					12548	12	6.31	950	7.729
	C1b	32	1	675	5980					6655	18	6.31	758	
	C2	19	2	100	1020	500				66786	1	2.23	149	
	C3	19	2	150	1020	500				120214	1	2.23	268	
	C4	19	2	100	1020	500				113536	1	2.23	253	
											SUB TOTAL =		2,376 Kgs	
P7R	C1a	32	1	675	12191					12866	12	6.31	974	8.031
	C1b	32	1	675	6170					6845	18	6.31	777	
	C2	19	2	100	1020	500				66786	1	2.23	149	
	C3	19	2	150	1020	500				126893	1	2.23	283	
	C4	19	2	100	1020	500				116875	1	2.23	261	
											SUB TOTAL =		2,444 Kgs	
											TOTAL P7 =		4,820 Kgs	15.760

THE SCHEDULE OF REINFORCEMENT SHOWN ON THIS TABLE IS FOR REFERENCE ONLY. THE CONTRACTOR SHOULD CHECKED AND VERIFY ALL DIMENSIONS, SIZES AND QUANTITIES OF REINFORCEMENT.

SCHEDULE OF PIER

PIER NO.	HEIGHT H (mm)	A (mm)	B (mm)	C (mm)	V (mm)	n1	n2	n3
P7L	8133	1900	5405	3400	1390	20	36	34
P7R	8451	1900	5623	3500	1490	20	38	35

NOTES :
1. ALL DIMENSIONS ARE IN MILLIMETERS
2. CONCRETE : fc' = 30 MPa
3. REINFORCING STEEL : YIELD STRENGTH = 390 N/mm2

PRINTED: OCT. 18, 2006

JAPAN INTERNATIONAL COOPERATION AGENCY / KATAHIRA & ENGINEERS INTERNATIONAL	DESIGNED BY	CHECKED BY	SUBMITTED BY	REPUBLIC OF INDONESIA MINISTRY OF PUBLIC WORKS DIRECTORATE GENERAL OF HIGHWAYS	PROJECT AND LOCATION :	SCALE :	DRAWING TITLE :	DRAWING NO :
	Name: A. GOURLEY	Name: T. OKUMURA	Name: M. KIUCHI		DETAILED DESIGN STUDY OF NORTH JAVA CORRIDOR FLYOVER PROJECT TANGGULANGIN FLYOVER - CONTRACT PACKAGE 3 (PETERONGAN -TANGGULANGIN) EAST JAVA PROVINCE	1 : 80 1 : 50	PIER COLUMN REINFORCEMENT (P8)	TSB-019
	Sign	Sign	Sign	APPROVED BY: Ir. HERRY VAZA M.Eng.Sc NIP. : 110038400				SHEET NO : 19 / 45
	Date	Date	Date	Sign / Date		FULL SIZE A3		

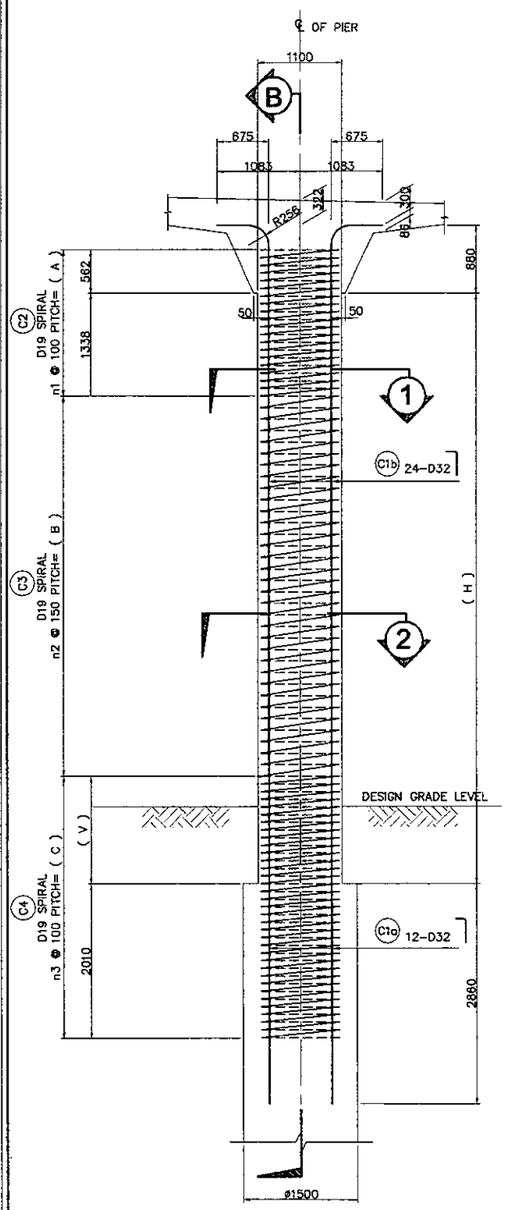

A ELEVATION
SCALE 1 : 80

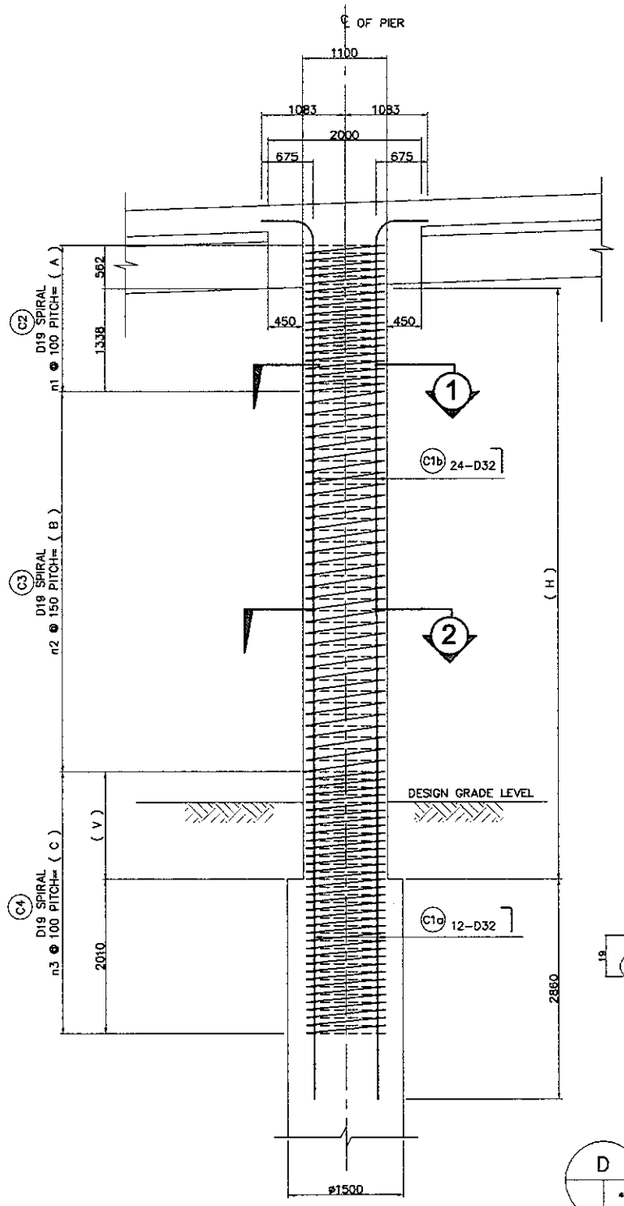

B ELEVATION
SCALE 1 : 80

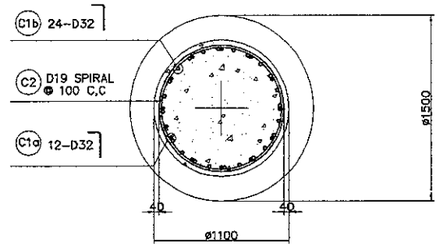

1 SECTION
SCALE 1 : 50

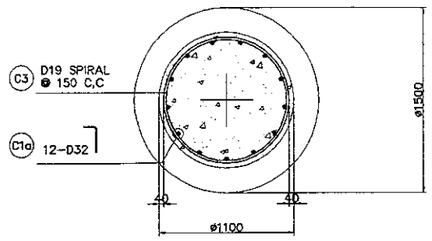

2 SECTION
SCALE 1 : 50

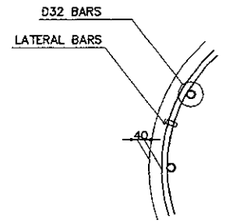

C TYPICAL BAR LAYOUT DETAIL
NOT TO SCALE

NOTES ON LAP-WELD CONNECTION :

1. SPIRAL REINFORCEMENT ARE LAP-WELD CONNECTED (FLARED-V-GROOVE TYPE)
2. WELDING SHOULD CONFORM TO AWS (D1.4) *STRUCTURAL WELDING CODE REINFORCED STEEL.*
3. USE ELECTRODE E90XX.
4. CARE SHOULD BE TAKEN NOT TO DAMAGE THE COLUMN MAIN BARS DURING WELDING.

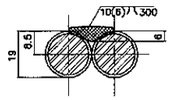

SECTION-D1
SINGLE FLARED-V-GROOVE WELD

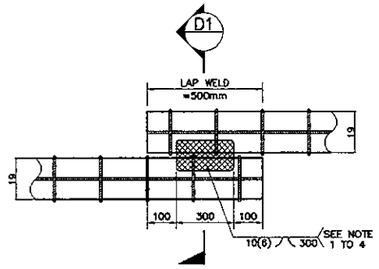

DIRECT LAP JOINT WITH BARS IN CONTACT

D DETAIL OF SPIRAL REINF. FULL LAP-WELD CONNECTION
NOT TO SCALE

BAR BENDING DIAGRAM

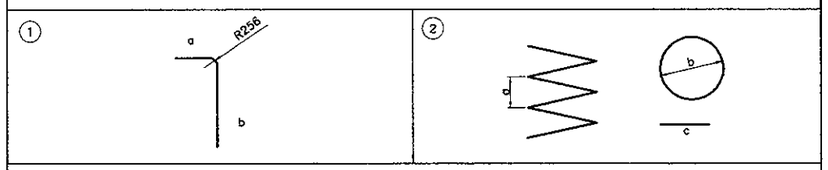

SCHEDULE OF REINFORCEMENT

LOCATION	BAR MARK	SIZE (mm)	BEND TYPE	DIMENSION(mm) OUT TO OUT a	b	c	d	e	f	LENGTH (mm)	NO. REQ'D.	UNIT WEIGHT (kg/m)	WEIGHT (kg)	VOLUME OF CONC. (M³)
P8L	C1a	32	1	675	12422					13097	12	6.31	992	8.251
	C1b	32	1	675	6890					7565	24	6.31	1146	
	C2	19	2	100	1020	500				66786	1	2.23	149	
	C3	19	2	150	1020	500				133571	1	2.23	298	
	C4	19	2	100	1020	500				113536	1	2.23	253	
											SUB TOTAL =	2,838	Kgs	
P8R	C1a	32	1	675	12660					13335	12	6.31	1010	8.477
	C1b	32	1	675	7050					7725	24	6.31	1170	
	C2	19	2	100	1020	500				66786	1	2.23	149	
	C3	19	2	150	1020	500				136911	1	2.23	305	
	C4	19	2	100	1020	500				116876	1	2.23	261	
											SUB TOTAL =	2,894	Kgs	
											TOTAL =	5,732	Kgs	16.727

THE SCHEDULE OF REINFORCEMENT SHOWN ON THIS TABLE IS FOR REFERENCE ONLY. THE CONTRACTOR SHOULD CHECKED AND VERIFY ALL DIMENSIONS, SIZES AND QUANTITIES OF REINFORCEMENT.

COLUMN TYPE		CL-TF04
SIZE (mm)		1100 ø
MAIN BARS	SIZE (mm)	32
	NO. LAYERS	1
	NO. OF PCS.(a)	12
	NO. OF PCS.(b)	24
SPIRAL	SIZE (mm)	19

SCHEDULE OF PIER

PIER NO.	HEIGHT H (mm)	A (mm)	B (mm)	C (mm)	V (mm)	n1	n2	n3
P8L	8682	1900	5904	3400	1390	20	40	34
P8R	8920	1900	6092	3500	1490	20	41	35

NOTES :

1. ALL DIMENSIONS ARE IN MILLIMETERS
2. CONCRETE : fc' = 30 MPa
3. REINFORCING STEEL : YIELD STRENGTH = 390 N/mm2

JAPAN INTERNATIONAL COOPERATION AGENCY / KATAHIRA & ENGINEERS INTERNATIONAL	DESIGNED BY	CHECKED BY	SUBMITTED BY	REPUBLIC OF INDONESIA MINISTRY OF PUBLIC WORKS DIRECTORATE GENERAL OF HIGHWAYS	PROJECT AND LOCATION :	SCALE :	DRAWING TITLE :	DRAWING NO :
	Name: A. GOURLEY	Name: T. OKUMURA	Name: M. KIUCHI		DETAILED DESIGN STUDY OF NORTH JAVA CORRIDOR FLYOVER PROJECT TANGGULANGIN FLYOVER - CONTRACT PACKAGE 3 (PETERONGAN -TANGGULANGIN) EAST JAVA PROVINCE		SCHEDULE OF REINFORCED CONCRETE COLUMN	TSB-020
	Sign:	Sign:	Sign:	APPROVED BY: Ir. HERRY VAZA M.Eng.Sc NIP. : 110038400		FULL SIZE A3		SHEET NO : 20 / 45
	Date:	Date:	Date:	Sign: / Date:				

SCHEDULE OF COLUMN

CL-TF 01

PIER P1 & P2

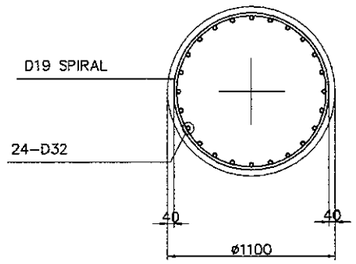

COLUMN TYPE		CL–TF 01
SIZE (mm)		ø 1100
MAIN BARS	SIZE (mm)	32
	NO. LAYERS	1
	NO. OF PCS.	24
SPIRAL	SIZE (mm)	19
STEEL RATIO, ρ		2.00%

CL-TF 02

PIER P3, P4, P5 & P6

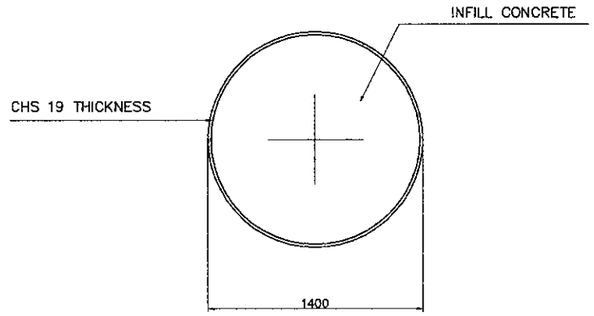

COLUMN TYPE : COMPOSITE COLUMN
SIZE (mm) : 1400

CL-TF 03

PIER P7

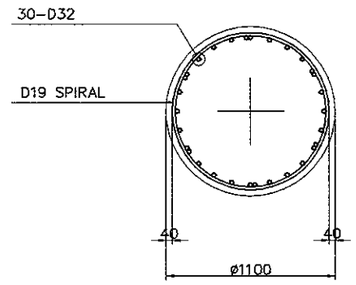

COLUMN TYPE		CL–TF 03
SIZE (mm)		ø 1100
MAIN BARS	SIZE (mm)	32
	NO. LAYERS	1
	NO. OF PCS.	30
SPIRAL	SIZE (mm)	19
STEEL RATIO, ρ		2.50%

CL-TF 04

PIER P8

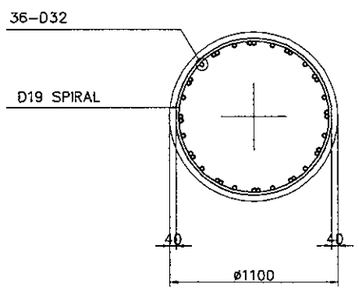

COLUMN TYPE		CL–TF 04
SIZE (mm)		ø 1100
MAIN BARS	SIZE (mm)	32
	NO. LAYERS	1
	NO. OF PCS.	36
SPIRAL	SIZE (mm)	19
STEEL RATIO, ρ		3.00%

CL-TF 05

ABUTMENT A1 & A2

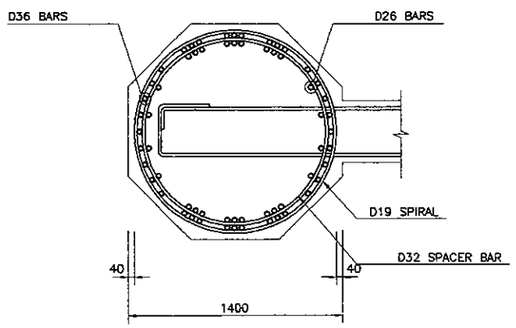

COLUMN TYPE		CL–TF 05
SIZE (mm)		1400
MAIN BARS	SIZE (mm)	32
	NO. LAYERS	2
	NO. OF PCS (1)	36
	NO. OF PCS (2)	26
SPIRAL	SIZE (mm)	19
STEEL RATIO, ρ		3.00%

NOTES :

1. LAP SPLICE OF COLUMN MAIN BARS WILL NOT BE ALLOWED IN ANY LOCATION.

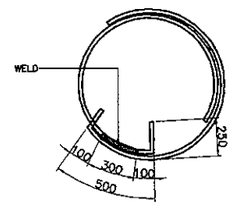

PLAN

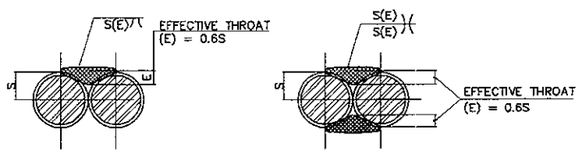

A. SINGLE B. DOUBLE

WHERE: S = RADIUS OF REINFORCING BAR
E = EFFECTIVE THROAT

SECTIONS

DETAILS OF LAP WELD SPLICE FOR SPIRAL

PRINTED: OCT. 18, 2006

JICA JAPAN INTERNATIONAL COOPERATION AGENCY / KATAHIRA & ENGINEERS INTERNATIONAL	DESIGNED BY	CHECKED BY	SUBMITTED BY	REPUBLIC OF INDONESIA MINISTRY OF PUBLIC WORKS DIRECTORATE GENERAL OF HIGHWAYS	PROJECT AND LOCATION :	SCALE :	DRAWING TITLE :	DRAWING NO :
	Name A. GOURLEY	Name T. OKUMURA	Name M. KIUCHI		DETAILED DESIGN STUDY OF NORTH JAVA CORRIDOR FLYOVER PROJECT TANGGULANGIN FLYOVER - CONTRACT PACKAGE 3 (PETERONGAN-TANGGULANGIN) EAST JAVA PROVINCE	1 : 40	PIER COPING REINFORCEMENT P2 (EXP.) (1 OF 4)	TSB-021
	Sign	Sign	Sign	APPROVED BY Ir. HERRY VAZA M,Eng.Sc NIP. : 110038400 Sign		1 : 50		SHEET NO :
	Date	Date	Date	Date		FULL SIZE A3		21 / 45

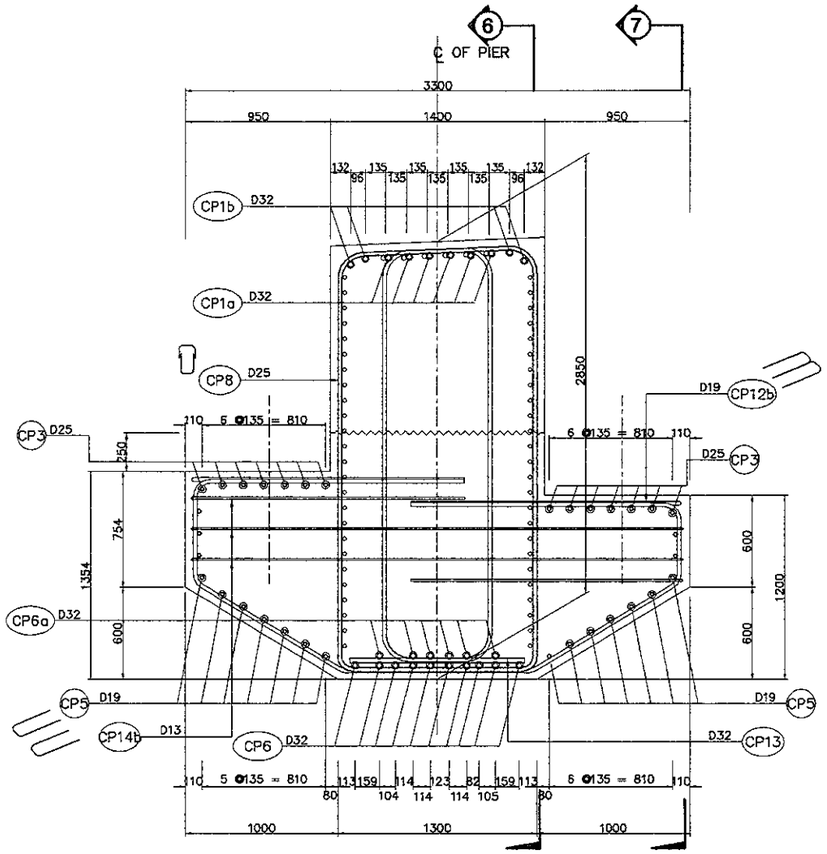

1 SECTION
SCALE : 1:40

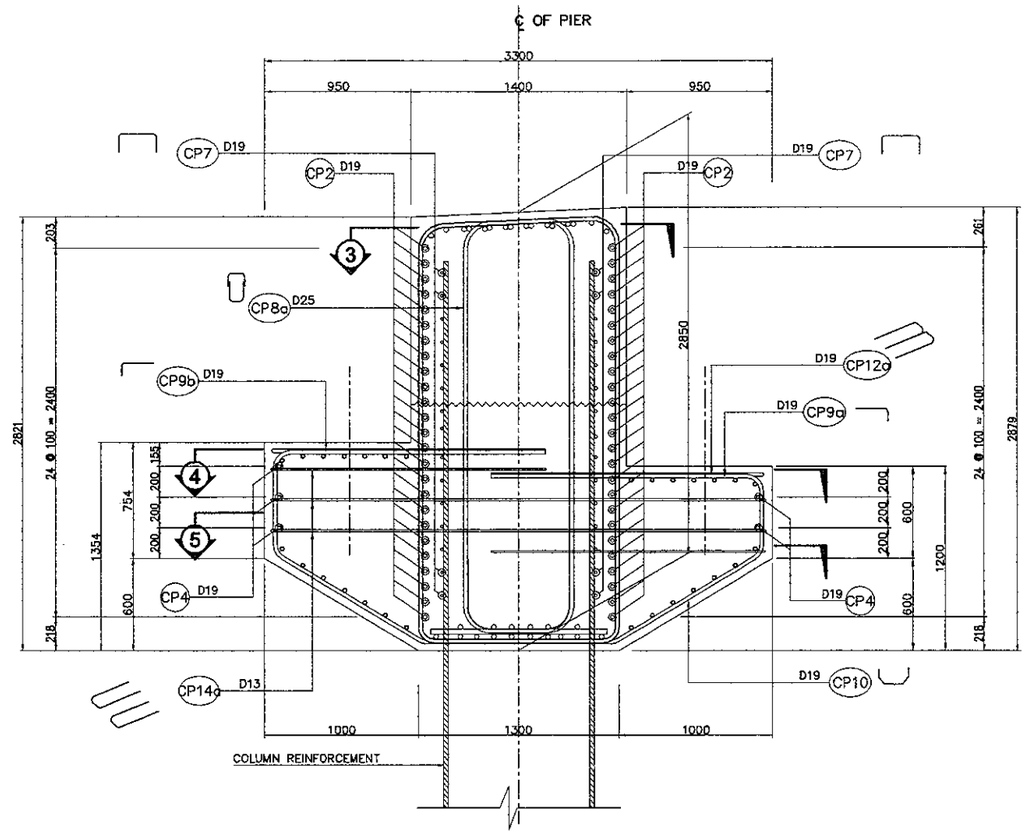

2 SECTION
SCALE : 1:40

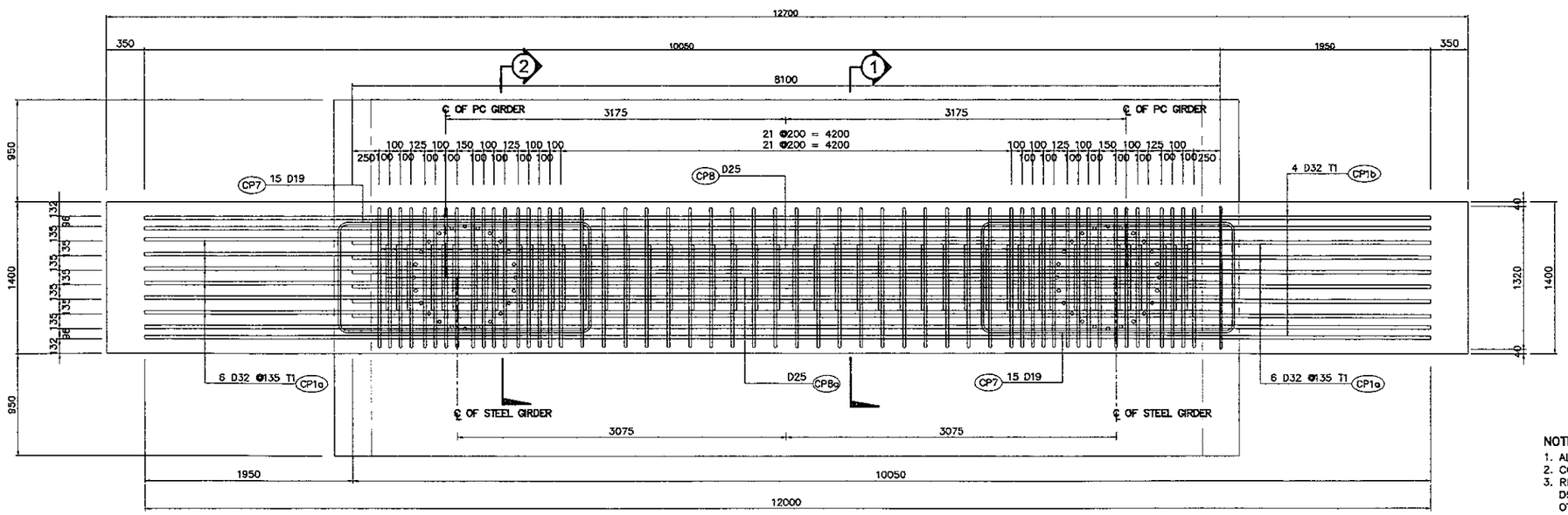

3 PLAN ON TOP BARS
SCALE : 1:50

NOTES :
1. ALL DIMENSIONS ARE IN MILIMETERS.
2. CONCRETE : Fc' = 30MPa
3. REINFORCING STEEL=
   D51 : YIELD STRENGTH = 345 N/mm2
   OTHERS : YIELD STRENGTH = 390 N/mm2

PRINTED: OCT. 18, 2006

JAPAN INTERNATIONAL COOPERATION AGENCY KATAHIRA & ENGINEERS INTERNATIONAL	DESIGNED BY	CHECKED BY	SUBMITTED BY	REPUBLIC OF INDONESIA MINISTRY OF PUBLIC WORKS DIRECTORATE GENERAL OF HIGHWAYS	PROJECT AND LOCATION :	SCALE :	DRAWING TITLE :	DRAWING NO :
	Name: A. GOURLEY	Name: T. OKUMURA	Name: M. KIUCHI		DETAILED DESIGN STUDY OF NORTH JAVA CORRIDOR FLYOVER PROJECT TANGGULANGIN FLYOVER - CONTRACT PACKAGE 3 (PETERONGAN-TANGGULANGIN) EAST JAVA PROVINCE	1 : 40 1 : 50	PIER COPING REINFORCEMENT P2 (EXP.) (2 OF 4)	TSB-022
	Sign	Sign	Sign	APPROVED BY: Ir. HERRY VAZA M,Eng.Sc NIP. : 110038400 — Sign				SHEET NO :
	Date	Date	Date	Date		FULL SIZE A3		22 / 45

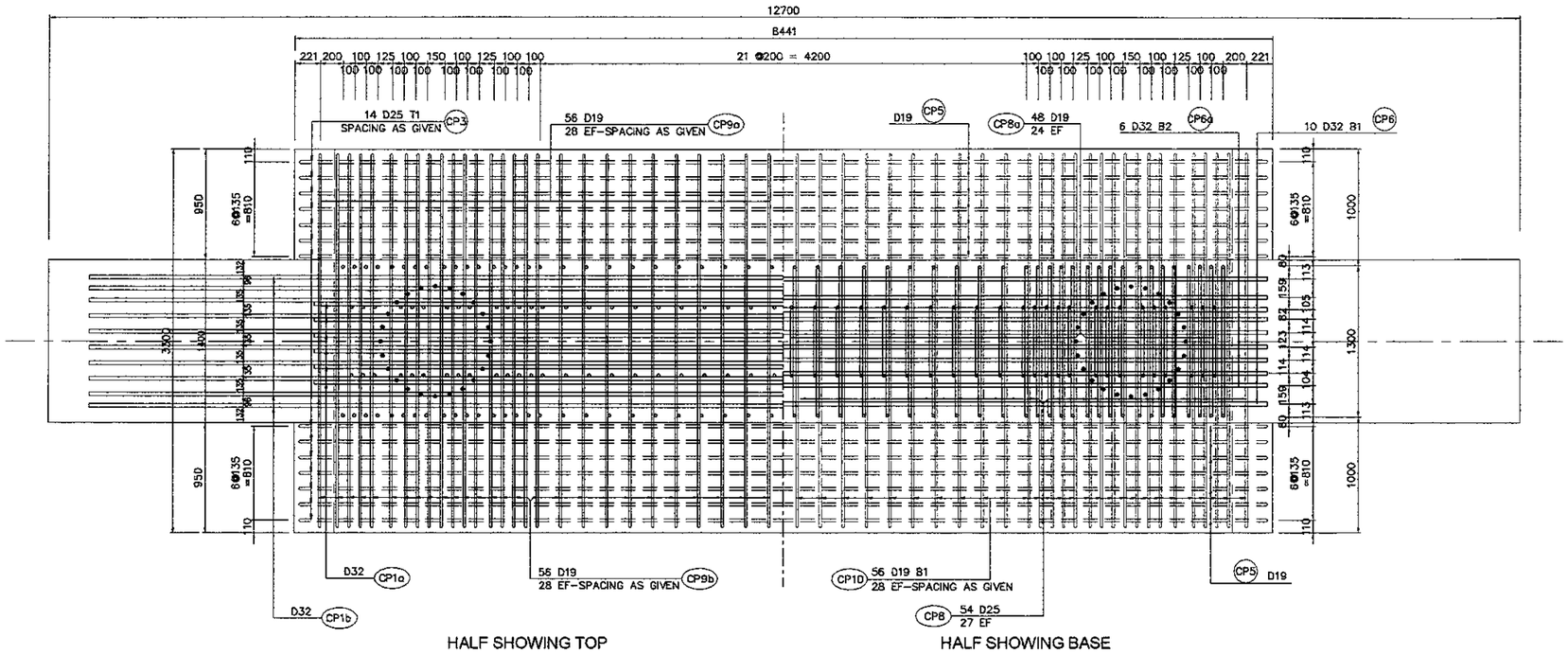

4 - PLAN ON BEAM LEDGE
SCALE : 1:50

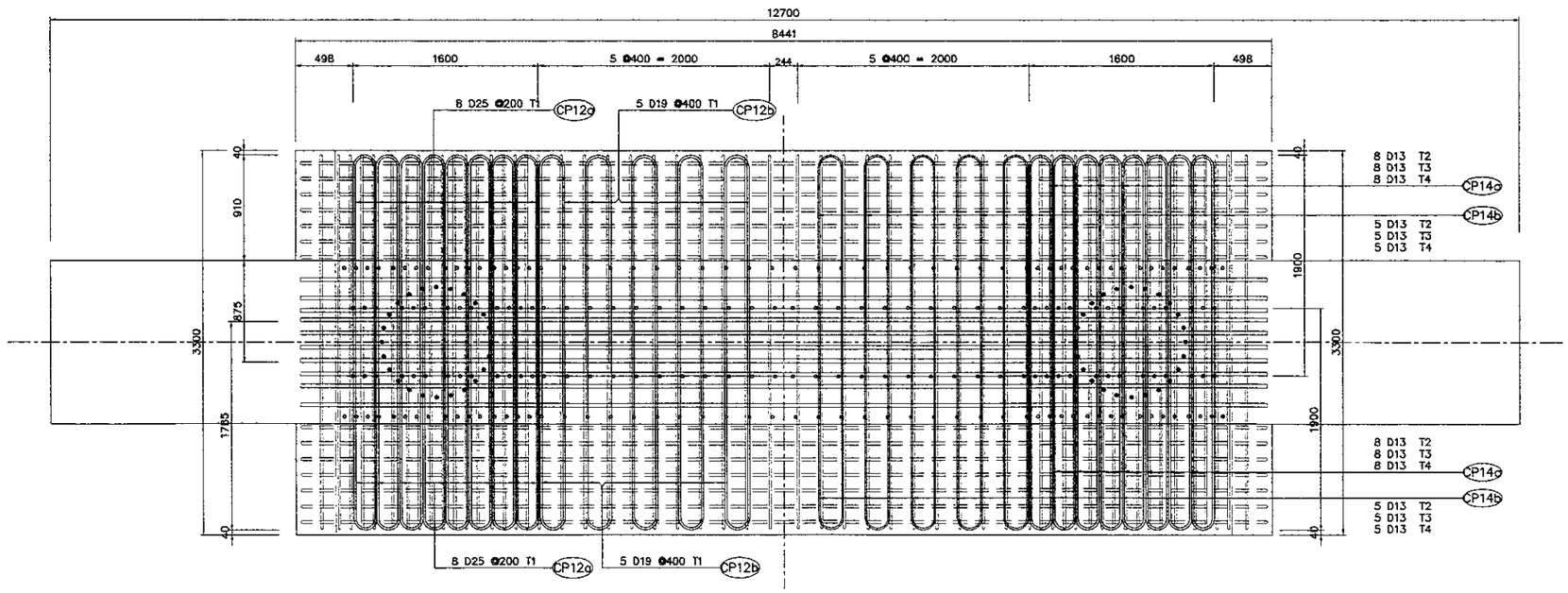

5 - STIRRUP PLACING
SCALE : 1:50

NOTES :
1. ALL DIMENSIONS ARE IN MILIMETERS.
2. CONCRETE : Fc' = 30MPa
3. REINFORCING STEEL=
   D51 : YIELD STRENGTH = 345 N/mm2
   OTHERS : YIELD STRENGTH = 390 N/mm2

PRINTED: NOV. 02, 2005

JAPAN INTERNATIONAL COOPERATION AGENCY / KATAHIRA & ENGINEERS INTERNATIONAL	DESIGNED BY	CHECKED BY	SUBMITTED BY	REPUBLIC OF INDONESIA MINISTRY OF PUBLIC WORKS DIRECTORATE GENERAL OF HIGHWAYS	PROJECT AND LOCATION :	SCALE :	DRAWING TITLE :	DRAWING NO :
	Name: A. GOURLEY	Name: T. OKUMURA	Name: M. KIUCHI		DETAILED DESIGN STUDY OF NORTH JAVA CORRIDOR FLYOVER PROJECT TANGGULANGIN FLYOVER - CONTRACT PACKAGE 3 (PETERONGAN-TANGGULANGIN) EAST JAVA PROVINCE	1 : 40 1 : 50	PIER COPING REINFORCEMENT P2 (EXP.) (3 OF 4)	TSB-023
	Sign	Sign	Sign	APPROVED BY: Ir. HERRY VAZA M.Eng.Sc NIP. : 110038400				SHEET NO : 23 / 45
	Date	Date	Date	Sign / Date		FULL SIZE A3		

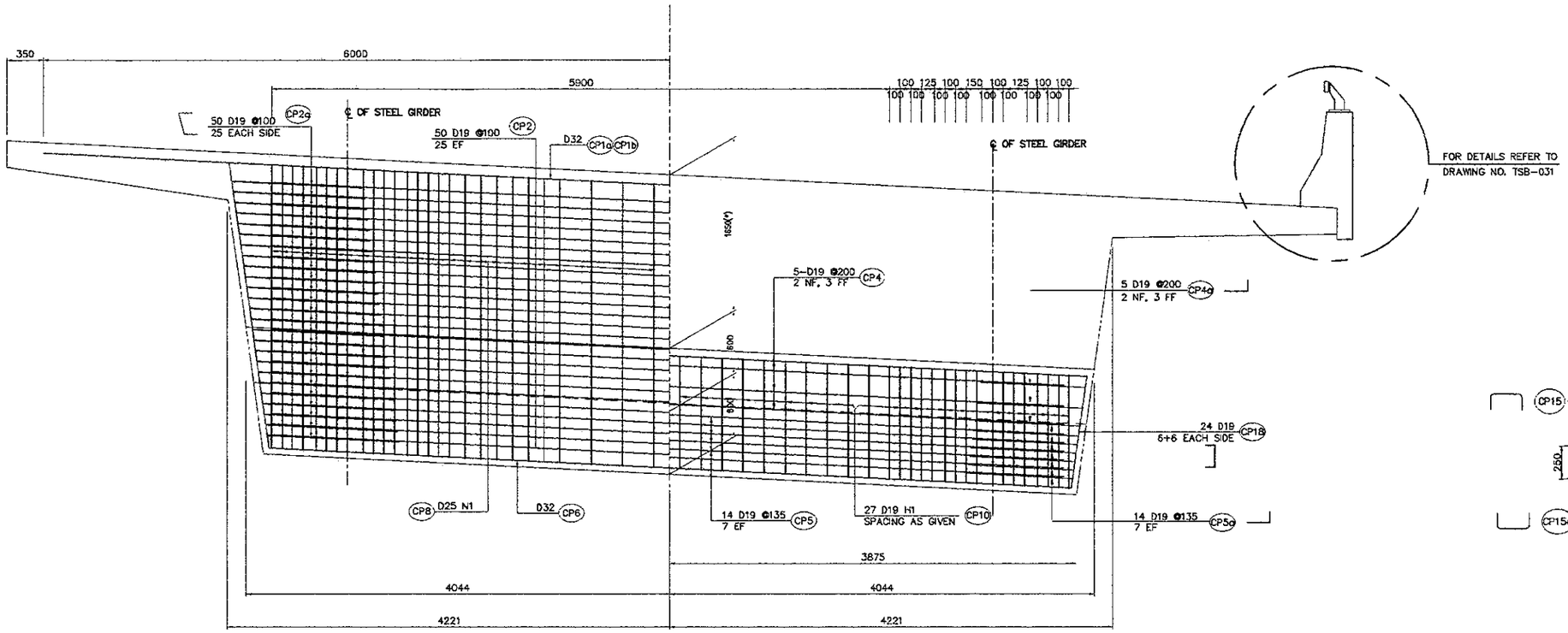

6 ELEVATION ON COPING TOP
SCALE : 1:50

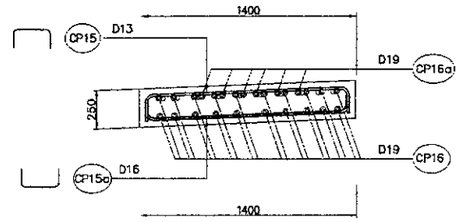

10 SECTION A-A
SCALE : 1:40

7 ELEVATION ON BEAM LEDGE
SCALE : 1:50

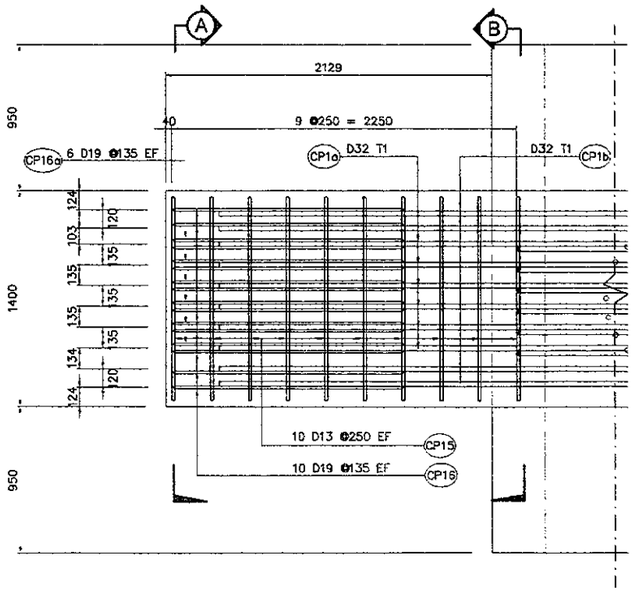

8 PLAN ON COPING CANTILEVER
SCALE : 1:40

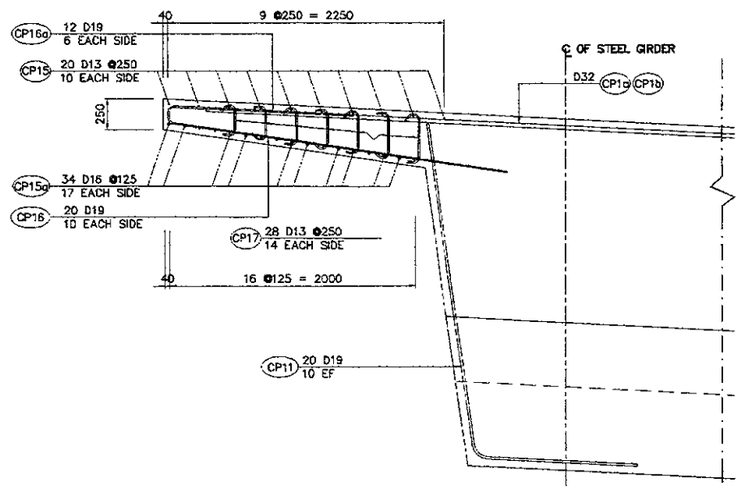

9 ELEVATION ON COPING CANTILEVER
SCALE : 1:50

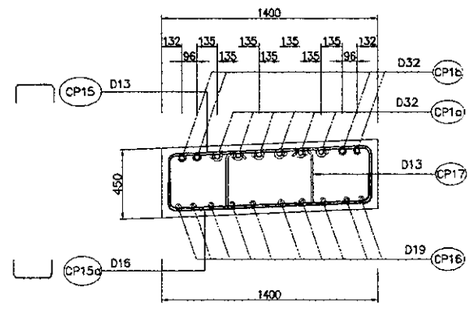

11 SECTION B-B
SCALE : 1:40

NOTES :
1. ALL DIMENSIONS ARE IN MILIMETERS.
2. CONCRETE : Fc' = 30MPa
3. REINFORCING STEEL=
   D51 : YIELD STRENGTH = 345 N/mm2
   OTHERS : YIELD STRENGTH = 390 N/mm2

PRINTED: NOV. 02, 2006

JAPAN INTERNATIONAL COOPERATION AGENCY / KATAHIRA & ENGINEERS INTERNATIONAL	DESIGNED BY	CHECKED BY	SUBMITTED BY	REPUBLIC OF INDONESIA MINISTRY OF PUBLIC WORKS DIRECTORATE GENERAL OF HIGHWAYS	PROJECT AND LOCATION :	SCALE :	DRAWING TITLE :	DRAWING NO :
	Name: A. GOURLEY	Name: T. OKUMURA	Name: M. KIUCHI	APPROVED BY: Ir. HERRY VAZA M,Eng.Sc NIP. : 110038400	DETAILED DESIGN STUDY OF NORTH JAVA CORRIDOR FLYOVER PROJECT TANGGULANGIN FLYOVER - CONTRACT PACKAGE 3 (PETERONGAN-TANGGULANGIN) EAST JAVA PROVINCE	1 : 50	PIER COPING REINFORCEMENT P2 (EXP.) (4 OF 4)	TSB-024
	Sign	Sign	Sign	Sign				SHEET NO :
	Date	Date	Date	Date		FULL SIZE A3		24 / 45

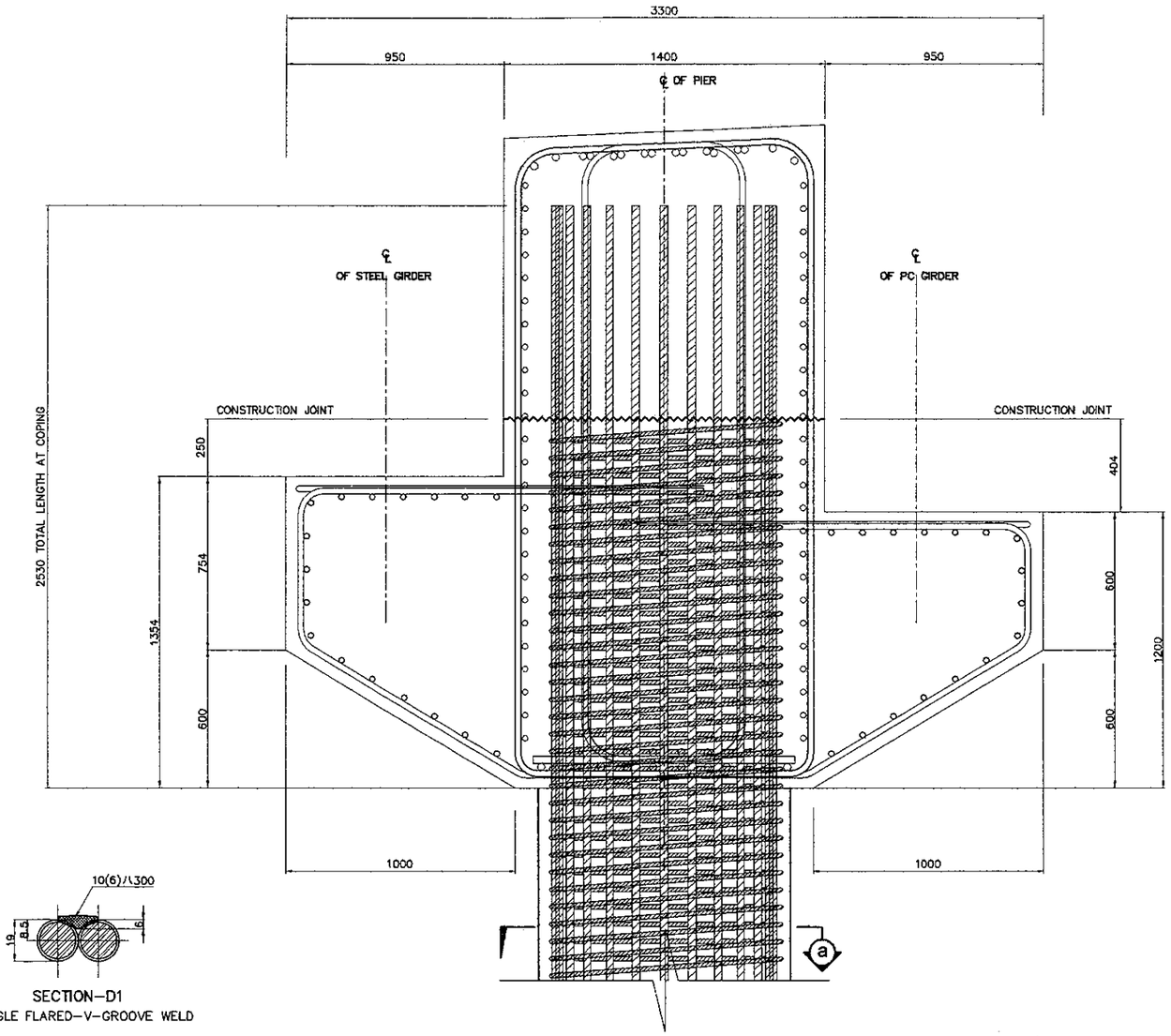

A — ELEVATION
SCALE : 1:25

BAR BENDING DIAGRAM

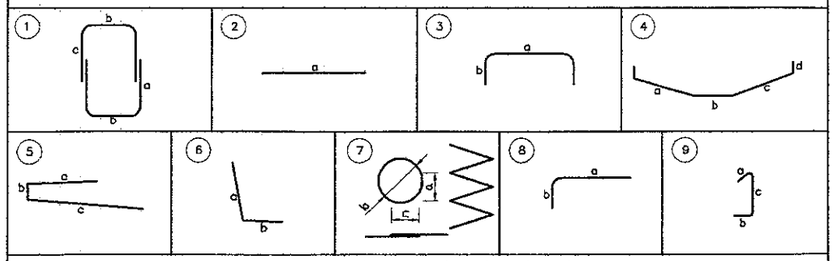

SCHEDULE OF REINFORCEMENT

LOCATION	BAR MARK	SIZE (mm)	BEND TYPE	DIMENSION (mm) OUT TO OUT a	b	c	d	e	f	LENGTH (mm)	NO. REQ'D.	UNIT WEIGHT (kg/m.)	WEIGHT (kg.)	VOLUME OF CONCRETE (m3)
COPING PIER 2	COPING													48.99
	CP1a	32	2	10050						10050	12	6.31	761	
	CP1b	32	2	12000						12000	4	6.31	303	
	CP2	19	2	7800						7800	50	2.23	870	
	CP2a	19	3	1280	1250					3780	50	2.23	421	
	CP3	25	2	8000						8000	14	3.85	431	
	CP4	19	2	7800						7800	5	2.23	87	
	CP4a	19	8	1580	800					2380	10	2.23	53	
	CP5	19	2	7800						7800	14	2.23	244	
	CP5a	19	8	1580	800					2380	28	2.23	149	
	CP6	32	3	7800	550					8700	10	6.31	549	
	CP6a	32	3	7400	550					8500	6	6.31	322	
	CP7	19	3	1100	1800					4700	60	2.23	629	
	CP8	25	1	2620	1320	1205				10292	54	3.85	440	
	CP8a	25	1	2556	675	1205				8874	48	3.85	1640	
	CP9a	19	8	1800	450					2250	56	2.23	281	
	CP9b	19	8	1665	700					2365	56	2.23	295	
	CP10	19	4	1165	1250	1165	430			4442	56	2.23	555	
	CP11	19	6	2750	1250					4000	20	2.23	178	
	CP12a	25	3	200	1800					3800	32	3.85	468	
	CP12b	19	3	200	1800					3800	20	2.23	170	
	CP13	32	2	1100						1100	6	6.31	42	
	CP14a	13	3	200	1800					3800	96	1.04	380	
	CP14b	13	3	200	1800					3800	60	1.04	238	
	CP15	13	3	1300	200					1700	20	1.04	35	
	CP15a	13	3	1300	350					2000	34	1.04	71	
	CP16	19	5	2200	165	3000				5365	20	2.23	240	
	CP16a	19	5	2200	165	165				2530	12	2.23	68	
	CP17	13	9	350	165	165				680	28	1.04	20	
	CP18	19	5	400	1100	400				1900	24	2.23	102	
										TOTAL WEIGHT FOR / COPING = 11,740 Kgs.				

THE REINFORCEMENT SHOWN ON THIS TABLE IS FOR REFERENCE ONLY, THE CONTRACTOR SHOULD CHECKED AND VERIFY ALL DIMENSIONS, SIZES AND QUANTITIES OF REINFORCEMENT.

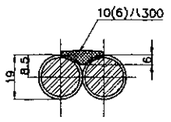

SECTION–D1
SINGLE FLARED–V–GROOVE WELD

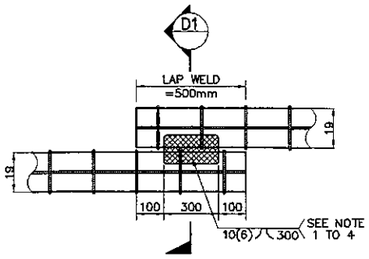

DIRECT LAP JOINT WITH IN CONTACT

A — DETAIL OF SPIRAL REINF. FULL LAP - WELD CONNECTION
NOT TO SCALE

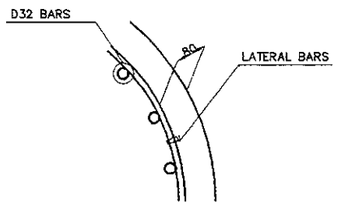

B — TYPICAL BAR LAYOUT DETAIL
NOT TO SCALE

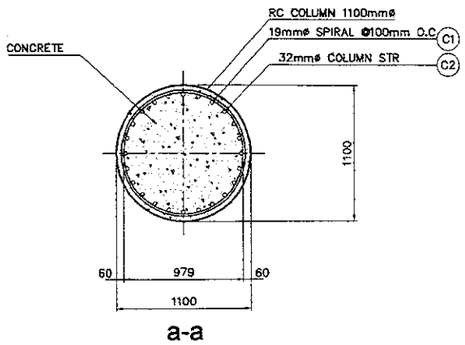

a-a

C — SECTION DETAIL
SCALE : 1:50

NOTES ON LAP–WELD CONNECTION :

1. SPIRAL REINFORCEMENT ARE LAP–WELD CONNECTED (FLARED–V–GROOVE TYPE)
2. WELDING SHOULD CONFORM TO AWS (D1.4) *STRUCTURAL WELDING CODE REINFORCED STEEL.*
3. USE ELECTRODE E80XX.
4. CARE SHOULD BE TAKEN NOT TO DAMAGE THE COLUMN MAIN DURING WELDING.

NOTES :

1. ALL DIMENSIONS ARE IN MILIMETERS.
2. CONCRETE : Fc' = 30MPa
3. REINFORCING STEEL=
   D51 : YIELD STRENGTH = 345 N/mm2
   OTHERS : YIELD STRENGTH = 390 N/mm2

JAPAN INTERNATIONAL COOPERATION AGENCY KATAHIRA & ENGINEERS INTERNATIONAL	DESIGNED BY	CHECKED BY	SUBMITTED BY	REPUBLIC OF INDONESIA MINISTRY OF PUBLIC WORKS DIRECTORATE GENERAL OF HIGHWAYS	PROJECT AND LOCATION :	SCALE :	DRAWING TITLE :	DRAWING NO :
	Name: A. GOURLEY	Name: T. OKUMURA	Name: M. KIUCHI		DETAILED DESIGN STUDY OF NORTH JAVA CORRIDOR FLYOVER PROJECT TANGGULANGIN FLYOVER - CONTRACT PACKAGE 3 (PETERONGAN -TANGGULANGIN) EAST JAVA PROVINCE	1 : 40 1 : 50	PIER COPING REINFORCEMENT P6 (EXP.) (1 OF 4)	TSB-25
	Sign	Sign	Sign	APPROVED BY: Ir. HERRY VAZA M.Eng.Sc NIP. : 110038400				SHEET NO : 25 / 45
	Date	Date	Date	Sign / Date		FULL SIZE A3		

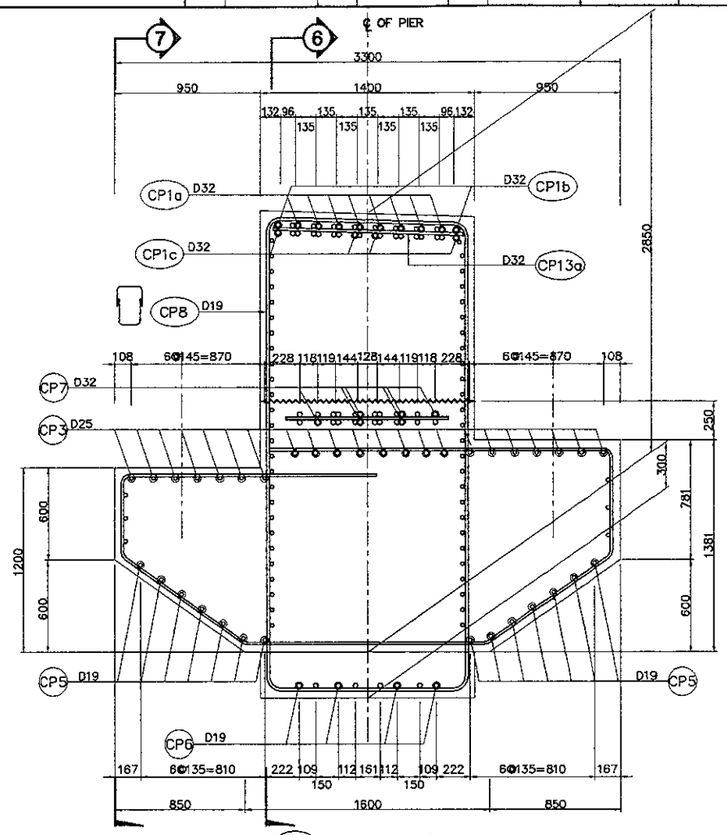

1 SECTION
SCALE 1:40

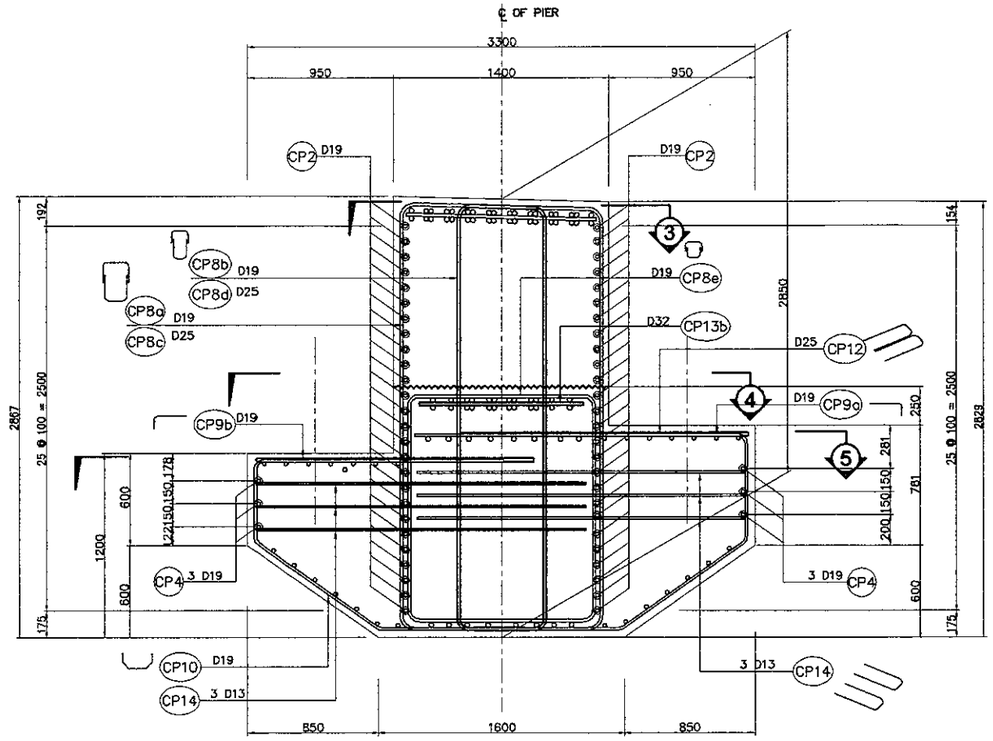

2 SECTION
SCALE 1:40

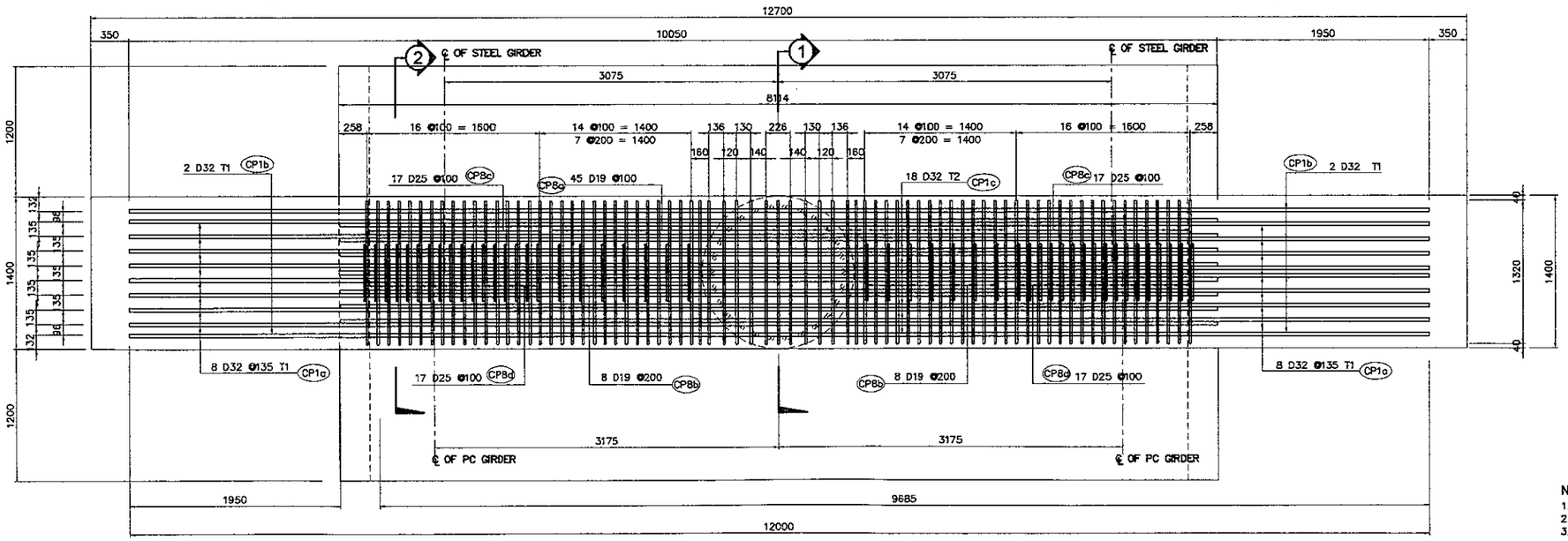

3 PLAN ON COPING TOP
SCALE 1:50

NOTES :
1. ALL DIMENSIONS ARE IN MILIMETERS.
2. CONCRETE : Fc' = 30MPa
3. REINFORCING STEEL=
   D51 : YIELD STRENGTH = 345 N/mm2
   OTHERS : YIELD STRENGTH = 390 N/mm2

PRINTED: OCT. 18, 2006

JAPAN INTERNATIONAL COOPERATION AGENCY KATAHIRA & ENGINEERS INTERNATIONAL	DESIGNED BY	CHECKED BY	SUBMITTED BY	REPUBLIC OF INDONESIA MINISTRY OF PUBLIC WORKS DIRECTORATE GENERAL OF HIGHWAYS	PROJECT AND LOCATION :	SCALE :	DRAWING TITLE :	DRAWING NO :
	Name A. GOURLEY	Name T. OKUMURA	Name M. KIUCHI		DETAILED DESIGN STUDY OF NORTH JAVA CORRIDOR FLYOVER PROJECT TANGGULANGIN FLYOVER - CONTRACT PACKAGE 3 (PETERONGAN -TANGGULANGIN) EAST JAVA PROVINCE	1 : 50	PIER COPING REINFORCEMENT P6 (EXP.) (2 OF 4)	TSB-26
	Sign	Sign	Sign	APPROVED BY Ir. HERRY VAZA M,Eng.Sc NIP. : 110038400 Sign				SHEET NO :
	Date	Date	Date	Date		FULL SIZE A3		26 / 45

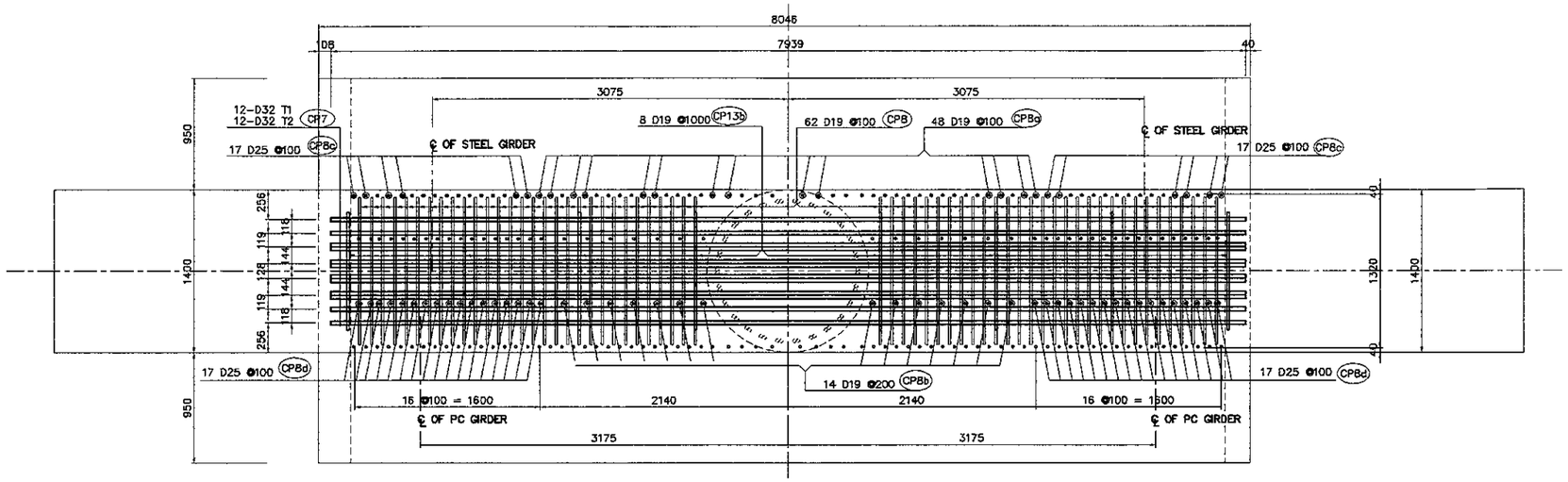

4 PLAN AT CONSTRUCTION JOINT

SCALE 1 : 50

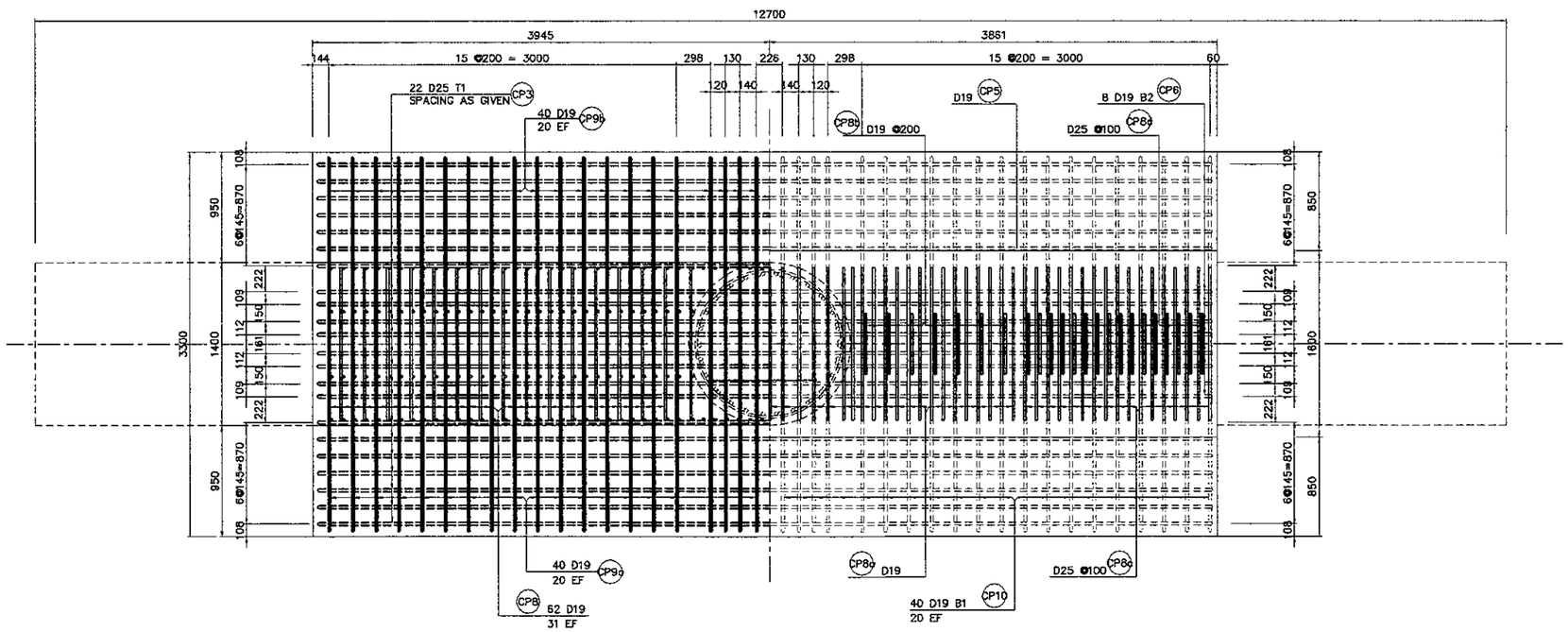

HALF SHOWING TOP

HALF SHOWING BASE

5 PLAN ON BEAM LEDGE

SCALE 1 : 50

NOTES :
1. ALL DIMENSIONS ARE IN MILIMETERS.
2. CONCRETE : Fc' = 30MPa
3. REINFORCING STEEL=
   D51 : YIELD STRENGTH = 345 N/mm2
   OTHERS : YIELD STRENGTH = 390 N/mm2

PRINTED: OCT. 18, 2006

JICA JAPAN INTERNATIONAL COOPERATION AGENCY / KEI KATAHIRA & ENGINEERS INTERNATIONAL	DESIGNED BY	CHECKED BY	SUBMITTED BY	REPUBLIC OF INDONESIA MINISTRY OF PUBLIC WORKS DIRECTORATE GENERAL OF HIGHWAYS	PROJECT AND LOCATION :	SCALE :	DRAWING TITLE :	DRAWING NO :
	Name A. GOURLEY	Name T. OKUMURA	Name M. KIUCHI		DETAILED DESIGN STUDY OF NORTH JAVA CORRIDOR FLYOVER PROJECT TANGGULANGIN FLYOVER - CONTRACT PACKAGE 3 (PETERONGAN -TANGGULANGIN) EAST JAVA PROVINCE	1 : 40 1 : 50	PIER COPING REINFORCEMENT P6 (EXP.) (3 OF 4)	TSB-27
	Sign	Sign	Sign	APPROVED BY Ir. HERRY VAZA M.Eng.Sc Sign		FULL SIZE A3		SHEET NO : 27 / 45
	Date	Date	Date	NIP. : 110038400 Date				

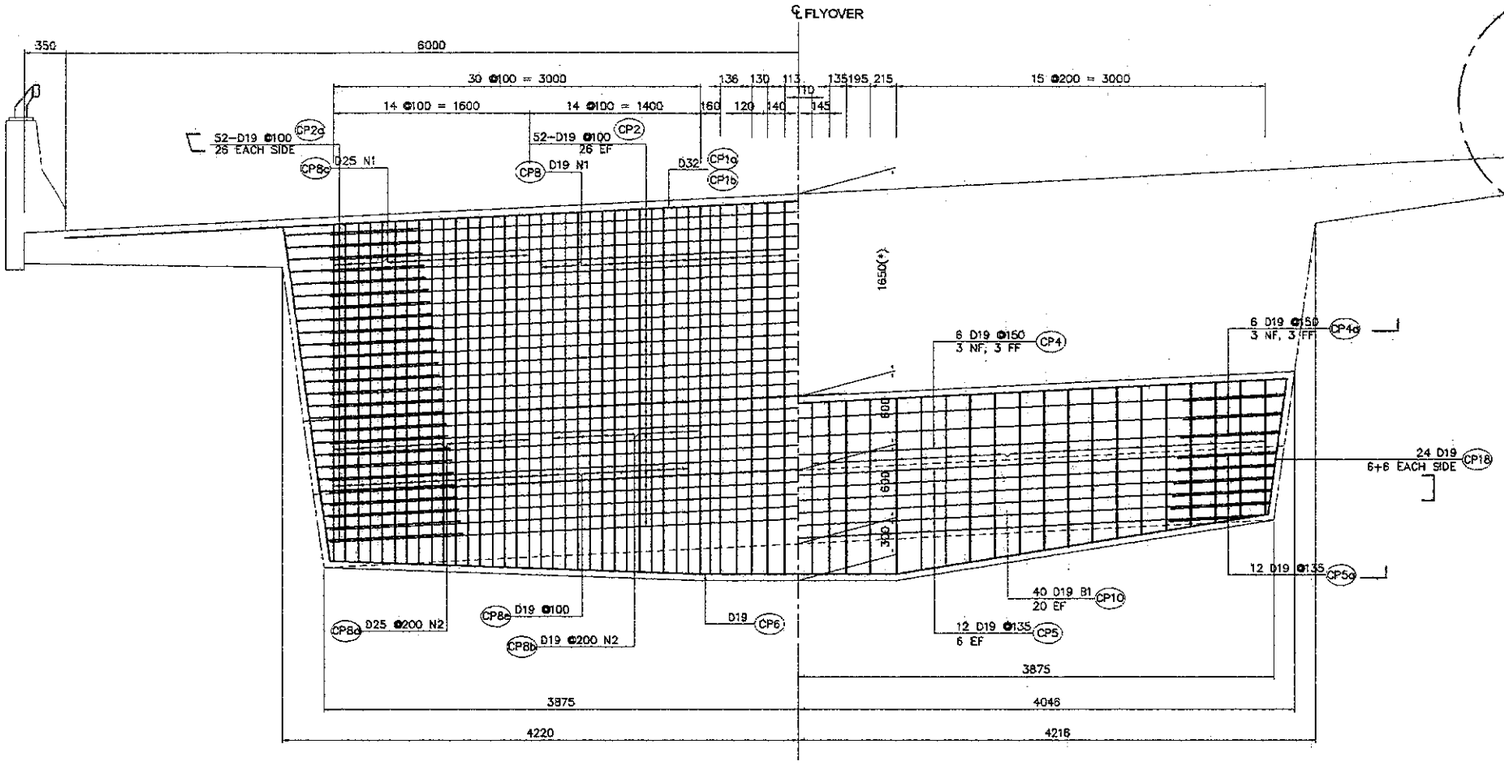

6 ELEVATION ON COPING
SCALE 1 : 50

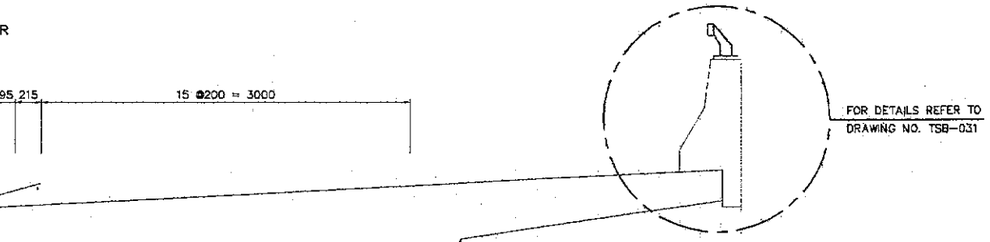

7 ELEVATION ON BEAM LEDGE
SCALE 1 : 50

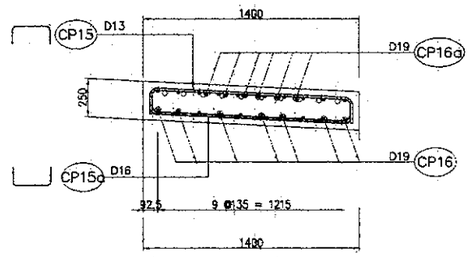

10 SECTION A-A
SCALE 1:40

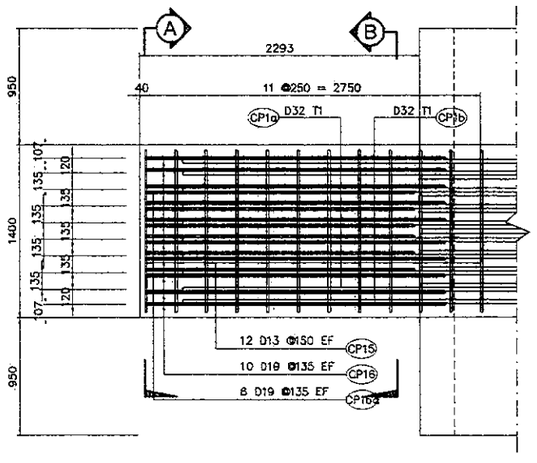

8 PLAN ON COPING CANTILEVER
SCALE 1 : 50

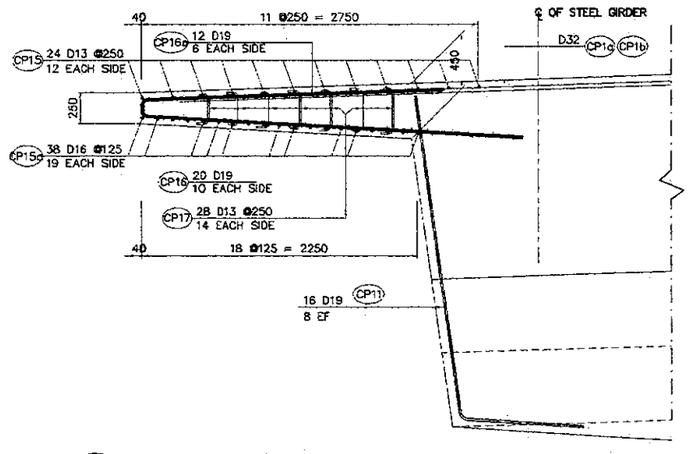

9 ELEVATION ON COPING CANTILEVER
SCALE 1 : 50

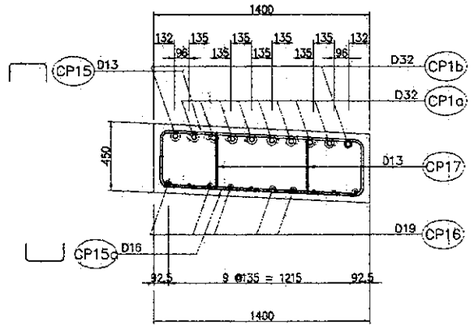

11 SECTION B-B
SCALE 1:40

NOTES :
1. ALL DIMENSIONS ARE IN MILIMETERS.
2. CONCRETE : Fc' = 30MPa
3. REINFORCING STEEL=
   D51 : YIELD STRENGTH = 345 N/mm2
   OTHERS : YIELD STRENGTH = 390 N/mm2

PRINTED: NOV. 02, 2006

JAPAN INTERNATIONAL COOPERATION AGENCY / KATAHIRA & ENGINEERS INTERNATIONAL	DESIGNED BY	CHECKED BY	SUBMITTED BY	REPUBLIC OF INDONESIA MINISTRY OF PUBLIC WORKS DIRECTORATE GENERAL OF HIGHWAYS	PROJECT AND LOCATION :	SCALE :	DRAWING TITLE :	DRAWING NO :
	Name: A. GOURLEY	Name: T. OKUMURA	Name: M. KIUCHI		DETAILED DESIGN STUDY OF NORTH JAVA CORRIDOR FLYOVER PROJECT TANGGULANGIN FLYOVER - CONTRACT PACKAGE 3 (PETERONGAN -TANGGULANGIN) EAST JAVA PROVINCE	1 : 25	PIER COPING REINFORCEMENT P6 (EXP.) (4 OF 4)	TSB-28
	Sign	Sign	Sign	APPROVED BY: Ir. HERRY VAZA M,Eng.Sc				SHEET NO :
	Date	Date	Date	NIP. : 110038400 — Sign / Date		FULL SIZE A3		28 / 45

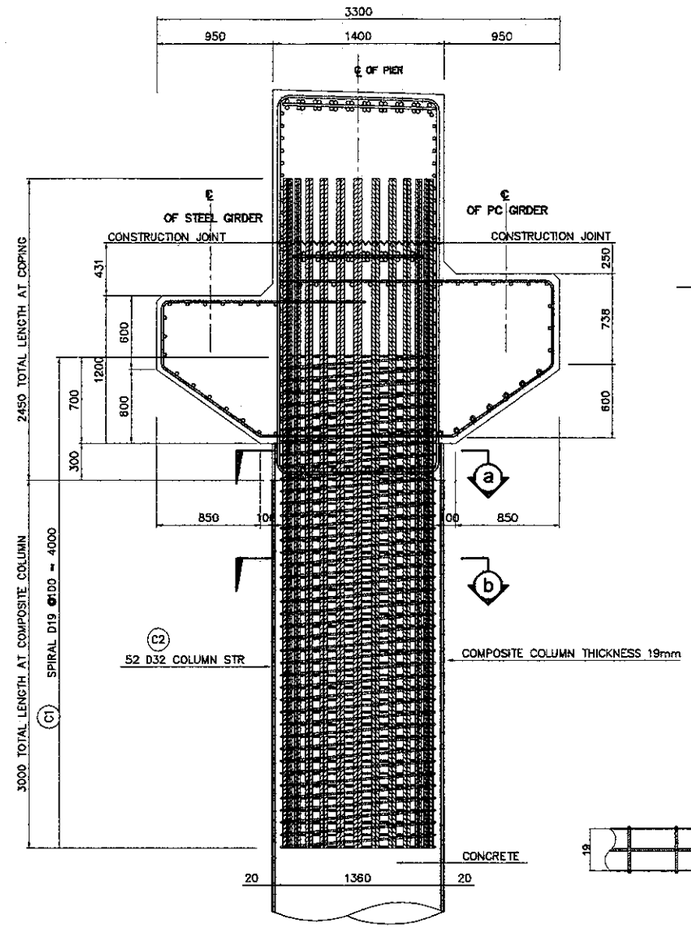

A ELEVATION
SCALE 1:50

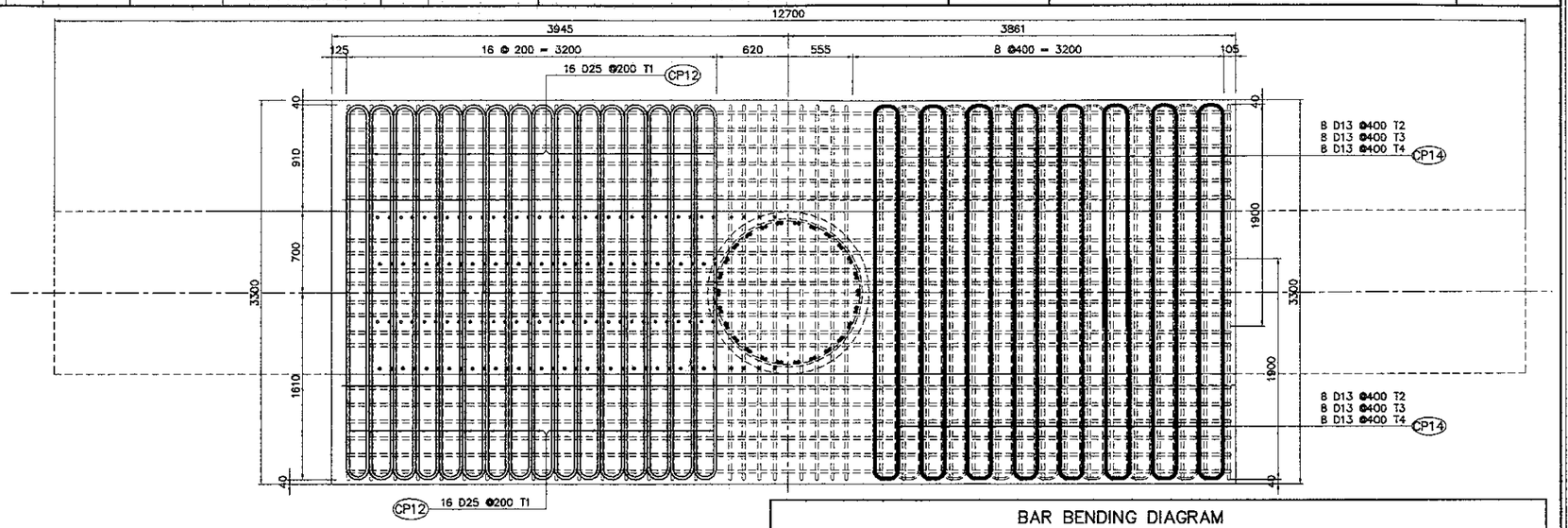

B STIRRUP PLACING
SCALE 1:50

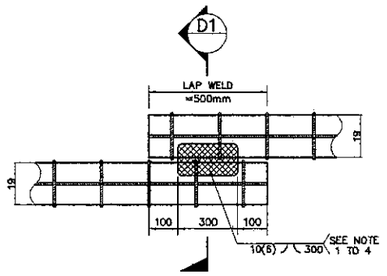

DIRECT LAP JOINT WITH IN CONTACT

D DETAIL OF SPIRAL REINF.
FULL LAP-WELD CONNECTION
NOT TO SCALE

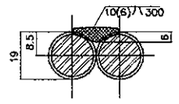

SECTION-D1
SINGLE FLARED-V-GROOVE WELD

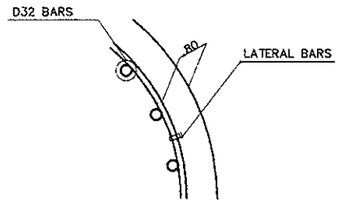

E TYPICAL BAR
LAYOUT DETAIL
NOT TO SCALE

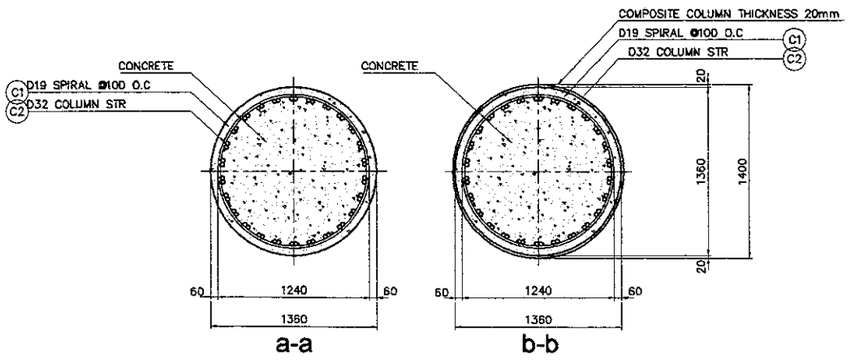

C SECTION DETAIL
SCALE 1:50

NOTES ON LAP-WELD CONNECTION :
1. SPIRAL REINFORCEMENT ARE LAP-WELD CONNECTED (FLARED-V-GROOVE TYPE)
2. WELDING SHOULD CONFORM TO AWS (D1.4) "STRUCTURAL WELDING CODE REINFORCED STEEL."
3. USE ELECTRODE E90XX.
4. CARE SHOULD BE TAKEN NOT TO DAMAGE THE COLUMN MAIN DURING WELDING.

NOTES :
1. ALL DIMENSIONS ARE IN MILIMETERS.
2. CONCRETE : Fc' = 30MPa
3. REINFORCING STEEL=
   D51 : YIELD STRENGTH = 345 N/mm2
   OTHERS : YIELD STRENGTH = 390 N/mm2

BAR BENDING DIAGRAM

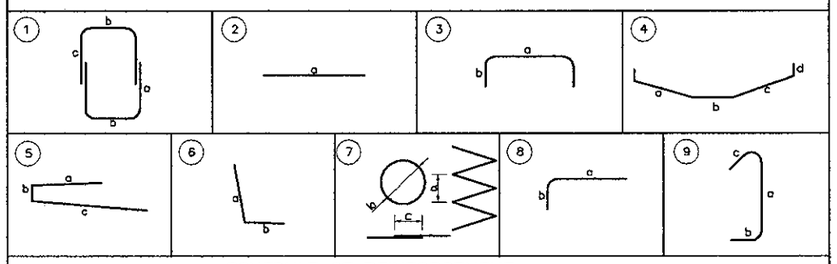

SCHEDULE OF REINFORCEMENT

LOCATION	BAR MARK	SIZE (mm)	BEND TYPE	DIMENSION (mm) OUT TO OUT a	b	c	d	e	f	LENGTH (mm)	NO. REQ'D.	UNIT WEIGHT (kg/m.)	WEIGHT (kg.)	VOLUME OF CONCRETE (m3)
COPING PIER 6	COPING													48.52
	CP1a	32	2	10050						10050	16	6.31	1015	
	CP1b	32	2	12000						12000	2	6.31	151	
	CP1c	32	2	8100						8100	18	6.31	920	
	CP2	19	2	7500						7500	52	2.23	870	
	CP2a	19	3	1280	1250					3780	52	2.23	438	
	CP3	25	2	7800						7800	22	3.85	661	
	CP4	19	2	7600						7600	6	2.23	102	
	CP4a	19	8	1580	800					2380	12	2.23	64	
	CP5	19	2	7750						7750	14	2.23	242	
	CP5a	19	8	1345	800					2145	24	2.23	115	
	CP6	19	4	3030	1695	3070				7795	8	2.23	139	
	CP7	32	2	7900						7900	24	6.31	1196	
	CP8a	19	1	2620	1320	1175				10230	45	2.23	1027	
	CP8b	19	1	2620	660	1175				8910	14	2.23	278	
	CP8c	25	1	2620	1320	1175				10230	34	3.85	1339	
	CP8d	25	1	2620	660	1175				8910	34	3.85	1168	
	CP8e	19	1	1550	1320	1175				8090	34	2.23	613	
	CP9a	19	8	2150	650					3450	40	2.23	308	
	CP9b	19	8	1665	510					2685	40	2.23	240	
	CP10	19	4	1040	1885	1040	500			4965	40	2.23	443	
	CP11	19	6	2650	1000					3650	16	2.23	130	
	CP12	25	3	200	1800					3800	64	3.85	936	
	CP13a	32	2	1280						1280	8	6.31	65	
	CP13b	32	2	1050						1050	8	6.31	53	
	CP14	13	3	200	1800					3800	96	1.04	380	
	CP15	13	3	1300	200					1700	24	1.04	42	
	CP15a	16	3	1300	350					2000	38	1.58	120	
	CP16	19	5	2200	165	3000				5365	20	2.23	240	
	CP16a	19	5	2200	165	165				2530	12	2.23	68	
	CP17	13	9	350	165	165				680	28	1.04	20	
	CP18	19	5	400	1100	400				1900	24	2.23	102	
									TOTAL WEIGHT FOR / COPING =			13,483 Kgs.	
	C1	19	7	100	1600	500				207460	1	2.23	463	
	C2	32	2	5450						5450	52	6.31	1788	
									TOTAL WEIGHT FOR / COLUMN =			2,251 Kgs.	

THE REINFORCEMENT SHOWN ON THIS TABLE IS FOR REFERENCE ONLY, THE CONTRACTOR SHOULD CHECKED AND VERIFY ALL DIMENSIONS, SIZES AND QUANTITIES OF REINFORCEMENT.

PRINTED: NOV. 02, 2006

JAPAN INTERNATIONAL COOPERATION AGENCY KATAHIRA & ENGINEERS INTERNATIONAL	DESIGNED BY	CHECKED BY	SUBMITTED BY	REPUBLIC OF INDONESIA MINISTRY OF PUBLIC WORKS DIRECTORATE GENERAL OF HIGHWAYS	PROJECT AND LOCATION :	SCALE :	DRAWING TITLE :	DRAWING NO :
	Name: A. GOURLEY	Name: T. OKUMURA	Name: M. KIUCHI		DETAILED DESIGN STUDY OF NORTH JAVA CORRIDOR FLYOVER PROJECT TANGGULANGIN FLYOVER - CONTRACT PACKAGE 3 (PETERONGAN - TANGGULANGIN) EAST JAVA PROVINCE	1 : 50	SCHEDULE OF RISER REINFORCEMENT AND ANCHOR BAR PIER P2 & P6 (1 OF 2)	TSB-029
	Sign	Sign	Sign	APPROVED BY: Ir. HERRY VAZA M,Eng.Sc NIP. : 110038400 — Sign		FULL SIZE A3		SHEET NO : 29 / 45
	Date	Date	Date	Date				

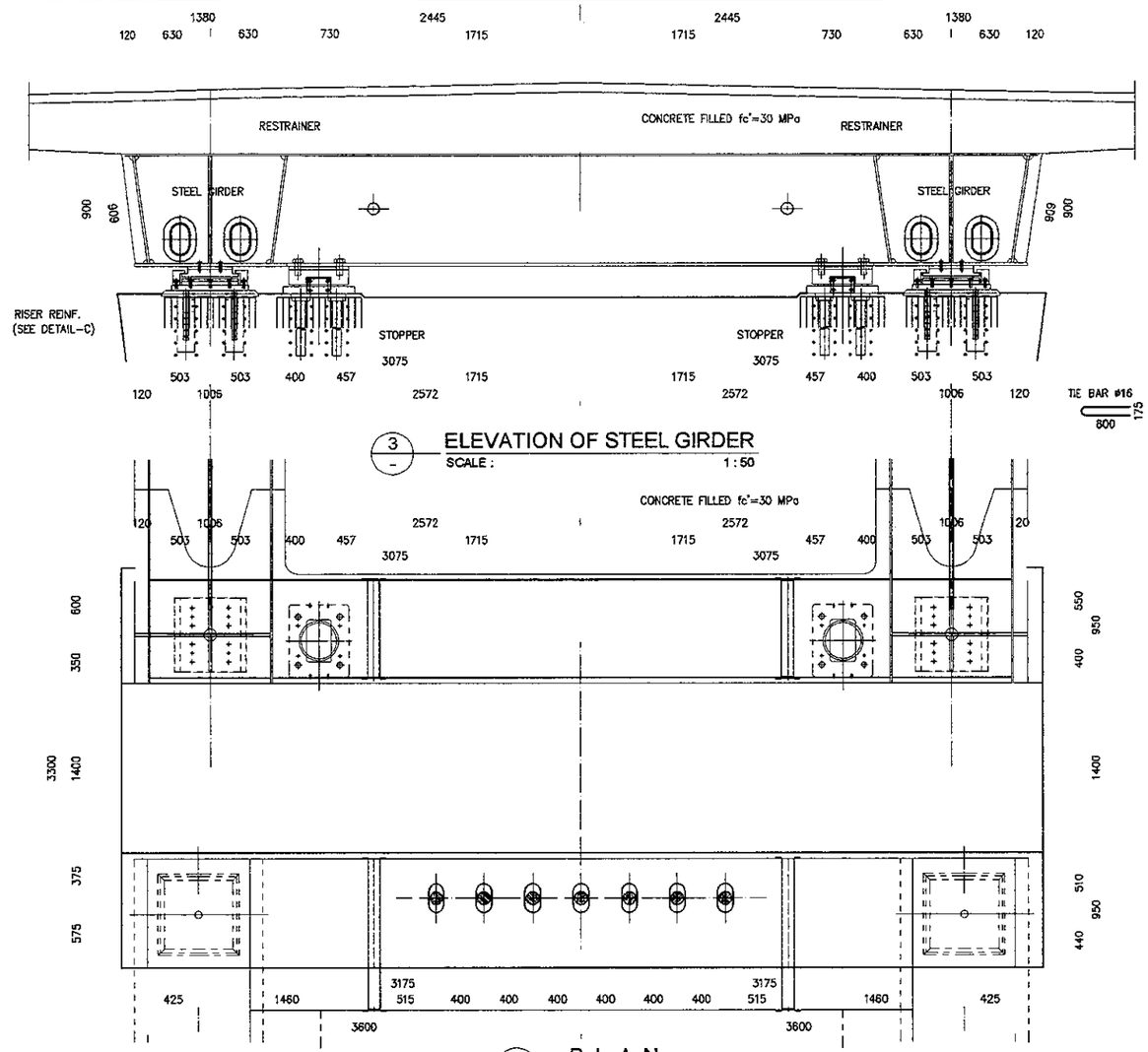

3 ELEVATION OF STEEL GIRDER
SCALE : 1 : 50

2 PLAN
SCALE : 1 : 50

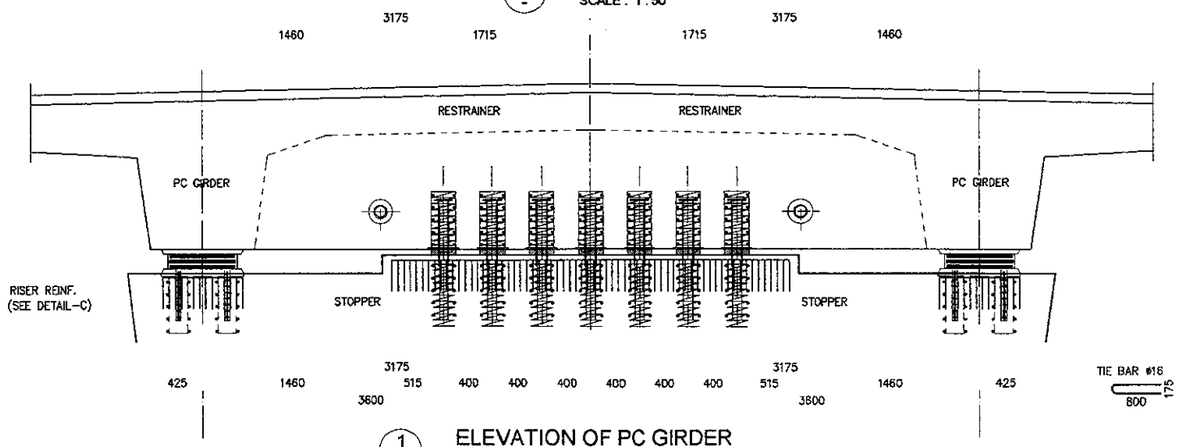

1 ELEVATION OF PC GIRDER
SCALE : 1 : 50

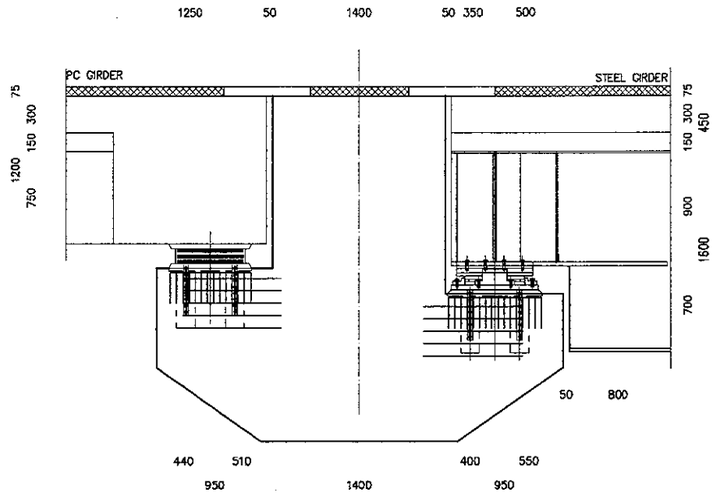

4 SECTION AT BEARING
SCALE : 1:50

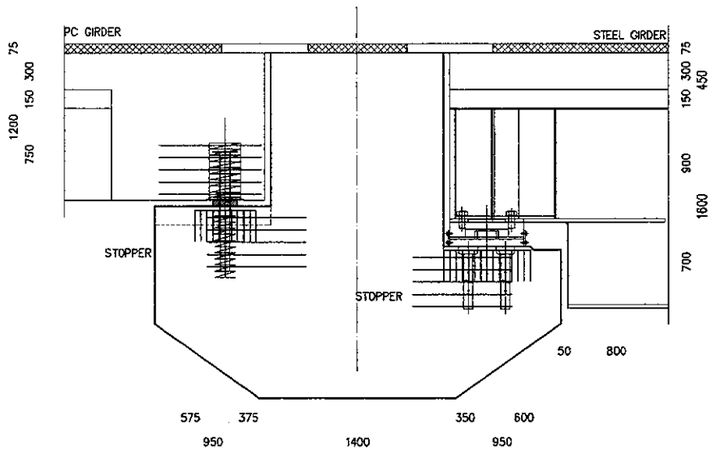

5 SECTION AT STOPER
SCALE : 1 : 50

PRINTED: OCT. 18, 2005

JAPAN INTERNATIONAL COOPERATION AGENCY KATAHIRA & ENGINEERS INTERNATIONAL	DESIGNED BY	CHECKED BY	SUBMITTED BY	REPUBLIC OF INDONESIA MINISTRY OF PUBLIC WORKS DIRECTORATE GENERAL OF HIGHWAYS	PROJECT AND LOCATION :	SCALE :	DRAWING TITLE :	DRAWING NO :
	Name: A. GOURLEY	Name: T. OKUMURA	Name: M. KIUCHI		DETAILED DESIGN STUDY OF NORTH JAVA CORRIDOR FLYOVER PROJECT TANGGULANGIN FLYOVER - CONTRACT PACKAGE 3 (PETERONGAN - TANGGULANGIN) EAST JAVA PROVINCE	1 : 10 1 : 25 1 : 40	SCHEDULE OF RISER REINFORCEMENT AND ANCHOR BAR PIER P2 & P6 (2 OF 2)	TSB-030
	Sign	Sign	Sign	APPROVED BY: Ir. HERRY VAZA M.Eng.Sc, NIP. : 110038400 — Sign / Date		FULL SIZE A3		SHEET NO : 30 / 45
	Date	Date	Date					

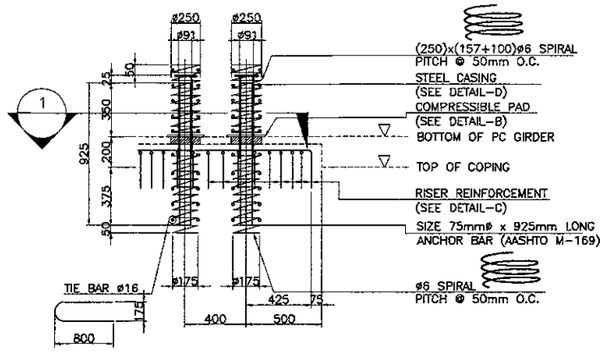

A — DOWEL BAR DETAILS
SCALE : 1:40

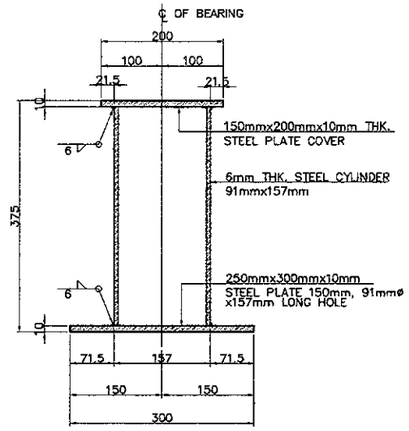

D1 — ELEVATION
SCALE : 1:10

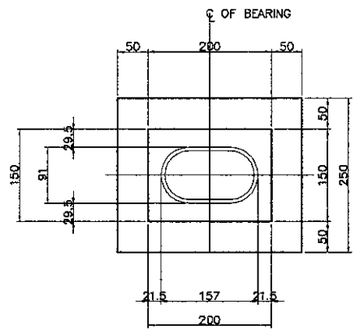

D2 — PLAN
SCALE : 1:10

D — STEEL CASING DETAILS
SCALE : 1:10

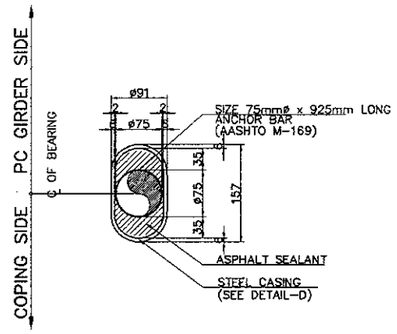

1 — SECTION
SCALE : 1:10

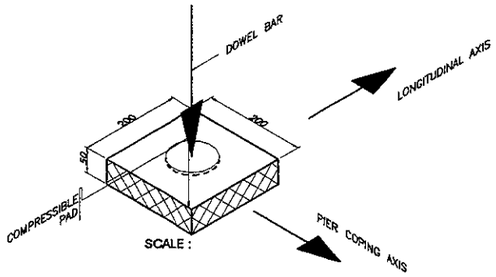

B — COMPRESSIBLE PAD FOR DOWELS
1:10

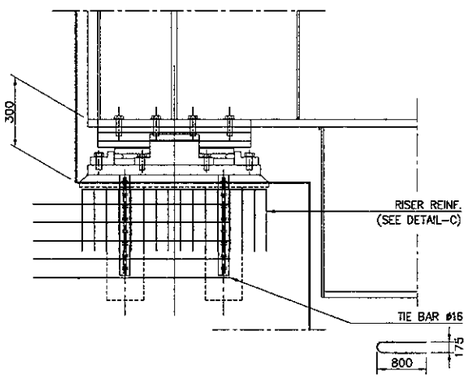

3 — DETAIL AT BEARING (STEEL)
SCALE : 1:25

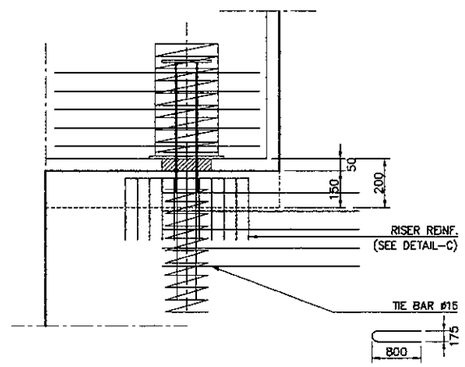

4 — DETAIL AT STOPPER (PC)
SCALE : 1:25

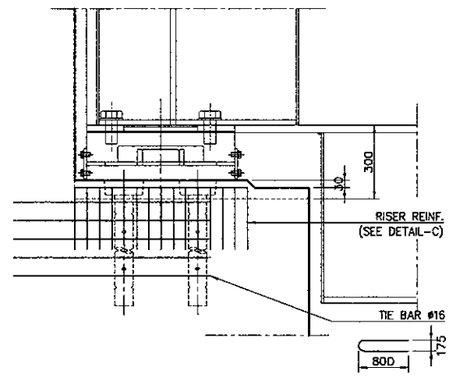

5 — DETAIL AT STOPPER (STEEL)
SCALE : 1:25

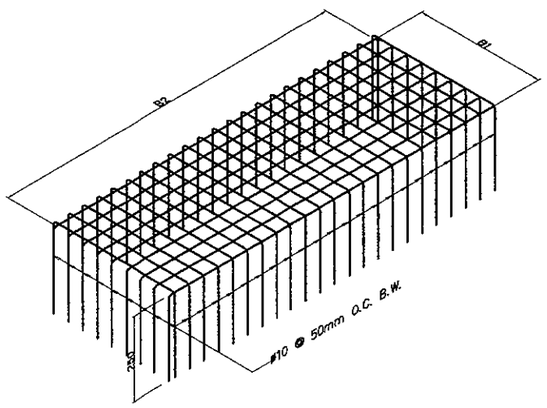

C — RISER REINFORCEMENT
NOT TO SCALE

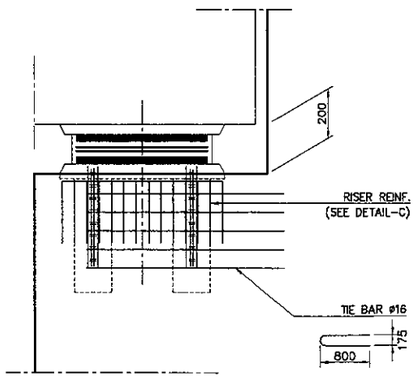

2 — DETAIL AT BEARING (PC)
SCALE : 1:25

SCHEDULE OF RISER REINFORCEMENT & TIE BAR

PIER NO.	PC CONC./ STEEL GIRDER	RISER REINFORCEMENT								TIE BAR			
		BEARING				STOPPER				BEARING		STOPPER	
		LEFT		RIGHT		LEFT		RIGHT		LEFT	RIGHT	LEFT	RIGHT
		B1 (mm)	B2 (mm)	B1 (mm)	B2 (mm)	B1 (mm)	B2 (mm)	B1 (mm)	B2 (mm)	QTY. (PCS.)	QTY. (PCS.)	QTY. (PCS.)	QTY. (PCS.)
P2	PC CONC.	650	650	650	650	500	1625	500	1625	10	10	35	35
	STEEL GIRDER	800	750	800	750	700	700	700	700	10	10	10	10
P6	PC CONC.	650	650	650	650	500	1625	500	1625	10	10	35	35
	STEEL GIRDER	800	750	800	750	700	700	700	700	10	10	10	10

NOTE:
ALL METALS SHALL BE HOT-DIPPED GALVANIZED CONFORMING TO LATEST ASTM REQUIREMENTS.