JICA JAPAN INTERNATIONAL COOPERATION AGENCY / KATAHIRA & ENGINEERS INTERNATIONAL	DESIGNED BY	CHECKED BY	SUBMITTED BY	REPUBLIC OF INDONESIA MINISTRY OF PUBLIC WORKS DIRECTORATE GENERAL OF HIGHWAYS	PROJECT AND LOCATION :	SCALE :	DRAWING TITLE :	DRAWING NO :
	Name: S. MATSUI	Name: T. OKUMURA	Name: M. KIUCHI	APPROVED BY: Ir. HERRY VAZA M,Eng.Sc NIP. : 110038400	DETAILED DESIGN STUDY OF NORTH JAVA CORRIDOR FLYOVER PROJECT TANGGULANGIN FLYOVER - CONTRACT PACKAGE 3 (PETERONGAN - TANGGULANGIN) EAST JAVA PROVINCE	1 : 60	DETAIL OF GIRDER G2 (2 OF 7)	TST-21
	Sign	Sign	Sign	Sign		FULL SIZE A3		SHEET NO : 21 / 46
	Date	Date	Date	Date				

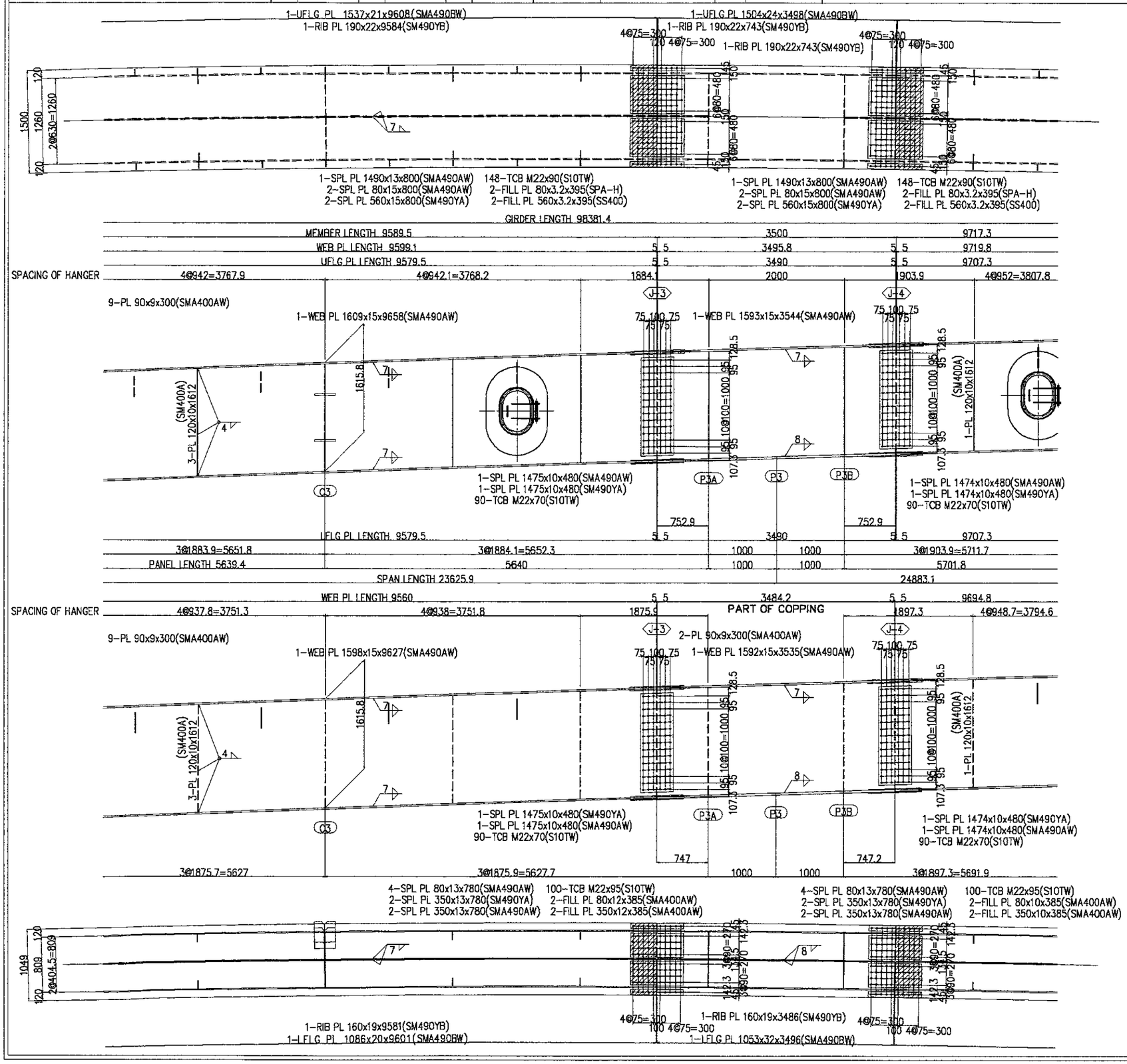

NOTES :

1. MARK "+" SHALL BE HIGH TENSION TORSION TYPE BOLT
2. ALL SCARE LOOPS SHALL BE 35 RADIUS UNLESS OTHERWISE NOTED
3. SPLICE HOLES IN FLANGE RIB PLATES SHALL BE D=26.50

JAPAN INTERNATIONAL COOPERATION AGENCY / KATAHIRA & ENGINEERS INTERNATIONAL	DESIGNED BY	CHECKED BY	SUBMITTED BY	REPUBLIC OF INDONESIA MINISTRY OF PUBLIC WORKS DIRECTORATE GENERAL OF HIGHWAYS	PROJECT AND LOCATION :	SCALE :	DRAWING TITLE :	DRAWING NO :
	Name S. MATSUI	Name T. OKUMURA	Name M. KIUCHI		DETAILED DESIGN STUDY OF NORTH JAVA CORRIDOR FLYOVER PROJECT TANGGULANGIN FLYOVER - CONTRACT PACKAGE 3 (PETERONGAN - TANGGULANGIN) EAST JAVA PROVINCE	1 : 60	DETAIL OF GIRDER G2 (3 OF 7)	TST-22
	Sign	Sign	Sign	APPROVED BY Ir. HERRY VAZA M,Eng.Sc NIP. : 110038400 Sign		FULL SIZE A3		SHEET NO : 22 / 46
	Date	Date	Date	Date				

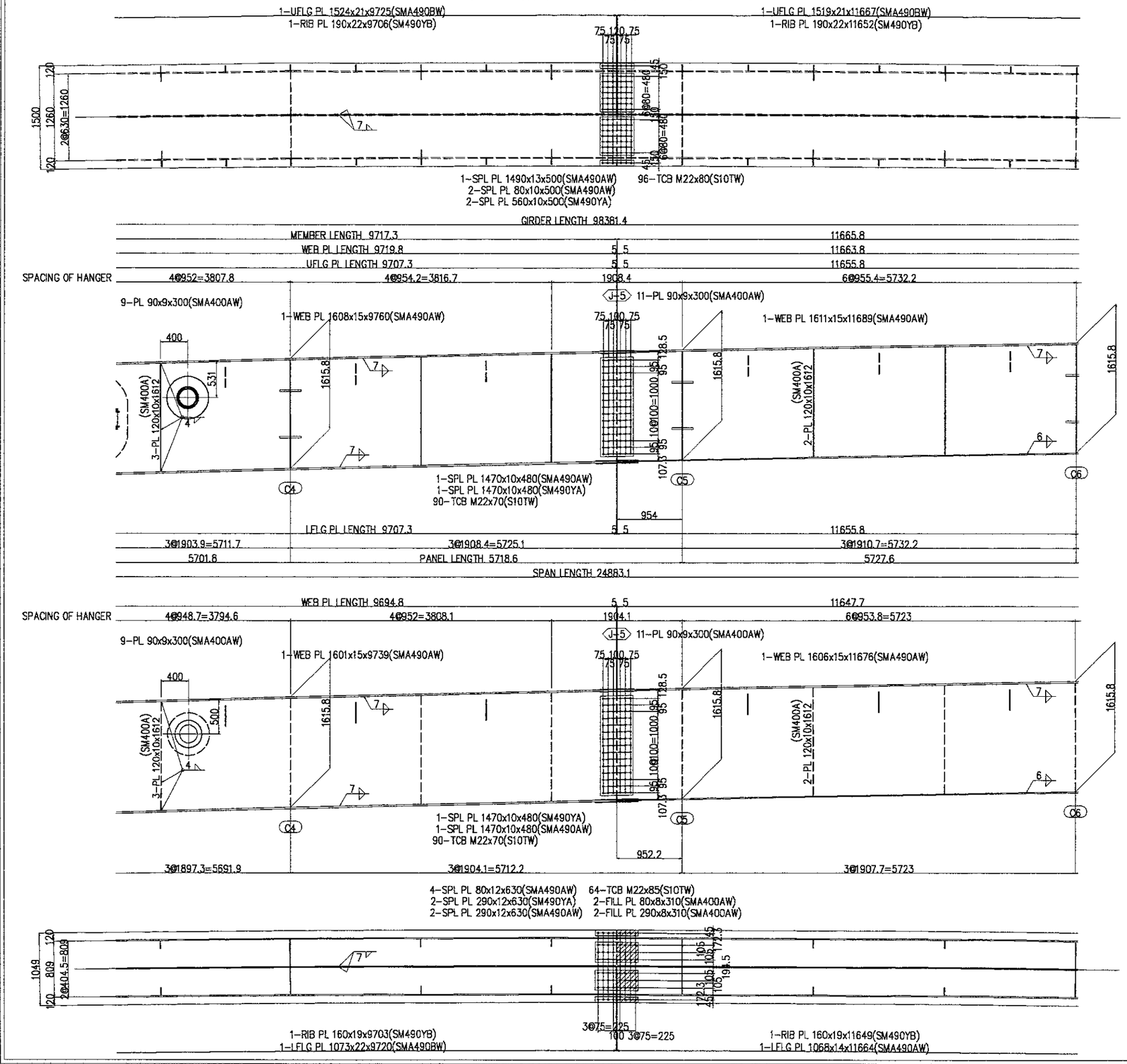

NOTES :

1. MARK "+" SHALL BE HIGH TENSION TORSION TYPE BOLT
2. ALL SCARE LOOPS SHALL BE 35 RADIUS UNLESS OTHERWISE NOTED
3. SPLICE HOLES IN FLANGE RIB PLATES SHALL BE D=26.50

JICA JAPAN INTERNATIONAL COOPERATION AGENCY	DESIGNED BY	CHECKED BY	SUBMITTED BY	REPUBLIC OF INDONESIA MINISTRY OF PUBLIC WORKS DIRECTORATE GENERAL OF HIGHWAYS	PROJECT AND LOCATION :	SCALE :	DRAWING TITLE :	DRAWING NO :
KATAHIRA & ENGINEERS INTERNATIONAL	Name S. MATSUI	Name T. OKUMURA	Name M. KIUCHI	APPROVED BY Ir. HERRY VAZA M,Eng.Sc NIP. : 110038400	DETAILED DESIGN STUDY OF NORTH JAVA CORRIDOR FLYOVER PROJECT TANGGULANGIN FLYOVER - CONTRACT PACKAGE 3 (PETERONGAN - TANGGULANGIN) EAST JAVA PROVINCE	1 : 60	DETAIL OF GIRDER G2 (4 OF 7)	TST-23
	Sign	Sign	Sign	Sign		FULL SIZE A3		SHEET NO : 23 / 46
	Date	Date	Date	Date				

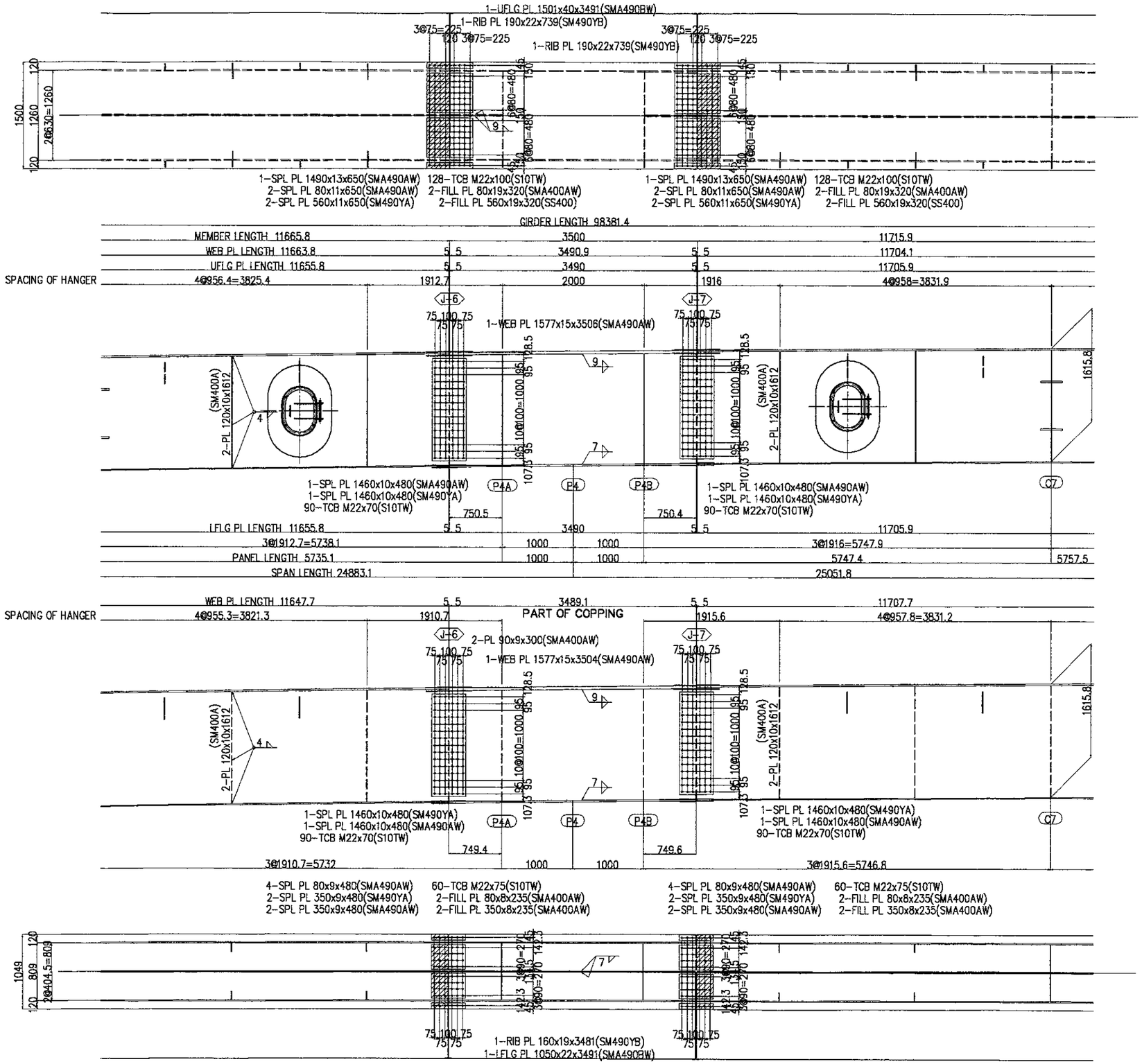

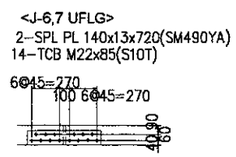

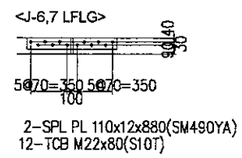

KEY PLAN

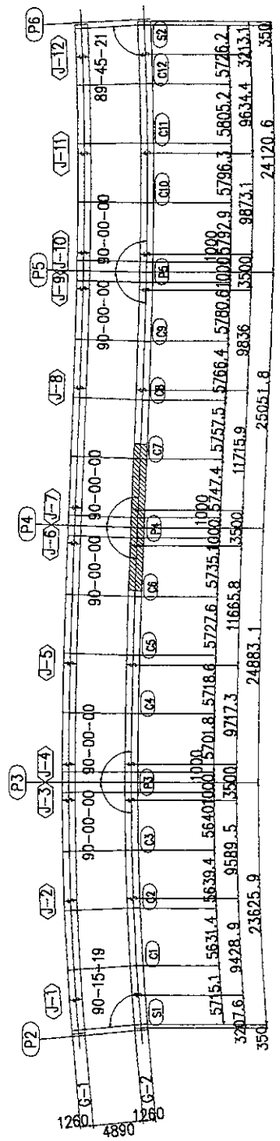

NOTES :

1. MARK "+" SHALL BE HIGH TENSION TORSION TYPE BOLT
2. ALL SCARE LOOPS SHALL BE 35 RADIUS UNLESS OTHERWISE NOTED
3. SPLICE HOLES IN FLANGE RIB PLATES SHALL BE D=26.50

JICA JAPAN INTERNATIONAL COOPERATION AGENCY	DESIGNED BY	CHECKED BY	SUBMITTED BY	REPUBLIC OF INDONESIA MINISTRY OF PUBLIC WORKS DIRECTORATE GENERAL OF HIGHWAYS	PROJECT AND LOCATION :	SCALE :	DRAWING TITLE :	DRAWING NO :
KATAHIRA & ENGINEERS INTERNATIONAL	Name: S. MATSUI	Name: T. OKUMURA	Name: M. KIUCHI	APPROVED BY: Ir. HERRY VAZA M.Eng.Sc, NIP. : 110038400	DETAILED DESIGN STUDY OF NORTH JAVA CORRIDOR FLYOVER PROJECT TANGGULANGIN FLYOVER - CONTRACT PACKAGE 3 (PETERONGAN - TANGGULANGIN) EAST JAVA PROVINCE	1 : 60	DETAIL OF GIRDER G2 (5 OF 7)	TST-24
	Sign	Sign	Sign	Sign		FULL SIZE A3		SHEET NO : 24 / 46
	Date	Date	Date	Date				

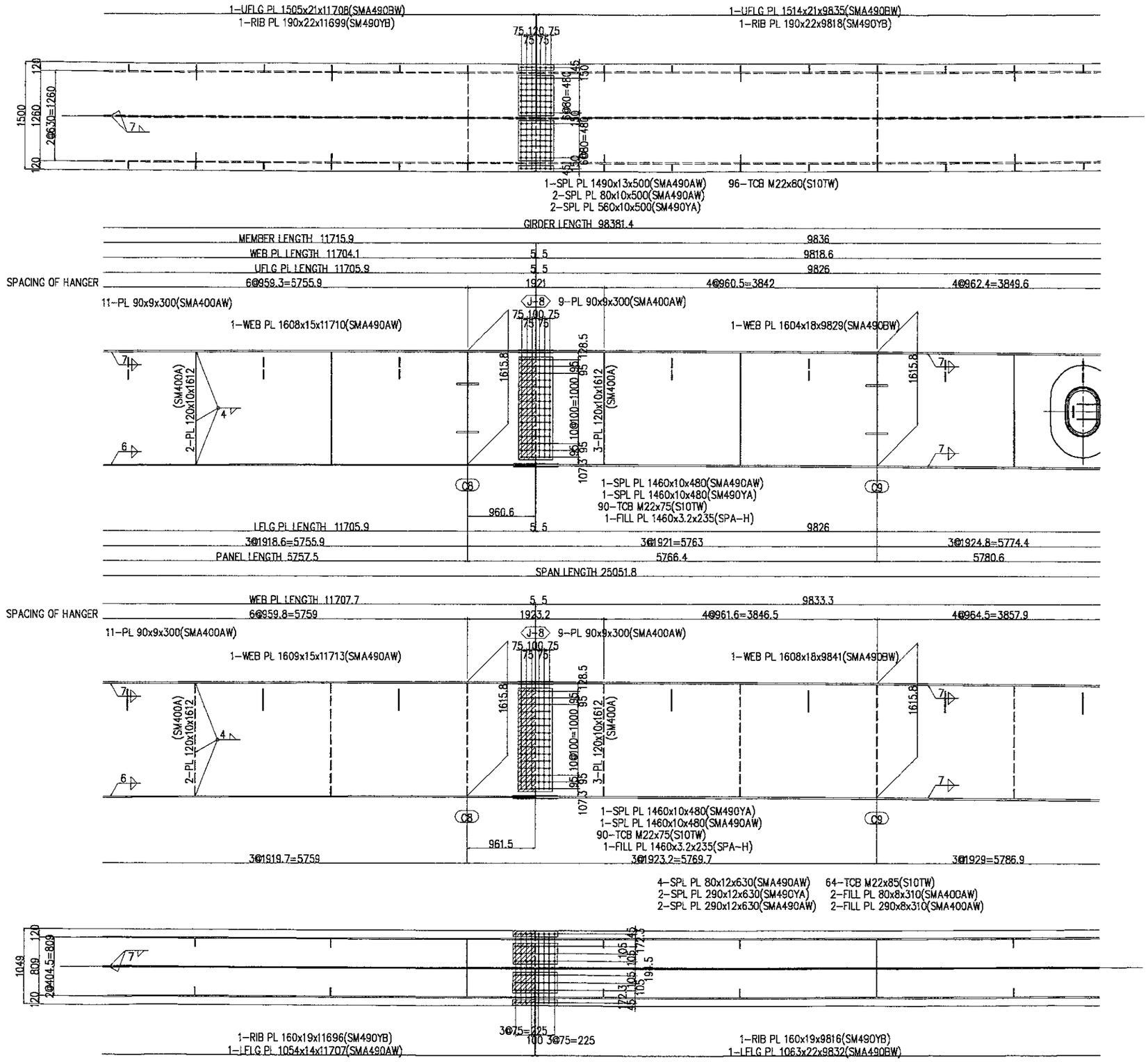

NOTES :

1. MARK "+" SHALL BE HIGH TENSION TORSION TYPE BOLT
2. ALL SCARE LOOPS SHALL BE 35 RADIUS UNLESS OTHERWISE NOTED
3. SPLICE HOLES IN FLANGE RIB PLATES SHALL BE D=26.50

JAPAN INTERNATIONAL COOPERATION AGENCY / KATAHIRA & ENGINEERS INTERNATIONAL	DESIGNED BY	CHECKED BY	SUBMITTED BY	REPUBLIC OF INDONESIA MINISTRY OF PUBLIC WORKS DIRECTORATE GENERAL OF HIGHWAYS	PROJECT AND LOCATION :	SCALE :	DRAWING TITLE :	DRAWING NO :
	Name: S. MATSUI	Name: T. OKUMURA	Name: M. KIUCHI		DETAILED DESIGN STUDY OF NORTH JAVA CORRIDOR FLYOVER PROJECT TANGGULANGIN FLYOVER - CONTRACT PACKAGE 3 (PETERONGAN - TANGGULANGIN) EAST JAVA PROVINCE	1 : 60	DETAIL OF GIRDER G2 (6 OF 7)	TST-25
	Sign	Sign	Sign	APPROVED BY: Ir. HERRY VAZA M,Eng.Sc NIP. : 110038400				SHEET NO :
	Date	Date	Date	Sign / Date		FULL SIZE A3		25 / 46

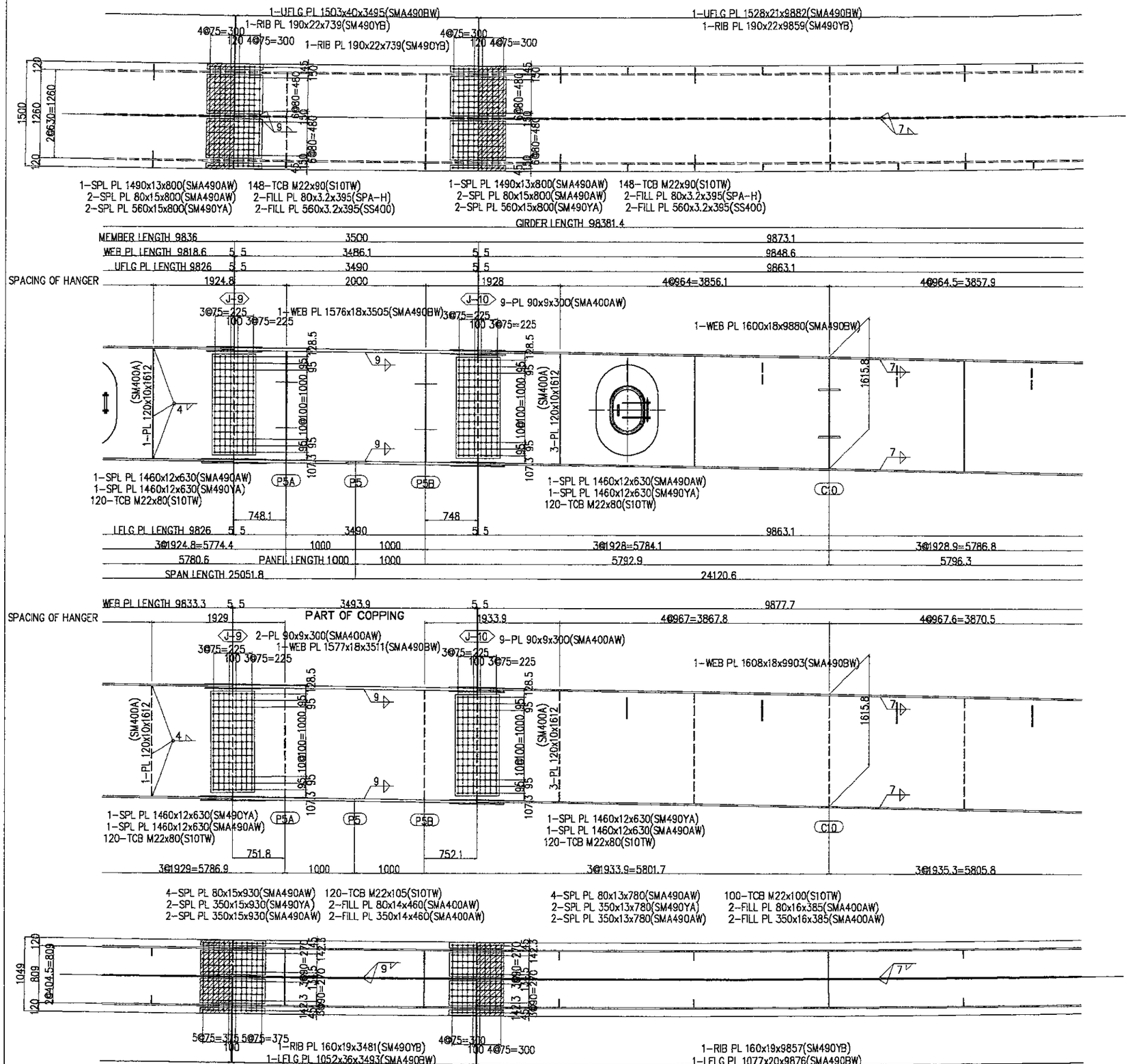

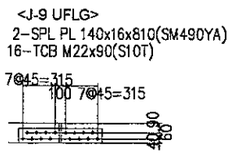

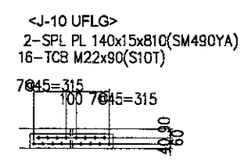

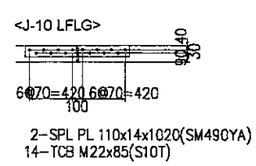

KEY PLAN

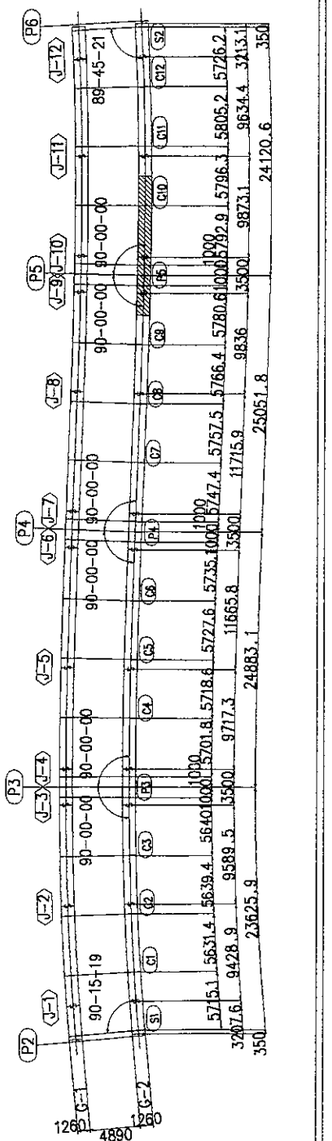

NOTES :

1. MARK "+" SHALL BE HIGH TENSION TORSION TYPE BOLT
2. ALL SCARE LOOPS SHALL BE 35 RADIUS UNLESS OTHERWISE NOTED
3. SPLICE HOLES IN FLANGE RIB PLATES SHALL BE D=26.50

JAPAN INTERNATIONAL COOPERATION AGENCY / KATAHIRA & ENGINEERS INTERNATIONAL	DESIGNED BY	CHECKED BY	SUBMITTED BY	REPUBLIC OF INDONESIA MINISTRY OF PUBLIC WORKS DIRECTORATE GENERAL OF HIGHWAYS	PROJECT AND LOCATION :	SCALE :	DRAWING TITLE :	DRAWING NO :
	Name: S. MATSUI	Name: T. OKUMURA	Name: M. KIUCHI		DETAILED DESIGN STUDY OF NORTH JAVA CORRIDOR FLYOVER PROJECT TANGGULANGIN FLYOVER - CONTRACT PACKAGE 3 (PETERONGAN - TANGGULANGIN) EAST JAVA PROVINCE	1 : 60	DETAIL OF GIRDER G2 (7 OF 7)	TST-26
	Sign	Sign	Sign	APPROVED BY: Ir. HERRY VAZA M,Eng.Sc NIP. : 110038400		FULL SIZE A3		SHEET NO : 26 / 46
	Date	Date	Date	Sign / Date				

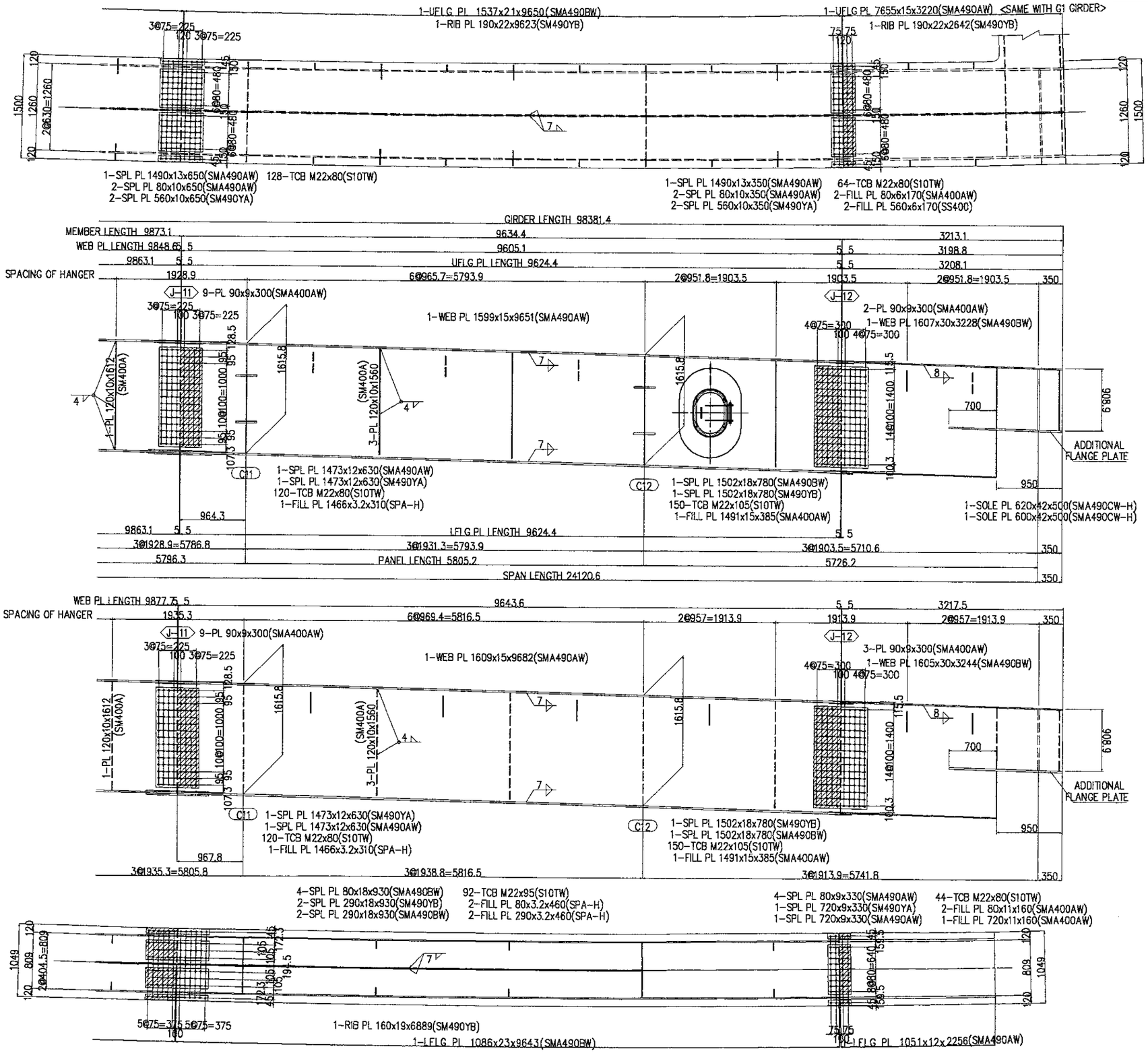

NOTES :

1. MARK "+" SHALL BE HIGH TENSION TORSION TYPE BOLT
2. ALL SCARE LOOPS SHALL BE 35 RADIUS UNLESS OTHERWISE NOTED
3. SPLICE HOLES IN FLANGE RIB PLATES SHALL BE D=26.50

JAPAN INTERNATIONAL COOPERATION AGENCY / KATAHIRA & ENGINEERS INTERNATIONAL	DESIGNED BY	CHECKED BY	SUBMITTED BY	REPUBLIC OF INDONESIA MINISTRY OF PUBLIC WORKS DIRECTORATE GENERAL OF HIGHWAYS	PROJECT AND LOCATION :	SCALE :	DRAWING TITLE :	DRAWING NO :
	Name S. MATSUI	Name T. OKUMURA	Name M. KIUCHI		DETAILED DESIGN STUDY OF NORTH JAVA CORRIDOR FLYOVER PROJECT TANGGULANGIN FLYOVER - CONTRACT PACKAGE 3 (PETERONGAN - TANGGULANGIN) EAST JAVA PROVINCE	1:20, 1:40 1:400	INTERMEDIATE CROSS BEAM AND DIAPHRAGM	TST-27
	Sign	Sign	Sign	APPROVED BY Ir. HERRY VAZA M,Eng.Sc NIP. : 110038400 Sign		FULL SIZE A3		SHEET NO : 27 / 46
	Date	Date	Date	Date				

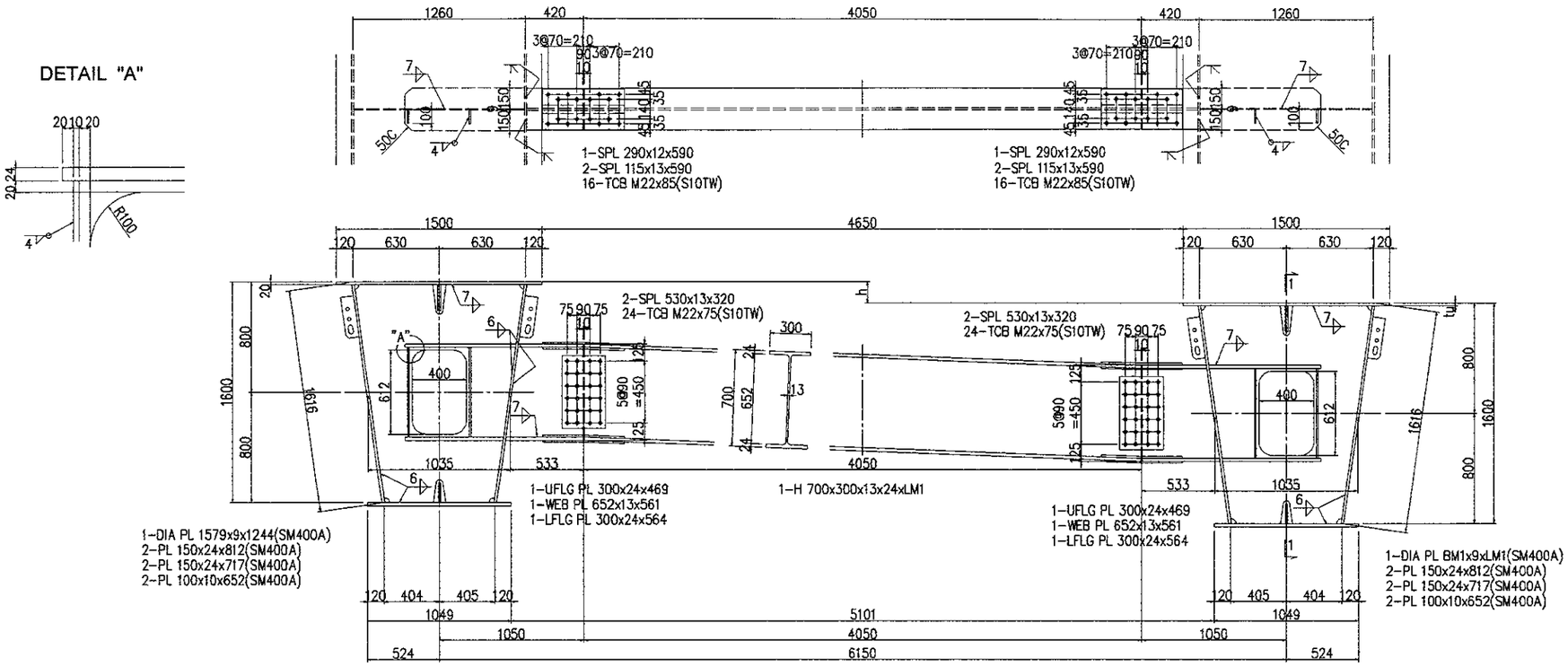

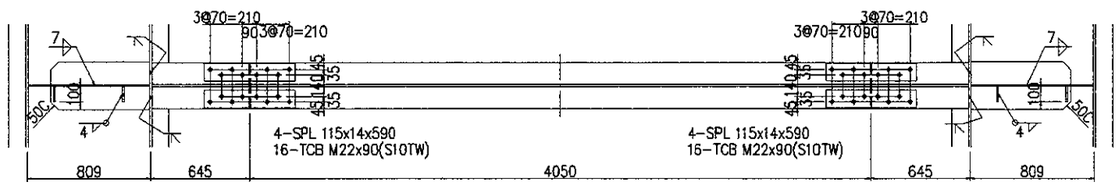

	Fl-1	Fl-2	Fl-3	Fl-4	Fl-5	Fl-6	Fl-7	Fl-8	Fl-9	Fl-10	Fl-11	Fl-12
	C1	C2	C3	C4	C5	C6	C7	C8	C9	C10	C11	C12
LM1	4093	4087	4079	4061	4054	4047	4047	4054	4061	4074	4079	4086
i	4.20	3.82	3.23	1.82	1.25	0.68	-0.67	-1.25	-1.82	-2.86	-3.28	-3.70
h	258	235	198	112	77	42	-41	-77	-112	-176	-202	-228
NO.	1	1	1	1	1	1	1	1	1	1	1	1

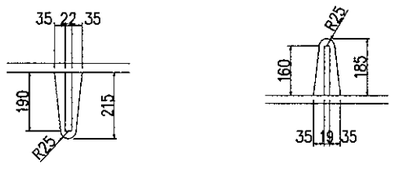

SCARE LOOPS FOR RIB PLATE
SCALE : 1:20

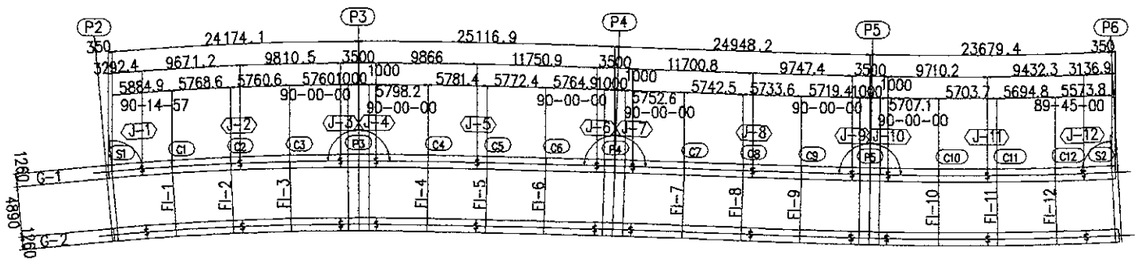

KEY PLAN
SCALE : 1:400

NOTE :

1. ALL STEEL GRADE SHALL BE SMA400AW UNLESS OTHERWISE NOTED
2. MARK "+" SHALL BE HIGH TENSION TORSION TYPE BOLT
3. ALL SCARE LOOPS SHALL BE 35 RADIUS UNLESS OTHERWISE NOTED

JICA JAPAN INTERNATIONAL COOPERATION AGENCY / KATAHIRA & ENGINEERS INTERNATIONAL	DESIGNED BY	CHECKED BY	SUBMITTED BY	REPUBLIC OF INDONESIA MINISTRY OF PUBLIC WORKS DIRECTORATE GENERAL OF HIGHWAYS	PROJECT AND LOCATION :	SCALE :	DRAWING TITLE :	DRAWING NO :
	Name: S. MATSUI	Name: T. OKUMURA	Name: M. KIUCHI		DETAILED DESIGN STUDY OF NORTH JAVA CORRIDOR FLYOVER PROJECT TANGGULANGIN FLYOVER - CONTRACT PACKAGE 3 (PETERONGAN - TANGGULANGIN) EAST JAVA PROVINCE	1:20, 1:40	END SUPPORT CROSS BEAM AND DIAPHRAGM S1<S2>	TST-28
	Sign	Sign	Sign	APPROVED BY: Ir. HERRY VAZA M,Eng.Sc NIP. : 110038400		FULL SIZE A3		SHEET NO : 28 / 46
	Date	Date	Date	Sign / Date				

ELEVATION

SECTION 1-1 / SECTION 2-2

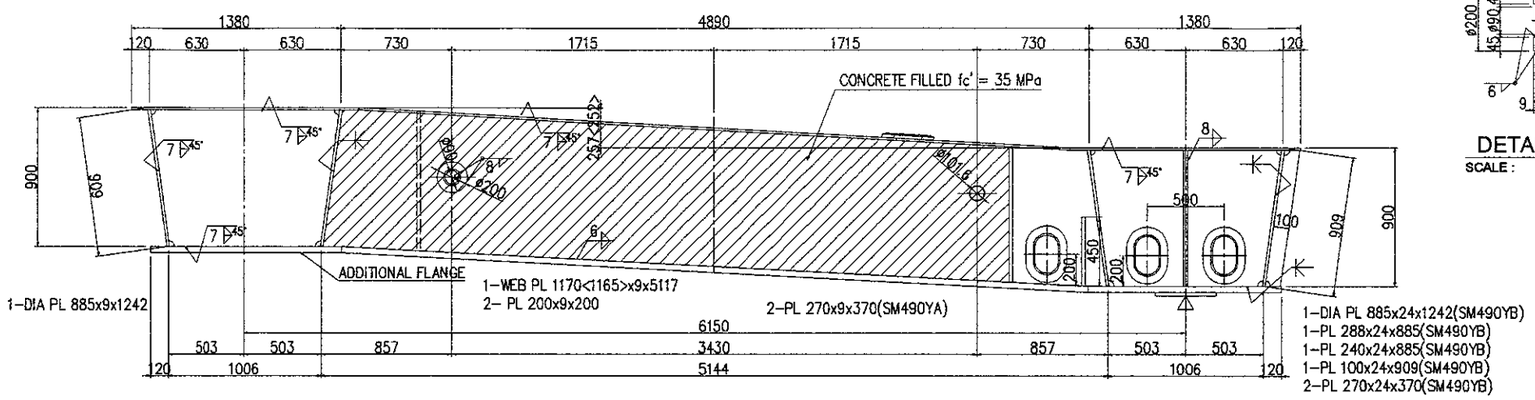

SECTION 3-3

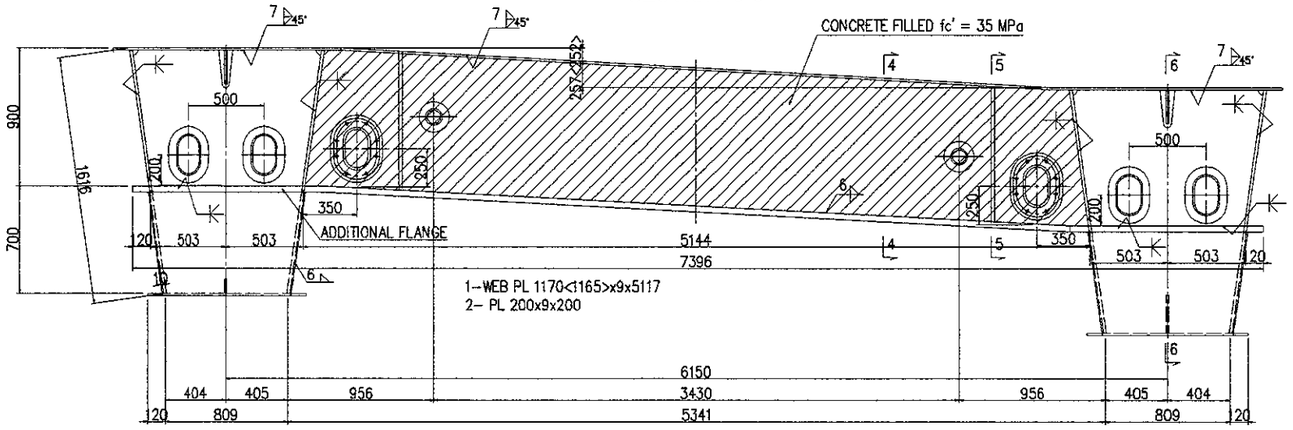

PLAN

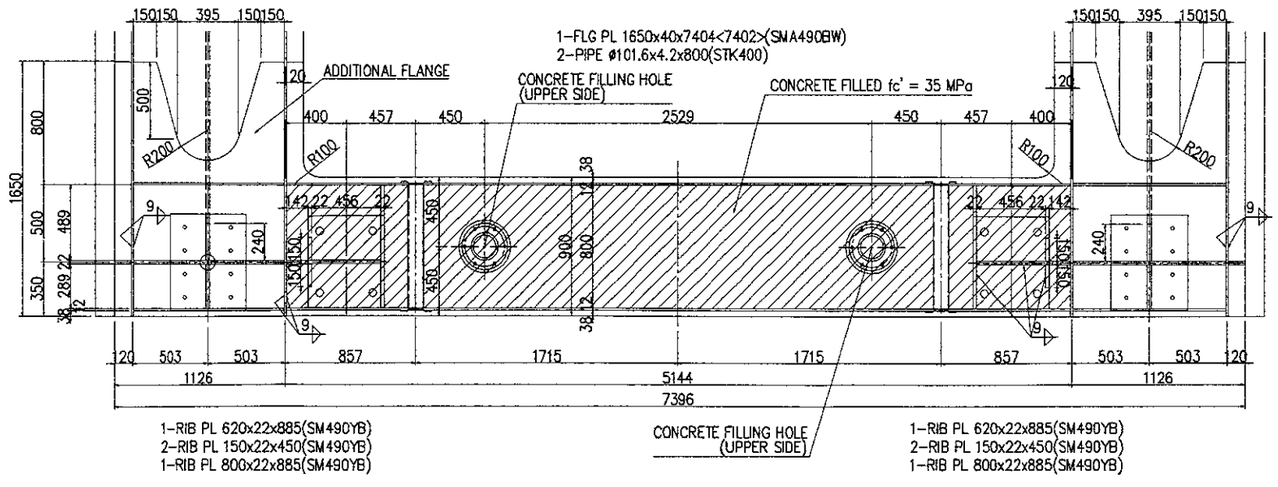

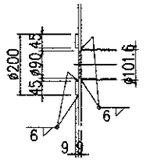

DETAIL "A"
SCALE : 1:20

SECTION 4-4

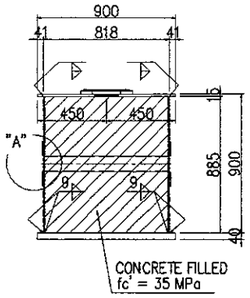

SECTION 5-5

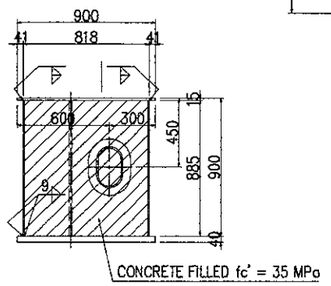

SECTION 6-6

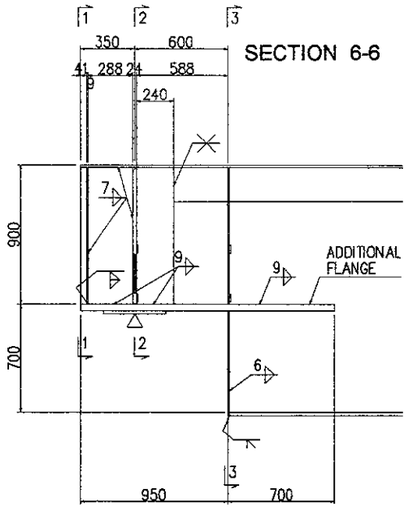

AT DIAPHRAGM

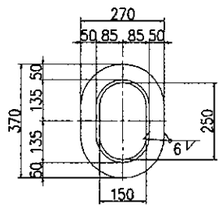

AT CROSS BEAM

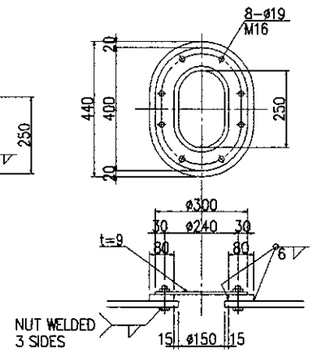

1-PL 300x9x400(SS400)
1-PL 340x9x440(SM490YA)
8-BN M16x55(SS400)

DETAIL OF MAN HOLE
SCALE : 1:20

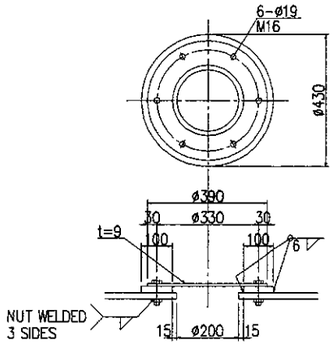

1-PL 390x9x390(SS400)
1-PL 430x14x430(SM490YA)
6-BN M16x65(SS400)

CONCRETE FILLING HOLE
SCALE : 1:20

NOTE :

1. ALL STEEL GRADE SHALL BE SM490YA UNLESS OTHERWISE NOTED
2. ALL SCARE LOOPS SHALL BE 35 RADIUS UNLESS OTHERWISE NOTED

JICA JAPAN INTERNATIONAL COOPERATION AGENCY	DESIGNED BY	CHECKED BY	SUBMITTED BY	REPUBLIC OF INDONESIA MINISTRY OF PUBLIC WORKS DIRECTORATE GENERAL OF HIGHWAYS	PROJECT AND LOCATION :	SCALE :	DRAWING TITLE :	DRAWING NO :
KATAHIRA & ENGINEERS INTERNATIONAL	Name: S. MATSUI	Name: T. OKUMURA	Name: M. KIUCHI	APPROVED BY: Ir. HERRY VAZA M.Eng.Sc, NIP. : 110038400	DETAILED DESIGN STUDY OF NORTH JAVA CORRIDOR FLYOVER PROJECT TANGGULANGIN FLYOVER - CONTRACT PACKAGE 3 (PETERONGAN - TANGGULANGIN) EAST JAVA PROVINCE	NOT TO SCALE	DEAD LOAD CAMBER DIAGRAM	TST-29
	Sign	Sign	Sign	Sign				SHEET NO :
	Date	Date	Date	Date		FULL SIZE A3		29 / 46

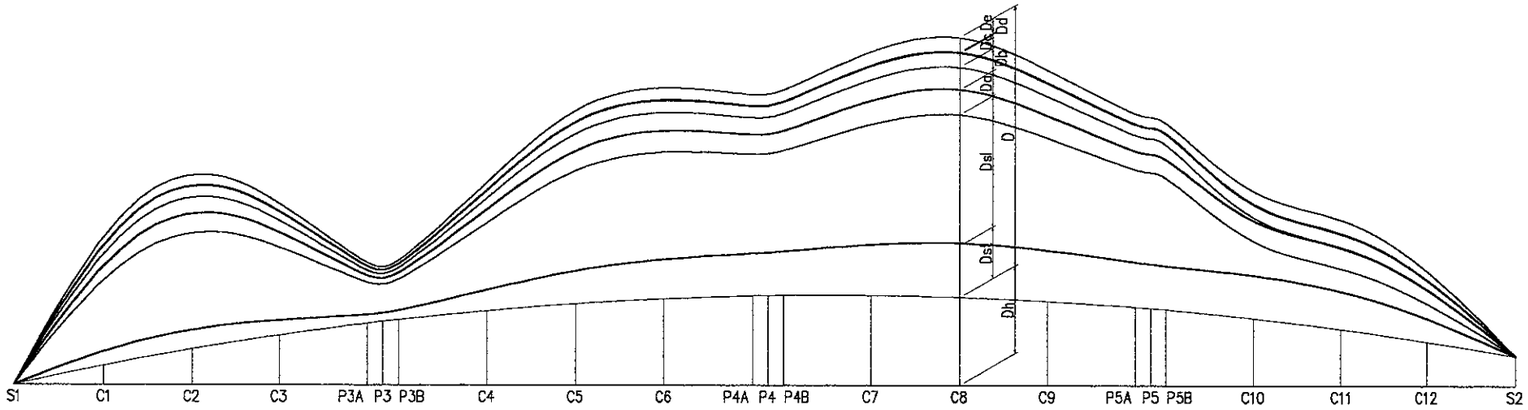

		S1	C1	C2	C3	P3A	P3	P3B	C4	C5	C6	P4A	P4	P4B	C7	C8	C9	P5A	P5	P5B	C10	C11	C12	S2
GIRDER G1	Dh	0.0	255.4	468.9	648.9	802.6	826.6	849.8	968.7	1061.0	1126.3	1164.4	1167.9	1171.4	1173.1	1147.8	1095.4	1019.3	1003.1	986.8	876.8	740.2	576.9	384.0
	Dst	0.0	1.9	2.6	2.0	1.3	1.3	1.5	3.2	5.2	6.4	6.7	6.8	6.8	7.0	6.2	4.3	2.7	2.6	2.5	2.8	3.2	2.3	0.0
	Dsl	0.0	9.4	12.0	8.3	3.7	3.6	3.7	9.1	15.0	16.5	15.5	15.6	15.6	16.9	15.3	9.8	5.6	5.6	5.6	9.3	13.0	10.2	0.0
	Da	0.0	1.8	2.3	1.6	0.7	0.7	0.7	1.7	2.9	3.2	3.0	3.0	3.1	3.3	3.0	1.9	1.1	1.1	1.1	1.8	2.5	2.0	0.0
	Db	0.0	1.6	2.1	1.5	0.7	0.6	0.7	1.6	2.6	2.9	2.7	2.7	2.7	2.9	2.6	1.7	1.0	1.0	1.0	1.6	2.2	1.7	0.0
	Dc	0.0	1.0	1.2	0.9	0.4	0.3	0.4	0.9	1.6	1.7	1.7	1.7	1.7	1.8	1.6	1.0	0.6	0.6	0.6	1.0	1.4	1.1	0.0
	Dd	0.0	0.1	0.1	0.1	0.0	0.0	0.0	0.1	0.1	0.1	0.1	0.1	0.1	0.1	0.1	0.1	0.0	0.0	0.0	0.1	0.1	0.1	0.0
	De	0.0	1.1	1.4	1.0	0.4	0.4	0.5	1.1	1.7	1.9	1.8	1.8	1.8	1.9	1.8	1.1	0.6	0.6	0.6	1.1	1.5	1.2	0.0
	D	0.0	16.9	21.8	15.3	7.2	7.0	7.4	17.7	29.2	32.8	31.5	31.7	31.8	34.0	30.6	19.8	11.7	11.6	11.5	17.7	23.9	18.6	0.0

		S1	C1	C2	C3	P3A	P3	P3B	C4	C5	C6	P4A	P4	P4B	C7	C8	C9	P5A	P5	P5B	C10	C11	C12	S2
GIRDER G2	Dh	0.0	254.1	490.7	707.5	897.5	928.4	958.4	1113.5	1241.1	1341.7	1415.3	1424.9	1434.5	1471.6	1481.7	1464.6	1417.2	1405.7	1394.1	1309.6	1198.6	1061.1	893.4
	Dst	0.0	2.1	2.7	1.9	1.0	1.1	1.2	2.7	4.4	5.2	5.5	5.6	5.7	6.7	7.2	6.7	5.8	5.7	5.7	5.6	5.1	3.3	0.0
	Dsl	0.0	10.7	13.7	9.4	4.0	3.7	3.8	8.6	13.6	14.1	12.8	12.9	13.0	15.8	17.3	14.6	11.9	11.9	12.0	14.7	16.3	11.5	0.0
	Da	0.0	2.1	2.7	1.9	0.8	0.8	0.8	1.7	2.7	2.8	2.5	2.5	2.5	3.1	3.4	2.9	2.3	2.3	2.3	2.9	3.2	2.2	0.0
	Db	0.0	1.8	2.3	1.6	0.6	0.6	0.6	1.4	2.3	2.4	2.2	2.2	2.2	2.7	3.0	2.5	2.1	2.1	2.1	2.6	2.8	2.0	0.0
	Dc	0.0	1.2	1.5	1.0	0.5	0.4	0.4	0.9	1.5	1.5	1.4	1.4	1.4	1.7	1.8	1.6	1.3	1.3	1.3	1.6	1.7	1.2	0.0
	Dd	0.0	0.1	0.1	0.1	0.0	0.0	0.0	0.1	0.1	0.1	0.1	0.1	0.1	0.1	0.2	0.1	0.1	0.1	0.1	0.1	0.1	0.1	0.0
	De	0.0	1.2	1.5	1.1	0.4	0.4	0.4	1.0	1.5	1.6	1.5	1.5	1.5	1.8	2.0	1.7	1.4	1.4	1.4	1.7	1.9	1.3	0.0
	D	0.0	19.1	24.5	16.9	7.4	7.0	7.3	16.4	26.1	27.8	25.9	26.1	26.4	32.0	34.8	30.0	24.9	24.8	24.8	29.2	31.2	21.6	0.0

DEAD LOAD CAMBER DIAGRAM OF GIRDER
NOT TO SCALE

Dh : DEFLECTION DUE TO VERTICAL ALIGNEMENT
Dst : DEFLECTION DUE TO STEEL WEIGTH
Dsl : DEFLECTION DUE TO DECK SLAB
Da : DEFLECTION DUE TO RAILLING AND MEDIAN
Db : DEFLECTION DUE TO PAVEMENT
Dc : DEFLECTION DUE TO OUTER GUTTER AND MEDIAN
Dd : DEFLECTION DUE TO FALLING FENCE FOR RAILLING
De : DEFLECTION DUE TO FUTURE OVERLAY
D : TOTAL DEFLECTION

NOTES :
ALL UNIT IN MILLIMETERS

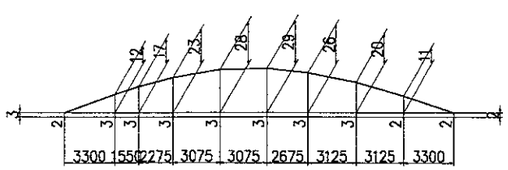

DEAD LOAD CAMBER DIAGRAM OF GIRDER P4
NOT TO SCALE

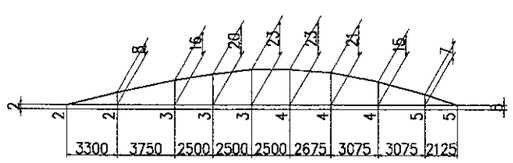

DEAD LOAD CAMBER DIAGRAM OF GIRDER P5
NOT TO SCALE

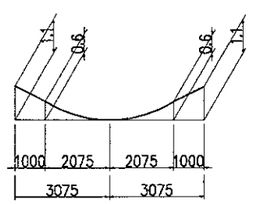

DEAD LOAD CAMBER DIAGRAM OF GIRDER OF P3
NOT TO SCALE

JICA JAPAN INTERNATIONAL COOPERATION AGENCY	DESIGNED BY	CHECKED BY	SUBMITTED BY	REPUBLIC OF INDONESIA MINISTRY OF PUBLIC WORKS DIRECTORATE GENERAL OF HIGHWAYS	PROJECT AND LOCATION :	SCALE :	DRAWING TITLE :	DRAWING NO :
KEI KATAHIRA & ENGINEERS INTERNATIONAL	Name S. MATSUI	Name T.OKUMURA	Name M. KIUCHI	APPROVED BY Ir. HERRY VAZA M,Eng.Sc NIP. : 110038400	DETAILED DESIGN STUDY OF NORTH JAVA CORRIDOR FLYOVER PROJECT TANGGULANGIN FLYOVER - CONTRACT PACKAGE 3 (PETERONGAN - TANGGULANGIN) EAST JAVA PROVINCE	1 : 40 1 : 1000 FULL SIZE A3	DETAIL OF GIRDER P3 (1 OF 2)	TST-30
	Sign	Sign	Sign	Sign				SHEET NO : 30 / 46
	Date	Date	Date	Date				

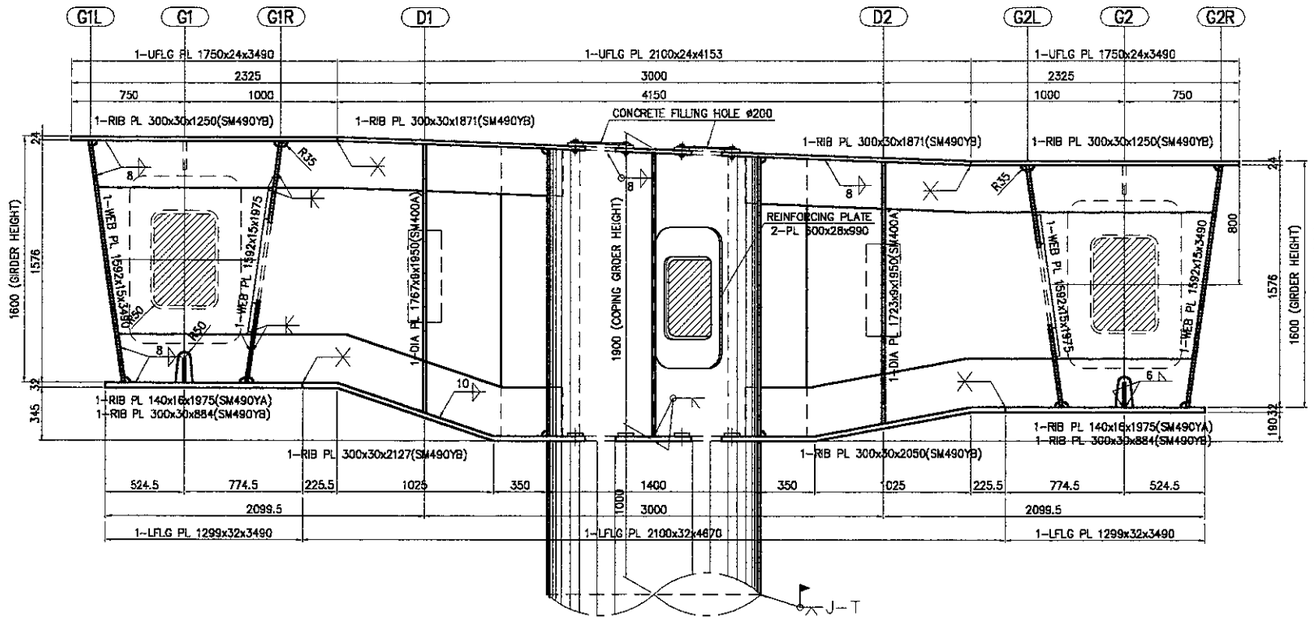

SECTION F-F
SCALE : 1:40

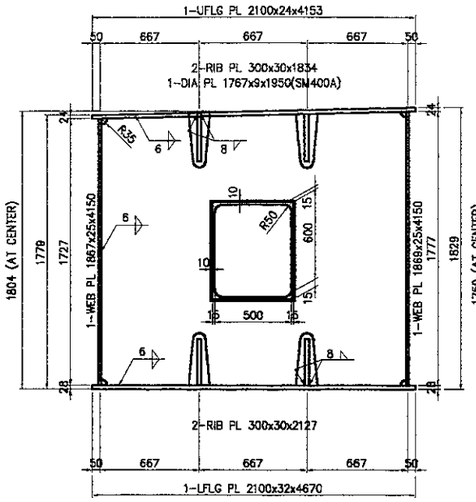

SECTION B-B
SCALE : 1:40

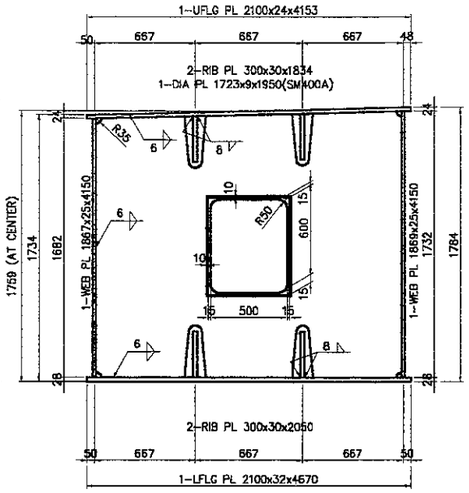

SECTION D-D
SCALE : 1:40

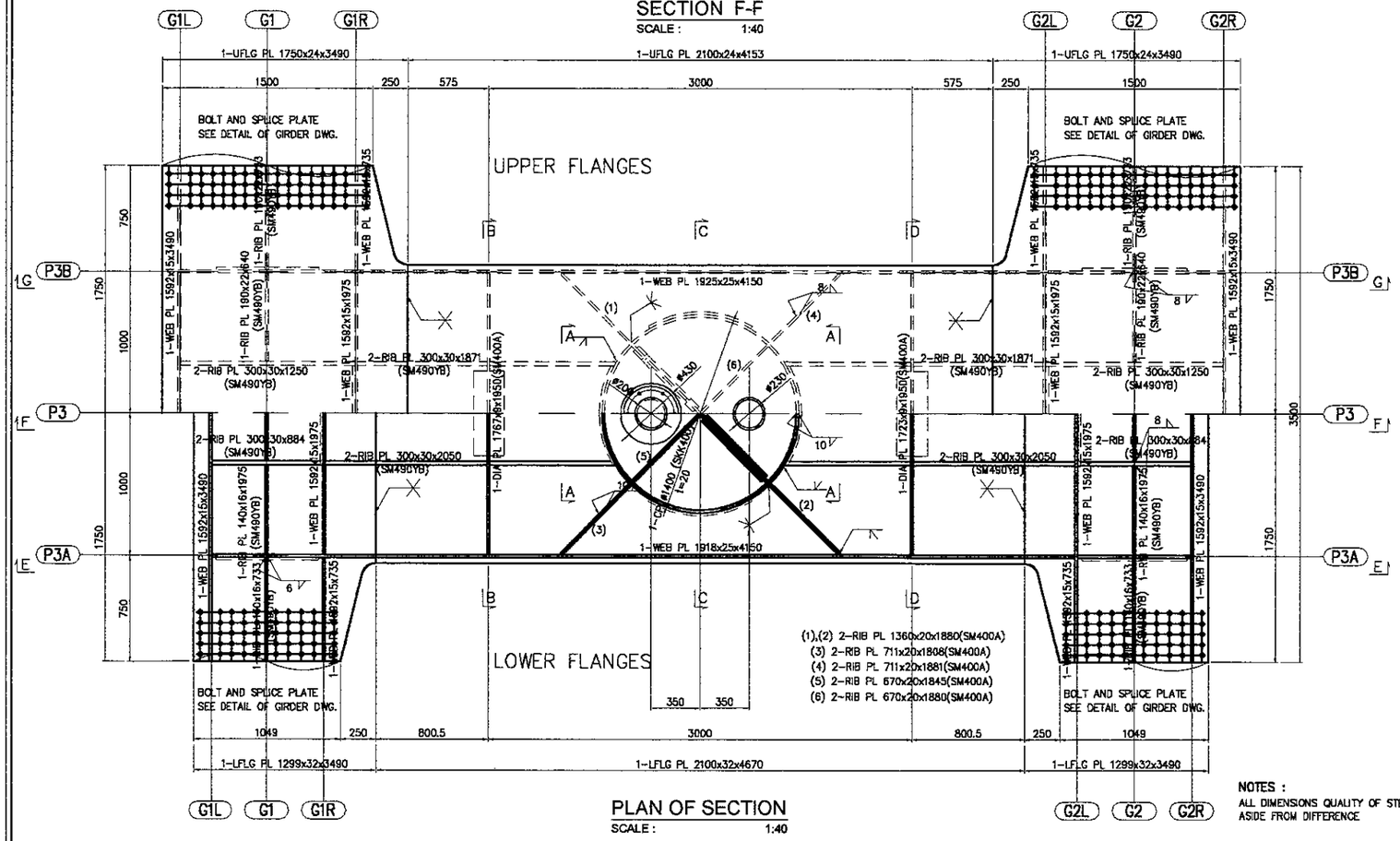

PLAN OF SECTION
SCALE : 1:40

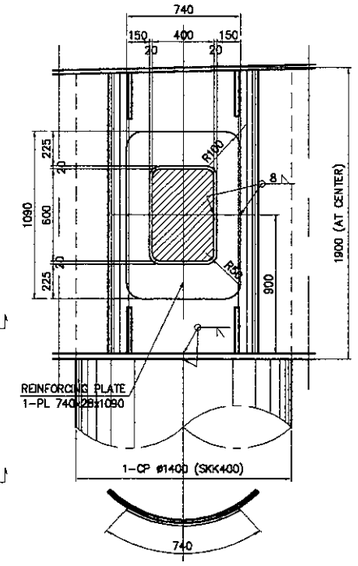

SECTION A-A
SCALE : 1:40

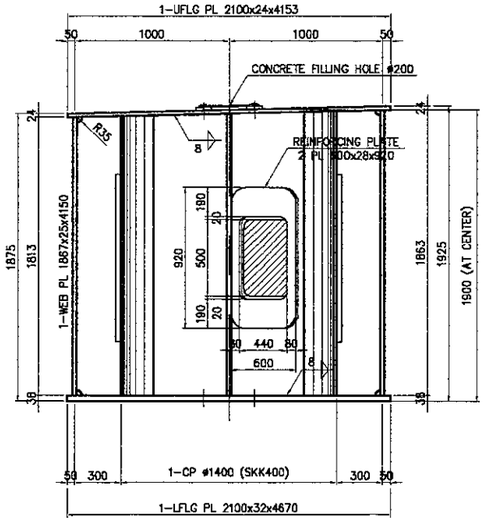

SECTION C-C
SCALE : 1:40

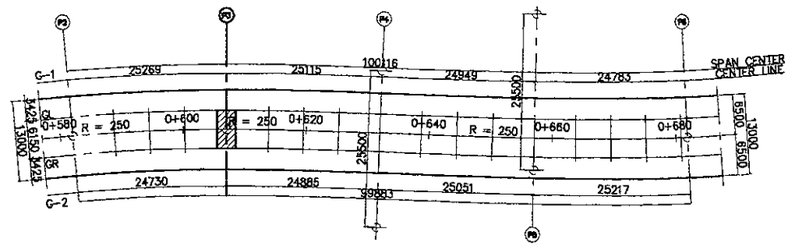

KEY PLAN
SCALE : 1:1000

NOTES :
ALL DIMENSIONS QUALITY OF STEEL REQUIRE OF SM490W ASIDE FROM DIFFERENCE

JAPAN INTERNATIONAL COOPERATION AGENCY / KATAHIRA & ENGINEERS INTERNATIONAL	DESIGNED BY	CHECKED BY	SUBMITTED BY	REPUBLIC OF INDONESIA MINISTRY OF PUBLIC WORKS DIRECTORATE GENERAL OF HIGHWAYS	PROJECT AND LOCATION :	SCALE :	DRAWING TITLE :	DRAWING NO :
	Name: S. MATSUI	Name: T.OKUMURA	Name: M. KIUCHI		DETAILED DESIGN STUDY OF NORTH JAVA CORRIDOR FLYOVER PROJECT TANGGULANGIN FLYOVER - CONTRACT PACKAGE 3 (PETERONGAN - TANGGULANGIN) EAST JAVA PROVINCE	1 : 40	DETAIL OF GIRDER P3 (2 OF 2)	TST-31
	Sign	Sign	Sign	APPROVED BY: Ir. HERRY VAZA M,Eng.Sc NIP. : 110038400		FULL SIZE A3		SHEET NO : 31 / 46
	Date	Date	Date	Sign / Date				

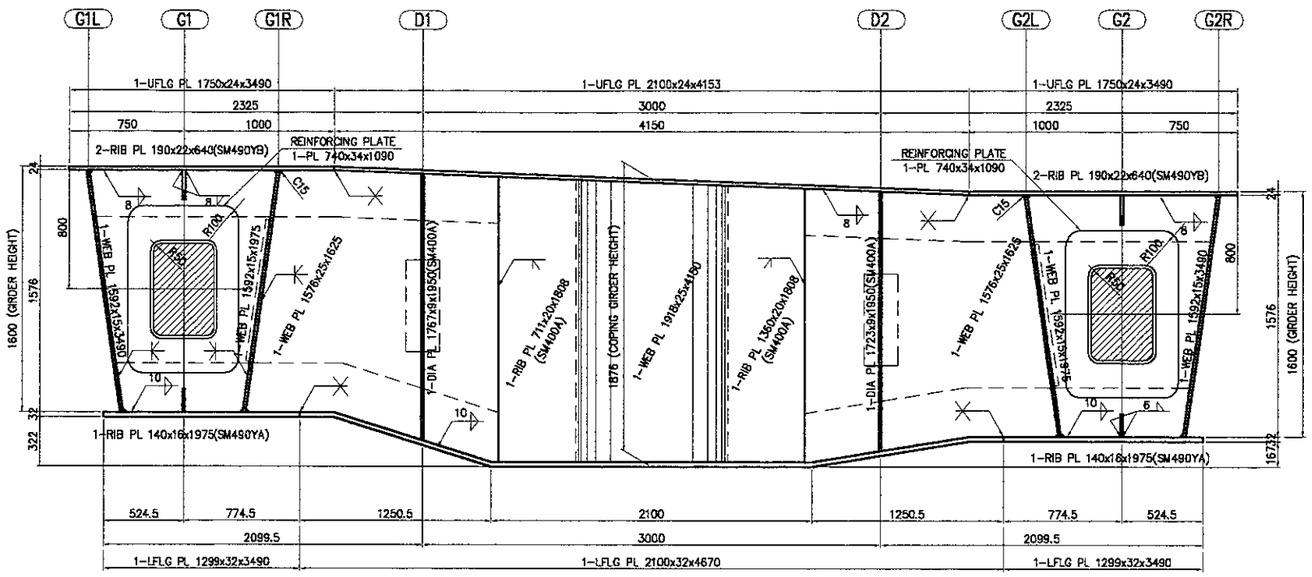

SECTION E-E
SCALE : 1:40

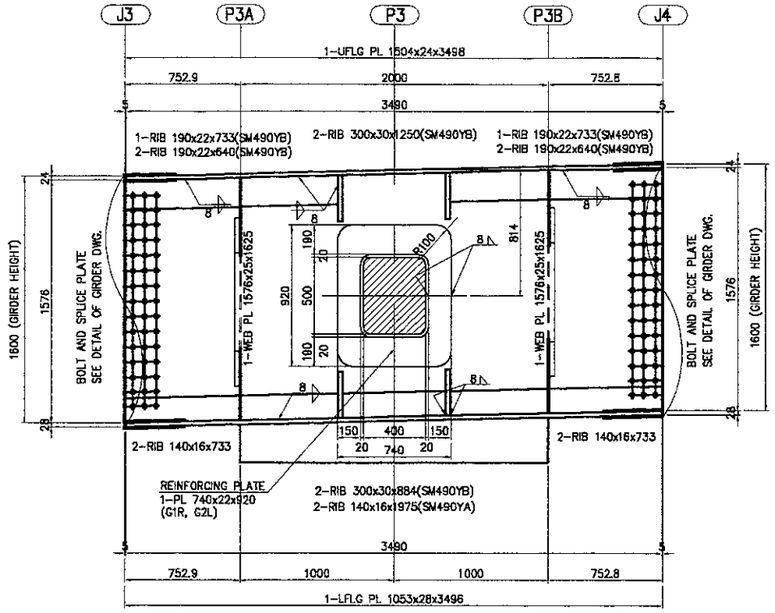

SECTION G1 (G2)
SCALE : 1:40

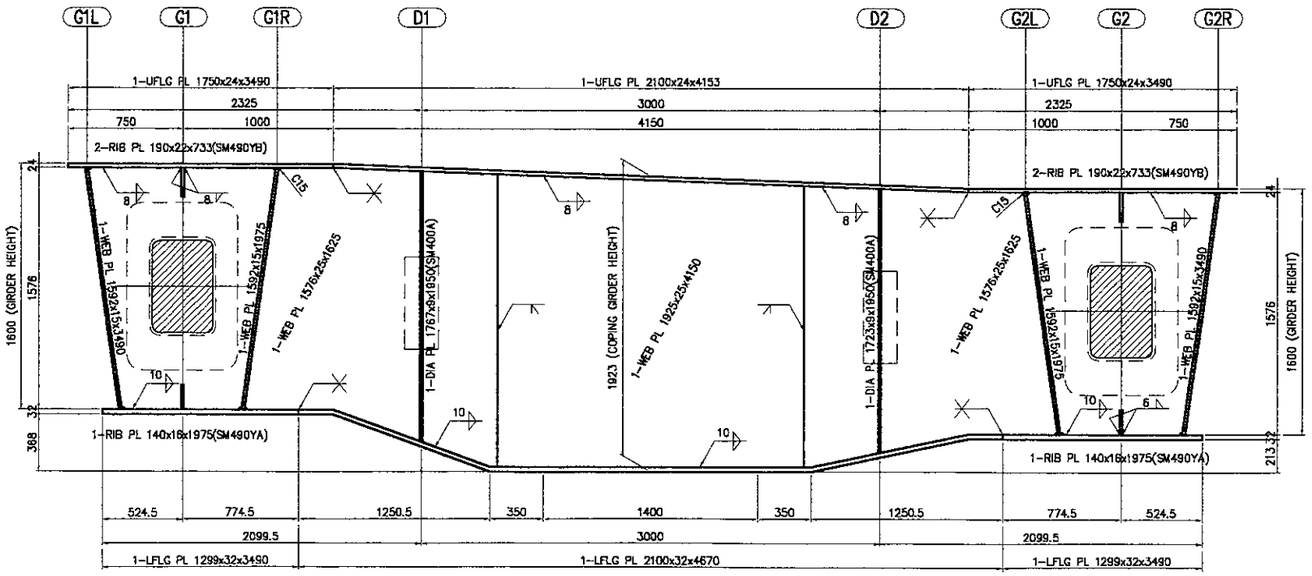

SECTION G-G
SCALE : 1:40

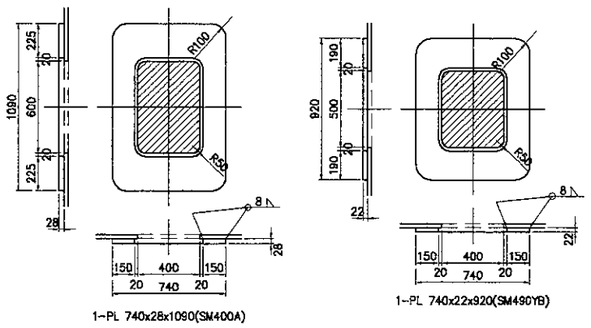

MAN HOLE OF GIRDER
SCALE : 1:40

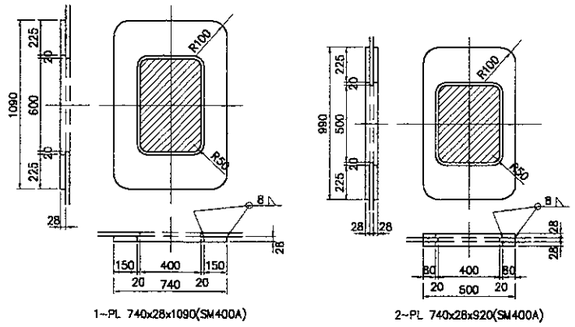

MAN HOLE OF PIER
SCALE : 1:40

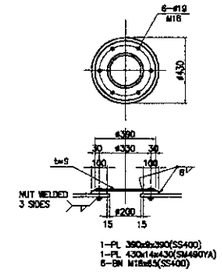

CONCRETE FILLING HOLE OF COLUMN
SCALE : 1:40

COORDINATES AND ELEVATIONS

		P6A	P6	P6B
G1L	X	9166236.6895	9166236.1981	9166235.7057
	Y	641389.3899	641390.2609	641391.1313
	Z	41.1465	41.1399	41.1328
G1	X	9166236.1410	9166235.6496	9166235.1572
	Y	641389.0800	641389.9510	641390.8214
	Z	41.1465	41.1399	41.1328
G1R	X	9166235.5824	9166235.1011	9166234.6087
	Y	641388.7702	641389.6411	641390.5115
	Z	41.1465	41.1399	41.1328
CL	X	9166233.4637	9166232.9723	9166232.4799
	Y	641387.5675	641388.4385	641389.3088
	Z	41.0696	41.0630	41.0559
G2L	X	9166231.3349	9166230.8436	9166230.3511
	Y	641386.3648	641387.2358	641388.1062
	Z	40.9928	40.9862	40.9790
G2	X	9166230.7864	9166230.2951	9166229.8026
	Y	641386.0550	641386.9259	641387.7963
	Z	40.9928	40.9862	40.9790
G2R	X	9166230.2379	9166229.7465	9166229.2541
	Y	641385.7451	641386.6160	641387.4864
	Z	40.9928	40.9862	40.9790

NOTES :
ALL DIMENSIONS QUALITY OF STEEL REQUIRE OF SM490W ASIDE FROM DIFFERENCE

JICA JAPAN INTERNATIONAL COOPERATION AGENCY	DESIGNED BY	CHECKED BY	SUBMITTED BY	REPUBLIC OF INDONESIA MINISTRY OF PUBLIC WORKS DIRECTORATE GENERAL OF HIGHWAYS	PROJECT AND LOCATION :	SCALE :	DRAWING TITLE :	DRAWING NO :
KEI KATAHIRA & ENGINEERS INTERNATIONAL	Name S. MATSUI	Name T. OKUMURA	Name M. KIUCHI	APPROVED BY Ir. HERRY VAZA M,Eng.Sc NIP. : 110038400	DETAILED DESIGN STUDY OF NORTH JAVA CORRIDOR FLYOVER PROJECT TANGGULANGIN FLYOVER - CONTRACT PACKAGE 3 (PETERONGAN - TANGGULANGIN) EAST JAVA PROVINCE	1:40, 1:50 1:500	DETAIL OF GIRDER P4 (1 OF 4)	TST-32
	Sign	Sign	Sign	Sign		FULL SIZE A3		SHEET NO : 32 / 46
	Date	Date	Date	Date				

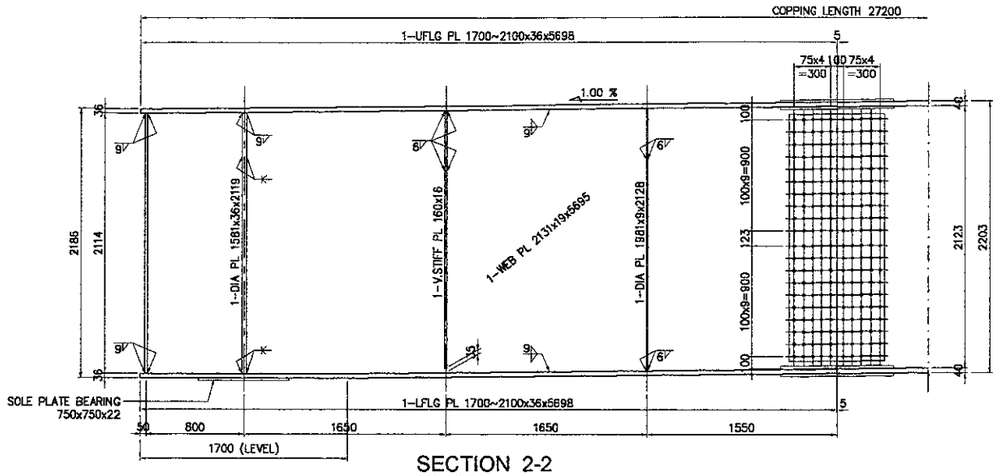

SECTION 2-2
SCALE : 1:50

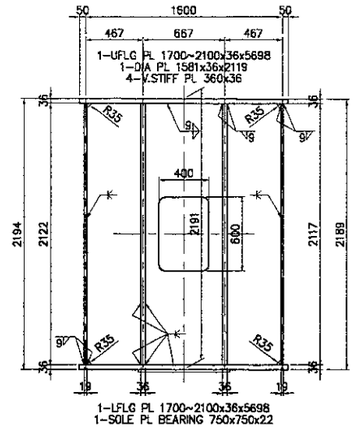

SECTION 3-3
SCALE : 1:50

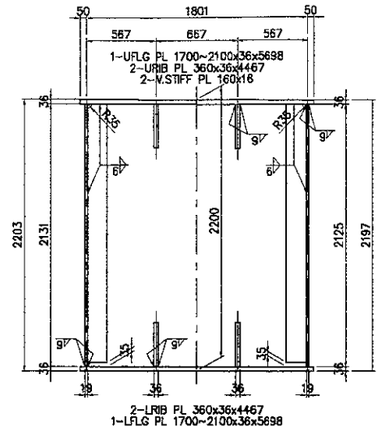

SECTION 4-4
SCALE : 1:50

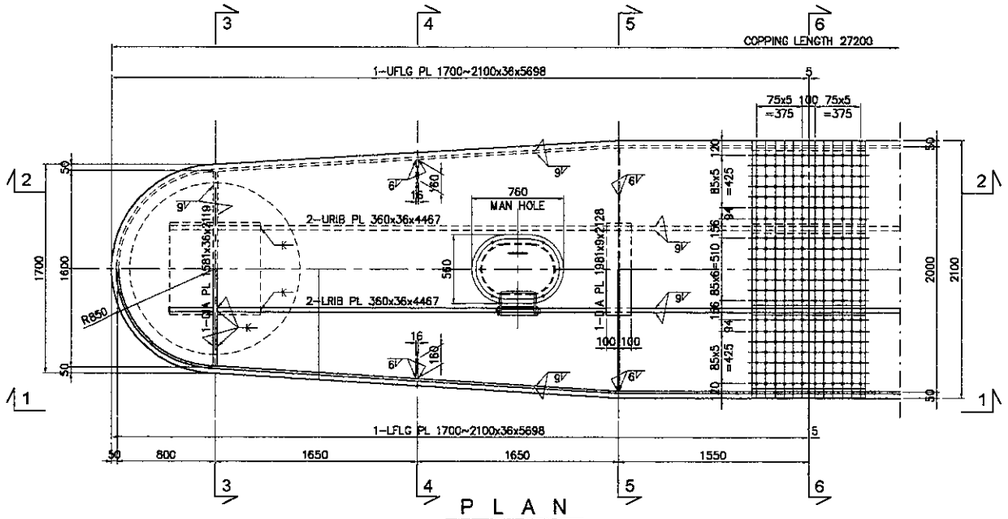

PLAN
SCALE : 1:50

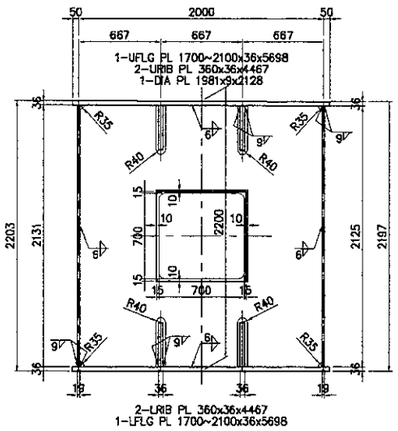

SECTION 5-5
SCALE : 1:50

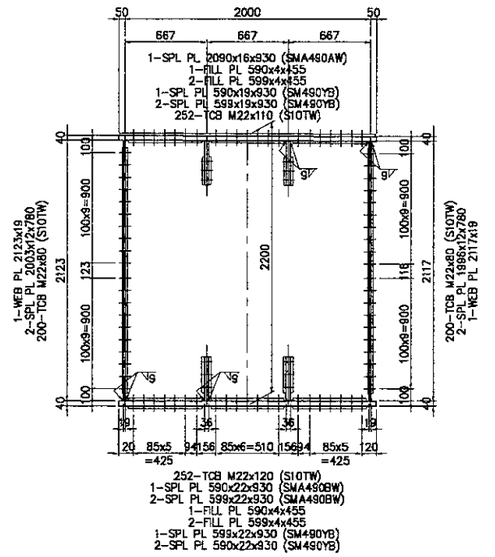

SECTION 6-6
SCALE : 1:50

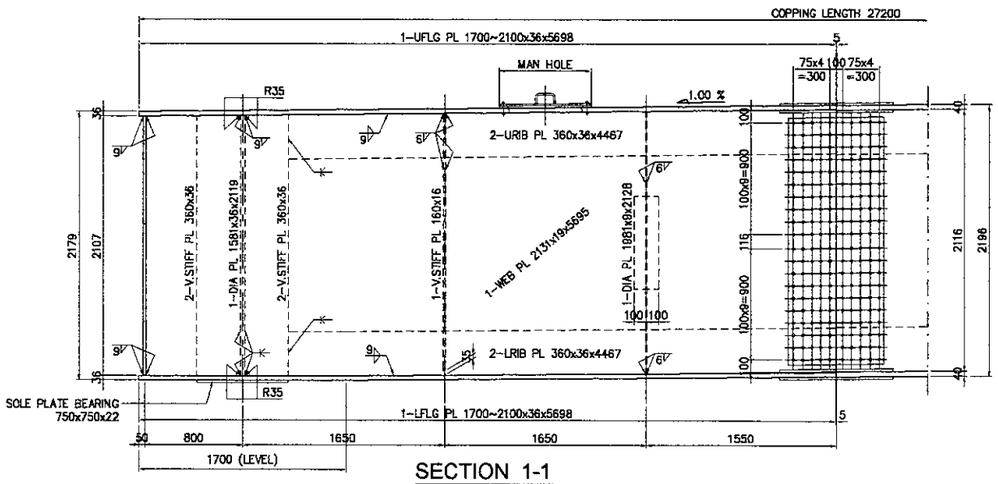

SECTION 1-1
SCALE : 1:50

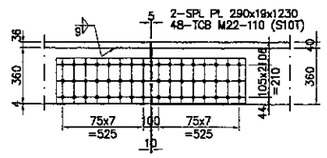

URIB PL FLANGE

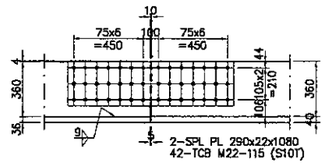

LRIB PL FLANGE

DETAIL OF SPLICE AT RIB PLATE
SCALE : 1:40

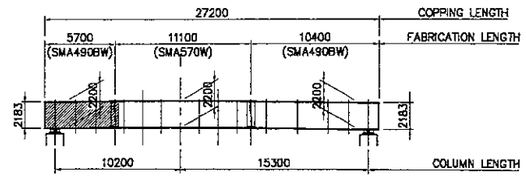

KEY PLAN
SCALE : 1:500

JICA JAPAN INTERNATIONAL COOPERATION AGENCY	DESIGNED BY	CHECKED BY	SUBMITTED BY	REPUBLIC OF INDONESIA MINISTRY OF PUBLIC WORKS DIRECTORATE GENERAL OF HIGHWAYS	PROJECT AND LOCATION :	SCALE :	DRAWING TITLE :	DRAWING NO :
KEI KATAHIRA & ENGINEERS INTERNATIONAL	Name S. MATSUI	Name T. OKUMURA	Name M. KIUCHI	APPROVED BY Ir. HERRY VAZA M.Eng.Sc NIP. : 110038400	DETAILED DESIGN STUDY OF NORTH JAVA CORRIDOR FLYOVER PROJECT TANGGULANGIN FLYOVER - CONTRACT PACKAGE 3 (PETERONGAN - TANGGULANGIN) EAST JAVA PROVINCE	1:50, 1:500	DETAIL OF GIRDER P4 (2 OF 4)	TST-33
	Sign	Sign	Sign	Sign		FULL SIZE A3		SHEET NO : 33 / 46
	Date	Date	Date	Date				

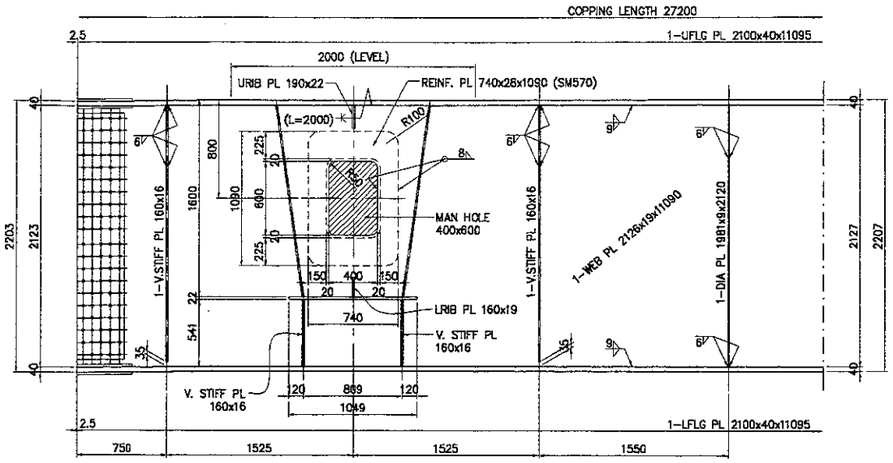

SECTION 2-2
SCALE : 1:50

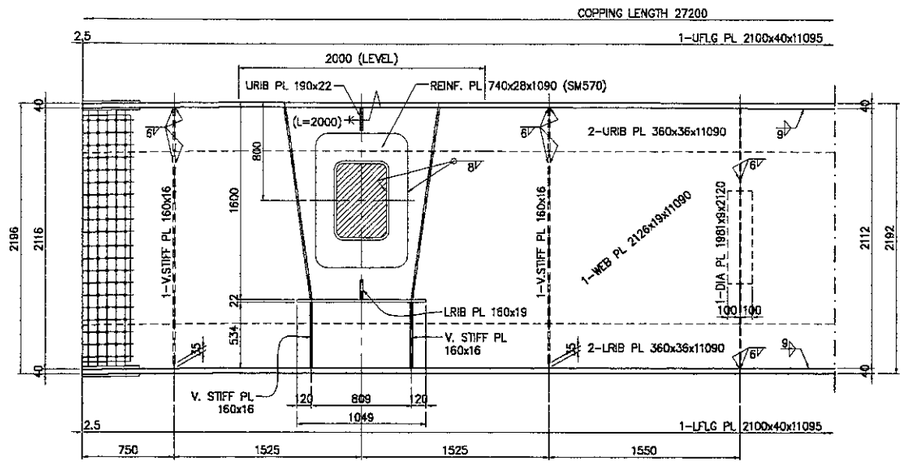

SECTION 1-1
SCALE : 1:50

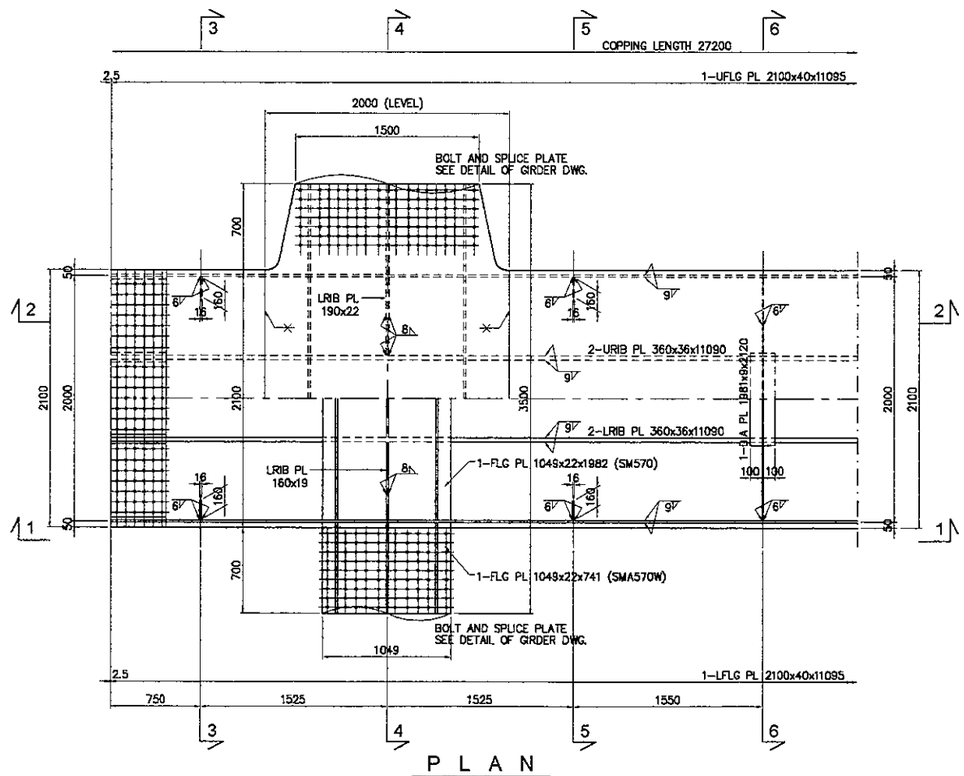

P L A N
SCALE : 1:50

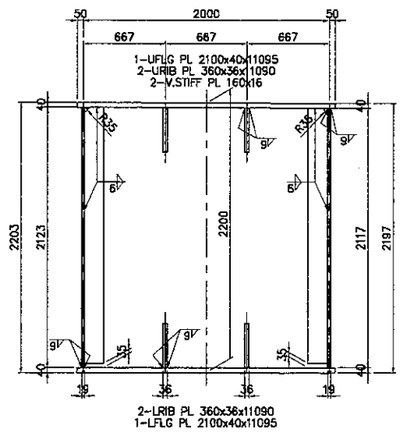

SECTION 3-3
SCALE : 1:50

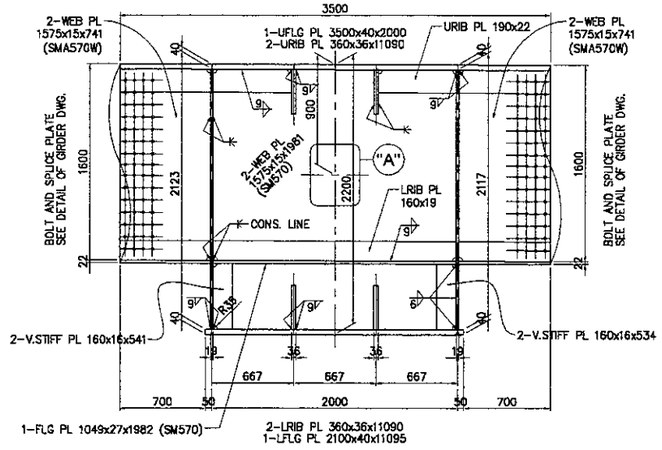

SECTION 4-4
SCALE : 1:50

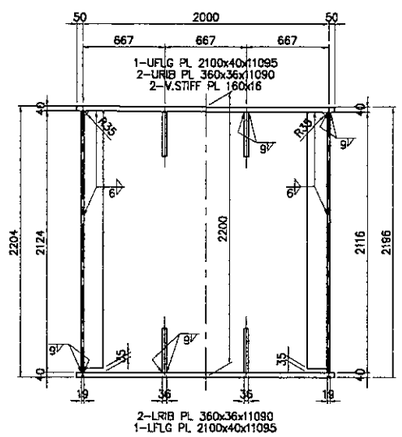

SECTION 5-5
SCALE : 1:50

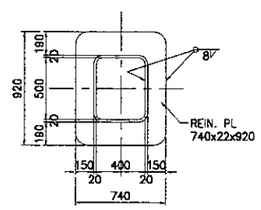

DETAIL "A"
SCALE : 1:50

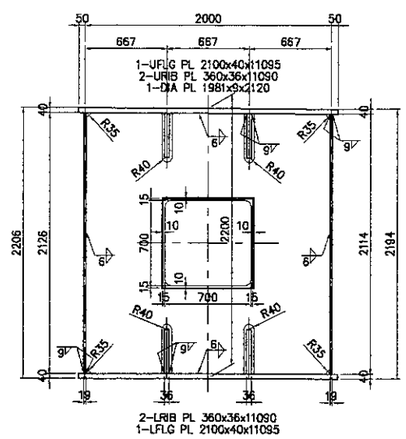

SECTION 6-6
SCALE : 1:50

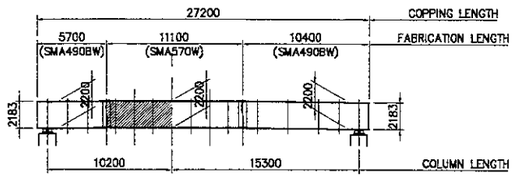

KEY PLAN
SCALE : 1:500

JICA JAPAN INTERNATIONAL COOPERATION AGENCY	DESIGNED BY	CHECKED BY	SUBMITTED BY	REPUBLIC OF INDONESIA MINISTRY OF PUBLIC WORKS DIRECTORATE GENERAL OF HIGHWAYS	PROJECT AND LOCATION :	SCALE :	DRAWING TITLE :	DRAWING NO :
KEI KATAHIRA & ENGINEERS INTERNATIONAL	Name: S. MATSUI	Name: T. OKUMURA	Name: M. KIUCHI	APPROVED BY: Ir. HERRY VAZA M,Eng.Sc NIP. : 110038400	DETAILED DESIGN STUDY OF NORTH JAVA CORRIDOR FLYOVER PROJECT TANGGULANGIN FLYOVER - CONTRACT PACKAGE 3 (PETERONGAN - TANGGULANGIN) EAST JAVA PROVINCE	1:40, 1:50 1:500	DETAIL OF GIRDER P4 (3 OF 4)	TST-34
	Sign	Sign	Sign	Sign		FULL SIZE A3		SHEET NO : 34 / 46
	Date	Date	Date	Date				

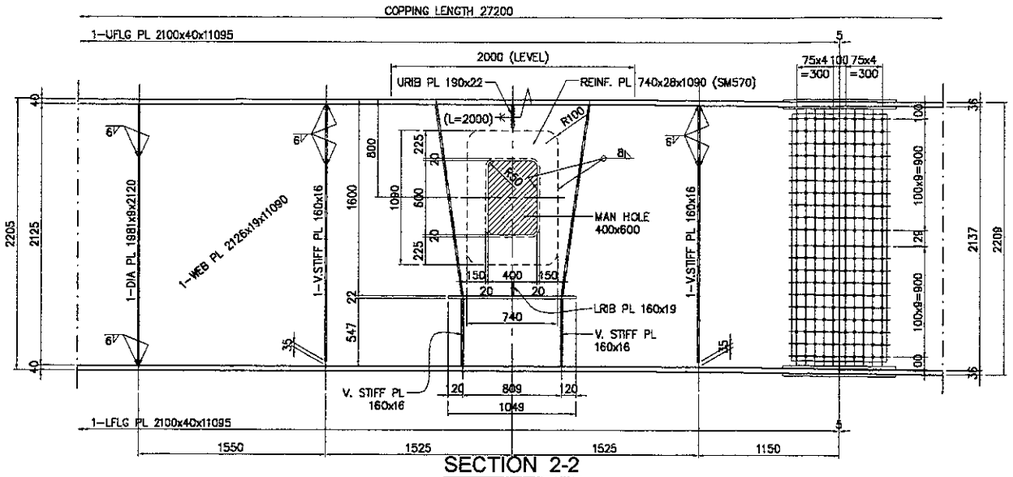

SECTION 2-2
SCALE : 1:50

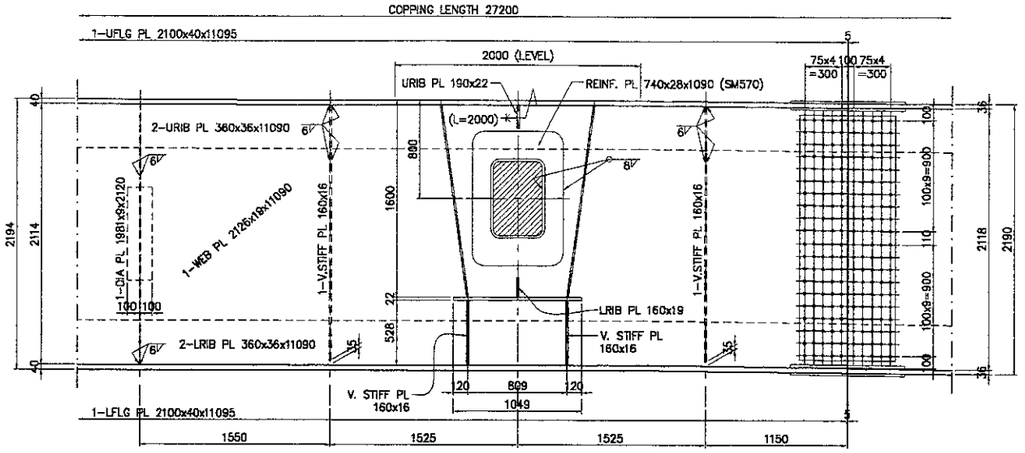

SECTION 1-1
SCALE : 1:50

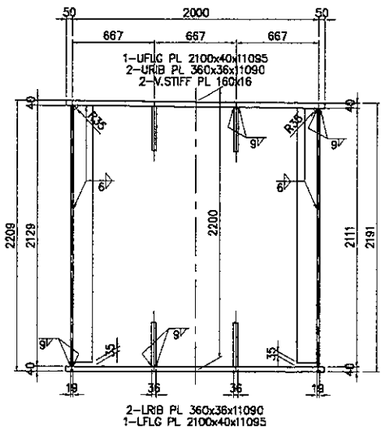

SECTION 3-3
SCALE : 1:50

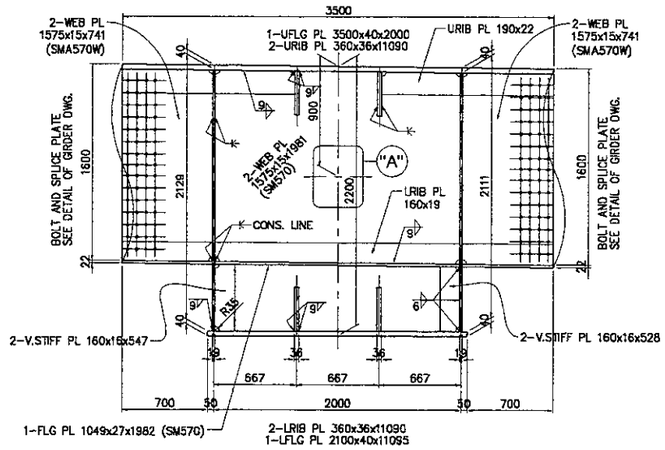

SECTION 4-4
SCALE : 1:50

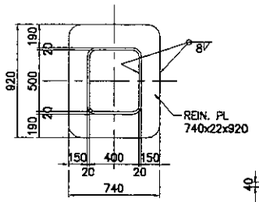

DETAIL "A"
SCALE : 1:50

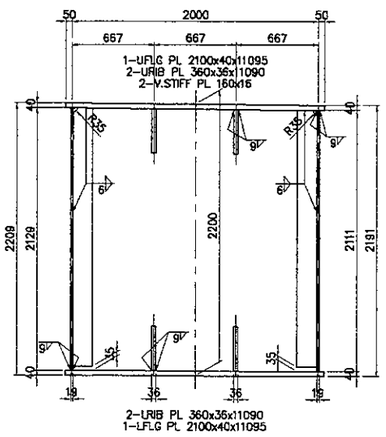

SECTION 5-5
SCALE : 1:50

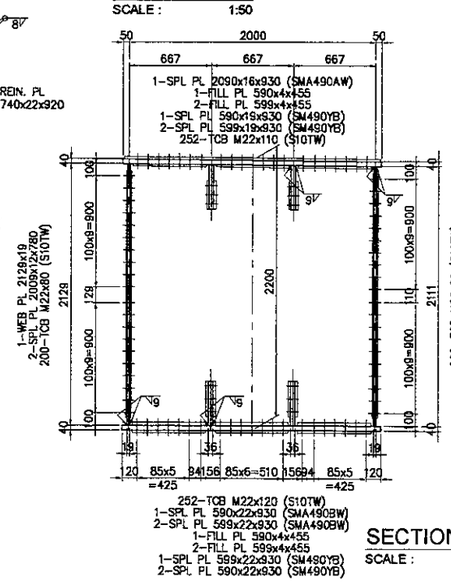

SECTION 6-6
SCALE : 1:50

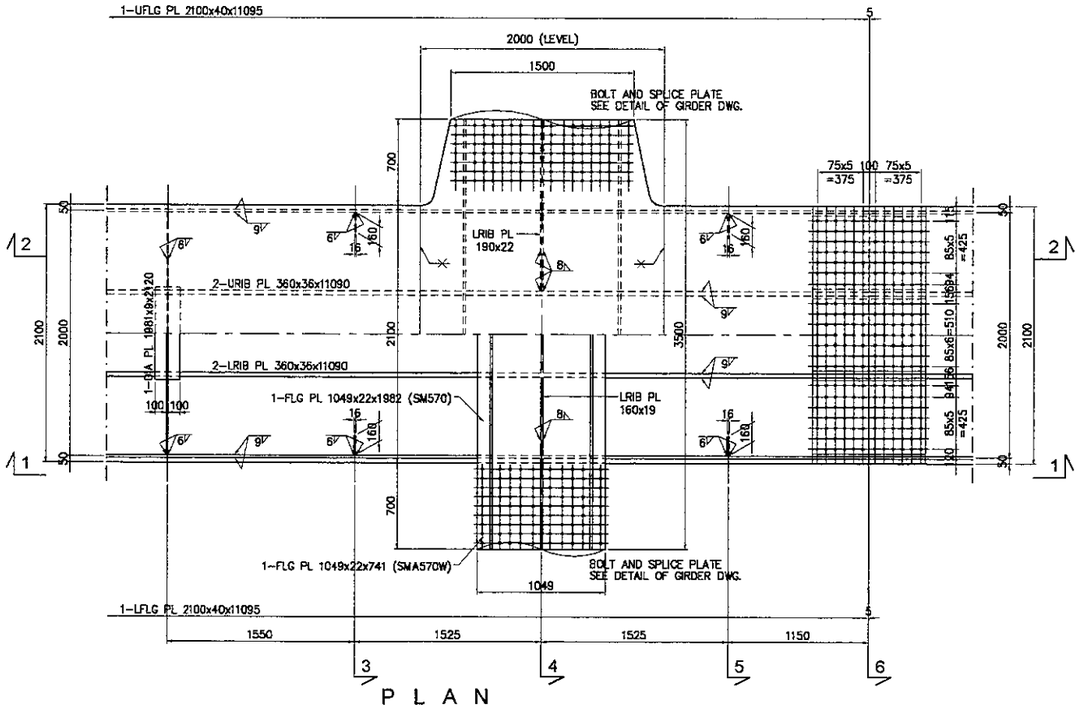

P L A N
SCALE : 1:50

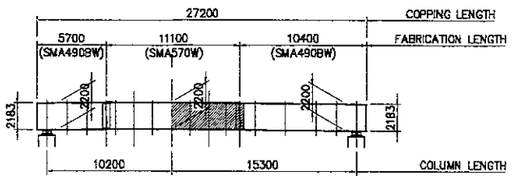

KEY PLAN
SCALE : 1:500

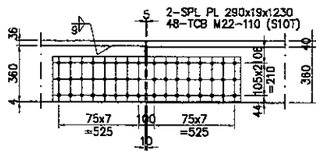

URIB PL FLANGE

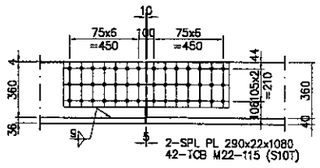

LRIB PL FLANGE

DETAIL OF SPLICE AT RIB PLATE
SCALE : 1:40

JICA JAPAN INTERNATIONAL COOPERATION AGENCY	DESIGNED BY	CHECKED BY	SUBMITTED BY	REPUBLIC OF INDONESIA MINISTRY OF PUBLIC WORKS DIRECTORATE GENERAL OF HIGHWAYS	PROJECT AND LOCATION :	SCALE :	DRAWING TITLE :	DRAWING NO :
KEI KATAHIRA & ENGINEERS INTERNATIONAL	Name: S. MATSUI	Name: T. OKUMURA	Name: M. KIUCHI	APPROVED BY: Ir. HERRY VAZA M,Eng.Sc NIP. : 110038400	DETAILED DESIGN STUDY OF NORTH JAVA CORRIDOR FLYOVER PROJECT TANGGULANGIN FLYOVER - CONTRACT PACKAGE 3 (PETERONGAN - TANGGULANGIN) EAST JAVA PROVINCE	1:50, 1:500	DETAIL OF GIRDER P4 (4 OF 4)	TST-35
	Sign	Sign	Sign	Sign		FULL SIZE A3		SHEET NO : 35 / 46
	Date	Date	Date	Date				

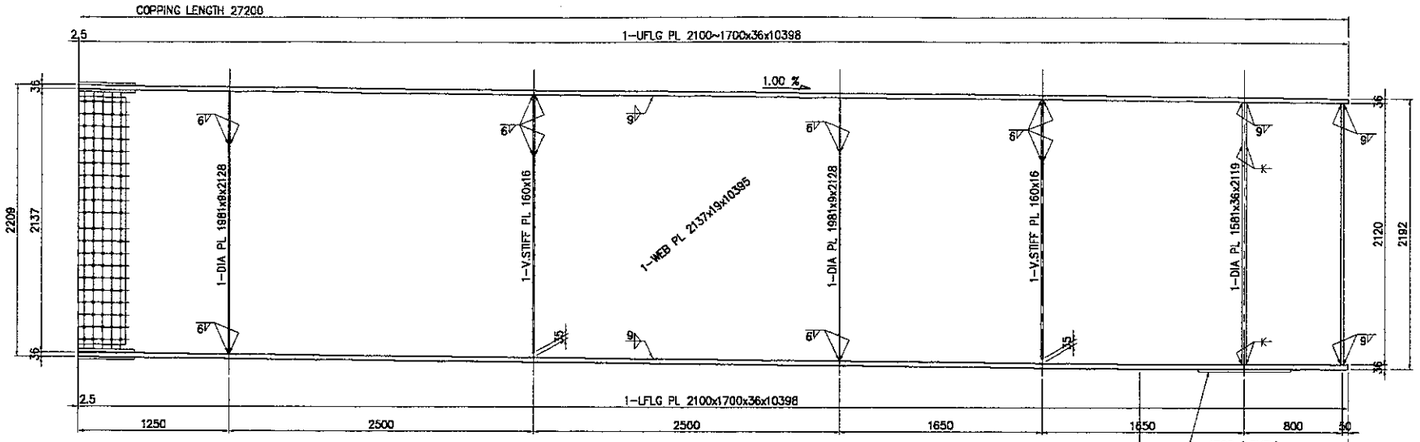

SECTION 2-2
SCALE : 1:50

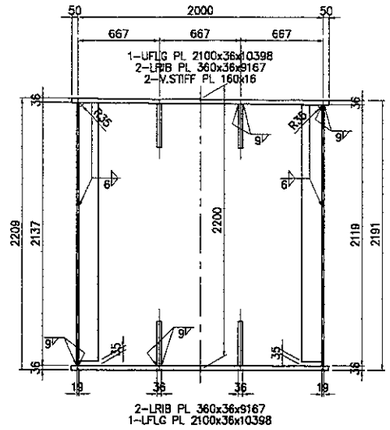

SECTION 3-3
SCALE : 1:50

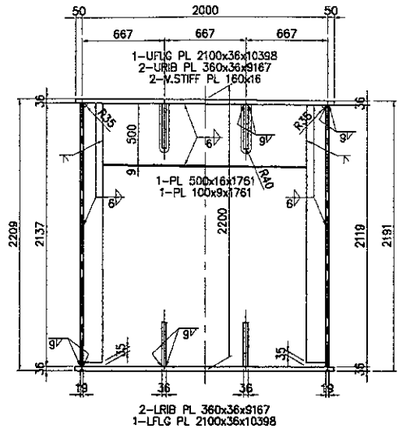

SECTION 4-4
SCALE : 1:50

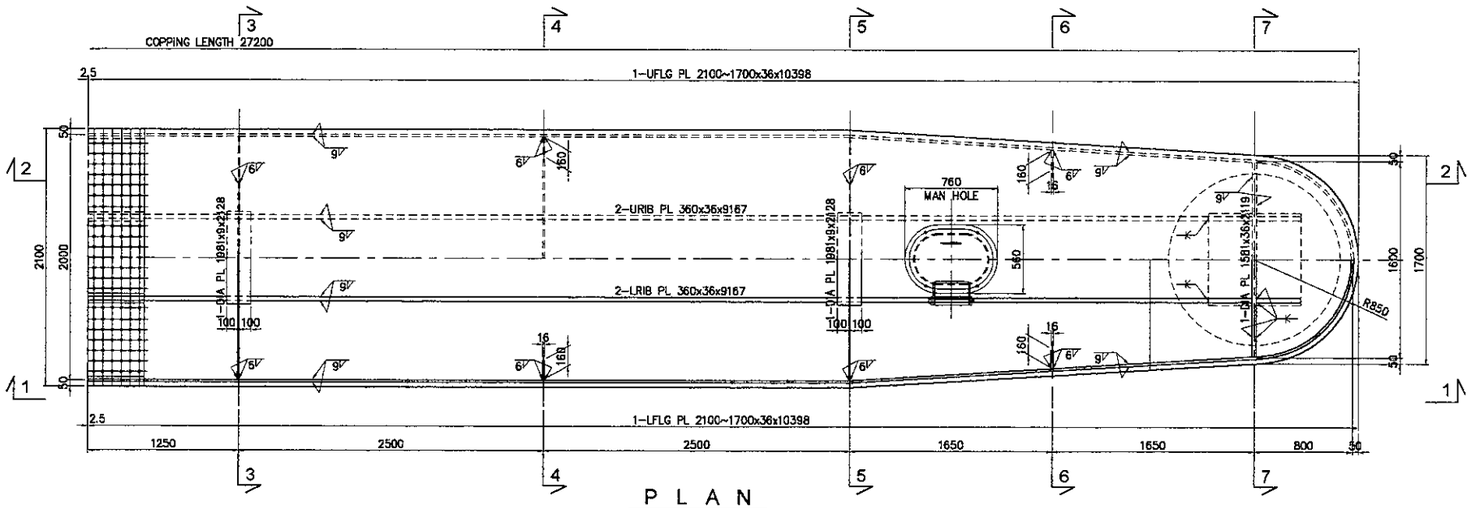

P L A N
SCALE : 1:50

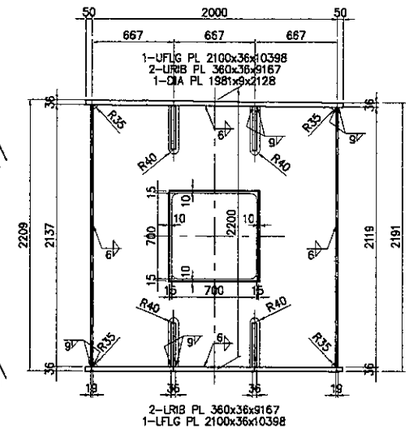

SECTION 5-5
SCALE : 1:50

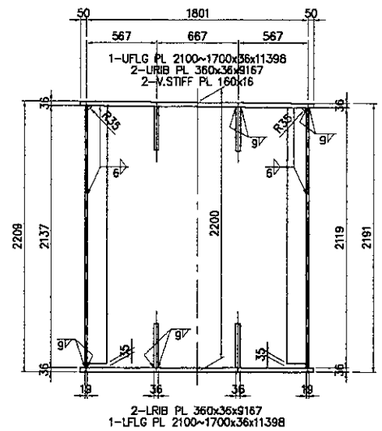

SECTION 6-6
SCALE : 1:50

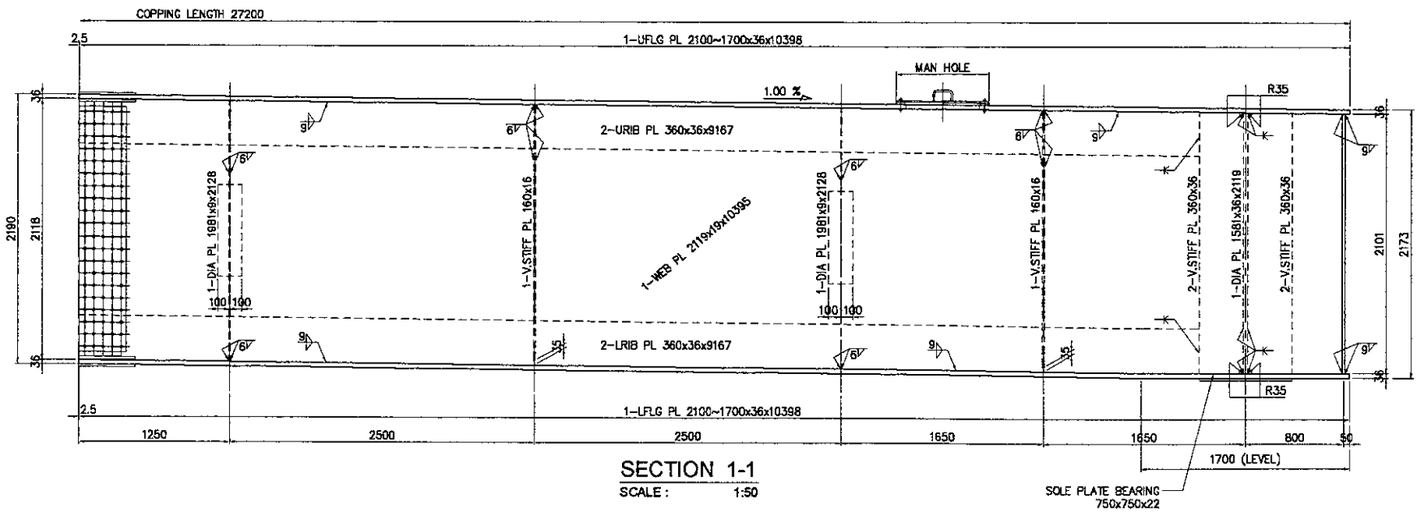

SECTION 1-1
SCALE : 1:50

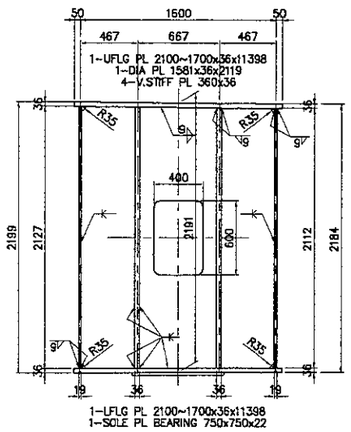

SECTION 7-7
SCALE : 1:50

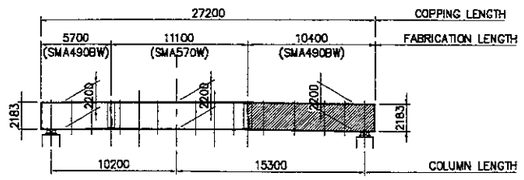

KEY PLAN
SCALE : 1:500

JICA JAPAN INTERNATIONAL COOPERATION AGENCY	DESIGNED BY	CHECKED BY	SUBMITTED BY	REPUBLIC OF INDONESIA MINISTRY OF PUBLIC WORKS DIRECTORATE GENERAL OF HIGHWAYS	PROJECT AND LOCATION :	SCALE :	DRAWING TITLE :	DRAWING NO :
KEI KATAHIRA & ENGINEERS INTERNATIONAL	Name: S. MATSUI	Name: T. OKUMURA	Name: M. KIUCHI	APPROVED BY: Ir. HERRY VAZA M,Eng.Sc NIP. : 110038400	DETAILED DESIGN STUDY OF NORTH JAVA CORRIDOR FLYOVER PROJECT TANGGULANGIN FLYOVER - CONTRACT PACKAGE 3 (PETERONGAN - TANGGULANGIN) EAST JAVA PROVINCE	1:40, 1:50 1:500	DETAIL OF GIRDER P5 (1 OF 4)	TST-36
	Sign	Sign	Sign	Sign		FULL SIZE A3		SHEET NO : 36 / 46
	Date	Date	Date	Date				

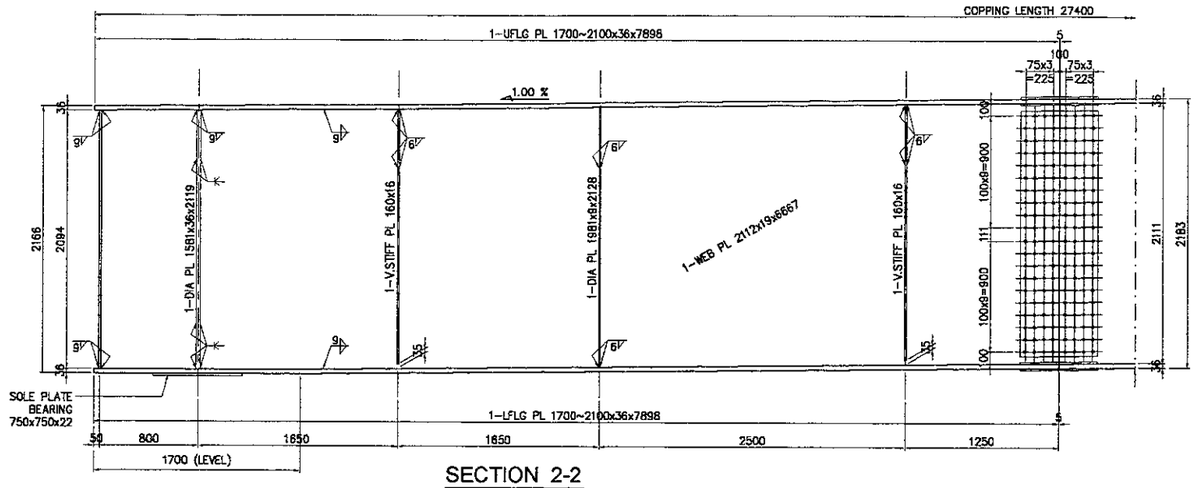

SECTION 2-2
SCALE : 1:50

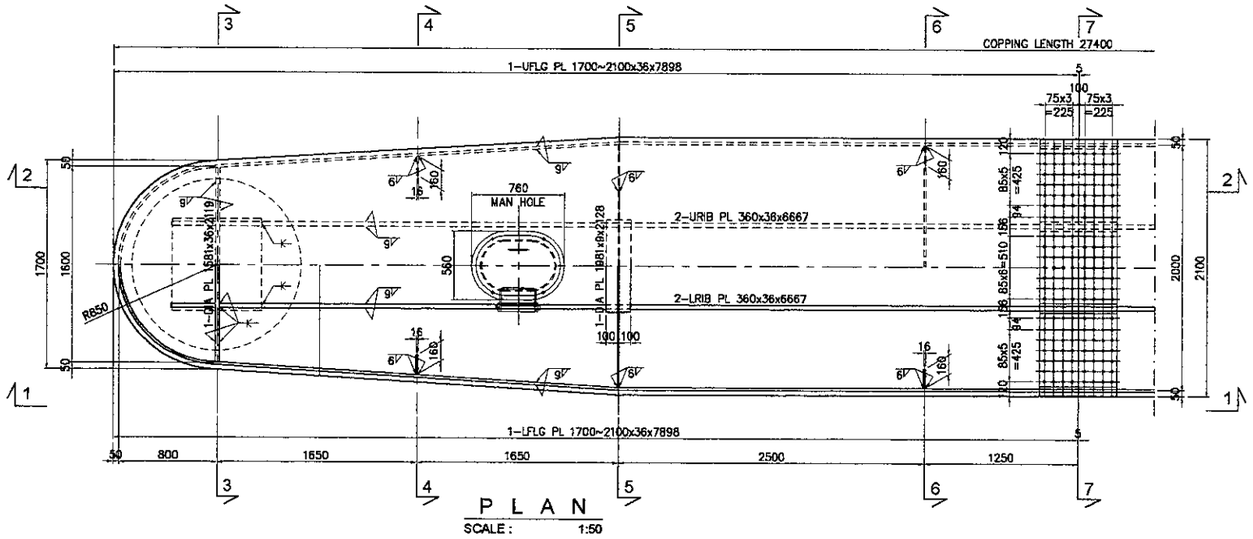

PLAN
SCALE : 1:50

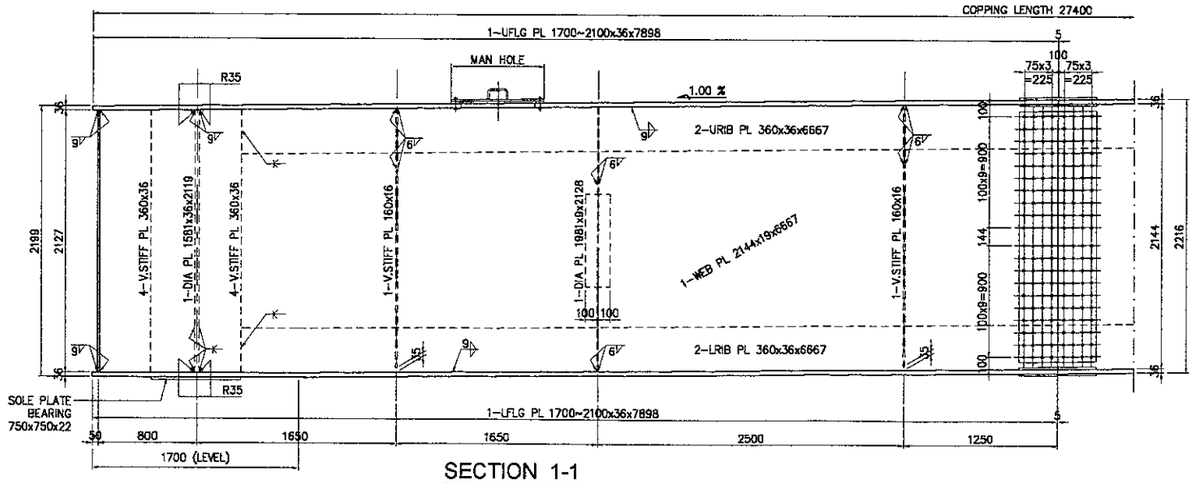

SECTION 1-1
SCALE : 1:50

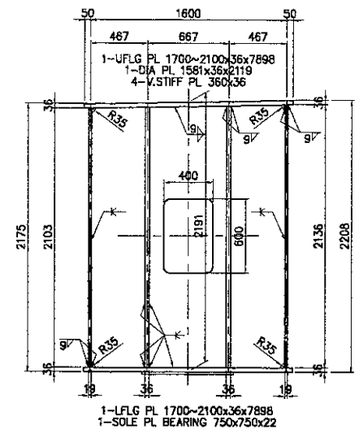

SECTION 3-3
SCALE : 1:50

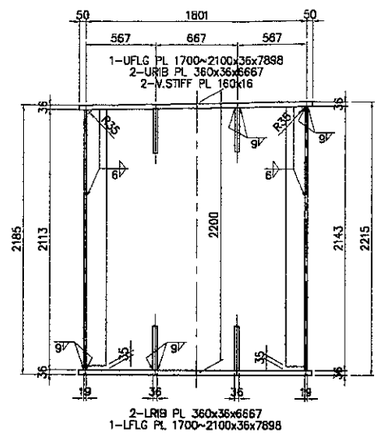

SECTION 4-4
SCALE : 1:50

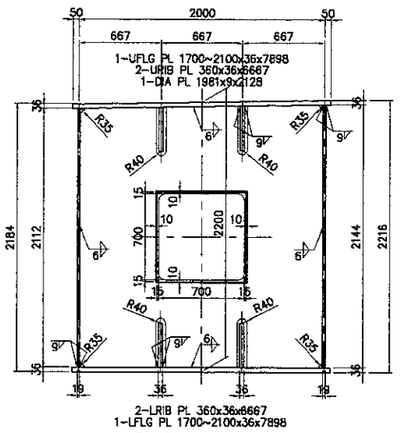

SECTION 5-5
SCALE : 1:50

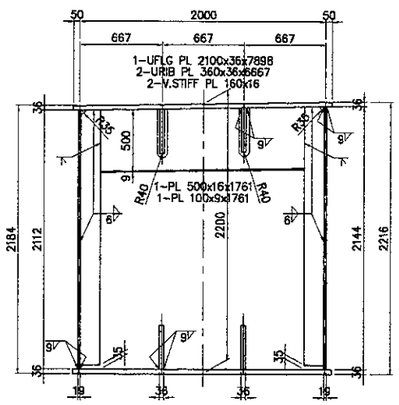

SECTION 6-6
SCALE : 1:50

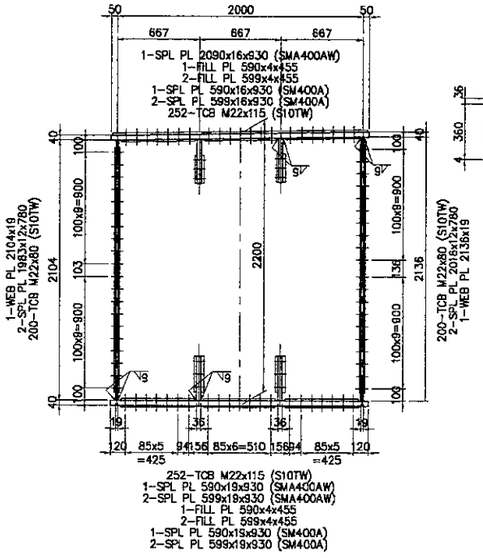

SECTION 7-7
SCALE : 1:50

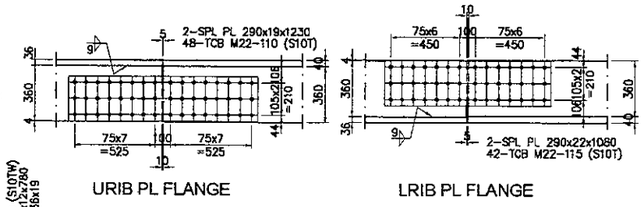

DETAIL OF SPLICE AT RIB PLATE
SCALE : 1:40

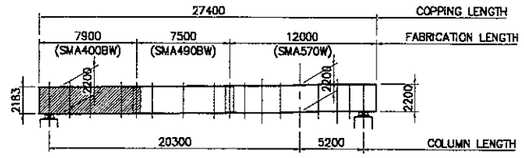

KEY PLAN
SCALE : 1:500

JAPAN INTERNATIONAL COOPERATION AGENCY	DESIGNED BY	CHECKED BY	SUBMITTED BY	REPUBLIC OF INDONESIA MINISTRY OF PUBLIC WORKS DIRECTORATE GENERAL OF HIGHWAYS	PROJECT AND LOCATION :	SCALE :	DRAWING TITLE :	DRAWING NO :
KATAHIRA & ENGINEERS INTERNATIONAL	Name: S. MATSUI Sign: Date:	Name: T. OKUMURA Sign: Date:	Name: M. KIUCHI Sign: Date:	APPROVED BY: Ir. HERRY VAZA M,Eng.Sc NIP. : 110038400 Sign: Date:	DETAILED DESIGN STUDY OF NORTH JAVA CORRIDOR FLYOVER PROJECT TANGGULANGIN FLYOVER - CONTRACT PACKAGE 3 (PETERONGAN - TANGGULANGIN) EAST JAVA PROVINCE	1:40, 1:50 1:500 FULL SIZE A3	DETAIL OF GIRDER P5 (2 OF 4)	TST-37 SHEET NO : 37 / 46

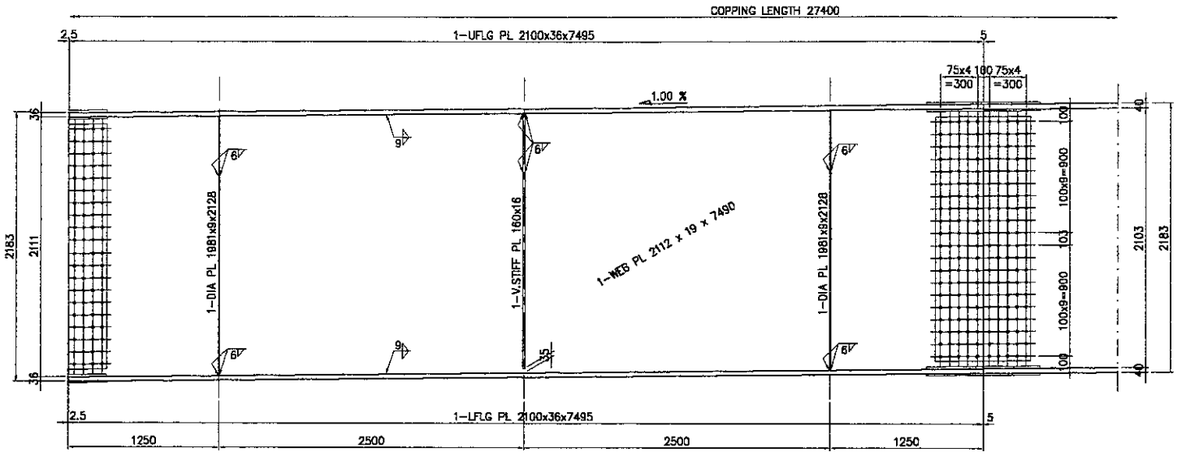

SECTION 2-2
SCALE : 1:50

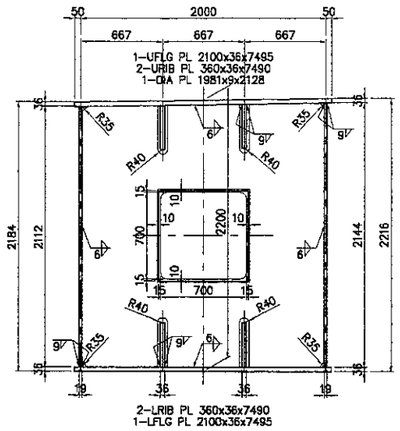

SECTION 3-3
SCALE : 1:50

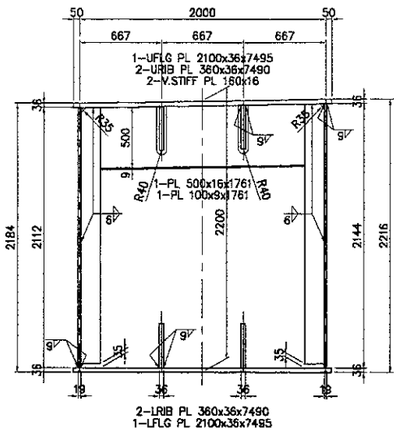

SECTION 4-4
SCALE : 1:50

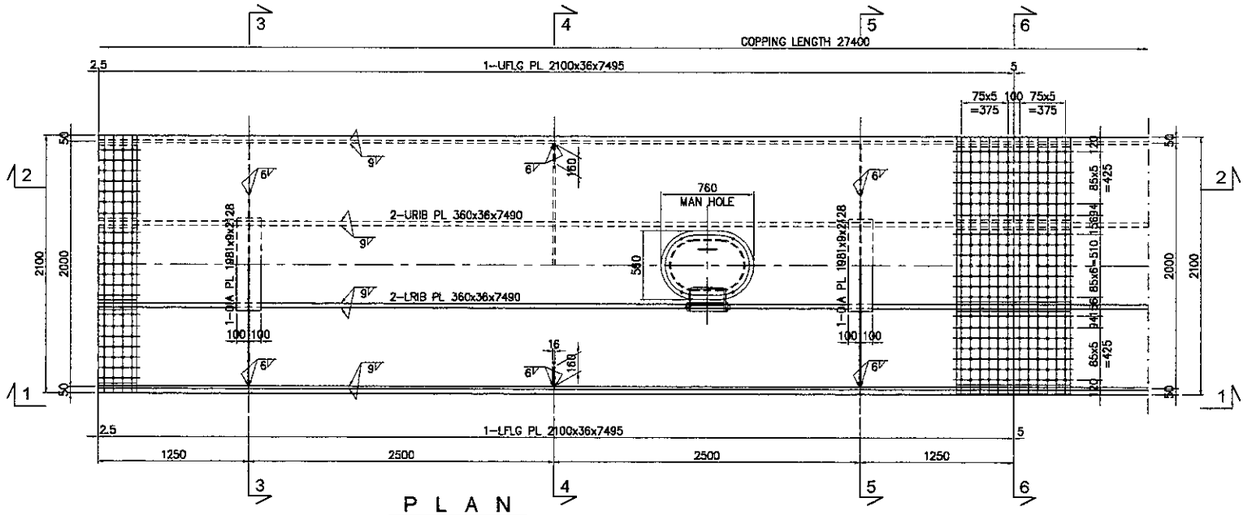

PLAN
SCALE : 1:50

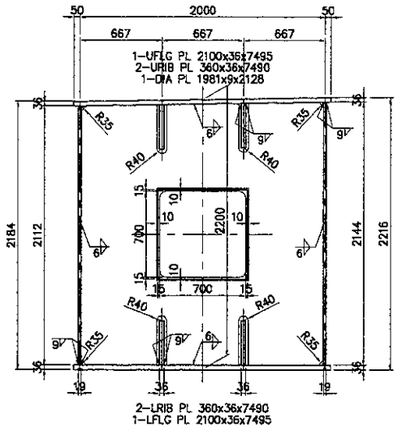

SECTION 5-5
SCALE : 1:50

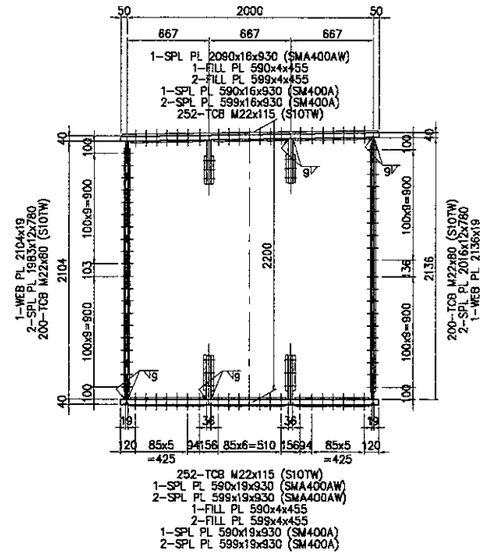

SECTION 6-6
SCALE : 1:50

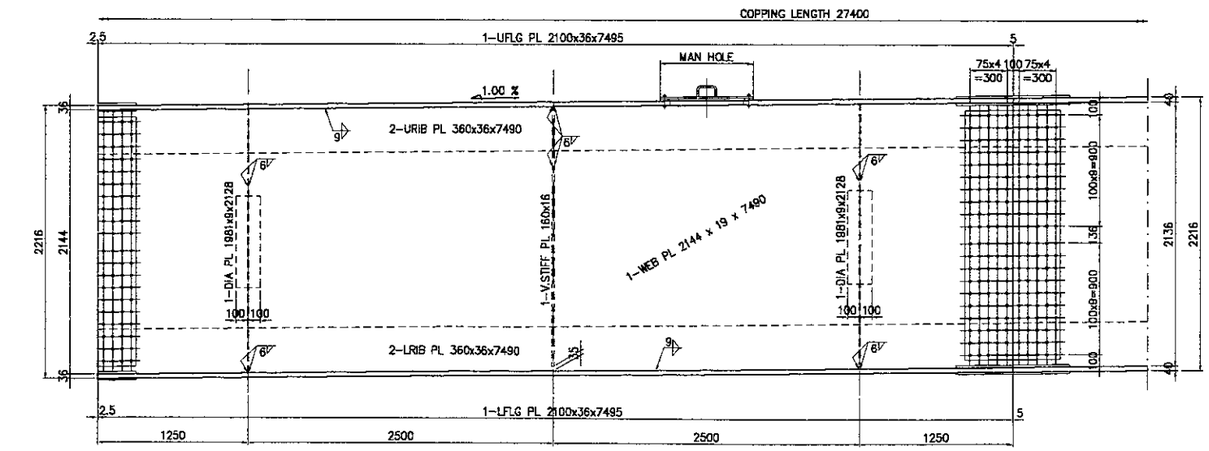

SECTION 1-1
SCALE : 1:50

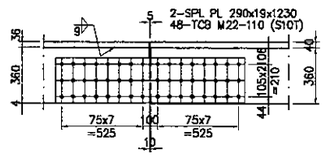

URIB PL FLANGE

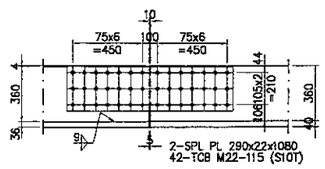

LRIB PL FLANGE

DETAIL OF SPLICE AT RIB PLATE
SCALE : 1:40

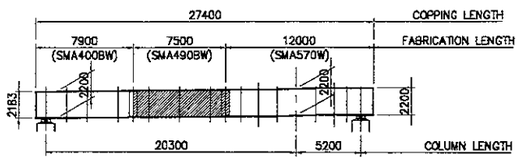

KEY PLAN
SCALE : 1:500

JAPAN INTERNATIONAL COOPERATION AGENCY / KATAHIRA & ENGINEERS INTERNATIONAL	DESIGNED BY	CHECKED BY	SUBMITTED BY	REPUBLIC OF INDONESIA MINISTRY OF PUBLIC WORKS DIRECTORATE GENERAL OF HIGHWAYS	PROJECT AND LOCATION :	SCALE :	DRAWING TITLE :	DRAWING NO :
	Name S. MATSUI	Name T. OKUMURA	Name M. KIUCHI		DETAILED DESIGN STUDY OF NORTH JAVA CORRIDOR FLYOVER PROJECT TANGGULANGIN FLYOVER - CONTRACT PACKAGE 3 (PETERONGAN - TANGGULANGIN) EAST JAVA PROVINCE	1:50, 1:500	DETAIL OF GIRDER P5 (3 OF 4)	TST-38
	Sign	Sign	Sign	APPROVED BY Ir. HERRY VAZA M.Eng.Sc NIP. : 110038400 Sign		FULL SIZE A3		SHEET NO : 38 / 46
	Date	Date	Date	Date				

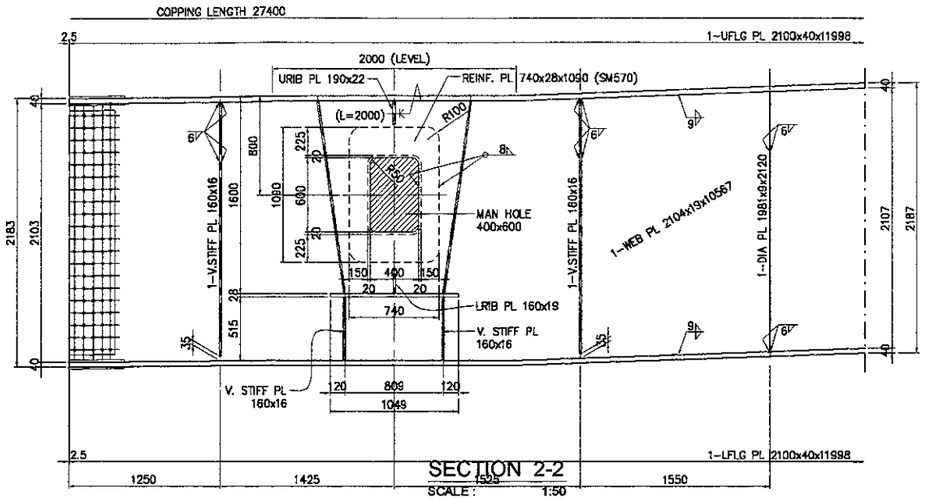

SECTION 2-2
SCALE : 1:50

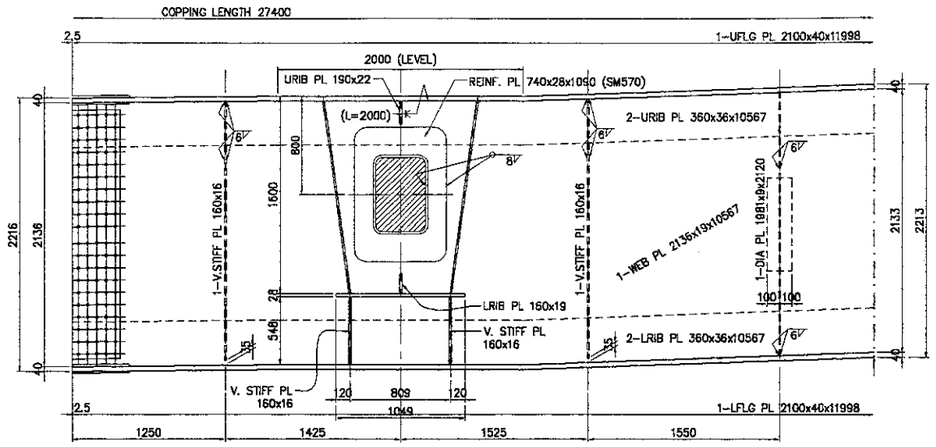

SECTION 1-1
SCALE : 1:50

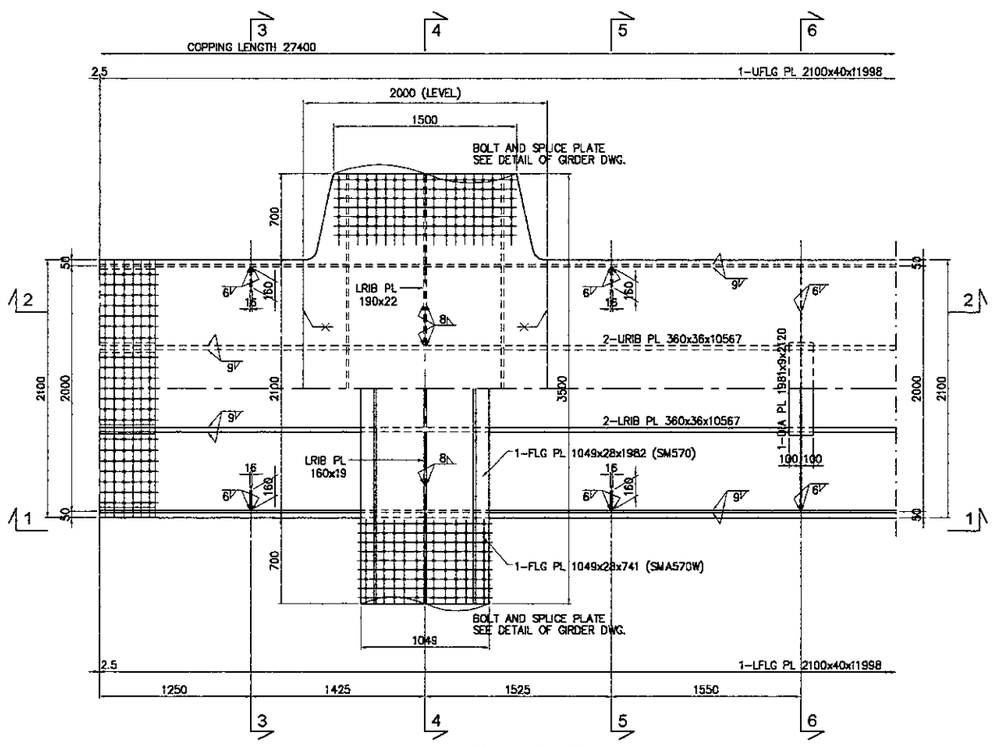

P L A N
SCALE : 1:50

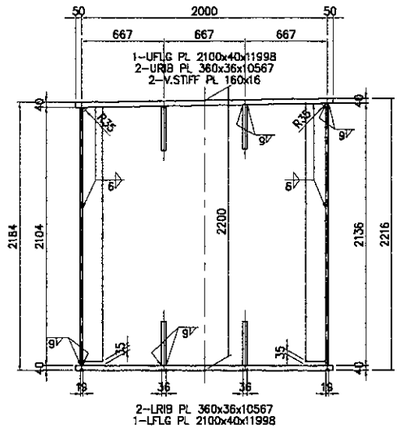

SECTION 3-3
SCALE : 1:50

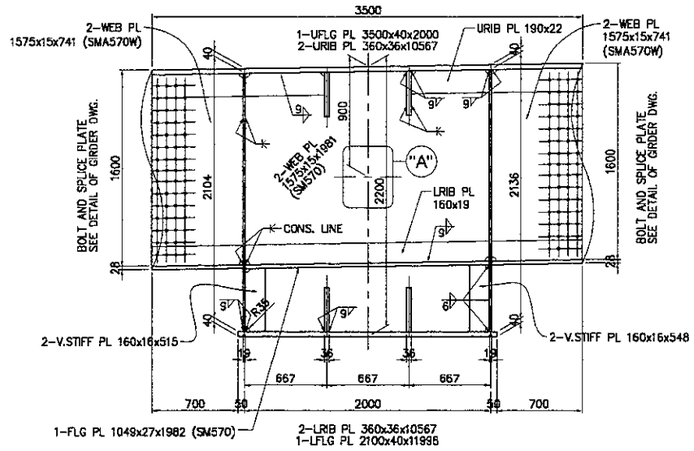

SECTION 4-4
SCALE : 1:50

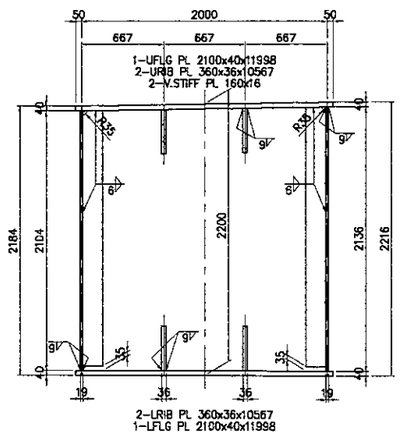

SECTION 5-5
SCALE : 1:50

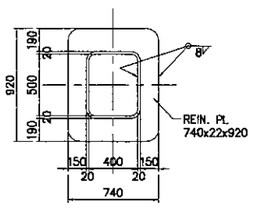

DETAIL "A"
SCALE : 1:50

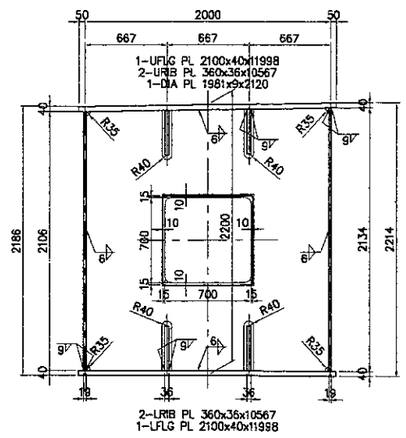

SECTION 6-6
SCALE : 1:50

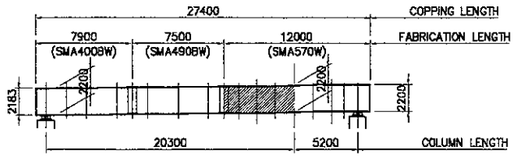

KEY PLAN
SCALE : 1:500

JICA JAPAN INTERNATIONAL COOPERATION AGENCY	DESIGNED BY	CHECKED BY	SUBMITTED BY	REPUBLIC OF INDONESIA MINISTRY OF PUBLIC WORKS DIRECTORATE GENERAL OF HIGHWAYS	PROJECT AND LOCATION :	SCALE :	DRAWING TITLE :	DRAWING NO :
KATAHIRA & ENGINEERS INTERNATIONAL	Name: S. MATSUI	Name: T. OKUMURA	Name: M. KIUCHI		DETAILED DESIGN STUDY OF NORTH JAVA CORRIDOR FLYOVER PROJECT TANGGULANGIN FLYOVER - CONTRACT PACKAGE 3 (PETERONGAN - TANGGULANGIN) EAST JAVA PROVINCE	1:50, 1:500	DETAIL OF GIRDER P5 (4 OF 4)	TST-39
	Sign	Sign	Sign	APPROVED BY: Ir. HERRY VAZA M,Eng.Sc NIP. : 110038400		FULL SIZE A3		SHEET NO : 39 / 46
	Date	Date	Date	Sign / Date				

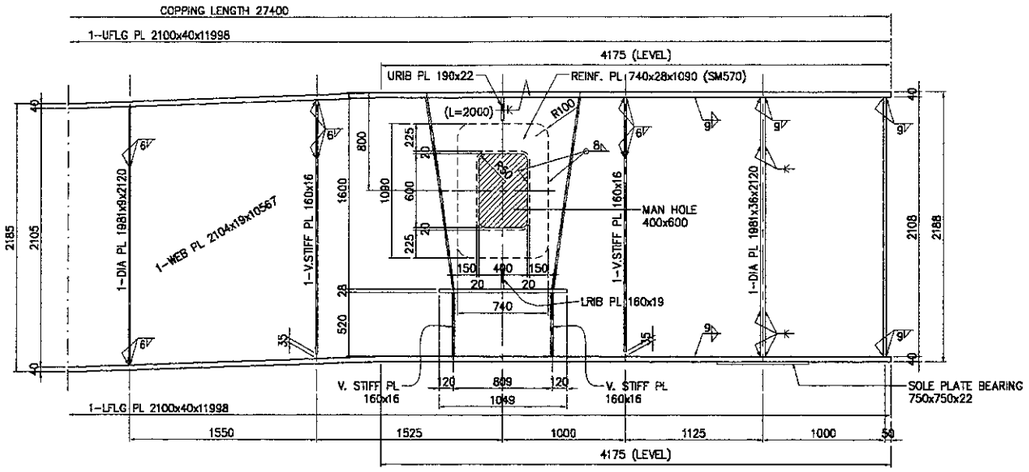

SECTION 2-2
SCALE : 1:50

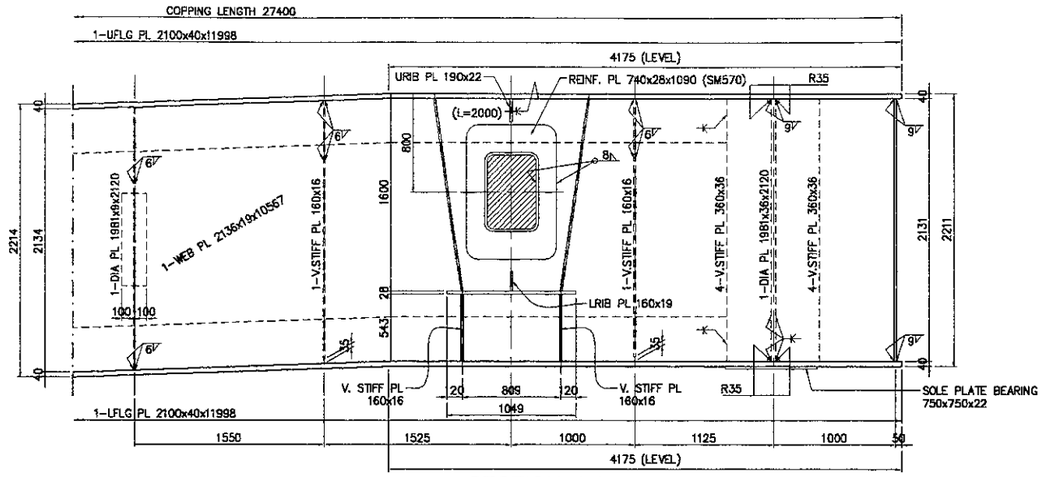

SECTION 1-1
SCALE : 1:50

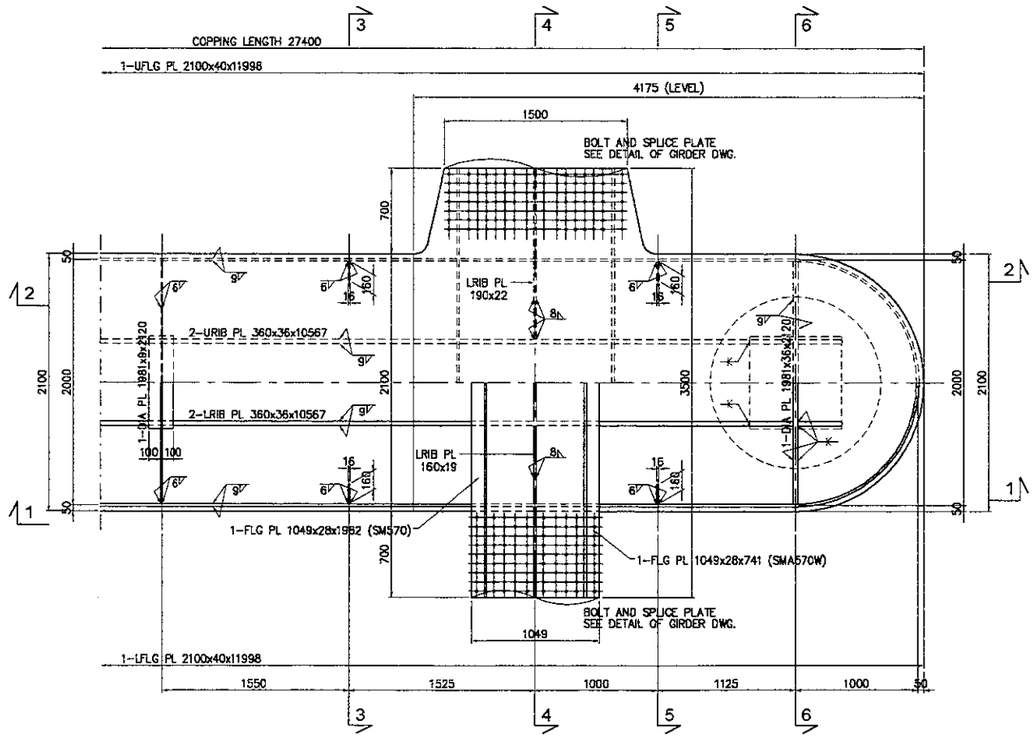

P L A N
SCALE : 1:50

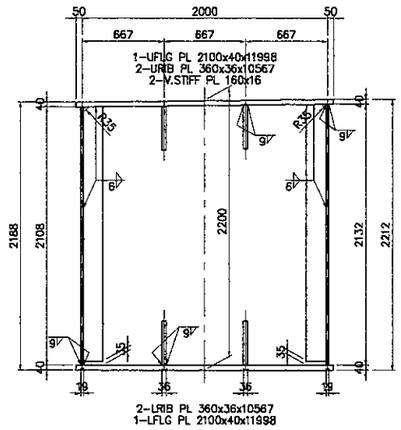

SECTION 3-3
SCALE : 1:50

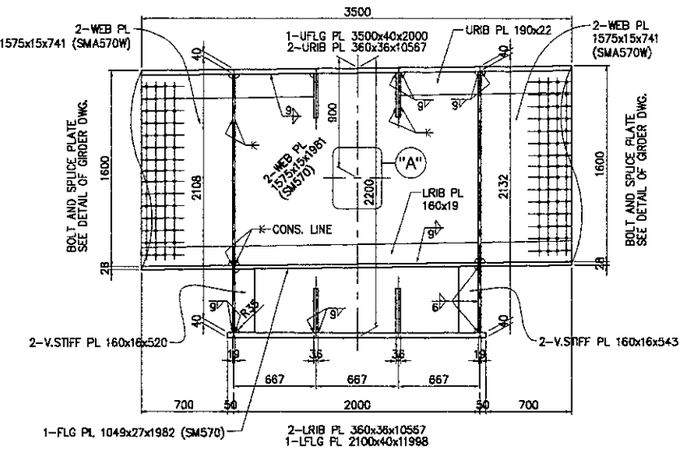

SECTION 4-4
SCALE : 1:50

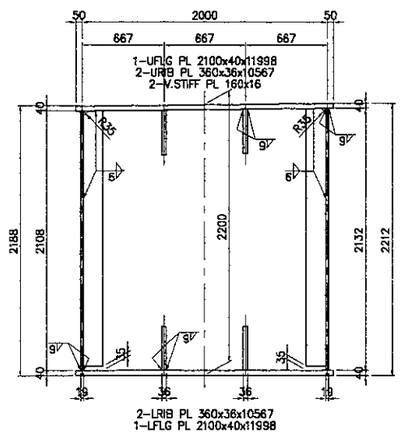

SECTION 5-5
SCALE : 1:50

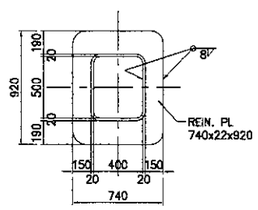

DETAIL "A"
SCALE : 1:50

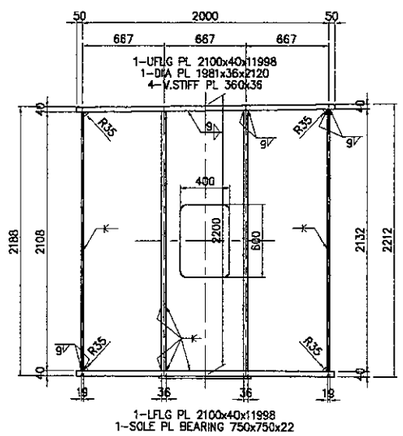

SECTION 6-6
SCALE : 1:50

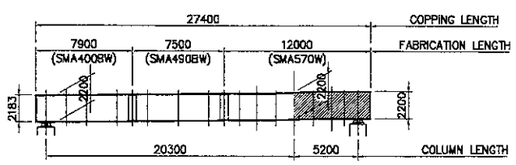

KEY PLAN
SCALE : 1:500

JAPAN INTERNATIONAL COOPERATION AGENCY / KATAHIRA & ENGINEERS INTERNATIONAL	DESIGNED BY	CHECKED BY	SUBMITTED BY	REPUBLIC OF INDONESIA MINISTRY OF PUBLIC WORKS DIRECTORATE GENERAL OF HIGHWAYS	PROJECT AND LOCATION :	SCALE :	DRAWING TITLE :	DRAWING NO :
	Name: S. MATSUI	Name: T. OKUMURA	Name: M. KIUCHI		DETAILED DESIGN STUDY OF NORTH JAVA CORRIDOR FLYOVER PROJECT TANGGULANGIN FLYOVER - CONTRACT PACKAGE 3 (PETERONGAN - TANGGULANGIN) EAST JAVA PROVINCE	1:10, 1:20 1:400	DETAIL OF GIRDER ACCESSORIES	TST-40
	Sign	Sign	Sign	APPROVED BY: Ir. HERRY VAZA M,Eng.Sc NIP. : 110038400		FULL SIZE A3		SHEET NO : 40 / 46
	Date	Date	Date	Sign / Date				

DETAIL OF VERTICAL WEB STIFFENER

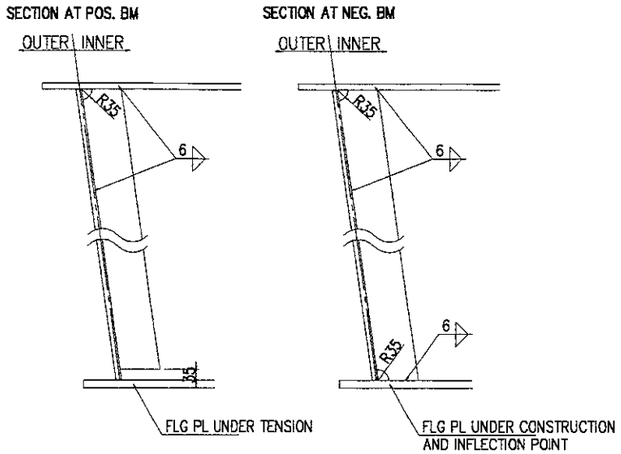

DETAIL OF WEB HOLE FOR DRAIN PIPE

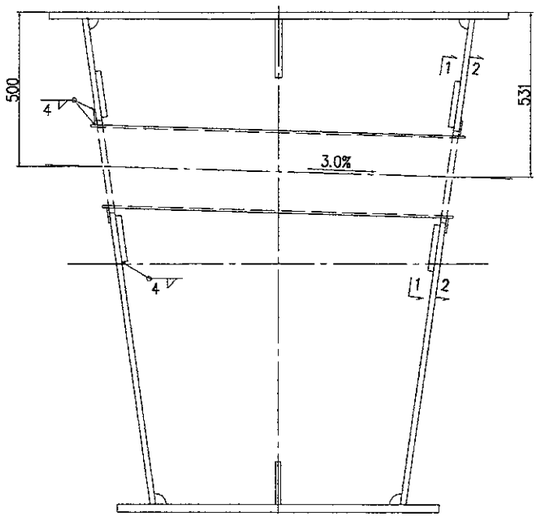

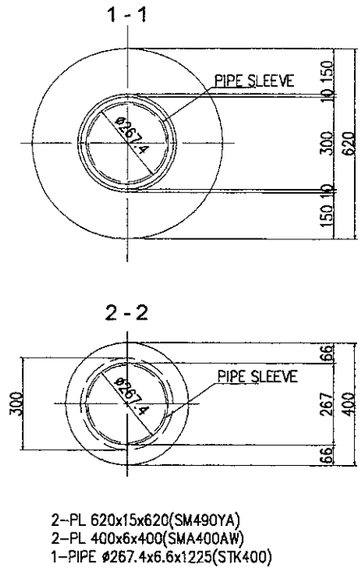

2-PL 620x15x620(SM490YA)
2-PL 400x6x400(SMA400AW)
1-PIPE ø267.4x6.6x1225(STK400)

DETAIL OF MAN HOLE

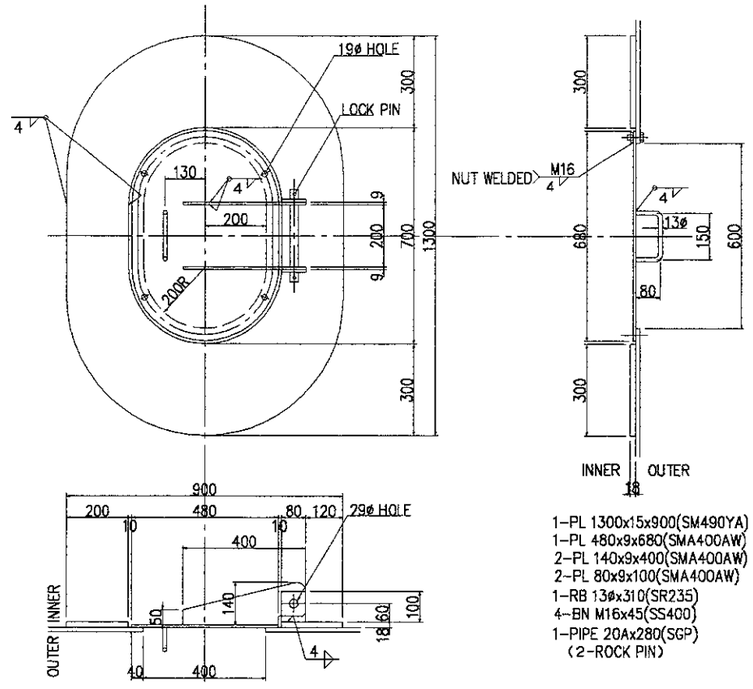

1-PL 1300x15x900(SM490YA)
1-PL 480x9x680(SMA400AW)
2-PL 140x9x400(SMA400AW)
2-PL 80x9x100(SMA400AW)
1-RB 13ø x310(SR235)
4-BN M16x45(SS400)
1-PIPE 20Ax280(SGP)
(2-ROCK PIN)

DETAIL OF SOLE PLATE

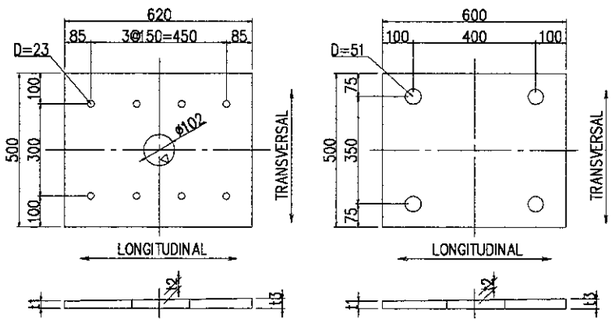

1-SOLE PL 500xtwx620

BEARING SOLE PLATE THICKNESS

	S1(P2)		S2(P6)	
	G1	G2	G1	G2
t1	22.5	22.2	43.5	39.9
t2	36	36	33	31
t3	49.5	49.8	22.5	22.1
tw	52	52	46	42

1-SOLE PL 500xtwx600

STOPPER SOLE PLATE THICKNESS

	S1(P2)		S2(P6)	
	G1	G2	G1	G2
t1	22.0	22.7	43.1	39.6
t2	35	36	33	31
t3	48.0	49.4	22.9	22.4
tw	50	52	46	42

DETAIL OF DRAIN PIPE CROSSING

SCALE : 1:20

DIMENSION OF GIRDER

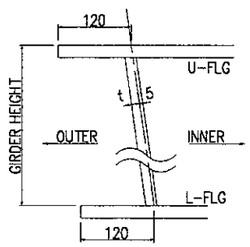

DETAIL OF HANGER

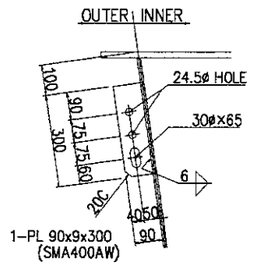

DETAIL OF LOG RIB

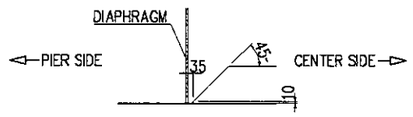

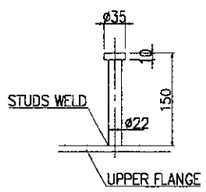

DETAIL OF STUDS (CONNECTION TO U-FLG)

SCALE : 1:10

STUDS SHALL BE WELDED TO UPPER SPLICE PLATE

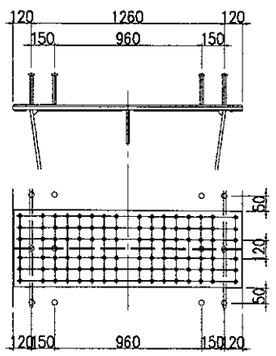

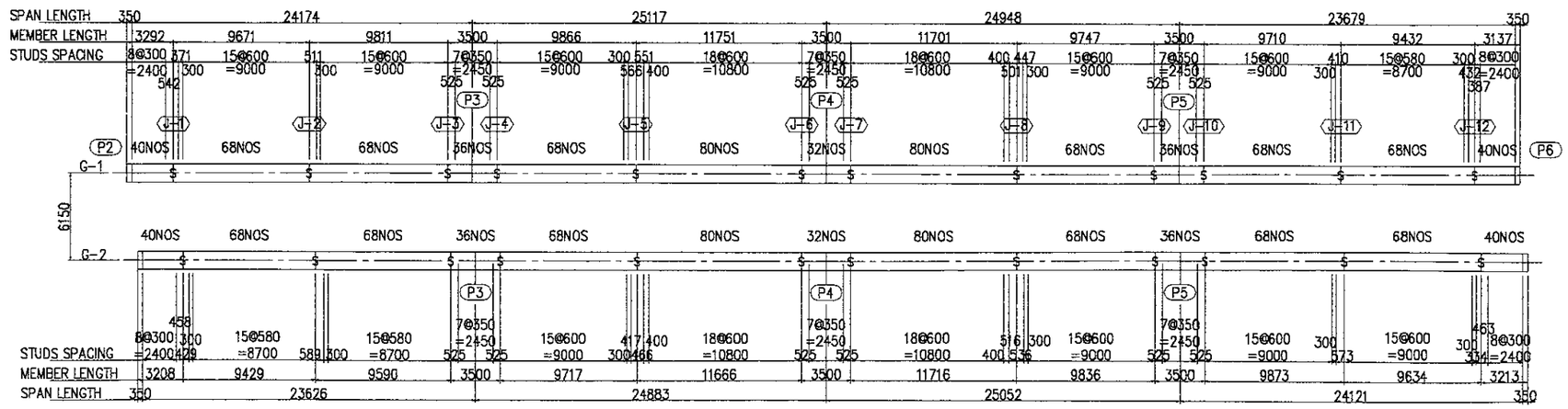

STUDS SPACING

SCALE : 1:400

JAPAN INTERNATIONAL COOPERATION AGENCY KATAHIRA & ENGINEERS INTERNATIONAL	DESIGNED BY	CHECKED BY	SUBMITTED BY	REPUBLIC OF INDONESIA MINISTRY OF PUBLIC WORKS DIRECTORATE GENERAL OF HIGHWAYS	PROJECT AND LOCATION :	SCALE :	DRAWING TITLE :	DRAWING NO :
	Name: S. MATSUI	Name: T. OKUMURA	Name: M. KIUCHI		DETAILED DESIGN STUDY OF NORTH JAVA CORRIDOR FLYOVER PROJECT TANGGULANGIN FLYOVER - CONTRACT PACKAGE 3 (PETERONGAN - TANGGULANGIN) EAST JAVA PROVINCE	1:50, 1:400	DECK SLAB ARRANGEMENT OF PC CABLES P2 - P6	TST-41
	Sign	Sign	Sign	APPROVED BY: Ir. HERRY VAZA M,Eng.Sc NIP. : 110038400 — Sign / Date		FULL SIZE A3		SHEET NO : 41 / 46
	Date	Date	Date					

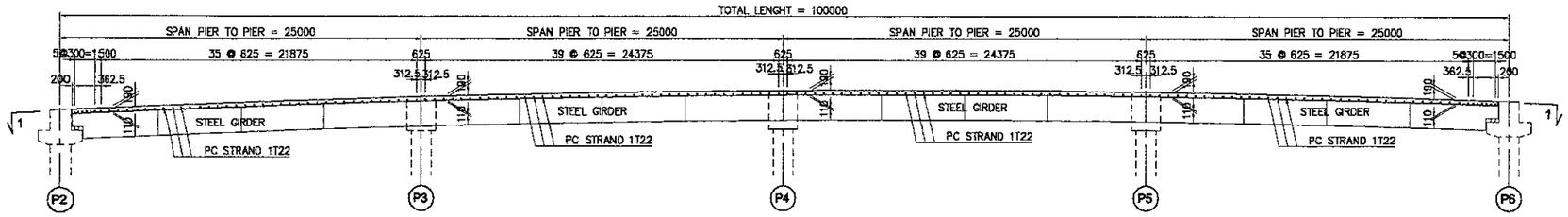

SIDE ELEVATION

SCALE : 1:400

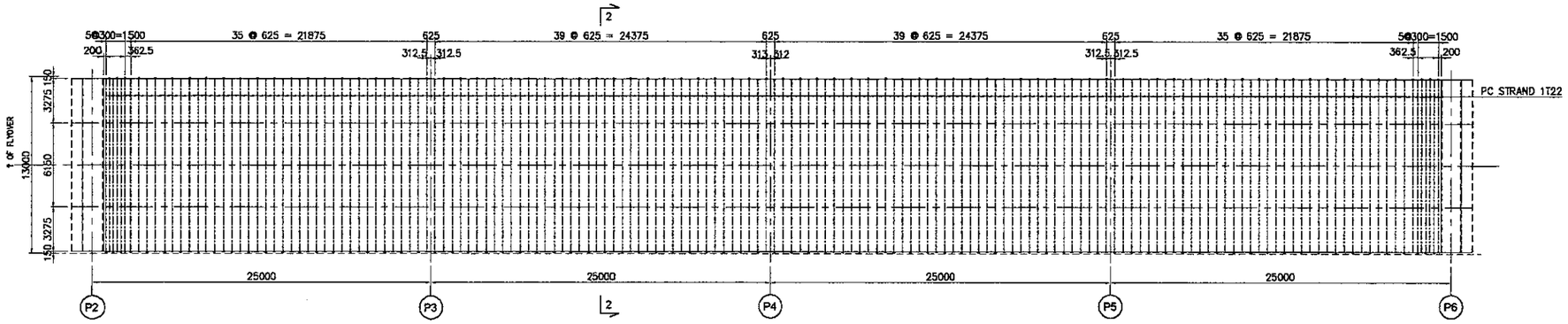

SECTION 1-1

SCALE : 1:400

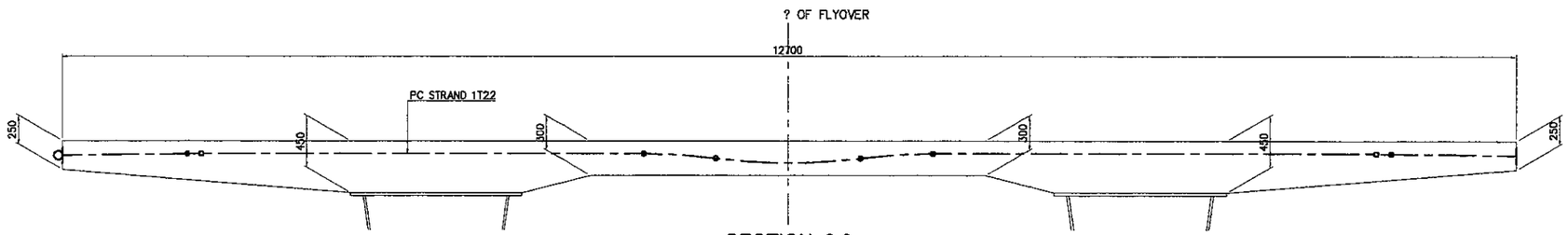

SECTION 2-2

SCALE : 1:50

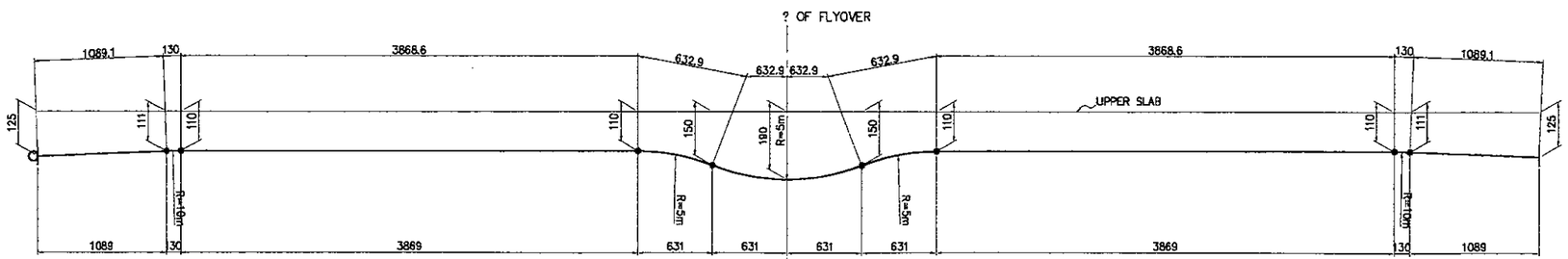

PC CABLE PROFILE

SCALE : 1:50

TABLE OF DECK SLAB PC CABLES 1T22 (Ø21.8 mm)

Length (m)	NOS	Unit Weight (kg / m)	Weight / 1 nos (kg)	Weight (kg)	Remarks
12.710	164	2.482	31.55	5.173.58	STRESSING ANCHORAGE ONE SIDE STAGERED
TOTAL LENGTH (L) = 2.084.44 m TOTAL WEIGHT (W) = 5.173.58 kg					

JICA JAPAN INTERNATIONAL COOPERATION AGENCY KEI KATAHIRA & ENGINEERS INTERNATIONAL	DESIGNED BY	CHECKED BY	SUBMITTED BY	REPUBLIC OF INDONESIA MINISTRY OF PUBLIC WORKS DIRECTORATE GENERAL OF HIGHWAYS	PROJECT AND LOCATION :	SCALE :	DRAWING TITLE :	DRAWING NO :
	Name S. MATSUI	Name T. OKUMURA	Name M. KIUCHI		DETAILED DESIGN STUDY OF NORTH JAVA CORRIDOR FLYOVER PROJECT TANGGULANGIN FLYOVER - CONTRACT PACKAGE 3 (PETERONGAN - TANGGULANGIN) EAST JAVA PROVINCE	1 : 50	DECK SLAB REINFORCEMENT ARRANGEMENT (1 OF 3)	TST-42
	Sign	Sign	Sign	APPROVED BY Ir. HERRY VAZA M.Eng.Sc NIP. : 110038400 Sign				SHEET NO :
	Date	Date	Date	Date		FULL SIZE A3		42 / 46

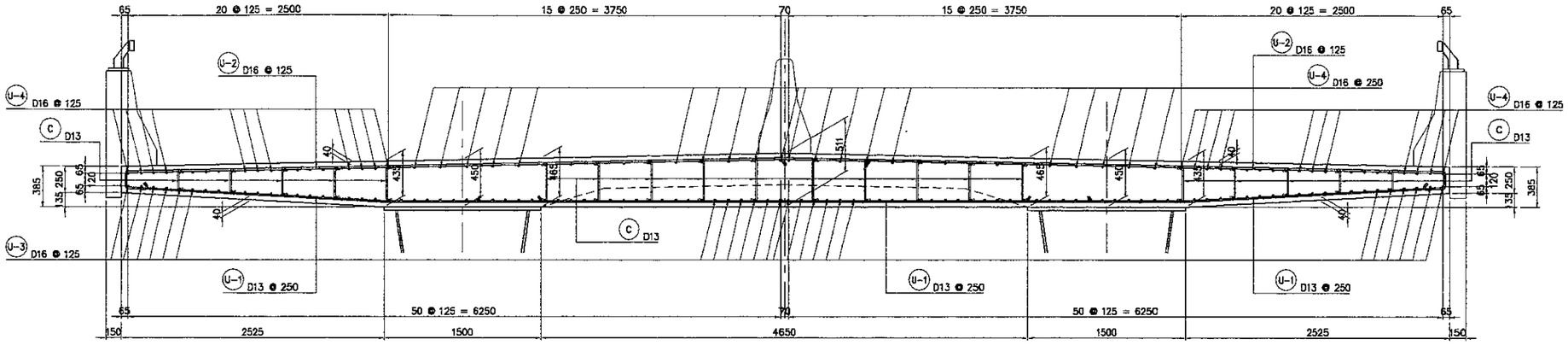

TYPICAL CROSS SECTION REINFORCEMENT AT EXP. JOINT

SCALE : 1:50

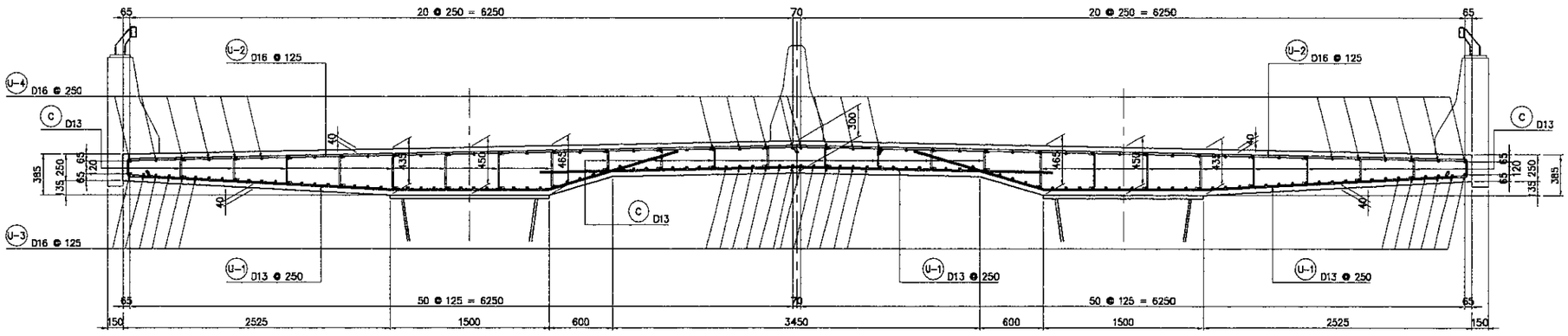

TYPICAL CROSS SECTION REINFORCEMENT AT MIDSPAN

SCALE : 1:50

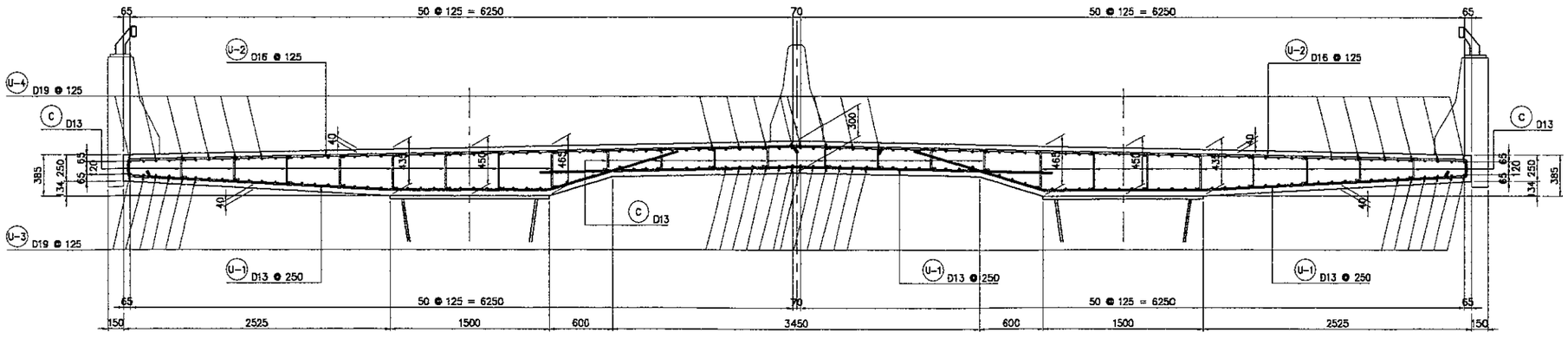

TYPICAL CROSS SECTION REINFORCEMENT AT PIER

SCALE : 1:50

TRANVERSAL REBAR,	LOWER	: U-1
	UPPER	: U-2
LONGITUDINAL REBAR,	LOWER	: U-3
	UPPER	: U-4
ERECTION REBAR		: C
REBAR CLEAR COVER		: 40 mm, ALL

NOTES :

1. ALL DIMENSION ARE IN MILLIMETER UNLESS NOTED OTHERWISE
2. CONCRETE , fc' = 35 MPa
3. REBARS, BJTD 40, fy = 400 MPa
4. THE CONTRACTOR SHALL BE RESPONSIBLE TO CARRY OUT THE FOLLOWING BEFORE CONSTRUCTION :
   - VERIFICATION OF ALL ELEVATIONS AND DIMENSIONS, USING ACTUAL FIELD SURVEY
   - PREPARATION AND SUBMISSION OF SHOP DRAWINGS FOR ALL BRIDGE COMPONENTS FOR THE ENGINEERS APPROVAL

JICA JAPAN INTERNATIONAL COOPERATION AGENCY KEI KATAHIRA & ENGINEERS INTERNATIONAL	DESIGNED BY	CHECKED BY	SUBMITTED BY	REPUBLIC OF INDONESIA MINISTRY OF PUBLIC WORKS DIRECTORATE GENERAL OF HIGHWAYS	PROJECT AND LOCATION :	SCALE :	DRAWING TITLE :	DRAWING NO :
	Name: S. MATSUI	Name: T. OKUMURA	Name: M. KIUCHI		DETAILED DESIGN STUDY OF NORTH JAVA CORRIDOR FLYOVER PROJECT TANGGULANGIN FLYOVER - CONTRACT PACKAGE 3 (PETERONGAN - TANGGULANGIN) EAST JAVA PROVINCE	1 : 50 1 : 200	DECK SLAB REINFORCEMENT ARRANGEMENT P2-P6 (2 OF 3)	TST-43
	Sign	Sign	Sign	APPROVED BY: Ir. HERRY VAZA M,Eng,Sc NIP. : 110038400 — Sign				SHEET NO : 43 / 46
	Date	Date	Date	Date		FULL SIZE A3		

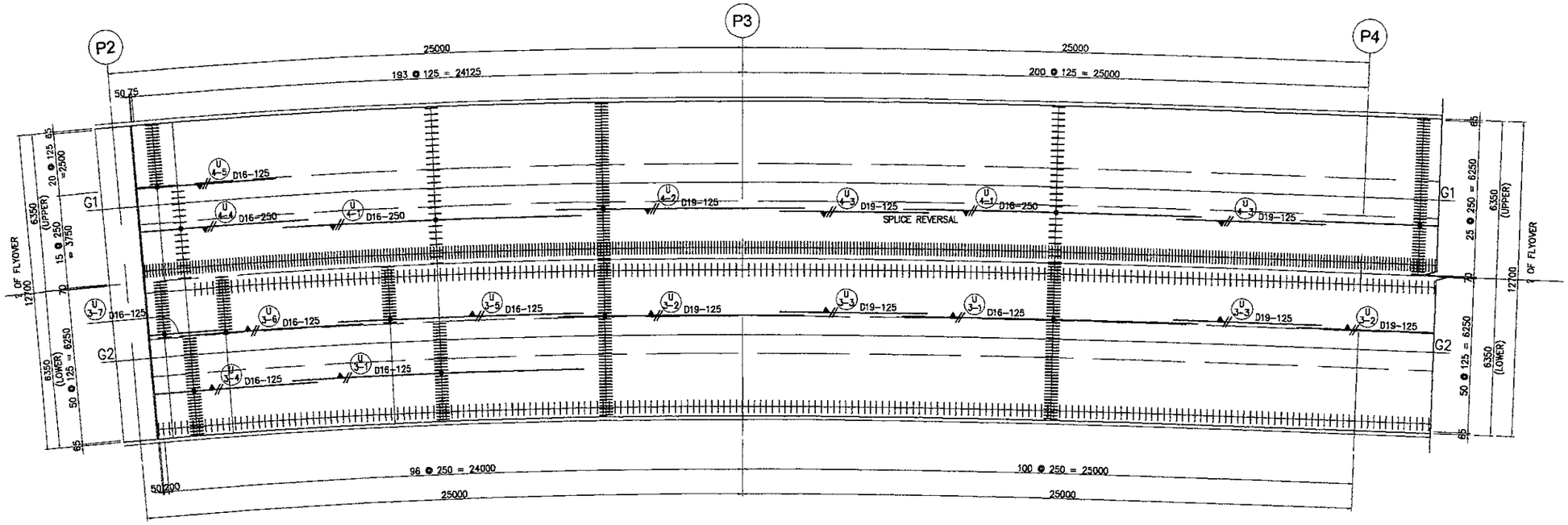

DECK SLAB REINFORCEMENT ARRANGEMENT P2 - P4

SCALE : 1:200

DECK POURING SEQUENCE :

TO CONTROL THE EFFECTS OF CONCRETE SHRINKAGE THE DECK IS TO BE POURED IN SECTIONS NOT EXCEEDING 30 METRES IN LENGTH WITH A MINIMUM SEVEN (7) DAY DELAY BETWEEN ADJOINING POURS. A STAGGERED SEQUENCE OF POURS MAY BE USED.

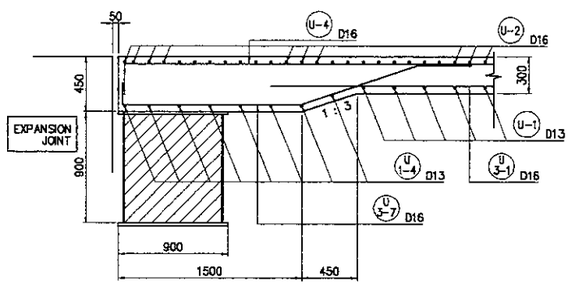

SECTION AT END SLAB THICKNESS

SCALE : 1:50

ERECTION BAR SPACING (3 NOS/Sq.m)

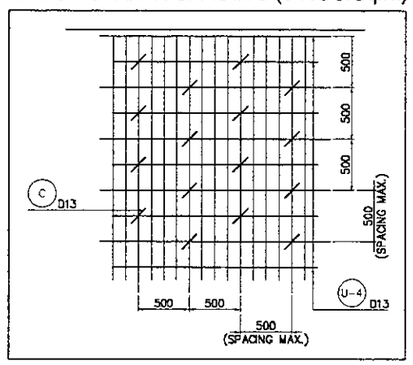

REBARS NOTATION :

- DENOTES TOP REBARS 1st LAYER
- DENOTES TOP REBARS 2nd LAYER
- DENOTES BOTTOM REBARS 1st LAYER
- DENOTES BOTTOM REBARS 2nd LAYER

CLEAR COVERS :

TOP : 40 MM
BOTTOM : 40 MM
SIDE : 40 MM

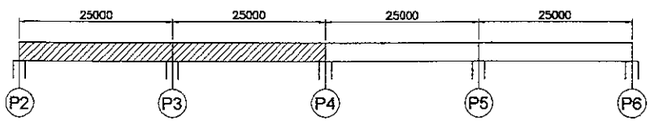

KEY PLAN

NOT TO SCALE

JICA JAPAN INTERNATIONAL COOPERATION AGENCY / KEI KATAHIRA & ENGINEERS INTERNATIONAL	DESIGNED BY	CHECKED BY	SUBMITTED BY	REPUBLIC OF INDONESIA MINISTRY OF PUBLIC WORKS DIRECTORATE GENERAL OF HIGHWAYS	PROJECT AND LOCATION :	SCALE :	DRAWING TITLE :	DRAWING NO :
	Name: S. MATSUI	Name: T. OKUMURA	Name: M. KIUCHI		DETAILED DESIGN STUDY OF NORTH JAVA CORRIDOR FLYOVER PROJECT TANGGULANGIN FLYOVER - CONTRACT PACKAGE 3 (PETERONGAN - TANGGULANGIN) EAST JAVA PROVINCE	1 : 50 1 : 200	DECK SLAB REINFORCEMENT ARRANGEMENT P2-P6 (3 OF 3)	TST-44
	Sign	Sign	Sign	APPROVED BY: Ir. HERRY VAZA M.Eng.Sc NIP. : 110038400		FULL SIZE A3		SHEET NO : 44 / 46
	Date	Date	Date	Sign / Date				

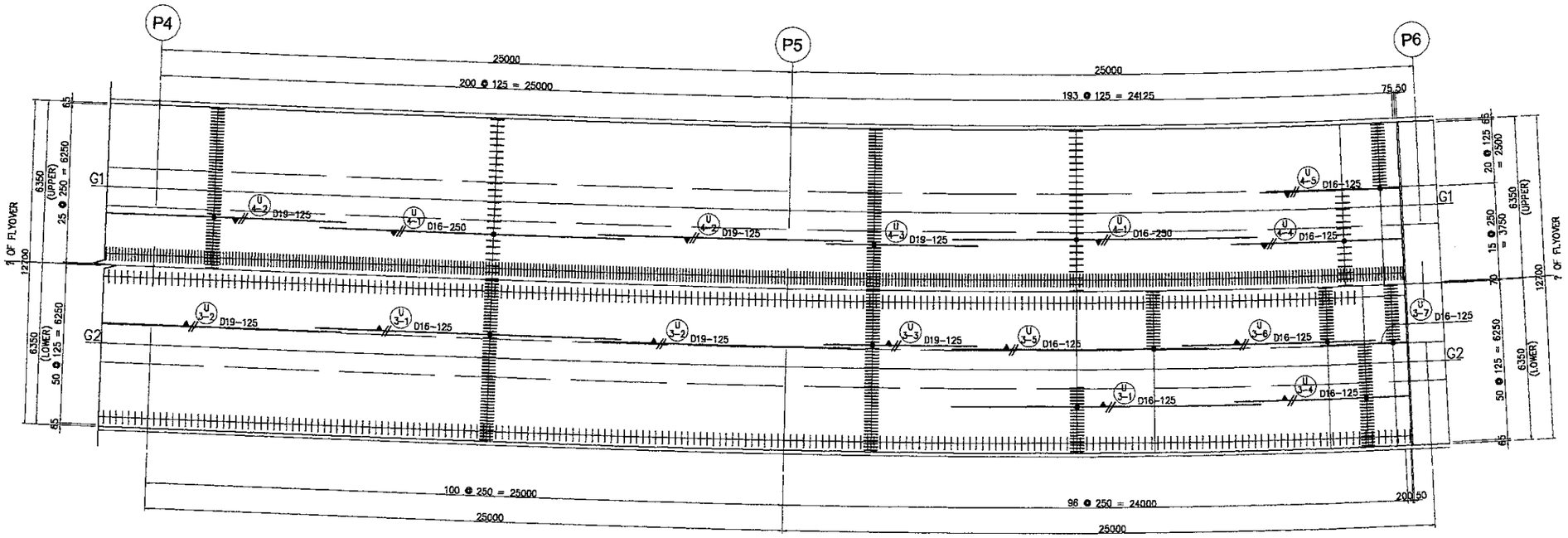

DECK SLAB REINFORCEMENT ARRANGEMENT P4- P6

SCALE : 1:200

DECK POURING SEQUENCE :

TO CONTROL THE EFFECTS OF CONCRETE SHRINKAGE THE DECK IS TO BE POURED IN SECTIONS NOT EXCEEDING 30 METRES IN LENGTH WITH A MINIMUM SEVEN (7) DAY DELAY BETWEEN ADJOINING POURS. A STAGGERED SEQUENCE OF POURS MAY BE USED.

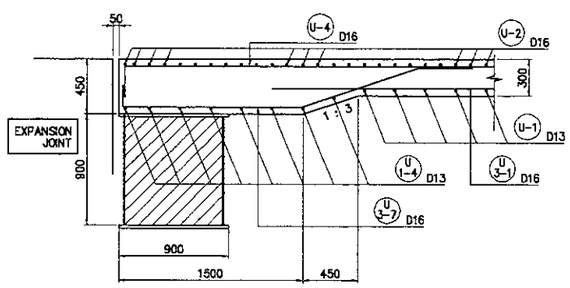

SECTION AT END SLAB THICKNESS

SCALE : 1:50

ERECTION BAR SPACING (3 NOS/Sq.m)

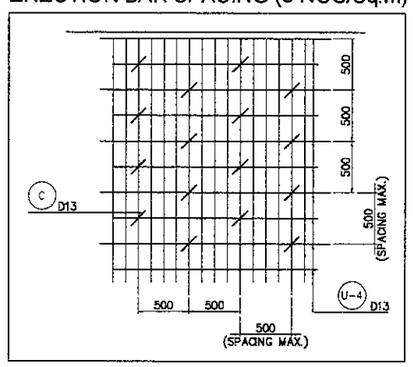

REBARS NOTATION :

- DENOTES TOP REBARS 1st LAYER
- DENOTES TOP REBARS 2nd LAYER
- DENOTES BOTTOM REBARS 1st LAYER
- DENOTES BOTTOM REBARS 2nd LAYER

CLEAR COVERS :

TOP : 40 MM
BOTTOM : 40 MM
SIDE : 40 MM

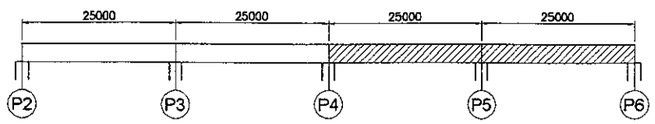

KEY PLAN

NOT TO SCALE

JICA JAPAN INTERNATIONAL COOPERATION AGENCY	DESIGNED BY	CHECKED BY	SUBMITTED BY	REPUBLIC OF INDONESIA MINISTRY OF PUBLIC WORKS DIRECTORATE GENERAL OF HIGHWAYS	PROJECT AND LOCATION :	SCALE :	DRAWING TITLE :	DRAWING NO :
KEI KATAHIRA & ENGINEERS INTERNATIONAL	Name S. MATSUI	Name T. OKUMURA	Name M. KIUCHI	APPROVED BY Ir. HERRY VAZA M,Eng.Sc NIP. : 110038400	DETAILED DESIGN STUDY OF NORTH JAVA CORRIDOR FLYOVER PROJECT TANGGULANGIN FLYOVER - CONTRACT PACKAGE 3 (PETERONGAN - TANGGULANGIN) EAST JAVA PROVINCE	NOT TO SCALE	DECK SLAB REINFORCEMENT SCHEDULE P2-P6 (1 OF 2)	TST-45
	Sign	Sign	Sign	Sign		FULL SIZE A3		SHEET NO : 45 / 46
	Date	Date	Date	Date				

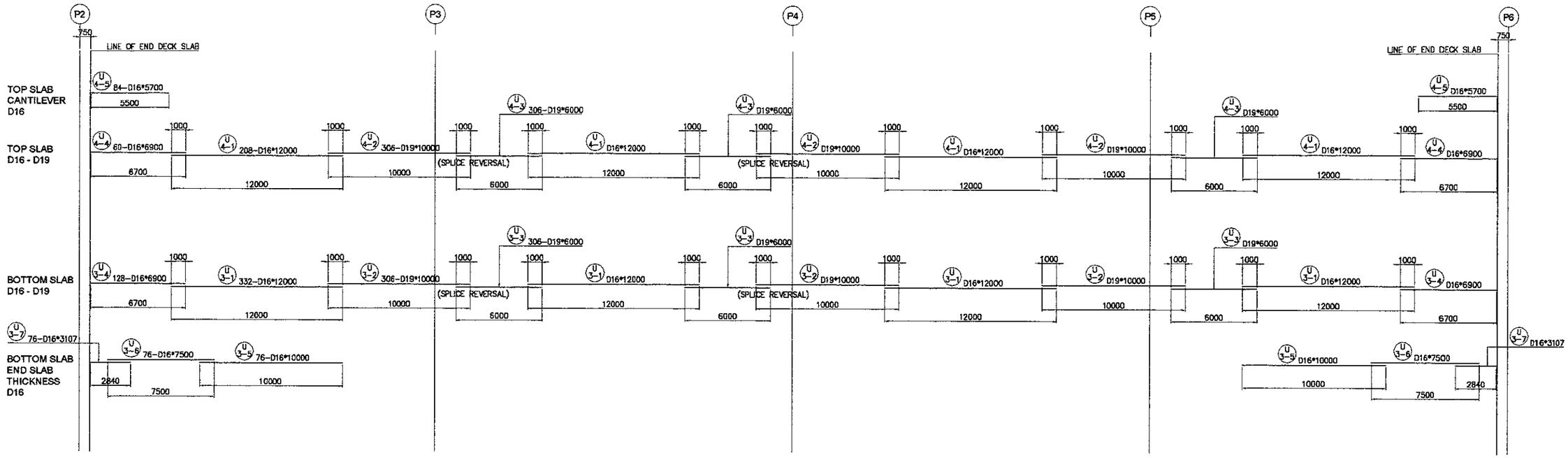

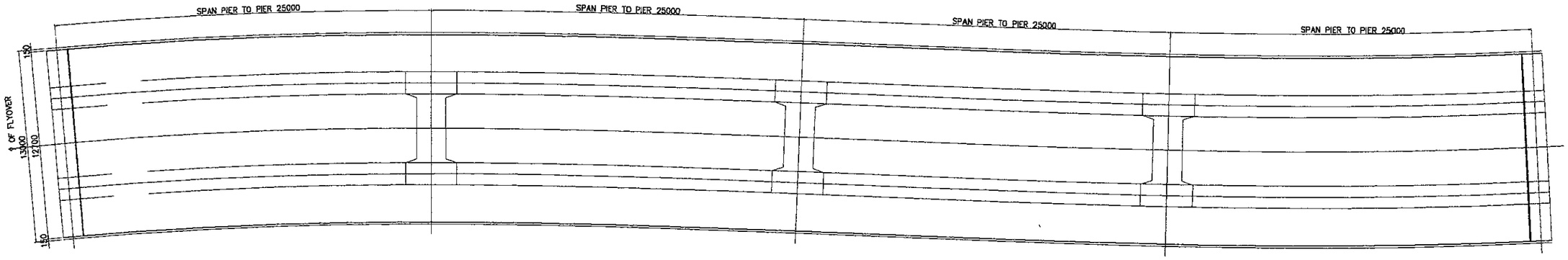

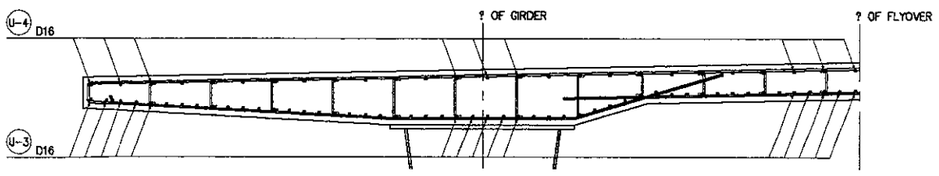

SPLICE LENGTH

TRANVERSAL	D13: 600
	D16: 800
LONGITUDINAL	D16 to D19: 1000

STANDARD HOOKS

BENDING ANGLE OF REBARS	FIGURE	DIAMETER OF REBARS	DIAMETER OF BEND OF REBARS OUT TO OUT	STRAIGHT EXTENSION LENGTH
90°	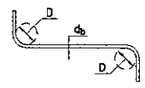	D10 TO 16 GENERAL	6 db	6 db
		D10 TO 16 STIRRUP AND TIES	4 db	6 db
		D32	6 db	12 db
135°	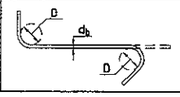	D10 to D25	8 db	6 db

JAPAN INTERNATIONAL COOPERATION AGENCY KATAHIRA & ENGINEERS INTERNATIONAL	DESIGNED BY	CHECKED BY	SUBMITTED BY	REPUBLIC OF INDONESIA MINISTRY OF PUBLIC WORKS DIRECTORATE GENERAL OF HIGHWAYS	PROJECT AND LOCATION :	SCALE :	DRAWING TITLE :	DRAWING NO :
	Name: S. MATSUI	Name: T. OKUMURA	Name: M. KIUCHI		DETAILED DESIGN STUDY OF NORTH JAVA CORRIDOR FLYOVER PROJECT TANGGULANGIN FLYOVER - CONTRACT PACKAGE 3 (PETERONGAN - TANGGULANGIN) EAST JAVA PROVINCE	NOT TO SCALE	DECK SLAB REINFORCEMENT SCHEDULE P2-P6 (2 OF 2)	TST-46
	Sign	Sign	Sign	APPROVED BY: Ir. HERRY VAZA M.Eng.Sc NIP. : 110038400		FULL SIZE A3		SHEET NO : 46 / 46
	Date	Date	Date	Sign / Date				

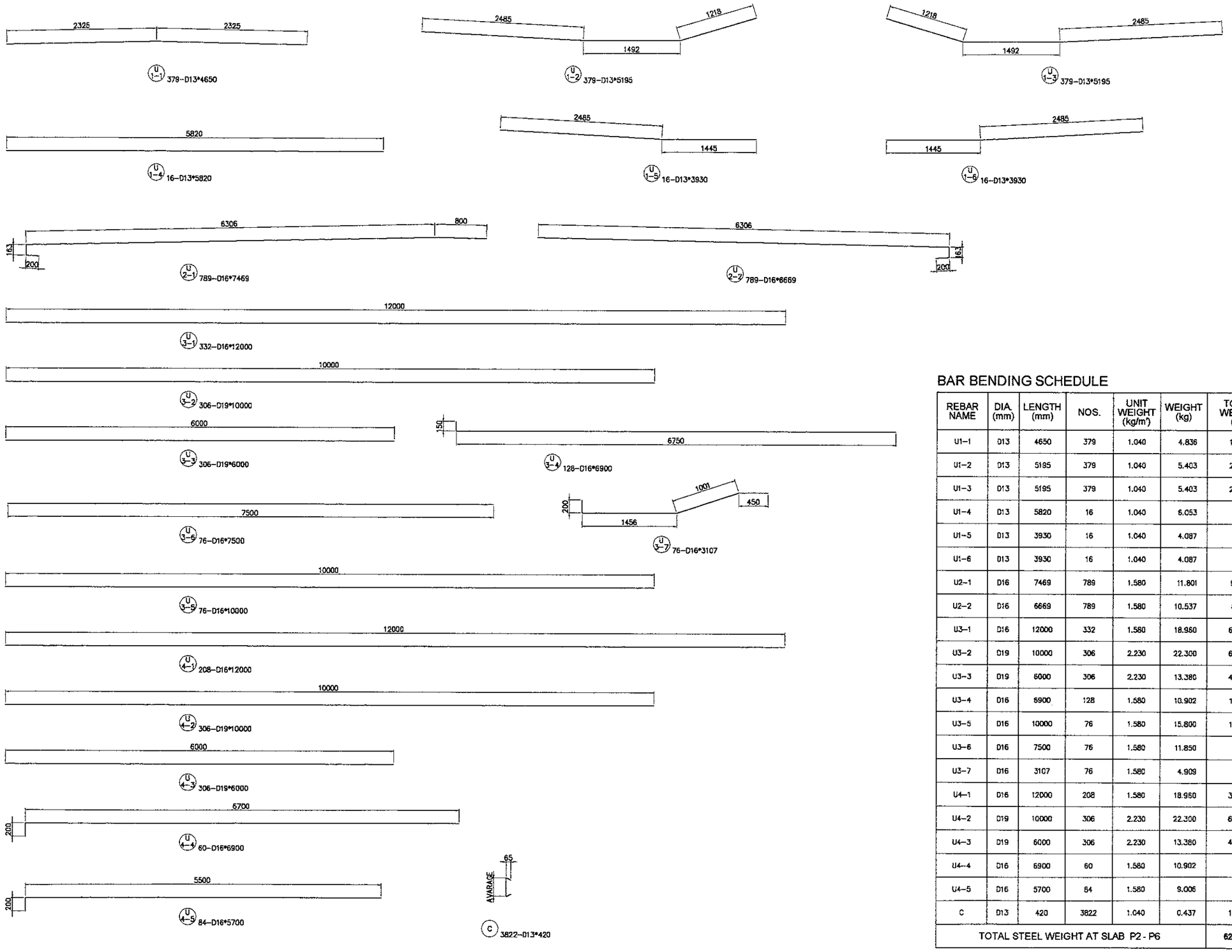

BAR BENDING SCHEDULE

REBAR NAME	DIA. (mm)	LENGTH (mm)	NOS.	UNIT WEIGHT (kg/m')	WEIGHT (kg)	TOTAL WEIGHT (kg)	DIAGRAM	REMARKS
U1-1	D13	4650	379	1.040	4.836	1832.84		
U1-2	D13	5195	379	1.040	5.403	2047.66		
U1-3	D13	5195	379	1.040	5.403	2047.66		
U1-4	D13	5820	16	1.040	6.053	96.84		
U1-5	D13	3930	16	1.040	4.087	65.40		
U1-6	D13	3930	16	1.040	4.087	65.40		
U2-1	D16	7469	789	1.580	11.801	9311.00		
U2-2	D16	6669	789	1.580	10.537	8313.71		
U3-1	D16	12000	332	1.580	18.960	6294.72		
U3-2	D19	10000	306	2.230	22.300	6823.80		
U3-3	D19	6000	306	2.230	13.380	4094.28		
U3-4	D16	6900	128	1.580	10.902	1395.46		
U3-5	D16	10000	76	1.580	15.800	1200.80		
U3-6	D16	7500	76	1.580	11.850	900.60		
U3-7	D16	3107	76	1.580	4.909	373.09		
U4-1	D16	12000	208	1.580	18.960	3943.68		
U4-2	D19	10000	306	2.230	22.300	6823.80		
U4-3	D19	6000	306	2.230	13.380	4094.28		
U4-4	D16	6900	60	1.580	10.902	654.12		
U4-5	D16	5700	84	1.580	9.006	756.50		
C	D13	420	3822	1.040	0.437	1669.45		AVERAGE LENGTH
TOTAL STEEL WEIGHT AT SLAB P2 - P6						62805.09		

JAPAN INTERNATIONAL
COOPERATION AGENCY

DIRECTORATE GENERAL OF HIGHWAY
MINISTRY OF PUBLIC WORKS
REPUBLIC OF INDONESIA

CONCRETE SUPERSTRUCTURE

KATAHIRA & ENGINEERS INTERNATIONAL

JICA JAPAN INTERNATIONAL COOPERATION AGENCY / KEI KATAHIRA & ENGINEERS INTERNATIONAL	DESIGNED BY	CHECKED BY	SUBMITTED BY	REPUBLIC OF INDONESIA MINISTRY OF PUBLIC WORKS DIRECTORATE GENERAL OF HIGHWAYS	PROJECT AND LOCATION :	SCALE :	DRAWING TITLE :	DRAWING NO :
	Name: H. HONDA	Name: T. OKUMURA	Name: M. KIUCHI		DETAILED DESIGN STUDY OF NORTH JAVA CORRIDOR FLYOVER PROJECT TANGGULANGIN FLYOVER - CONTRACT PACKAGE 3 (PETERONGAN - TANGGULANGIN) EAST JAVA PROVINCE	1 : 250 / 1 : 200	COORDINATES AND ELEVATION FOR PC GIRDER A1~P2	TCL-001
	Sign	Sign	Sign	APPROVED BY: Ir. HERRY VAZA M.Eng.Sc NIP. : 110038400				SHEET NO :
	Date	Date	Date	Sign / Date		FULL SIZE A3		01 / 18

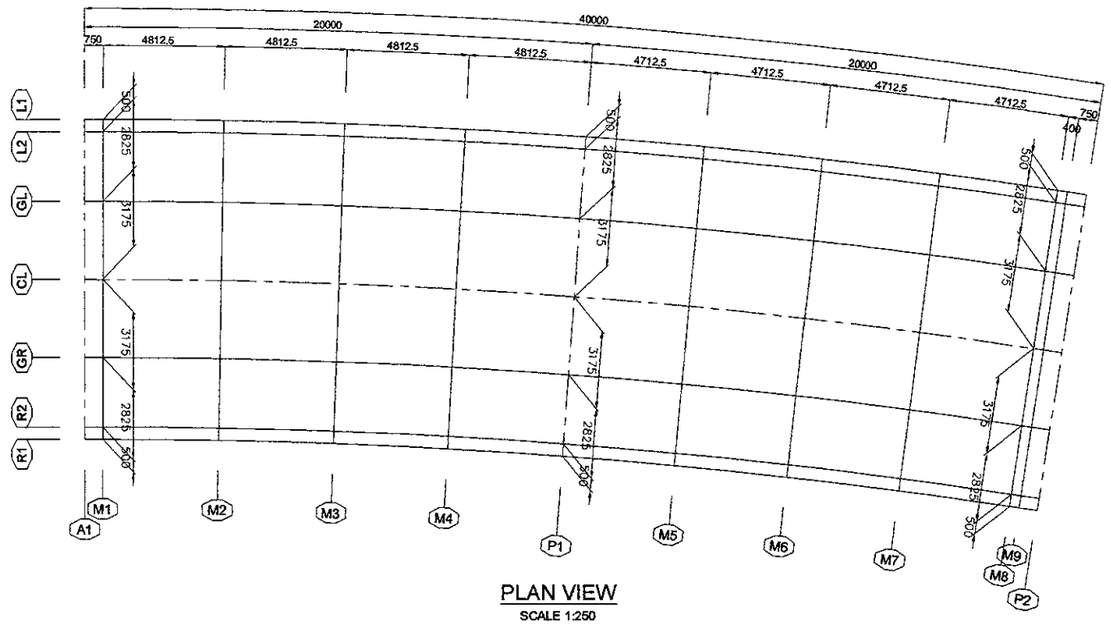

PLAN VIEW

SCALE 1:250

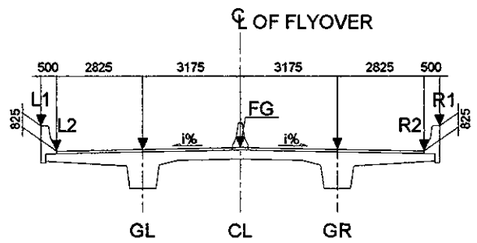

SECTION VIEW

SCALE 1:200

LIST OF COORDINATES

LABEL	STA	A1	M1	M2	M3	M4	P1	M5	M6	M7	M8	M9	P2
		0+542.0000	0+542.7500	0+547.5625	0+552.3750	0+557.1875	0+562.0000	0+566.7125	0+571.4250	0+576.1375	0+580.8500	0+581.2500	0+582.0000
L1	E	688415.4410	688415.5857	688416.5580	688417.6163	688418.7675	688420.0108	688421.3173	688422.7112	688424.1922	688425.7596	688425.8967	688426.1552
	N	9169468.5672	9169469.3173	9169474.1335	9169478.9512	9169483.7527	9169488.5311	9169493.1862	9169497.8159	9169502.4184	9169506.9922	9169507.3791	9169508.1039
	Z	11.0930	11.1365	11.4156	11.6838	11.9244	12.1650	12.4006	12.6355	12.8584	13.0655	13.0823	13.1136
L2	E	688415.9321	688416.0786	688417.0473	688418.1036	688419.2526	688420.4935	688421.7974	688423.1886	688424.6667	688426.2311	688426.3678	688426.6259
	N	9169468.4730	9169469.2221	9169474.0307	9169478.8393	9169483.6314	9169488.4005	9169493.0466	9169497.6672	9169502.2608	9169506.8257	9169507.2118	9169507.9351
	Z	10.2680	10.3115	10.5906	10.8588	11.0994	11.3400	11.5756	11.8105	12.0334	12.2405	12.2573	12.2886
GL	E	688418.7065	688418.8499	688419.8119	688420.8570	688421.9932	688423.2205	688424.5100	688425.8859	688427.3476	688428.8948	688429.0300	688429.2852
	N	9169467.9408	9169468.6839	9169473.4495	9169478.2071	9169482.9464	9169487.6629	9169492.2576	9169496.8273	9169501.3702	9169505.8847	9169506.2665	9169506.9819
	Z	10.1607	10.2013	10.4623	10.7176	10.9582	11.1988	11.4344	11.6693	11.8922	12.0993	12.1161	12.1474
CL	E	688421.8246	688421.9667	688422.9189	688423.9515	688425.0735	688426.2853	688427.5587	688428.9173	688430.3607	688431.8885	688432.0220	688432.2740
	N	9169467.3426	9169468.0790	9169472.7963	9169477.4967	9169482.1765	9169486.8338	9169491.3710	9169495.8833	9169500.3692	9169504.8271	9169505.2042	9169505.9106
	Z	10.0400	10.0775	10.3181	10.5588	10.7994	11.0400	11.2756	11.5105	11.7334	11.9405	11.9573	11.9886
GR	E	688424.9428	688425.0836	688426.0260	688427.0460	688428.1537	688429.3502	688430.6073	688431.9487	688433.3738	688434.8821	688435.0140	688435.2628
	N	9169466.7444	9169467.4741	9169472.1431	9169476.7862	9169481.4066	9169486.0048	9169490.4843	9169494.9393	9169499.3683	9169503.7696	9169504.1418	9169504.8392
	Z	9.9194	9.9537	10.1739	10.4001	10.6407	10.8813	11.1169	11.3518	11.5747	11.7818	11.7986	11.8299
R2	E	688427.7172	688427.8568	688428.7906	688429.7993	688430.8944	688432.0772	688433.3199	688434.6460	688436.0547	688437.5458	688437.6761	688437.9221
	N	9169466.2122	9169466.9360	9169471.5620	9169476.1540	9169480.7215	9169485.2671	9169489.6953	9169494.0994	9169498.4776	9169502.8286	9169503.1966	9169503.8860
	Z	9.8120	9.8435	10.0456	10.2588	10.4994	10.7400	10.9756	11.2105	11.4334	11.6405	11.6573	11.6886
R1	E	688428.2082	688428.3477	688429.2799	688430.2867	688431.3795	688432.5598	688433.8000	688435.1233	688436.5292	688438.0173	688438.1473	688438.3928
	N	9169466.1180	9169466.8407	9169471.4591	9169476.0421	9169480.6003	9169485.1365	9169489.5557	9169493.9507	9169498.3200	9169502.6620	9169503.0293	9169503.7173
	Z	10.6370	10.6685	10.8706	11.0838	11.3244	11.5650	11.8006	12.0355	12.2584	12.4655	12.4823	12.5136

JICA JAPAN INTERNATIONAL COOPERATION AGENCY / KEI KATAHIRA & ENGINEERS INTERNATIONAL	DESIGNED BY	CHECKED BY	SUBMITTED BY	REPUBLIC OF INDONESIA MINISTRY OF PUBLIC WORKS DIRECTORATE GENERAL OF HIGHWAYS	PROJECT AND LOCATION :	SCALE :	DRAWING TITLE :	DRAWING NO :
	Name: H. HONDA	Name: T. OKUMURA	Name: N. KIUCHI		DETAILED DESIGN STUDY OF NORTH JAVA CORRIDOR FLYOVER PROJECT TANGGULANGIN FLYOVER - CONTRACT PACKAGE 3 (PETERONGAN - TANGGULANGIN) EAST JAVA PROVINCE	NOT TO SCALE	QUANTITIES SUMMARY FOR PC SUPERSTRUCTURE A1~P2, P6~A2	TCL-002
	Sign	Sign	Sign	APPROVED BY: Ir. HERRY VAZA M,Eng.Sc NIP. : 110038400				SHEET NO :
	Date	Date	Date	Sign / Date		FULL SIZE A3		02 / 18

QUANTITY SUMMARY FOR PC SUPERSTRUCTURE

NO.		UNIT	QUANTITY	NOTES
1	CONCRETE f'c = 35 MPa	m^3	681.40	
2	PC CABLE DECK SLAB	kg	4,858.12	
3	DEAD END ANCHORAGE PC DECK SLAB	pcs	154	
4	STRESSING ANCHORAGE PC DECK SLAB	pcs	154	
5	PC CABLE PPC GIRDER	kg	14,163.33	
6	DEAD END ANCHORAGE PPC GIRDER	pcs	30	
7	STRESSING ANCHORAGE PPC GIRDER	pcs	30	
8	COUPLER	pcs	24	
9	REBAR	ton	–	
10	WATERPROOFING	m^2		
11	PAVEMENT	m^2	–	HIGHWAY PORTION

JICA JAPAN INTERNATIONAL COOPERATION AGENCY / KEI KATAHIRA & ENGINEERS INTERNATIONAL	DESIGNED BY	CHECKED BY	SUBMITTED BY	REPUBLIC OF INDONESIA MINISTRY OF PUBLIC WORKS DIRECTORATE GENERAL OF HIGHWAYS	PROJECT AND LOCATION :	SCALE :	DRAWING TITLE :	DRAWING NO :
	Name: H. HONDA	Name: T. OKUMURA	Name: M. KIUCHI		DETAILED DESIGN STUDY OF NORTH JAVA CORRIDOR FLYOVER PROJECT TANGGULANGIN FLYOVER - CONTRACT PACKAGE 3 (PETERONGAN -TANGGULANGIN) EAST JAVA PROVINCE	1 : 200 1 : 100	DIMENSION PLAN OF PC SUPERSTRUCTURE A1 - P2	TCL-003
	Sign:	Sign:	Sign:	APPROVED BY: Ir. HERRY VAZA M,Eng.Sc NIP. : 110038400		FULL SIZE A3		SHEET NO : 03 / 18
	Date:	Date:	Date:	Sign: / Date:				

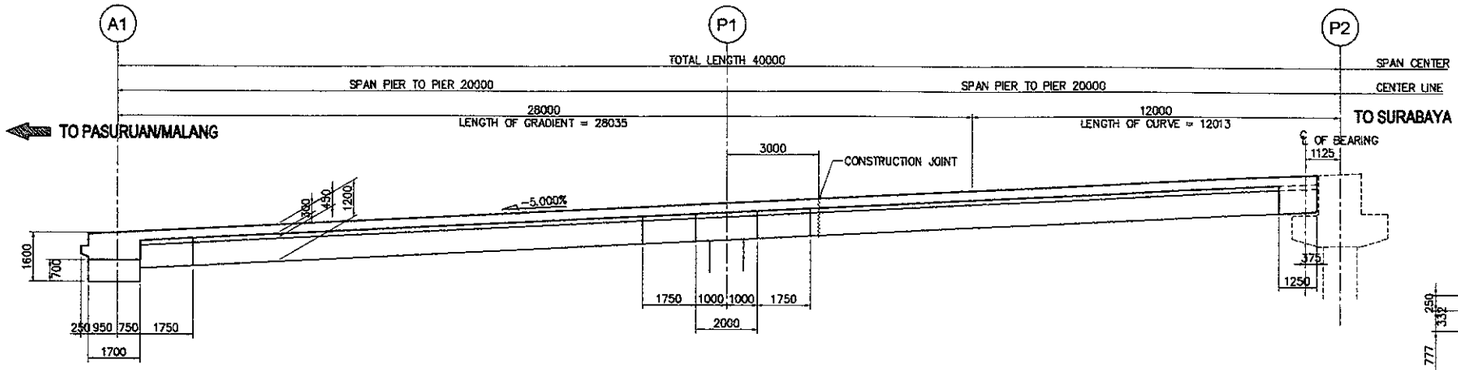

SIDE ELEVATION
SCALE 1 : 200

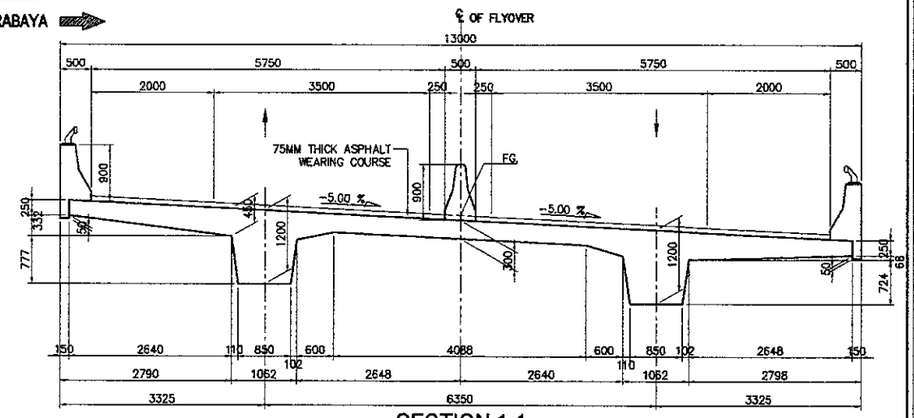

SECTION 1-1
SCALE 1 : 100

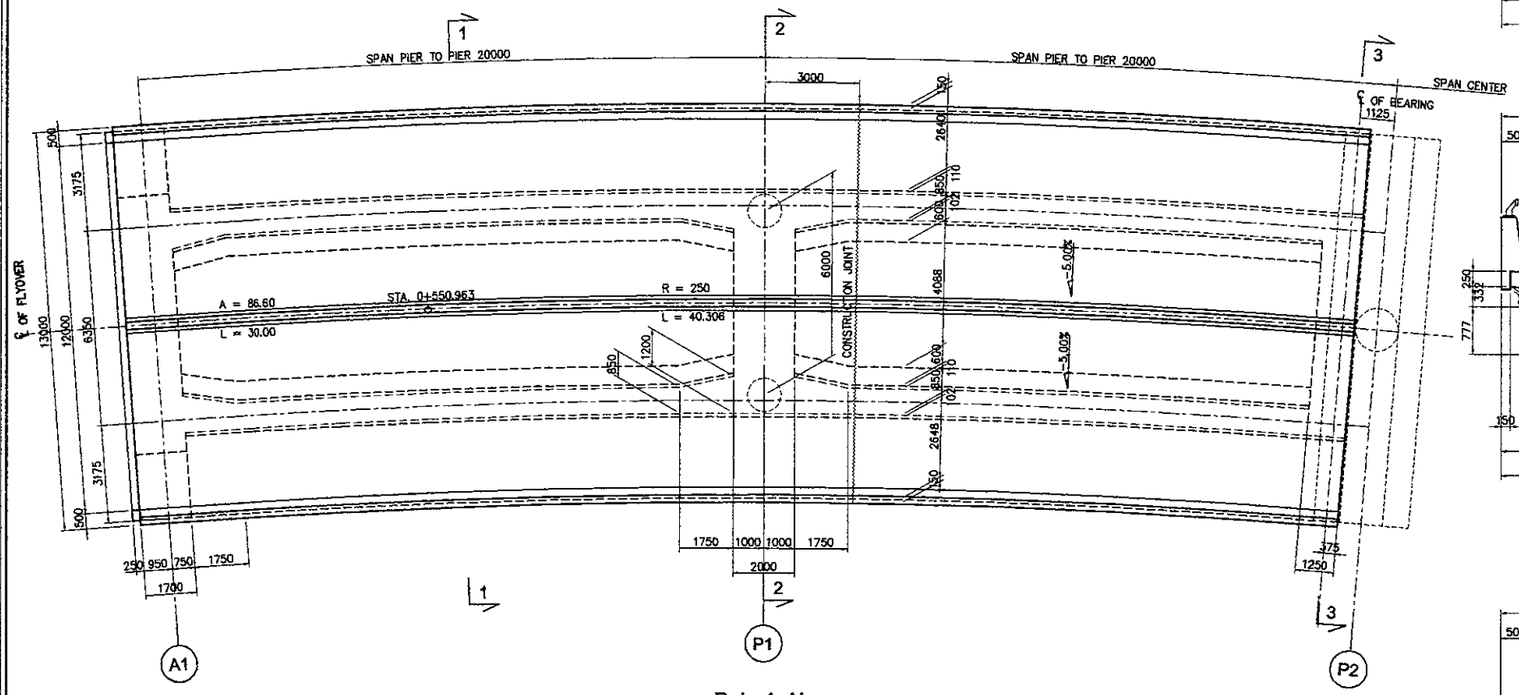

P L A N
SCALE 1 : 200

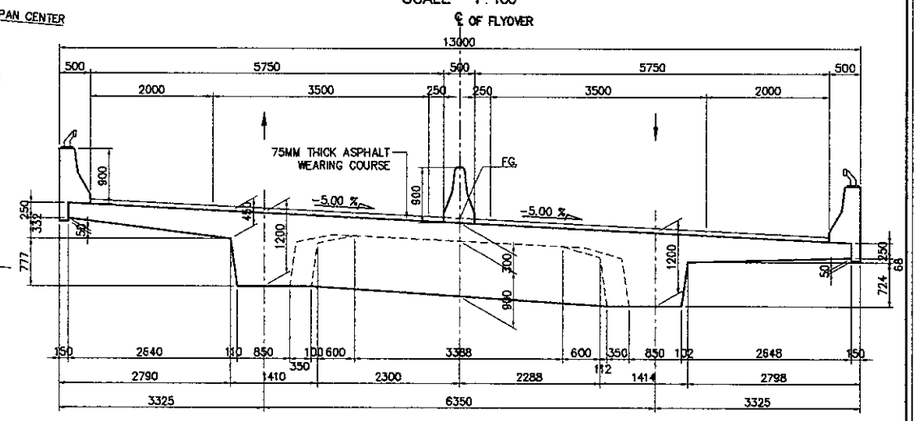

SECTION 2-2
SCALE 1 : 100

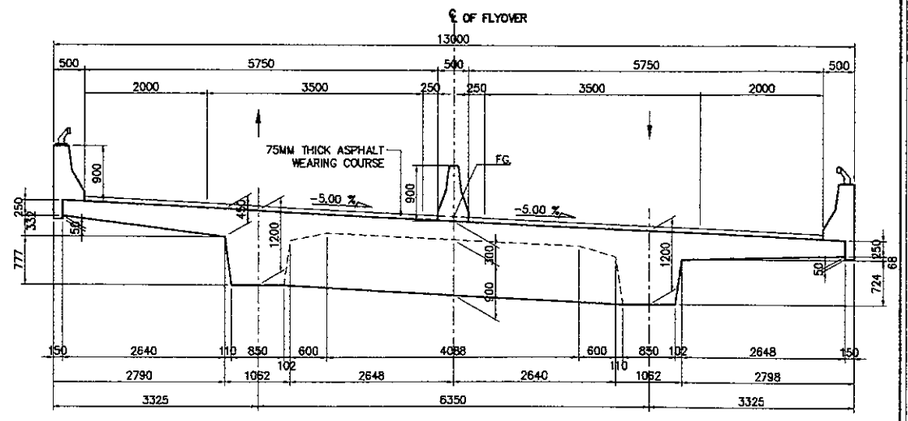

SECTION 3-3
SCALE 1 : 100

NOTES :

1. All dimension are in mm unless noted otherwise.
2. Concrete Girder and Slab fc'= 35 MPa.
3. All Reinforcing steel shall be BJTD 40 or ASTM A615 Grade 60 deformed bars.
4. The Contractor shall be responsible to carry out the following before Construction :
   a) Verification of all elevations and dimensions, using actual field survey.
   b) Preparation and submission of shop drawings for all bridge components for the Engineer's approval.

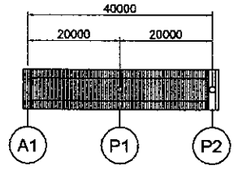

KEY PLAN

JICA JAPAN INTERNATIONAL COOPERATION AGENCY / KEI KATAHIRA & ENGINEERS INTERNATIONAL	DESIGNED BY	CHECKED BY	SUBMITTED BY	REPUBLIC OF INDONESIA MINISTRY OF PUBLIC WORKS DIRECTORATE GENERAL OF HIGHWAYS	PROJECT AND LOCATION :	SCALE :	DRAWING TITLE :	DRAWING NO :
	Name: H. HONDA	Name: T. OKUMURA	Name: M. KIUCHI		DETAILED DESIGN STUDY OF NORTH JAVA CORRIDOR FLYOVER PROJECT TANGGULANGIN FLYOVER - CONTRACT PACKAGE 3 (PETERONGAN -TANGGULANGIN) EAST JAVA PROVINCE	1 : 50	TYPICAL CROSS SECTION A1 - P2	TCL-004
	Sign	Sign	Sign	APPROVED BY: Ir. HERRY VAZA M,Eng.Sc NIP. : 110038400		FULL SIZE A3		SHEET NO : 04 / 18
	Date	Date	Date	Sign / Date				

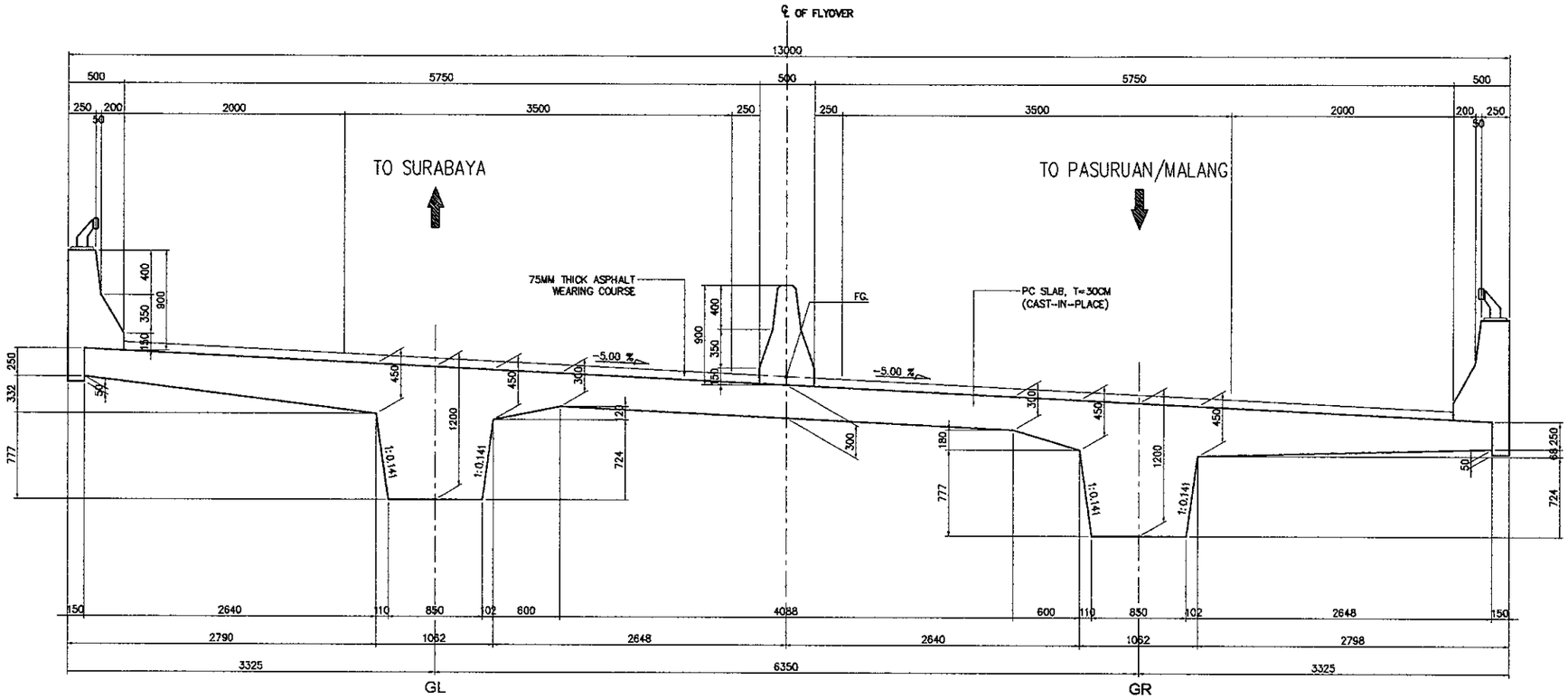

INFORMATION OF PC SUPERSTUCTURE

	A1	P1	P2'
FG.	10.040	11.040	11.942
Super Elev. GL	3.800%	5.000%	5.000%
Super Elev. GR	−3.800%	−5.000%	−5.000%
Top Slab Girder GL	10.086	11.124	12.026
Top Slab Girder GR	9.844	10.806	11.708
Bottom GL	8.411	9.849	10.751
Bottom GR	8.169	9.531	10.433
Station	0+542.000	0+562.000	0+580.875

TYPICAL CROSS SECTION
(Span Length = 20 M)

SCALE : 1 : 50

JICA JAPAN INTERNATIONAL COOPERATION AGENCY / KATAHIRA & ENGINEERS INTERNATIONAL	DESIGNED BY	CHECKED BY	SUBMITTED BY	REPUBLIC OF INDONESIA MINISTRY OF PUBLIC WORKS DIRECTORATE GENERAL OF HIGHWAYS	PROJECT AND LOCATION :	SCALE :	DRAWING TITLE :	DRAWING NO :
	Name: H. HONDA	Name: T. OKUMURA	Name: M. KIUCHI		DETAILED DESIGN STUDY OF NORTH JAVA CORRIDOR FLYOVER PROJECT TANGGULANGIN FLYOVER - CONTRACT PACKAGE 3 (PETERONGAN -TANGGULANGIN) EAST JAVA PROVINCE	1 : 200 / 1 : 100	ARRANGEMENT OF PC CABLES A1 - P2 (1 OF 2)	TCL-005
	Sign	Sign	Sign	APPROVED BY: Ir. HERRY VAZA M,Eng.Sc NIP. : 110038400		FULL SIZE A3		SHEET NO : 05 / 18
	Date	Date	Date	Sign / Date				

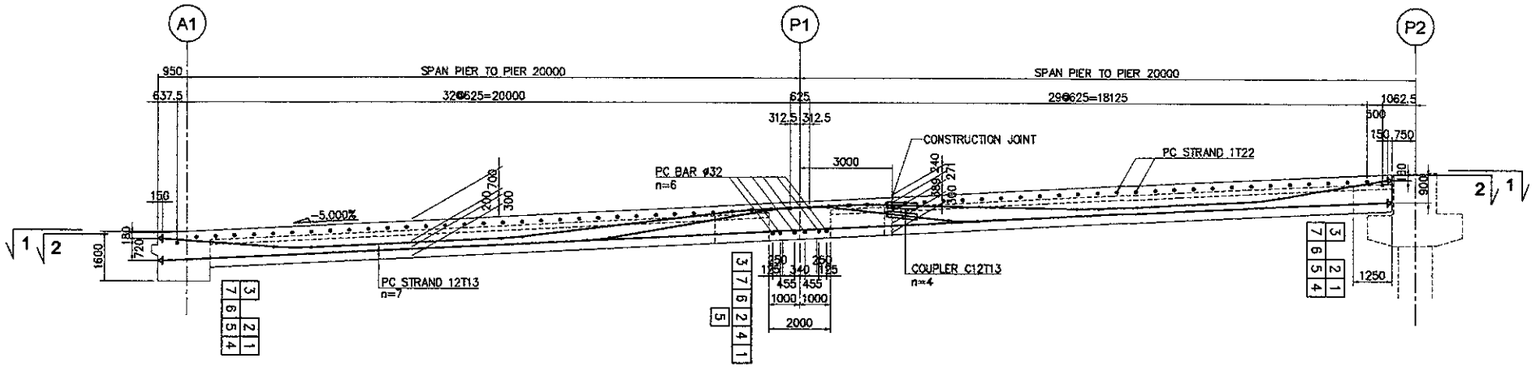

SIDE ELEVATION
SCALE 1 : 200

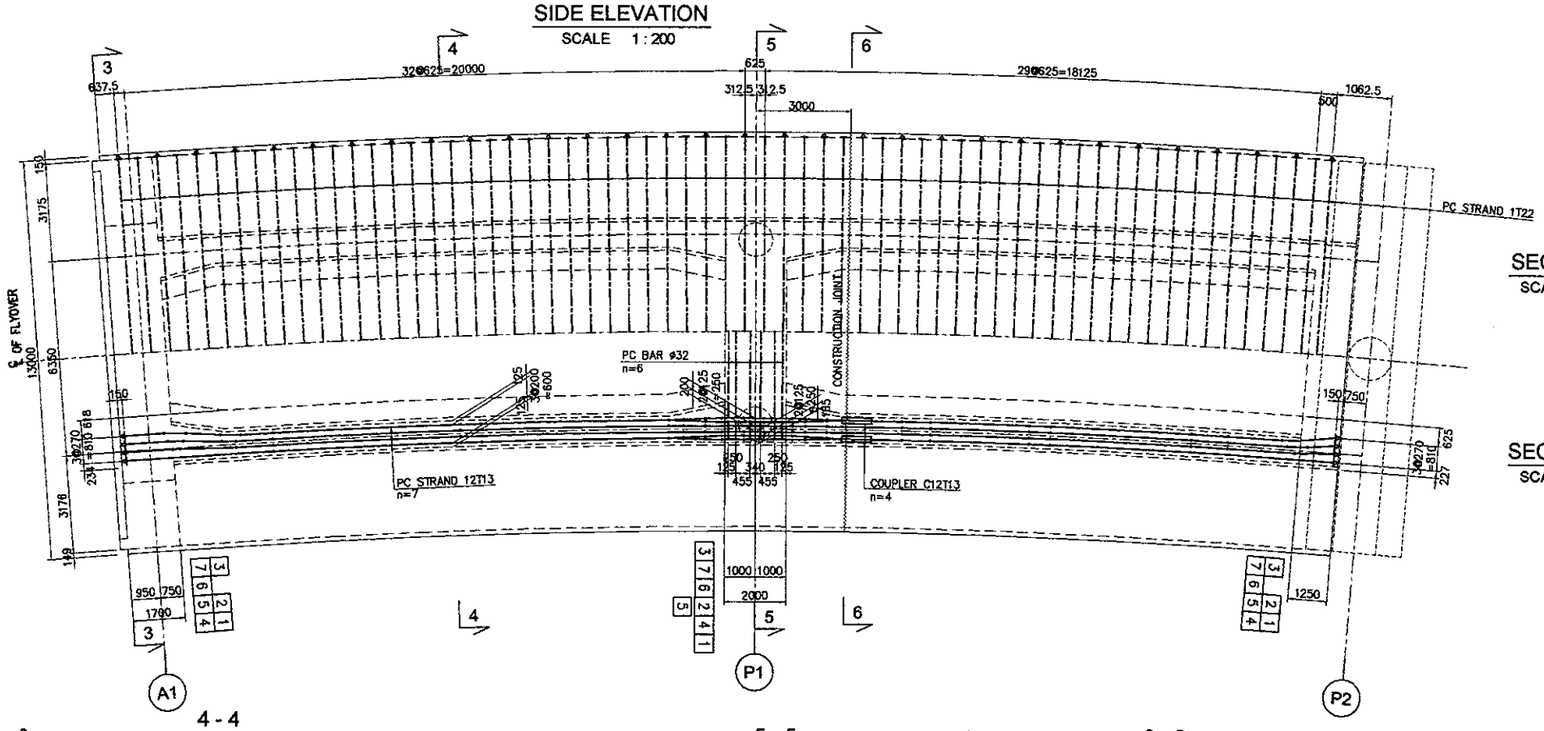

SECTION 1-1
SCALE 1 : 200

SECTION 2-2
SCALE 1 : 200

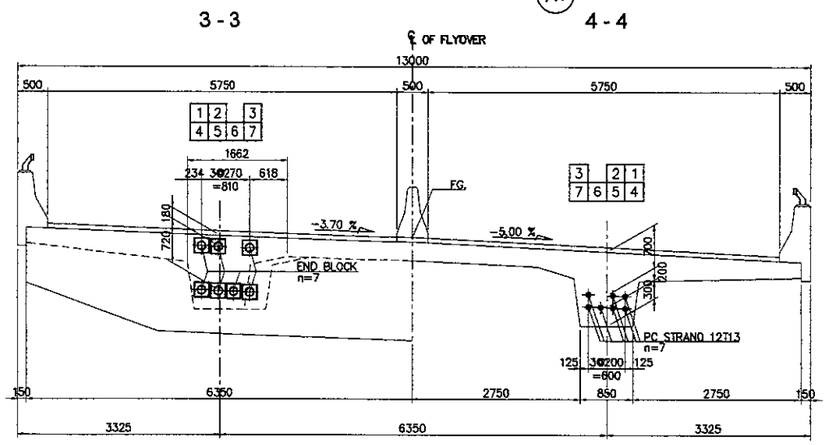

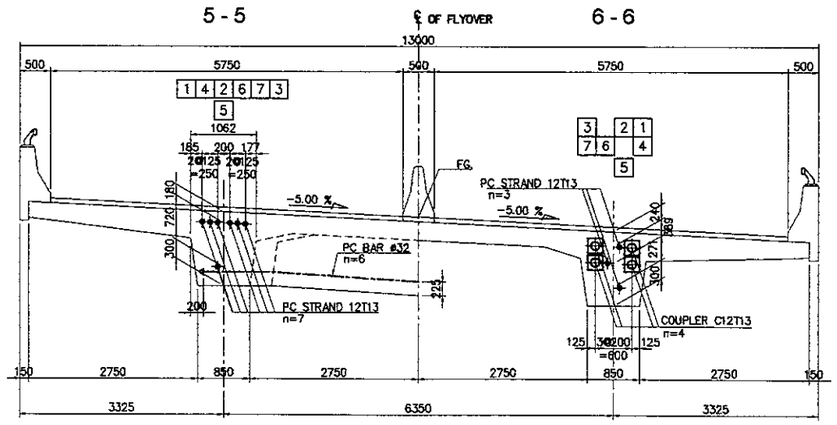

CROSS SECTION
SCALE 1 : 100

NOTES :
1. All dimension are in mm unless noted otherwise.
2. Prestressing Tendon Shall be 12T13 (7 WIRE STRAND). Nominal Diameter 12.7mm.
3. Shows Bending Point Of Prestressing Cable.

Stressing Anchorage
Dead End Anchorage

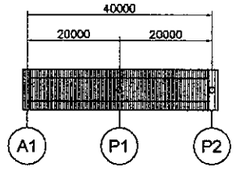

KEY PLAN

JICA JAPAN INTERNATIONAL COOPERATION AGENCY KEI KATAHIRA & ENGINEERS INTERNATIONAL	DESIGNED BY	CHECKED BY	SUBMITTED BY	REPUBLIC OF INDONESIA MINISTRY OF PUBLIC WORKS DIRECTORATE GENERAL OF HIGHWAYS	PROJECT AND LOCATION :	SCALE :	DRAWING TITLE :	DRAWING NO :
	Name: H. HONDA	Name: T. OKUMURA	Name: M. KIUCHI		DETAILED DESIGN STUDY OF NORTH JAVA CORRIDOR FLYOVER PROJECT TANGGULANGIN FLYOVER - CONTRACT PACKAGE 3 (PETERONGAN -TANGGULANGIN) EAST JAVA PROVINCE	1 : 50 1 : 300	ARRANGEMENT OF PC CABLES A1 - P2 (2 OF 2)	TCL-006
	Sign	Sign	Sign					SHEET NO :
	Date	Date	Date	APPROVED BY: Ir. HERRY VAZA M,Eng.Sc NIP. : 110038400 — Sign / Date		FULL SIZE A3		06 / 18

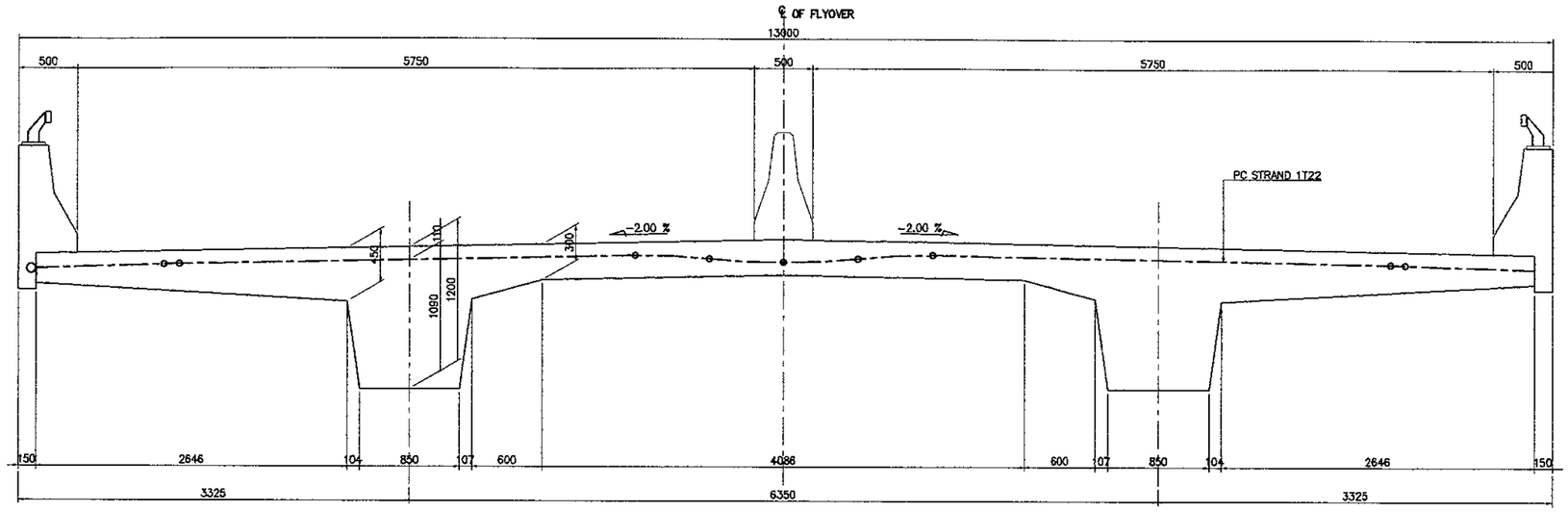

TRANVERSAL PC CABLE

SCALE 1 : 50

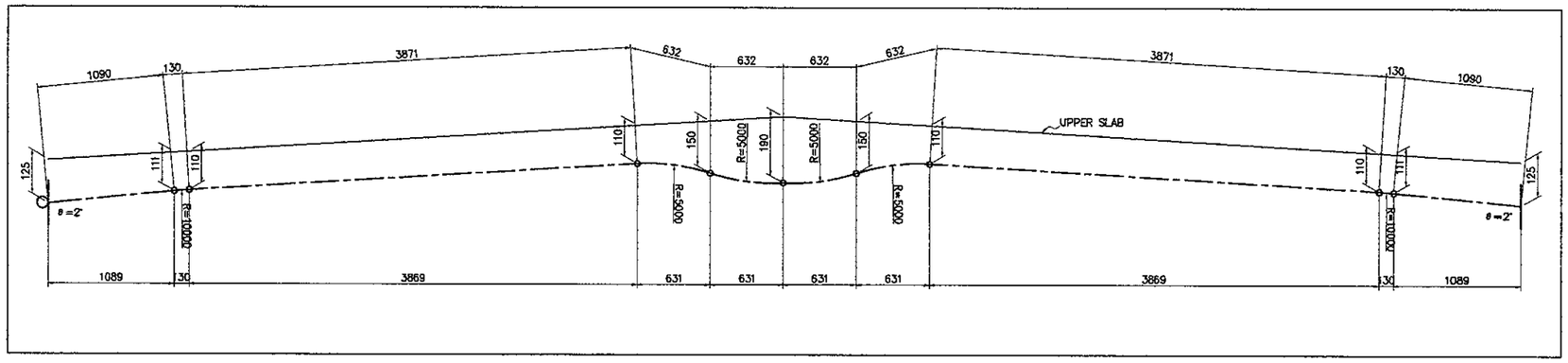

PC CABLE PROFILE

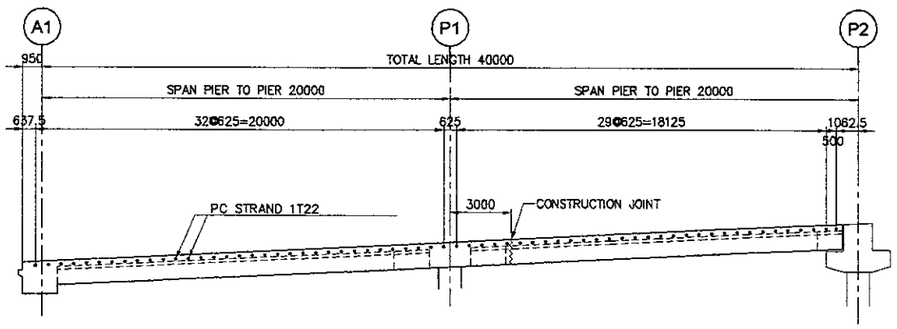

LONGITUDINAL PC CABLE ARRANGEMENT

SCALE 1 : 300

TABEL OF PC CABLES

Length (m)	Nos.	Unit Weight (kg/m)	Weight / 1 nos (kg)	Weight (kg)	Remarks
12.710	64	2.482	31.55	2018.96	Stressing Anchorage One Side Staggered
TOTAL LENGTH (L) = 813.44 m TOTAL WEIGHT (W) = 2018.96 kg					

NOTES :

1. All dimension are in mm unless noted otherwise.
2. Shows Bending Point Of Prestressing Cable.

Stressing Anchorage
Dead End Anchorage

JICA JAPAN INTERNATIONAL COOPERATION AGENCY / KATAHIRA & ENGINEERS INTERNATIONAL	DESIGNED BY	CHECKED BY	SUBMITTED BY	REPUBLIC OF INDONESIA MINISTRY OF PUBLIC WORKS DIRECTORATE GENERAL OF HIGHWAYS	PROJECT AND LOCATION :	SCALE :	DRAWING TITLE :	DRAWING NO :
	Name: H. HONDA	Name: T. OKUMURA	Name: M. KIUCHI		DETAILED DESIGN STUDY OF NORTH JAVA CORRIDOR FLYOVER PROJECT TANGGULANGIN FLYOVER - CONTRACT PACKAGE 3 (PETERONGAN -TANGGULANGIN) EAST JAVA PROVINCE	-	PC CABLES SCHEDULE A1 - P2	TCL-007
	Sign	Sign	Sign	APPROVED BY: Ir. HERRY VAZA M,Eng.Sc NIP. : 110038400		FULL SIZE A3		SHEET NO : 07 / 18
	Date	Date	Date	Sign / Date				

CONSTRUCTION SECTION NO.1 (C1 & C3)

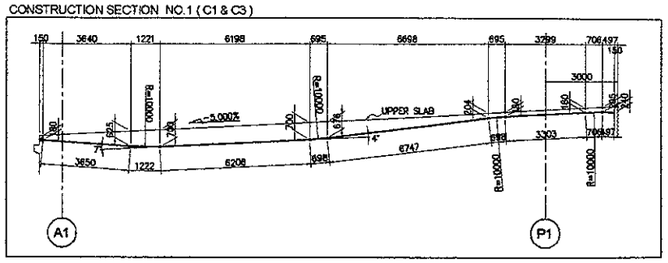

CONSTRUCTION SECTION NO.2 (C1 & C3)

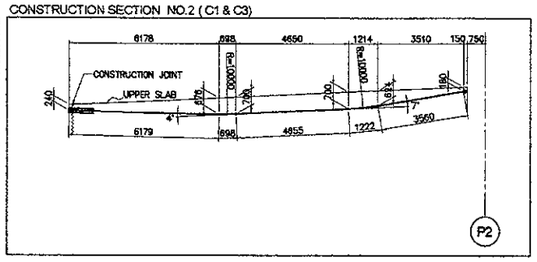

AFTER COMPLETION GIRDER (C2)

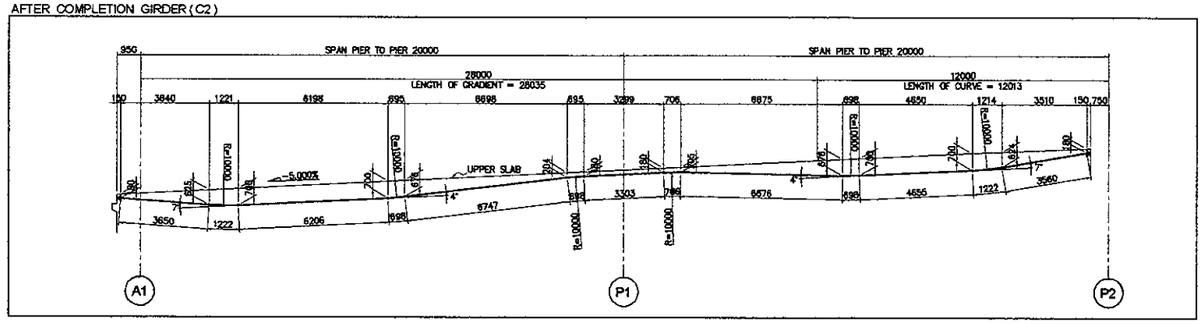

CONSTRUCTION SECTION NO.1 (C4 & C7)

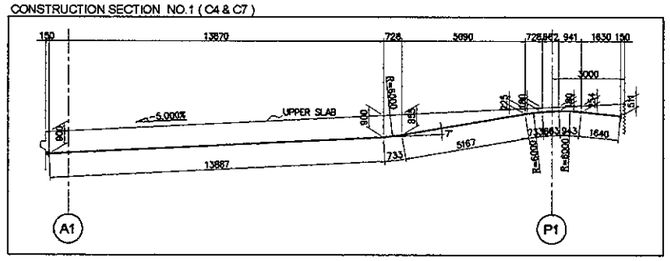

CONSTRUCTION SECTION NO.2 (C7 & C7)

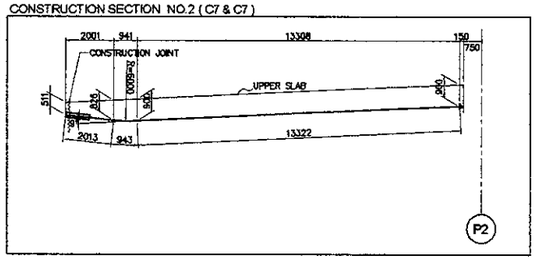

AFTER COMPLETION GIRDER (C6)

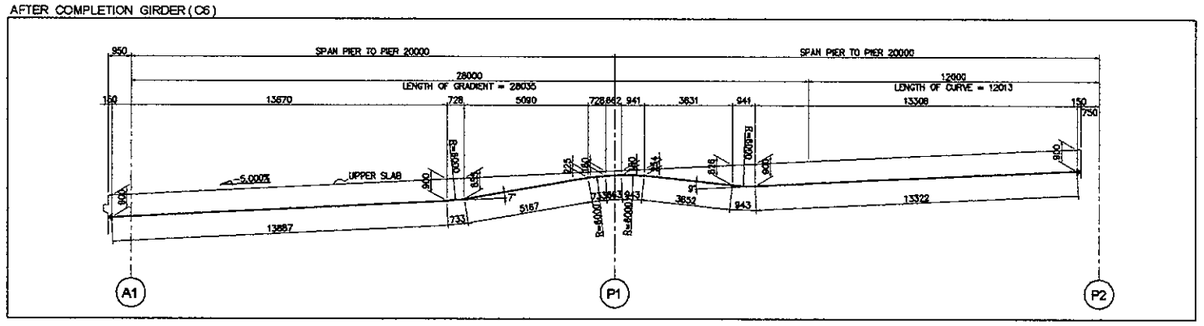

AFTER COMPLETION GIRDER (C5)

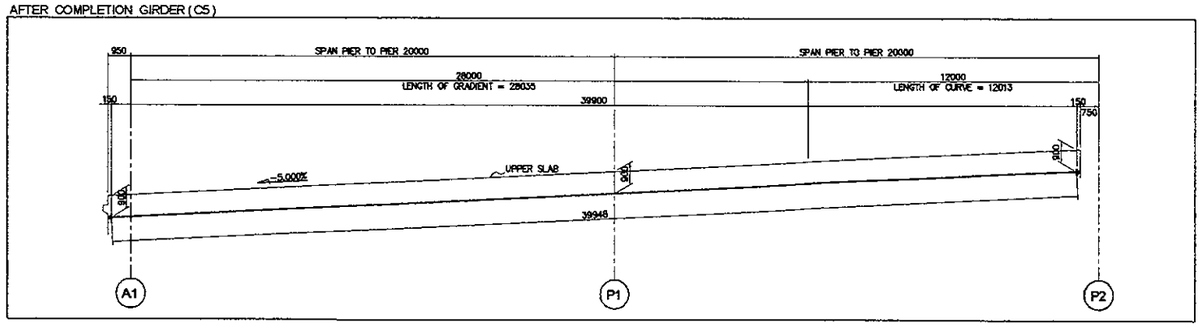

PC CABLES SCHEDULE A1 - P2

SCALE : NON

NOTES :

1. All dimension are in mm unless noted otherwise
2. Prestressing Tendon Shall be 12T13 (7 WIRE STRAND)
   . Nominal Diameter 12.7mm
3. Shows Bending Point Of Prestressing Cable

Stressing Anchorage
Dead End Anchorage

JAPAN INTERNATIONAL COOPERATION AGENCY KATAHIRA & ENGINEERS INTERNATIONAL	DESIGNED BY		CHECKED BY		SUBMITTED BY		REPUBLIC OF INDONESIA MINISTRY OF PUBLIC WORKS DIRECTORATE GENERAL OF HIGHWAYS	PROJECT AND LOCATION :	SCALE :	DRAWING TITLE :	DRAWING NO :
	Name	H.HONDA	Name	T. OKUMURA	Name	M. KIUCHI		DETAILED DESIGN STUDY OF NORTH JAVA CORRIDOR FLYOVER PROJECT TANGGULANGIN FLYOVER - CONTRACT PACKAGE 3 (PETERONGAN -TANGGULANGIN) EAST JAVA PROVINCE	1 : 50	TYPICAL DETAIL OF CROSS SECTION REINFORCEMENT A1 - P2	TCL-008
	Sign		Sign		Sign		APPROVED BY: Ir. HERRY VAZA M,Eng.Sc				SHEET NO :
	Date		Date		Date		NIP. : 110038400 Sign / Date		FULL SIZE A3		08 / 18

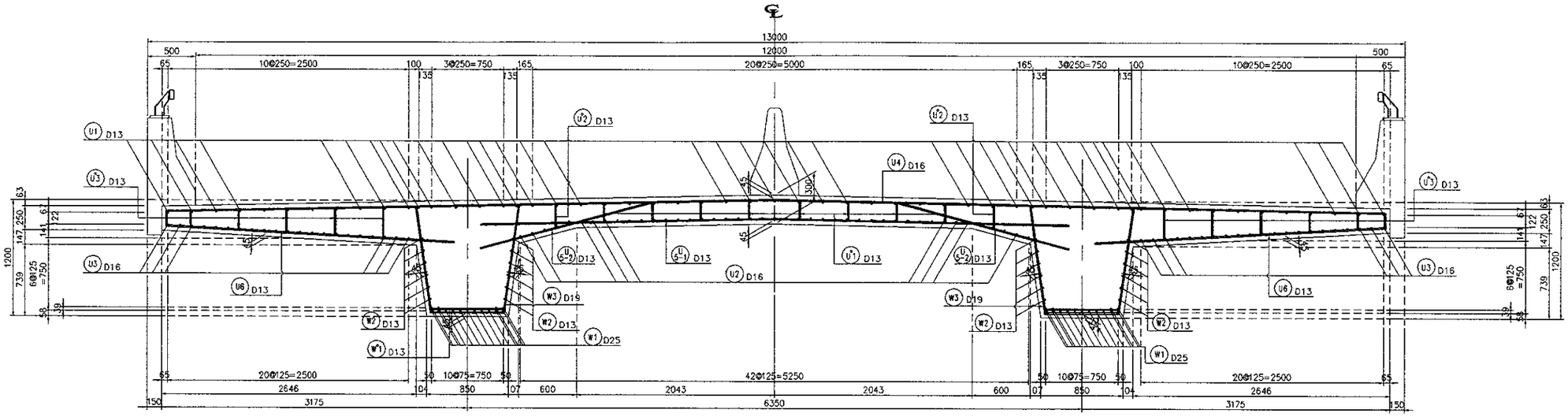

SECTION AT MID SPAN

SCALE 1:50

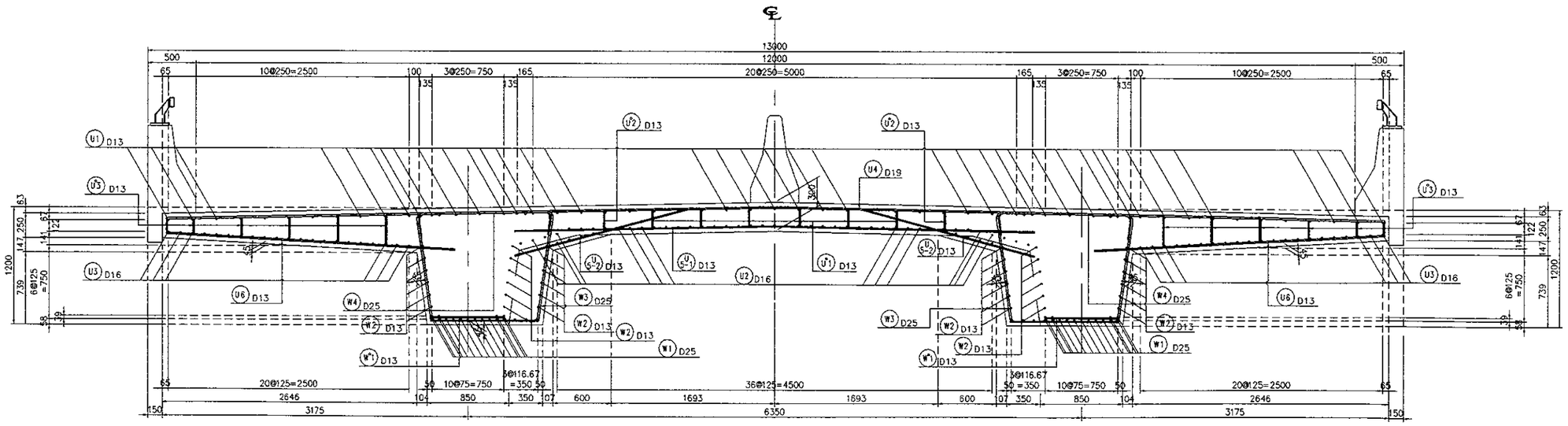

SECTION AT PIER

SCALE 1:50

JAPAN INTERNATIONAL COOPERATION AGENCY KATAHIRA & ENGINEERS INTERNATIONAL	DESIGNED BY	CHECKED BY	SUBMITTED BY	REPUBLIC OF INDONESIA MINISTRY OF PUBLIC WORKS DIRECTORATE GENERAL OF HIGHWAYS	PROJECT AND LOCATION :	SCALE :	DRAWING TITLE :	DRAWING NO :
	Name H.HONDA	Name T. OKUMURA	Name M. KIUCHI		DETAILED DESIGN STUDY OF NORTH JAVA CORRIDOR FLYOVER PROJECT TANGGULANGIN FLYOVER - CONTRACT PACKAGE 3 (PETERONGAN -TANGGULANGIN) EAST JAVA PROVINCE	1 : 200	ARRANGEMENT OF REINFORCEMENT FOR PC GIRDER A1 - P2 (1 OF 3)	TCL-009
	Sign	Sign	Sign	APPROVED BY Ir. HERRY VAZA M,Eng.Sc				SHEET NO :
	Date	Date	Date	NIP. : 110038400 Sign / Date		FULL SIZE A3		09 / 18

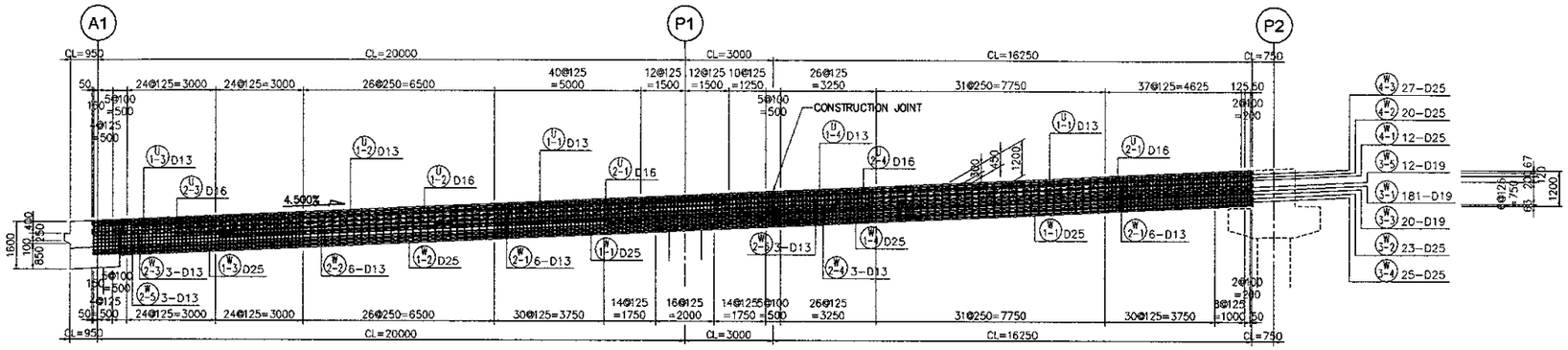

SECTION SPAN A1 - P2

SCALE : 1 : 200

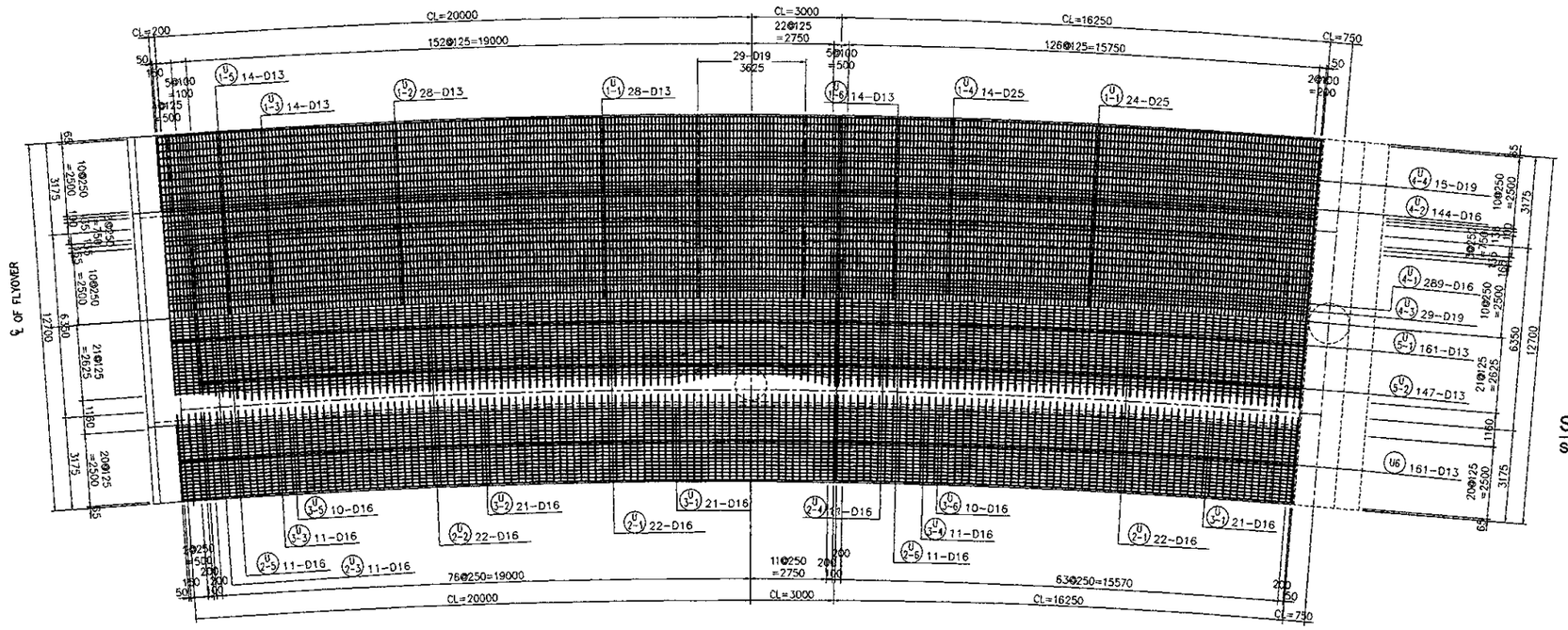

SECTION TOP SLAB

SCALE : 1 : 200

SECTION BOTTOM SLAB

SCALE : 1 : 200

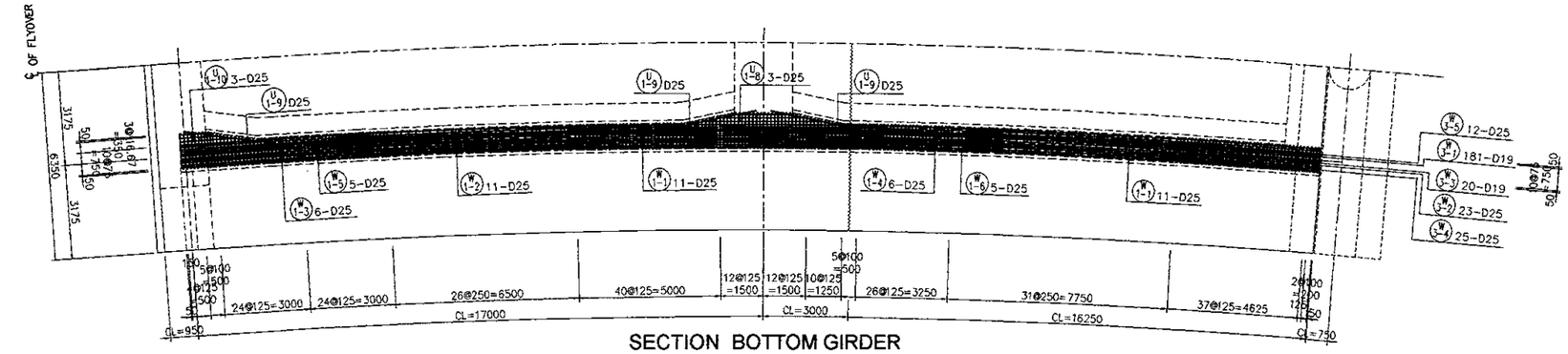

SECTION BOTTOM GIRDER

SCALE : 1 : 200

JAPAN INTERNATIONAL COOPERATION AGENCY KATAHIRA & ENGINEERS INTERNATIONAL	DESIGNED BY		CHECKED BY		SUBMITTED BY		REPUBLIC OF INDONESIA MINISTRY OF PUBLIC WORKS DIRECTORATE GENERAL OF HIGHWAYS			PROJECT AND LOCATION :	SCALE :	DRAWING TITLE :	DRAWING NO :
	Name	H.HONDA	Name	T. OKUMURA	Name	M. KIUCHI				DETAILED DESIGN STUDY OF NORTH JAVA CORRIDOR FLYOVER PROJECT TANGGULANGIN FLYOVER - CONTRACT PACKAGE 3 (PETERONGAN -TANGGULANGIN) EAST JAVA PROVINCE	1 : 100	ARRANGEMENT OF REINFORCEMENT FOR PC GIRDER A1-P2 (2 OF 3)	TCL-010
	Sign		Sign		Sign		APPROVED BY	Ir. HERRY VAZA M,Eng.Sc	Sign				SHEET NO :
	Date		Date		Date			NIP. : 110038400	Date		FULL SIZE A3		10 / 18

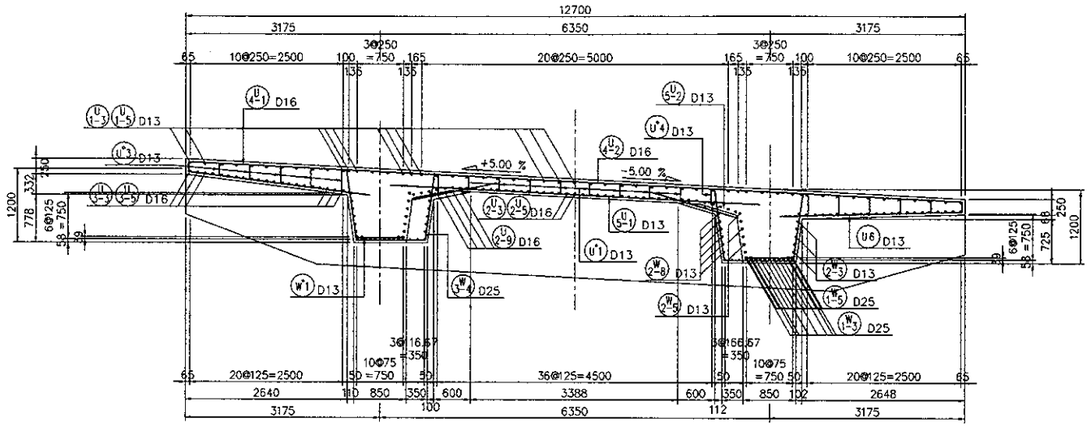

SECTION AT A1

SCALE : 1 : 100

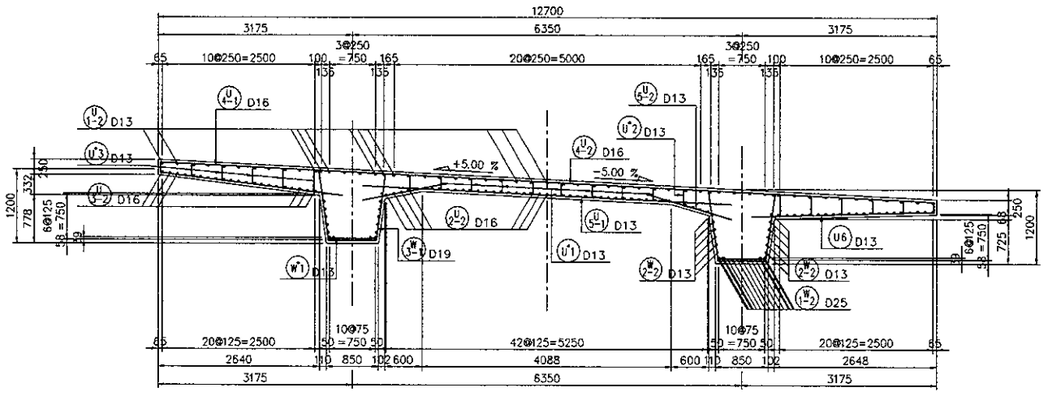

SECTION MID SPAN A1~P1

SCALE : 1 : 100