JICA JAPAN INTERNATIONAL COOPERATION AGENCY / KEI KATAHIRA & ENGINEERS INTERNATIONAL	DESIGNED BY: Name R. UENO, Sign, Date	CHECKED BY: Name T. OKUMURA, Sign, Date	SUBMITTED BY: Name M. KIUCHI, Sign, Date	REPUBLIC OF INDONESIA MINISTRY OF PUBLIC WORKS DIRECTORATE GENERAL OF HIGHWAYS	APPROVED BY: Ir. HERRY VAZA M,Eng.Sc, NIP. : 110038400, Sign, Date	PROJECT AND LOCATION : DETAILED DESIGN STUDY OF NORTH JAVA CORRIDOR FLYOVER PROJECT TANGGULANGIN FLYOVER - CONTRACT PACKAGE 3 (PETERONGAN -TANGGULANGIN) EAST JAVA PROVINCE	SCALE : 1 : 50, FULL SIZE A3	DRAWING TITLE : DRAINAGE DETAILS OF MANHOLE TYPE - VIII	DRAWING NO : TDV-021, SHEET NO : 21 / 31

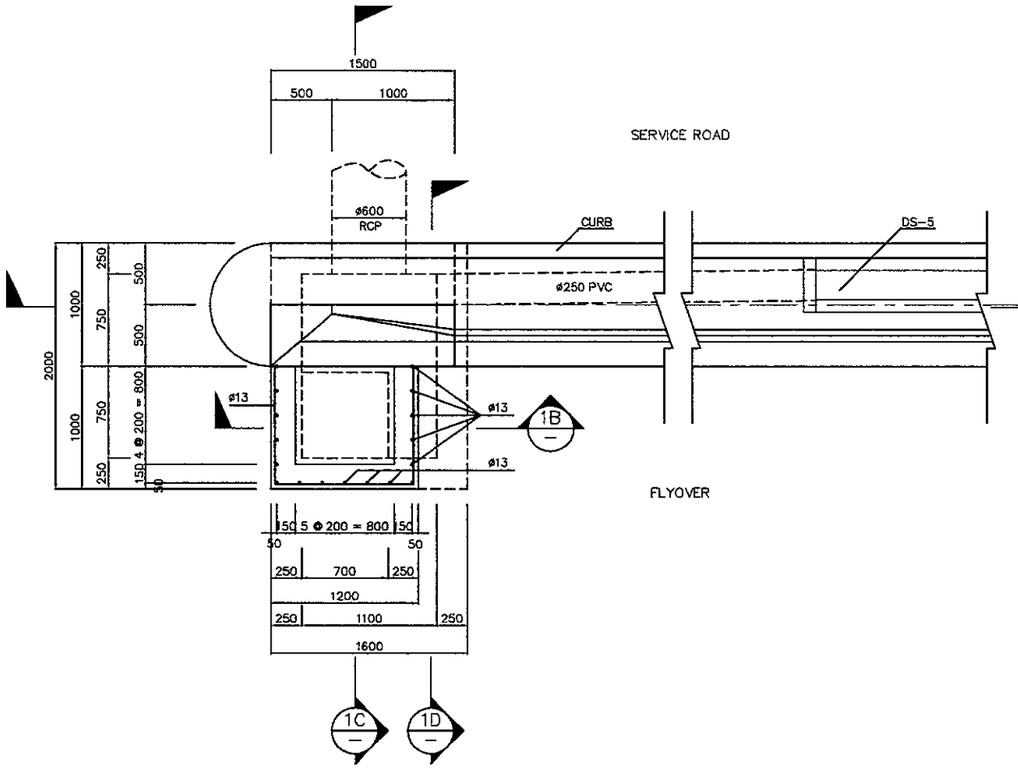

1 PLAN
SCALE 1:50

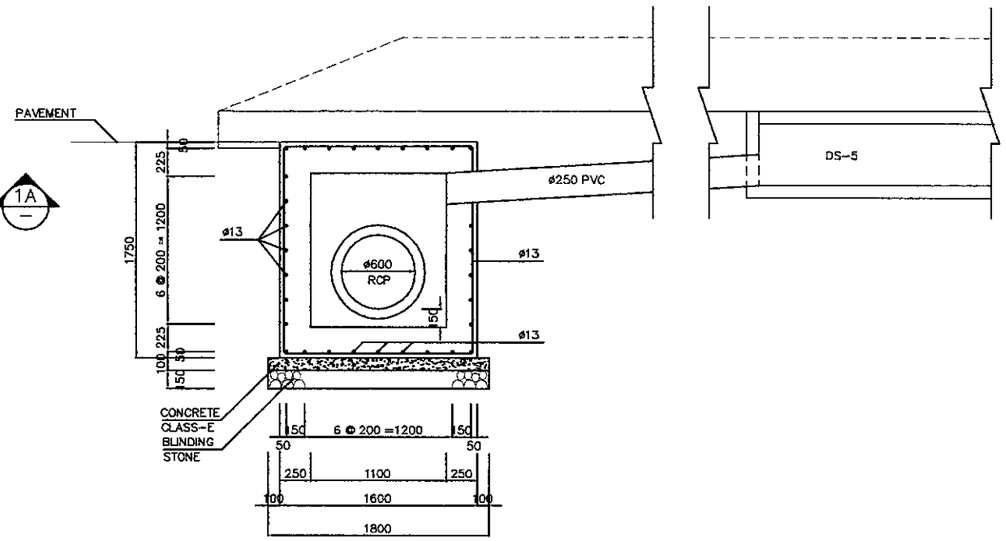

1A SECTION
SCALE 1:50

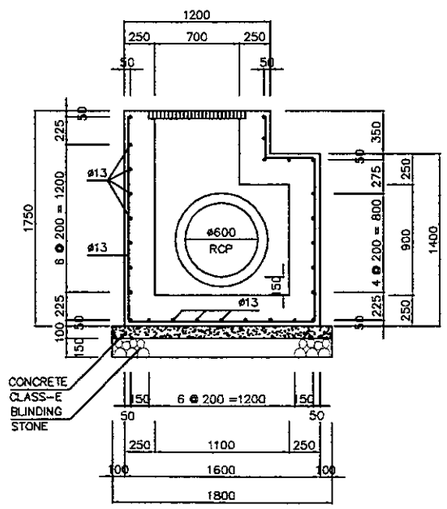

1B SECTION
SCALE 1:50

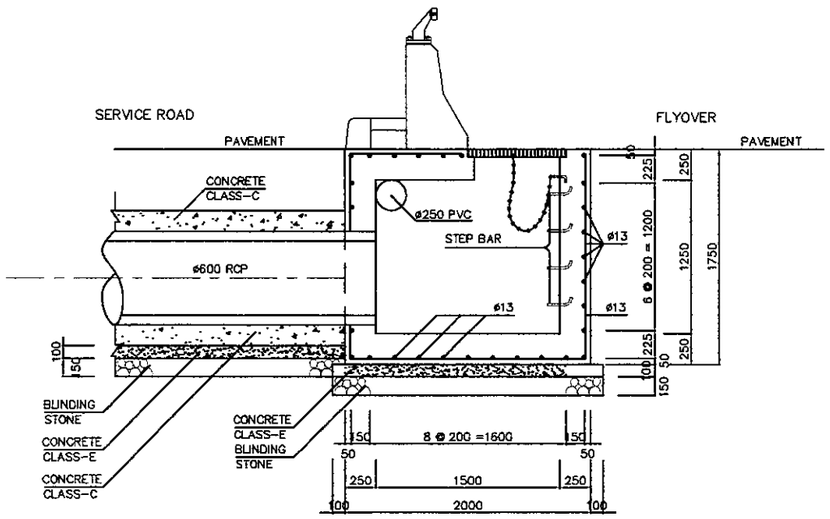

1C SECTION
SCALE 1:50

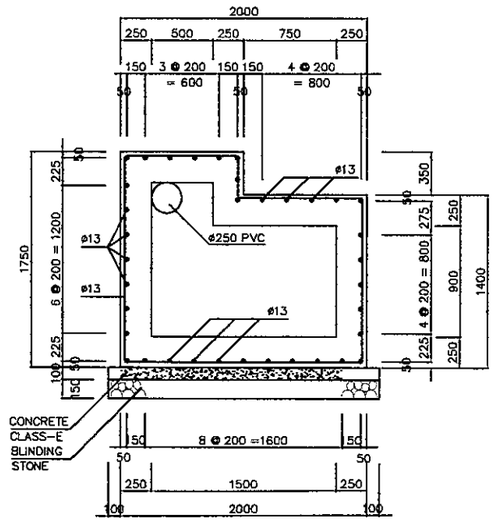

1D SECTION
SCALE 1:50

JICA JAPAN INTERNATIONAL COOPERATION AGENCY / KEI KATAHIRA & ENGINEERS INTERNATIONAL	DESIGNED BY	CHECKED BY	SUBMITTED BY	REPUBLIC OF INDONESIA MINISTRY OF PUBLIC WORKS DIRECTORATE GENERAL OF HIGHWAYS	PROJECT AND LOCATION :	SCALE :	DRAWING TITLE :	DRAWING NO :
	Name: R. UENO	Name: T. OKUMURA	Name: M. KIUCHI		DETAILED DESIGN STUDY OF NORTH JAVA CORRIDOR FLYOVER PROJECT TANGGULANGIN FLYOVER - CONTRACT PACKAGE 3 (PETERONGAN -TANGGULANGIN) EAST JAVA PROVINCE	1 : 5 1 : 15 1 : 20 1 : 50	STEEL GRATING DETAILS OF MANHOLE TYPE - VIII	TDV-022
	Sign	Sign	Sign	APPROVED BY: ir. HERRY VAZA M,Eng.Sc NIP. : 110038400				SHEET NO :
	Date	Date	Date	Sign / Date		FULL SIZE A3		22 / 31

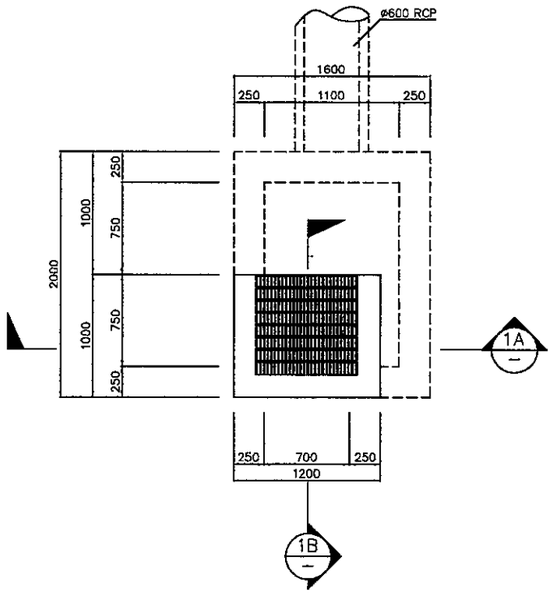

1 PLAN
SCALE 1:50

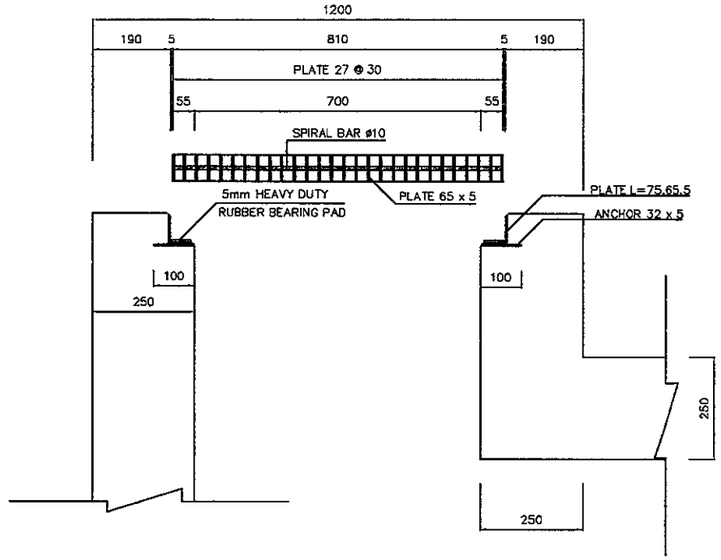

1A SECTION
SCALE 1:15

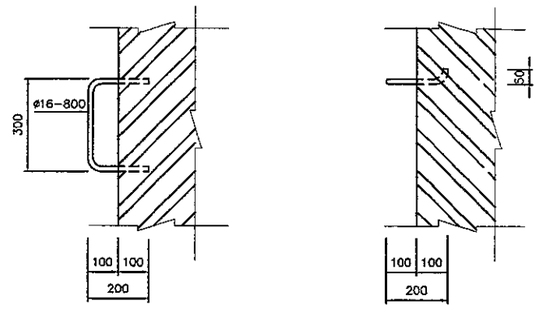

3 STEP DETAIL
SCALE 1:20

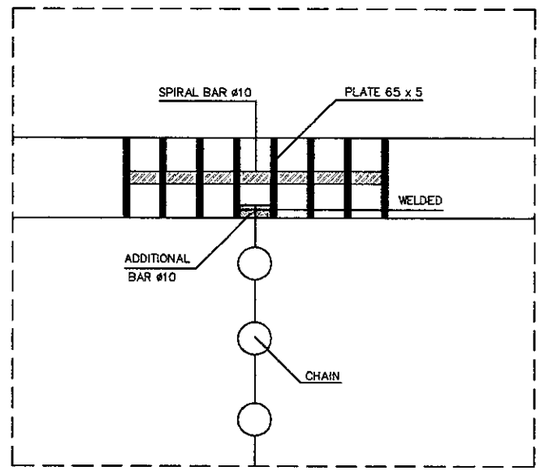

4 DETAIL "A"
SCALE 1:5

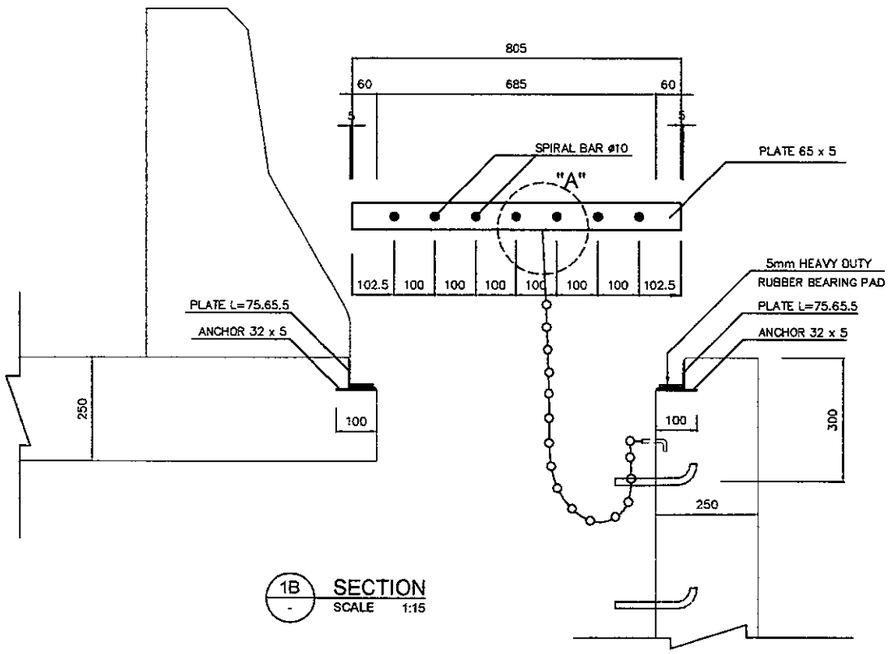

1B SECTION
SCALE 1:15

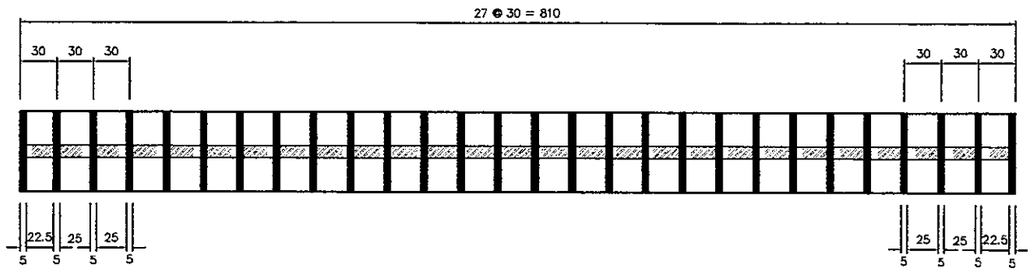

5 DETAILS STEEL GRATING
SCALE 1:5

JICA JAPAN INTERNATIONAL COOPERATION AGENCY / KATAHIRA & ENGINEERS INTERNATIONAL	DESIGNED BY	CHECKED BY	SUBMITTED BY	REPUBLIC OF INDONESIA MINISTRY OF PUBLIC WORKS DIRECTORATE GENERAL OF HIGHWAYS	PROJECT AND LOCATION :	SCALE :	DRAWING TITLE :	DRAWING NO :
	Name: R. UENO	Name: T. OKUMURA	Name: M. KIUCHI		DETAILED DESIGN STUDY OF NORTH JAVA CORRIDOR FLYOVER PROJECT TANGGULANGIN FLYOVER - CONTRACT PACKAGE 3 (PETERONGAN -TANGGULANGIN) EAST JAVA PROVINCE	VARIES	DRAINAGE MISCELLANEOUS VIADUCT DETAILS	TDV-023
	Sign	Sign	Sign	APPROVED BY: Ir. HERRY VAZA M,Eng.Sc				SHEET NO :
	Date	Date	Date	NIP. : 110038400 / Sign / Date		FULL SIZE A3		23 / 31

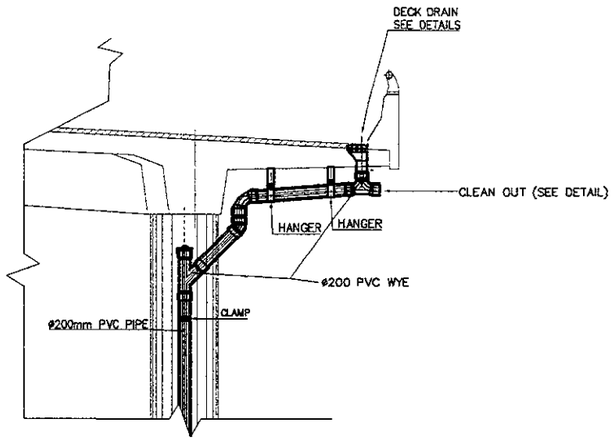

1 DECK DRAIN / DOWNSPOUT DETAIL
SCALE 1:50

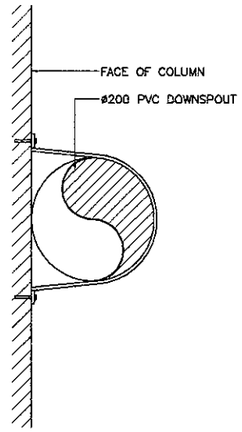

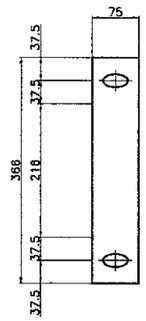

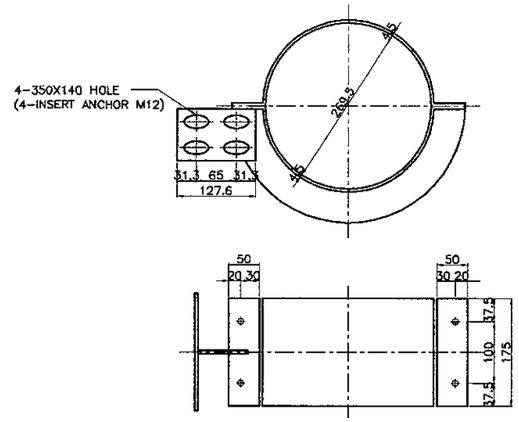

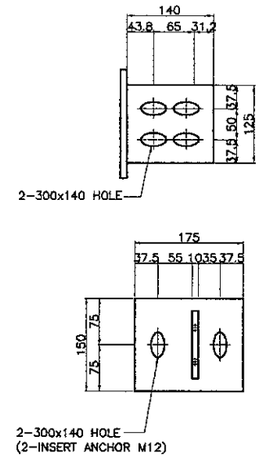

2 CLAMP
SCALE 1:5

3 BRACKET
SCALE 1:5

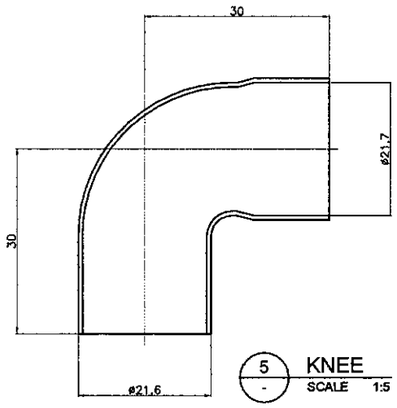

5 KNEE
SCALE 1:5

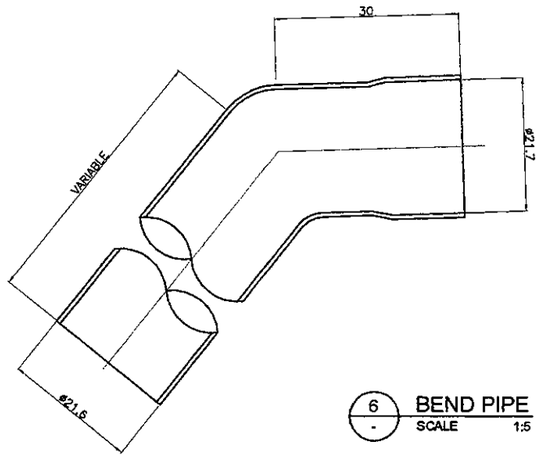

6 BEND PIPE
SCALE 1:5

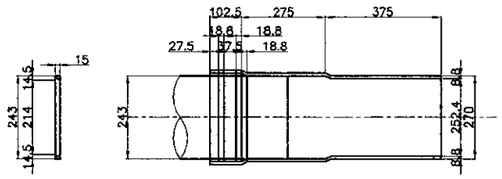

4 HORIZONTAL JOINTING
SCALE 1:10

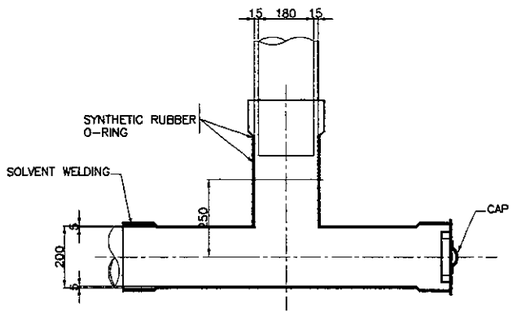

7 VERTICAL JOINTING
SCALE 1:10

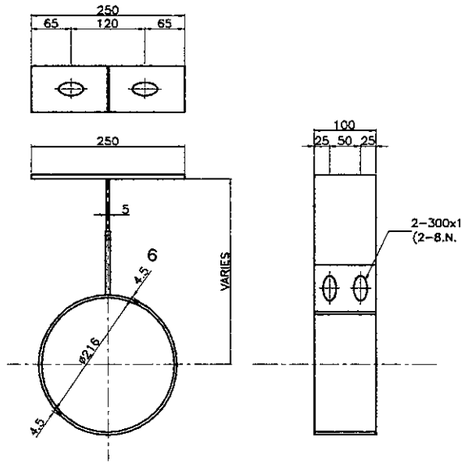

8 HANGER
SCALE 1:5

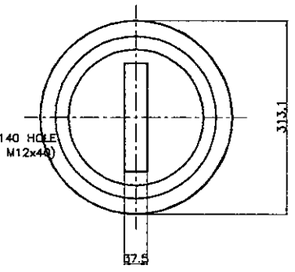

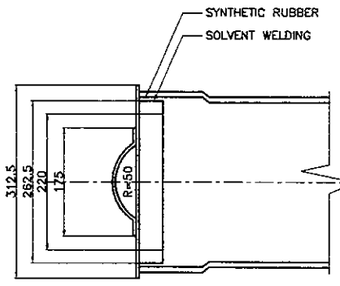

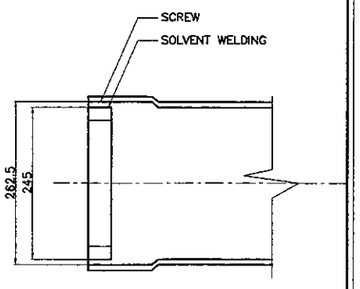

9 CLEAN OUT
SCALE 1:5

JAPAN INTERNATIONAL COOPERATION AGENCY KATAHIRA & ENGINEERS INTERNATIONAL	DESIGNED BY	CHECKED BY	SUBMITTED BY	REPUBLIC OF INDONESIA MINISTRY OF PUBLIC WORKS DIRECTORATE GENERAL OF HIGHWAYS	PROJECT AND LOCATION :	SCALE :	DRAWING TITLE :	DRAWING NO :
	Name: R. UENO	Name: T. OKUMURA	Name: M. KIUCHI		DETAILED DESIGN STUDY OF NORTH JAVA CORRIDOR FLYOVER PROJECT TANGGULANGIN FLYOVER - CONTRACT PACKAGE 3 (PETERONGAN -TANGGULANGIN) EAST JAVA PROVINCE	1 : 200	PLAN AND ELEVATION OF VIADUCT ALONG APPROACH 1 OF 6	TDV-024
	Sign:	Sign:	Sign:	APPROVED BY: Ir. HERRY VAZA M,Eng.Sc NIP. : 110038400				SHEET NO : 24 / 31
	Date:	Date:	Date:	Sign: Date:		FULL SIZE A3		

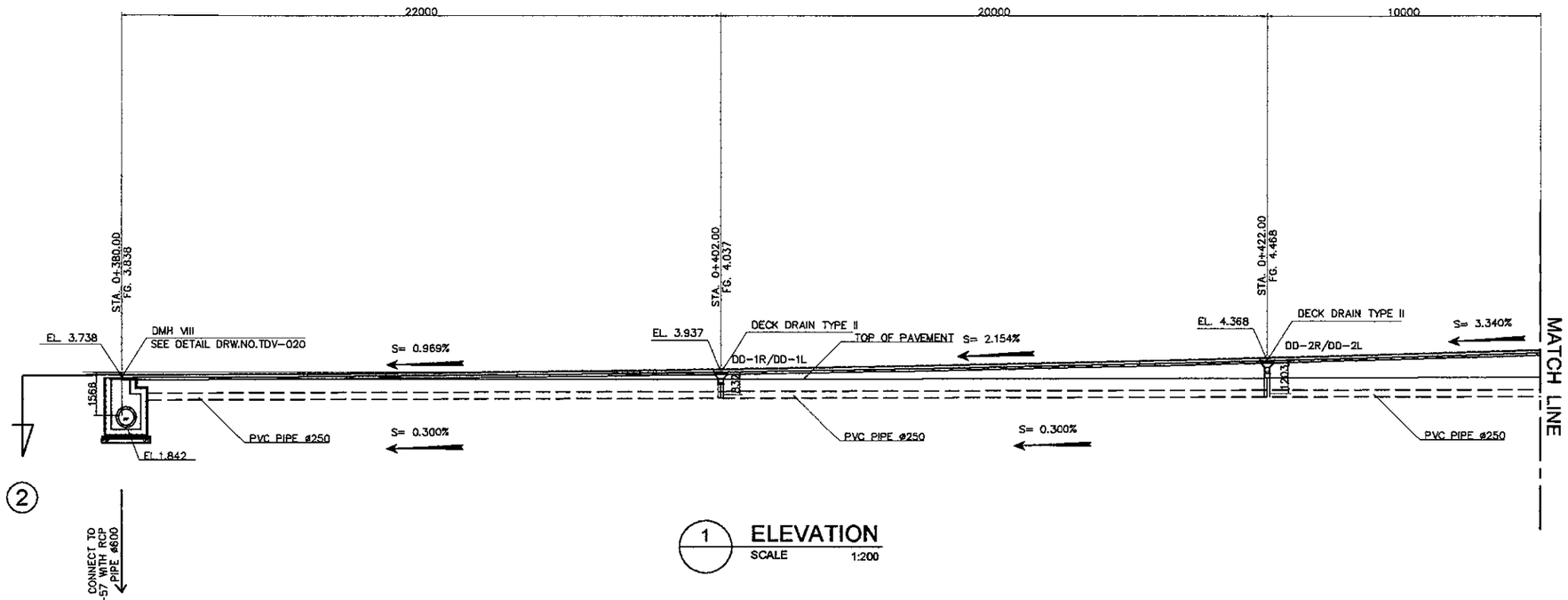

1 ELEVATION
SCALE 1:200

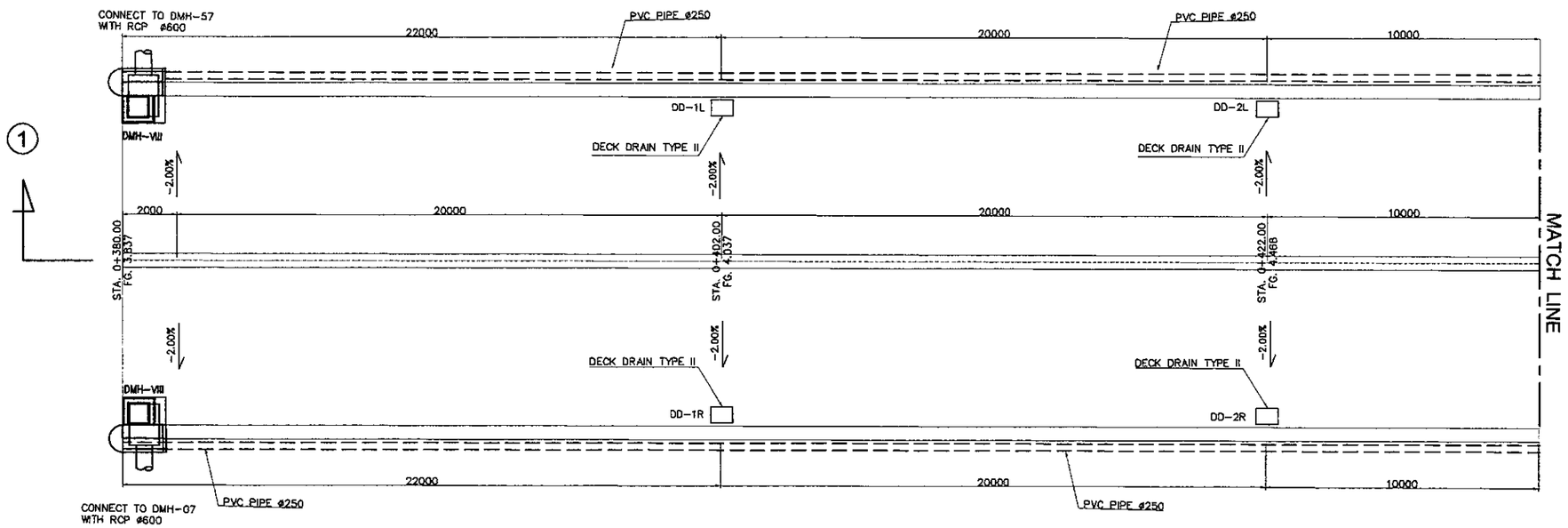

2 PLAN
SCALE 1:200

JAPAN INTERNATIONAL COOPERATION AGENCY / KATAHIRA & ENGINEERS INTERNATIONAL	DESIGNED BY	CHECKED BY	SUBMITTED BY	REPUBLIC OF INDONESIA MINISTRY OF PUBLIC WORKS DIRECTORATE GENERAL OF HIGHWAYS	PROJECT AND LOCATION :	SCALE :	DRAWING TITLE :	DRAWING NO :
	Name: R. UENO	Name: T. OKUMURA	Name: M. KIUCHI		DETAILED DESIGN STUDY OF NORTH JAVA CORRIDOR FLYOVER PROJECT TANGGULANGIN FLYOVER - CONTRACT PACKAGE 3 (PETERONGAN -TANGGULANGIN) EAST JAVA PROVINCE	1 : 200	PLAN AND ELEVATION OF VIADUCT ALONG APPROACH 2 OF 6	TDV-025
	Sign	Sign	Sign	APPROVED BY: Ir. HERRY VAZA M,Eng.Sc NIP. : 110038400				SHEET NO : 25 / 31
	Date	Date	Date	Sign / Date		FULL SIZE A3		

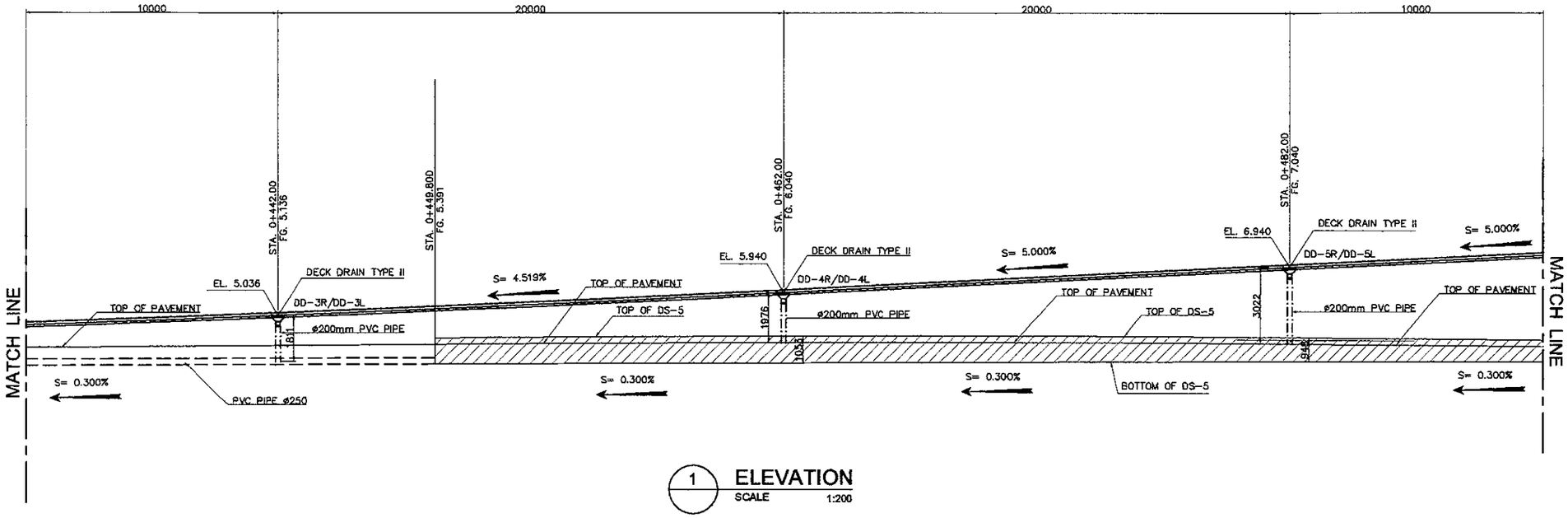

1 ELEVATION
SCALE 1:200

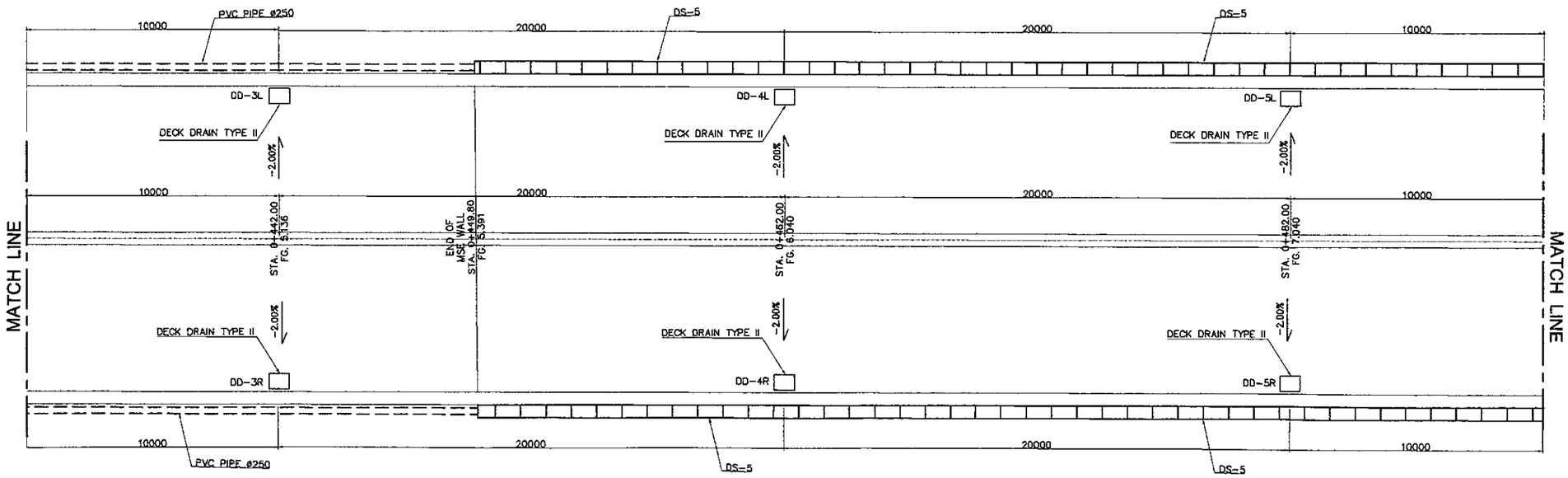

2 PLAN
SCALE 1:200

JAPAN INTERNATIONAL COOPERATION AGENCY KATAHIRA & ENGINEERS INTERNATIONAL	DESIGNED BY	CHECKED BY	SUBMITTED BY	REPUBLIC OF INDONESIA MINISTRY OF PUBLIC WORKS DIRECTORATE GENERAL OF HIGHWAYS	PROJECT AND LOCATION :	SCALE :	DRAWING TITLE :	DRAWING NO :
	Name: R. UENO	Name: T. OKUMURA	Name: M. KIUCHI		DETAILED DESIGN STUDY OF NORTH JAVA CORRIDOR FLYOVER PROJECT TANGGULANGIN FLYOVER - CONTRACT PACKAGE 3 (PETERONGAN -TANGGULANGIN) EAST JAVA PROVINCE	1 : 200 FULL SIZE A3	PLAN AND ELEVATION OF VIADUCT ALONG APPROACH 3 OF 6	TDV-026
	Sign	Sign	Sign	APPROVED BY: Ir. HERRY VAZA M,Eng.Sc NIP. : 110038400				SHEET NO : 26 / 31
	Date	Date	Date	Sign / Date				

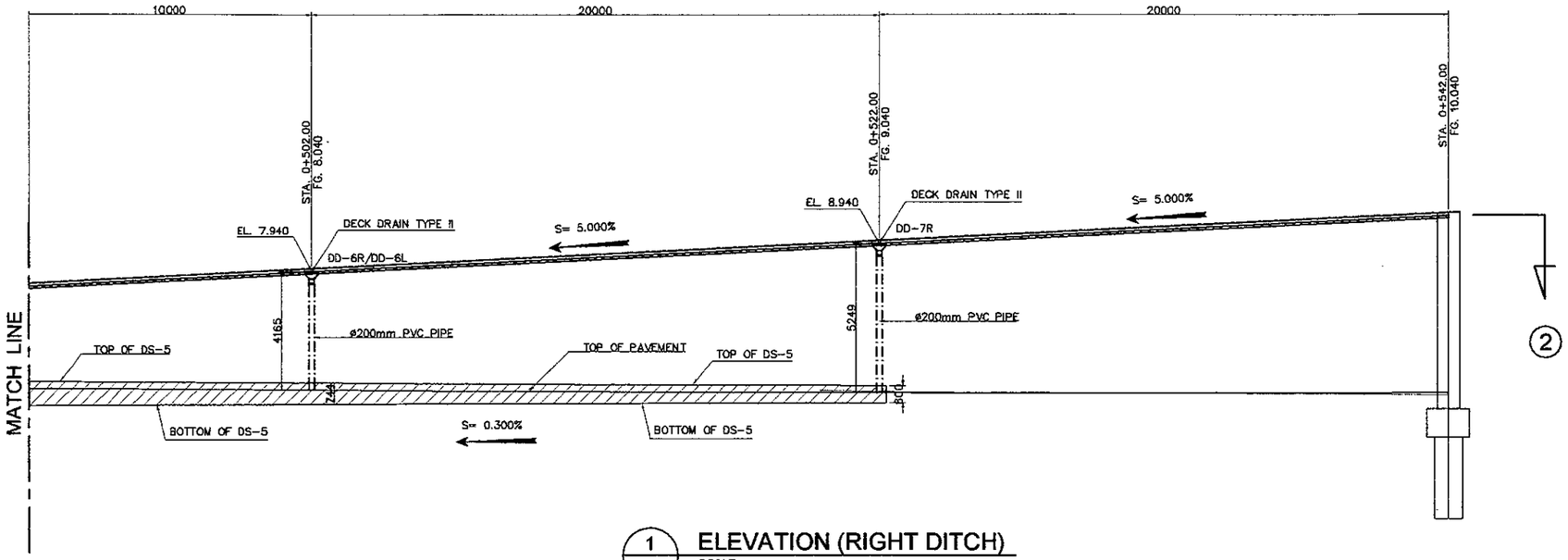

1 ELEVATION (RIGHT DITCH)
SCALE 1:200

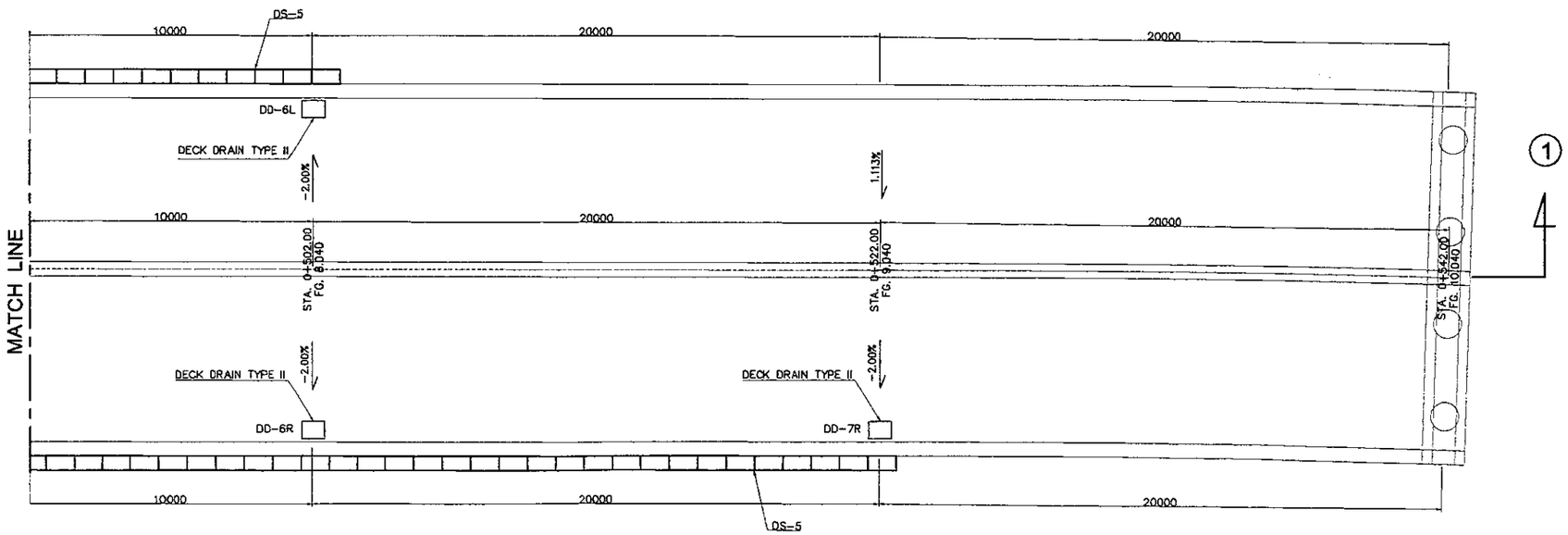

2 PLAN
SCALE 1:200

JAPAN INTERNATIONAL COOPERATION AGENCY KATAHIRA & ENGINEERS INTERNATIONAL	DESIGNED BY	CHECKED BY	SUBMITTED BY	REPUBLIC OF INDONESIA MINISTRY OF PUBLIC WORKS DIRECTORATE GENERAL OF HIGHWAYS	PROJECT AND LOCATION :	SCALE :	DRAWING TITLE :	DRAWING NO :
	Name: R. UENO	Name: T. OKUMURA	Name: M. KIUCHI		DETAILED DESIGN STUDY OF NORTH JAVA CORRIDOR FLYOVER PROJECT TANGGULANGIN FLYOVER - CONTRACT PACKAGE 3 (PETERONGAN -TANGGULANGIN) EAST JAVA PROVINCE	1 : 200	PLAN AND ELEVATION OF VIADUCT ALONG APPROACH 4 OF 6	TDV-027
	Sign	Sign	Sign	APPROVED BY: Ir. HERRY VAZA M,Eng.Sc NIP. : 110038400				SHEET NO :
	Date	Date	Date	Sign / Date		FULL SIZE A3		27 / 31

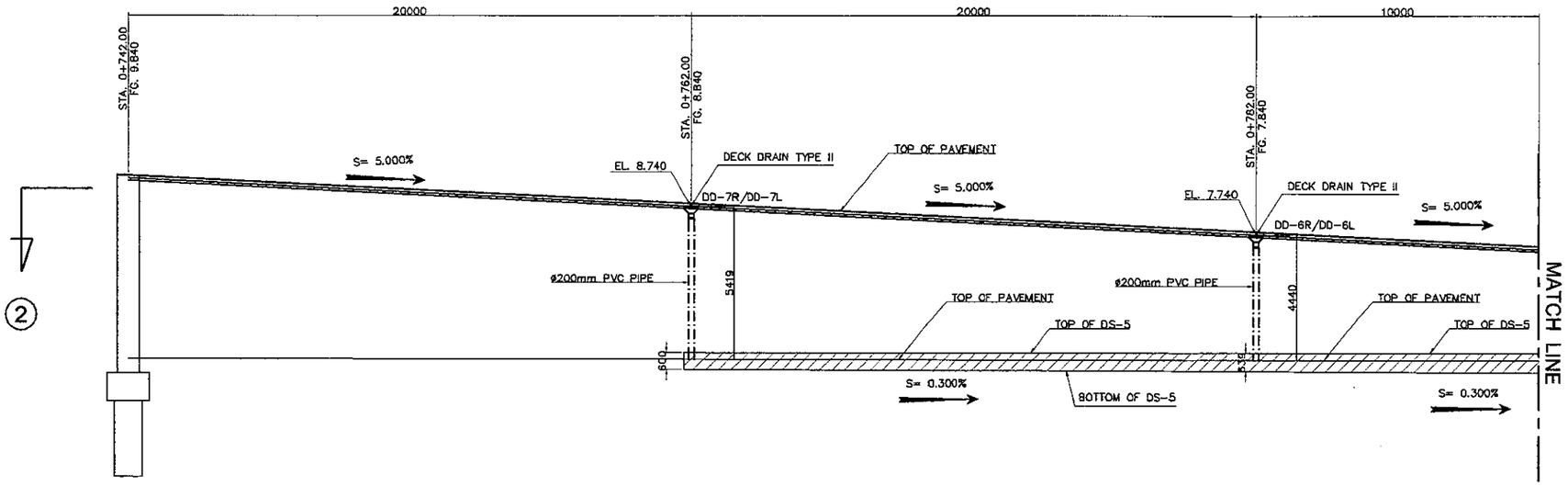

1 ELEVATION
SCALE 1:200

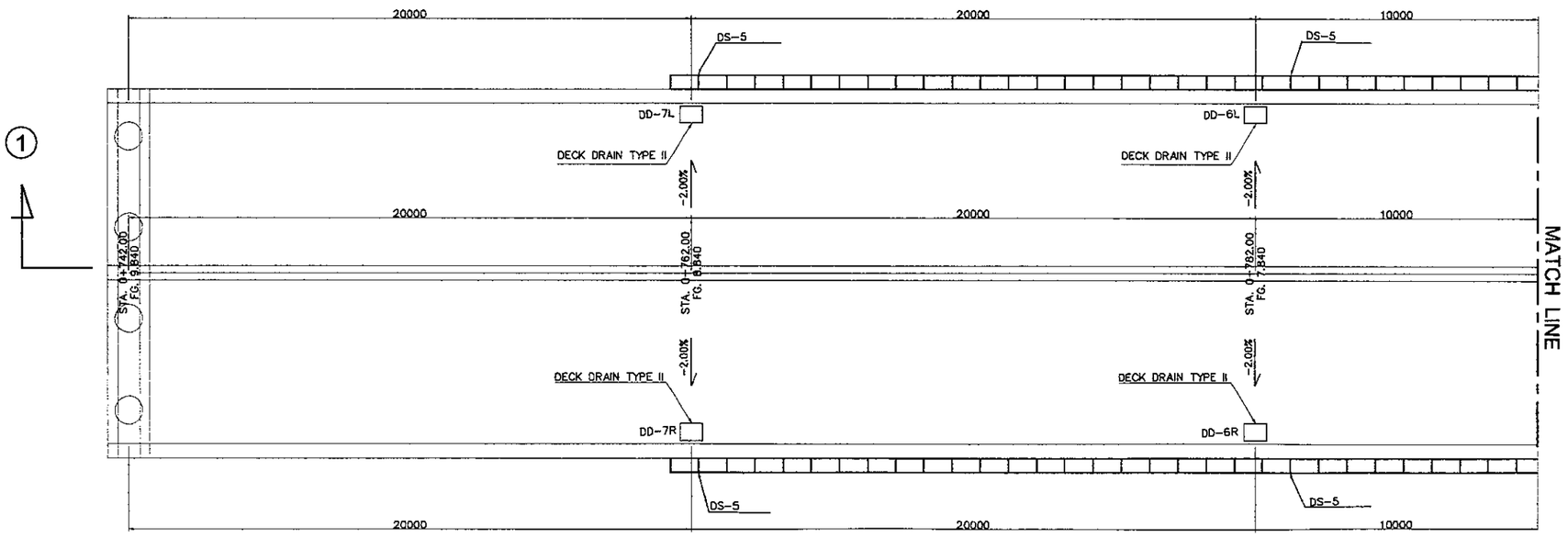

2 PLAN
SCALE 1:200

JAPAN INTERNATIONAL COOPERATION AGENCY KATAHIRA & ENGINEERS INTERNATIONAL	DESIGNED BY	CHECKED BY	SUBMITTED BY	REPUBLIC OF INDONESIA MINISTRY OF PUBLIC WORKS DIRECTORATE GENERAL OF HIGHWAYS	PROJECT AND LOCATION :	SCALE :	DRAWING TITLE :	DRAWING NO :
	Name: R. UENO	Name: T. OKUMURA	Name: M. KIUCHI		DETAILED DESIGN STUDY OF NORTH JAVA CORRIDOR FLYOVER PROJECT TANGGULANGIN FLYOVER - CONTRACT PACKAGE 3 (PETERONGAN -TANGGULANGIN) EAST JAVA PROVINCE	1 : 200	PLAN AND ELEVATION OF VIADUCT ALONG APPROACH 5 OF 6	TDV-028
	Sign	Sign	Sign	APPROVED BY: Ir. HERRY VAZA M,Eng.Sc				SHEET NO :
	Date	Date	Date	NIP. : 11003840 0 — Sign / Date		FULL SIZE A3		28 / 31

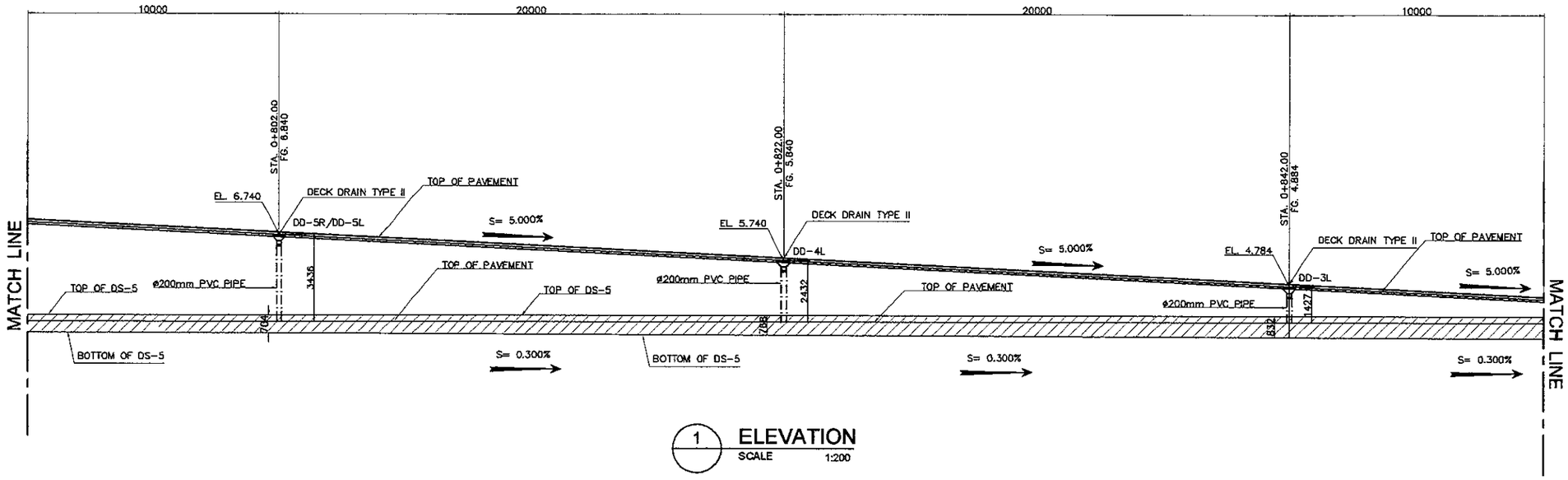

1 ELEVATION
SCALE 1:200

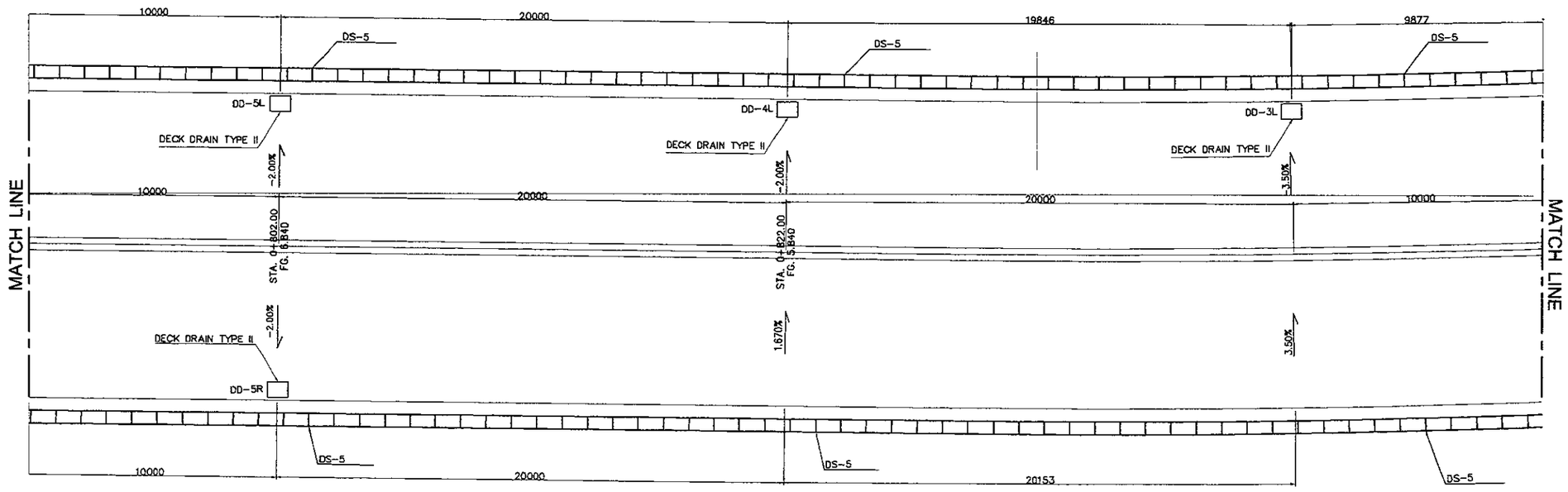

2 PLAN
SCALE 1:200

JICA JAPAN INTERNATIONAL COOPERATION AGENCY / KEI KATAHIRA & ENGINEERS INTERNATIONAL	DESIGNED BY	CHECKED BY	SUBMITTED BY	REPUBLIC OF INDONESIA MINISTRY OF PUBLIC WORKS DIRECTORATE GENERAL OF HIGHWAYS	PROJECT AND LOCATION :	SCALE :	DRAWING TITLE :	DRAWING NO :
	Name: R. UENO	Name: T. OKUMURA	Name: M. KIUCHI		DETAILED DESIGN STUDY OF NORTH JAVA CORRIDOR FLYOVER PROJECT TANGGULANGIN FLYOVER - CONTRACT PACKAGE 3 (PETERONGAN -TANGGULANGIN) EAST JAVA PROVINCE	1 : 200	PLAN AND ELEVATION OF VIADUCT ALONG APPROACH 6 OF 6	TDV-029
	Sign	Sign	Sign	APPROVED BY: Ir. HERRY VAZA M.Eng.Sc NIP. : 110038400		FULL SIZE A3		SHEET NO : 29 / 31
	Date	Date	Date	Sign / Date				

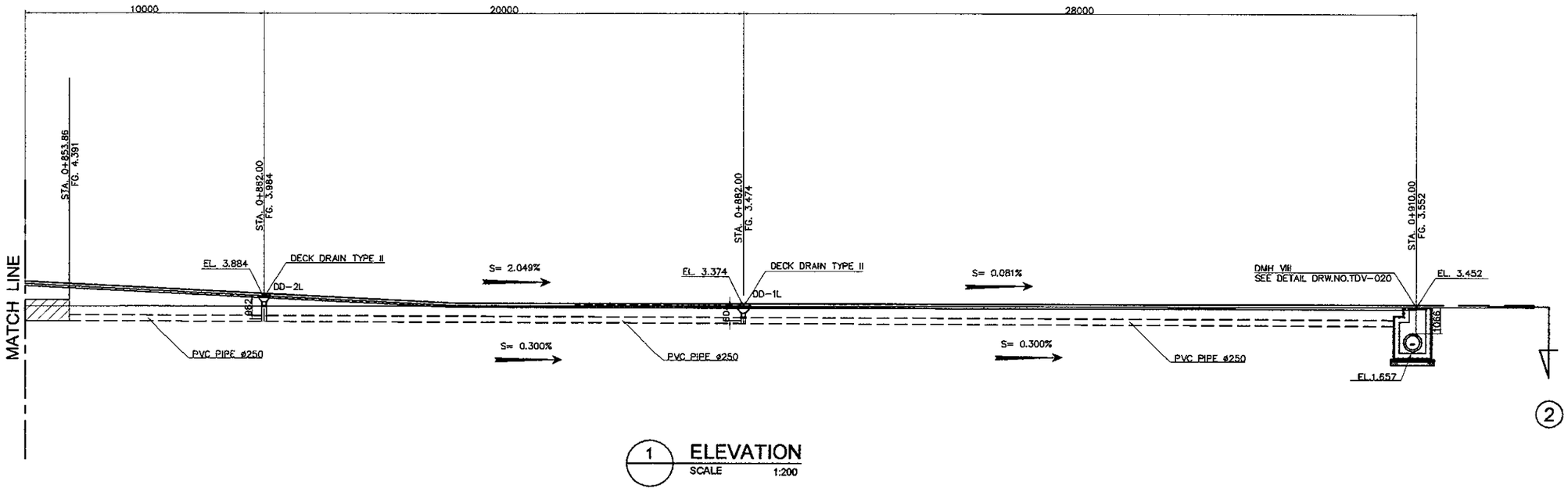

1 ELEVATION
SCALE 1:200

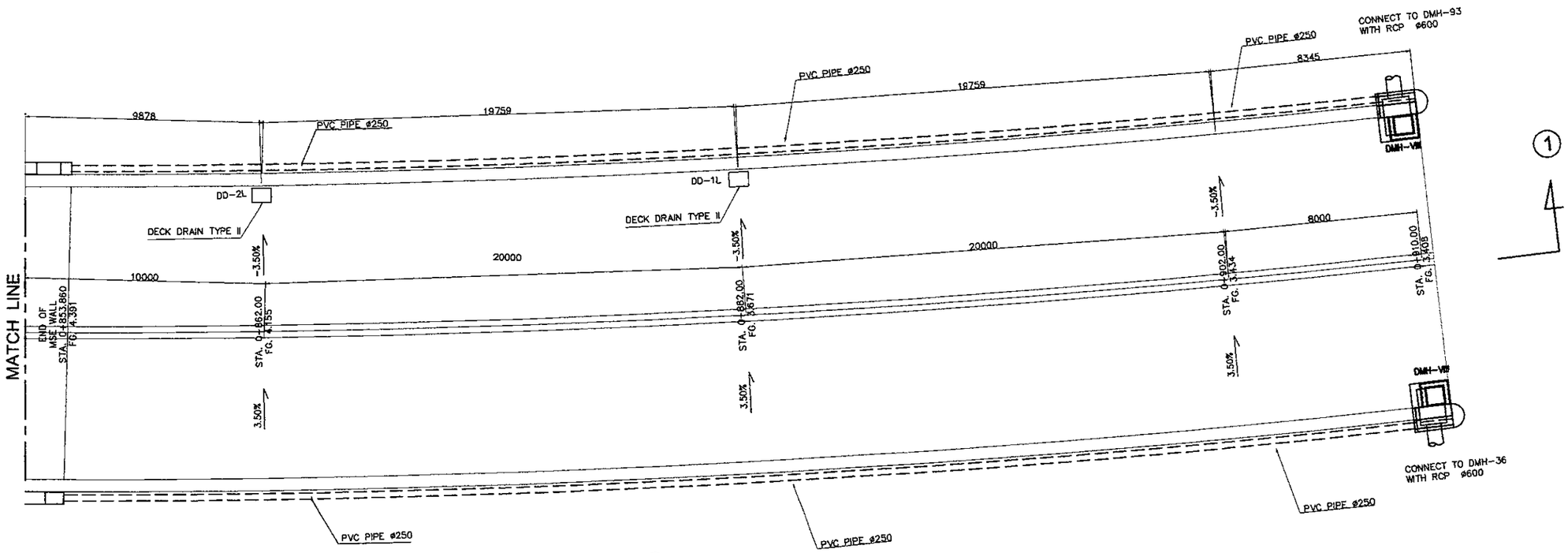

2 PLAN
SCALE 1:200

JAPAN INTERNATIONAL COOPERATION AGENCY / KATAHIRA & ENGINEERS INTERNATIONAL	DESIGNED BY	CHECKED BY	SUBMITTED BY	REPUBLIC OF INDONESIA MINISTRY OF PUBLIC WORKS DIRECTORATE GENERAL OF HIGHWAYS	PROJECT AND LOCATION :	SCALE :	DRAWING TITLE :	DRAWING NO :
	Name: R. UENO	Name: T. OKUMURA	Name: M. KIUCHI		DETAILED DESIGN STUDY OF NORTH JAVA CORRIDOR FLYOVER PROJECT TANGGULANGIN FLYOVER - CONTRACT PACKAGE 3 (PETERONGAN -TANGGULANGIN) EAST JAVA PROVINCE	1 : 10	TYPICAL DETAILS OF DECK DRAIN	TDV-030
	Sign	Sign	Sign	APPROVED BY: Ir. HERRY VAZA M,Eng.Sc NIP. : 110038400				SHEET NO :
	Date	Date	Date	Sign / Date		FULL SIZE A3		30 / 31

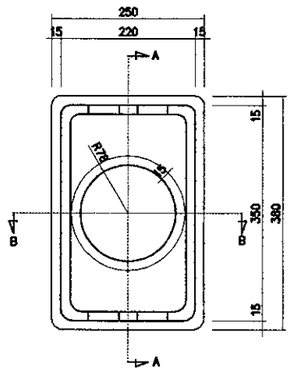

DRAIN BOX
SCALE 1:10

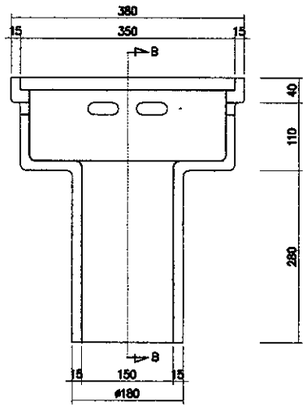

A SECTION A
SCALE 1:10

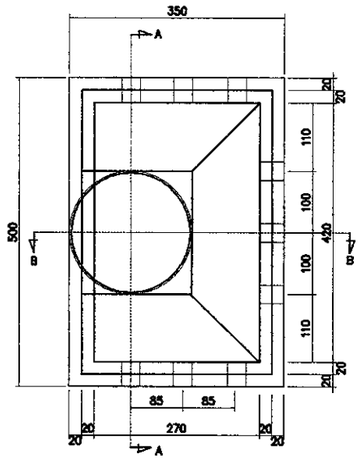

DRAIN BOX
SCALE 1:10

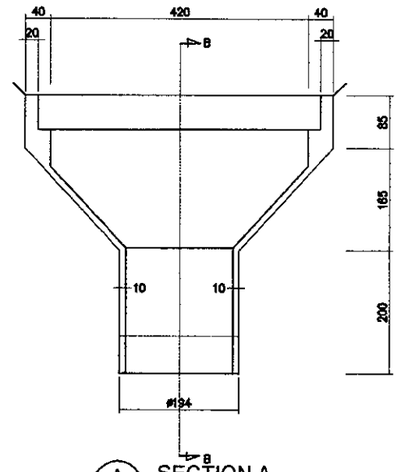

A SECTION A
SCALE 1:10

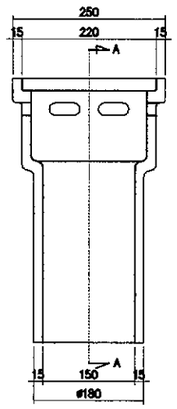

B SECTION B
SCALE 1:10

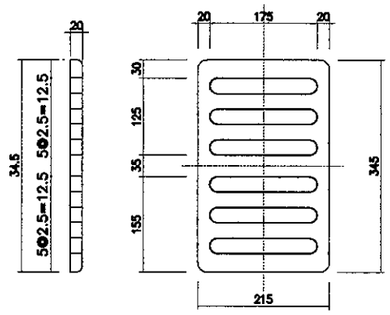

SCREEN
SCALE 1:10

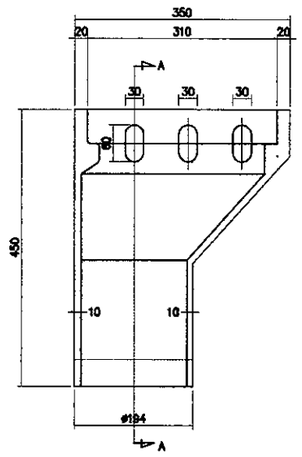

B SECTION B
SCALE 1:10

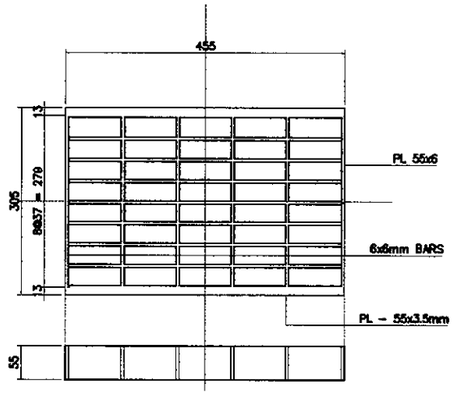

SCREEN
SCALE 1:10

LIST OF DECK DRAIN (PER ONE)

NO	NAME	QUALITY	EACH	WEIGHT
①	BOX	CAST IRON FC 25	1	40.9
②	SCREEN	SC 46	1	7.4
③	CHAIN	SS 41	1	0.1
④	WIRE NET	"	1	0.6
			TOTAL WEIGHT	49.0 kg

DECK DRAIN TYPE 1
SCALE 1:10

LIST OF DECK DRAIN (PER ONE)

NO	NAME	QUALITY	EACH	WEIGHT
①	BOX	CAST IRON FC 25	1	
②	SCREEN	SC 46	1	
③	CHAIN	SS 41	1	
④	WIRE NET	"	1	
			TOTAL WEIGHT	55.0 kg

DECK DRAIN TYPE 2
SCALE 1:10

JICA JAPAN INTERNATIONAL COOPERATION AGENCY / KEI KATAHIRA & ENGINEERS INTERNATIONAL	DESIGNED BY	CHECKED BY	SUBMITTED BY	REPUBLIC OF INDONESIA MINISTRY OF PUBLIC WORKS DIRECTORATE GENERAL OF HIGHWAYS	PROJECT AND LOCATION :	SCALE :	DRAWING TITLE :	DRAWING NO :
	Name R. UENO	Name T. OKUMURA	Name M. KIUCHI		DETAILED DESIGN STUDY OF NORTH JAVA CORRIDOR FLYOVER PROJECT TANGGULANGIN FLYOVER - CONTRACT PACKAGE 3 (PETERONGAN -TANGGULANGIN) EAST JAVA PROVINCE	1 : 20 1 : 100	TYPICAL DETAILS OF DECK DRAIN AND DS-5 AT APPROACH	TDV-031
	Sign	Sign	Sign	APPROVED BY Ir. HERRY VAZA M,Eng.Sc NIP. : 110038400 Sign		FULL SIZE A3		SHEET NO : 31 / 31
	Date	Date	Date	Date				

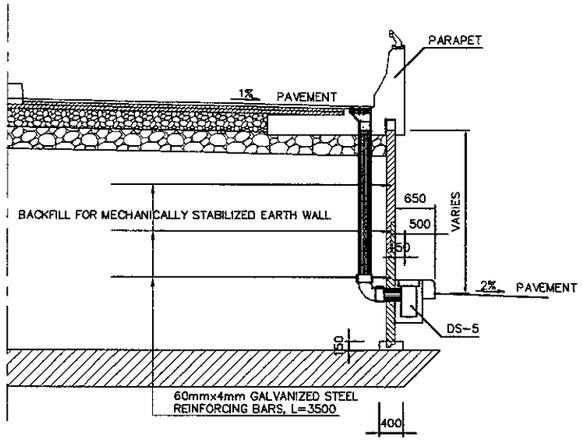

1A ELEVATION
SCALE 1:100

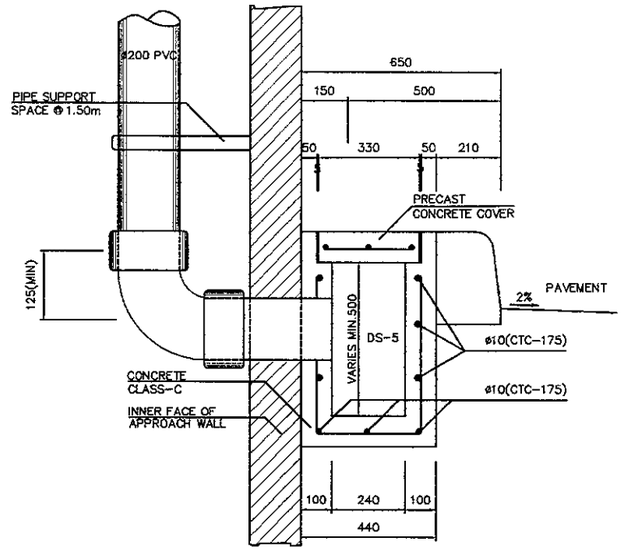

2A DS-5 DETAILS
SCALE 1:20

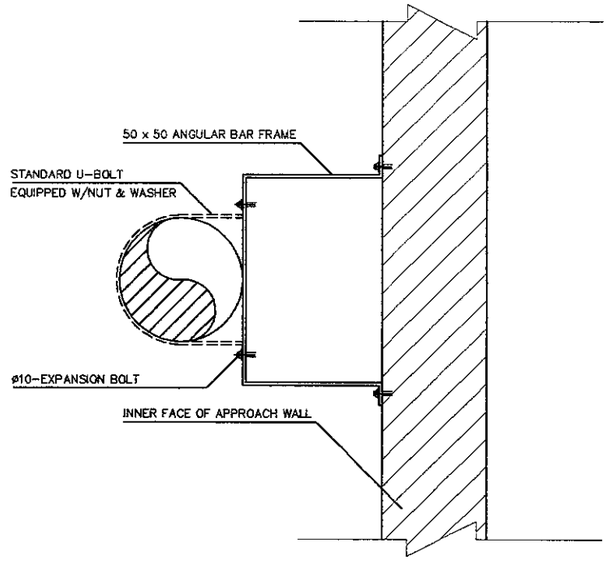

3 PIPE SUPPORT DETAIL
NO TO SCALE

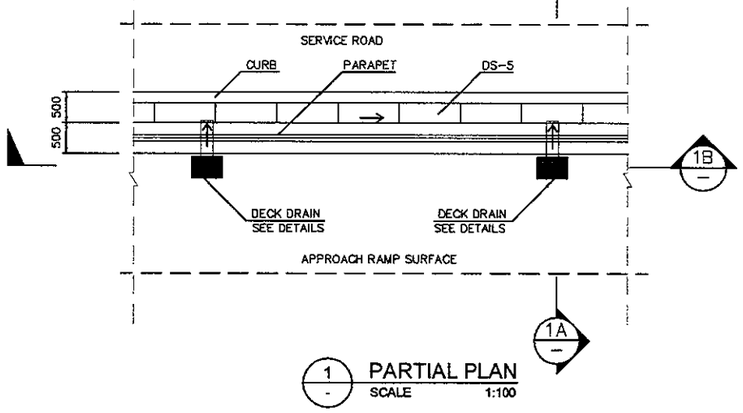

1 PARTIAL PLAN
SCALE 1:100

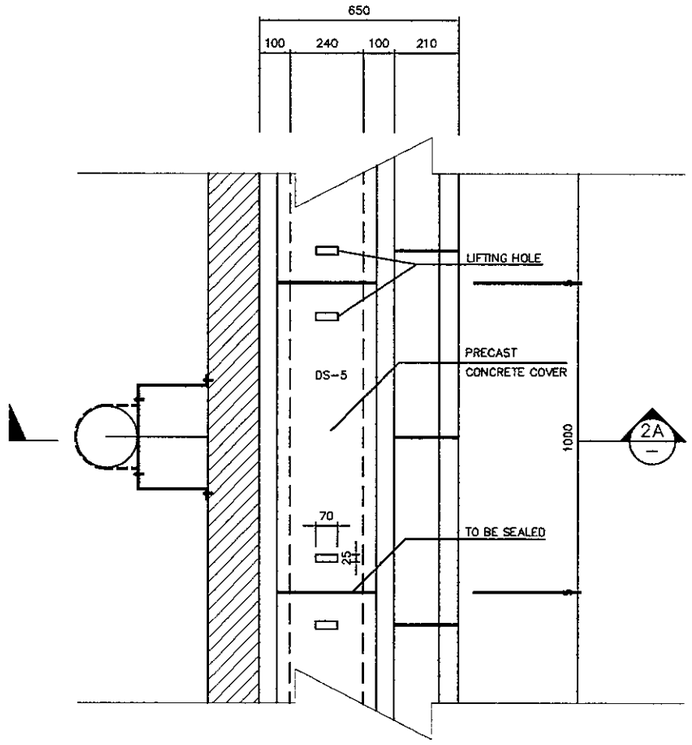

2 PLAN
SCALE 1:20

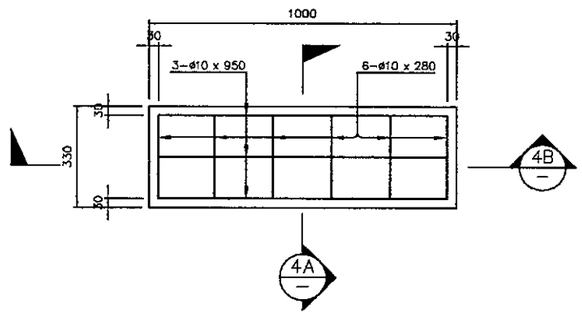

4 PLAN AT DS-5 COVER
SCALE 1:20

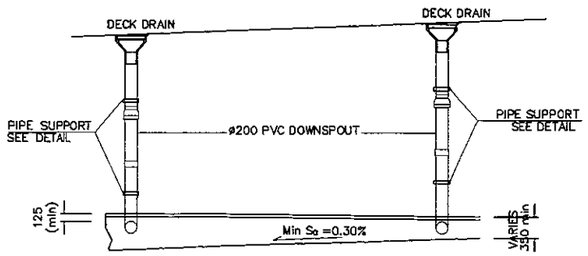

1B SECTION
SCALE 1:100

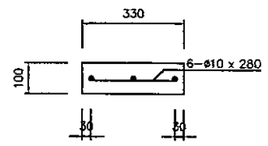

4A SECTION
SCALE 1:20

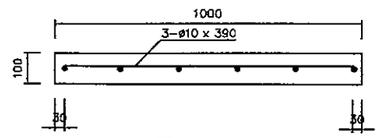

4B SECTION
SCALE 1:20

JAPAN INTERNATIONAL
COOPERATION AGENCY

DIRECTORATE GENERAL OF HIGHWAY
MINISTRY OF PUBLIC WORKS
REPUBLIC OF INDONESIA

STRUCTURES

KATAHIRA & ENGINEERS INTERNATIONAL

JAPAN INTERNATIONAL
COOPERATION AGENCY

DIRECTORATE GENERAL OF HIGHWAY
MINISTRY OF PUBLIC WORKS
REPUBLIC OF INDONESIA

STEEL SUPERSTRUCTURE

KATAHIRA & ENGINEERS INTERNATIONAL

JICA JAPAN INTERNATIONAL COOPERATION AGENCY / KEI KATAHIRA & ENGINEERS INTERNATIONAL	DESIGNED BY	CHECKED BY	SUBMITTED BY	REPUBLIC OF INDONESIA MINISTRY OF PUBLIC WORKS DIRECTORATE GENERAL OF HIGHWAYS	PROJECT AND LOCATION :	SCALE :	DRAWING TITLE :	DRAWING NO :
	Name: S. MATSUI	Name: T. OKUMURA	Name: M. KIUCHI		DETAILED DESIGN STUDY OF NORTH JAVA CORRIDOR FLYOVER PROJECT TANGGULANGIN FLYOVER - CONTRACT PACKAGE 3 (PETERONGAN - TANGGULANGIN) EAST JAVA PROVINCE	1 : 100 / 1 : 400	GENERAL DIMENSION OF STEEL SUPERSTRUCTURE (1 OF 3)	TST-01
	Sign	Sign	Sign	APPROVED BY: Ir. HERRY VAZA M.Eng.Sc NIP. : 110038400		FULL SIZE A3		SHEET NO : 01 / 46
	Date	Date	Date	Sign / Date				

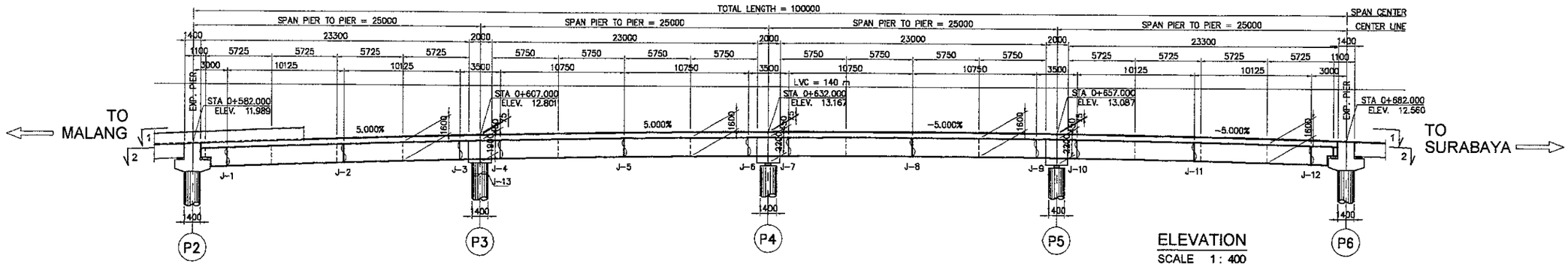

ELEVATION
SCALE 1 : 400

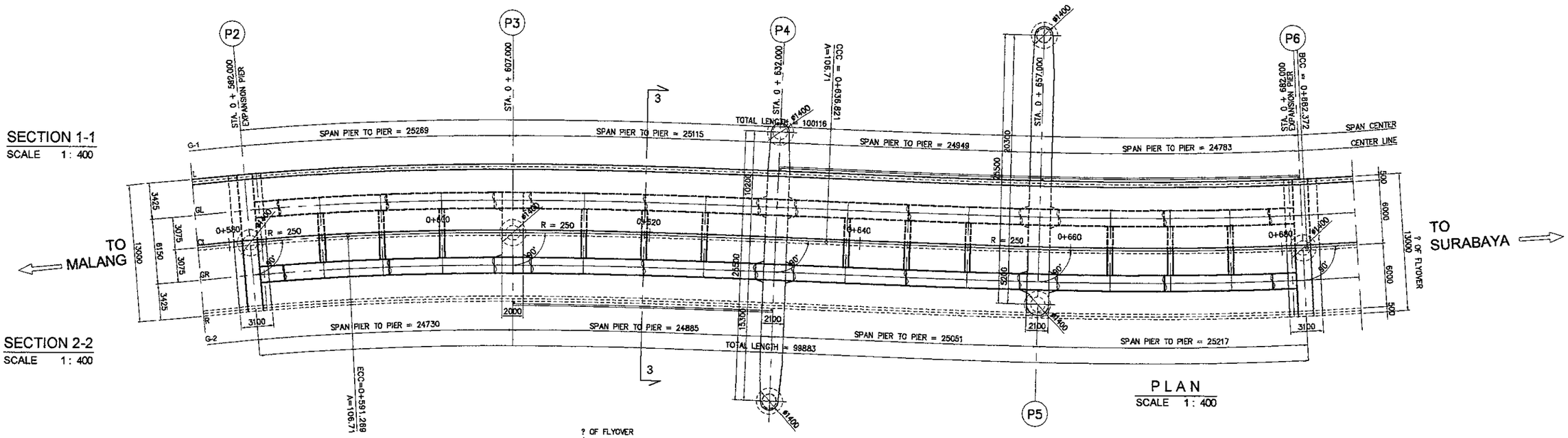

PLAN
SCALE 1 : 400

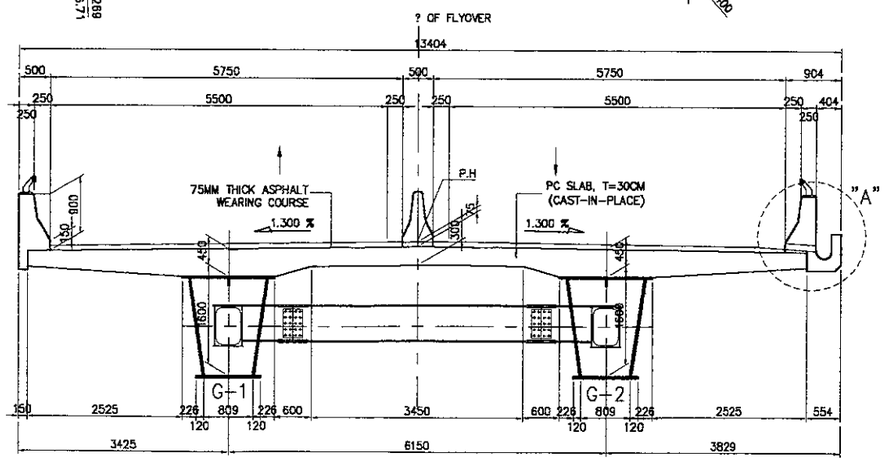

SECTION 3-3
SCALE 1 : 100

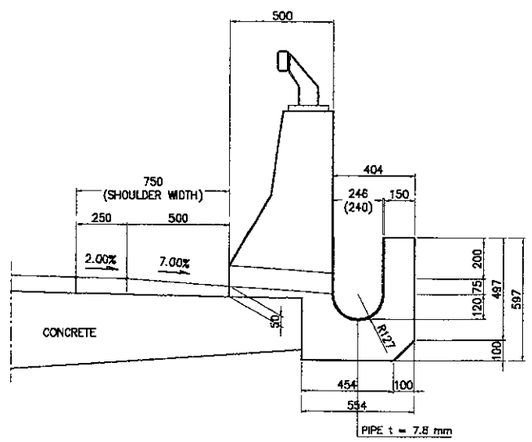

OUTER GUTTER (DETAIL - A)
SCALE 1 : 30

JICA JAPAN INTERNATIONAL COOPERATION AGENCY	DESIGNED BY	CHECKED BY	SUBMITTED BY	REPUBLIC OF INDONESIA MINISTRY OF PUBLIC WORKS DIRECTORATE GENERAL OF HIGHWAYS	PROJECT AND LOCATION :	SCALE :	DRAWING TITLE :	DRAWING NO :
KEI KATAHIRA & ENGINEERS INTERNATIONAL	Name: S. MATSUI	Name: T. OKUMURA	Name: M. KIUCHI	APPROVED BY: Ir. HERRY VAZA M.Eng.Sc NIP. : 110038400	DETAILED DESIGN STUDY OF NORTH JAVA CORRIDOR FLYOVER PROJECT TANGGULANGIN FLYOVER - CONTRACT PACKAGE 3 (PETERONGAN - TANGGULANGIN) EAST JAVA PROVINCE	1 : 200	GENERAL DIMENSION OF STEEL SUPERSTRUCTURE (2 OF 3)	TST-02
	Sign	Sign	Sign	Sign		FULL SIZE A3		SHEET NO : 02 / 46
	Date	Date	Date	Date				

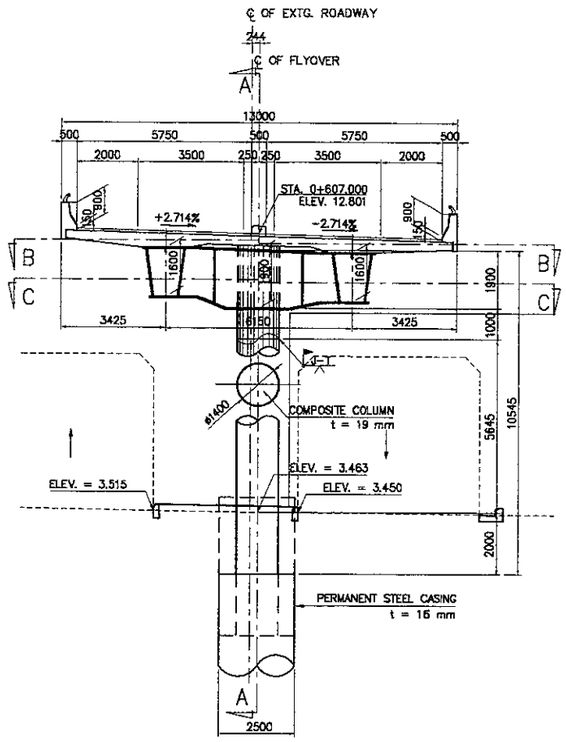

SECTION OF PIER - 3
SCALE 1 : 200

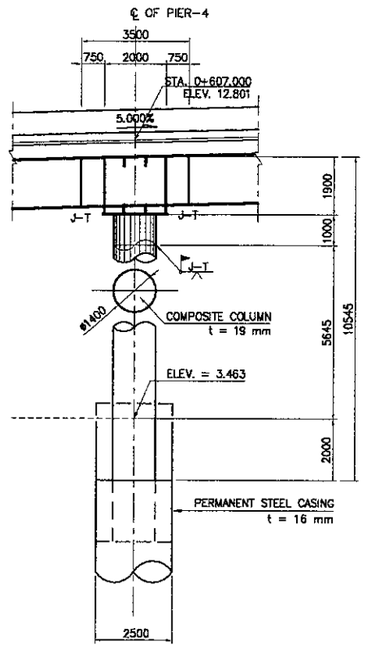

SECTION A-A
SCALE 1 : 200

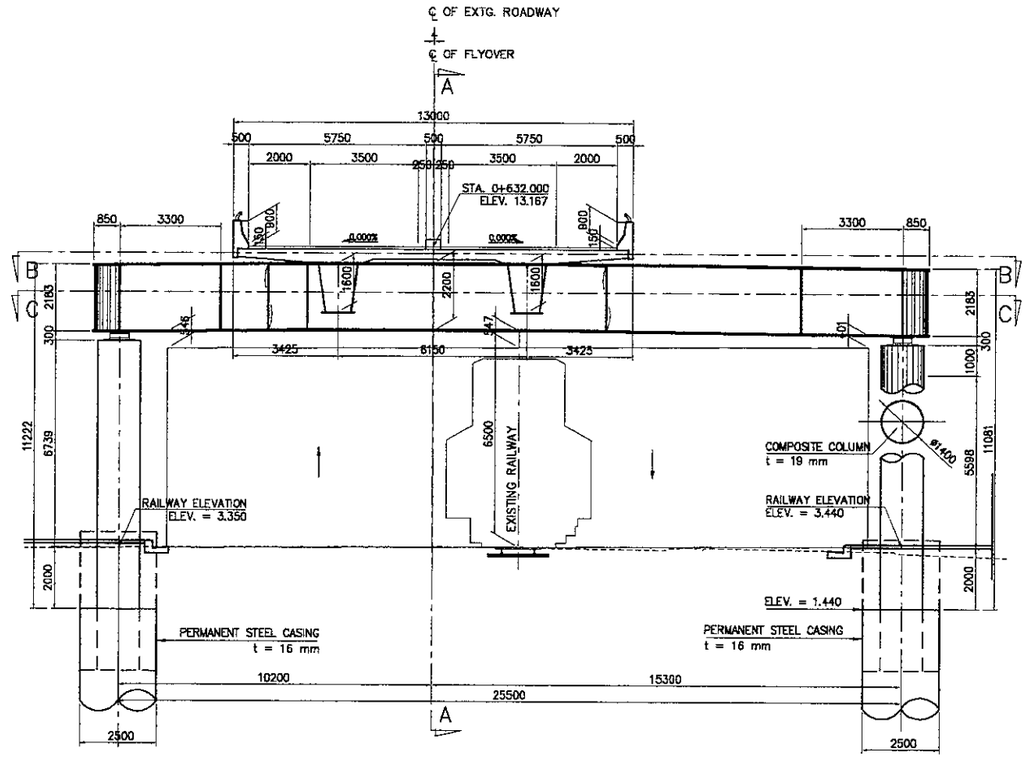

SECTION OF PIER - 4
SCALE 1 : 200

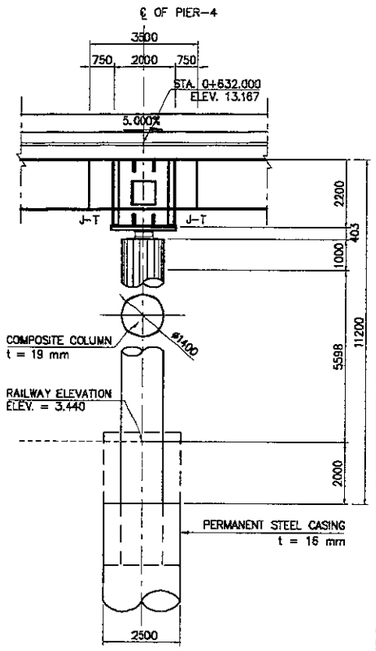

SECTION A-A
SCALE 1 : 200

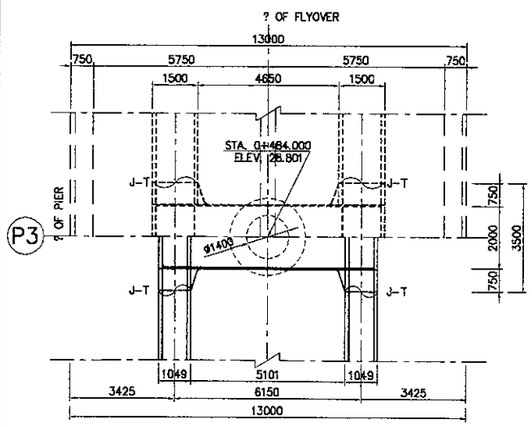

SECTION B-B
SCALE 1 : 200

SECTION C-C
SCALE 1 : 200

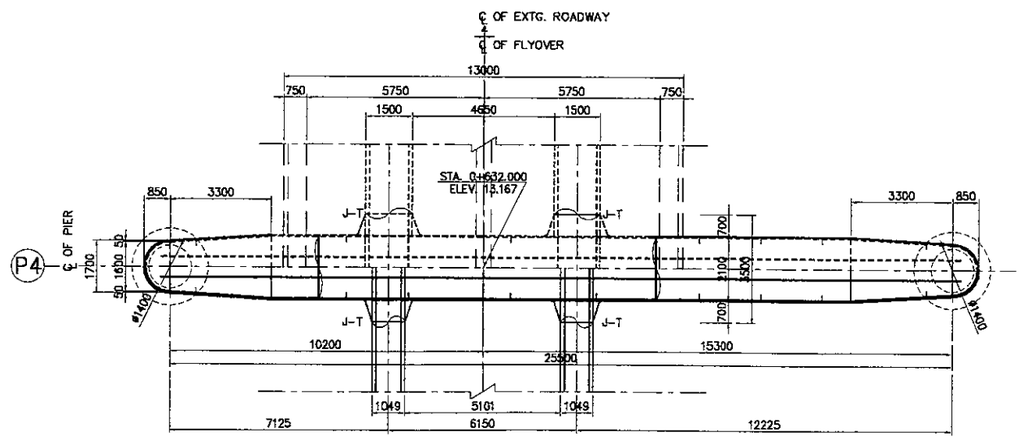

SECTION B-B
SCALE 1 : 200

SECTION C-C
SCALE 1 : 200

JAPAN INTERNATIONAL COOPERATION AGENCY / KATAHIRA & ENGINEERS INTERNATIONAL	DESIGNED BY	CHECKED BY	SUBMITTED BY	REPUBLIC OF INDONESIA MINISTRY OF PUBLIC WORKS DIRECTORATE GENERAL OF HIGHWAYS	PROJECT AND LOCATION :	SCALE :	DRAWING TITLE :	DRAWING NO :
	Name: S. MATSUI	Name: T. OKUMURA	Name: M. KIUCHI		DETAILED DESIGN STUDY OF NORTH JAVA CORRIDOR FLYOVER PROJECT TANGGULANGIN FLYOVER - CONTRACT PACKAGE 3 (PETERONGAN - TANGGULANGIN) EAST JAVA PROVINCE	1 : 200	GENERAL DIMENSION OF STEEL SUPERSTRUCTURE (3 OF 3)	TST-03
	Sign	Sign	Sign	APPROVED BY: Ir. HERRY VAZA M,Eng.Sc NIP. : 110038400		FULL SIZE A3		SHEET NO : 03 / 46
	Date	Date	Date	Sign / Date				

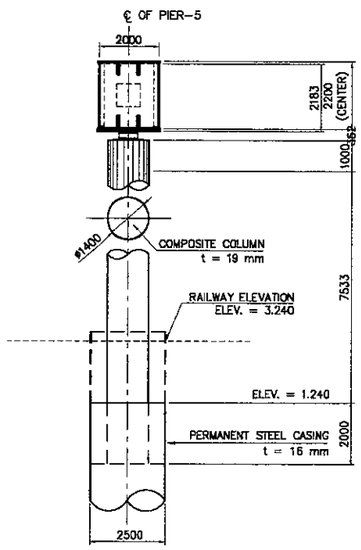

SECTION D-D
SCALE 1 : 200

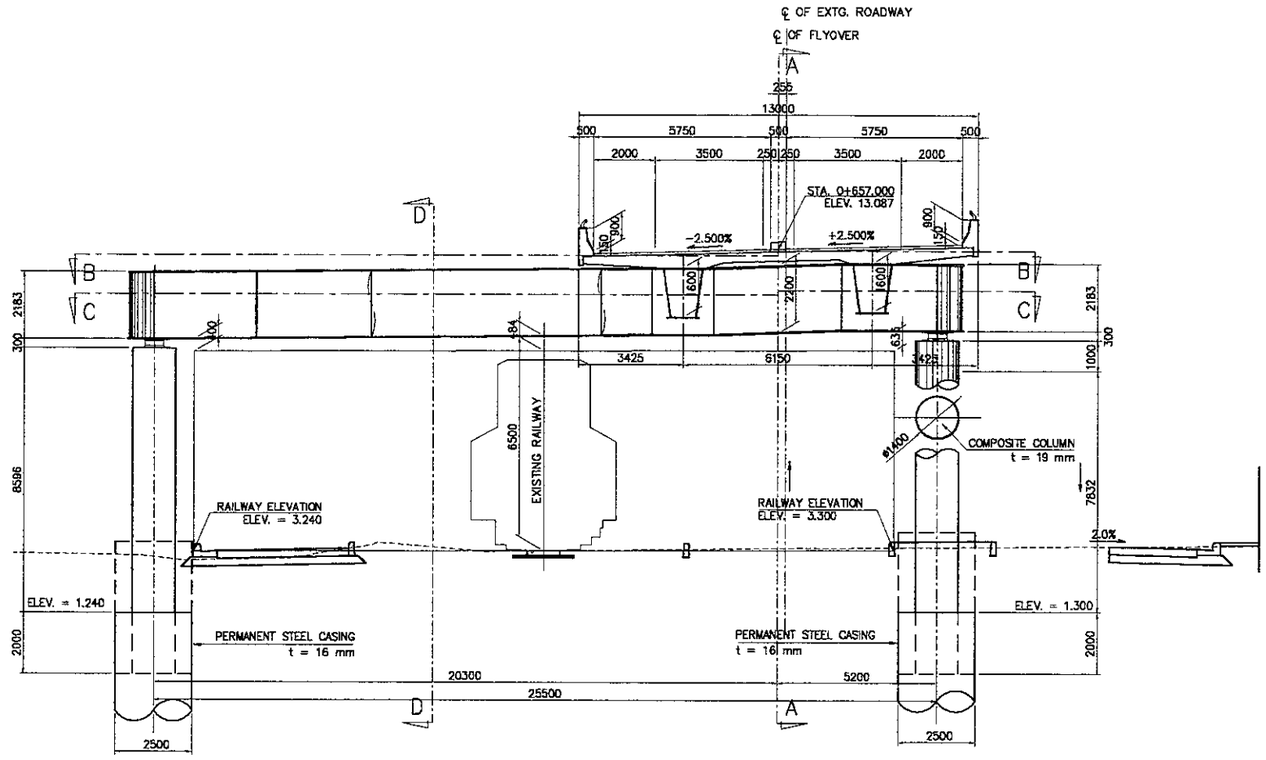

SECTION OF PIER - 5
SCALE 1 : 200

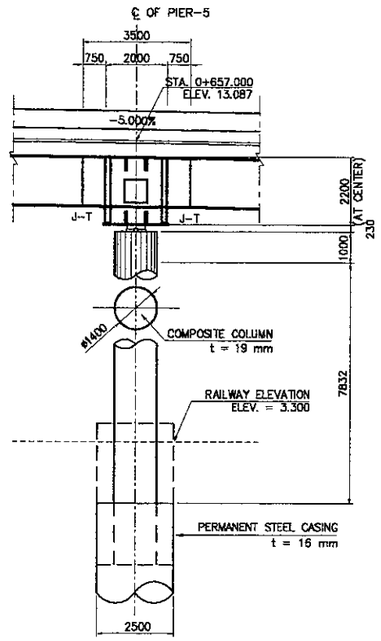

SECTION A-A
SCALE 1 : 200

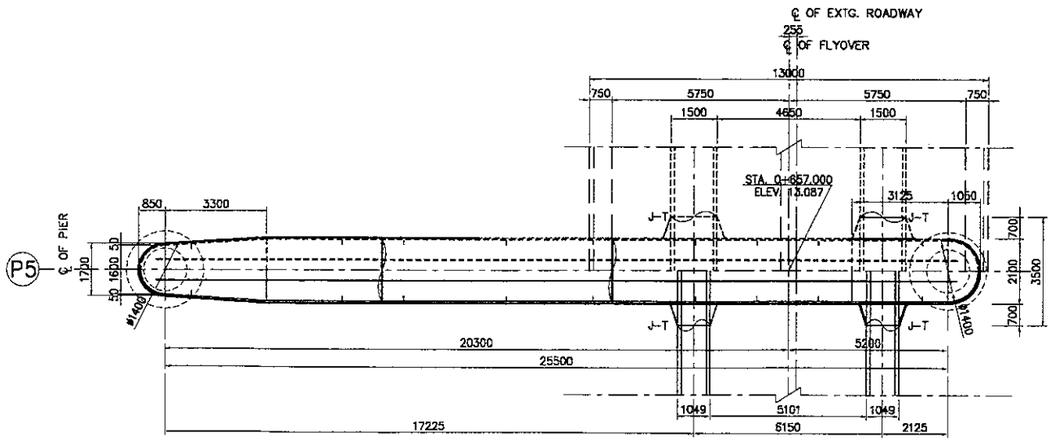

SECTION B-B
SCALE 1 : 200

SECTION C-C
SCALE 1 : 200

JICA JAPAN INTERNATIONAL COOPERATION AGENCY	DESIGNED BY	CHECKED BY	SUBMITTED BY	REPUBLIC OF INDONESIA MINISTRY OF PUBLIC WORKS DIRECTORATE GENERAL OF HIGHWAYS	PROJECT AND LOCATION :	SCALE :	DRAWING TITLE :	DRAWING NO :
KATAHIRA & ENGINEERS INTERNATIONAL	Name: S. MATSUI	Name: T. OKUMURA	Name: M. KIUCHI	APPROVED BY: Ir. HERRY VAZA M,Eng.Sc NIP. : 110038400	DETAILED DESIGN STUDY OF NORTH JAVA CORRIDOR FLYOVER PROJECT TANGGULANGIN FLYOVER - CONTRACT PACKAGE 3 (PETERONGAN - TANGGULANGIN) EAST JAVA PROVINCE	1 : 200 1 : 400	COORDINATES AND ELEVATION (1 OF 2)	TST-004
	Sign	Sign	Sign	Sign				SHEET NO :
	Date	Date	Date	Date		FULL SIZE A3		04 / 46

COORDINATES AND ELEVATION

LINE	SECTION	P2	GE1	S1	C1	C2	C3	P3B	P3	P3A	C4	C5	C6	P4B	P4	P4A	C7	C8	C9	P5B	P5	P5A	C10	C11	C12	S2	GE2	P6
L1	X	-0.5887	0.1583	0.5070	6.4696	12.3067	18.1319	23.9583	24.9583	25.9583	31.8099	37.6251	43.4202	49.1984	50.1977	51.1971	56.9486	62.6790	68.3914	74.0748	75.0745	76.0744	81.7332	87.3853	93.0176	98.5026	98.8522	99.6013
	Y	6.4733	6.5401	6.5706	7.0171	7.3197	7.4985	7.5707	7.5736	7.5738	7.5283	7.4151	7.2516	7.0548	7.0186	6.9819	6.7671	6.5587	6.3732	6.2271	6.2066	6.1879	6.1202	6.1295	6.2316	6.4363	6.4532	6.4912
	Z	12.8617	12.8946	12.9099	13.1660	13.3670	13.5276	13.6619	13.6823	13.7019	13.8015	13.8750	13.9214	13.9407	13.9413	13.9411	13.9240	13.8798	13.8086	13.7173	13.6990	13.6798	13.5550	13.4030	13.2239	13.0227	13.0090	12.9792
L2	X	-0.5751	0.1719	0.5206	6.4790	12.3128	18.1351	23.9585	24.9585	25.9585	31.8078	37.6214	43.4154	49.1929	50.1923	51.1916	56.9430	62.6738	68.3870	74.0718	75.0716	76.0714	81.7323	87.3867	93.0217	98.5104	98.8600	99.6091
	Y	6.3239	6.3907	6.4212	6.8674	7.1698	7.3485	7.4207	7.4236	7.4238	7.3783	7.2652	7.1017	6.9049	6.8687	6.8320	6.6173	6.4088	6.2232	6.0771	6.0566	6.0379	5.9702	5.9795	6.0817	6.2865	6.3034	6.3414
	Z	11.9617	11.9946	12.0100	12.2660	12.4670	12.6276	12.7619	12.7823	12.8019	12.9015	12.9750	13.0214	13.0407	13.0413	13.0411	13.0240	12.9798	12.9086	12.8173	12.7990	12.7798	12.6550	12.5030	12.3239	12.1227	12.1089	12.0792
L3	X	-0.5434	0.2036	0.5523	6.5011	12.3271	18.1425	23.9590	24.9590	25.9590	31.8029	37.6129	43.4044	49.1802	50.1795	51.1788	56.9300	62.6616	68.3766	74.0649	75.0647	76.0646	81.7304	87.3900	93.0313	98.5287	98.8783	99.6273
	Y	5.9753	6.0422	6.0726	6.5181	6.8201	6.9986	7.0707	7.0736	7.0738	7.0283	6.9153	6.7519	6.5552	6.5189	6.4823	6.2675	6.0590	5.8734	5.7271	5.7067	5.6880	5.6202	5.6295	5.7318	5.9370	5.9539	5.9918
	Z	12.0220	12.0550	12.0703	12.3263	12.5287	12.6913	12.8276	12.8484	12.8684	12.9701	13.0456	13.0940	13.1154	13.1163	13.1165	13.1014	13.0592	12.9900	12.9004	12.8823	12.8633	12.7400	12.5895	12.4119	12.2120	12.1984	12.1689
G1L	X	-0.3356	0.4115	0.7601	6.6458	12.4206	18.1908	23.9626	24.9626	25.9626	31.7705	37.5571	43.3318	49.0965	50.0958	51.0952	56.8443	62.5815	68.3088	74.0200	75.0197	76.0196	81.7174	87.4116	93.0941	98.6483	98.9979	99.7469
	Y	3.6898	3.7566	3.7870	4.2277	4.5270	4.7041	4.7757	4.7786	4.7788	4.7335	4.6209	4.4580	4.2617	4.2254	4.1888	3.9741	3.7654	3.5794	3.4326	3.4121	3.3934	3.3253	3.3346	3.4377	3.6451	3.6620	3.7000
	Z	11.9256	11.9589	11.9744	12.2299	12.4409	12.6172	12.7672	12.7905	12.8130	12.9282	13.0169	13.0785	13.1131	13.1163	13.1187	13.1169	13.0879	13.0319	12.9529	12.9366	12.9194	12.8057	12.6848	12.4969	12.3061	12.2932	12.2653
G1	X	-0.2785	0.4685	0.8172	6.6855	12.4463	18.2041	23.9636	24.9636	25.9636	31.7616	37.5418	43.3119	49.0735	50.0729	51.0722	56.8208	62.5596	68.2901	74.0076	75.0074	76.0072	81.7138	87.4175	93.1113	98.6811	99.0307	99.7797
	Y	3.0624	3.1292	3.1596	3.5989	3.8975	4.0743	4.1457	4.1486	4.1488	4.1036	3.9911	3.8283	3.6321	3.5959	3.5592	3.3445	3.1358	2.9497	2.8027	2.7822	2.7635	2.6953	2.7046	2.8079	3.0159	3.0329	3.0708
	Z	11.8992	11.9325	11.9480	12.2034	12.4169	12.5969	12.7508	12.7746	12.7978	12.9167	13.0090	13.0743	13.1124	13.1163	13.1194	13.1211	13.0958	13.0434	12.9673	12.9515	12.9348	12.8238	12.6855	12.5203	12.3320	12.3193	12.2917
G1R	X	-0.2214	0.5256	0.8743	6.7252	12.4720	18.2174	23.9646	24.9646	25.9646	31.7527	37.5265	43.2920	49.0505	50.0499	51.0492	56.7973	62.5376	68.2715	73.9953	74.9950	75.9949	81.7103	87.4234	93.1285	98.7139	99.0635	99.8126
	Y	2.4350	2.5018	2.5322	2.9702	3.2680	3.4444	3.5157	3.5186	3.5188	3.4737	3.3613	3.1987	3.0025	2.9663	2.9296	2.7150	2.5062	2.3199	2.1728	2.1523	2.1336	2.0653	2.0746	2.1781	2.3868	2.4037	2.4417
	Z	11.8727	11.9061	11.9217	12.1770	12.3928	12.5766	12.7340	12.7587	12.7826	12.9052	13.0011	13.0700	13.1118	13.1163	13.1200	13.1254	13.1037	13.0549	12.9818	12.9664	12.9502	12.8418	12.7062	12.5436	12.3578	12.3463	12.3182
L4	X	-0.0226	0.7244	1.0731	6.8636	12.5615	18.2636	23.9680	24.9680	25.9680	31.7217	37.4731	43.2226	48.9705	49.9699	50.9692	56.7154	62.4610	68.2066	73.9522	74.9520	75.9518	81.6979	87.4441	93.1886	98.8283	99.1779	99.9270
	Y	0.2490	0.3158	0.3462	0.7795	1.0749	1.2499	1.3207	1.3236	1.3238	1.2789	1.1670	1.0048	0.8090	0.7727	0.7361	0.5215	0.3125	0.1259	-0.0218	-0.0422	-0.0609	-0.1297	-0.1203	-0.0160	0.1947	0.2117	0.2497
	Z	11.7805	11.8142	11.8300	12.0848	12.3089	12.5058	12.6762	12.7033	12.7296	12.8652	12.9737	13.0552	13.1096	13.1163	13.1222	13.1402	13.1311	13.0950	13.0320	13.0184	13.0038	12.9046	12.7783	12.6249	12.4479	12.4361	12.4104
CL	X	0.0000	0.7470	1.0957	6.8794	12.5717	18.2689	23.9684	24.9684	25.9684	31.7182	37.4670	43.2147	48.9614	49.9607	50.9601	56.7061	62.4523	68.1992	73.9473	74.9471	75.9469	81.6965	87.4464	93.1954	98.8414	99.1909	99.8400
	Y	0.0000	0.0868	0.0972	0.5300	0.8251	1.0000	1.0707	1.0736	1.0738	1.0289	0.9170	0.7549	0.5591	0.5229	0.4863	0.2717	0.0627	-0.1240	-0.2717	-0.2922	-0.3109	-0.3797	-0.3702	-0.2660	-0.0549	-0.0380	0.0000
	Z	11.7700	11.8038	11.8195	12.0743	12.2993	12.4977	12.6696	12.6970	12.7236	12.8606	12.9706	13.0535	13.1094	13.1163	13.1225	13.1419	13.1342	13.0995	13.0378	13.0243	13.0100	12.9117	12.7865	12.6342	12.4582	12.4464	12.4209
R4	X	0.0226	0.7697	1.1183	6.8952	12.5818	18.2741	23.9688	24.9688	25.9688	31.7146	37.4610	43.2068	48.9523	49.9516	50.9510	56.6967	62.4435	68.1918	73.9424	74.9422	75.9420	81.6951	87.4488	93.2022	98.8544	99.2040	99.9530
	Y	-0.2490	-0.1822	-0.1518	0.2805	0.5753	0.7500	0.8207	0.8236	0.8238	0.7789	0.6671	0.5050	0.3093	0.2731	0.2364	0.0218	-0.1871	-0.3739	-0.5217	-0.5421	-0.5608	-0.6297	-0.6202	-0.5159	-0.3046	-0.2876	-0.2497
	Z	11.7595	11.7933	11.8090	12.0638	12.2897	12.4897	12.6630	12.6907	12.7176	12.8560	12.9675	13.0518	13.1091	13.1163	13.1227	13.1435	13.1373	13.1041	13.0435	13.0302	13.0161	12.9189	12.7947	12.6434	12.4684	12.4567	12.4314
G2L	X	0.2214	0.8685	1.3171	7.0336	12.6713	18.3204	23.9722	24.9722	25.9722	31.6836	37.4076	43.1375	48.8723	49.8716	50.8709	56.6148	62.3670	68.1269	73.8894	74.8892	75.8890	81.6827	87.4694	93.2623	98.9688	99.3184	100.0674
	Y	-2.4350	-2.3682	-2.3378	-1.9101	-1.6179	-1.4445	-1.3743	-1.3714	-1.3712	-1.4158	-1.5272	-1.6889	-1.8842	-1.9205	-1.9571	-2.1716	-2.3808	-2.5679	-2.7162	-2.7367	-2.7554	-2.8246	-2.8151	-2.7100	-2.4966	-2.4797	-2.4417
	Z	11.6673	11.7014	11.7173	11.9716	12.2058	12.4189	12.6051	12.6353	12.6646	12.8160	12.9400	13.0370	13.1069	13.1163	13.1249	13.1584	13.1648	13.1441	13.0938	13.0821	13.0697	12.9817	12.8668	12.7248	12.5586	12.5475	12.5236
G2	X	0.2785	1.0255	1.3742	7.0733	12.6970	18.3337	23.9732	24.9732	25.9732	31.6747	37.3923	43.1176	48.8493	49.8486	50.8480	56.5913	62.3450	68.1083	73.8870	74.8868	75.8866	81.6791	87.4753	93.2795	99.0016	99.3512	100.1002
	Y	-3.0624	-2.9956	-2.9652	-2.5389	-2.2474	-2.0744	-2.0043	-2.0014	-2.0012	-2.0458	-2.1571	-2.3186	-2.5138	-2.5500	-2.5867	-2.8012	-3.0104	-3.1976	-3.3461	-3.3666	-3.3853	-3.4548	-3.4451	-3.3398	-3.1258	-3.1088	-3.0708
	Z	11.6409	11.6750	11.6910	11.9451	12.1817	12.3985	12.5885	12.6194	12.6494	12.8045	12.9321	13.0327	13.1063	13.1163	13.1255	13.1626	13.1727	13.1556	13.1082	13.0970	13.0851	12.9997	12.8875	12.7481	12.5844	12.5736	12.5500
G2R	X	0.3356	1.0826	1.4313	7.1130	12.7227	18.3469	23.9741	24.9741	25.9741	31.6658	37.3770	43.0976	48.8263	49.8257	50.8250	56.5678	62.3230	68.0897	73.8747	74.8745	75.8743	81.6756	87.4813	93.2967	99.0344	99.3840	100.1331
	Y	-3.6898	-3.6230	-3.5926	-3.1676	-2.8768	-2.7042	-2.6343	-2.6314	-2.6312	-2.6757	-2.7869	-2.9483	-3.1434	-3.1796	-3.2163	-3.4307	-3.6400	-3.8274	-3.9760	-3.9965	-4.0152	-4.0846	-4.0751	-3.9696	-3.7549	-3.7380	-3.7000
	Z	11.6144	11.6486	11.6646	11.9187	12.1577	12.3782	12.5719	12.6035	12.6343	12.7930	12.9243	13.0285	13.1056	13.1163	13.1262	13.1669	13.1805	13.1671	13.1227	13.1120	13.1004	13.0178	12.9081	12.7714	12.6103	12.5996	12.5765
R3	X	0.5434	1.2904	1.6391	7.2577	12.8163	18.3853	23.9777	24.9777	25.9777	31.6334	37.3212	43.0251	48.7426	49.7420	50.7413	56.4822	62.2429	68.0219	73.8297	74.8295	75.8293	81.6626	87.5028	93.3595	99.1540	99.5036	100.2527
	Y	-5.9753	-5.9086	-5.8782	-5.4580	-5.1699	-4.9887	-4.9293	-4.9264	-4.9262	-4.8705	-5.0812	-5.2421	-5.4369	-5.4731	-5.5098	-5.7241	-5.9336	-6.1214	-6.2706	-6.2910	-6.3097	-6.3796	-6.3700	-6.2637	-6.0468	-6.0298	-5.9918
	Z	11.5180	11.5526	11.5687	11.8223	12.0699	12.3042	12.5113	12.5456	12.5790	12.7511	12.8956	13.0130	13.1033	13.1163	13.1285	13.1824	13.2092	13.2090	13.1753	13.1663	13.1565	13.0834	12.9835	12.8565	12.7046	12.6946	12.6729
R2	X	0.5751	1.3221	1.6708	7.2798	12.8305	18.4027	23.9783	24.9783	25.9783	31.6285	37.3126	43.0141	48.7299	49.7292	50.7286	56.4691	62.2307	68.0115	73.8228	74.8226	75.8224	81.6606	87.5061	93.3691	99.1723	99.5219	100.2709
	Y	-6.3239	-6.2571	-6.2268	-5.8073	-5.5197	-5.3486	-5.2793	-5.2764	-5.2762	-5.3205	-5.4311	-5.5920	-5.7866	-5.8229	-5.8595	-6.0739	-6.2834	-6.4712	-6.6205	-6.6410	-6.6597	-6.7296	-6.7200	-6.6136	-6.3964	-6.3794	-6.3414
	Z	11.4283	11.4629	11.4791	11.7326	11.9815	12.2179	12.4271	12.4617	12.4955	12.6697	12.8162	12.9356	13.0280	13.0413	13.0538	13.1097	13.1386	13.1404	13.1083	13.0996	13.0900	13.0185	12.9200	12.7944	12.6440	12.6341	12.6126
R1	X	0.5887	1.3357	1.6844	7.2892	12.8366	18.4058	23.9785	24.9785	25.9785	31.6284	37.3090	43.0093	48.7244	49.7238	50.7231	56.4635	62.2255	68.0071	73.8199	74.8197	75.8195	81.6598	87.5075	93.3732	99.1801	99.5297	100.2787
	Y	-6.4733	-6.4065	-6.3761	-5.9570	-5.6695	-5.4986	-5.4293	-5.4264	-5.4262	-5.4704	-5.5810	-5.7419	-5.9365	-5.9728	-6.0094	-6.2238	-6.4333	-6.6211	-6.7705	-6.7909	-6.8097	-6.8796	-6.8700	-6.7635	-6.5462	-6.5292	-6.4912
	Z	12.3283	12.3630	12.3791	12.6326	12.8815	13.1179	13.3271	13.3617	13.3955	13.5697	13.7162	13.8356	13.9280	13.9413	13.9538	14.0097	14.0386	14.0404	14.0083	13.9996	13.9900	13.9185	13.8200	13.6944	13.5440	13.5341	13.5126

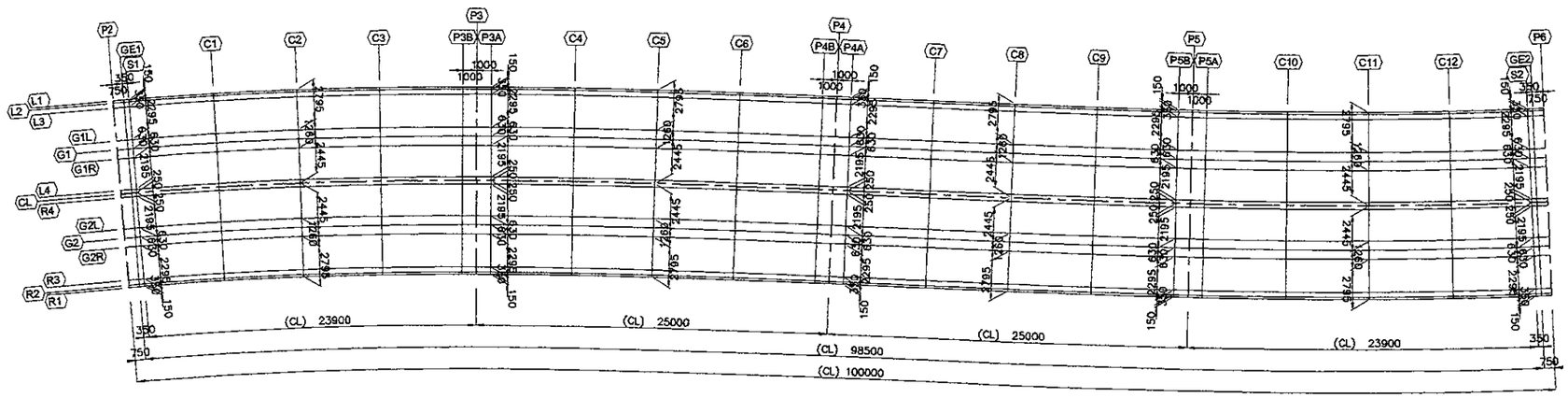

PLAN VIEW

SCALE 1:400

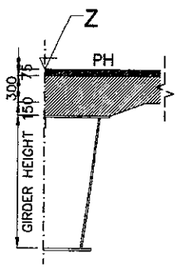

ELEVATION REFERENCE

NOT TO SCALE

JAPAN INTERNATIONAL COOPERATION AGENCY / KATAHIRA & ENGINEERS INTERNATIONAL	DESIGNED BY	CHECKED BY	SUBMITTED BY	REPUBLIC OF INDONESIA MINISTRY OF PUBLIC WORKS DIRECTORATE GENERAL OF HIGHWAYS	PROJECT AND LOCATION :	SCALE :	DRAWING TITLE :	DRAWING NO :
	Name: S. MATSUI	Name: T. OKUMURA	Name: M. KIUCHI		DETAILED DESIGN STUDY OF NORTH JAVA CORRIDOR FLYOVER PROJECT TANGGULANGIN FLYOVER - CONTRACT PACKAGE 3 (PETERONGAN - TANGGULANGIN) EAST JAVA PROVINCE	1 : 200 1 : 400	COORDINATES AND ELEVATION (2 OF 2)	TST-05
	Sign	Sign	Sign	APPROVED BY: Ir. HERRY VAZA M,Eng.Sc NIP. : 110038400				SHEET NO :
	Date	Date	Date	Sign / Date		FULL SIZE A3		05 / 46

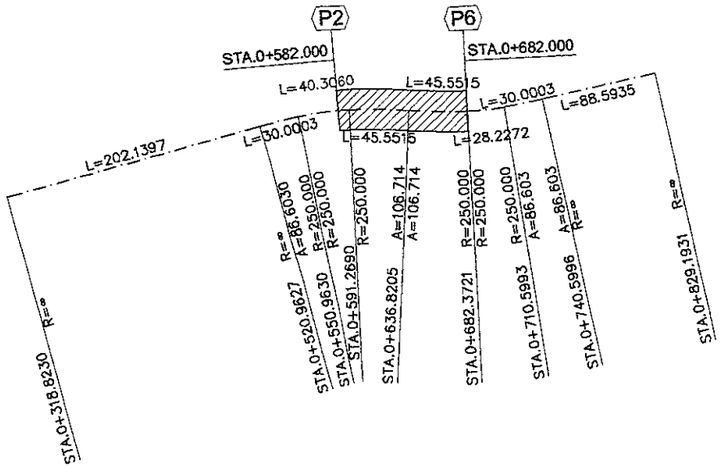

KEY PLAN

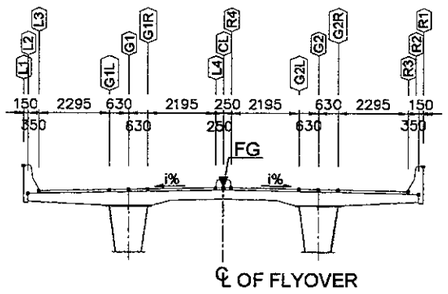

SECTION VIEW

SCALE 1:200

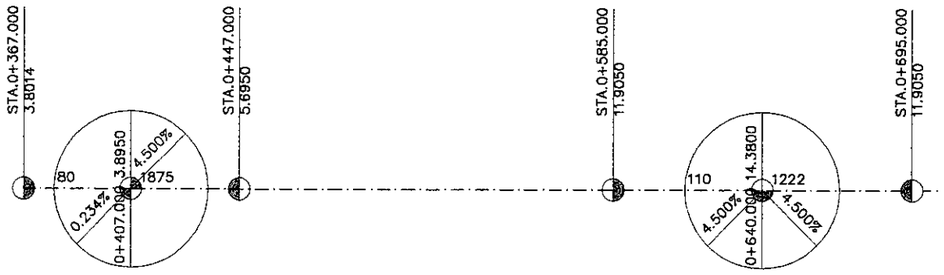

ELEMENT OF VERTICAL ALIGNMENT

NOT TO SCALE

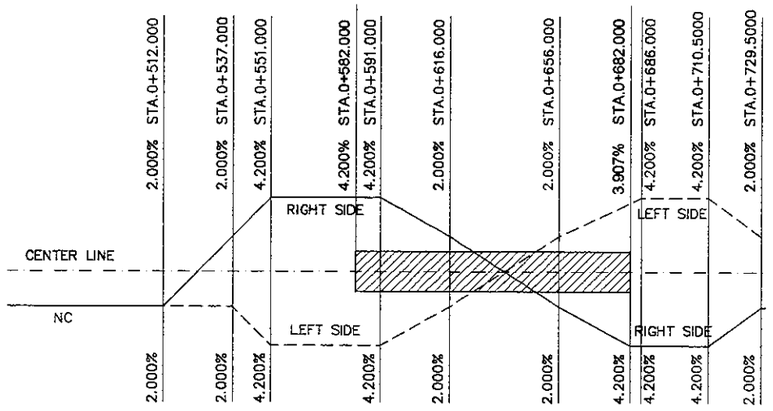

SUPER ELEVATION

NOT TO SCALE

JICA JAPAN INTERNATIONAL COOPERATION AGENCY / KEI KATAHIRA & ENGINEERS INTERNATIONAL	DESIGNED BY	CHECKED BY	SUBMITTED BY	REPUBLIC OF INDONESIA MINISTRY OF PUBLIC WORKS DIRECTORATE GENERAL OF HIGHWAYS	PROJECT AND LOCATION :	SCALE :	DRAWING TITLE :	DRAWING NO :
	Name: S. MATSUI	Name: T. OKUMURA	Name: M. KIUCHI		DETAILED DESIGN STUDY OF NORTH JAVA CORRIDOR FLYOVER PROJECT TANGGULANGIN FLYOVER - CONTRACT PACKAGE 3 (PETERONGAN - TANGGULANGIN) EAST JAVA PROVINCE	NOT TO SCALE	TABLE OF QUANTITIES	TST-06
	Sign:	Sign:	Sign:	APPROVED BY: Ir. HERRY VAZA M,Eng.Sc NIP. : 110038400				SHEET NO :
	Date:	Date:	Date:	Sign: / Date:		FULL SIZE A3		06 / 46

MAIN GIRDER

KIND	MATERIAL	PLATE THICKNESS (mm)	P3– P6 (3 SPAN) MAIN GIRDER (kg)	CROSS BEAM (kg)	TOTAL
PL	SMA490CW	52	376		376
		50	118		118
		46	220		220
		42	201		201
	SMA490CW SUB – TOTAL		915		915
	SMA490BW	40		7,671	7,671
		30	8,338		8,338
		23	7,518		7,518
		22	7,224		7,224
		21	41,058		41,058
		20	6,626		6,626
		18	10,752		10,752
	SMA490BW SUB – TOTAL		81,516	7,671	89,187
	SMA490AW	15	58,131		58,131
		14	5,458		5,458
		13	2,851		2,851
		12	2,151		2,151
		11	36		36
		10	1,617		1,617
		9	236	768	1,004
	SMA490AW SUB – TOTAL		70,480	768	71,248
	SM490YB	24		1,230	1,230
		22	5,714	1,026	6,740
		19	3,212		3,212
		18	1,636		1,636
	SM490YB SUB – TOTAL		10,562	2,256	12,818
	SM490YA	16	224		224
		15	2,850	38	2,888
		14	200		200
		13	476		476
		12	1,332		1,332
		11	252		252
		10	2,129		2,129
		9	208	1,574	1,782
	SM490YA SUB – TOTAL		7,671	1,612	9,283
	SMA400AW	24		1,404	1,404
		19	32		32
		16	42		42
		15	542		542
		14	43	720	763
		13		1,968	1,968
		12	62	384	446
		11	48		48
		10	52		52
		9	616		616
		8	125		125
		6	56		56
	SMA400AW SUB – TOTAL		1,618	4,476	6,094
	SM400A	24		2,076	2,076
		10	1,816	240	2,056
		9	464	2,832	3,296
	SM400A SUB – TOTAL		2,280	5,148	7,428
	SS400	19	212		212
		9		54	54
		6	36		36
		3.2	88		88
	SS400 SUB – TOTAL		336	54	390
	SPA-H	3.2	92		92
PL TOTAL			175,470	21,985	197,455
H	SMA400AW	700x300x13x24		8,886	8,886
SGP	SGP	20A	16		16
PIPE	STK400	267.4x6.6	156		156
		101.6x4.2		36	36
PIPE TOTAL			156	36	192
RB	SR235	ø13	16		16
TOTAL 1			175,658	30,907	206,565
STUD	STUD	ø22x150	778		778
TCB	S10T	M22	334		334
	S10TW	M22	5,561	756	6,317
TCB TOTAL			5,895	756	6,651
BN	SS400	M16	16	10	26
TOTAL 2			6,689	766	7,455
GRAND TOTAL			182,347	31,673	214,020

BOLT NUMBER

KIND	MATERIAL	DIMENSION (mm)	P3– P6 (3 SPAN) MAIN GIRDER	CROSS BEAM	TOTAL (nos)	NOTES
TCB	S10T	M22 x 90	182		182	
		M22 x 85	272		272	
		M22 x 80	94		94	
		M22 x 75	40		40	
	S10T TOTAL		588		588	
	S10TW	M22 x 105	1,300		1,300	
		M22 x 100	612		612	
		M22 x 95	768		768	
		M22 x 90	1,384	384	1,768	
		M22 x 85	256	384	640	
		M22 x 80	2,048		2,048	
		M22 x 75	1,140	576	1,716	
		M22 x 70	2,340		2,340	
	S10TW TOTAL		9,848	1,344	11,192	
TCB TOTAL			10,436	1,344	11,780	
BN	SS400	M16 x 65		24	24	
		M16 x 55		32	32	
		M16 x 45	64		64	
BN TOTAL			64	56	120	
GRAND TOTAL			10,500	1,400	11,900	

T-TYPE GIRDER P3

MATERIAL	PLATE THICKNESS (mm)	WEIGHT (kg)	NOTES
SMA 490BW	32.00	4,710.90	
	25.00	5,007.60	
	24.00	3,919.20	
	TOTAL	13,637.70	
SMA 490AW	16.00	51.20	
	15.00	1,847.70	
	TOTAL	1,898.90	
SM 490YB	34.00	855.60	
	32.00	92.30	
	30.00	1,711.00	
	24.00	69.20	
	22.00	412.70	
	TOTAL	3,140.80	
SM 490YA	16.00	69.00	
	15.00	735.70	
	TOTAL	804.70	
SM 400A	28.00	704.60	
	20.00	1,996.00	
	10.00	36.80	
	9.00	477.80	
	TOTAL	3,215.20	
SS 400	9.00	21.40	
PLATE TOTAL		22,718.70	
SKK 400	20.00	1,273.50	w=681kg/lm
	20.00	681.00	w=681kg/lm, w/ Inner Rib
SS 400	BN M16	2.00	Galvanized
SUB TOTAL		1,958.50	
GRAND TOTAL		24,675.20	

PORTAL-TYPE GIRDER P4

MATERIAL	PLATE THICKNESS (mm)	BLOCK–1	BLOCK–2	BLOCK–3	TOTAL	NOTES
SMA 570W	40		15,913.30		15,913.30	
	22		529.60		529.60	
	19		6,915.50		6,915.50	
	15		1,084.30		1,084.30	
	TOTAL		24,442.70		24,442.70	
SMA 490BW	36	6,044.80		11,976.10	18,020.90	
	22	285.40		285.40	570.80	
	19	3,929.80		5,197.80	9,127.60	
	TOTAL	10,260.00		17,459.30	27,719.30	
SMA 490AW	16	242.60		242.60	485.20	
	12	291.90		292.00	583.90	
	TOTAL	534.50		534.60	1,069.10	
SMA 400AW	23	100.90		100.90	201.80	
	9	31.90		31.90	63.80	
	TOTAL	132.80		132.80	265.60	
SM 570	36		4,439.80		4,439.80	
	28		704.60		704.60	
	22		1,275.80		1,275.80	
	19		165.00		165.00	
	15		1,460.20		1,460.20	
	TOTAL		8,045.40		8,045.40	
SM 490YB	36	3,932.00		4,780.30	8,712.30	
	22	500.40		500.40	1,000.80	
	19	457.90		457.90	915.80	
	TOTAL	4,890.30		5,738.60	10,628.90	
SM 490YA	12	291.90		292.00	583.90	
SM400A	16	83.60	419.00	270.70	773.30	
	10	46.20	23.10	46.20	115.50	
	9	592.70	295.70	606.10	1,494.50	
	TOTAL	722.50	737.80	923.00	2,383.30	
SS 400A	45	57.00		57.00	114.00	
PLATE TOTAL		16,889.00	33,225.90	25,137.30	75,252.20	
S 10TW	TCB Bolt	719.90		719.90	1,439.80	
S 10T	TCB Bolt	151.00		151.00	302.00	
SR 235	Dia 13	0.30		0.30	0.60	Galvanized
SS 400	BN M16	0.50		0.50	1.00	Galvanized
SGP	20A	0.50		0.50	1.00	Galvanized
SUB TOTAL		872.20		872.20	1,744.40	
GRAND TOTAL		17,761.20	33,225.90	26,009.50	76,996.60	

PORTAL-TYPE GIRDER P5

MATERIAL	PLATE THICKNESS (mm)	BLOCK–1	BLOCK–2	BLOCK–3	TOTAL	NOTES
SMA570W	40.00			15,402.50	15,402.50	
	28.00			674.00	674.00	
	19.00			8,016.40	8,016.40	
	15.00			1,084.30	1,084.30	
	TOTAL			25,177.20	25,177.20	
SMA490BW	36.00		8,833.40		8,833.40	
	19.00		4,890.70		4,890.70	
	TOTAL		13,724.10		13,724.10	
SMA490AW	16.00		242.60		242.60	
	12.00		292.00		292.00	
	TOTAL		534.60		534.60	
SMA400BW	36.00	8,845.40			8,845.40	
SMA400AW	30.00			234.00	234.00	
	22.00	51.90			51.90	
	19.00	5,647.10			5,647.10	
	16.00	164.30			164.30	
	12.00	473.50			473.50	
	9.00	31.90	31.90		63.80	
	TOTAL	6,368.70	31.90	234.00	6,634.60	
SM570	36.00			6,316.00	6,316.00	
	28.00			1,612.30	1,612.30	
	22.00			562.60	562.60	
	16.00			121.60	121.60	
	15.00			1,460.20	1,460.20	
	TOTAL			10,072.70	10,072.70	
SM490YB	36.00		3,353.10		3,353.10	
	22.00		215.00		215.00	
	19.00		621.80		621.80	
	TOTAL		4,189.90		4,189.90	
SM490YA	16.00		311.10		311.10	
	22.00		292.00		292.00	
	9.00		11.70		11.70	
	TOTAL		614.80		614.80	
SM400B	36.00	4,827.40			4,827.40	
SM400A	22.00	155.30			155.30	
	19.00	301.10			301.10	
	16.00	515.10	85.00	414.60	1,014.70	
	12.00	473.50			473.50	
	10.00	23.10	46.20	23.10	92.40	
	9.00	331.30	596.30	296.80	1,224.40	
	TOTAL	1,799.40	727.50	734.50	3,261.40	
SS400A	4.50		57.00		57.00	
PLATE TOTAL		21,840.90	19,879.80	36,218.40	77,939.10	
S10TW	TCB Bolt	602.20	723.60		1,325.80	
S10T	TCB Bolt	100.70	151.00		251.70	
SR235		0.30	0.30		0.60	Galvanized
SGP	20A	0.50	0.50		1.00	Galvanized
SS400A	BN M16	0.50	0.50		1.00	Galvanized
SUB TOTAL		704.20	875.90		1,580.10	
GRAND TOTAL		22,545.10	20,755.70	36,218.40	79,519.20	

DECK SLAB, WATERPROOFING AND PAVEMENT

ITEM	UNIT	QUANTITY	NOTES
DECK SLAB : – CONCRETE	m³	428.204	
– PC. CABLE	kg	5,173.58	
– REINFORCEMENT	kg	43,026.24	
WATERPROFING	m²	1,167.25	
PAVEMENT	m³	–	HIGHWAY PORTION

PAINT AREA

ITEM	UNIT	QUANTITY	NOTES
INNER AREA	m²	1,973.38	
OUTER AREA	m²	1,534.21	
CONCRETE CONTACT AREA	m²	301.31	

JAPAN INTERNATIONAL COOPERATION AGENCY / KATAHIRA & ENGINEERS INTERNATIONAL	DESIGNED BY	CHECKED BY	SUBMITTED BY	REPUBLIC OF INDONESIA MINISTRY OF PUBLIC WORKS DIRECTORATE GENERAL OF HIGHWAYS	PROJECT AND LOCATION :	SCALE :	DRAWING TITLE :	DRAWING NO :
	Name: S. MATSUI	Name: T. OKUMURA	Name: M. KIUCHI		DETAILED DESIGN STUDY OF NORTH JAVA CORRIDOR FLYOVER PROJECT TANGGULANGIN FLYOVER - CONTRACT PACKAGE 3 (PETERONGAN - TANGGULANGIN) EAST JAVA PROVINCE	NOT TO SCALE	BLOCK WEIGHT OF GIRDER	TST-07
	Sign	Sign	Sign	APPROVED BY: ir. HERRY VAZA M,Eng.Sc NIP. : 110038400		FULL SIZE A3		SHEET NO : 07 / 46
	Date	Date	Date	Sign / Date				

MEMBER	MAIN GIRDER G1										
JOINT NO.	BLOCK-1	BLOCK-2	BLOCK-3	BLOCK-5	BLOCK-6	BLOCK-8	BLOCK-9	BLOCK-11	BLOCK-12	BLOCK-13	TOTAL
PER MEMBER	4,123.0	8,493.0	8,565.0	8,723.0	9,562.0	9,469.0	8,578.0	8,440.0	8,244.0	4,197.0	
SET	1	1	1	1	1	1	1	1	1	1	9
GRAND TOTAL	4,123.0	8,493.0	8,565.0	8,723.0	9,562.0	9,469.0	8,578.0	8,440.0	8,244.0	4,197.0	78,394.0

MEMBER	JOINT G1												
JOINT NO.	J1	J2	J3	J4	J5	J6	J7	J8	J9	J10	J11	J12	TOTAL
PER MEMBER	2,047.0	1,065.0	997.0	860.0	807.0	440.5	440.5	807.0	853.0	983.0	1,057.0	2,016.0	
SET	1	1	1	1	1	1	1	1	1	1	1	1	10
GRAND TOTAL	2,047.0	1,065.0	997.0	860.0	807.0	440.5	440.5	807.0	853.0	983.0	1,057.0	2,016.0	12,373.0

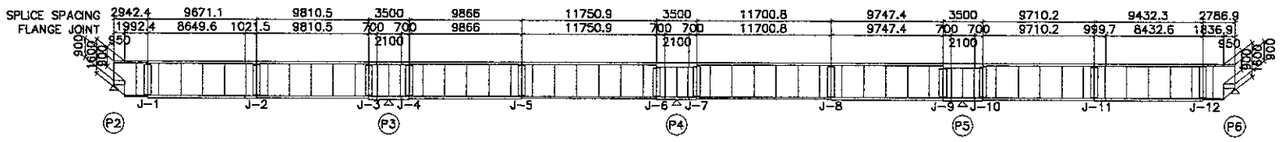

ARRANGEMENT DIAGRAM OF GIRDER G1

NOT TO SCALE

MEMBER	MAIN GIRDER G1										
JOINT NO.	BLOCK-1	BLOCK-2	BLOCK-3	BLOCK-5	BLOCK-6	BLOCK-8	BLOCK-9	BLOCK-11	BLOCK-12	BLOCK-13	TOTAL
PER MEMBER	2,292.0	8,265.0	8,377.0	8,600.0	9,498.0	9,482.0	9,402.0	9,324.0	8,555.0	2,513.0	
SET	1	1	1	1	1	1	1	1	1	1	9
GRAND TOTAL	2,292.0	8,265.0	8,377.0	8,600.0	9,498.0	9,482.0	9,402.0	9,324.0	8,555.0	2,513.0	76,308.0

MEMBER	JOINT G1												
JOINT NO.	J1	J2	J3	J4	J5	J6	J7	J8	J9	J10	J11	J12	TOTAL
PER MEMBER	2,050.5	1,064.5	997.0	861.0	808.0	440.5	440.0	816.5	987.5	1,202.0	1,165.0	2,010.5	
SET	1	1	1	1	1	1	1	1	1	1	1	1	10
GRAND TOTAL	2,050.5	1,064.5	997.0	861.0	808.0	440.5	440.0	816.5	987.5	1,202.0	1,165.0	2,010.5	12,843.0

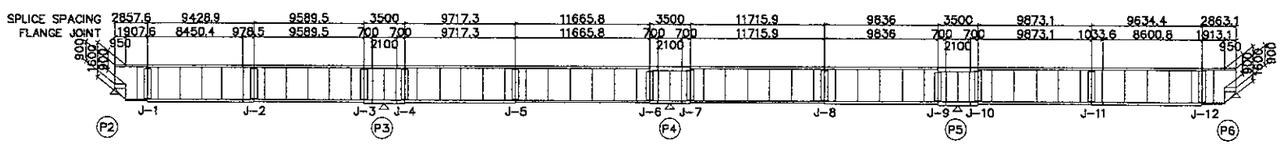

ARRANGEMENT DIAGRAM OF GIRDER G2

NOT TO SCALE

MEMBER	CROSS BEAM												
JOINT NO.	FI-1	FI-2	FI-3	FI-4	FI-5	FI-6	FI-7	FI-8	FI-9	FI-10	FI-11	FI-12	TOTAL
PER MEMBER	1,610	1,609	1,607	1,604	1,603	1,602	1,602	1,603	1,604	1,606	1,607	1,609	
SET	1	1	1	5	3	1	1	1	1	1	1	1	18
GRAND TOTAL	1,610	1,609	1,607	1,604	1,603	1,602	1,602	1,603	1,604	1,606	1,607	1,609	19,266

MEMBER	GIRDER P3	
PIER	P3	TOTAL
PER MEMBER	24,675.20	
SET	1	1
GRAND TOTAL	24,675.20	24,675.20

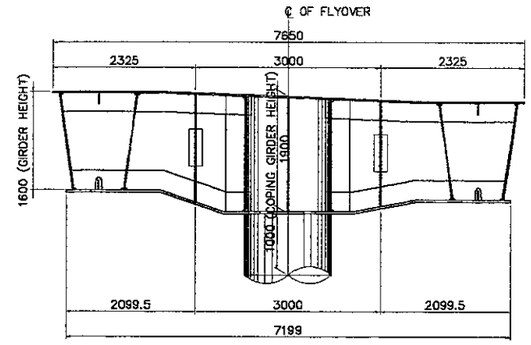

T-TYPE OF GIRDER P3

NOT TO SCALE

MEMBER	PORTAL TYPE P4			
JOINT NO.	BLOCK-1	BLOCK-2	BLOCK-3	TOTAL
PER MEMBER	17,761.20	33,225.90	26,009.50	
SET	1	1	1	3
GRAND TOTAL	17,761.20	33,225.90	26,009.50	76,996.60

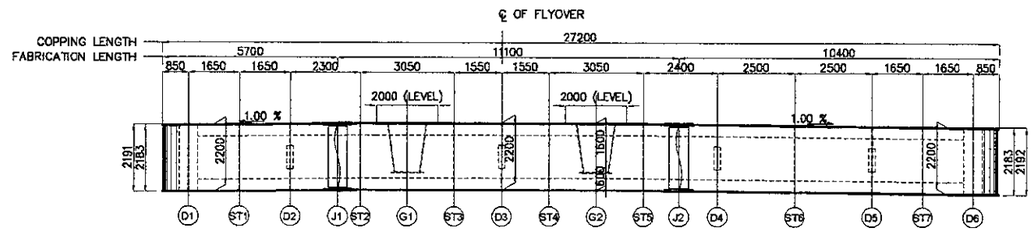

PORTAL-TYPE OF GIRDER P4

NOT TO SCALE

MEMBER	PORTAL TYPE P5			
JOINT NO.	BLOCK-1	BLOCK-2	BLOCK-3	TOTAL
PER MEMBER	22,545.10	20,755.70	36,218.40	
SET	1	1	1	3
GRAND TOTAL	22,545.10	20,755.70	36,218.40	79,519.20

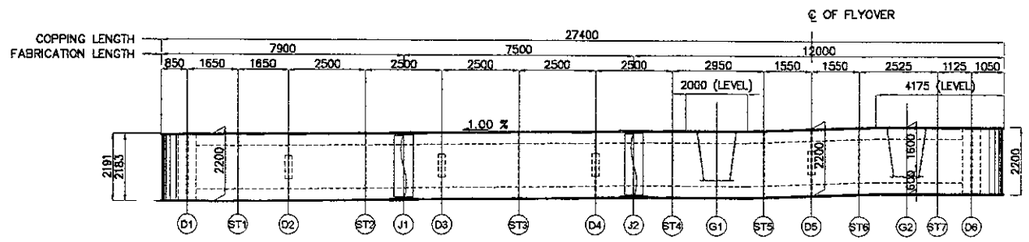

PORTAL-TYPE OF GIRDER P5

NOT TO SCALE

JAPAN INTERNATIONAL COOPERATION AGENCY / KATAHIRA & ENGINEERS INTERNATIONAL	DESIGNED BY	CHECKED BY	SUBMITTED BY	REPUBLIC OF INDONESIA MINISTRY OF PUBLIC WORKS DIRECTORATE GENERAL OF HIGHWAYS	PROJECT AND LOCATION :	SCALE :	DRAWING TITLE :	DRAWING NO :
	Name S. MATSUI	Name T. OKUMURA	Name M. KIUCHI	APPROVED BY Ir. HERRY VAZA M,Eng.Sc NIP. : 110038400	DETAILED DESIGN STUDY OF NORTH JAVA CORRIDOR FLYOVER PROJECT TANGGULANGIN FLYOVER - CONTRACT PACKAGE 3 (PETERONGAN - TANGGULANGIN) EAST JAVA PROVINCE	NOT TO SCALE FULL SIZE A3	SECTIONAL DIMENSION OF GIRDER G1	TST-08 SHEET NO : 08 / 46
	Sign	Sign	Sign	Sign				
	Date	Date	Date	Date				

G-1

REQUIRED ———

CAPACITY - - - - - -

kN'm="" kN="" kN'm="" 20000="" 15000="" 10000="" 5000="" 0="" 4000="" 3000="" 2000="" 1000="" 0="" 5884.9="" 5768.6="" 5760.6="" 5760="" 5798.2="" 5781.4="" 5772.4="" 5764.9="" 5752.6="" 5742.5="" 5733.6="" 5719.4="" 5707.1="" 5703.7="" 5694.8="" 5573.8="" 24174.1="" 25116.9="" 24948.2="" 23679.4="" 2942.4="" 9671.1="" 9810.5="" 3500="" 9866="" 11750.9="" 11700.8="" 9747.4="" 9710.2="" 9432.3="" 2786.9="" 1992.4="" 8649.6="" 10215="" 9810.5="" 9866="" 11750.9="" 11700.8="" 9747.4="" 9710.2="" 8432.6="" 1836.9="" 2100="" J-1="" J-2="" J-3="" J-4="" J-5="" J-6="" J-7="" J-8="" J-9="" J-10="" J-11="" J-12="" 900="" 1600="" 1000="" 900="" 1000="" 1600="" 900="" 950="" 950="" 900="" 1000="" 1600="" 1000

JAPAN INTERNATIONAL COOPERATION AGENCY / KATAHIRA & ENGINEERS INTERNATIONAL	DESIGNED BY	CHECKED BY	SUBMITTED BY	REPUBLIC OF INDONESIA MINISTRY OF PUBLIC WORKS DIRECTORATE GENERAL OF HIGHWAYS	PROJECT AND LOCATION :	SCALE :	DRAWING TITLE :	DRAWING NO :
	Name: S. MATSUI	Name: T. OKUMURA	Name: M. KIUCHI		DETAILED DESIGN STUDY OF NORTH JAVA CORRIDOR FLYOVER PROJECT TANGGULANGIN FLYOVER - CONTRACT PACKAGE 3 (PETERONGAN - TANGGULANGIN) EAST JAVA PROVINCE	NOT TO SCALE	SECTIONAL DIMENSION OF GIRDER G2	TST-09
	Sign	Sign	Sign	APPROVED BY: Ir. HERRY VAZA M,Eng.Sc NIP. : 110038400				SHEET NO :
	Date	Date	Date	Sign / Date		FULL SIZE A3		09 / 46

G-2

REQUIRED ———

CAPACITY - - - - -

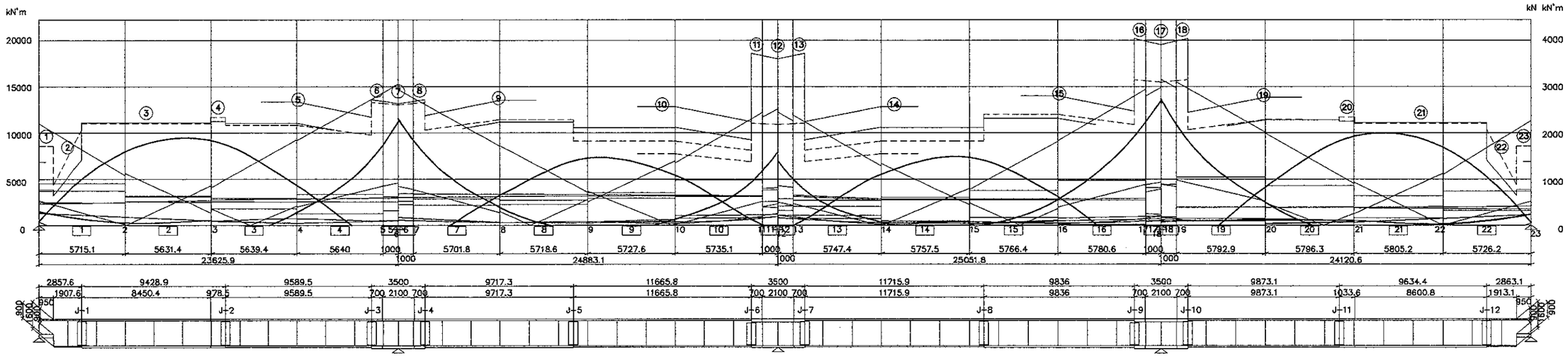

		1		2	3	4	5	6	7		8	9	10			
SECTION ID		Sec-1		Sec-1	Sec-2	Sec-2	Sec-3	Sec-4	Sec-4		Sec-4	Sec-5	Sec-6			
U-FLG, W=1500 MM		15		15	21	21	21	24	24		24	21	21			
U-FLG QUALITY		SMA 490AW			SMA 490BW											
U-FLG LOG. RIB	NOS	1		1	1	1	1	1	0		1	1	1			
	WIDTH	190		190	190	190	190	190	0		190	190	190			
	THICKNESS	22		22	22	22	22	22	0		22	22	22			
	QUALITY	SM 490YB														
LWEB-PL	WIDTH	912.4	912.4	912.4	1600.7	1594.6	1594.6	1594.6	1594.6	1591.6	1591.6	1591.6	1591.6	1594.6	1594.6	1594.6
	THICKNESS	30		30	15	15	15	15	15		15	15	15			
	QUALITY	SMA 490BW			SMA 490AW											
RWEB-PL	WIDTH	912.4	912.4	912.4	1600.7	1594.6	1594.6	1594.6	1594.6	1591.6	1591.6	1591.6	1591.6	1594.6	1594.6	1594.6
	THICKNESS	30		30	15	15	15	15	15		15	15	15			
	QUALITY	SMA 490BW			SMA 490AW											
L-FLG LOG. RIB	NOS	0		0	0	1	1	1	1		1	1	1			
	WIDTH	0		0	0	160	160	160	160		160	160	160			
	THICKNESS	0		0	0	19	19	19	19		19	19	19			
	QUALITY	SM 490YB														
L-FLG, W=1049 MM		40		12	23	23	20	32	32		32	22	14			
L-FLG QUALITY		SMA 490BW		SMA490AW	SMA 490BW								SMA490AW			
U-FLG STRESS	σ	-48	55	-91	-92	-153	-151	-147	141	147	192	197	153	147	-113	-119
	σa	185	210	138	124	175	176	176	210	210	210	210	210	210	176	176
	σa-σ	137	155	47	32	22	25	29	69	63	18	13	57	63	62	56
L-FLG STRESS	σ	46	-47	81	115	195	182	187	-171	-153	-197	-205	-162	-175	143	177
	σa	210	210	210	210	210	210	210	210	210	210	210	210	210	210	210
	σa-σ	164	163	129	95	15	28	23	39	57	13	5	48	35	67	33
WEB SHEAR STRESS	τ	61	29	57	29	25	19	17	69	71	76	31	30	29	30	30
	τa	120	120	120	120	120	120	120	120	120	120	120	120	120	120	120
	COMBINED	0.28	0.09	0.29	0.31	0.84	0.72	0.76	0.78	0.69	1.06	0.92	0.59	0.69	0.47	0.71
SECTION GOVERN		LEFT	LEFT	RIGHT	J-1	MAX.	LEFT	J-2	J-3	RIGHT	MAX. L	MAX. R	LEFT	J-4	RIGHT	J-5
NET U-FLG STRESS, σ									155					162		
NET L-FLG STRESS, σ					142			199								197

		10			11			12			13			14			15		
SECTION ID		Sec-6			Sec-7			Sec-7			Sec-7			Sec-8			Sec-9		
U-FLG, W=1500 MM		21			40			40			40			21			21		
U-FLG QUALITY					SMA 570W									SMA 490BW					
U-FLG LOG. RIB	NOS	1			1			0			1			1			1		
	WIDTH	190			190			0			190			190			190		
	THICKNESS	22			22			0			22			22			22		
	QUALITY	SM 570												SM 490YB					
LWEB-PL	WIDTH	1594.6	1594.6	1594.6	1575.4	1575.4	1575.4	1575.4	1575.4	1575.4	1575.4	1575.4	1575.4	1594.6	1594.6	1594.6	1594.6	1594.6	
	THICKNESS	15			15			15			15			15			18		
	QUALITY	SMA 490AW			SMA 570W									SMA 490AW					
RWEB-PL	WIDTH	1594.6	1594.6	1594.6	1575.4	1575.4	1575.4	1575.4	1575.4	1575.4	1575.4	1575.4	1575.4	1594.6	1594.6	1594.6	1594.6	1594.6	
	THICKNESS	15			15			15			15			15			18		
	QUALITY	SMA 490AW			SMA 570W									SMA 490AW					
L-FLG LOG. RIB	NOS	1			1			1			1			1			1		
	WIDTH	160			160			160			160			160			160		
	THICKNESS	19			19			19			19			19			19		
	QUALITY	SM 490YB						SM 570						SM 490YB					
L-FLG, W=1049 MM		14			22			22			22			14			22		
L-FLG QUALITY		SMA490AW			SMA 570W									SMA490AW					
U-FLG STRESS	σ	-126	-31	112	-22	72	91	126	109	79	-21	62	-30	96	-127	-120	-110	180	
	σa	176	210	210	210	210	210	210	210	210	210	210	210	210	175	176	175	210	
	σa-σ	49	179	98	188	138	119	84	101	131	189	148	180	114	48	55	65	30	
L-FLG STRESS	σ	186	41	-144	31	-110	-136	-187	-164	-118	29	-93	39	-121	186	176	135	-205	
	σa	210	210	182	210	210	210	210	210	210	210	210	210	182	210	210	210	210	
	σa-σ	24	169	37	179	100	74	23	46	92	181	117	171	61	24	34	75	5	
WEB SHEAR STRESS	τ	27	24	75	24	74	77	75	24	23	61	21	62	21	16	12	10	72	
	τa	120	120	120	120	120	120	120	120	120	120	120	120	120	120	120	120	120	
	COMBINED	0.78	0.06	0.67	0.05	0.48	0.63	0.94	0.59	0.31	0.27	0.20	0.28	0.35	0.76	0.68	0.39	1.09	
SECTION GOVERN		MAX.	J-6	J-6	LEFT	LEFT	RIGHT	MAX. L	MAX. R	LEFT	RIGHT	RIGHT	J-7	J-7	MAX.	J-8	LEFT	J-9	
NET U-FLG STRESS, σ				138										118				198	
NET L-FLG STRESS, σ			48										46			197			

		16	17		18	19			20		21	22	23		
SECTION ID		Sec-10	Sec-10		Sec-10	Sec-11			Sec-12		Sec-12	Sec-13	Sec-13		
U-FLG, W=1500 MM		40	40		40	21			21		21	15	15		
U-FLG QUALITY		SMA 570W				SMA 490BW						SMA 490AW			
U-FLG LOG. RIB	NOS	1	0		1	1			1		1	1	1		
	WIDTH	190	0		190	190			190		190	190	190		
	THICKNESS	22	0		22	22			22		22	22	22		
	QUALITY	SM 570				SM 490YB									
LWEB-PL	WIDTH	1575.4	1575.4	1575.4	1575.4	1594.6	1594.6	1594.6	1594.6		1594.6	1600.7	912.4	912.4	912.4
	THICKNESS	18	18		18	18			15		15	30	30		
	QUALITY	SMA 570W				SMA 490AW						SMA 490BW			
RWEB-PL	WIDTH	1575.4	1575.4	1575.4	1575.4	1594.6	1594.6	1594.6	1594.6		1594.6	1600.7	912.4	912.4	912.4
	THICKNESS	18	18		18	18			15		15	30	30		
	QUALITY	SMA 570W				SMA 490AW						SMA 490BW			
L-FLG LOG. RIB	NOS	1	1		1	1			1		0	0	0		
	WIDTH	160	160		160	160			160		0	0	0		
	THICKNESS	19	19		19	19			19		0	0	0		
	QUALITY	SM 570				SM 490YB						SM 490YB			
L-FLG, W=1049 MM		36	36		36	20			23		23	12	40		
L-FLG QUALITY		SMA 570W				SMA 490BW					SMA490AW	SMA 490BW			
U-FLG STRESS	σ	133	166	163	128	173	-149	-161		-163		-95	-88	-39	40
	σa	210	210	210	210	210	176	176		175		122	134	187	210
	σa-σ	77	44	47	82	37	27	15		12		27	47	148	170
L-FLG STRESS	σ	-166	-208	-206	-159	-202	182	188		202		117	76	38	-35
	σa	210	210	210	210	210	210	210		210		210	210	210	210
	σa-σ	44	2	4	51	8	28	22		8		93	134	172	175
WEB SHEAR STRESS	τ	72	70	20	20	20	36	35		28		11	24	25	54
	τa	120	120	120	120	120	120	120		120		120	120	120	120
	COMBINED	0.80	1.11	0.89	0.53	0.88	0.76	0.80		0.91		0.30	0.19	0.07	0.22
SECTION GOVERN		RIGHT	MAX. L	MAX. R	LEFT	J-10	J-11	RIGHT		MAX.		J-12	LEFT	RIGHT	RIGHT
NET U-FLG STRESS, σ						191									
NET L-FLG STRESS, σ							193					144			

W = WIDTH
H = HEIGHT
TH = THICKNESS
STRESS IN N/mm2

MAX. = MAXIMUM
MAX.R = MAXIMUM RIGHT
MAX.L = MAXIMUM LEFT

Tanggulangin G-2

JICA JAPAN INTERNATIONAL COOPERATION AGENCY / KEI KATAHIRA & ENGINEERS INTERNATIONAL	DESIGNED BY	CHECKED BY	SUBMITTED BY	REPUBLIC OF INDONESIA MINISTRY OF PUBLIC WORKS DIRECTORATE GENERAL OF HIGHWAYS	PROJECT AND LOCATION :	SCALE :	DRAWING TITLE :	DRAWING NO :
	Name: S. MATSUI	Name: T. OKUMURA	Name: M. KIUCHI		DETAILED DESIGN STUDY OF NORTH JAVA CORRIDOR FLYOVER PROJECT TANGGULANGIN FLYOVER - CONTRACT PACKAGE 3 (PETERONGAN - TANGGULANGIN) EAST JAVA PROVINCE	1 : 50	SECTIONAL DIMENSION OF GIRDER P3	TST-10
	Sign	Sign	Sign	APPROVED BY: Ir. HERRY VAZA M,Eng,Sc NIP. : 110038400				SHEET NO :
	Date	Date	Date	Sign / Date		FULL SIZE A3		10 / 46

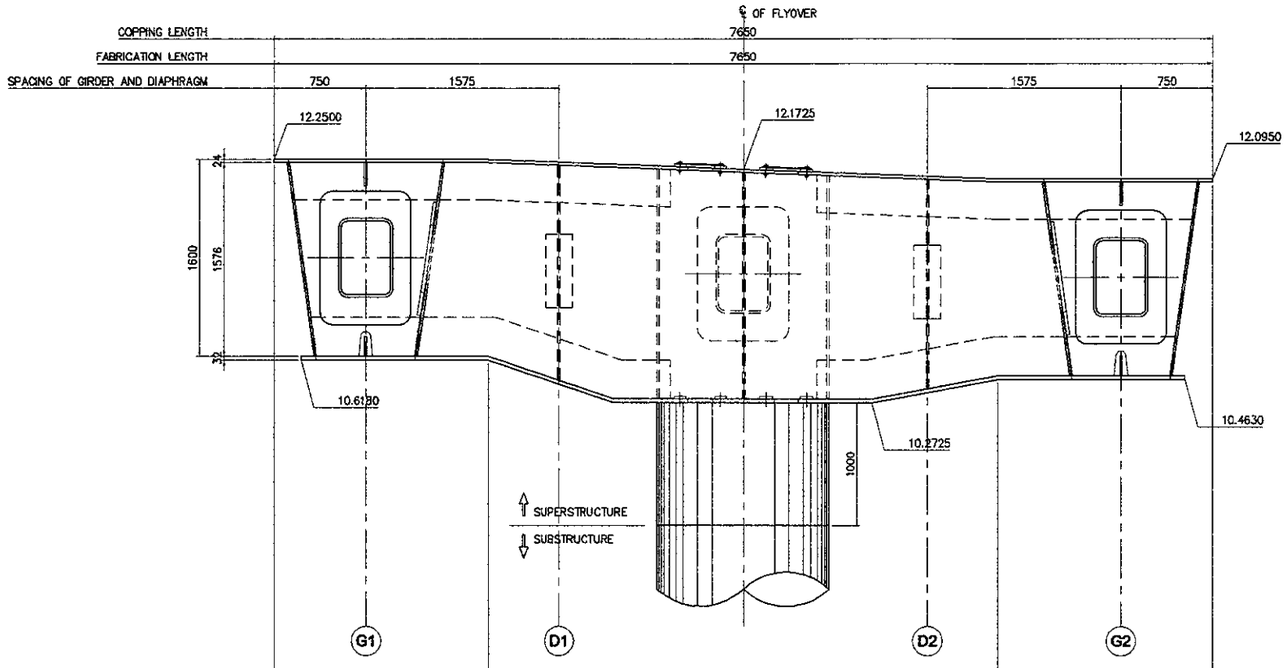

	G1	D1	D2	G2
UFLG WIDTH	1750	2100		1750
UFLG THICKNESS	24	24		24
UFLG QUALITY	SMA 490BW	SMA 490BW		SMA 490BW
URIB THICKNESS	2x300x30		2x300x30	
URIB QUALITY	SM 490YB		SM 490YB	
WEB THICKNESS	25			
WEB QUALITY	SMA 490BW			
LFLG WIDTH	1299	2100		1299
LFLG THICKNESS	32	32		32
LFLG QUALITY	SMA 490BW	SMA 490BW		SM 490BW
LRIB THICKNESS	2x300x30		2x300x30	
LRIB QUALITY	SM 490YB		SM 490YB	

SECTIONAL DIMENSION OF GIRDER P3

SCALE : 1:50

JICA JAPAN INTERNATIONAL COOPERATION AGENCY / KEI KATAHIRA & ENGINEERS INTERNATIONAL	DESIGNED BY	CHECKED BY	SUBMITTED BY	REPUBLIC OF INDONESIA MINISTRY OF PUBLIC WORKS DIRECTORATE GENERAL OF HIGHWAYS	PROJECT AND LOCATION :	SCALE :	DRAWING TITLE :	DRAWING NO :
	Name: S. MATSUI	Name: T. OKUMURA	Name: M. KIUCHI		DETAILED DESIGN STUDY OF NORTH JAVA CORRIDOR FLYOVER PROJECT TANGGULANGIN FLYOVER - CONTRACT PACKAGE 3 (PETERONGAN - TANGGULANGIN) EAST JAVA PROVINCE	1 : 100	SECTIONAL DIMENSION OF GIRDER P4	TST-11
	Sign	Sign	Sign	APPROVED BY: Ir. HERRY VAZA M,Eng.Sc NIP. : 110038400				SHEET NO : 11 / 46
	Date	Date	Date	Sign / Date		FULL SIZE A3		

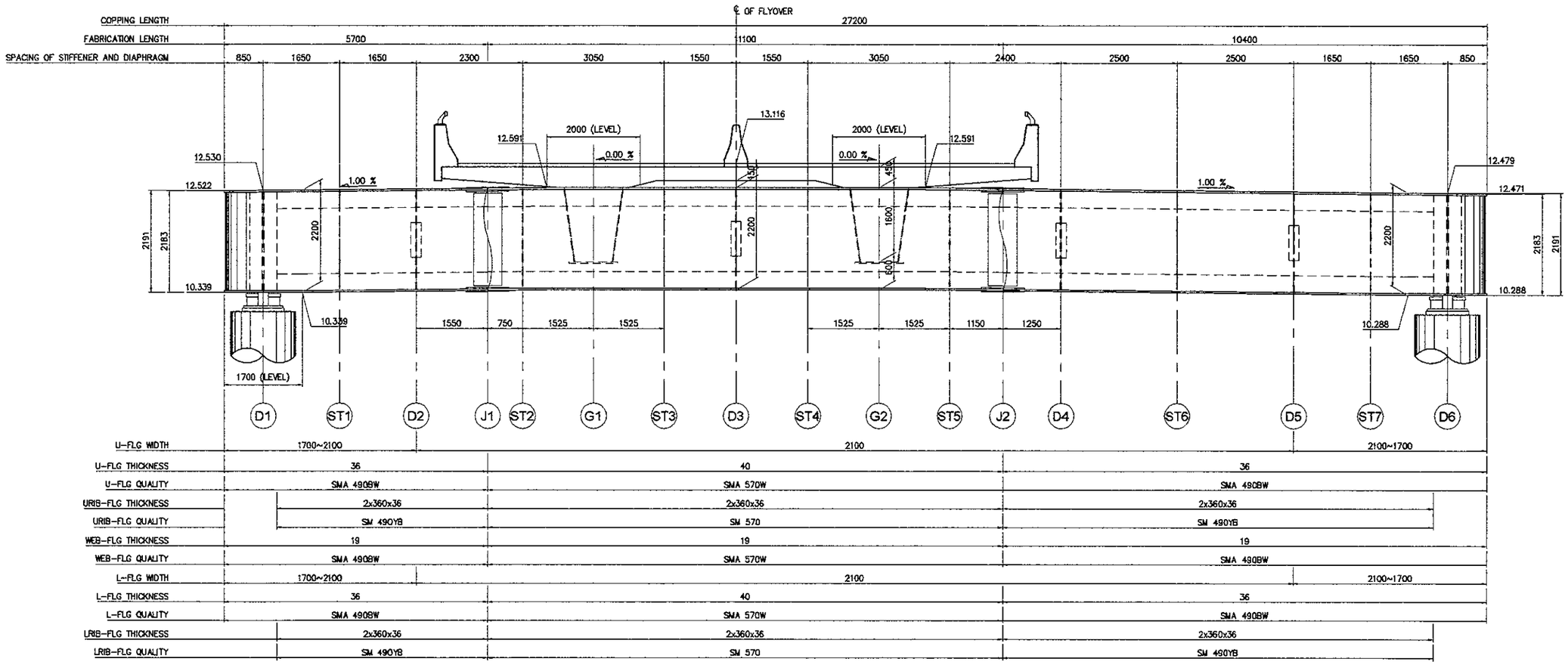

SECTIONAL DIMENSION OF GIRDER P4

SCALE : 1:100

JICA JAPAN INTERNATIONAL COOPERATION AGENCY / KEI KATAHIRA & ENGINEERS INTERNATIONAL	DESIGNED BY	CHECKED BY	SUBMITTED BY	REPUBLIC OF INDONESIA MINISTRY OF PUBLIC WORKS DIRECTORATE GENERAL OF HIGHWAYS	PROJECT AND LOCATION :	SCALE :	DRAWING TITLE :	DRAWING NO :
	Name: S. MATSUI	Name: T. OKUMURA	Name: M. KIUCHI		DETAILED DESIGN STUDY OF NORTH JAVA CORRIDOR FLYOVER PROJECT TANGGULANGIN FLYOVER - CONTRACT PACKAGE 3 (PETERONGAN - TANGGULANGIN) EAST JAVA PROVINCE	1 : 100	SECTIONAL DIMENSION OF GIRDER P5	TST-12
	Sign	Sign	Sign	APPROVED BY: Ir. HERRY VAZA M,Eng.Sc NIP. : 110038400				SHEET NO :
	Date	Date	Date	Sign / Date		FULL SIZE A3		12 / 46

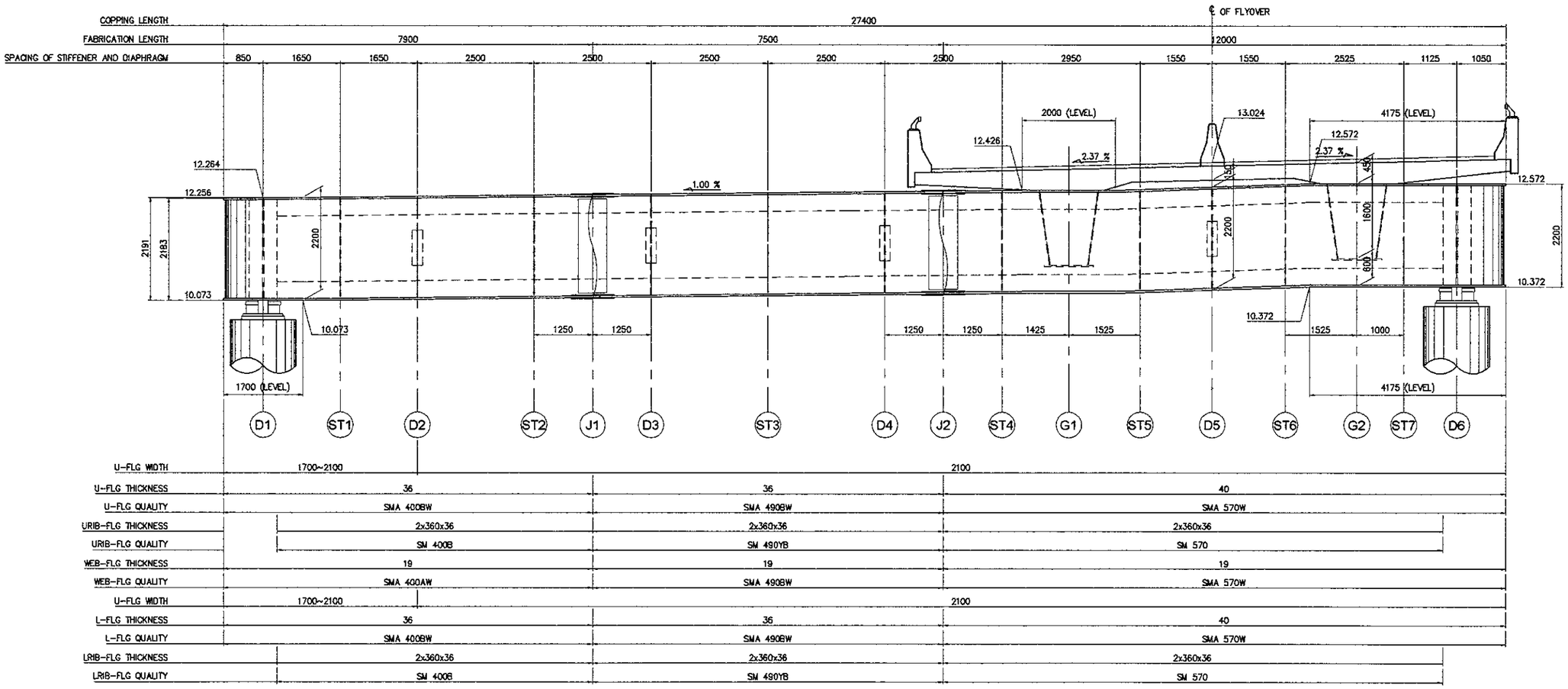

SECTIONAL DIMENSION OF GIRDER P5

SCALE : 1:100

JAPAN INTERNATIONAL COOPERATION AGENCY / KATAHIRA & ENGINEERS INTERNATIONAL	DESIGNED BY	CHECKED BY	SUBMITTED BY	REPUBLIC OF INDONESIA MINISTRY OF PUBLIC WORKS DIRECTORATE GENERAL OF HIGHWAYS	PROJECT AND LOCATION :	SCALE :	DRAWING TITLE :	DRAWING NO :
	Name: S. MATSUI	Name: T. OKUMURA	Name: M. KIUCHI	APPROVED BY: Ir. HERRY VAZA M.Eng.Sc, NIP. : 110038400	DETAILED DESIGN STUDY OF NORTH JAVA CORRIDOR FLYOVER PROJECT TANGGULANGIN FLYOVER - CONTRACT PACKAGE 3 (PETERONGAN - TANGGULANGIN) EAST JAVA PROVINCE	1 : 60	DETAIL OF GIRDER G1 (1 OF 7)	TST-13
	Sign	Sign	Sign	Sign		FULL SIZE A3		SHEET NO : 13 / 46
	Date	Date	Date	Date				

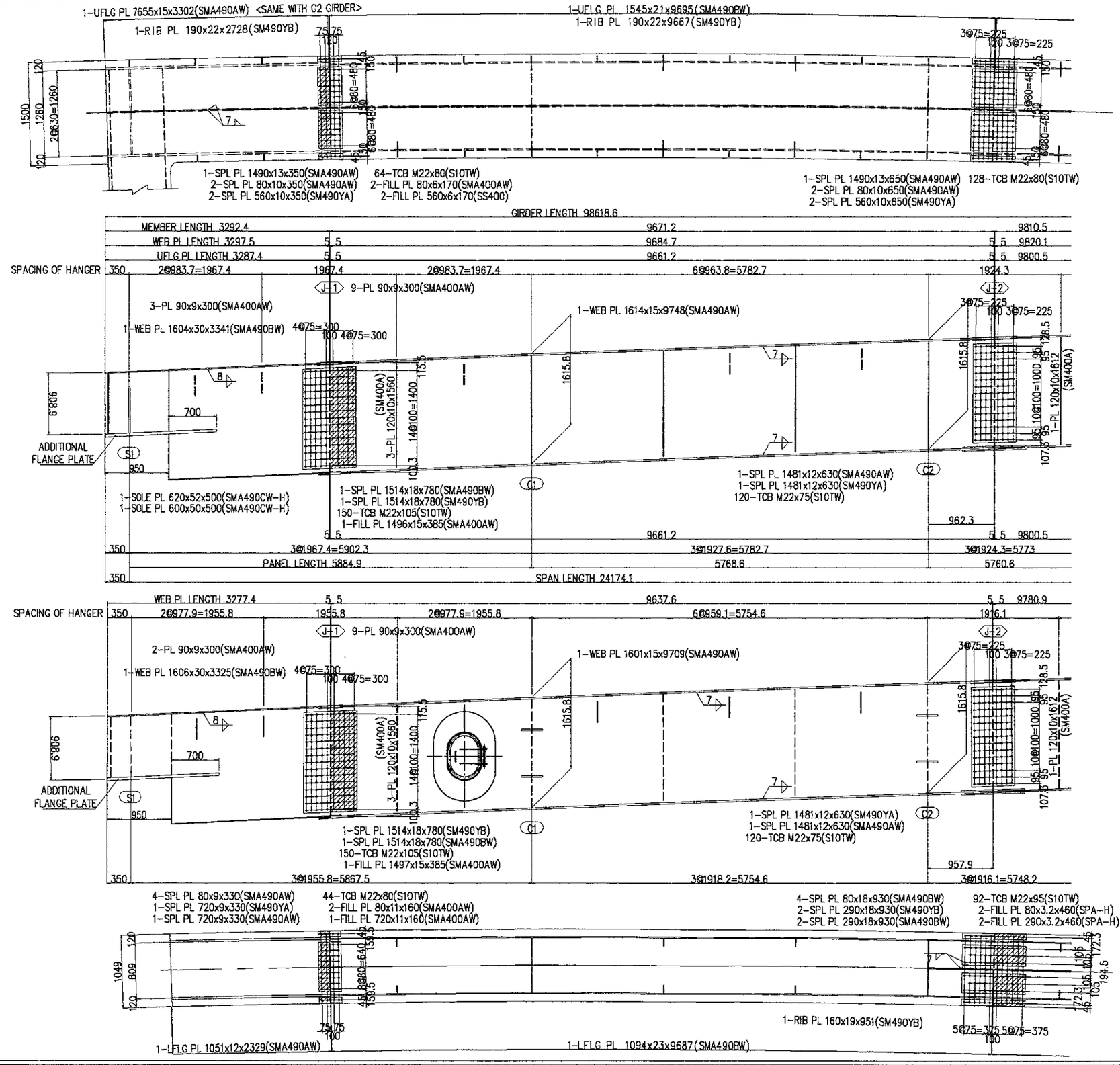

NOTES :

1. MARK "+" SHALL BE HIGH TENSION TORSION TYPE BOLT
2. ALL SCARE LOOPS SHALL BE 35 RADIUS UNLESS OTHERWISE NOTED
3. SPLICE HOLES IN FLANGE RIB PLATES SHALL BE D=26.50

JICA JAPAN INTERNATIONAL COOPERATION AGENCY	DESIGNED BY	CHECKED BY	SUBMITTED BY	REPUBLIC OF INDONESIA MINISTRY OF PUBLIC WORKS DIRECTORATE GENERAL OF HIGHWAYS	PROJECT AND LOCATION :	SCALE :	DRAWING TITLE :	DRAWING NO :
KEI KATAHIRA & ENGINEERS INTERNATIONAL	Name S. MATSUI	Name T. OKUMURA	Name M. KIUCHI	APPROVED BY Ir. HERRY VAZA M,Eng.Sc NIP. : 110038400	DETAILED DESIGN STUDY OF NORTH JAVA CORRIDOR FLYOVER PROJECT TANGGULANGIN FLYOVER - CONTRACT PACKAGE 3 (PETERONGAN - TANGGULANGIN) EAST JAVA PROVINCE	1 : 60	DETAIL OF GIRDER G1 (2 OF 7)	TST-14
	Sign	Sign	Sign	Sign				SHEET NO :
	Date	Date	Date	Date		FULL SIZE A3		14 / 46

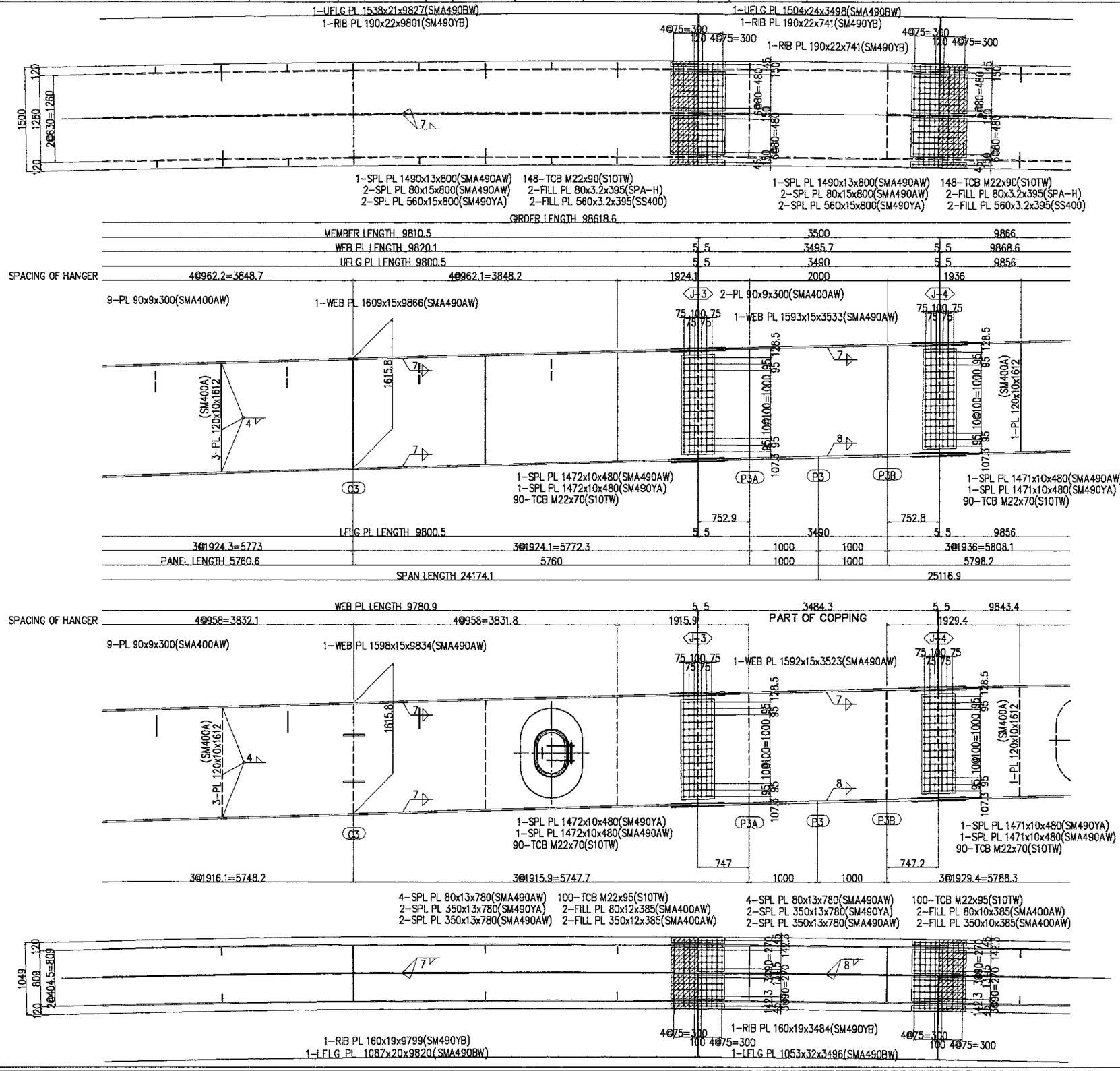

NOTES :

1. MARK "+" SHALL BE HIGH TENSION TORSION TYPE BOLT
2. ALL SCARE LOOPS SHALL BE 35 RADIUS UNLESS OTHERWISE NOTED
3. SPLICE HOLES IN FLANGE RIB PLATES SHALL BE D=26.50

JAPAN INTERNATIONAL COOPERATION AGENCY / KATAHIRA & ENGINEERS INTERNATIONAL	DESIGNED BY	CHECKED BY	SUBMITTED BY	REPUBLIC OF INDONESIA MINISTRY OF PUBLIC WORKS DIRECTORATE GENERAL OF HIGHWAYS	PROJECT AND LOCATION :	SCALE :	DRAWING TITLE :	DRAWING NO :
	Name S. MATSUI	Name T. OKUMURA	Name M. KIUCHI		DETAILED DESIGN STUDY OF NORTH JAVA CORRIDOR FLYOVER PROJECT TANGGULANGIN FLYOVER - CONTRACT PACKAGE 3 (PETERONGAN - TANGGULANGIN) EAST JAVA PROVINCE	1 : 60	DETAIL OF GIRDER G1 (3 OF 7)	TST-15
	Sign	Sign	Sign	APPROVED BY Ir. HERRY VAZA M,Eng.Sc NIP. : 110038400 Sign				SHEET NO :
	Date	Date	Date	Date		FULL SIZE A3		15 / 46

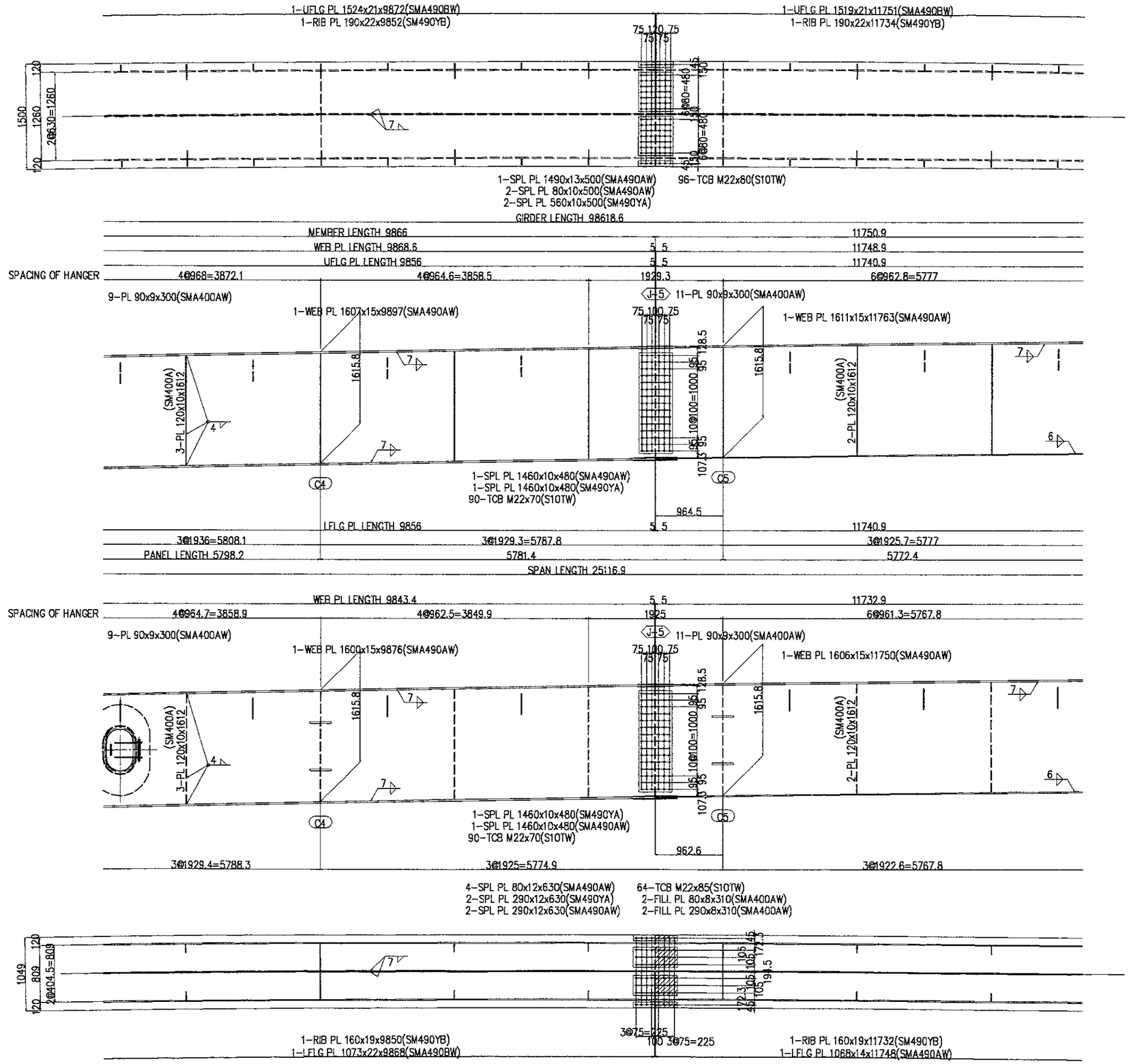

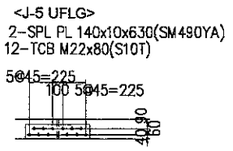

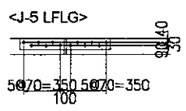

KEY PLAN

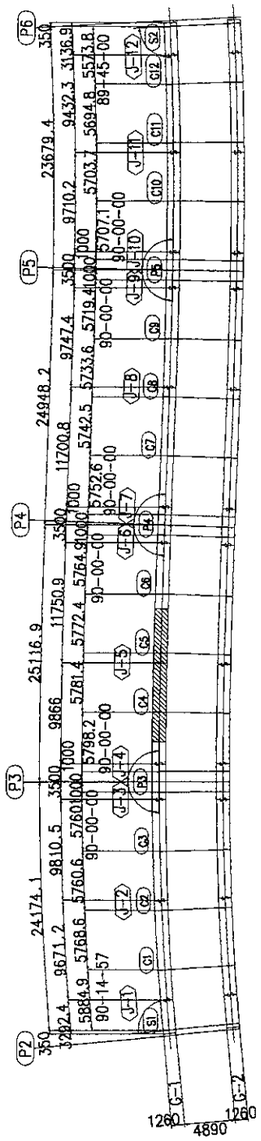

NOTES :

1. MARK "+" SHALL BE HIGH TENSION TORSION TYPE BOLT
2. ALL SCARE LOOPS SHALL BE 35 RADIUS UNLESS OTHERWISE NOTED
3. SPLICE HOLES IN FLANGE RIB PLATES SHALL BE D=26.50

JAPAN INTERNATIONAL COOPERATION AGENCY / KATAHIRA & ENGINEERS INTERNATIONAL	DESIGNED BY	CHECKED BY	SUBMITTED BY	REPUBLIC OF INDONESIA MINISTRY OF PUBLIC WORKS DIRECTORATE GENERAL OF HIGHWAYS	PROJECT AND LOCATION :	SCALE :	DRAWING TITLE :	DRAWING NO :
	Name S. MATSUI	Name T. OKUMURA	Name M. KIUCHI		DETAILED DESIGN STUDY OF NORTH JAVA CORRIDOR FLYOVER PROJECT TANGGULANGIN FLYOVER - CONTRACT PACKAGE 3 (PETERONGAN - TANGGULANGIN) EAST JAVA PROVINCE	1 : 60	DETAIL OF GIRDER G1 (4 OF 7)	TST-16
	Sign	Sign	Sign	APPROVED BY Ir. HERRY VAZA M,Eng.Sc NIP. : 110038400 Sign				SHEET NO :
	Date	Date	Date	Date		FULL SIZE A3		16 / 46

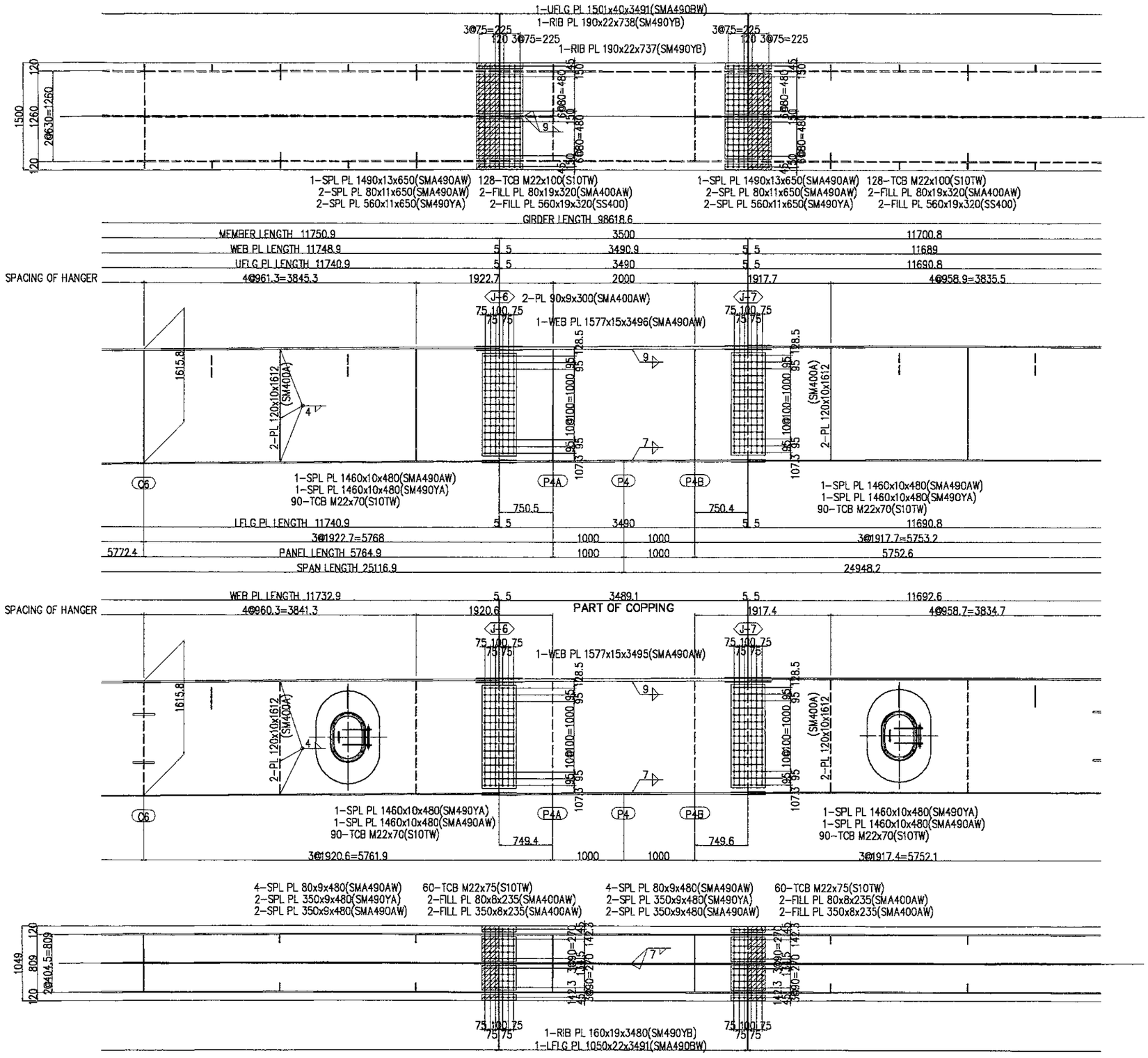

NOTES :

1. MARK "+" SHALL BE HIGH TENSION TORSION TYPE BOLT
2. ALL SCARE LOOPS SHALL BE 35 RADIUS UNLESS OTHERWISE NOTED
3. SPLICE HOLES IN FLANGE RIB PLATES SHALL BE D=26.50

JAPAN INTERNATIONAL COOPERATION AGENCY / KATAHIRA & ENGINEERS INTERNATIONAL	DESIGNED BY	CHECKED BY	SUBMITTED BY	REPUBLIC OF INDONESIA MINISTRY OF PUBLIC WORKS DIRECTORATE GENERAL OF HIGHWAYS	PROJECT AND LOCATION :	SCALE :	DRAWING TITLE :	DRAWING NO :
	Name S. MATSUI	Name T. OKUMURA	Name M. KIUCHI		DETAILED DESIGN STUDY OF NORTH JAVA CORRIDOR FLYOVER PROJECT TANGGULANGIN FLYOVER - CONTRACT PACKAGE 3 (PETERONGAN - TANGGULANGIN) EAST JAVA PROVINCE	1 : 60	DETAIL OF GIRDER G1 (5 OF 7)	TST-17
	Sign	Sign	Sign	APPROVED BY Ir. HERRY VAZA M,Eng.Sc NIP. : 110038400 Sign				SHEET NO :
	Date	Date	Date	Date		FULL SIZE A3		17 / 46

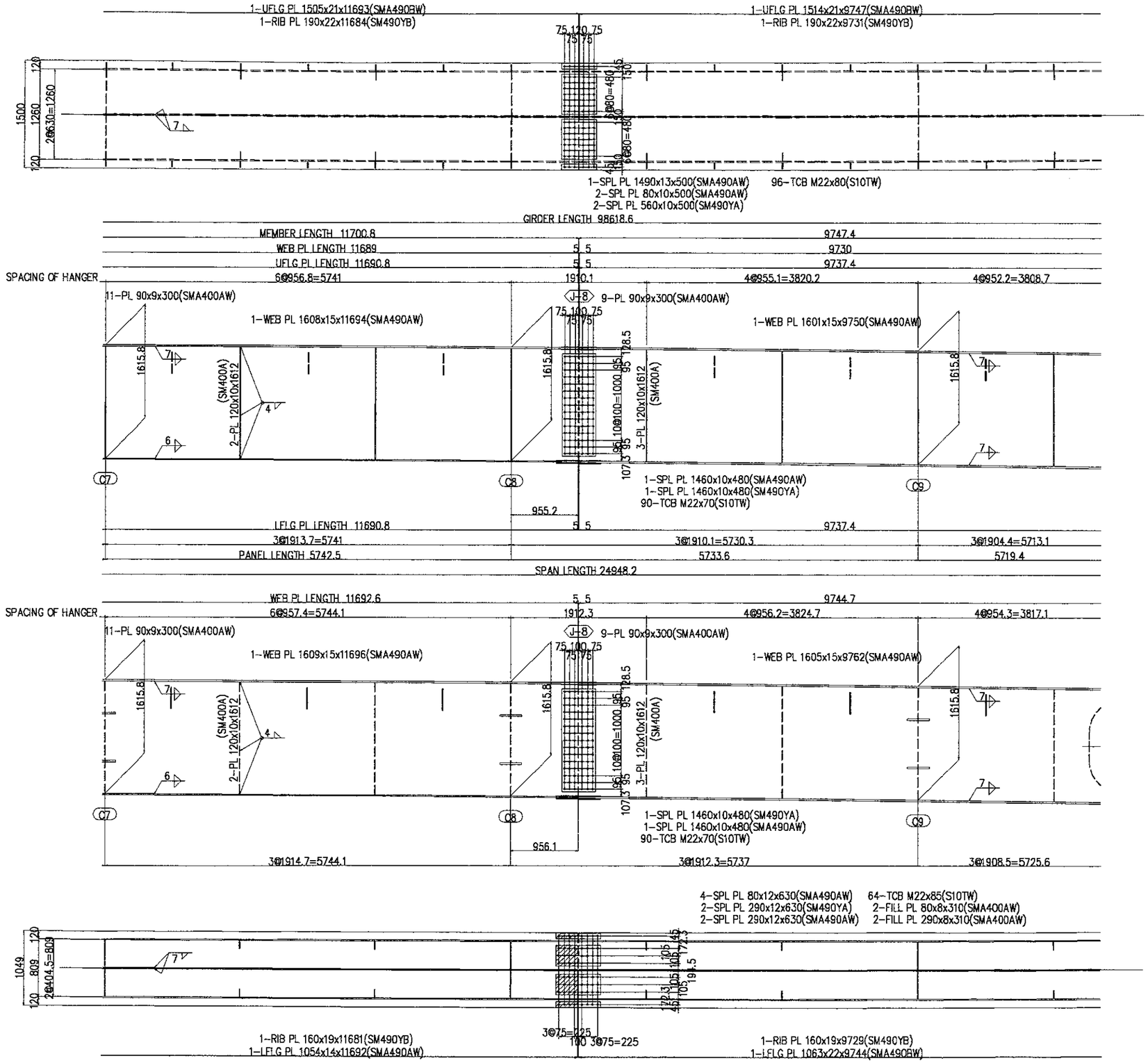

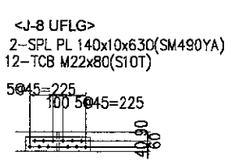

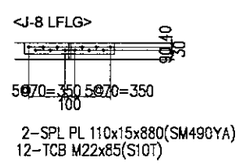

KEY PLAN

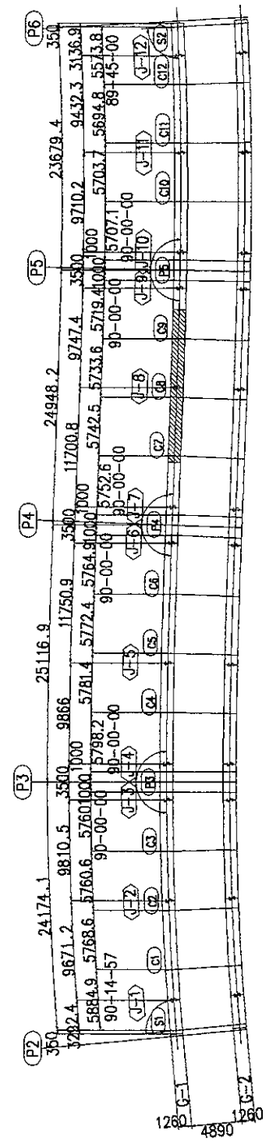

NOTES :

1. MARK "+" SHALL BE HIGH TENSION TORSION TYPE BOLT
2. ALL SCARE LOOPS SHALL BE 35 RADIUS UNLESS OTHERWISE NOTED
3. SPLICE HOLES IN FLANGE RIB PLATES SHALL BE D=26.50

JAPAN INTERNATIONAL COOPERATION AGENCY / KATAHIRA & ENGINEERS INTERNATIONAL	DESIGNED BY	CHECKED BY	SUBMITTED BY	REPUBLIC OF INDONESIA MINISTRY OF PUBLIC WORKS DIRECTORATE GENERAL OF HIGHWAYS	PROJECT AND LOCATION :	SCALE :	DRAWING TITLE :	DRAWING NO :
	Name: S. MATSUI	Name: T. OKUMURA	Name: M. KIUCHI		DETAILED DESIGN STUDY OF NORTH JAVA CORRIDOR FLYOVER PROJECT TANGGULANGIN FLYOVER - CONTRACT PACKAGE 3 (PETERONGAN - TANGGULANGIN) EAST JAVA PROVINCE	1 : 60	DETAIL OF GIRDER G1 (6 OF 7)	TST-18
	Sign	Sign	Sign	APPROVED BY: Ir. HERRY VAZA M.Eng.Sc NIP. : 110038400		FULL SIZE A3		SHEET NO : 18 / 46
	Date	Date	Date	Sign / Date				

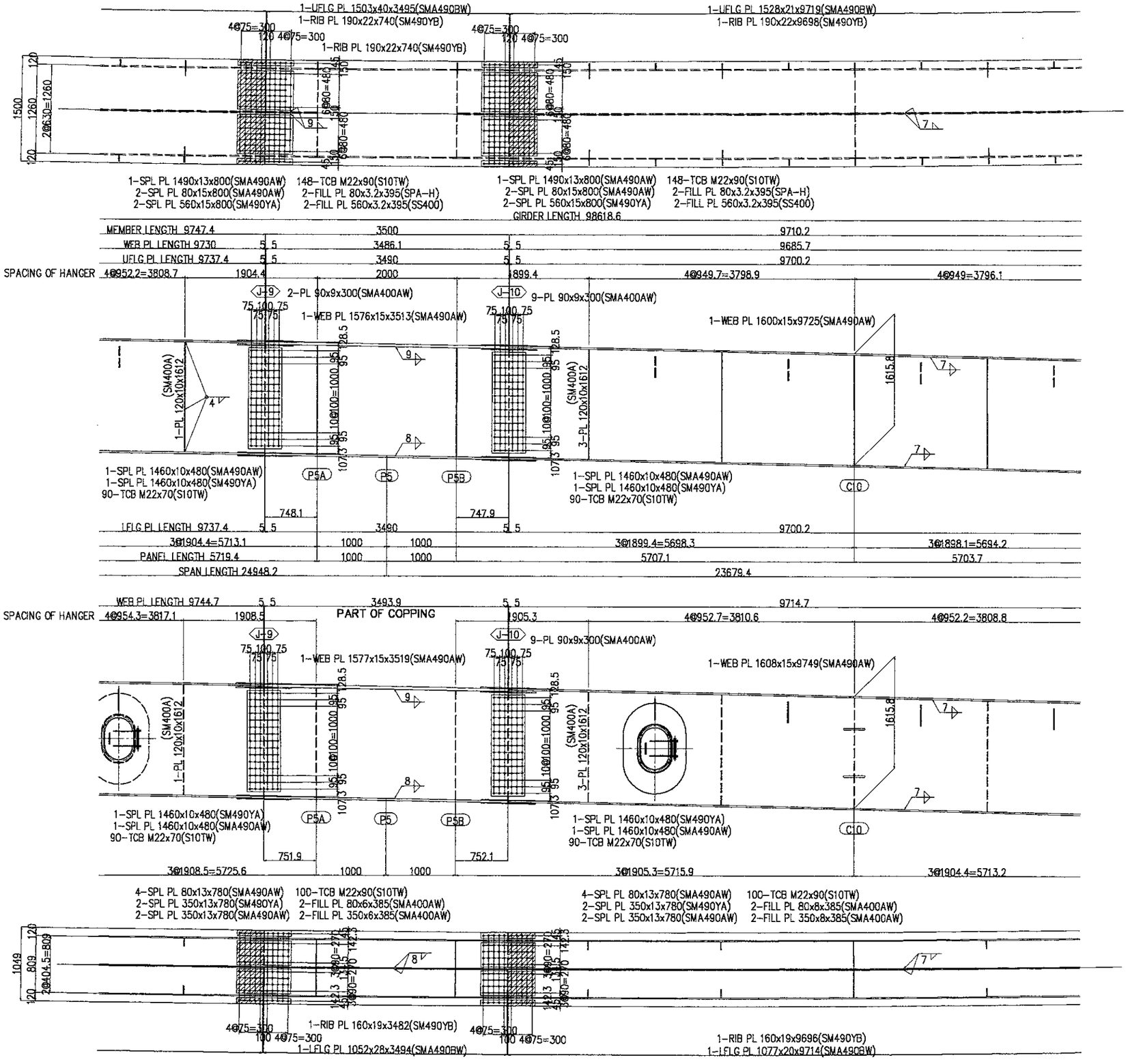

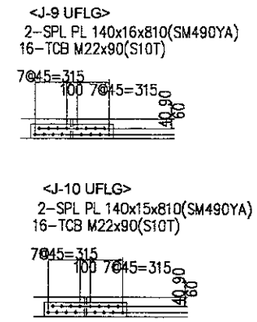

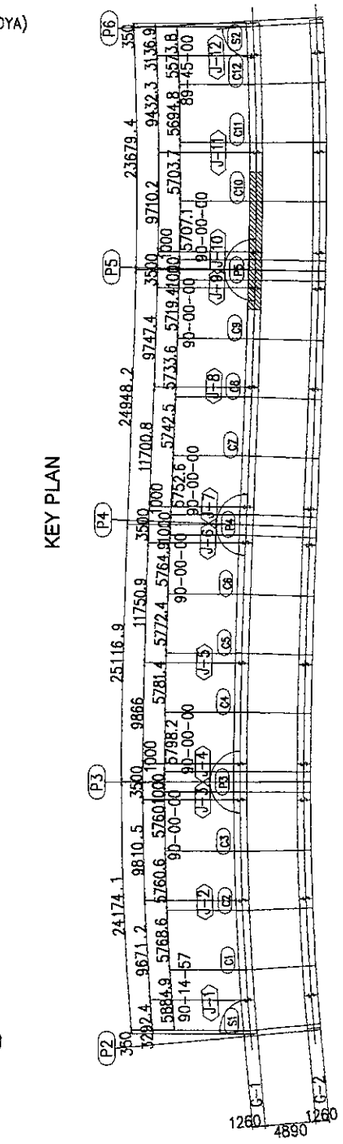

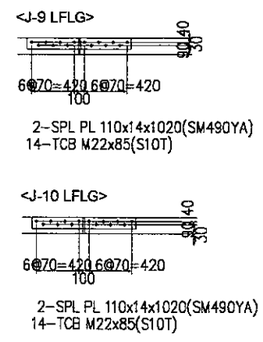

NOTES :

1. MARK "+" SHALL BE HIGH TENSION TORSION TYPE BOLT
2. ALL SCARE LOOPS SHALL BE 35 RADIUS UNLESS OTHERWISE NOTED
3. SPLICE HOLES IN FLANGE RIB PLATES SHALL BE D=26.50

JICA JAPAN INTERNATIONAL COOPERATION AGENCY	DESIGNED BY	CHECKED BY	SUBMITTED BY	REPUBLIC OF INDONESIA MINISTRY OF PUBLIC WORKS DIRECTORATE GENERAL OF HIGHWAYS	PROJECT AND LOCATION :	SCALE :	DRAWING TITLE :	DRAWING NO :
KEI KATAHIRA & ENGINEERS INTERNATIONAL	Name S. MATSUI	Name T. OKUMURA	Name M. KIUCHI	APPROVED BY Ir. HERRY VAZA M,Eng.Sc NIP. : 110038400	DETAILED DESIGN STUDY OF NORTH JAVA CORRIDOR FLYOVER PROJECT TANGGULANGIN FLYOVER - CONTRACT PACKAGE 3 (PETERONGAN - TANGGULANGIN) EAST JAVA PROVINCE	1 : 60	DETAIL OF GIRDER G1 (7 OF 7)	TST-19
	Sign	Sign	Sign	Sign		FULL SIZE A3		SHEET NO : 19 / 46
	Date	Date	Date	Date				

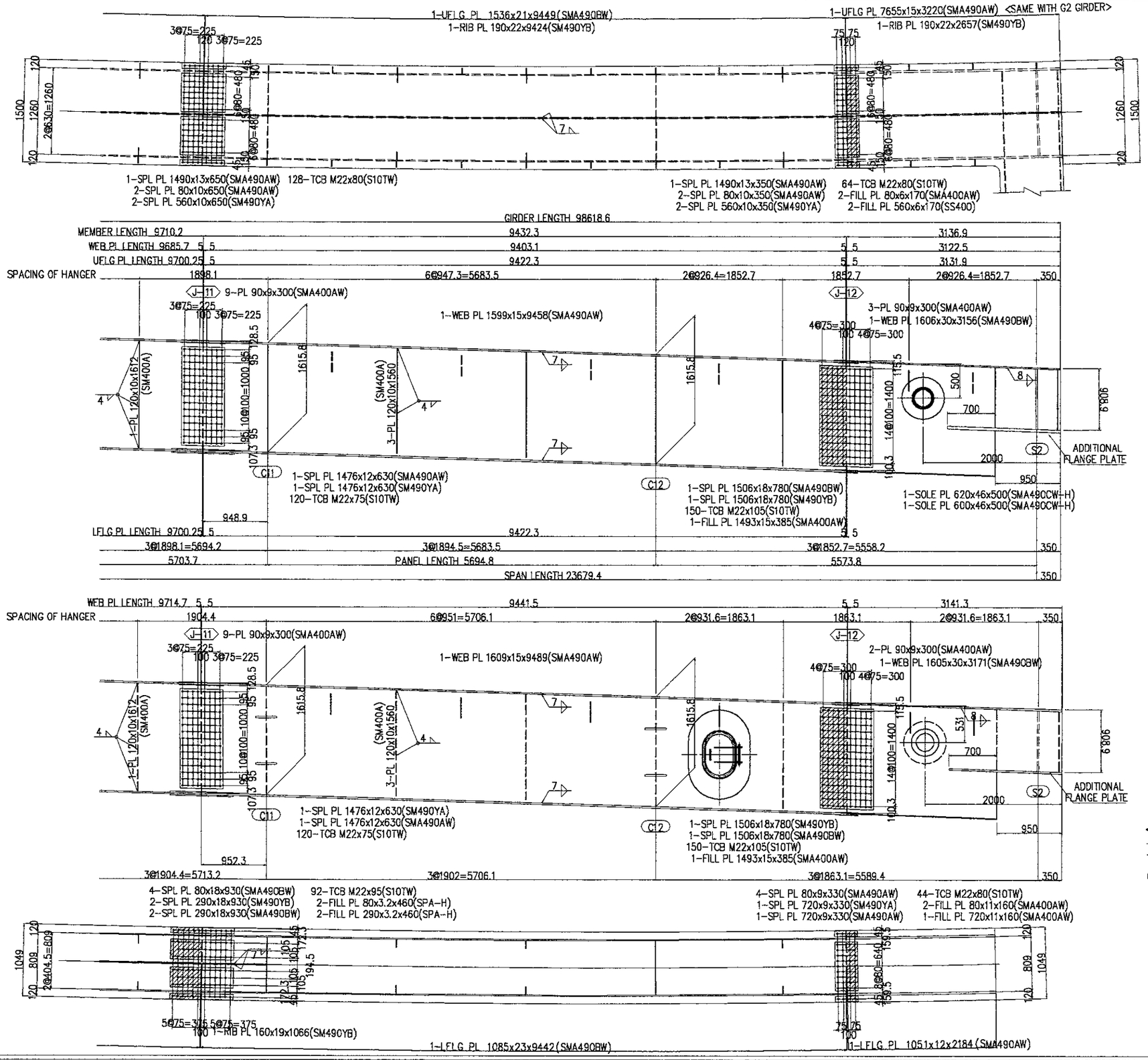

NOTES :

1. MARK "+" SHALL BE HIGH TENSION TORSION TYPE BOLT
2. ALL SCARE LOOPS SHALL BE 35 RADIUS UNLESS OTHERWISE NOTED
3. SPLICE HOLES IN FLANGE RIB PLATES SHALL BE D=26.50

JAPAN INTERNATIONAL COOPERATION AGENCY / KATAHIRA & ENGINEERS INTERNATIONAL	DESIGNED BY	CHECKED BY	SUBMITTED BY	REPUBLIC OF INDONESIA MINISTRY OF PUBLIC WORKS DIRECTORATE GENERAL OF HIGHWAYS	PROJECT AND LOCATION :	SCALE :	DRAWING TITLE :	DRAWING NO :
	Name: S. MATSUI	Name: T. OKUMURA	Name: M. KIUCHI		DETAILED DESIGN STUDY OF NORTH JAVA CORRIDOR FLYOVER PROJECT TANGGULANGIN FLYOVER - CONTRACT PACKAGE 3 (PETERONGAN - TANGGULANGIN) EAST JAVA PROVINCE	1 : 60	DETAIL OF GIRDER G2 (1 OF 7)	TST-20
	Sign	Sign	Sign	APPROVED BY: Ir. HERRY VAZA M,Eng.Sc NIP. : 110038400		FULL SIZE A3		SHEET NO : 20 / 46
	Date	Date	Date	Sign / Date				

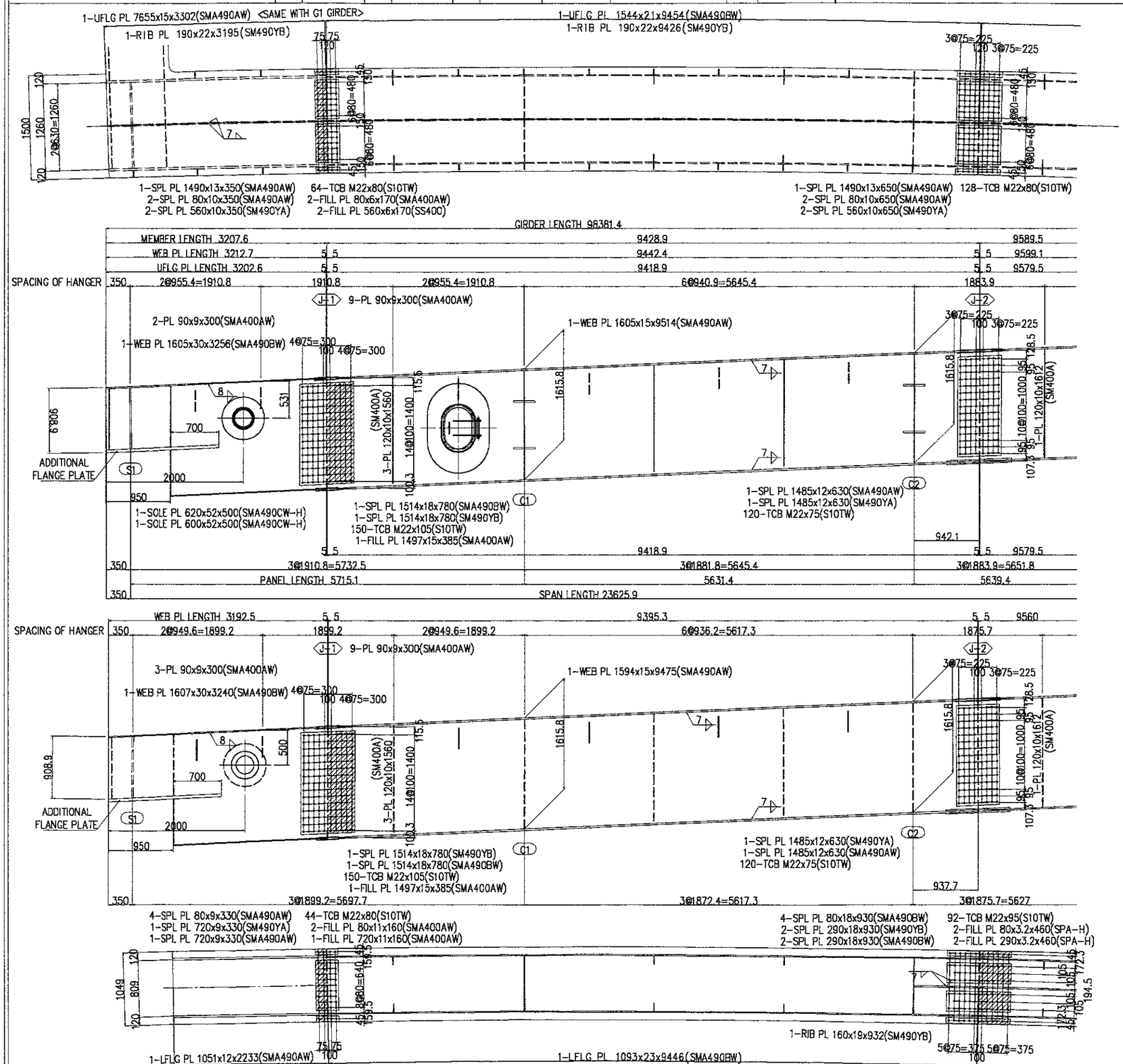

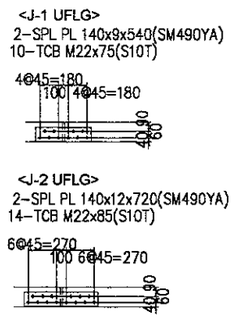

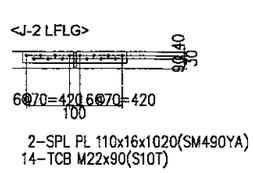

KEY PLAN

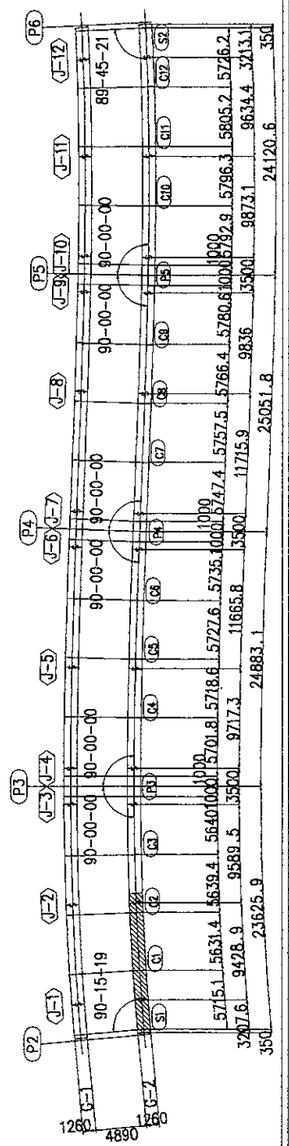

NOTES :

1. MARK "+" SHALL BE HIGH TENSION TORSION TYPE BOLT
2. ALL SCARE LOOPS SHALL BE 35 RADIUS UNLESS OTHERWISE NOTED
3. SPLICE HOLES IN FLANGE RIB PLATES SHALL BE D=26.50