JAPAN INTERNATIONAL
COOPERATION AGENCY

DIRECTORATE GENERAL OF HIGHWAY
MINISTRY OF PUBLIC WORKS
REPUBLIC OF INDONESIA

DRAINAGE

KATAHIRA & ENGINEERS INTERNATIONAL

JICA JAPAN INTERNATIONAL COOPERATION AGENCY / KEI KATAHIRA & ENGINEERS INTERNATIONAL	DESIGNED BY	CHECKED BY	SUBMITTED BY	REPUBLIC OF INDONESIA MINISTRY OF PUBLIC WORKS DIRECTORATE GENERAL OF HIGHWAYS	PROJECT AND LOCATION :	SCALE :	DRAWING TITLE :	DRAWING NO :
	Name: R. UENO	Name: T. OKUMURA	Name: M. KIUCHI		DETAILED DESIGN STUDY OF NORTH JAVA CORRIDOR FLYOVER PROJECT TANGGULANGIN FLYOVER - CONTRACT PACKAGE 3 (PETERONGAN -TANGGULANGIN) EAST JAVA PROVINCE	NTS	DRAINAGE SCHEDULE AT GRADE	TDG-001
	Sign:	Sign:	Sign:	APPROVED BY: ir. HERRY VAZA M,Eng.Sc NIP. : 110038400 Sign:		FULL SIZE A3		SHEET NO : 01 / 19
	Date:	Date:	Date:	Date:				

DRAINAGE SLOPE RIGHT

FROM MH	TO MH	TYPE OF U'DITCH/PIPE	LENGTH (m)	SLOPE (%)	FINISHED AT MANHOLE(m) UPSTREAM	FINISHED AT MANHOLE(m) DOWNSTREAM	INVERT ELEV.(m) UPSTREAM	INVERT ELEV.(m) DOWNSTREAM
DRAINAGE SLOPE DMH-01 TO DMH-11								
DMH-01	DMH-02	U'DITCH DS 4	20	0.402	3.904	3.876	3.364	3.288
DMH-02	DMH-03	U'DITCH DS 4	20	0.402	3.876	3.859	3.288	3.212
DMH-03	DMH-04	U'DITCH DS 4	20	0.402	3.859	3.830	3.212	3.136
DMH-04	DMH-05	U'DITCH DS 4	20	0.402	3.830	3.768	3.136	3.059
DMH-05	DMH-06	U'DITCH DS 4	20	0.402	3.768	3.739	3.059	2.983
DMH-06	DMH-07	U'DITCH DS 4	11.2	0.402	3.739	3.763	2.983	2.940
DMH-07	DMH-08	RCP ø800 (A)	20	0.402	3.763	3.710	1.800	1.722
DMH-08	DMH-09	RCP ø800 (A)	20	0.402	3.710	3.836	1.722	1.642
DMH-09	DMH-10	RCP ø800 (A)	20	0.402	3.836	3.891	1.642	1.561
DMH-10	DMH-11	RCP ø800 (A)	21.6	0.402	3.891	3.951	1.561	1.475
DMH-11	–	RCP ø800 (A)	7.5	0.402	3.951	–	1.475	–
DRAINAGE SLOPE DMH-17 TO DMH-12								
DMH-17	DMH-16	U'DITCH DS 4	20	0.402	3.550	3.514	3.069	2.966
DMH-16	DMH-15	U'DITCH DS 4	13.9	0.402	3.514	3.507	2.966	2.895
DMH-15	DMH-14	U'DITCH DS 4	28.1	0.402	3.507	3.669	2.895	2.766
DMH-14	DMH-13	U'DITCH DS 4	20	0.402	3.669	3.852	2.766	2.669
DMH-13	DMH-12	U'DITCH DS 4	20.8	0.402	3.852	3.957	2.669	2.567
DMH-12	–	U'DITCH DS 3	6.2	0.402	3.957	–	2.567	–
DRAINAGE SLOPE DMH-50 TO DMH-18								
EXISTING	DMH-50A	RCP ø400 (A)	2.5	–	–	4.459	–	3.707
DMH-50A	DMH-50	U'DITCH DS 4	20	1.672	4.459	4.111	3.707	3.381
DMH-50	DMH-49	U'DITCH DS 4	20	1.714	4.111	3.795	3.381	3.054
DMH-49	DMH-48	U'DITCH DS 4	20	0.927	3.795	3.556	3.054	2.868
DMH-48	DMH-47	U'DITCH DS 4	20	0.372	3.556	3.440	2.868	2.797
DMH-47	DMH-46	U'DITCH DS 4	20	0.374	3.440	3.292	2.797	2.724
DMH-46	DMH-45	U'DITCH DS 4	20	0.371	3.292	3.219	2.724	2.652
DMH-45	DMH-44	U'DITCH DS 4	9.5	0.391	3.219	3.171	2.652	2.616
DMH-44	DMH-43	U'DITCH DS 4	10	0.378	3.171	3.144	2.616	2.581
DMH-43	DMH-42	U'DITCH DS 4	15	0.289	3.144	3.291	2.581	2.539
DMH-42	DMH-41	U'DITCH DS 4	10	0.300	3.291	3.343	2.539	2.512
DMH-41	DMH-40	U'DITCH DS 4	10	0.300	3.343	3.347	2.512	2.485
DMH-40	DMH-39	U'DITCH DS 4	10	0.300	3.347	3.332	2.485	2.458
DMH-39	DMH-38	U'DITCH DS 4	10	0.300	3.332	3.318	2.458	2.431
DMH-38	DMH-37	U'DITCH DS 4	10	0.300	3.318	3.330	2.431	2.404
DMH-37	DMH-36	U'DITCH DS 4	11.5	0.297	3.330	3.353	2.404	2.374
DMH-36	DMH-35	U'DITCH DS 4	15	0.290	3.353	3.432	2.374	2.334
DMH-35	DMH-34	U'DITCH DS 4	20	0.290	3.432	3.471	2.334	2.294
DMH-34	DMH-33	U'DITCH DS 4	15	0.290	3.471	3.459	2.294	2.254
DMH-33	DMH-32	U'DITCH DS 4	15	0.290	3.459	3.388	2.254	2.215
DMH-32	DMH-31	U'DITCH DS 4	15	0.290	3.388	3.286	2.215	2.175
DMH-31	DMH-30	U'DITCH DS 4	15	0.290	3.286	3.225	2.175	2.135
DMH-30	DMH-29	U'DITCH DS 4	15	0.290	3.225	3.210	2.135	2.094
DMH-29	DMH-28	U'DITCH DS 4	15	0.290	3.210	3.217	2.094	2.053
DMH-28	DMH-27	U'DITCH DS 4	15	0.290	3.217	3.224	2.053	2.013
DMH-27	DMH-26	U'DITCH DS 4	15	0.291	3.224	3.231	2.013	1.972
DMH-26	DMH-25	U'DITCH DS 4	15	0.281	3.231	3.239	1.972	1.931
DMH-25	DMH-24	U'DITCH DS 4	10.9	0.290	3.239	3.244	1.931	1.901
DMH-24	DMH-23	U'DITCH DS 4	20	0.297	3.244	3.253	1.901	1.848
DMH-23	DMH-22	U'DITCH DS 4	20	0.285	3.253	3.262	1.848	1.799
DMH-22	DMH-21	RCP ø800 (A)	20	0.287	3.262	3.272	1.799	1.744
DMH-21	DMH-20	RCP ø800 (A)	20	0.285	3.272	3.285	1.744	1.692
DMH-20	DMH-19	RCP ø800 (A)	20	0.286	3.285	3.299	1.692	1.639
DMH-19	DMH-18	RCP ø800 (A)	20	0.286	3.299	3.318	1.639	1.601
DMH-18	–	RCP ø800 (A)	7.3	0.402	3.316	–	1.601	–

NO. MANHOLE	TYPE OF MANHOLE	DIMENSION OF MANHOLE WIDTH	LENGTH	HEIGHT
DMH-01	TYPE I	1250	1370	690
DMH-02	TYPE I	1250	1370	738
DMH-03	TYPE I	1250	1370	797
DMH-04	TYPE I	1250	1370	844
DMH-05	TYPE I	1250	1370	859
DMH-06	TYPE I	1250	1370	906
DMH-07	TYPE VI	1250	1340	2113
DMH-08	TYPE III	1250	1370	2138
DMH-09	TYPE III	1250	1370	2344
DMH-10	TYPE III	1250	1370	2330
DMH-11	TYPE III	1250	1370	2626
DMH-17	TYPE I	1250	1370	631
DMH-16	TYPE I	1250	1370	698
DMH-15	TYPE V	1250	1340	762
DMH-14	TYPE I	1250	1370	1053
DMH-13	TYPE I	1250	1370	1333
DMH-12	TYPE I	1250	1370	1540
DMH-50A	TYPE II	1250	1370	902
DMH-50	TYPE I	1250	1370	880
DMH-49	TYPE I	1250	1370	891
DMH-48	TYPE I	1250	1370	838
DMH-47	TYPE I	1250	1370	793
DMH-46	TYPE I	1250	1370	718
DMH-45	TYPE I	1250	1370	717
DMH-44	TYPE I	1250	1370	705
DMH-43	TYPE I	1250	1370	713
DMH-42	TYPE I	1250	1370	902
DMH-41	TYPE I	1250	1370	981
DMH-40	TYPE I	1250	1370	1012
DMH-39	TYPE I	1250	1370	1024
DMH-38	TYPE I	1250	1370	1037
DMH-37	TYPE I	1250	1370	1076
DMH-36	TYPE V	1250	1340	2000
DMH-35	TYPE I	1250	1370	1248
DMH-34	TYPE I	1250	1370	1327
DMH-33	TYPE I	1250	1370	1355
DMH-32	TYPE I	1250	1370	1323
DMH-31	TYPE I	1250	1370	1261
DMH-30	TYPE I	1250	1370	1240
DMH-29	TYPE I	1250	1370	1266
DMH-28	TYPE I	1250	1370	1314
DMH-27	TYPE I	1250	1370	1361
DMH-26	TYPE I	1250	1370	1409
DMH-25	TYPE I	1250	1370	1458
DMH-24	TYPE V	1250	1340	1493
DMH-23	TYPE I	1250	1370	1555
DMH-22	TYPE VI	1588	1340	1613
DMH-21	TYPE III	1588	1370	1678
DMH-20	TYPE III	1588	1370	1743
DMH-19	TYPE III	1588	1370	1810
DMH-18	TYPE III	1588	1370	1865

DRAINAGE SLOPE LEFT

FROM MH	TO MH	TYPE OF U'DITCH/PIPE	LENGTH (m)	SLOPE (%)	FINISHED AT MANHOLE(m) UPSTREAM	FINISHED AT MANHOLE(m) DOWNSTREAM	INVERT ELEV.(m) UPSTREAM	INVERT ELEV.(m) DOWNSTREAM
DRAINAGE SLOPE DMH-51 TO DMH-60								
EXISTING	DMH-51	RCP ø400 (A)	3	–	–	3.903	–	3.362
DMH-51	DMH-52	U'DITCH DS 4	20	0.39	3.903	3.877	3.362	3.285
DMH-52	DMH-53	U'DITCH DS 4	20	0.40	3.877	3.858	3.285	3.208
DMH-53	DMH-54	U'DITCH DS 4	27.2	0.40	3.858	3.811	3.208	3.103
DMH-54	DMH-55	U'DITCH DS 4	8.8	0.43	3.811	3.780	3.103	3.070
DMH-55	DMH-56	U'DITCH DS 4	16.9	0.41	3.780	3.726	3.070	3.005
DMH-56	DMH-57	U'DITCH DS 4	16.9	0.41	3.726	3.763	3.005	2.940
DMH-57	DMH-58	RCP ø800 (A)	20	0.40	3.763	3.559	1.800	1.722
DMH-58	DMH-59	RCP ø800 (A)	20	0.40	3.559	3.602	1.722	1.641
DMH-59	DMH-60	RCP ø800 (A)	22.8	0.40	3.602	3.735	1.641	1.550
DMH-60	–	RCP ø800 (A)	5.7	0.40	3.735	–	1.550	–
DRAINAGE SLOPE DMH-65 TO DMH-61								
DMH-65	DMH-64	U'DITCH DS 4	16.7	0.61	3.602	3.578	2.969	2.869
DMH-64	DMH-63	U'DITCH DS 4	7.5	0.61	3.578	3.592	2.869	2.832
DMH-63	DMH-62	U'DITCH DS 4	20	0.31	3.592	3.699	2.832	2.771
DMH-62	DMH-61	U'DITCH DS 4	26.2	0.31	3.699	3.854	2.771	2.690
DMH-61	–	U'DITCH DS 4	8	0.31	3.854	–	2.690	–
DRAINAGE SLOPE DMH-66 TO DMH-68								
DMH-66	DMH-67	U'DITCH DS 4	14.2	0.71	3.440	3.440	2.916	2.820
DMH-67	DMH-68	U'DITCH DS 4	14.2	0.71	3.440	3.390	2.820	2.494
DMH-68	–	–	–	–	3.390	–	2.494	–
DRAINAGE SLOPE DMH-71 TO DMH-68								
DMH-71	DMH-70	U'DITCH DS 4	15.4	0.63	3.301	3.347	2.776	2.683
DMH-70	DMH-69	U'DITCH DS 4	15.4	0.63	3.347	3.368	2.683	2.589
DMH-69	DMH-68	U'DITCH DS 4	15.4	0.63	3.368	3.390	2.589	2.494
DRAINAGE SLOPE DMH-72 TO DMH-97								
DMH-72	DMH-73	U'DITCH DS 4	20	0.32	3.268	3.161	2.776	2.714
DMH-73	DMH-74	U'DITCH DS 4	10	0.34	3.161	3.147	2.714	2.682
DMH-74	DMH-75	U'DITCH DS 4	10	0.34	3.147	3.163	2.682	2.650
DMH-75	DMH-76	U'DITCH DS 4	15	0.33	3.163	3.210	2.650	2.602
DMH-76	DMH-77	U'DITCH DS 4	15	0.33	3.210	3.231	2.602	2.556
DMH-77	DMH-78	U'DITCH DS 4	15	0.33	3.231	3.225	2.556	2.510
DMH-78	DMH-79	U'DITCH DS 4	15	0.33	3.225	3.207	2.510	2.464
DMH-79	DMH-80	U'DITCH DS 4	15	0.33	3.207	3.195	2.464	2.418
DMH-80	DMH-81	U'DITCH DS 4	15	0.33	3.195	3.193	2.418	2.372
DMH-81	DMH-82	U'DITCH DS 4	10	0.34	3.193	3.195	2.372	2.342
DMH-82	DMH-83	U'DITCH DS 4	10	0.34	3.195	3.197	2.342	2.311
DMH-83	DMH-84	U'DITCH DS 4	10	0.34	3.197	3.199	2.311	2.281
DMH-84	DMH-85	U'DITCH DS 4	10	0.34	3.199	3.201	2.281	2.250
DMH-85	DMH-86	U'DITCH DS 4	10	0.34	3.201	3.204	2.250	2.218
DMH-86	DMH-87	U'DITCH DS 4	10	0.32	3.204	3.208	2.218	2.187
DMH-87	DMH-88	U'DITCH DS 4	10	0.34	3.206	3.208	2.187	2.156
DMH-88	DMH-89	U'DITCH DS 4	10	0.34	3.208	3.210	2.156	2.124
DMH-89	DMH-90	U'DITCH DS 4	10	0.34	3.210	3.213	2.124	2.093
DMH-90	DMH-91	U'DITCH DS 4	10	0.34	3.213	3.215	2.093	2.061
DMH-91	DMH-92	U'DITCH DS 4	10	0.34	3.215	3.217	2.061	2.030
DMH-92	DMH-93	U'DITCH DS 4	10	0.34	3.217	3.344	2.030	1.999
DMH-93	DMH-94	U'DITCH DS 4	20	0.32	3.344	3.325	1.999	1.937
DMH-94	DMH-95	U'DITCH DS 4	20	0.32	3.325	3.355	1.937	1.875
DMH-95	DMH-96	U'DITCH DS 4	14.7	0.34	3.355	3.292	1.875	1.831
DMH-96	DMH-97	U'DITCH DS 4	14.7	0.32	3.292	3.153	1.831	1.787
DMH-97	–	U'DITCH DS 4	14.7	0.32	3.153	–	1.787	–
DRAINAGE SLOPE DMH-104 TO DMH-98								
DMH-104	DMH-103	U'DITCH DS 4	20	1.84	4.341	3.993	3.598	3.247
DMH-103	DMH-102	U'DITCH DS 4	7.7	1.81	3.993	3.874	3.247	3.125
DMH-102	DMH-101	U'DITCH DS 4	20	1.32	3.874	3.599	3.125	2.873
DMH-101	DMH-100	U'DITCH DS 4	20	0.73	3.599	3.479	2.873	2.735
DMH-100	DMH-99	U'DITCH DS 4	20	1.38	3.479	3.332	2.735	2.477
DMH-99	DMH-98	U'DITCH DS 4	20	1.38	3.332	3.446	2.477	2.220
DMH-98	–	U'DITCH DS 4	15.5	1.36	3.446	–	2.220	–

NO. MANHOLE	TYPE OF MANHOLE	DIMENSION OF MANHOLE WIDTH	LENGTH	HEIGHT
DMH-51	TYPE II	1250	1370	691
DMH-52	TYPE I	1250	1370	742
DMH-53	TYPE I	1250	1370	800
DMH-54	TYPE I	1250	1370	858
DMH-55	TYPE I	1250	1370	860
DMH-56	TYPE I	1250	1370	871
DMH-57	TYPE VI	1250	1340	2113
DMH-58	TYPE III	1250	1370	1987
DMH-59	TYPE III	1250	1370	2111
DMH-60	TYPE III	1250	1370	2335
DMH-65	TYPE I	1250	1370	783
DMH-64	TYPE I	1250	1370	859
DMH-63	TYPE I	1250	1370	910
DMH-62	TYPE I	1250	1370	1078
DMH-61	TYPE I	1250	1370	1314
DMH-66	TYPE V	1250	1340	874
DMH-67	TYPE I	1250	1370	770
DMH-68	TYPE I	1250	1370	1046
DMH-71	TYPE I	1250	1370	675
DMH-70	TYPE I	1250	1370	814
DMH-69	TYPE I	1250	1370	929
DMH-72	TYPE I	1250	1370	642
DMH-73	TYPE I	1250	1370	597
DMH-74	TYPE I	1250	1370	615
DMH-75	TYPE I	1250	1370	711
DMH-76	TYPE I	1250	1370	710
DMH-77	TYPE I	1250	1370	825
DMH-78	TYPE I	1250	1370	865
DMH-79	TYPE I	1250	1370	893
DMH-80	TYPE I	1250	1370	927
DMH-81	TYPE I	1250	1370	971
DMH-82	TYPE I	1250	1370	1003
DMH-83	TYPE I	1250	1370	1036
DMH-84	TYPE I	1250	1370	1068
DMH-85	TYPE I	1250	1370	1101
DMH-86	TYPE I	1250	1370	1136
DMH-87	TYPE I	1250	1370	1169
DMH-88	TYPE I	1250	1370	1202
DMH-89	TYPE I	1250	1370	1236
DMH-90	TYPE I	1250	1370	1270
DMH-91	TYPE I	1250	1370	1304
DMH-92	TYPE V	1250	1370	1337
DMH-93	TYPE I	1250	1370	1495
DMH-94	TYPE I	1250	1370	1538
DMH-95	TYPE I	1250	1370	1630
DMH-96	TYPE I	1250	1370	1611
DMH-97	TYPE I	1250	1370	1516
DMH-104	TYPE I	1250	1370	893
DMH-103	TYPE I	1250	1370	896
DMH-102	TYPE I	1250	1370	899
DMH-101	TYPE I	1250	1370	876
DMH-100	TYPE I	1250	1370	894
DMH-99	TYPE I	1250	1370	1005
DMH-98	TYPE I	1250	1370	1376

1 / – DRAINAGE SCHEDULE

SCALE N.T.S

JAPAN INTERNATIONAL COOPERATION AGENCY KATAHIRA & ENGINEERS INTERNATIONAL	DESIGNED BY	CHECKED BY	SUBMITTED BY	REPUBLIC OF INDONESIA MINISTRY OF PUBLIC WORKS DIRECTORATE GENERAL OF HIGHWAYS	PROJECT AND LOCATION :	SCALE :	DRAWING TITLE :	DRAWING NO :
	Name R. UENO	Name T. OKUMURA	Name M. KIUCHI		DETAILED DESIGN STUDY OF NORTH JAVA CORRIDOR FLYOVER PROJECT TANGGULANGIN FLYOVER - CONTRACT PACKAGE 3 (PETERONGAN -TANGGULANGIN) EAST JAVA PROVINCE	1 : 1000	DRAINAGE LAYOUT PLAN 1 OF 4	TDG-002
	Sign	Sign	Sign	APPROVED BY Ir. HERRY VAZA M,Eng.Sc NIP. : 110038400 Sign				SHEET NO :
	Date	Date	Date	Date		FULL SIZE A3		02 / 19

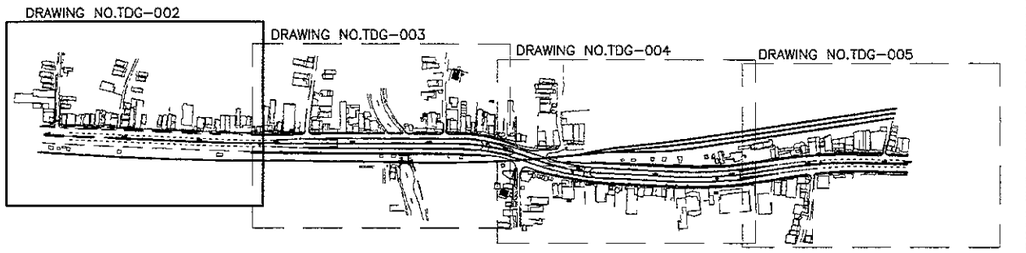

LEGEND

- : DRAINAGE MANHOLES
- : DRAINAGE LINE
- : NEW CULVERT
- : EXISTING DRAINAGE
- RCP : PIPE CULVERT, RCP-ø0.60 (A)-15.0 (DIAMETER, TYPE, LENGTH)
- DS : SIDE DRAIN, DS-2-15.0 (TYPE, LENGTH)

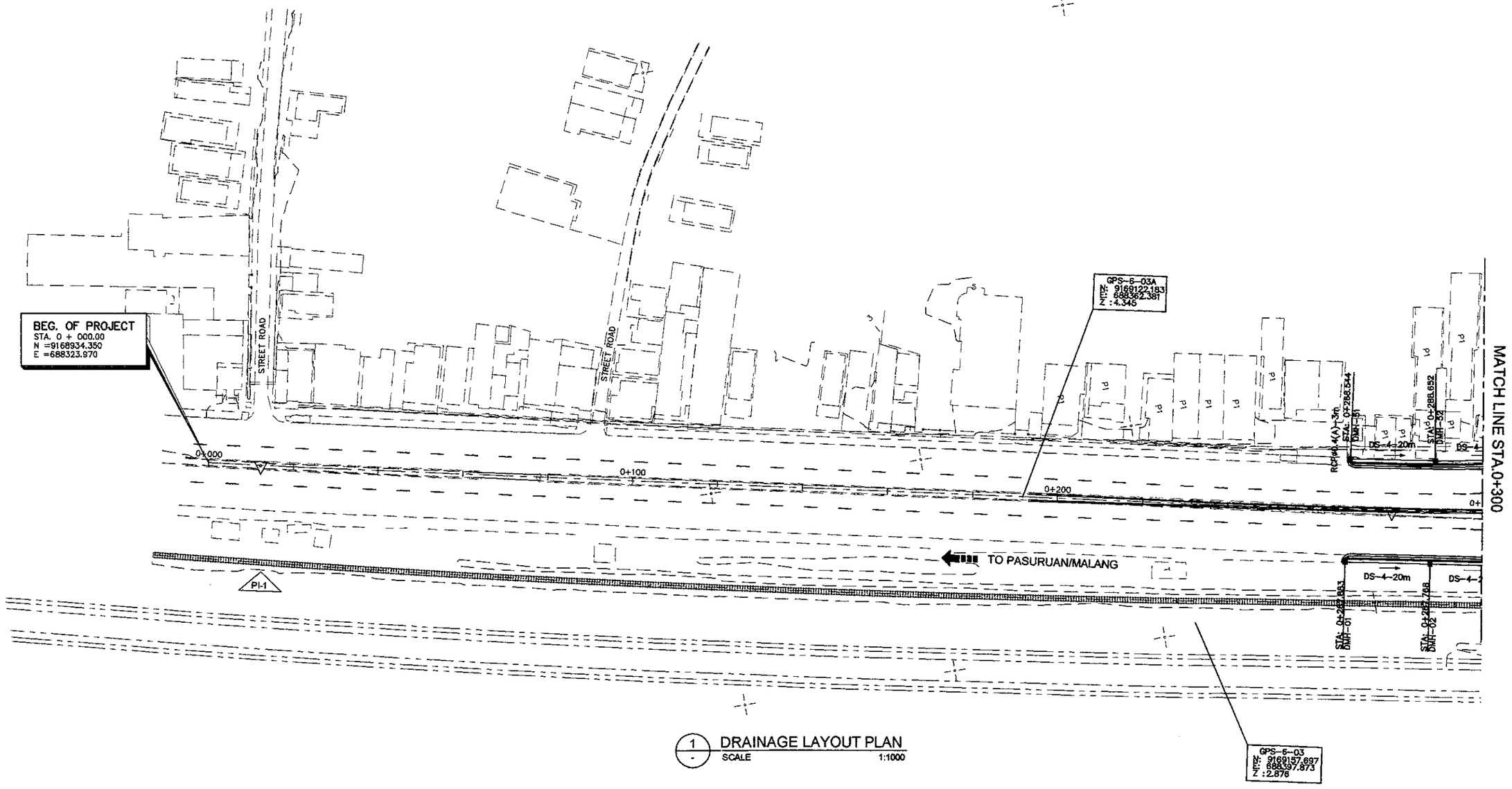

1 DRAINAGE LAYOUT PLAN
SCALE 1:1000

JICA JAPAN INTERNATIONAL COOPERATION AGENCY / KEI KATAHIRA & ENGINEERS INTERNATIONAL	DESIGNED BY	CHECKED BY	SUBMITTED BY	REPUBLIC OF INDONESIA MINISTRY OF PUBLIC WORKS DIRECTORATE GENERAL OF HIGHWAYS	PROJECT AND LOCATION :	SCALE :	DRAWING TITLE :	DRAWING NO :
	Name: R. UENO	Name: T. OKUMURA	Name: M. KIUCHI		DETAILED DESIGN STUDY OF NORTH JAVA CORRIDOR FLYOVER PROJECT TANGGULANGIN FLYOVER - CONTRACT PACKAGE 3 (PETERONGAN -TANGGULANGIN) EAST JAVA PROVINCE	1 : 1000	DRAINAGE LAYOUT PLAN 2 OF 4	TDG-003
	Sign	Sign	Sign	APPROVED BY: Ir. HERRY VAZA M,Eng.Sc NIP. : 110038400 Sign		FULL SIZE A3		SHEET NO : 03 / 19
	Date	Date	Date	Date				

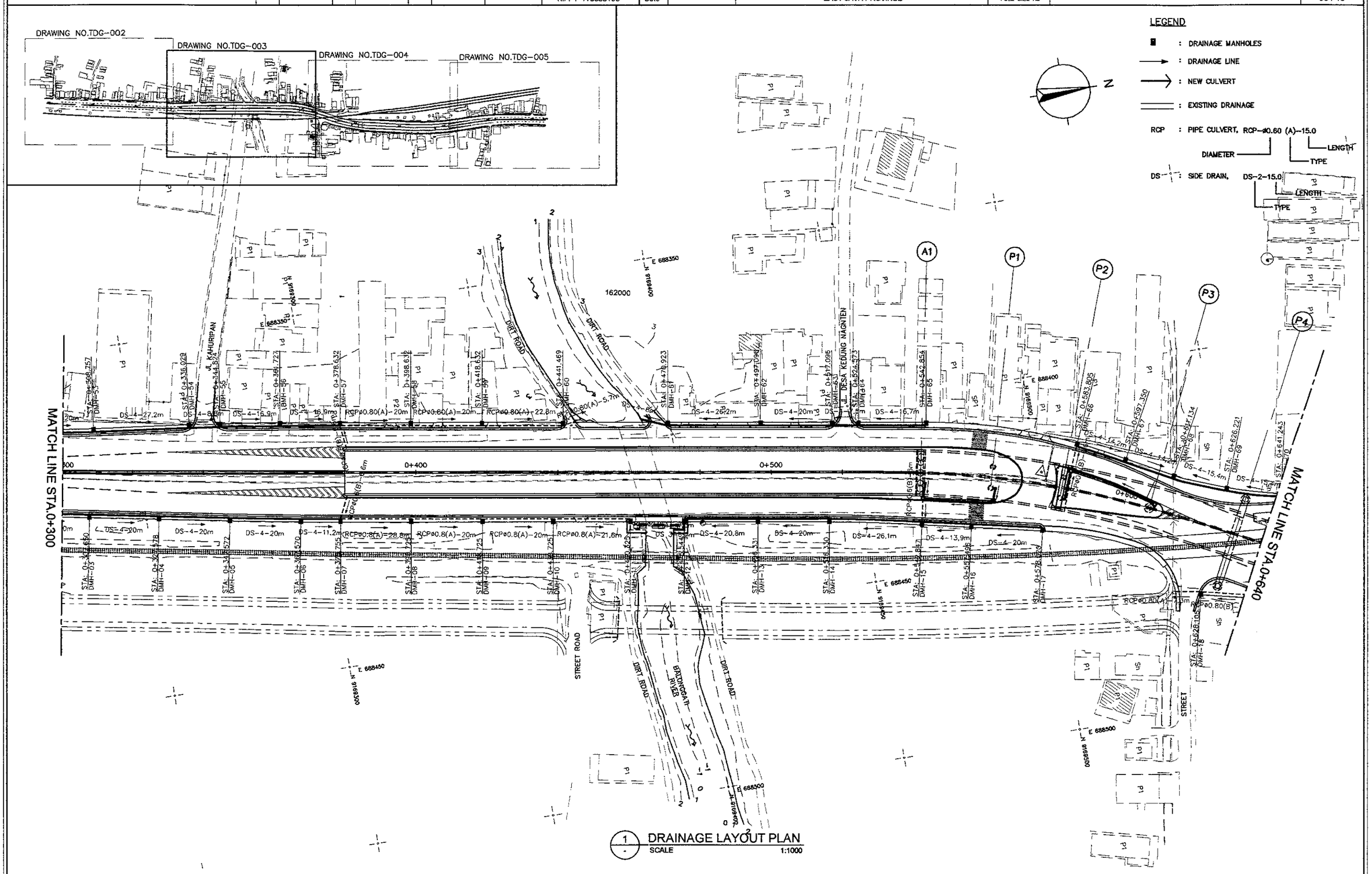

1 DRAINAGE LAYOUT PLAN
SCALE 1:1000

JICA JAPAN INTERNATIONAL COOPERATION AGENCY / KEI KATAHIRA & ENGINEERS INTERNATIONAL	DESIGNED BY	CHECKED BY	SUBMITTED BY	REPUBLIC OF INDONESIA MINISTRY OF PUBLIC WORKS DIRECTORATE GENERAL OF HIGHWAYS	PROJECT AND LOCATION :	SCALE :	DRAWING TITLE :	DRAWING NO :
	Name: R. UENO	Name: T. OKUMURA	Name: M. KIUCHI		DETAILED DESIGN STUDY OF NORTH JAVA CORRIDOR FLYOVER PROJECT TANGGULANGIN FLYOVER - CONTRACT PACKAGE 3 (PETERONGAN -TANGGULANGIN) EAST JAVA PROVINCE	1 : 1000	DRAINAGE LAYOUT PLAN 3 OF 4	TDG-004
	Sign:	Sign:	Sign:	APPROVED BY: Ir. HERRY VAZA M,Eng.Sc NIP. : 110038400 Sign:		FULL SIZE A3		SHEET NO : 04 / 19
	Date:	Date:	Date:	Date:				

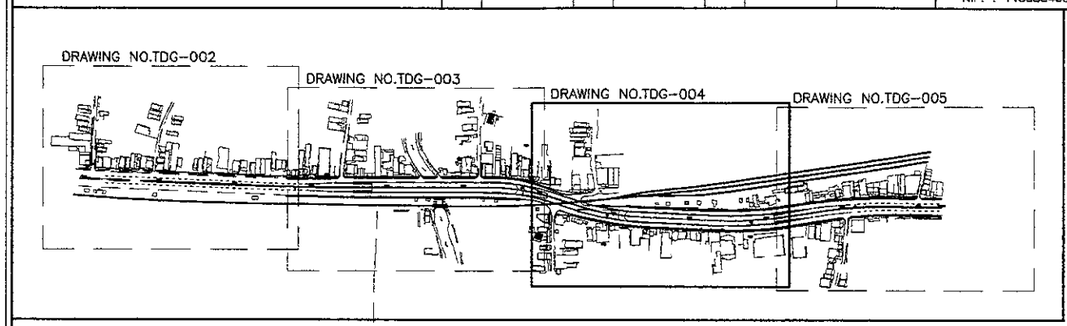

LEGEND

- : DRAINAGE MANHOLES
- : DRAINAGE LINE
- : NEW CULVERT
- : EXISTING DRAINAGE
- RCP : PIPE CULVERT, RCP-ø0.60 (A)-15.0 (DIAMETER, TYPE, LENGTH)
- DS : SIDE DRAIN, DS-2-15.0 (TYPE, LENGTH)

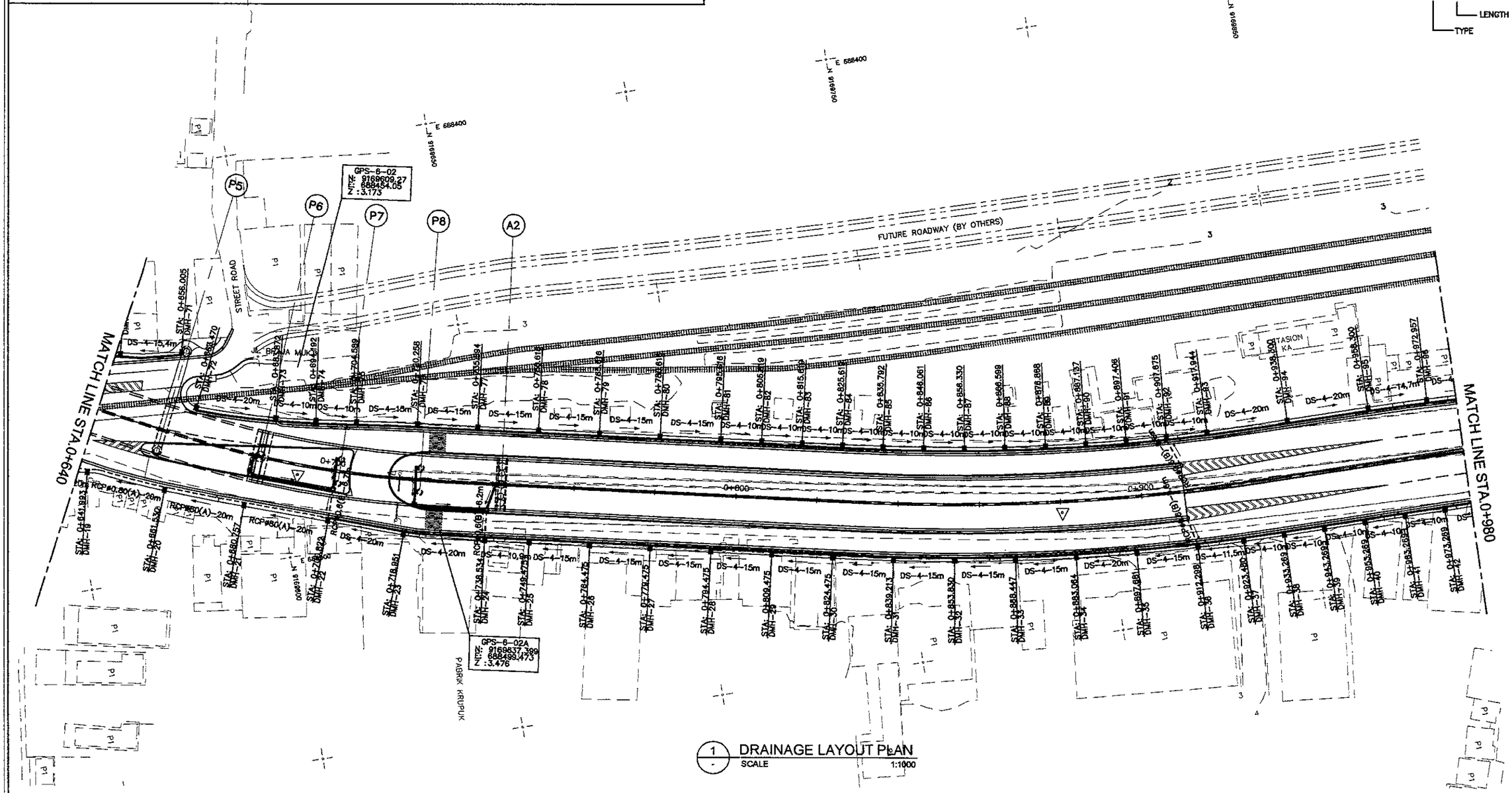

1 DRAINAGE LAYOUT PLAN
SCALE 1:1000

JICA JAPAN INTERNATIONAL COOPERATION AGENCY / KEI KATAHIRA & ENGINEERS INTERNATIONAL	DESIGNED BY	CHECKED BY	SUBMITTED BY	REPUBLIC OF INDONESIA MINISTRY OF PUBLIC WORKS DIRECTORATE GENERAL OF HIGHWAYS	PROJECT AND LOCATION :	SCALE :	DRAWING TITLE :	DRAWING NO :
	Name: R. UENO	Name: T. OKUMURA	Name: M. KIUCHI		DETAILED DESIGN STUDY OF NORTH JAVA CORRIDOR FLYOVER PROJECT TANGGULANGIN FLYOVER - CONTRACT PACKAGE 3 (PETERONGAN -TANGGULANGIN) EAST JAVA PROVINCE	1 : 1000	DRAINAGE LAYOUT PLAN 4 OF 4	TDG-005
	Sign	Sign	Sign	APPROVED BY: Ir. HERRY VAZA M,Eng.Sc NIP. : 110038400		FULL SIZE A3		SHEET NO : 05 / 19
	Date	Date	Date	Sign / Date				

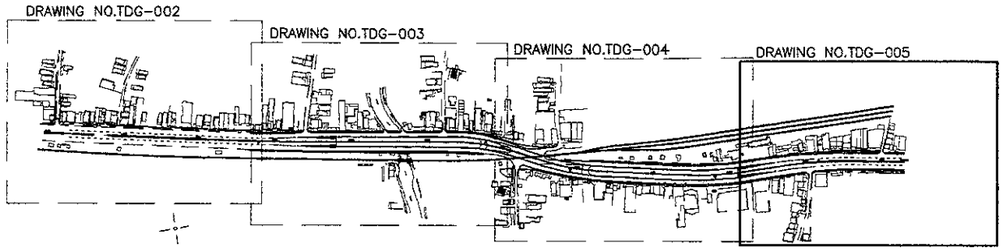

LEGEND

- : DRAINAGE MANHOLES
- : DRAINAGE LINE
- : NEW CULVERT
- : EXISTING DRAINAGE
- RCP : PIPE CULVERT, RCP-ø0.60 (A)-15.0 (DIAMETER, TYPE, LENGTH)
- DS : SIDE DRAIN, DS-2-15.0 (TYPE, LENGTH)

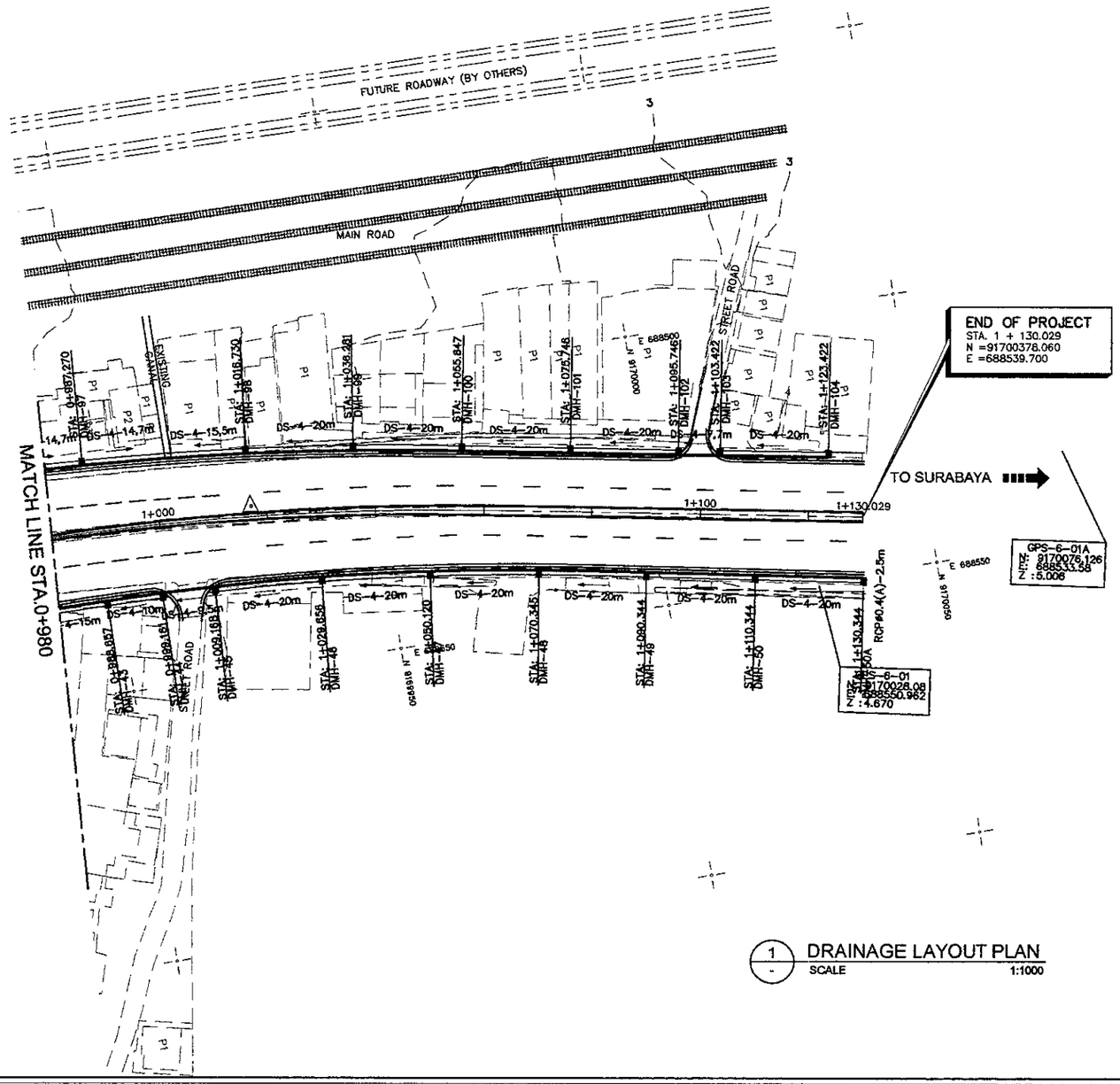

1 DRAINAGE LAYOUT PLAN
SCALE 1:1000

JICA JAPAN INTERNATIONAL COOPERATION AGENCY / KEI KATAHIRA & ENGINEERS INTERNATIONAL	DESIGNED BY	CHECKED BY	SUBMITTED BY	REPUBLIC OF INDONESIA MINISTRY OF PUBLIC WORKS DIRECTORATE GENERAL OF HIGHWAYS	PROJECT AND LOCATION :	SCALE :	DRAWING TITLE :	DRAWING NO :
	Name: R. UENO	Name: T. OKUMURA	Name: M. KIUCHI		DETAILED DESIGN STUDY OF NORTH JAVA CORRIDOR FLYOVER PROJECT TANGGULANGIN FLYOVER - CONTRACT PACKAGE 3 (PETERONGAN -TANGGULANGIN) EAST JAVA PROVINCE	1 : 1000	DRAINAGE PROFILE OF RIGHT SERVICE ROAD 1 OF 2	TDG-006
	Sign	Sign	Sign	APPROVED BY: Ir. HERRY VAZA M.Eng.Sc NIP. : 110038400				SHEET NO : 06 / 19
	Date	Date	Date	Sign / Date		FULL SIZE A3		

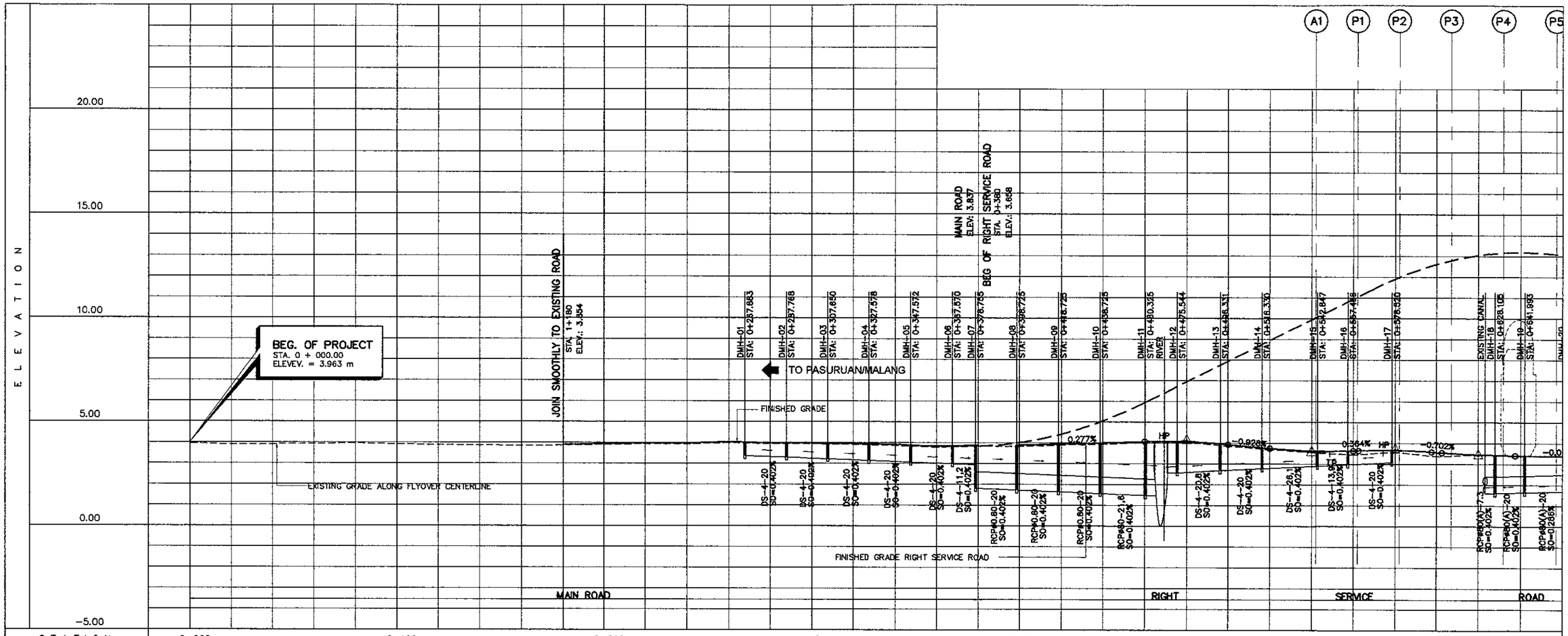

1 / - DRAINAGE PROFILE, RIGHT SERVICE ROAD (1 OF 2)

SCALE H:2000 V:2000

JICA JAPAN INTERNATIONAL COOPERATION AGENCY KATAHIRA & ENGINEERS INTERNATIONAL	DESIGNED BY Name R. UENO Sign Date	CHECKED BY Name T. OKUMURA Sign Date	SUBMITTED BY Name M. KIUCHI Sign Date

REPUBLIC OF INDONESIA
MINISTRY OF PUBLIC WORKS
DIRECTORATE GENERAL OF HIGHWAYS

APPROVED BY Ir. HERRY VAZA M.Eng.Sc — NIP. : 110038400 — Sign — Date

PROJECT AND LOCATION :
DETAILED DESIGN STUDY OF
NORTH JAVA CORRIDOR FLYOVER PROJECT
TANGGULANGIN FLYOVER - CONTRACT PACKAGE 3
(PETERONGAN -TANGGULANGIN)
EAST JAVA PROVINCE

SCALE : 1 : 1000 — FULL SIZE A3

DRAWING TITLE :
DRAINAGE PROFILE OF RIGHT SERVICE ROAD 2 OF 2

DRAWING NO : TDG-007

SHEET NO : 07 / 19

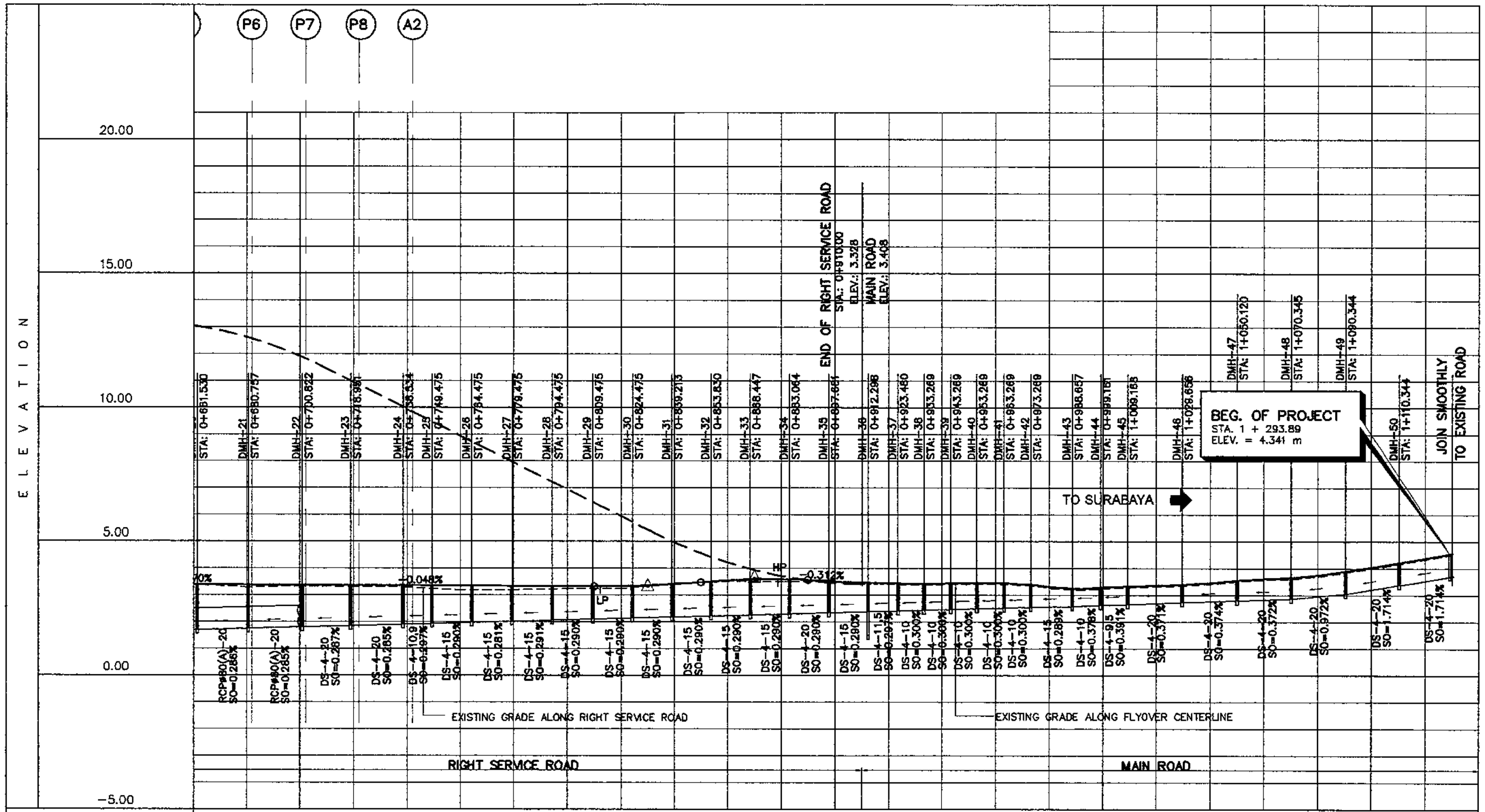

STATION	0+700											0+800				
FINISHED INVERT ELEVATION	1.718	1.774	1.825	1.880	1.911	1.953	1.995	2.037	2.079	2.121	2.162	2.203	2.244	2.285	2.326	2.367
FINISHED GRADE ELEVATION	3.382	3.372	3.363	3.354	3.349	3.341	3.334	3.327	3.320	3.335	3.398	3.498	3.569	3.581	3.542	3.483
EXISTING GROUND ELEVATION	3.287	3.317	3.290	3.287	3.236	3.180	3.184	3.219	3.234	3.342	3.431	3.587	3.500	3.493	3.486	3.463

STATION	0+900							1+000						1+100	
FINISHED INVERT ELEVATION	2.398	2.426	2.454	2.482	2.510	2.538	2.581	2.625	2.671	2.813	2.954	3.094	3.232	3.371	3.707
FINISHED GRADE ELEVATION	3.440	3.428	3.442	3.457	3.453	3.401	3.254	3.281	3.329	3.402	3.550	3.666	3.905	4.221	4.569
EXISTING GROUND ELEVATION	3.390	3.378	3.392	3.407	3.403	3.351	3.204	3.231	3.278	3.353	3.500	3.618	3.854	4.171	4.171

1 — DRAINAGE PROFILE, RIGHT SERVICE ROAD (2 OF 2)
SCALE H:2000 V:2000

JAPAN INTERNATIONAL COOPERATION AGENCY KATAHIRA & ENGINEERS INTERNATIONAL	DESIGNED BY	CHECKED BY	SUBMITTED BY	REPUBLIC OF INDONESIA MINISTRY OF PUBLIC WORKS DIRECTORATE GENERAL OF HIGHWAYS	PROJECT AND LOCATION :	SCALE :	DRAWING TITLE :	DRAWING NO :
	Name: R. UENO	Name: T. OKUMURA	Name: M. KIUCHI		DETAILED DESIGN STUDY OF NORTH JAVA CORRIDOR FLYOVER PROJECT TANGGULANGIN FLYOVER - CONTRACT PACKAGE 3 (PETERONGAN -TANGGULANGIN) EAST JAVA PROVINCE	1 : 1000	DRAINAGE PROFILE OF LEFT SERVICE ROAD 1 OF 2	TDG-008
	Sign	Sign	Sign	APPROVED BY: Ir. HERRY VAZA M,Eng.Sc NIP. : 110038400 — Sign				SHEET NO :
	Date	Date	Date	Date		FULL SIZE A3		08 / 19

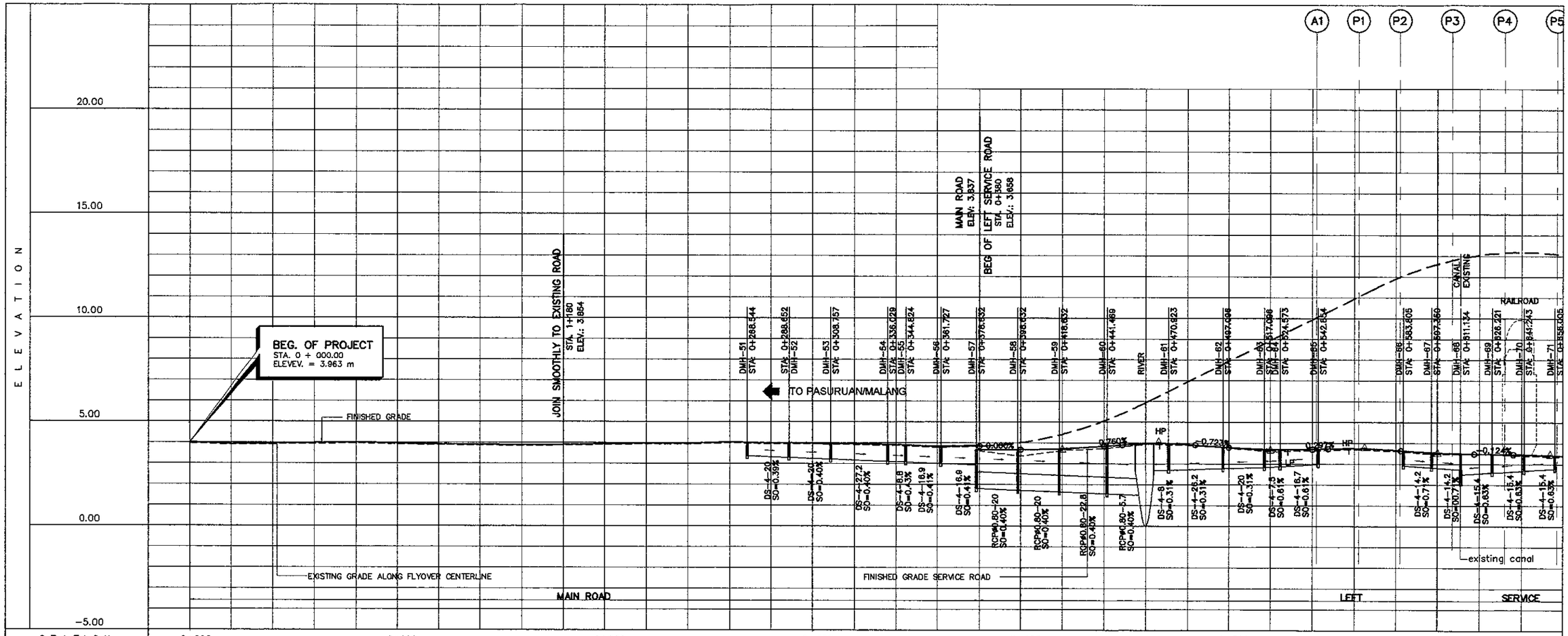

1 DRAINAGE PROFILE, LEFT SERVICE ROAD (1 OF 2)

SCALE H:2000 V:2000

JICA JAPAN INTERNATIONAL COOPERATION AGENCY / KEI KATAHIRA & ENGINEERS INTERNATIONAL	DESIGNED BY: Name R. UENO, Sign, Date	CHECKED BY: Name T. OKUMURA, Sign, Date	SUBMITTED BY: Name M. KIUCHI, Sign, Date	REPUBLIC OF INDONESIA MINISTRY OF PUBLIC WORKS DIRECTORATE GENERAL OF HIGHWAYS	APPROVED BY: Ir. HERRY VAZA M,Eng.Sc, NIP. : 110038400, Sign, Date	PROJECT AND LOCATION : DETAILED DESIGN STUDY OF NORTH JAVA CORRIDOR FLYOVER PROJECT TANGGULANGIN FLYOVER - CONTRACT PACKAGE 3 (PETERONGAN -TANGGULANGIN) EAST JAVA PROVINCE	SCALE : 1 : 1000 FULL SIZE A3	DRAWING TITLE : DRAINAGE PROFILE OF LEFT SERVICE ROAD 2 OF 2	DRAWING NO : TDG-009 SHEET NO : 09 / 19

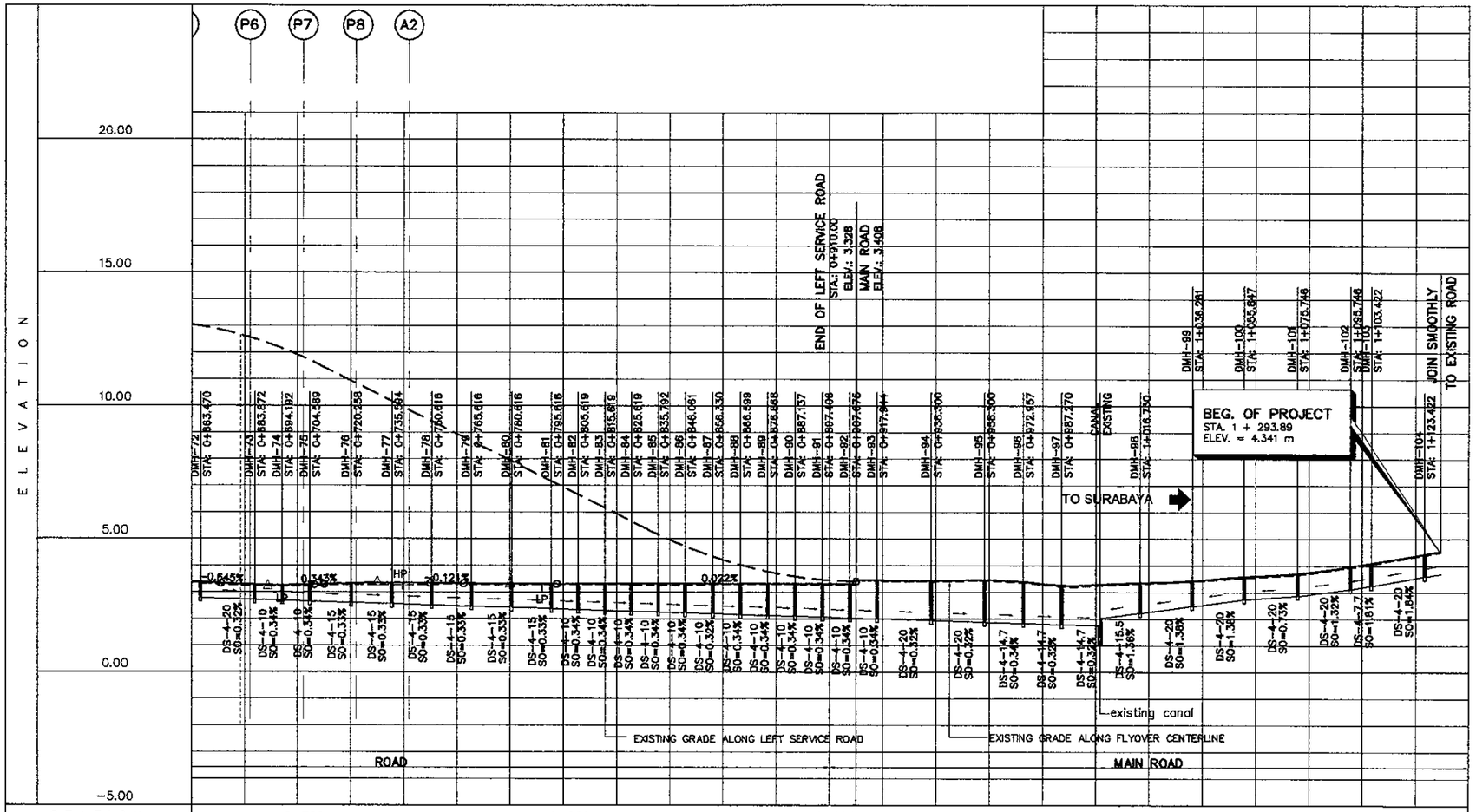

STATION	0+700									0+800										0+900										1+000										1+100			
FINISHED INVERT ELEVATION	2.776	2.714	2.682	2.650	2.602	2.556	2.510	2.484	2.418	2.372	2.342	2.311	2.281	2.250	2.218	2.187	2.156	2.124	2.093	2.061	2.030	1.999	1.937	1.875	1.831	1.787	2.220	2.477	2.735	2.873	3.125	3.247	3.598
FINISHED GRADE ELEVATION	3.376	3.271	3.257	3.273	3.320	3.341	3.335	3.317	3.305	3.303	3.305	3.307	3.309	3.311	3.314	3.316	3.318	3.320	3.323	3.325	3.327	3.454	3.435	3.485	3.402	3.283	3.358	3.442	3.589	3.709	3.984	4.103	4.451
EXISTING GROUND ELEVATION	3.331	3.222	3.211	3.222	3.274	3.281	3.271	3.274	3.25	3.268	3.273	3.271	3.262	3.247	3.249	3.285	3.273	3.277	3.274	3.266	3.271	3.279	3.385	3.414	3.353	3.213	3.308	3.392	3.539	3.659	3.934	4.053	4.400

1 / - DRAINAGE PROFILE, LEFT SERVICE ROAD (2 OF 2)

SCALE H:2000 V:2000

JICA JAPAN INTERNATIONAL COOPERATION AGENCY / KEI KATAHIRA & ENGINEERS INTERNATIONAL	DESIGNED BY	CHECKED BY	SUBMITTED BY	REPUBLIC OF INDONESIA MINISTRY OF PUBLIC WORKS DIRECTORATE GENERAL OF HIGHWAYS	PROJECT AND LOCATION :	SCALE :	DRAWING TITLE :	DRAWING NO :
	Name: R. UENO	Name: T. OKUMURA	Name: M. KIUCHI		DETAILED DESIGN STUDY OF NORTH JAVA CORRIDOR FLYOVER PROJECT TANGGULANGIN FLYOVER - CONTRACT PACKAGE 3 (PETERONGAN -TANGGULANGIN) EAST JAVA PROVINCE	1 : 20	STANDARD REINFORCEMENT CONCRETE PIPE CULVERT	TDG-010
	Sign	Sign	Sign	APPROVED BY: Ir. HERRY VAZA M,Eng.Sc NIP. : 110038400 — Sign				SHEET NO :
	Date	Date	Date	Date		FULL SIZE A3		10 / 19

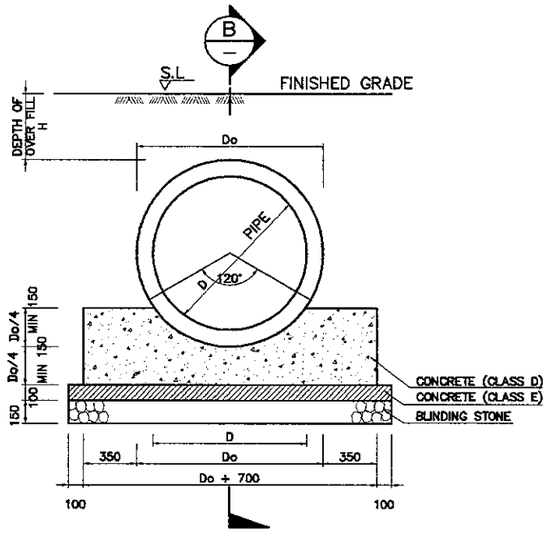

1B SECTION A-A
SCALE 1:10

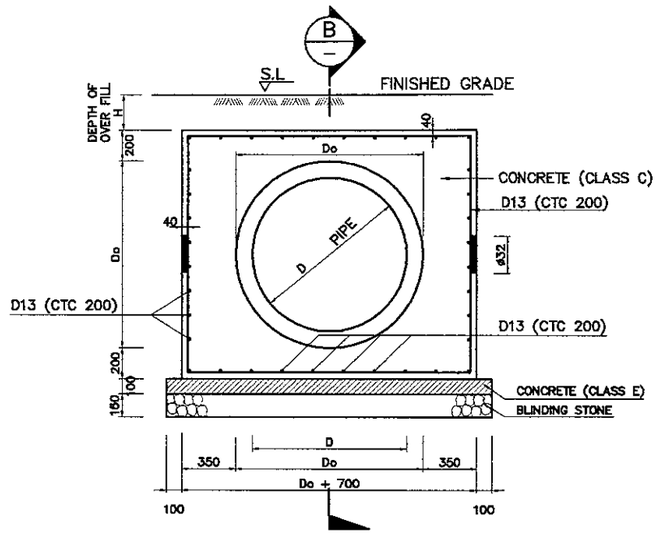

2B SECTION A-A
SCALE 1:10

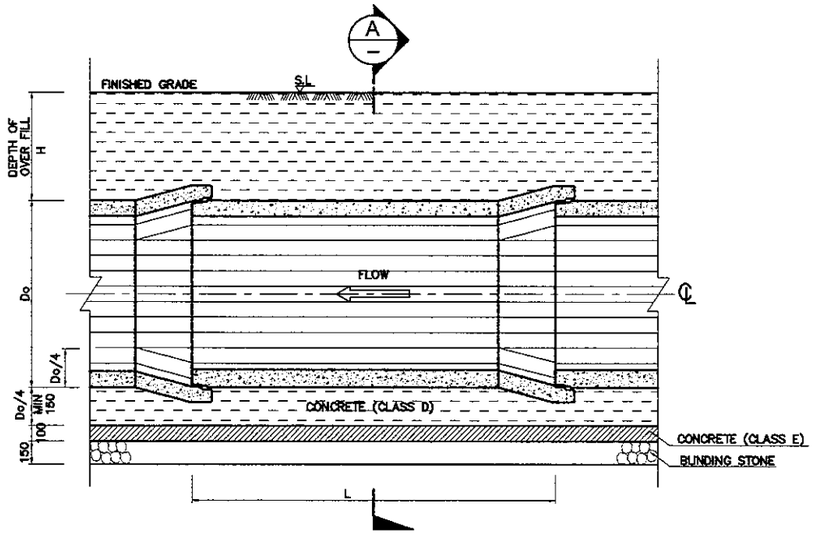

1A SECTION B-B
SCALE 1:10

1 FOUNDATION (RCP TYPE - A)
SCALE 1:10

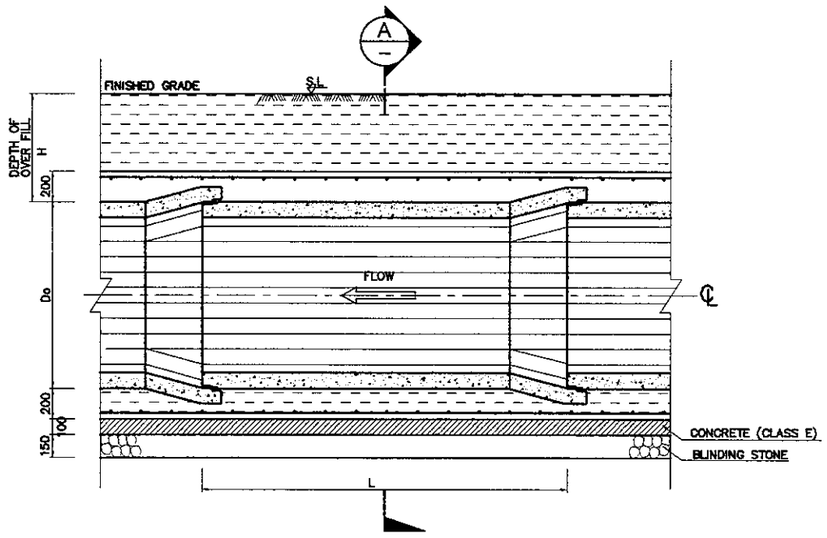

2A SECTION B-B
SCALE 1:10

2 FOUNDATION (RCP TYPE - B)
SCALE 1:10

PIPE DETAILS

DIA D	WALL THICKNESS T	Do	LENGTH L	WEIGHT W	RUBBER RING THICKNESS	REQUIRED STRENGTH CRACKING	REQUIRED STRENGTH BREAKING
mm	mm	mm	mm	kg	mm	KN/m	KN/m
400	55	510	1250	281	12	35.19	58.65
600	70	740	1250/2500	519/965	12	43.07	73.00
800	84	988	2500	1690	15.5	58.40	102.50
1000	108	1216	2500	2638	15.5	75.00	138.00
1200	130	1460	2500	3805	16.5	80.00	160.00
1300	140	1580	2500	4444	18.5	94.20	171.25
1500	160	1820	2500	5858	20	102.20	175.00

DEPTH OF OVER FILL : H

DIMENSION : mm		
D	TYPE - A	TYPE - B
400	500 < H ≤ 3000	300 ≤ H ≤ 500 OR 3000 < H
600	500 < H ≤ 3000	300 ≤ H ≤ 500 OR 3000 < H
800	500 < H ≤ 3000	300 ≤ H ≤ 500 OR 3000 < H
1000	500 < H ≤ 3000	300 ≤ H ≤ 500 OR 3000 < H
1200	600 < H ≤ 3000	300 ≤ H ≤ 600 OR 3000 < H
1300	600 < H ≤ 3000	300 ≤ H ≤ 600 OR 3000 < H
1500	600 < H ≤ 3000	300 ≤ H ≤ 600 OR 3000 < H

NOTES :

1. ALL DIMENSIONS ARE IN MILLIMETERS UNLESS OTHERWISE SHOWN.
2. TYPE OF FOUNDATION IS SHOWN ON THE DRAWING.
3. THE FOUNDATIONS OF TRANSVERSE PIPE CULVERTS SHALL BE TYPE – B IRRESPECTIVE OF PIPE DEPTH.
4. THE CRACKING LOAD MEANS THE LOAD AT WHICH A 0.05 mm WIDE CRACK DEVELOPES ON THE PIPE.
5. BREAKING LOAD MEANS THE MAXIMUM LOAD INDICATED BY THE TESTING MACHINE.
6. THE LOAD P DIVIDED BY THE EFFECTIVE LENGTH L OF PIPE IS GIVEN IN TERMS OF STRENGTH FOR EXTERNAL LOAD.

JICA JAPAN INTERNATIONAL COOPERATION AGENCY / KEI KATAHIRA & ENGINEERS INTERNATIONAL	DESIGNED BY	CHECKED BY	SUBMITTED BY	REPUBLIC OF INDONESIA MINISTRY OF PUBLIC WORKS DIRECTORATE GENERAL OF HIGHWAYS	PROJECT AND LOCATION :	SCALE :	DRAWING TITLE :	DRAWING NO :
	Name: R. UENO	Name: T. OKUMURA	Name: M. KIUCHI		DETAILED DESIGN STUDY OF NORTH JAVA CORRIDOR FLYOVER PROJECT TANGGULANGIN FLYOVER - CONTRACT PACKAGE 3 (PETERONGAN -TANGGULANGIN) EAST JAVA PROVINCE	1 : 40	STANDARD CURB INLET AND MANHOLE (I, II) 1 OF 3	TDG-011
	Sign	Sign	Sign	APPROVED BY: Ir. HERRY VAZA M,Eng.Sc NIP. : 110038400		FULL SIZE A3		SHEET NO : 11 / 19
	Date	Date	Date	Sign / Date				

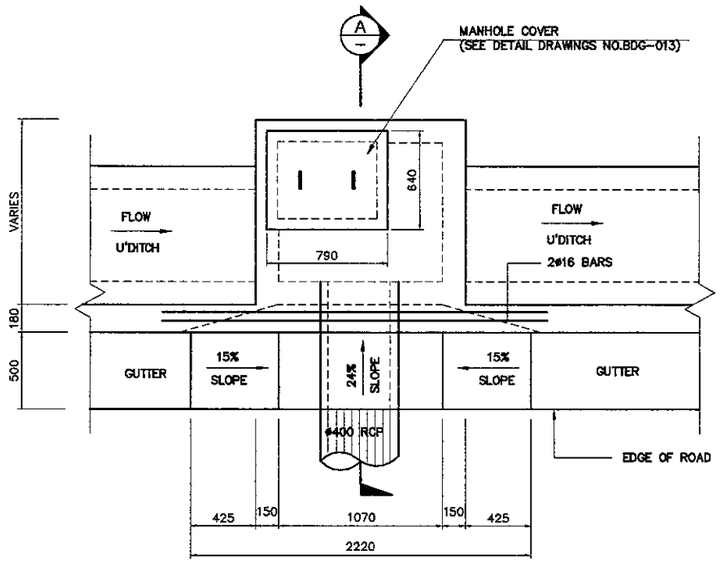

2 PLAN
SCALE 1 : 40

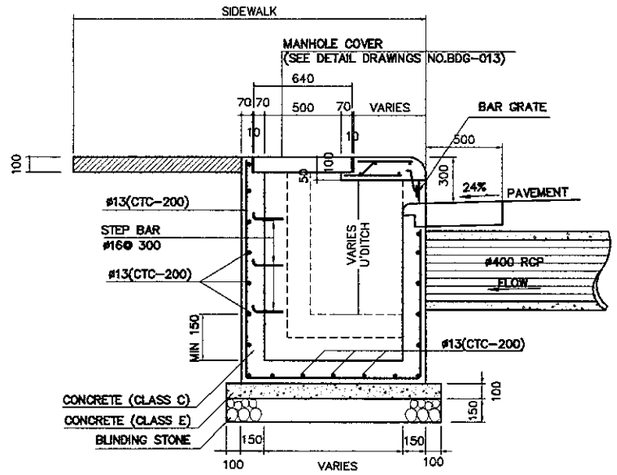

2A SECTION
SCALE 1 : 40

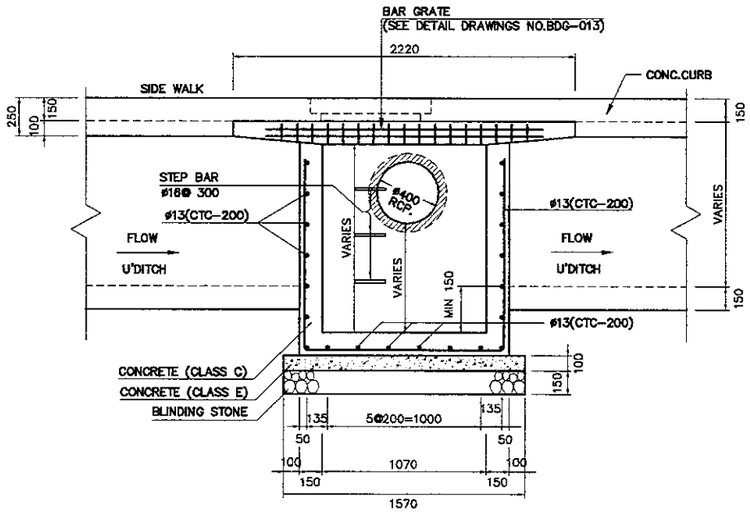

2B FRONT ELEVATION
SCALE 1 : 40

II MANHOLE TYPE - II

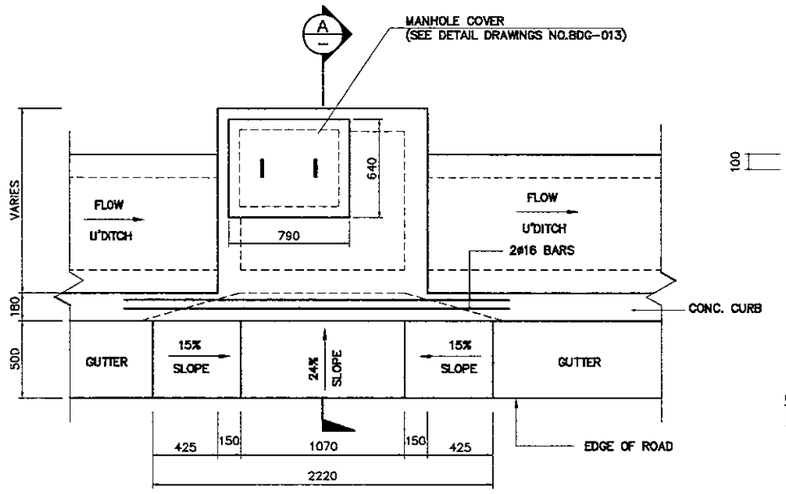

1 PLAN
SCALE 1 : 40

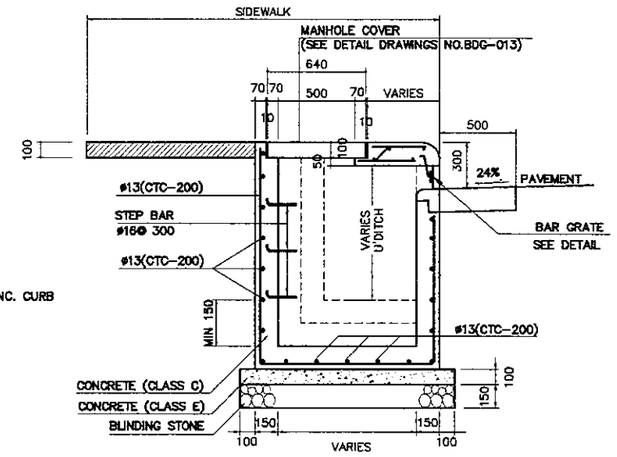

1A SECTION
SCALE 1 : 40

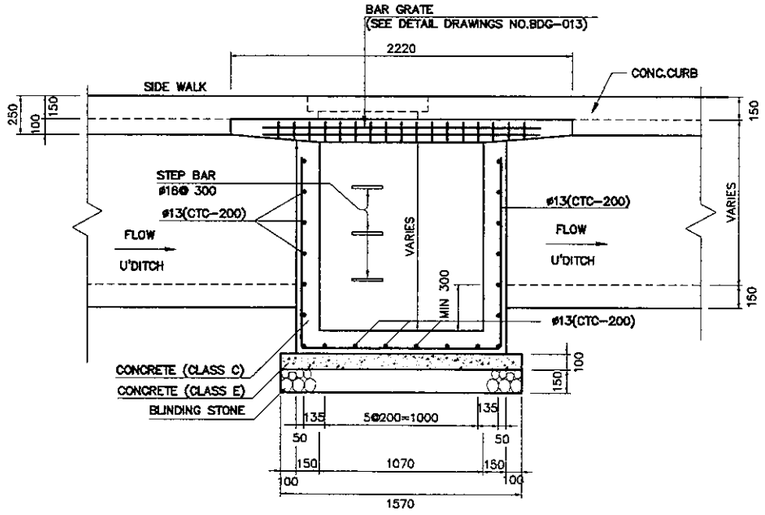

1B FRONT ELEVATION
SCALE 1 : 40

I MANHOLE TYPE - I

JICA JAPAN INTERNATIONAL COOPERATION AGENCY / KEI KATAHIRA & ENGINEERS INTERNATIONAL	DESIGNED BY	CHECKED BY	SUBMITTED BY	REPUBLIC OF INDONESIA MINISTRY OF PUBLIC WORKS DIRECTORATE GENERAL OF HIGHWAYS	PROJECT AND LOCATION :	SCALE :	DRAWING TITLE :	DRAWING NO :
	Name R. UENO	Name T. OKUMURA	Name M. KIUCHI		DETAILED DESIGN STUDY OF NORTH JAVA CORRIDOR FLYOVER PROJECT TANGGULANGIN FLYOVER - CONTRACT PACKAGE 3 (PETERONGAN -TANGGULANGIN) EAST JAVA PROVINCE	1 : 40	STANDARD CURB INLET AND MANHOLE (III, IV) 2 OF 3	TDG-012
	Sign	Sign	Sign	APPROVED BY Ir. HERRY VAZA M,Eng.Sc NIP. : 110038400 Sign		FULL SIZE A3		SHEET NO : 12 / 19
	Date	Date	Date	Date				

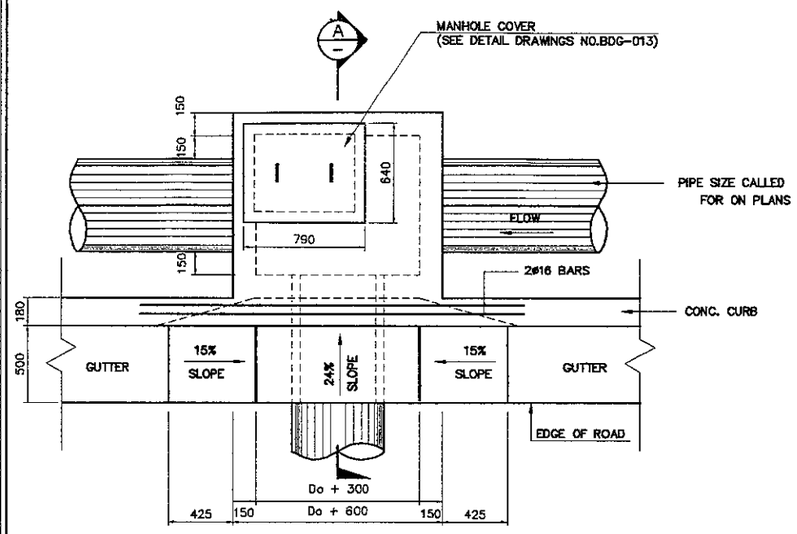

4 PLAN
SCALE 1 : 40

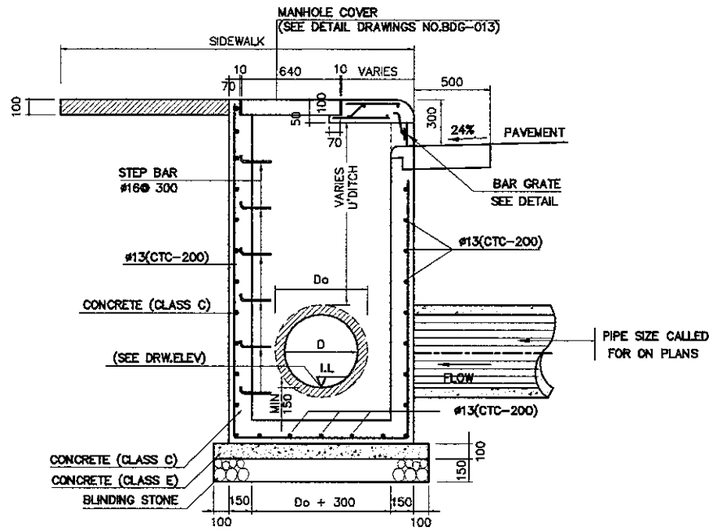

4A SECTION
SCALE 1 : 40

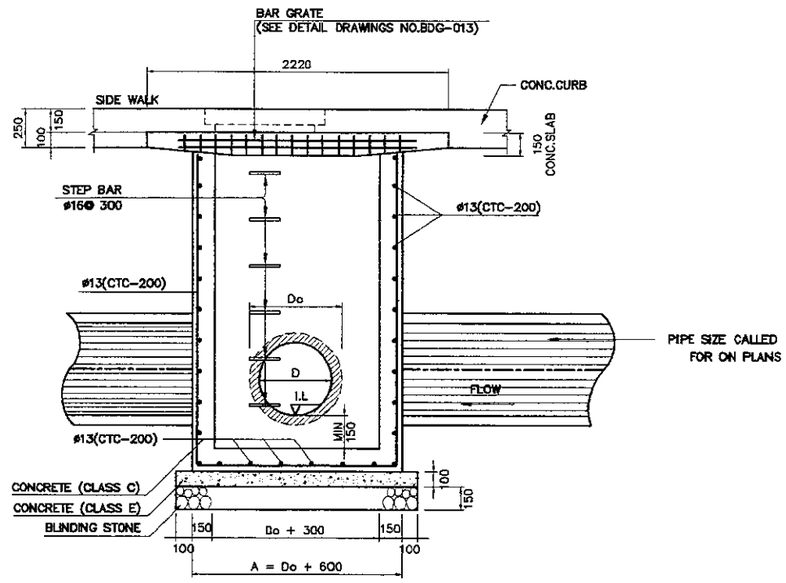

4B FRONT ELEVATION
SCALE 1 : 40

IV MANHOLE TYPE - IV

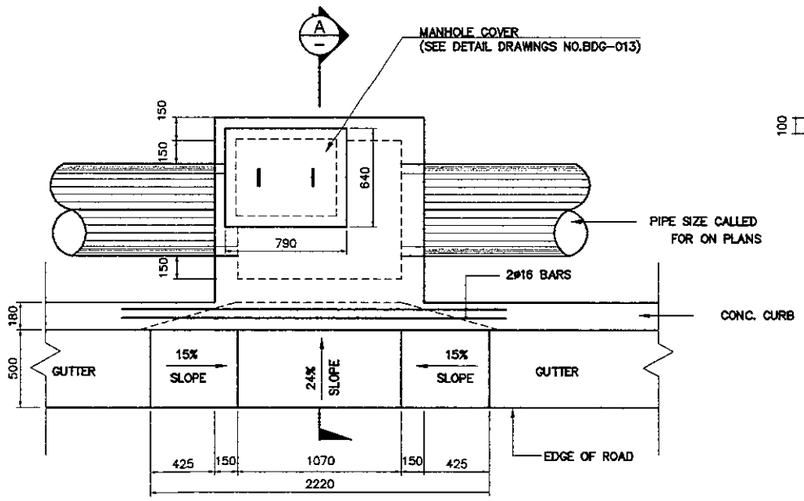

3 PLAN
SCALE 1 : 40

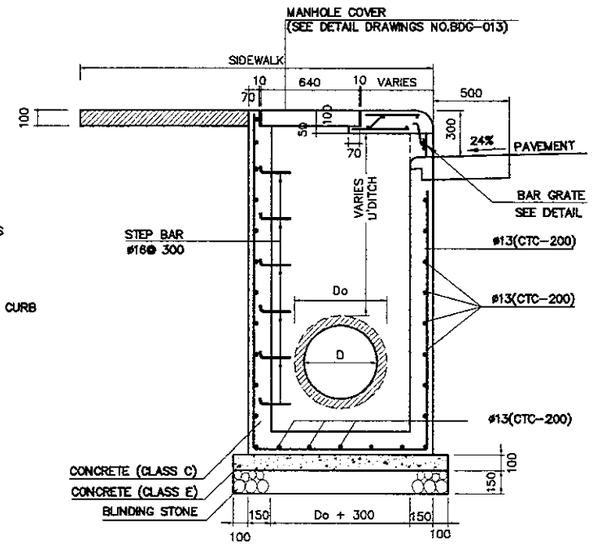

3A SECTION
SCALE 1 : 40

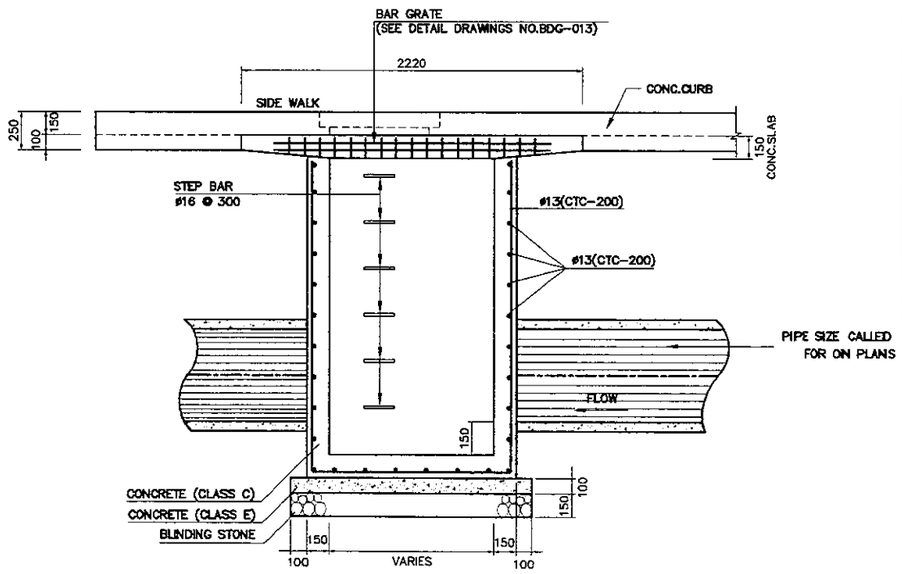

3B FRONT ELEVATION
SCALE 1 : 40

III MANHOLE TYPE - III

JICA JAPAN INTERNATIONAL COOPERATION AGENCY / KEI KATAHIRA & ENGINEERS INTERNATIONAL	DESIGNED BY	CHECKED BY	SUBMITTED BY	REPUBLIC OF INDONESIA MINISTRY OF PUBLIC WORKS DIRECTORATE GENERAL OF HIGHWAYS	PROJECT AND LOCATION :	SCALE :	DRAWING TITLE :	DRAWING NO :
	Name R. UENO	Name T. OKUMURA	Name M. KIUCHI		DETAILED DESIGN STUDY OF NORTH JAVA CORRIDOR FLYOVER PROJECT TANGGULANGIN FLYOVER - CONTRACT PACKAGE 3 (PETERONGAN -TANGGULANGIN) EAST JAVA PROVINCE	1 : 40	STANDARD CURB INLET AND MANHOLE (V, VI) 3 OF 3	TDG-013
	Sign	Sign	Sign	APPROVED BY Ir. HERRY VAZA M,Eng.Sc NIP. : 110038400 Sign		FULL SIZE A3		SHEET NO : 13 / 19
	Date	Date	Date	Date				

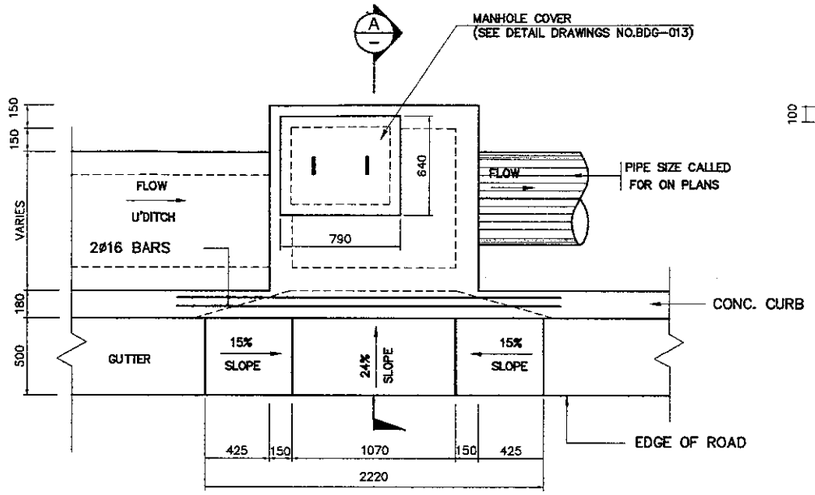

6 - PLAN
SCALE 1 : 40

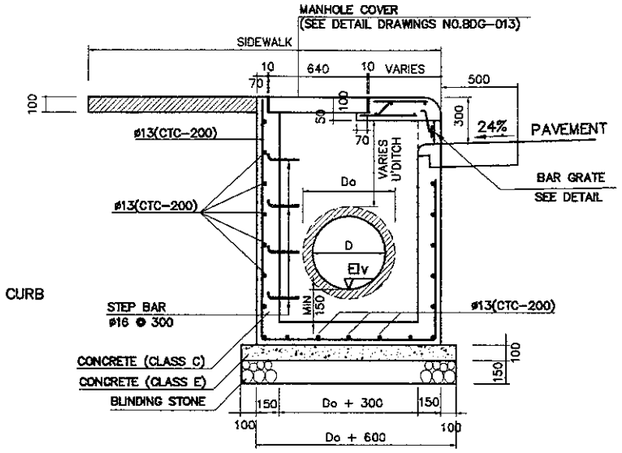

6A - SECTION
SCALE 1 : 40

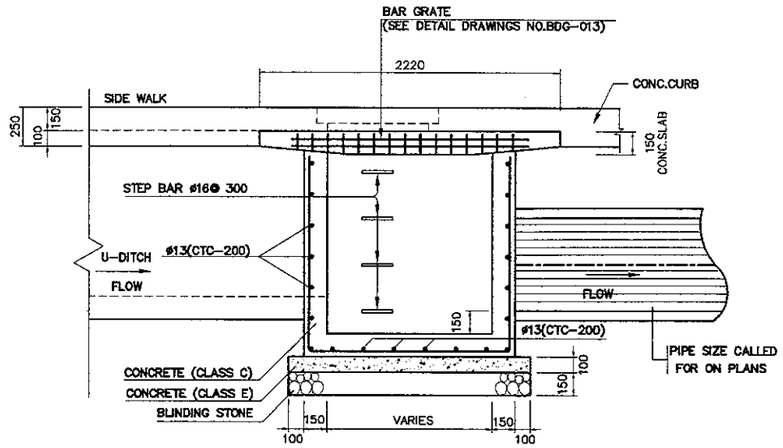

6B - FRONT ELEVATION
SCALE 1 : 40

VI - MANHOLE TYPE - VI

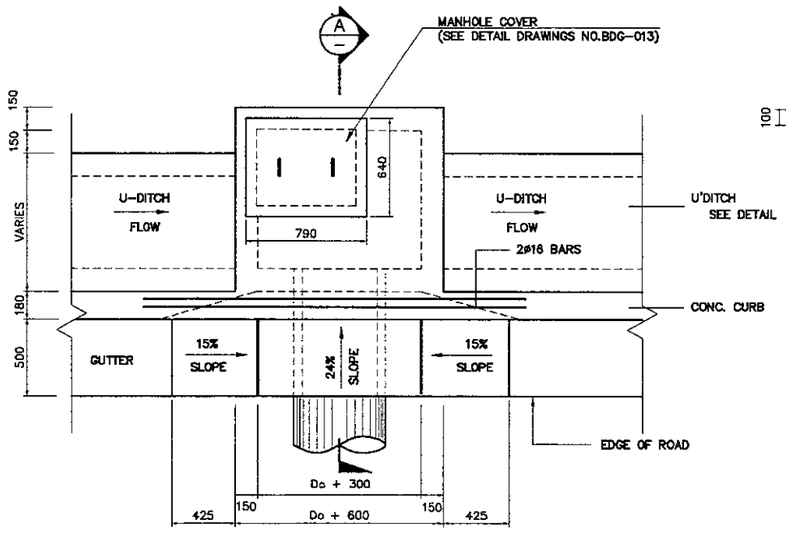

5 - PLAN
SCALE 1 : 40

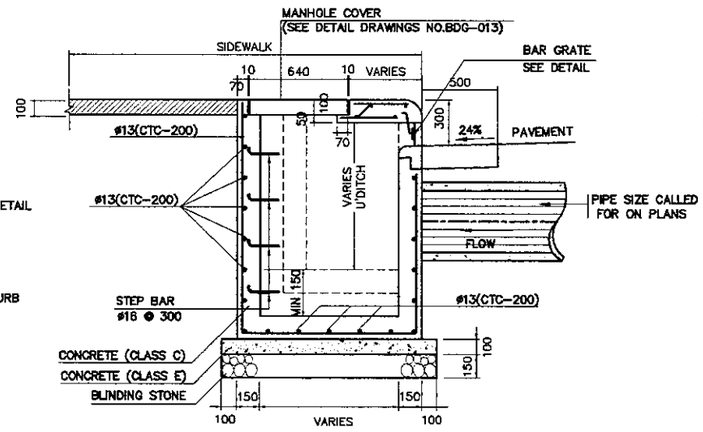

5A - SECTION
SCALE 1 : 40

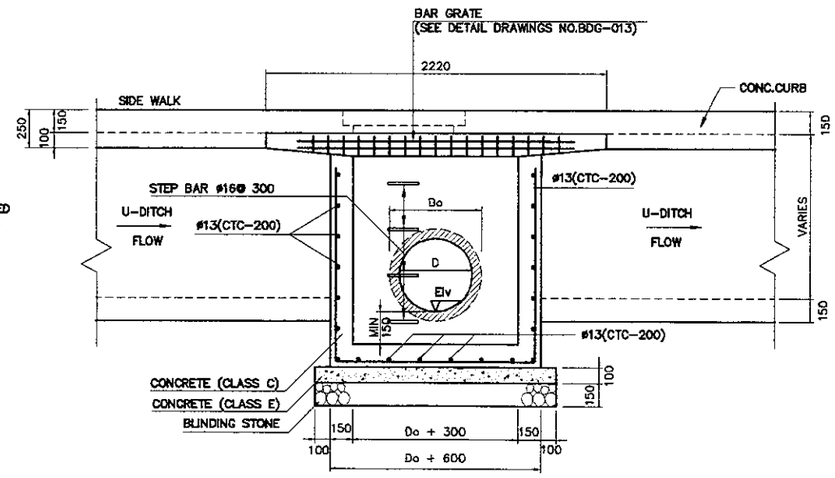

5B - FRONT ELEVATION
SCALE 1 : 40

V - MANHOLE TYPE - V

JAPAN INTERNATIONAL COOPERATION AGENCY KATAHIRA & ENGINEERS INTERNATIONAL	DESIGNED BY	CHECKED BY	SUBMITTED BY	REPUBLIC OF INDONESIA MINISTRY OF PUBLIC WORKS DIRECTORATE GENERAL OF HIGHWAYS	PROJECT AND LOCATION :	SCALE :	DRAWING TITLE :	DRAWING NO :
	Name: R. UENO	Name: T. OKUMURA	Name: M. KIUCHI		DETAILED DESIGN STUDY OF NORTH JAVA CORRIDOR FLYOVER PROJECT TANGGULANGIN FLYOVER - CONTRACT PACKAGE 3 (PETERONGAN -TANGGULANGIN) EAST JAVA PROVINCE	1 : 20 1 : 10	DETAIL OF CURB INLET & COVER MANHOLE	TDG-014
	Sign	Sign	Sign	APPROVED BY: Ir. HERRY VAZA M,Eng.Sc NIP. : 110038400				SHEET NO :
	Date	Date	Date	Sign / Date		FULL SIZE A3		14 / 19

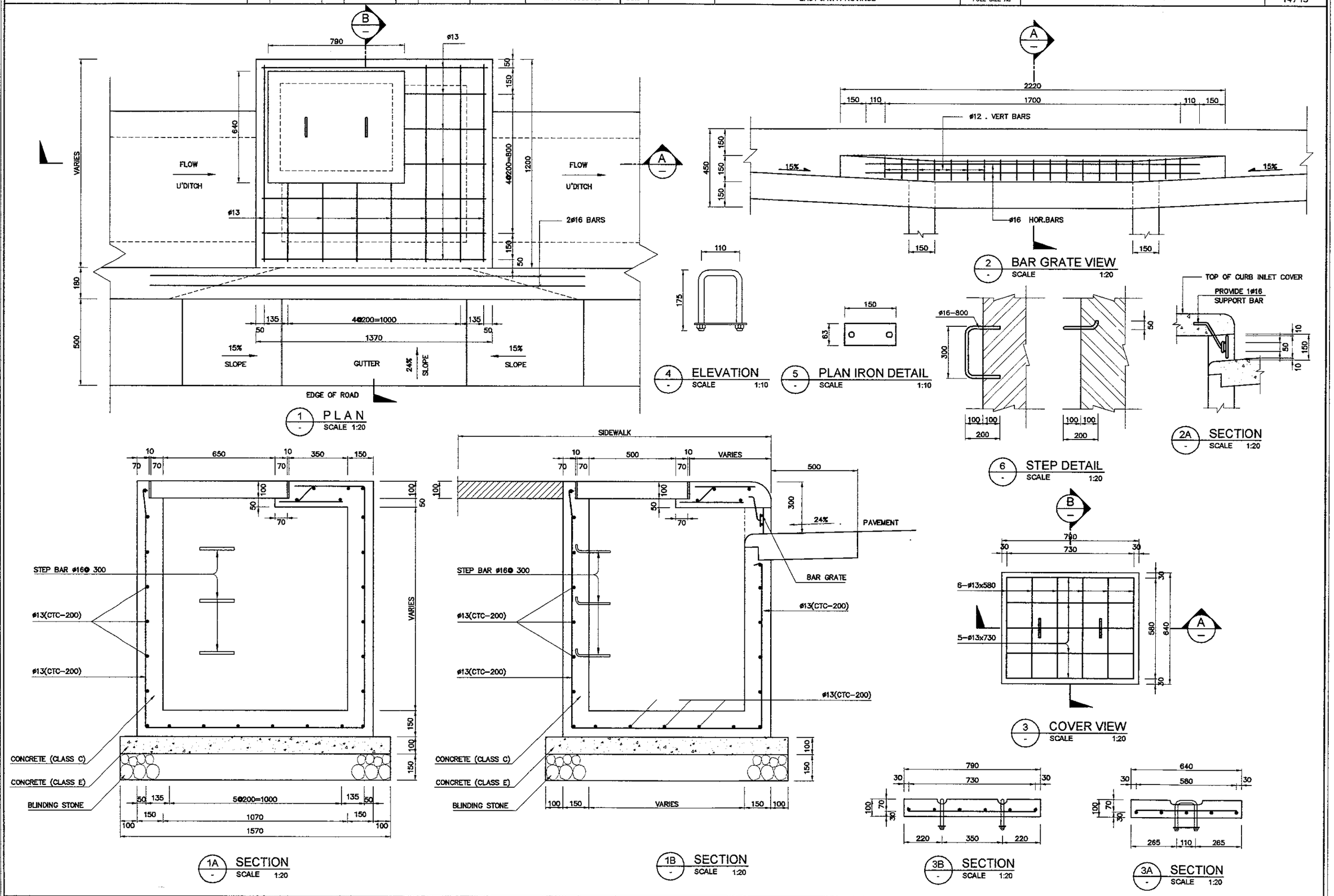

JICA JAPAN INTERNATIONAL COOPERATION AGENCY / KEI KATAHIRA & ENGINEERS INTERNATIONAL	DESIGNED BY	CHECKED BY	SUBMITTED BY	REPUBLIC OF INDONESIA MINISTRY OF PUBLIC WORKS DIRECTORATE GENERAL OF HIGHWAYS	PROJECT AND LOCATION :	SCALE :	DRAWING TITLE :	DRAWING NO :
	Name R. UENO	Name T. OKUMURA	Name M. KIUCHI		DETAILED DESIGN STUDY OF NORTH JAVA CORRIDOR FLYOVER PROJECT TANGGULANGIN FLYOVER - CONTRACT PACKAGE 3 (PETERONGAN -TANGGULANGIN) EAST JAVA PROVINCE	1 : 20	DETAILS OF DRAINAGE DITCHES DS-1, DS-2, DS-3, DS-3A, DS-4 & DS-4A	TDG-015
	Sign	Sign	Sign	APPROVED BY Ir. HERRY VAZA M,Eng.Sc NIP. : 110038400 Sign		FULL SIZE A3		SHEET NO : 15/19
	Date	Date	Date	Date				

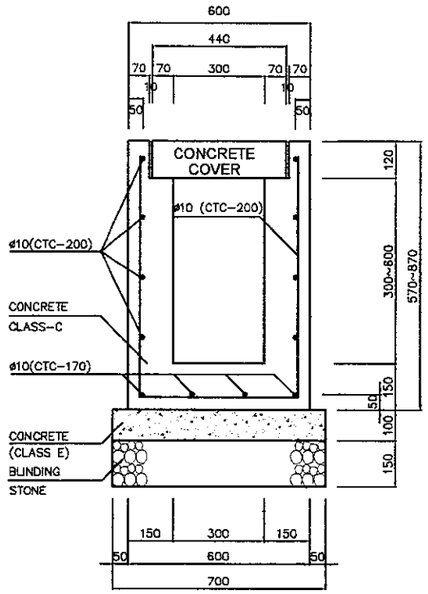

1 - DS - 1
SCALE 1:20

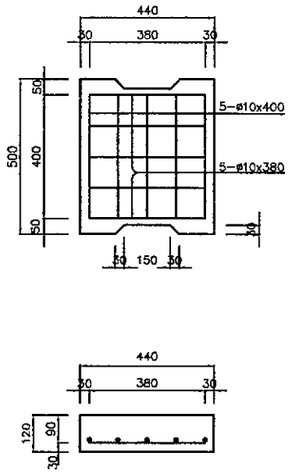

1A - CONCRETE COVER FOR DS-1
SCALE 1:20

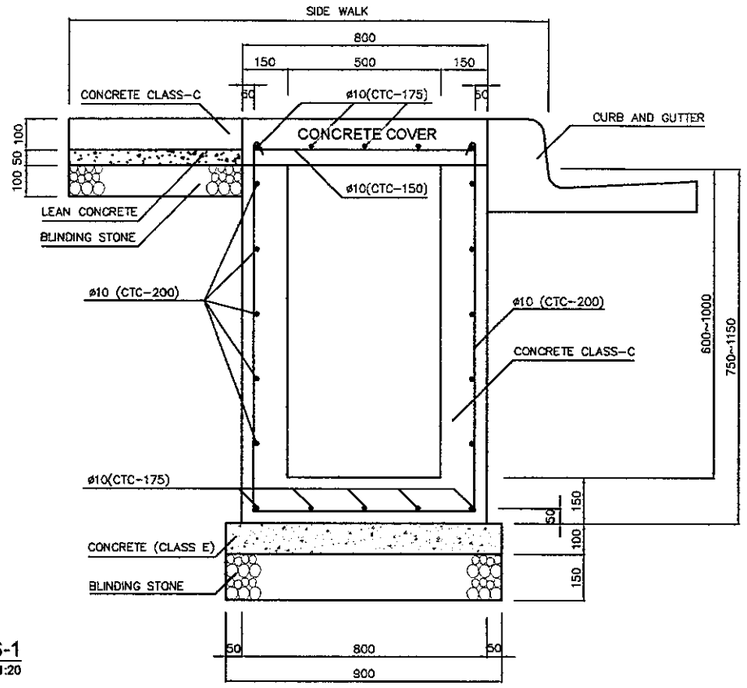

2 - DS - 2
SCALE 1:20

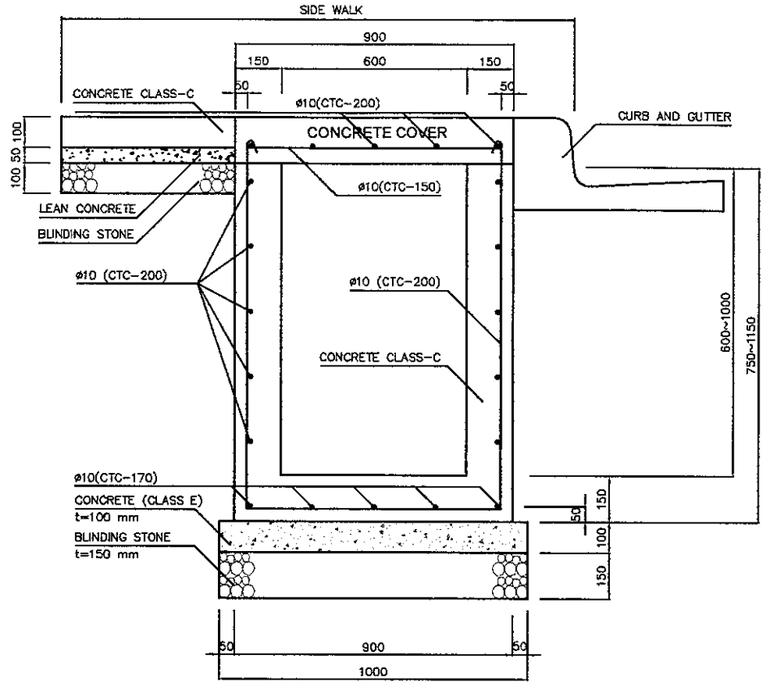

3 - DS - 3
SCALE 1:20

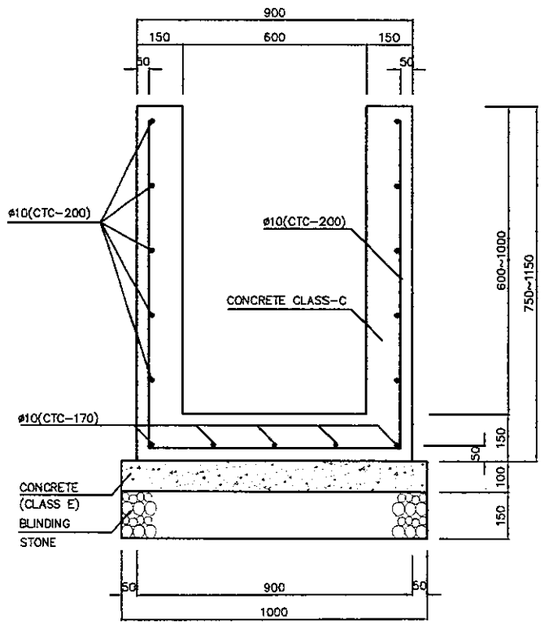

4 - DS - 3A
SCALE 1:20

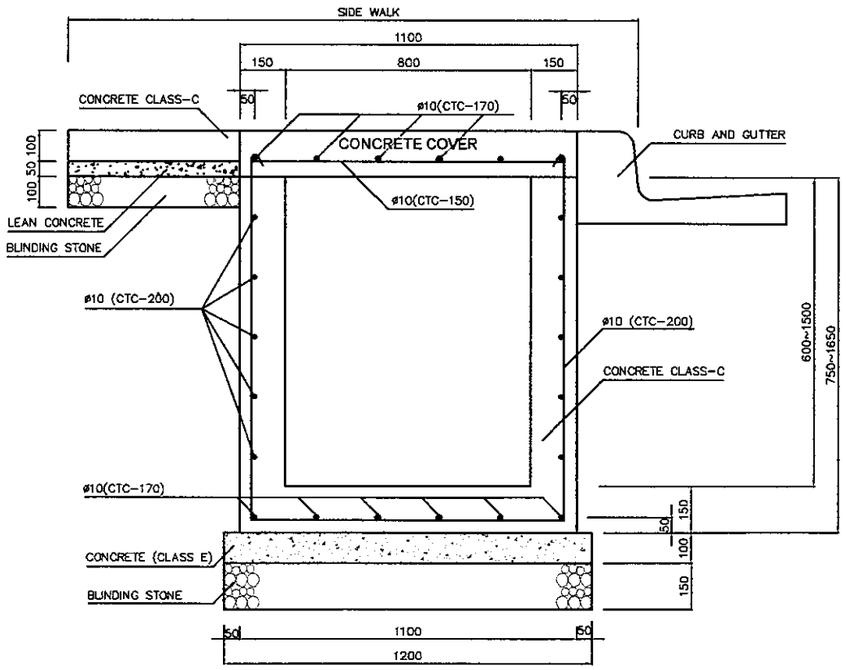

5 - DS - 4
SCALE 1:20

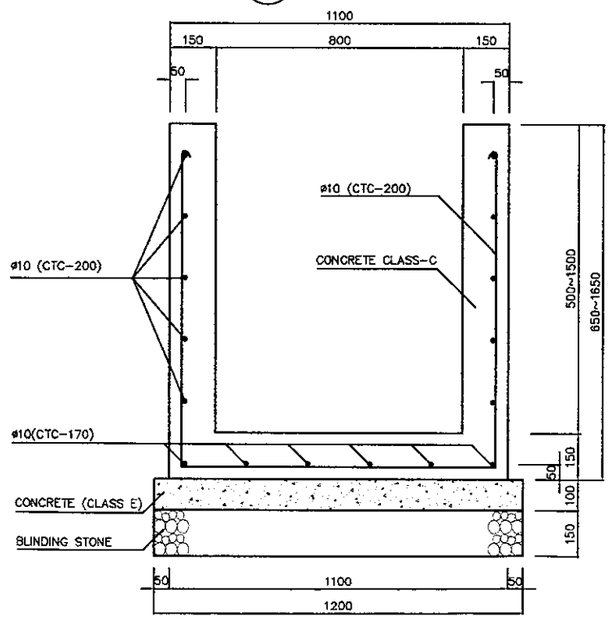

6 - DS - 4A
SCALE 1:20

JAPAN INTERNATIONAL COOPERATION AGENCY KATAHIRA & ENGINEERS INTERNATIONAL	DESIGNED BY	CHECKED BY	SUBMITTED BY	REPUBLIC OF INDONESIA MINISTRY OF PUBLIC WORKS DIRECTORATE GENERAL OF HIGHWAYS	PROJECT AND LOCATION :	SCALE :	DRAWING TITLE :	DRAWING NO :
	Name: R. UENO	Name: T. OKUMURA	Name: M. KIUCHI		DETAILED DESIGN STUDY OF NORTH JAVA CORRIDOR FLYOVER PROJECT TANGGULANGIN FLYOVER - CONTRACT PACKAGE 3 (PETERONGAN -TANGGULANGIN) EAST JAVA PROVINCE	1 : 25	DETAILS OF DRAINAGE MORTAL STONE WORK TYPE I, II,III & BOX CULVERT	TDG-016
	Sign	Sign	Sign	APPROVED BY: Ir. HERRY VAZA M,Eng.Sc NIP. : 110038400		FULL SIZE A3		SHEET NO : 16 / 19
	Date	Date	Date	Sign / Date				

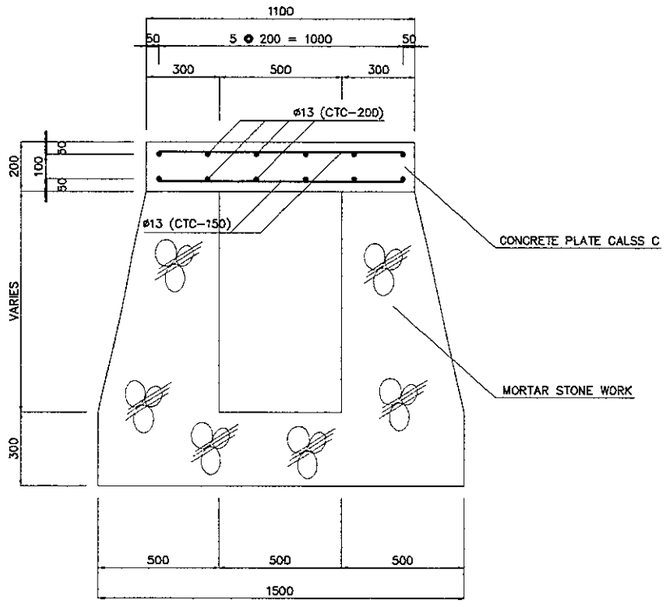

1 MORTAR STONE WORK TYPE - I
SCALE 1:25

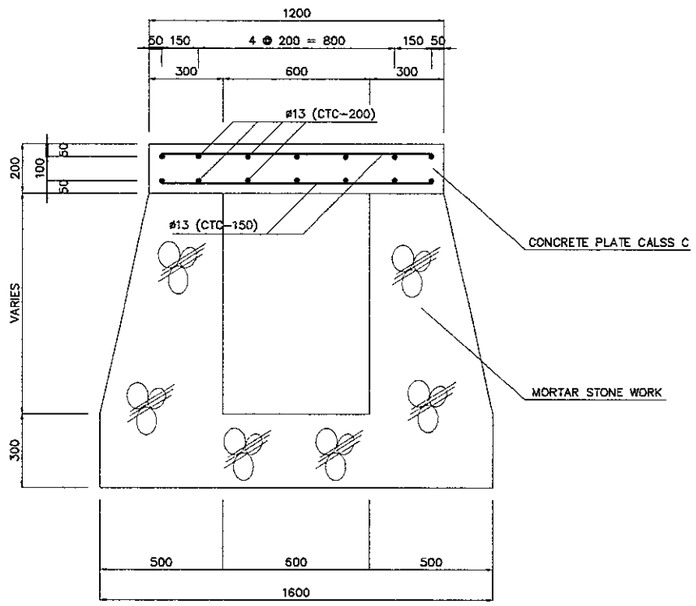

2 MORTAR STONE WORK TYPE - II
SCALE 1:25

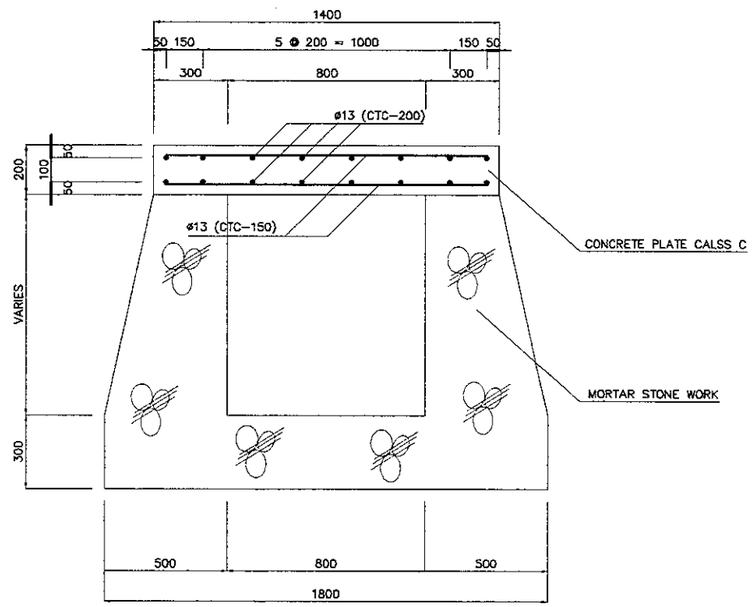

3 MORTAR STONE WORK TYPE - III
SCALE 1:25

JICA JAPAN INTERNATIONAL COOPERATION AGENCY / KEI KATAHIRA & ENGINEERS INTERNATIONAL	DESIGNED BY	CHECKED BY	SUBMITTED BY	REPUBLIC OF INDONESIA MINISTRY OF PUBLIC WORKS DIRECTORATE GENERAL OF HIGHWAYS	PROJECT AND LOCATION :	SCALE :	DRAWING TITLE :	DRAWING NO :
	Name R. UENO	Name T. OKUMURA	Name M. KIUCHI		DETAILED DESIGN STUDY OF NORTH JAVA CORRIDOR FLYOVER PROJECT TANGGULANGIN FLYOVER - CONTRACT PACKAGE 3 (PETERONGAN -TANGGULANGIN) EAST JAVA PROVINCE	1:20 N T S	TRENCHING AND BEDDING DETAILS FOR CUT AREAS	TDG-017
	Sign	Sign	Sign	APPROVED BY Ir. HERRY VAZA M,Eng.Sc NIP. : 110038400 Sign		FULL SIZE A3		SHEET NO : 17/19
	Date	Date	Date	Date				

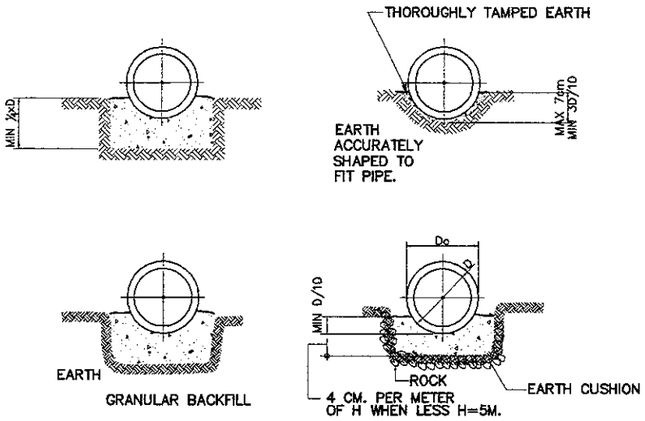

ORDINARY BEDDING

1 TYPICAL BEDDING FOR PROJECTING CONDUITS
SCALE NTS

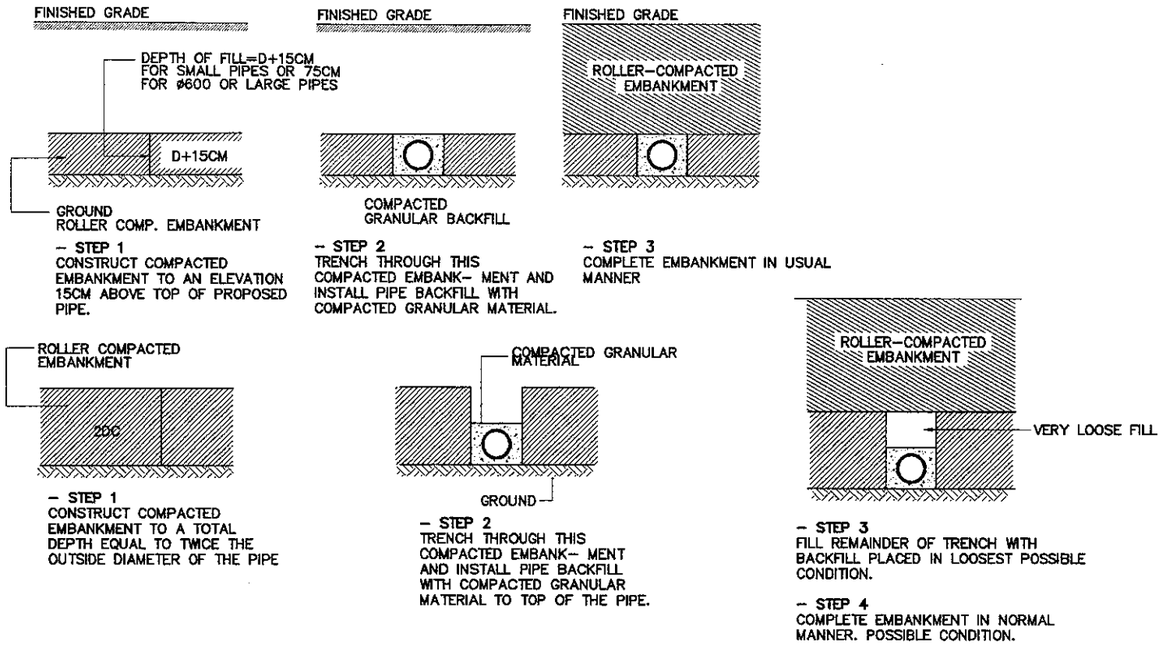

2 METHODS OF PIPE INSTALLATION FOR FILL AREAS
SCALE NTS

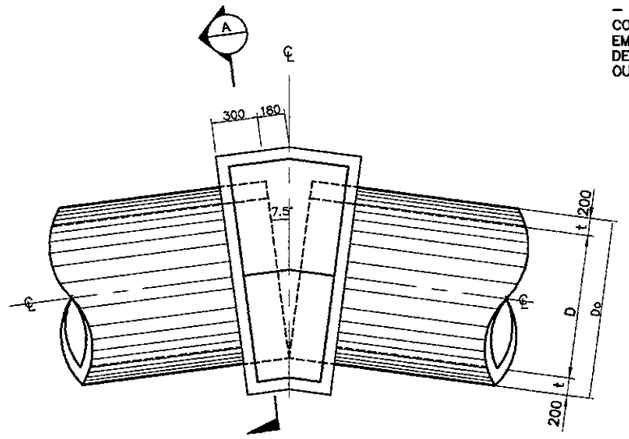

3 PLAN
SCALE 1:20

STANDARD CONCRETE PIPE COLLAR		
PIPE DIAMETER (MM.)	CONCRETE (CU.M.)	REBARS (KG.)
460	0.493	8.5
610	0.656	10.0
760	0.842	11.0
910	1.056	12.5
1070	1.314	16.5
1220	1.586	19.0
1370	1.914	20.8
1520	2.241	22.5

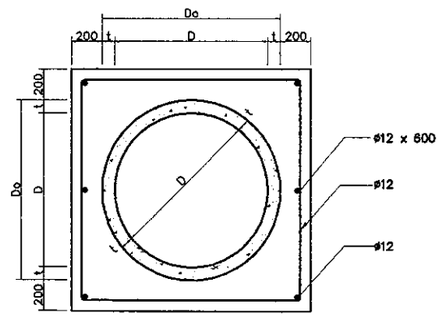

3A SECTION
SCALE 1:20

3 PIPE COLLAR AT BEND DETAILS
SCALE 1:20

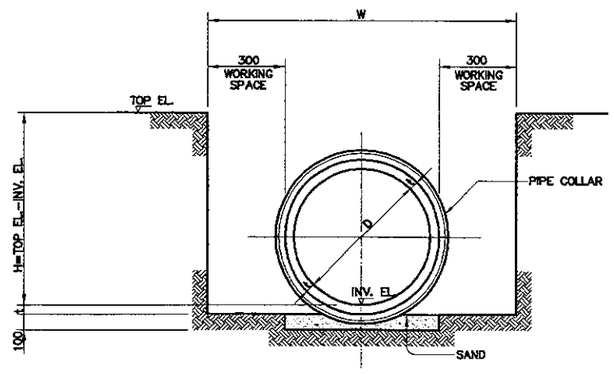

4 FRONT VIEW
SCALE 1:20

NOTES:

1. ALL DIMENSIONS SHOWN ON THIS PLAN ARE IN MILLIMETER UNITS OTHERWISE INDICATED.
2. D = INTERNAL DIAMETER.

4 TRENCHING AND BEDDING DETAILS FOR CUT AREAS
SCALE 1:20

JAPAN INTERNATIONAL COOPERATION AGENCY KATAHIRA & ENGINEERS INTERNATIONAL	DESIGNED BY	CHECKED BY	SUBMITTED BY	REPUBLIC OF INDONESIA MINISTRY OF PUBLIC WORKS DIRECTORATE GENERAL OF HIGHWAYS	PROJECT AND LOCATION :	SCALE :	DRAWING TITLE :	DRAWING NO :
	Name: R. UENO	Name: T. OKUMURA	Name: M. KIUCHI		DETAILED DESIGN STUDY OF NORTH JAVA CORRIDOR FLYOVER PROJECT TANGGULANGIN FLYOVER - CONTRACT PACKAGE 3 (PETERONGAN -TANGGULANGIN) EAST JAVA PROVINCE	AS SHOWN	PLAN AND FRONT VIEW DETAIL OF BOX CULVERT	TDG-018
	Sign	Sign	Sign	APPROVED BY: Ir. HERRY VAZA M,Eng.Sc NIP. : 110038400				SHEET NO :
	Date	Date	Date	Sign / Date		FULL SIZE A3		18 / 19

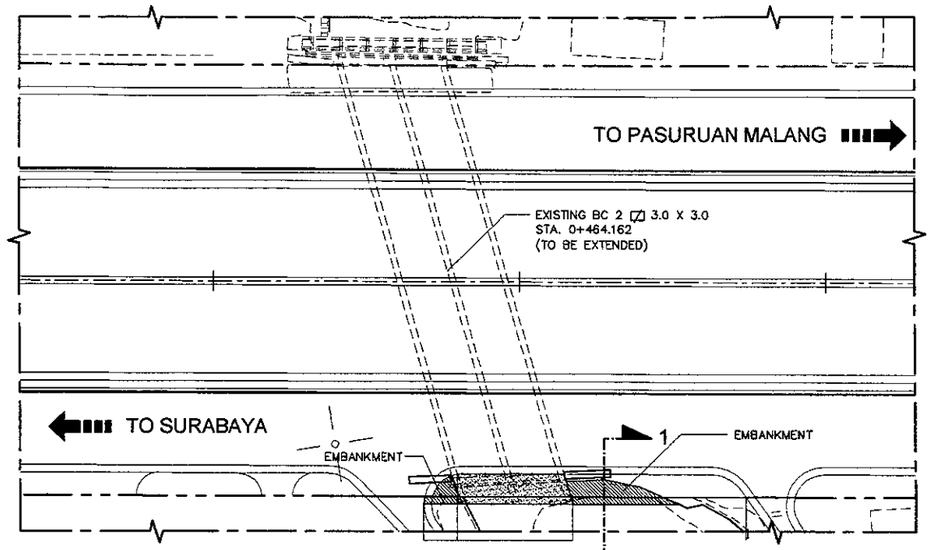

1 PLAN
SCALE 1 : 400

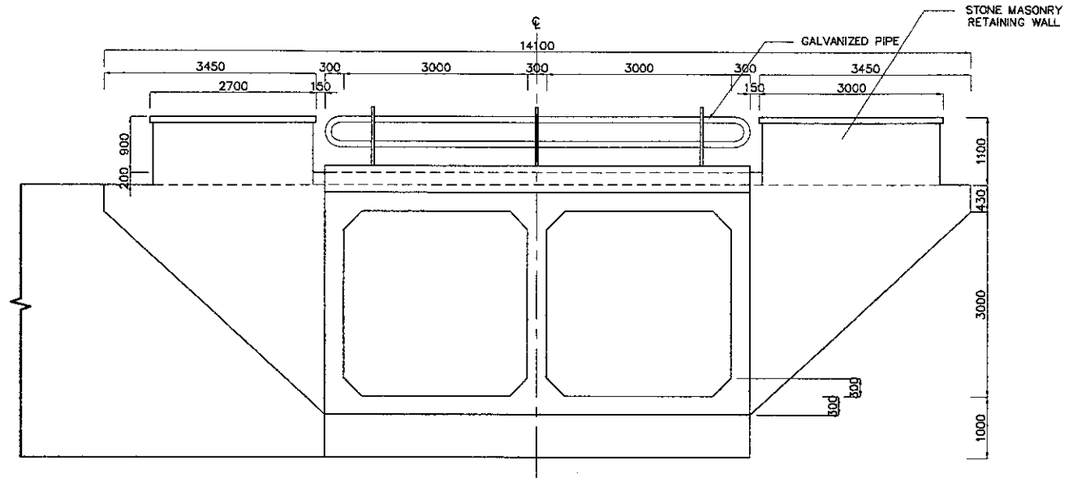

2 ELEVATION
SCALE 1 : 100

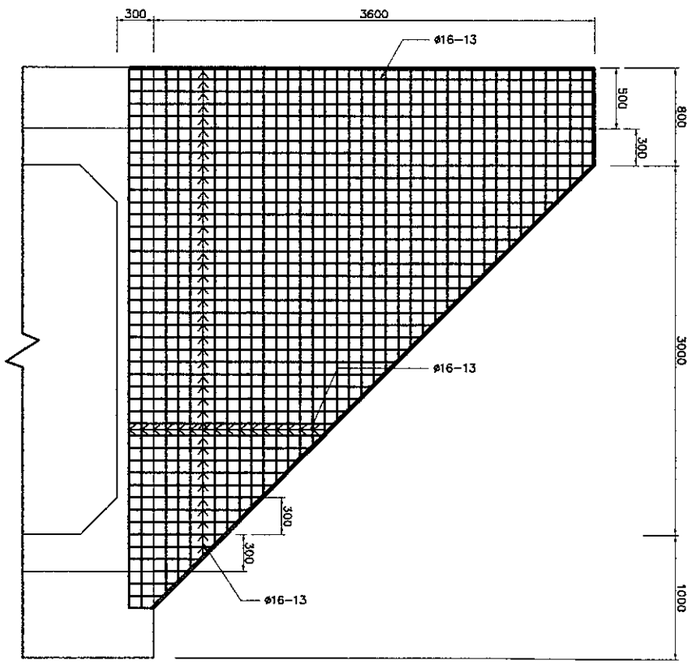

3 DETAIL REIFORCEMENT EDGE WALL
SCALE 1 : 50

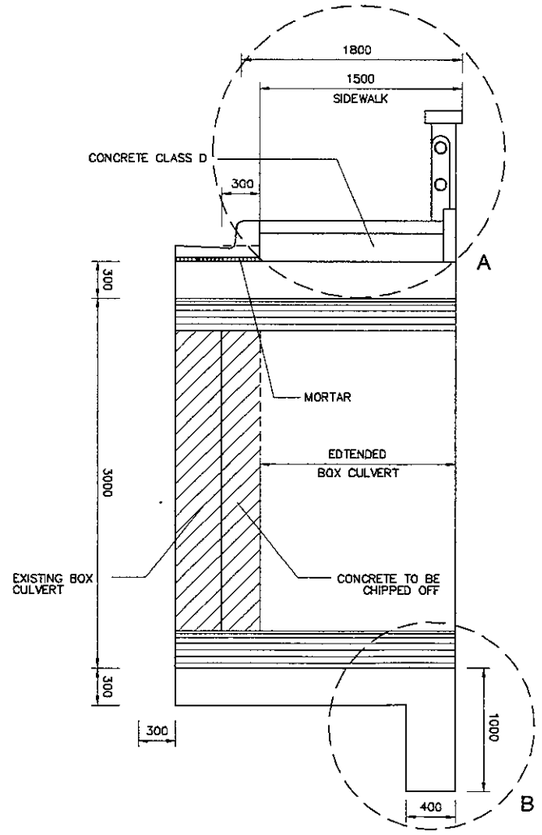

4 CROSS SECTION 1 - 1
SCALE 1 : 50

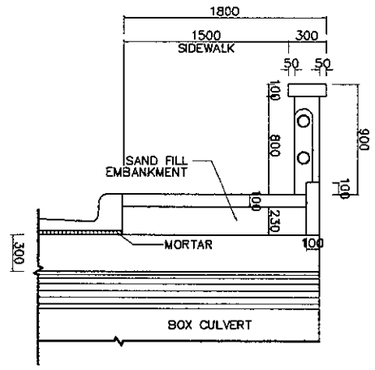

5 DETAIL - A
SCALE 1 : 50

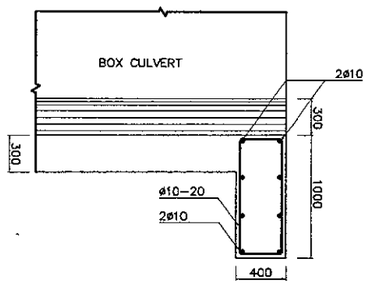

6 DETAIL - B
SCALE 1 : 50

JICA JAPAN INTERNATIONAL COOPERATION AGENCY / KEI KATAHIRA & ENGINEERS INTERNATIONAL	DESIGNED BY	CHECKED BY	SUBMITTED BY	REPUBLIC OF INDONESIA MINISTRY OF PUBLIC WORKS DIRECTORATE GENERAL OF HIGHWAYS	PROJECT AND LOCATION :	SCALE :	DRAWING TITLE :	DRAWING NO :
	Name: R. UENO	Name: T. OKUMURA	Name: M. KIUCHI		DETAILED DESIGN STUDY OF NORTH JAVA CORRIDOR FLYOVER PROJECT TANGGULANGIN FLYOVER - CONTRACT PACKAGE 3 (PETERONGAN -TANGGULANGIN) EAST JAVA PROVINCE	AS SHOWN	REIFORCED CONCRETE BOX CULVERT	TDG-019
	Sign	Sign	Sign	APPROVED BY: Ir. HERRY VAZA M,Eng.Sc NIP. : 110038400				SHEET NO :
	Date	Date	Date	Sign / Date		FULL SIZE A3		19 / 19

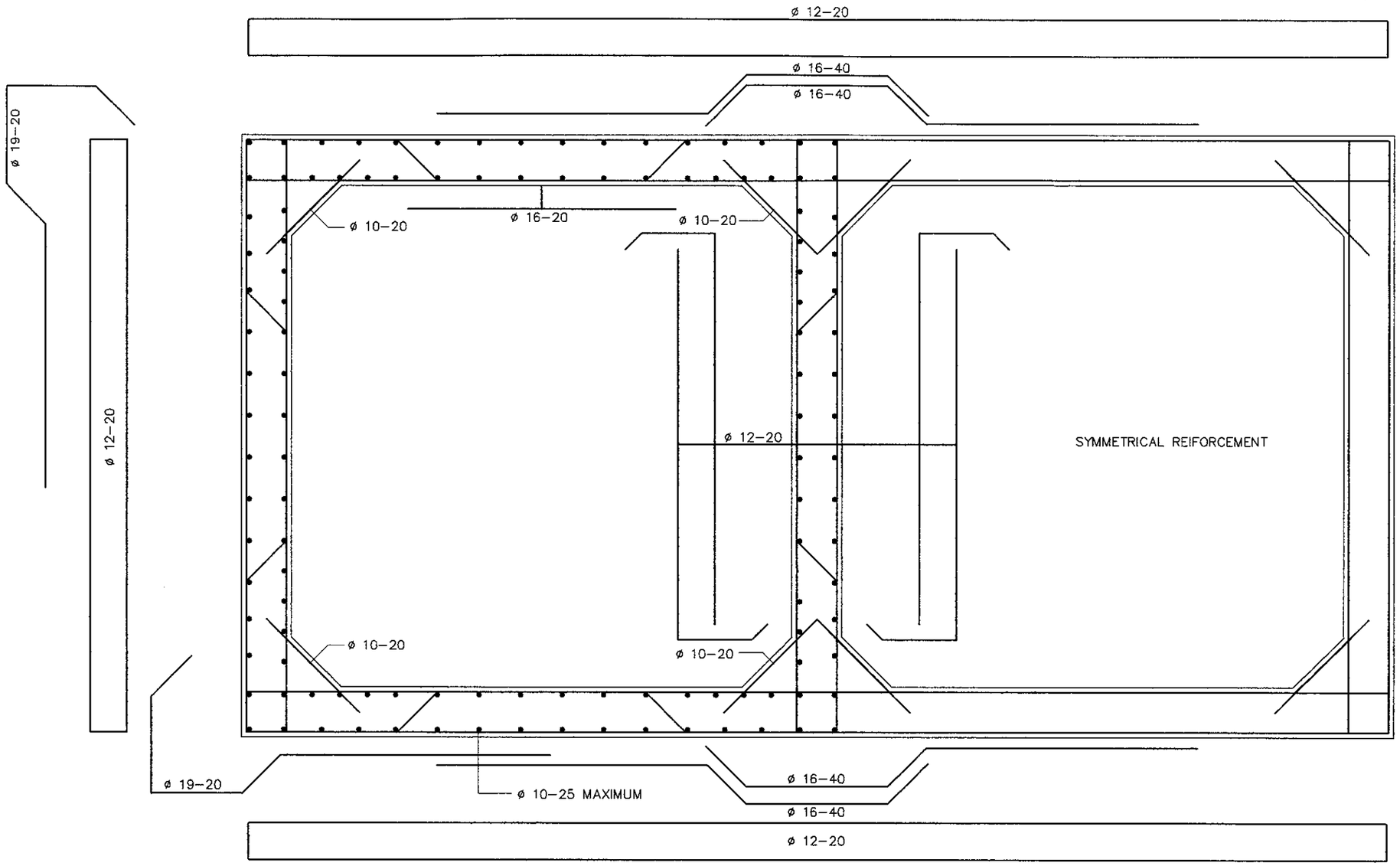

1 - REINFORCEMENT DETAIL
SCALE 1 : 40

REINFORCEMENT BAR ARRAGEMENT DOUBLE BOX CULVERT PER M LENGTH

STRUCTURE	TYPE	Ø (MM)	LENGTH (CM) a	b	c	d	TOTAL LENGTH (CM)	NUMBER	UNIT WEIGHT (KG/M)	WEIGHT (KG)
BOX CULVERT	A	19	72	72	189	34	401	20	2.23	179
	B	12	24	354			756	10	0.89	67
	C	12	684	24			718	20	0.89	128
	D	16	222	384		34	674	10	1.56	106
	E	12	126	354		34	126	20	0.89	22
	F	16	213				213	20	1.56	67
	G	10	100				100	204	0.62	126
	H	10	79				158	40	0.62	39
WING WALL (1 EACH)	A	16	74 s.d 410	20			188 s.d 860	30	1.56	245
	B	16	0 s.d 364				0 s.d 788	33	1.56	203
RETAINING WALL BELOW	A	10	36	92			256	18	0.62	28
	B	10	354				354	8	0.62	17

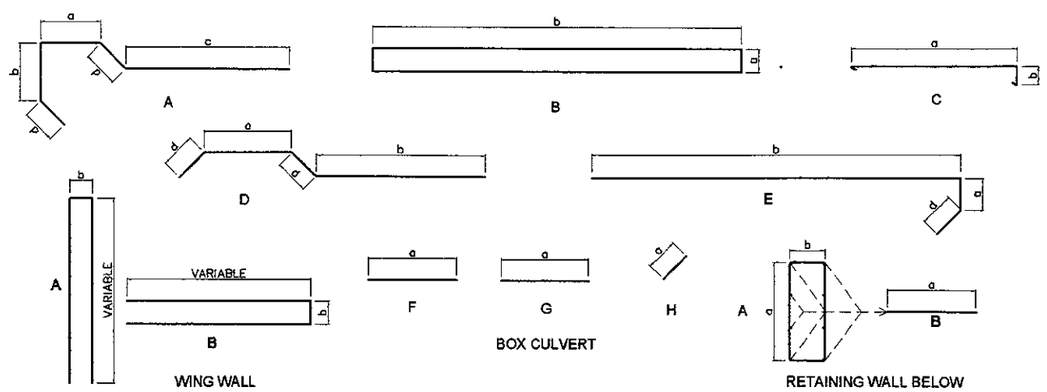

JAPAN INTERNATIONAL COOPERATION AGENCY KATAHIRA & ENGINEERS INTERNATIONAL	DESIGNED BY		CHECKED BY		SUBMITTED BY		REPUBLIC OF INDONESIA MINISTRY OF PUBLIC WORKS DIRECTORATE GENERAL OF HIGHWAYS			PROJECT AND LOCATION :	SCALE :	DRAWING TITLE :	DRAWING NO :
	Name	R. UENO	Name	T. OKUMURA	Name	M. KIUCHI				DETAILED DESIGN STUDY OF NORTH JAVA CORRIDOR FLYOVER PROJECT TANGGULANGIN FLYOVER - CONTRACT PACKAGE 3 (PETERONGAN -TANGGULANGIN) EAST JAVA PROVINCE	NTS	DRAINAGE SCHEDULE AT FLYOVER	TDV-001
	Sign		Sign		Sign		APPROVED BY	Ir. HERRY VAZA M.Eng.Sc	Sign				SHEET NO :
	Date		Date		Date			NIP. : 110038400	Date		FULL SIZE A3		01 / 31

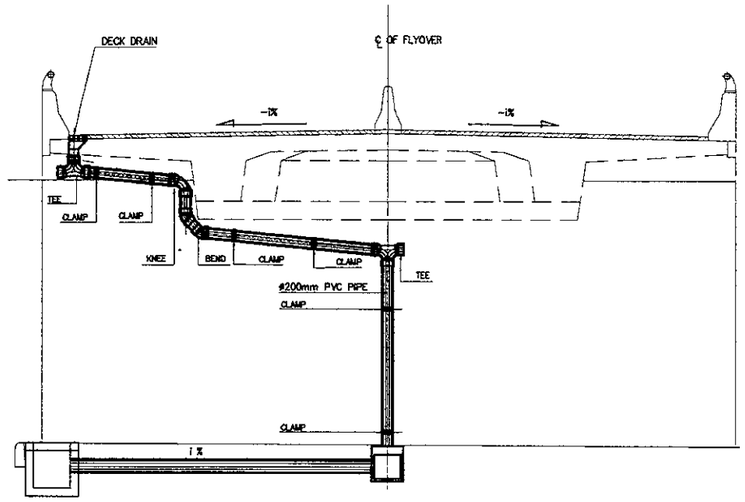

1 / - FRONT VIEW OF ABUTMENT
NTS

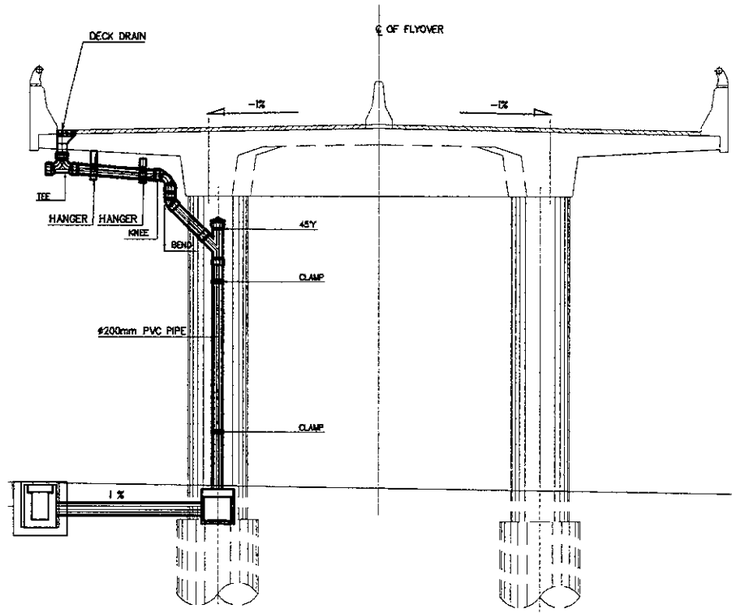

1 / - FRONT VIEW OF PC SECTION
NTS

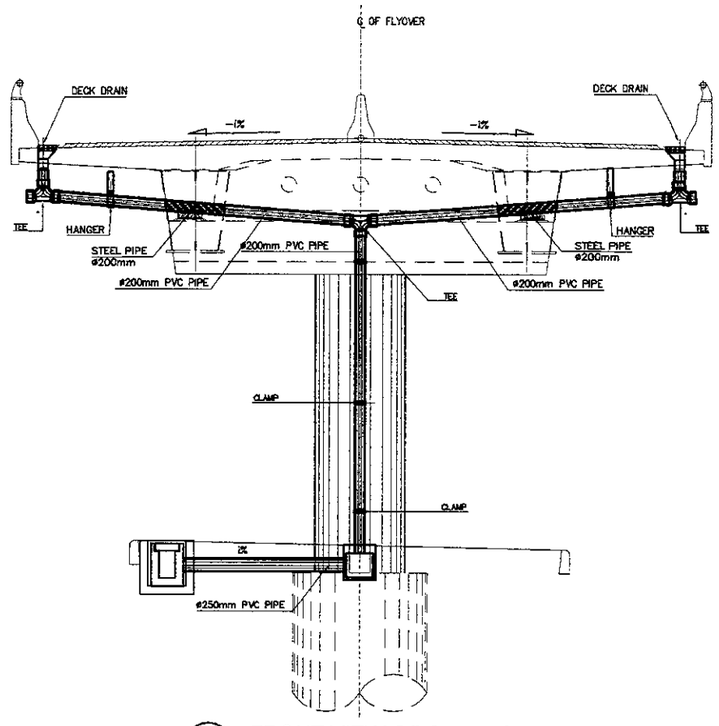

1 / - FRONT VIEW OF STEEL SECTION
NTS

DRAINAGE SCHEDULE

BRIDGE TYPE	ABUTMENT/PIER NO	STATION LIMIT	LEFT SIDE: APPLIED HORIZONTAL DRAIN: TYPE OF DRAIN	LEFT SIDE: APPLIED HORIZONTAL DRAIN: LENGHT (m)	LEFT SIDE: DECK DRAIN TYPE II	RIGHT SIDE: DECK DRAIN TYPE II	RIGHT SIDE: APPLIED HORIZONTAL DRAIN: LENGHT (m)	RIGHT SIDE: APPLIED HORIZONTAL DRAIN: TYPE OF DRAIN	PIPE ø200mm (m)	ACCESSORIES: BEND (unit)	ACCESSORIES: TEE (unit)	ACCESSORIES: KNEE (unit)	ACCESSORIES: 45°Y (unit)	ACCESSORIES: CLEAN OUT (unit)
PC	A1	0+542.00	NONE	NONE	NONE	1	NONE	NONE	6.6	0	1	1	0	1
	P1	0+562.00				1			6.7	1	1	1	1	2
	P2	0+582.00				1			8.4	1	1	1	1	2
STEEL	P3	0+607.00	NONE	NONE	NONE	1	25.00	Surface down & Outer Gutter	13.5	0	2	0	0	2
	P4	0+623.00	Surface down & Outer Gutter	25.00		NONE	NONE	NONE	–	0	0	0	0	0
	P5	0+657.00		25.00			NONE	NONE	–	0	0	0	0	0
	P6	0+682.00	NONE	NONE	1		NONE	NONE	13.4	0	2	0	0	2
PC	P7	0+702.00	NONE	NONE	1	NONE	NONE	NONE	8.2	1	1	1	1	2
	P8	0+722.00			1				7.4	1	1	1	1	2
	A2	0+742.00			1				8.7	2	2	1	0	2

APPROACH 1

STA	DECK DRAIN TYPE II	POSITION: LEFT	POSITION: RIGHT	PIPE: SIZE (ø,mm)	PIPE: LENGHT (m)	ACCESSORIES: KNEE (unit)	ACCESSORIES: TEE 250X200 (unit)
0+402.00	DD-1L/DD-1R	1	1	200	0.76	2	2
0+422.00	DD-2L/DD-2R	1	1	200	1.50	2	2
0+442.00	DD-3L/DD-3R	1	1	200	2.72	2	2
0+462.00	DD-4L/DD-4R	1	1	200	3.05	2	0
0+482.00	DD-5L/DD-5R	1	1	200	5.14	2	0
0+502.00	DD-6L/DD-6R	1	1	200	7.43	2	0
0+522.00	DD-7R	NONE	1	200	4.80	1	0

APPROACH 2

STA	DECK DRAIN TYPE II	POSITION: LEFT	POSITION: RIGHT	PIPE: SIZE (ø,mm)	PIPE: LENGHT (m)	ACCESSORIES: KNEE (unit)	ACCESSORIES: TEE 250X200 (unit)
0+762.00	DD-7L/DD-7R	1	1	200	9.94	2	0
0+782.00	DD-6L/DD-6R	1	1	200	7.98	2	0
0+802.00	DD-5L/DD-5R	1	1	200	5.97	2	0
0+822.00	DD-4L	1	1	200	1.98	1	0
0+842.00	DD-3L	1	1	200	0.98	1	0
0+862.00	DD-2L	1	1	200	0.51	1	1
0+882.00	DD-1L	1	1	200	0.16	1	1

JAPAN INTERNATIONAL COOPERATION AGENCY / KATAHIRA & ENGINEERS INTERNATIONAL	DESIGNED BY	CHECKED BY	SUBMITTED BY	REPUBLIC OF INDONESIA MINISTRY OF PUBLIC WORKS DIRECTORATE GENERAL OF HIGHWAYS	PROJECT AND LOCATION :	SCALE :	DRAWING TITLE :	DRAWING NO :
	Name: R. UENO	Name: T. OKUMURA	Name: M. KIUCHI		DETAILED DESIGN STUDY OF NORTH JAVA CORRIDOR FLYOVER PROJECT TANGGULANGIN FLYOVER - CONTRACT PACKAGE 3 (PETERONGAN -TANGGULANGIN) EAST JAVA PROVINCE	NTS	DRAINAGE SCHEDULE UNDER FLYOVER	TDV-002
	Sign	Sign	Sign	APPROVED BY: Ir. HERRY VAZA M,Eng.Sc				SHEET NO :
	Date	Date	Date	NIP. : 110038400 / Sign / Date		FULL SIZE A3		02 / 31

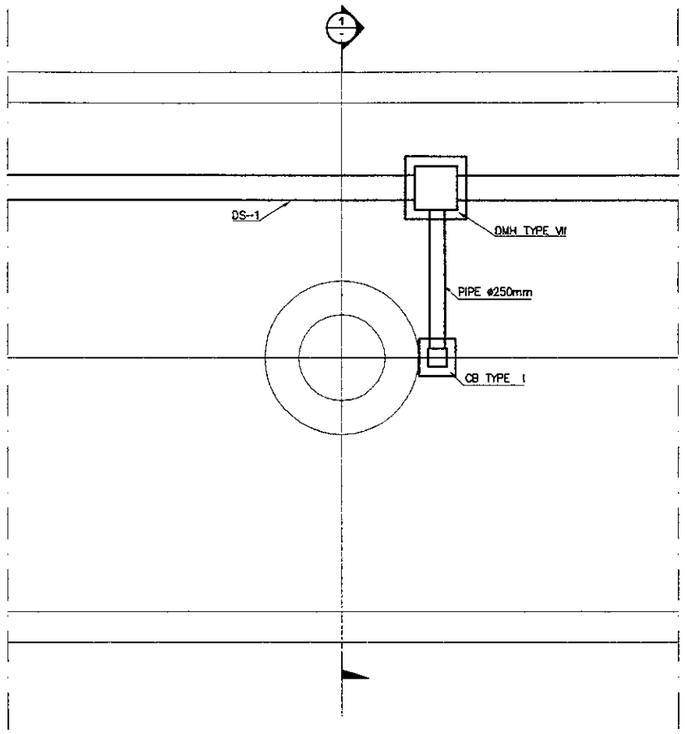

1 PLAN
NOT TO SCALE

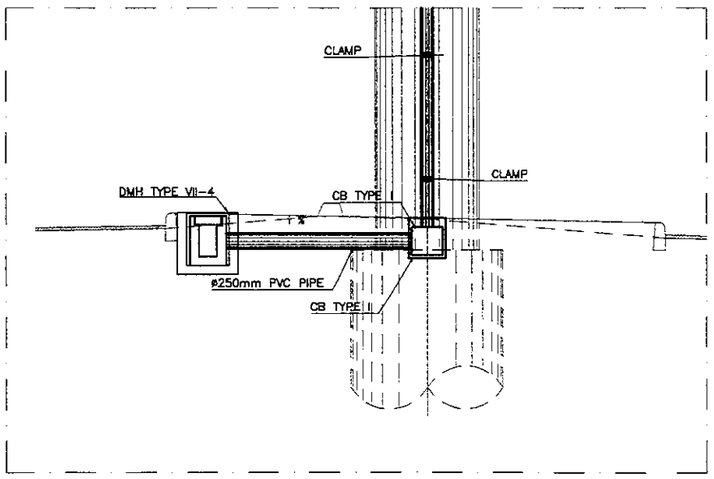

2 SECTION 1-1
NOT TO SCALE

DRAINAGE SCHEDULE

FROM MH	TO MH	LOCATION	LENGTH (m)	U'DITCH/PIPE SLOPE(%)	INVERT ELEV. (m) UPSTREAM	INVERT ELEV. (m) DOWNSTREAM	REMARKS
CB TYPE I-2	DMH TYPE VII-2	P1-P1	3	2.00	3.547	3.487	PIPE ø250
DMH TYPE VII-2	DMH TYPE VII-1	P1-A1	19	2.00	3.487	3.107	U'DITCH DS 1
CB TYPE I-1	DMH TYPE VII-1	A1-A1	3	0.50	3.141	3.107	PIPE ø250
DMH TYPE VII-1	DMH-15	A1-A1	6	2.00	3.107	2.997	RCP ø600 (B)
CB TYPE I-4	DMH TYPE VII-4	P3-P3	0.8	1.00	3.212	3.202	PIPE ø250
DMH TYPE VII-4	DMH TYPE VII-3	P3-P2	24.4	0.50	3.202	3.080	U'DITCH DS 1
CB TYPE I-3	DMH TYPE VII-3	P2-P2	7.5	2.00	3.172	3.080	PIPE ø250
DMH TYPE VII-3	DMH-66	P2-P2	6.6	2.00	3.080	3.070	RCP ø600 (B)
CB TYPE I-5	DMH TYPE VII-5	P6-P6	4.2	2.00	2.977	2.893	PIPE ø250
DMH TYPE VII-5	DMH TYPE VII-6	P6-P7	19.8	3.00	2.893	2.299	U'DITCH DS 1
CB TYPE I-6	DMH TYPE VII-6	P7-P7	7.1	4.00	2.583	2.299	PIPE ø250
DMH TYPE VII-6	DMH-22	P7-P7	6.7	2.00	2.299	2.189	RCP ø600 (B)
CB TYPE I-7	DMH TYPE VII-7	P8-P8	8.6	3.00	3.024	2.766	PIPE ø250
DMH TYPE VII-7	DMH TYPE VII-8	P8-A2	17.3	2.00	2.766	2.420	U'DITCH DS 1
CB TYPE I-8	DMH TYPE VII-8	A2-A2	6.3	3.00	2.609	2.420	PIPE ø250
DMH TYPE VII-8	DMH-24	A2-A2	6.2	2.00	2.420	2.310	RCP ø600 (B)

DRAINAGE ALONG APPROACH LEFT SIDE

FROM STA/MH	TO STA/MH	TYPE OF U'DITCH/PIPE	LENGTH (m)	U'DITCH/PIPE SLOPE(%)
0+502.00	0+482.00	U'DITCH DS 5	20	0.30
0+482.00	0+462.00	U'DITCH DS 5	20	0.30
0+462.00	0+442.00	U'DITCH DS 5	20	0.30
0+442.00	0+422.00	PIPE ø250	20	0.30
0+422.00	0+402.00	PIPE ø250	20	0.30
0+402.00	DMH VIII-1	PIPE ø250	22	0.30
DMH VIII-1	DMH-57	RCP ø600 (B)	6.6	0.50

FROM STA/MH	TO STA/MH	TYPE OF U'DITCH/PIPE	LENGTH (m)	U'DITCH/PIPE SLOPE(%)
0+762.00	0+782.00	U'DITCH DS 5	20	0.30
0+782.00	0+802.00	U'DITCH DS 5	20	0.30
0+802.00	0+822.00	U'DITCH DS 5	20	0.30
0+822.00	0+842.00	U'DITCH DS 5	20	0.30
0+842.00	0+862.00	U'DITCH DS 5	20	0.30
0+862.00	0+882.00	PIPE ø250	20	0.30
0+882.00	DMH VIII-2	PIPE ø250	28	0.30
DMH VIII-2	DMH-92	RCP ø600 (B)	6.6	0.50

DRAINAGE ALONG APPROACH RIGHT SIDE

FROM STA/MH	TO STA/MH	TYPE OF U'DITCH/PIPE	LENGTH (m)	U'DITCH/PIPE SLOPE(%)
0+522.00	0+502.00	U'DITCH DS 5	20	0.30
0+502.00	0+482.00	U'DITCH DS 5	20	0.30
0+482.00	0+462.00	U'DITCH DS 5	20	0.30
0+462.00	0+442.00	U'DITCH DS 5	20	0.30
0+442.00	0+422.00	PIPE ø250	20	0.30
0+422.00	0+402.00	PIPE ø250	20	0.30
0+402.00	DMH VIII-1	PIPE ø250	22	0.30
DMH VIII-1	DMH-07	RCP ø600 (B)	6.6	0.50

FROM STA/MH	TO STA/MH	TYPE OF U'DITCH/PIPE	LENGTH (m)	U'DITCH/PIPE SLOPE(%)
0+762.00	0+782.00	U'DITCH DS 5	20	0.30
0+782.00	0+802.00	U'DITCH DS 5	20	0.30
0+802.00	0+822.00	U'DITCH DS 5	20	0.30
0+822.00	0+842.00	U'DITCH DS 5	20	0.30
0+842.00	0+862.00	U'DITCH DS 5	20	0.30
0+862.00	0+882.00	PIPE ø250	20	0.30
0+882.00	DMH VIII-2	PIPE ø250	28	0.30
DMH VIII-2	DMH-36	RCP ø600 (B)	6.6	0.50

JAPAN INTERNATIONAL COOPERATION AGENCY KATAHIRA & ENGINEERS INTERNATIONAL	DESIGNED BY	CHECKED BY	SUBMITTED BY	REPUBLIC OF INDONESIA MINISTRY OF PUBLIC WORKS DIRECTORATE GENERAL OF HIGHWAYS	PROJECT AND LOCATION :	SCALE :	DRAWING TITLE :	DRAWING NO :
	Name R. UENO	Name T. OKUMURA	Name N. KIUCHI		DETAILED DESIGN STUDY OF NORTH JAVA CORRIDOR FLYOVER PROJECT TANGGULANGIN FLYOVER - CONTRACT PACKAGE 3 (PETERONGAN -TANGGULANGIN) EAST JAVA PROVINCE	1 : 200	DRAINAGE LAYOUT AND ELEVATION AT VIADUCT 1 OF 4	TDV-003
	Sign	Sign	Sign	APPROVED BY Ir. HERRY VAZA M,Eng.Sc NIP. : 110038400 Sign				SHEET NO :
	Date	Date	Date	Date		FULL SIZE A3		03 / 31

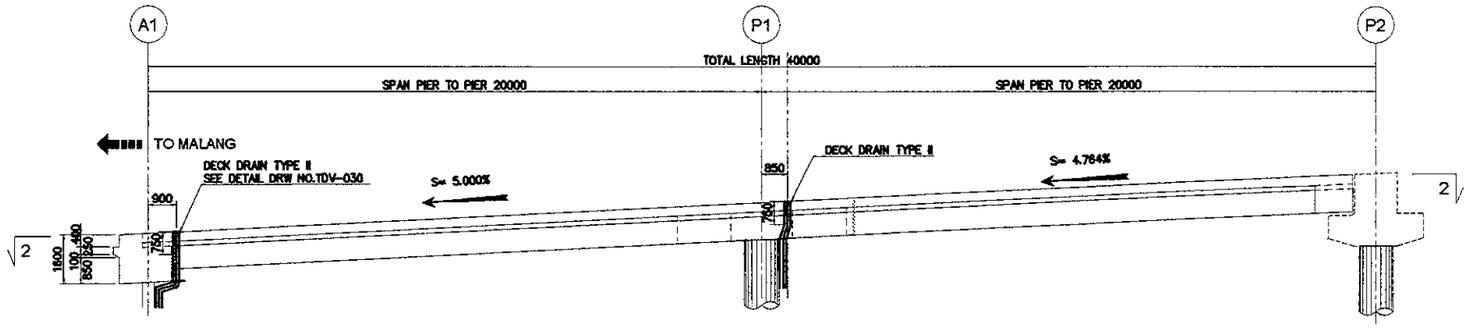

1 SECTION 1-1
SCALE : 1 : 200

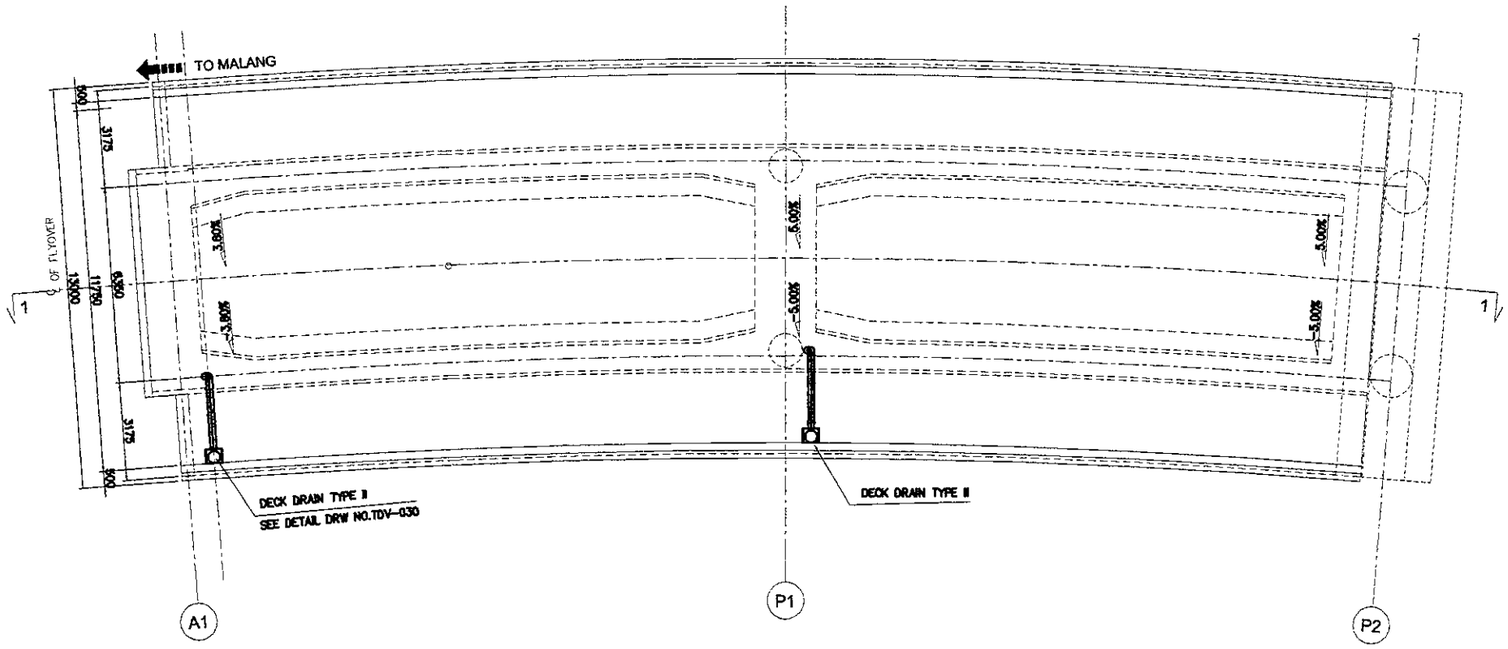

2 SECTION 2-2
SCALE : 1 : 200

JICA JAPAN INTERNATIONAL COOPERATION AGENCY / KEI KATAHIRA & ENGINEERS INTERNATIONAL	DESIGNED BY: Name R. UENO, Sign, Date	CHECKED BY: Name T. OKUMURA, Sign, Date	SUBMITTED BY: Name M. KIUCHI, Sign, Date	REPUBLIC OF INDONESIA MINISTRY OF PUBLIC WORKS DIRECTORATE GENERAL OF HIGHWAYS	APPROVED BY: Ir. HERRY VAZA M,Eng.Sc, NIP. : 110038400, Sign, Date	PROJECT AND LOCATION : DETAILED DESIGN STUDY OF NORTH JAVA CORRIDOR FLYOVER PROJECT TANGGULANGIN FLYOVER - CONTRACT PACKAGE 3 (PETERONGAN -TANGGULANGIN) EAST JAVA PROVINCE	SCALE : 1 : 200 FULL SIZE A3	DRAWING TITLE : DRAINAGE LAYOUT AND ELEVATION AT VIADUCT 2 OF 4	DRAWING NO : TDV-004 SHEET NO : 04 / 31

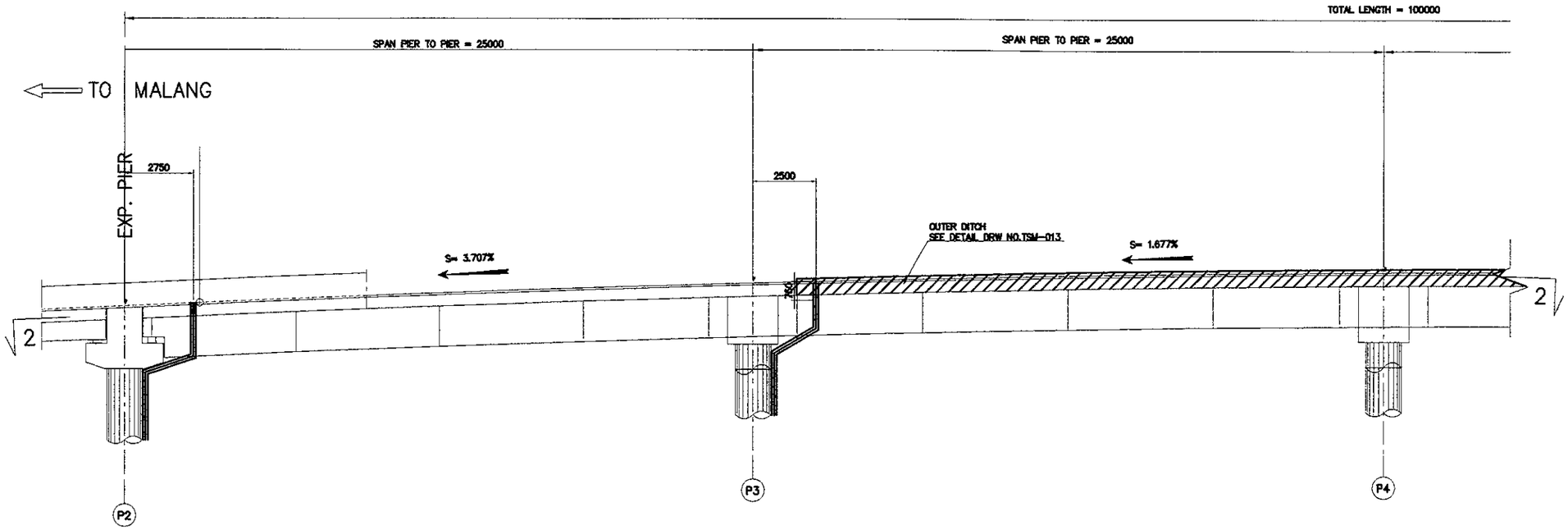

1 SECTION 1-1
SCALE 1 : 200

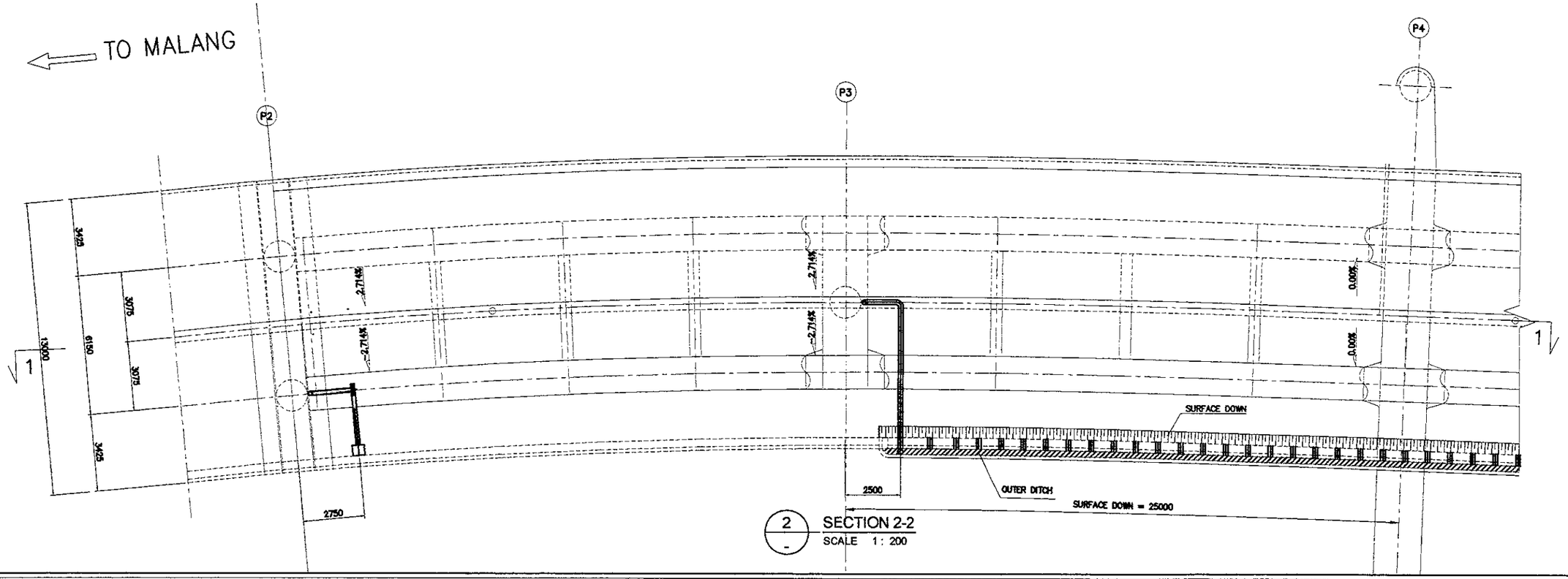

2 SECTION 2-2
SCALE 1 : 200

JAPAN INTERNATIONAL COOPERATION AGENCY KATAHIRA & ENGINEERS INTERNATIONAL	DESIGNED BY	CHECKED BY	SUBMITTED BY	REPUBLIC OF INDONESIA MINISTRY OF PUBLIC WORKS DIRECTORATE GENERAL OF HIGHWAYS	PROJECT AND LOCATION :	SCALE :	DRAWING TITLE :	DRAWING NO :
	Name R. UENO	Name T. OKUMURA	Name M. KIUCHI		DETAILED DESIGN STUDY OF NORTH JAVA CORRIDOR FLYOVER PROJECT TANGGULANGIN FLYOVER - CONTRACT PACKAGE 3 (PETERONGAN -TANGGULANGIN) EAST JAVA PROVINCE	1 : 200	DRAINAGE LAYOUT AND ELEVATION AT VIADUCT 3 OF 4	TDV-005
	Sign	Sign	Sign	APPROVED BY Ir. HERRY VAZA M,Eng.Sc NIP. : 110038400 Sign				SHEET NO :
	Date	Date	Date	Date		FULL SIZE A3		05 / 31

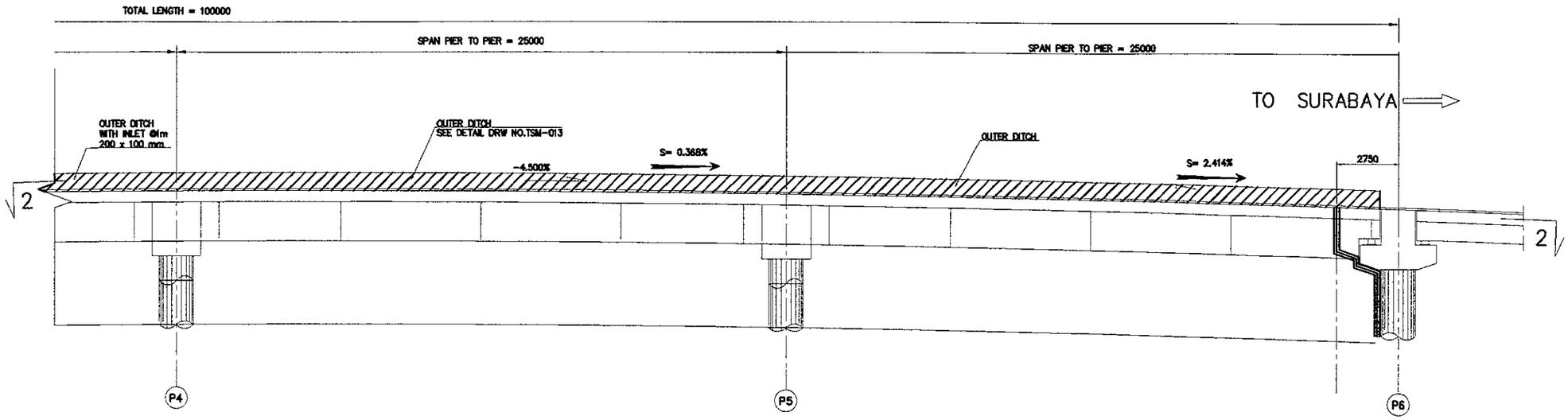

1 SECTION 1-1
SCALE 1 : 200

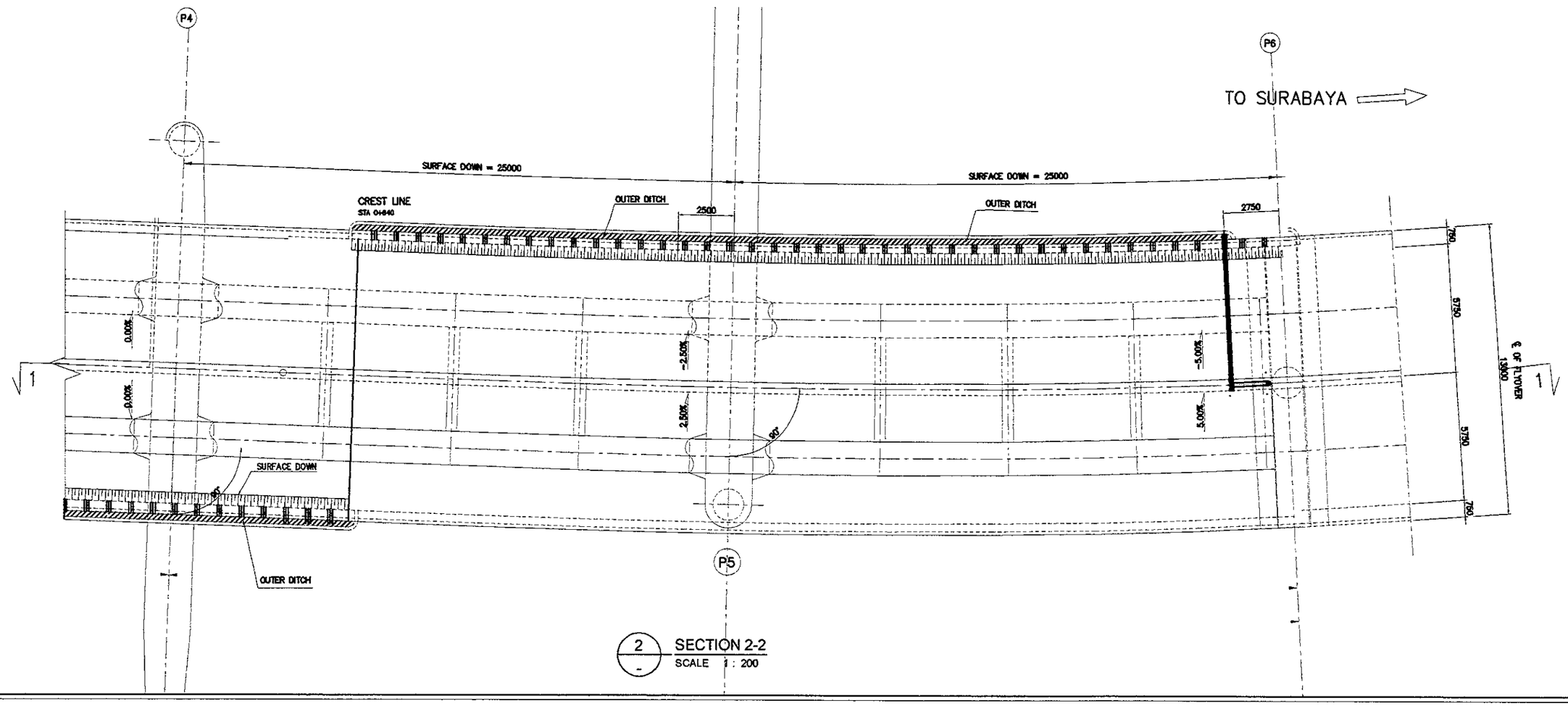

2 SECTION 2-2
SCALE 1 : 200

JAPAN INTERNATIONAL COOPERATION AGENCY KATAHIRA & ENGINEERS INTERNATIONAL	DESIGNED BY	CHECKED BY	SUBMITTED BY	REPUBLIC OF INDONESIA MINISTRY OF PUBLIC WORKS DIRECTORATE GENERAL OF HIGHWAYS	PROJECT AND LOCATION :	SCALE :	DRAWING TITLE :	DRAWING NO :
	Name: R. UENO	Name: T. OKUMURA	Name: M. KIUCHI		DETAILED DESIGN STUDY OF NORTH JAVA CORRIDOR FLYOVER PROJECT TANGGULANGIN FLYOVER - CONTRACT PACKAGE 3 (PETERONGAN -TANGGULANGIN) EAST JAVA PROVINCE	1 : 200	DRAINAGE LAYOUT AND ELEVATION AT VIADUCT 4 OF 4	TDV-006
	Sign	Sign	Sign	APPROVED BY: Ir. HERRY VAZA M,Eng.Sc NIP. : 110038400				SHEET NO :
	Date	Date	Date	Sign / Date		FULL SIZE A3		06 / 31

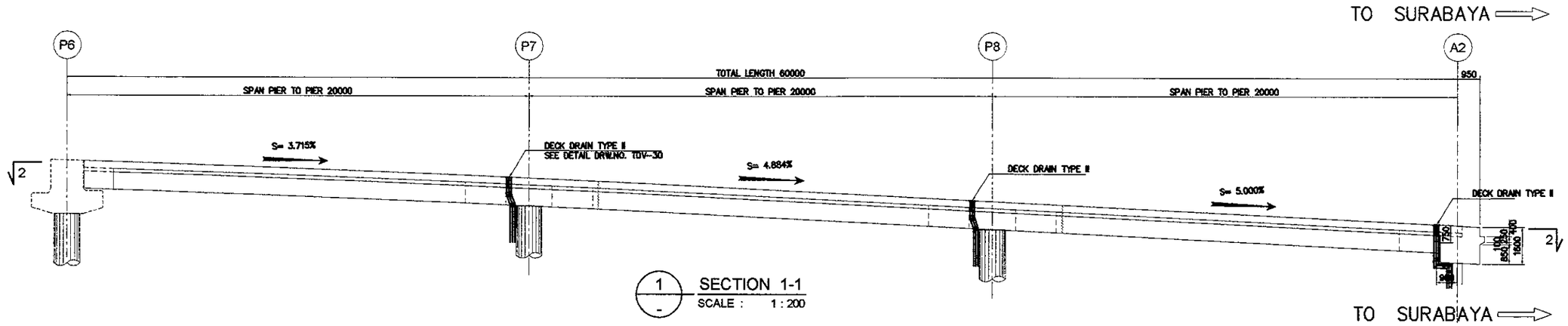

1 SECTION 1-1
SCALE : 1 : 200

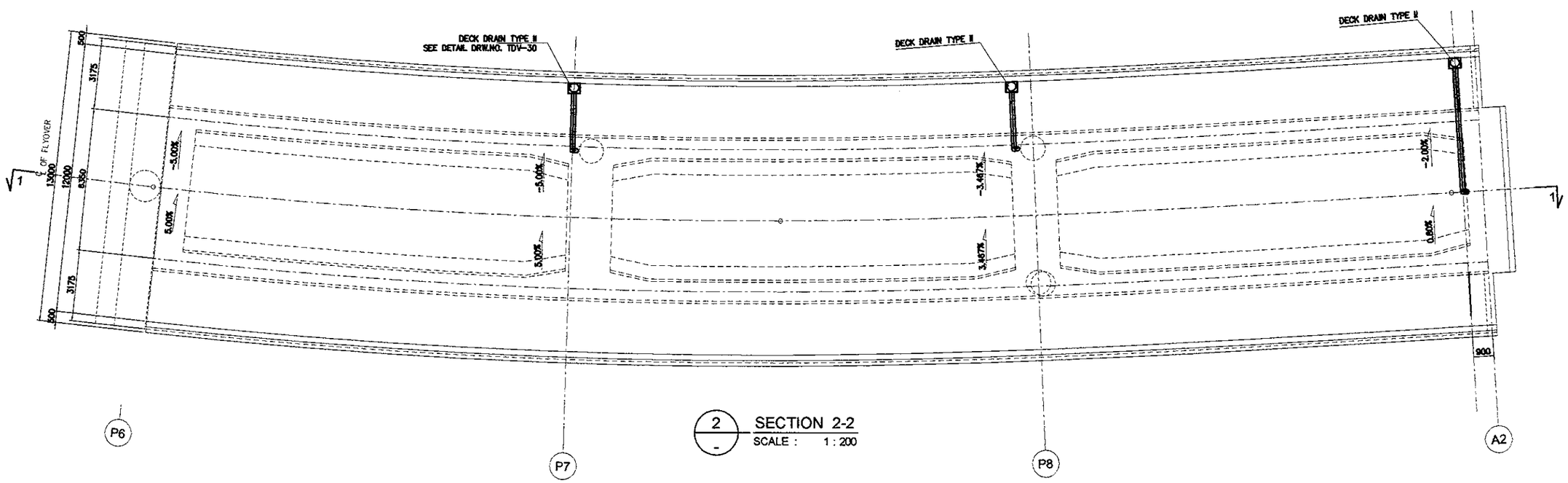

2 SECTION 2-2
SCALE : 1 : 200

JAPAN INTERNATIONAL COOPERATION AGENCY KATAHIRA & ENGINEERS INTERNATIONAL	DESIGNED BY		CHECKED BY		SUBMITTED BY		REPUBLIC OF INDONESIA MINISTRY OF PUBLIC WORKS DIRECTORATE GENERAL OF HIGHWAYS				PROJECT AND LOCATION :	SCALE :	DRAWING TITLE :	DRAWING NO :
	Name	R. UENO	Name	T. OKUMURA	Name	M. KIUCHI					DETAILED DESIGN STUDY OF NORTH JAVA CORRIDOR FLYOVER PROJECT TANGGULANGIN FLYOVER - CONTRACT PACKAGE 3 (PETERONGAN -TANGGULANGIN) EAST JAVA PROVINCE	1 : 400	DRAINAGE LAYOUT PLAN UNDER VIADUCT AT GRADE LEVEL 1 OF 2	TDV-007
	Sign		Sign		Sign		APPROVED BY	Ir. HERRY VAZA M,Eng.Sc NIP. : 110038400	Sign					SHEET NO :
	Date		Date		Date				Date			FULL SIZE A3		07 / 31

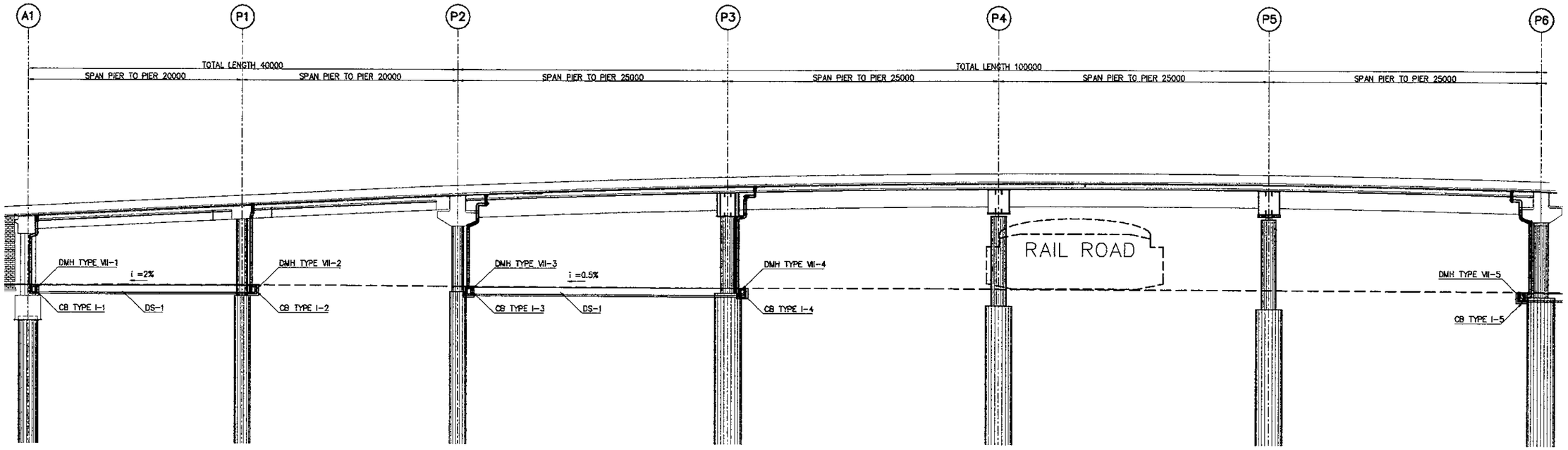

2 - ELEVATION
SCALE 1:400

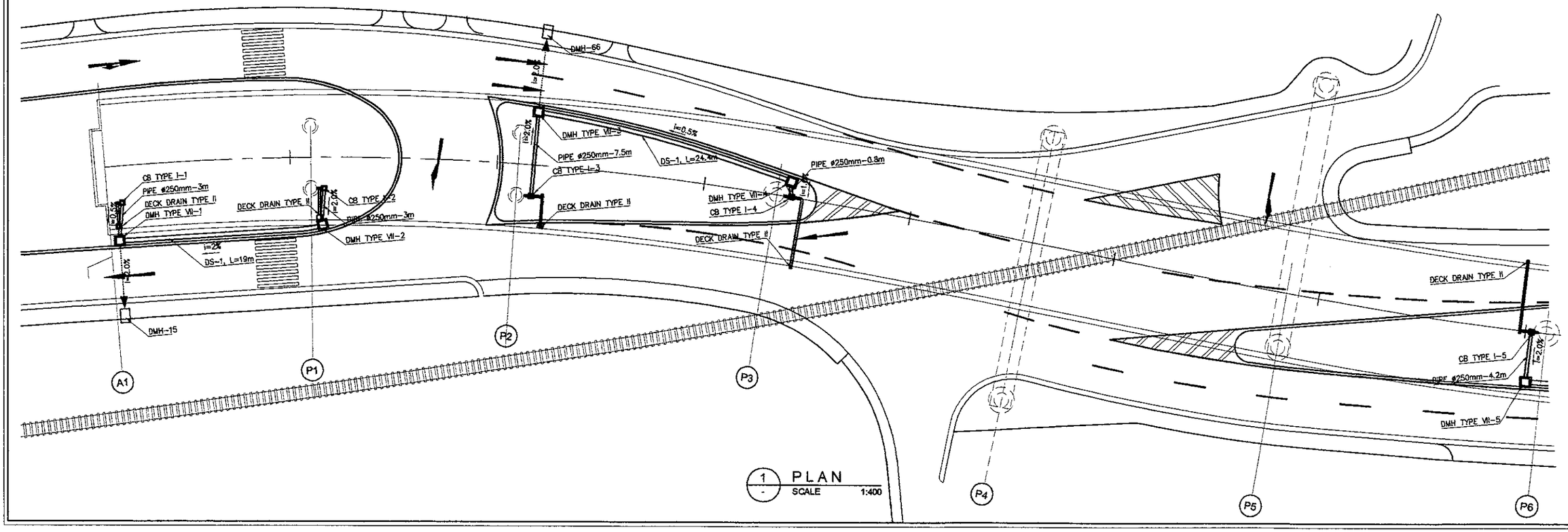

1 - PLAN
SCALE 1:400

JAPAN INTERNATIONAL COOPERATION AGENCY KATAHIRA & ENGINEERS INTERNATIONAL	DESIGNED BY	CHECKED BY	SUBMITTED BY	REPUBLIC OF INDONESIA MINISTRY OF PUBLIC WORKS DIRECTORATE GENERAL OF HIGHWAYS	PROJECT AND LOCATION :	SCALE :	DRAWING TITLE :	DRAWING NO :
	Name: R. UENO	Name: T. OKUMURA	Name: M. KIUCHI		DETAILED DESIGN STUDY OF NORTH JAVA CORRIDOR FLYOVER PROJECT TANGGULANGIN FLYOVER - CONTRACT PACKAGE 3 (PETERONGAN -TANGGULANGIN) EAST JAVA PROVINCE	1 : 400	DRAINAGE LAYOUT PLAN UNDER VIADUCT AT GRADE LEVEL 2 OF 2	TDV-008
	Sign	Sign	Sign	APPROVED BY: Ir. HERRY VAZA M,Eng.Sc NIP. : 110038400				SHEET NO :
	Date	Date	Date	Sign / Date		FULL SIZE A3		08 / 31

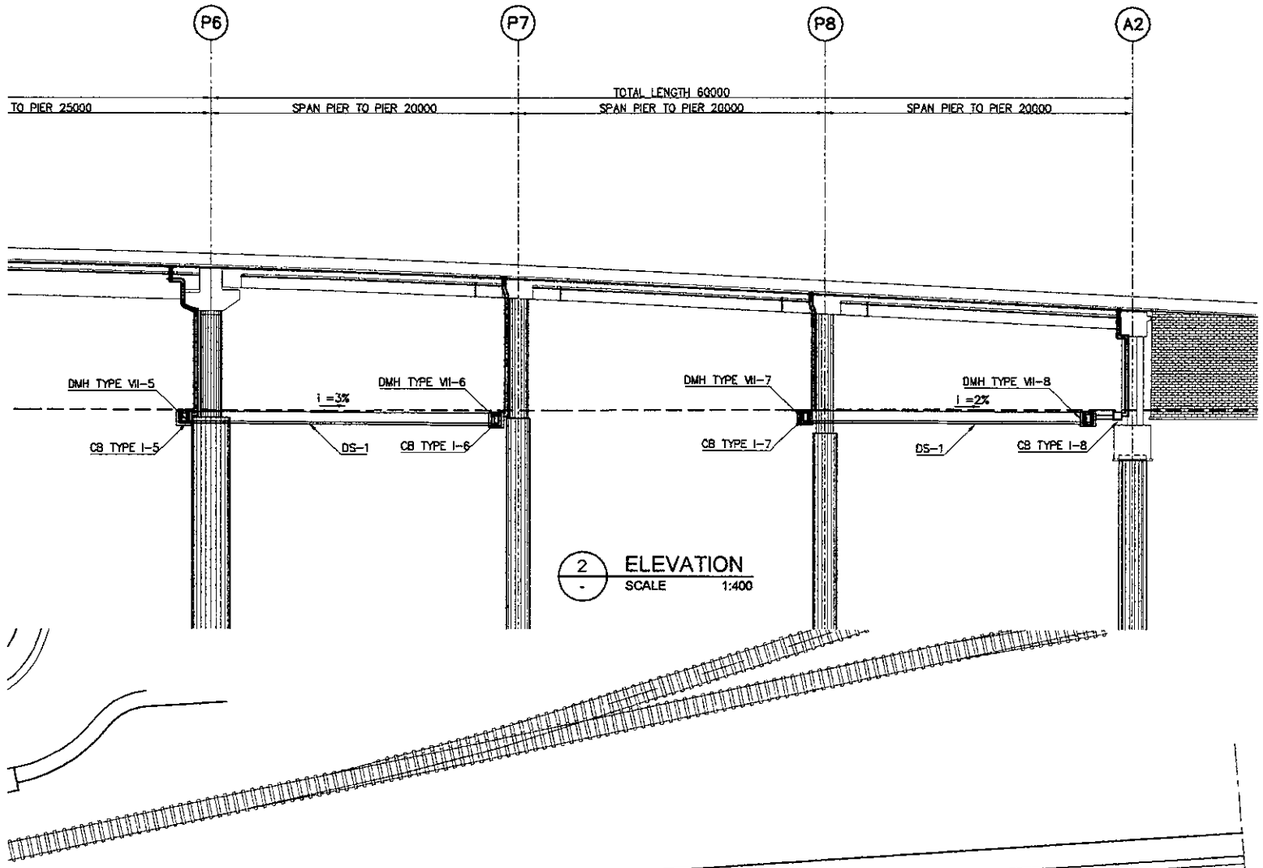

2 ELEVATION
SCALE 1:400

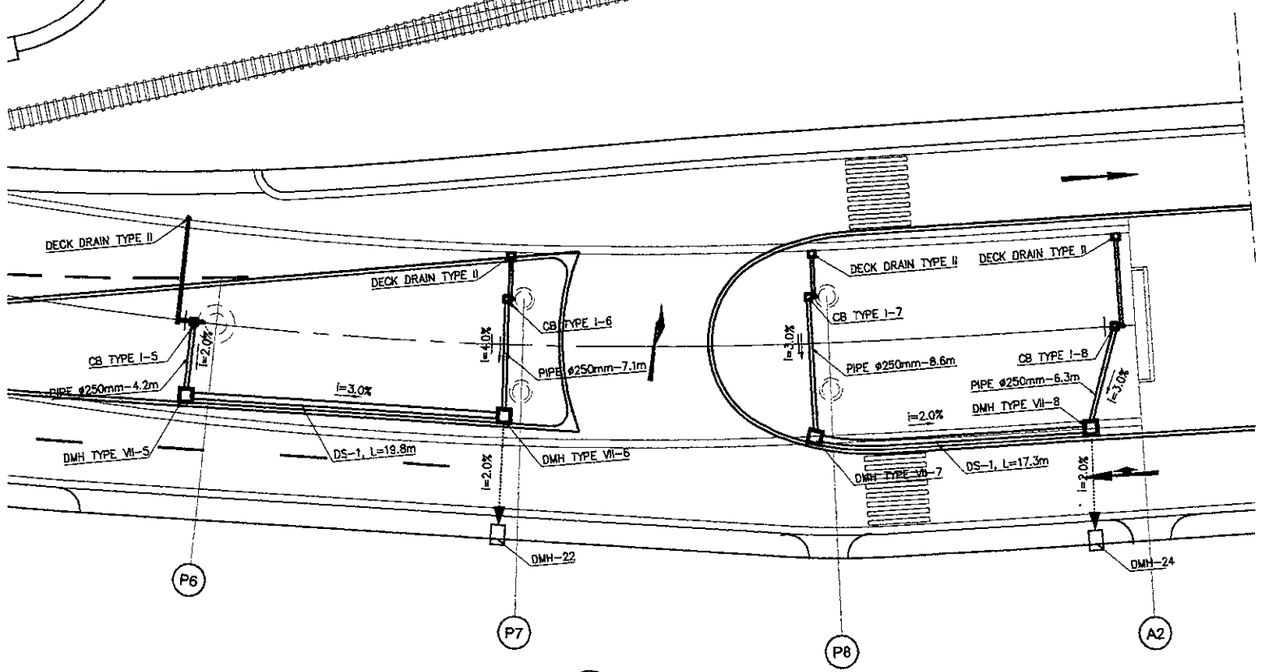

1 PLAN
SCALE 1:400

JAPAN INTERNATIONAL COOPERATION AGENCY / KATAHIRA & ENGINEERS INTERNATIONAL	DESIGNED BY	CHECKED BY	SUBMITTED BY	REPUBLIC OF INDONESIA MINISTRY OF PUBLIC WORKS DIRECTORATE GENERAL OF HIGHWAYS	PROJECT AND LOCATION :	SCALE :	DRAWING TITLE :	DRAWING NO :
	Name: R. UENO	Name: T. OKUMURA	Name: M. KIUCHI		DETAILED DESIGN STUDY OF NORTH JAVA CORRIDOR FLYOVER PROJECT TANGGULANGIN FLYOVER - CONTRACT PACKAGE 3 (PETERONGAN -TANGGULANGIN) EAST JAVA PROVINCE	1 : 100	ABUTMENT AND PIER SECTIONS SHOWING DOWNSPOUT PIPE 1 OF 10	TDV-009
	Sign	Sign	Sign	APPROVED BY: Ir. HERRY VAZA M,Eng.Sc NIP. : 110038400				SHEET NO :
	Date	Date	Date	Sign / Date		FULL SIZE A3		09 / 31

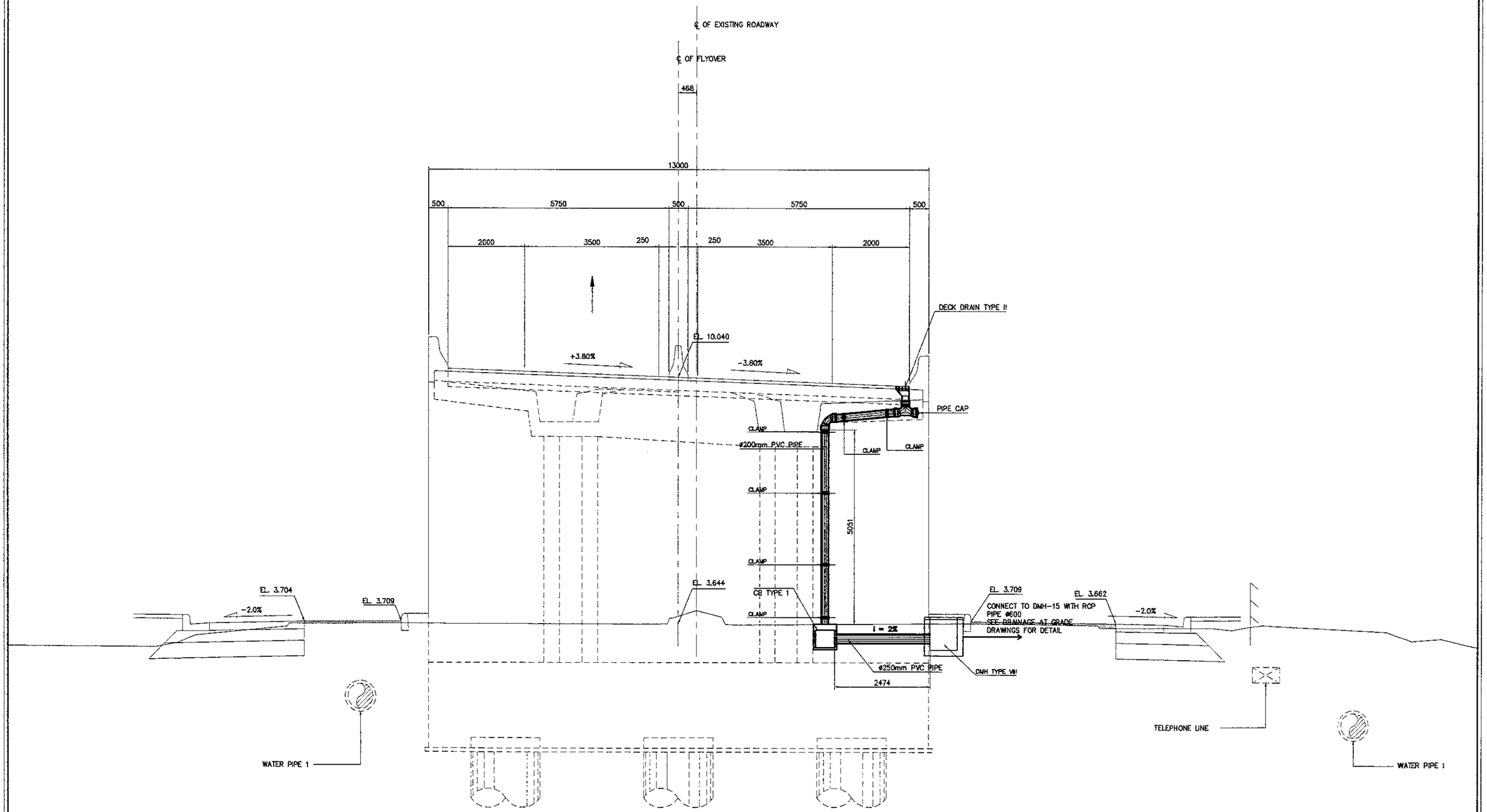

1 / - A1 SECTION (STA. 0 + 542.00)
SCALE 1:100

JAPAN INTERNATIONAL COOPERATION AGENCY KATAHIRA & ENGINEERS INTERNATIONAL	DESIGNED BY	CHECKED BY	SUBMITTED BY	REPUBLIC OF INDONESIA MINISTRY OF PUBLIC WORKS DIRECTORATE GENERAL OF HIGHWAYS	PROJECT AND LOCATION :	SCALE :	DRAWING TITLE :	DRAWING NO :
	Name: R. UENO	Name: T. OKUMURA	Name: M. KIUCHI		DETAILED DESIGN STUDY OF NORTH JAVA CORRIDOR FLYOVER PROJECT TANGGULANGIN FLYOVER - CONTRACT PACKAGE 3 (PETERONGAN -TANGGULANGIN) EAST JAVA PROVINCE	1 : 100	ABUTMENT AND PIER SECTIONS SHOWING DOWNSPOUT PIPE 2 OF 10	TDV-010
	Sign	Sign	Sign	APPROVED BY: Ir. HERRY VAZA M,Eng.Sc NIP. : 110038400				SHEET NO :
	Date	Date	Date	Sign / Date		FULL SIZE A3		10 / 31

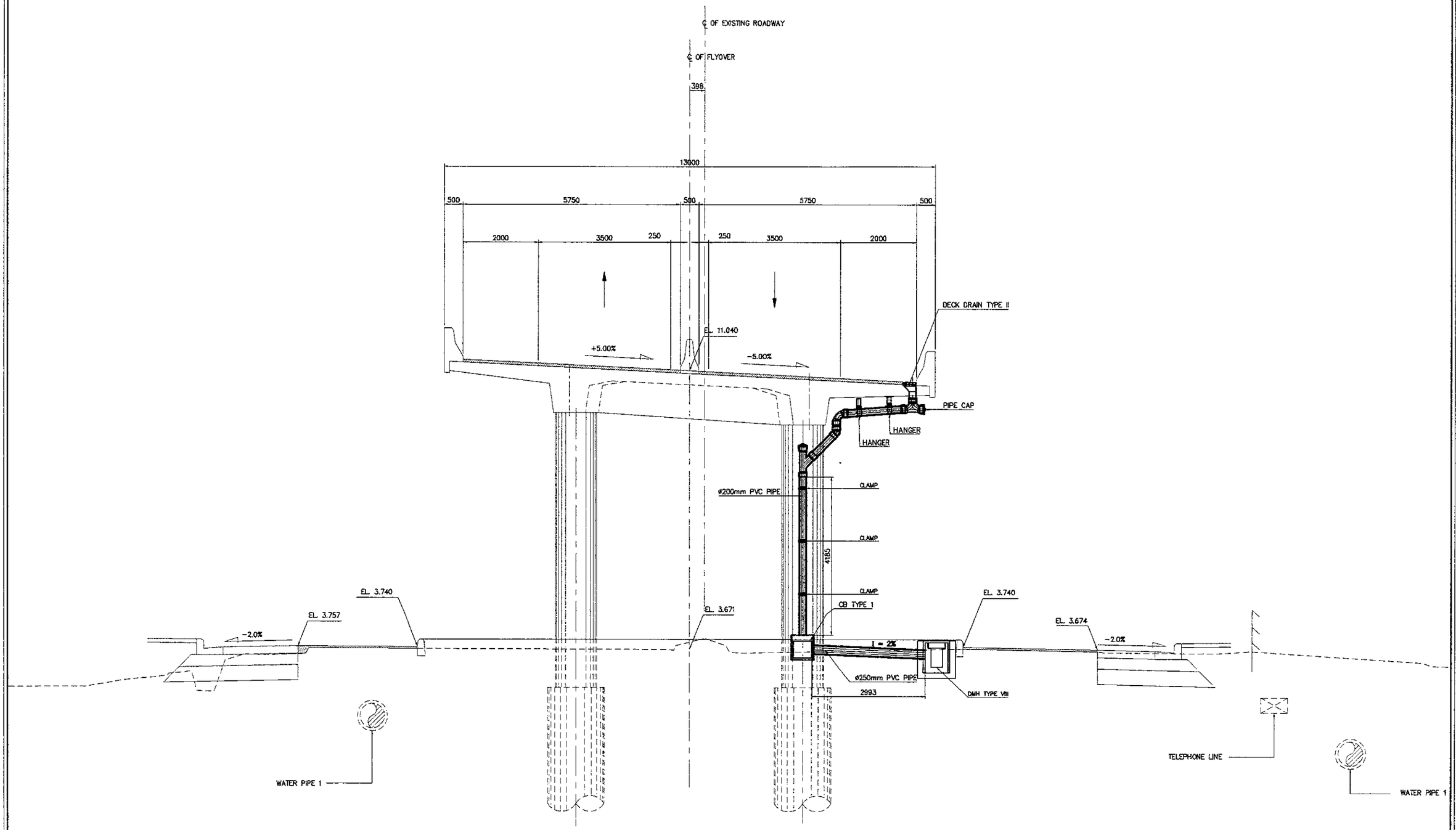

1 P1 SECTION (STA. 0 + 562.00)
SCALE 1:100

JAPAN INTERNATIONAL COOPERATION AGENCY KATAHIRA & ENGINEERS INTERNATIONAL	DESIGNED BY	CHECKED BY	SUBMITTED BY	REPUBLIC OF INDONESIA MINISTRY OF PUBLIC WORKS DIRECTORATE GENERAL OF HIGHWAYS	PROJECT AND LOCATION :	SCALE :	DRAWING TITLE :	DRAWING NO :
	Name: R. UENO	Name: T. OKUMURA	Name: M. KIUCHI		DETAILED DESIGN STUDY OF NORTH JAVA CORRIDOR FLYOVER PROJECT TANGGULANGIN FLYOVER - CONTRACT PACKAGE 3 (PETERONGAN -TANGGULANGIN) EAST JAVA PROVINCE	1 : 100	ABUTMENT AND PIER SECTIONS SHOWING DOWNSPOUT PIPE 3 OF 10	TDV-011
	Sign	Sign	Sign	APPROVED BY: Ir. HERRY VAZA M,Eng,Sc NIP. : 110038400				SHEET NO :
	Date	Date	Date	Sign / Date		FULL SIZE A3		11 / 31

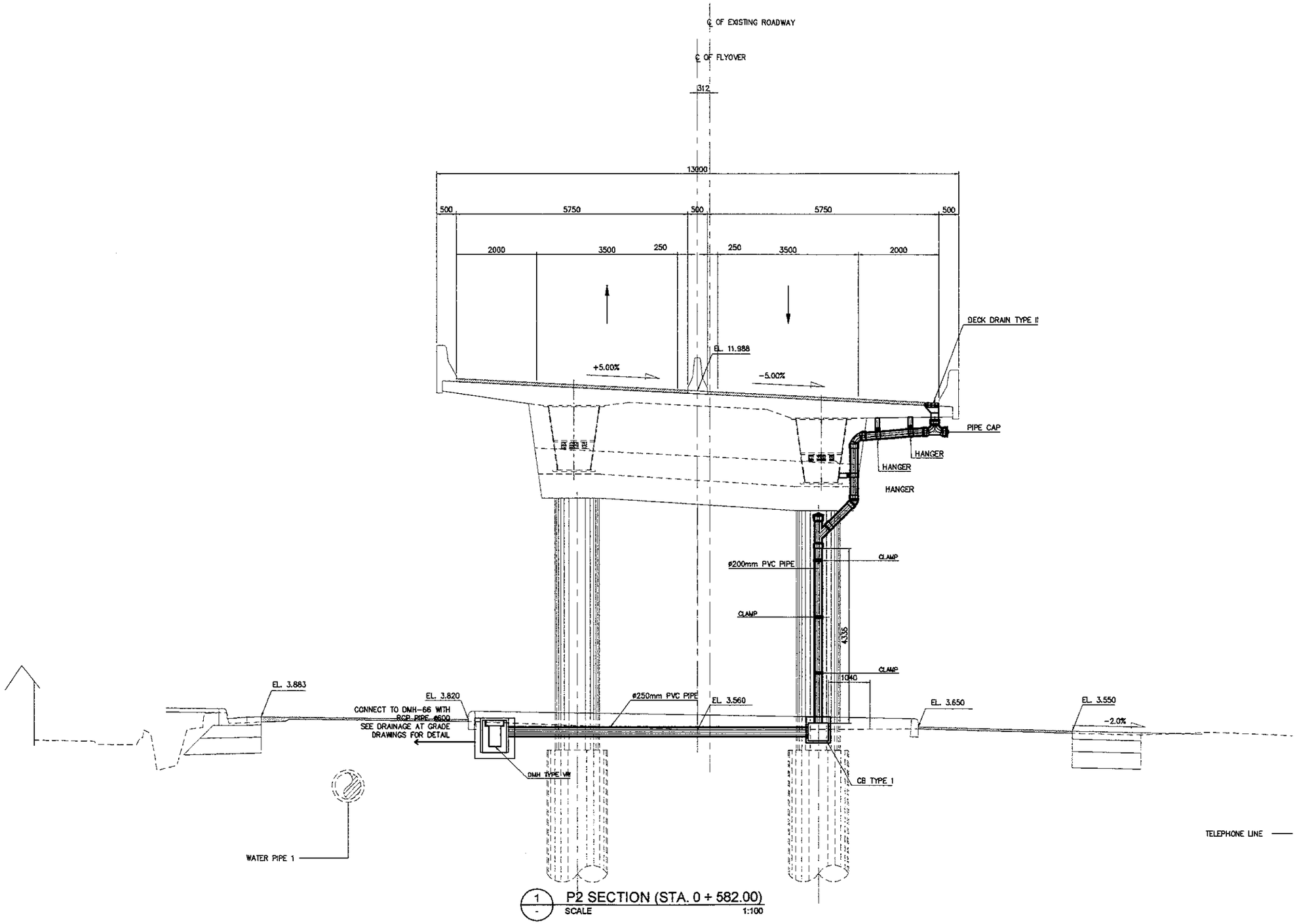

1 - P2 SECTION (STA. 0 + 582.00)
SCALE 1:100

JAPAN INTERNATIONAL COOPERATION AGENCY / KATAHIRA & ENGINEERS INTERNATIONAL	DESIGNED BY	CHECKED BY	SUBMITTED BY	REPUBLIC OF INDONESIA MINISTRY OF PUBLIC WORKS DIRECTORATE GENERAL OF HIGHWAYS	PROJECT AND LOCATION :	SCALE :	DRAWING TITLE :	DRAWING NO :
	Name: R. UENO	Name: T. OKUMURA	Name: M. KIUCHI		DETAILED DESIGN STUDY OF NORTH JAVA CORRIDOR FLYOVER PROJECT TANGGULANGIN FLYOVER - CONTRACT PACKAGE 3 (PETERONGAN -TANGGULANGIN) EAST JAVA PROVINCE	1 : 100	ABUTMENT AND PIER SECTIONS SHOWING DOWNSPOUT PIPE 4 OF 10	TDV-012
	Sign	Sign	Sign	APPROVED BY: Ir. HERRY VAZA M,Eng.Sc NIP. : 110038400				SHEET NO :
	Date	Date	Date	Sign / Date		FULL SIZE A3		12 / 31

i (%)	io (%)
1	6
2	7
3	8
4	9
5	10

DETAIL OF OUTER DITCH
SCALE 1:25

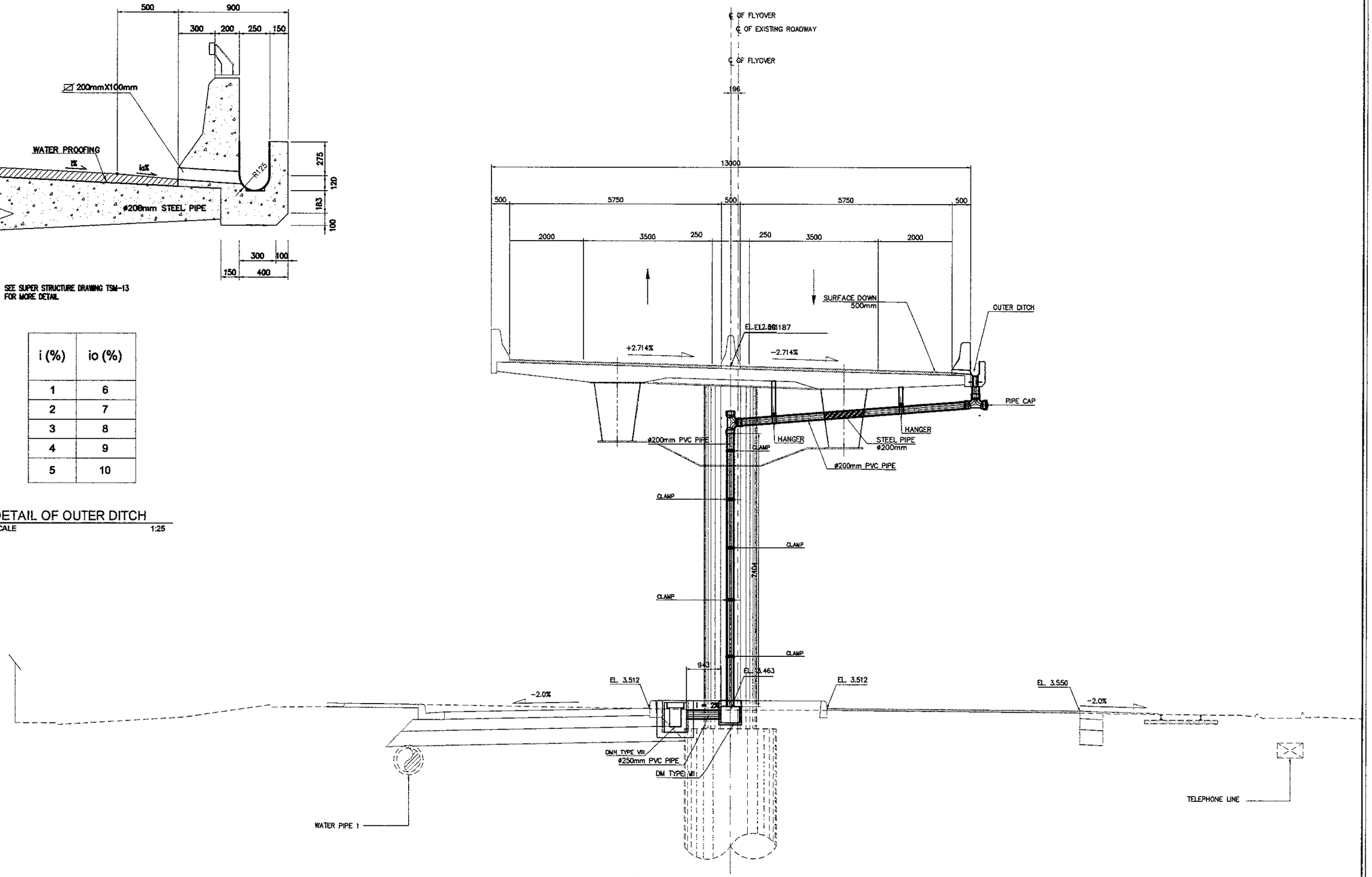

1 / - P3 SECTION (STA. 0 + 607.00)
1:100

JAPAN INTERNATIONAL COOPERATION AGENCY KATAHIRA & ENGINEERS INTERNATIONAL	DESIGNED BY	CHECKED BY	SUBMITTED BY	REPUBLIC OF INDONESIA MINISTRY OF PUBLIC WORKS DIRECTORATE GENERAL OF HIGHWAYS	PROJECT AND LOCATION :	SCALE :	DRAWING TITLE :	DRAWING NO :
	Name: R. UENO	Name: T. OKUMURA	Name: M. KIUCHI		DETAILED DESIGN STUDY OF NORTH JAVA CORRIDOR FLYOVER PROJECT TANGGULANGIN FLYOVER - CONTRACT PACKAGE 3 (PETERONGAN -TANGGULANGIN) EAST JAVA PROVINCE	1 : 100	ABUTMENT AND PIER SECTIONS SHOWING DOWNSPOUT PIPE 5 OF 10	TDV-013
	Sign	Sign	Sign	APPROVED BY: Ir. HERRY VAZA M.Eng.Sc NIP. : 110038400				SHEET NO :
	Date	Date	Date	Sign / Date		FULL SIZE A3		13 / 31

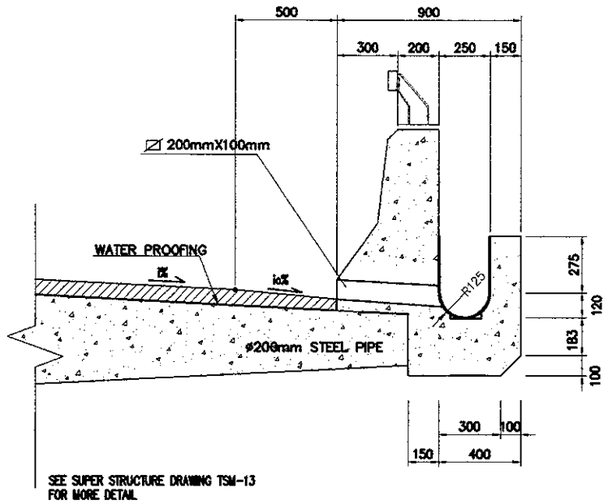

i (%)	io (%)
1	6
2	7
3	8
4	9
5	10

DETAIL OF OUTER DITCH
SCALE 1:25

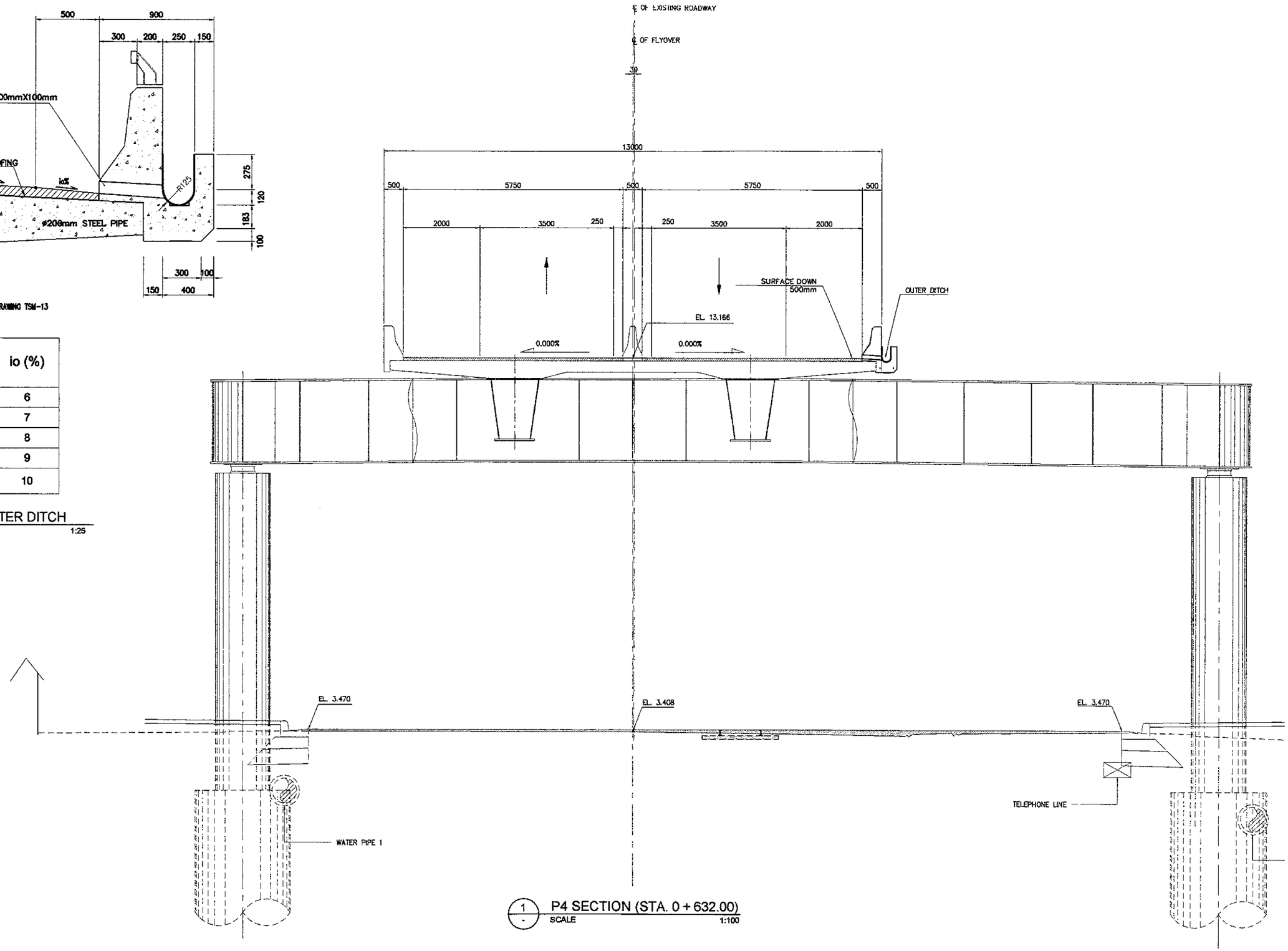

1 / - P4 SECTION (STA. 0 + 632.00)
SCALE 1:100

JICA JAPAN INTERNATIONAL COOPERATION AGENCY / KEI KATAHIRA & ENGINEERS INTERNATIONAL	DESIGNED BY	CHECKED BY	SUBMITTED BY	REPUBLIC OF INDONESIA MINISTRY OF PUBLIC WORKS DIRECTORATE GENERAL OF HIGHWAYS	PROJECT AND LOCATION :	SCALE :	DRAWING TITLE :	DRAWING NO :
	Name R. UENO	Name T. OKUMURA	Name M. KIUCHI		DETAILED DESIGN STUDY OF NORTH JAVA CORRIDOR FLYOVER PROJECT TANGGULANGIN FLYOVER - CONTRACT PACKAGE 3 (PETERONGAN -TANGGULANGIN) EAST JAVA PROVINCE	1 : 100	ABUTMENT AND PIER SECTIONS SHOWING DOWNSPOUT PIPE 6 OF 10	TDV-014
	Sign	Sign	Sign	APPROVED BY Ir. HERRY VAZA M,Eng.Sc NIP. : 110038400 Sign		FULL SIZE A3		SHEET NO : 14 / 31
	Date	Date	Date	Date				

i (%)	io (%)
1	6
2	7
3	8
4	9
5	10

DETAIL OF OUTER DITCH
SCALE 1:25

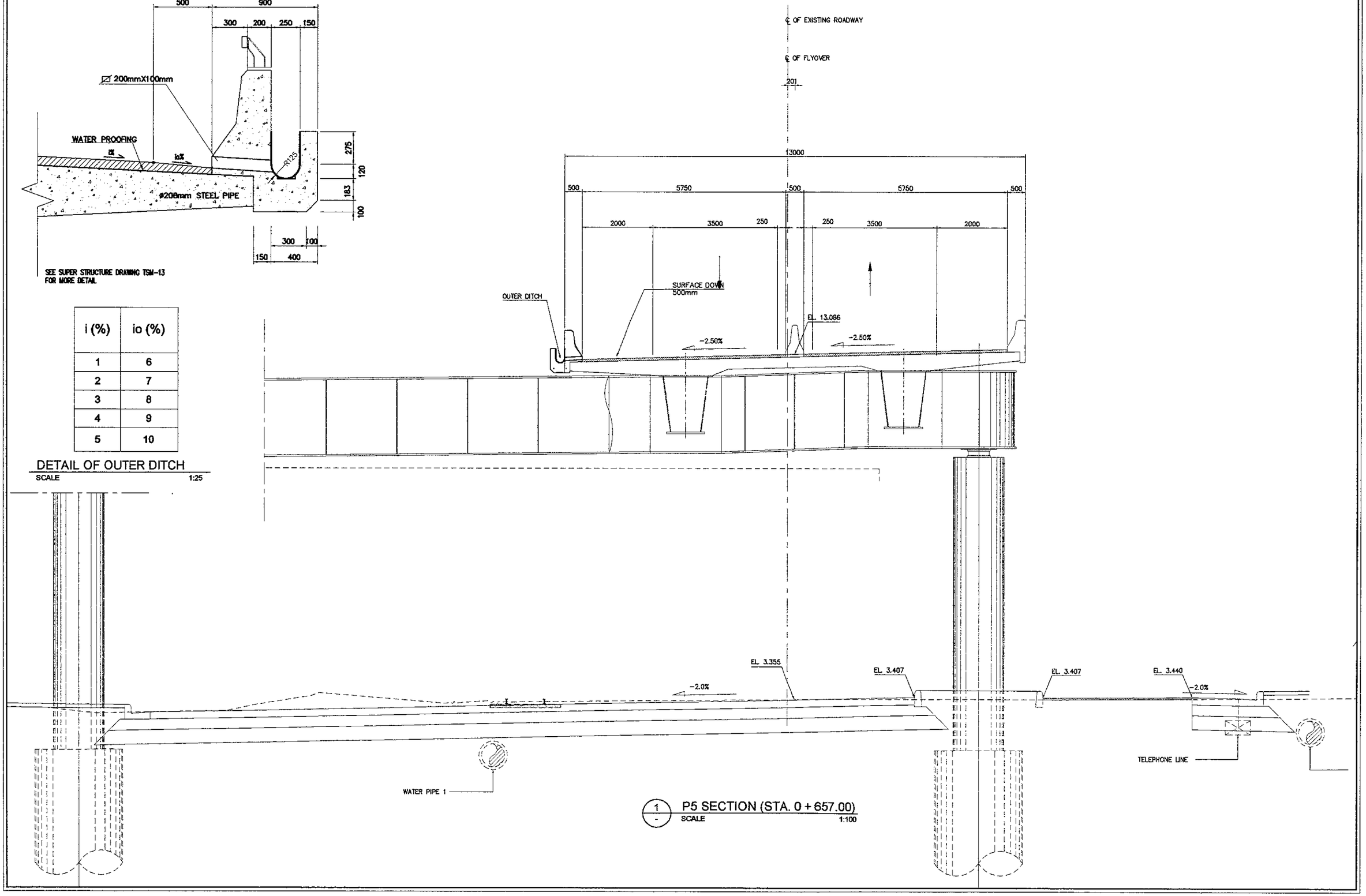

1 / - P5 SECTION (STA. 0 + 657.00)
SCALE 1:100

JAPAN INTERNATIONAL COOPERATION AGENCY / KATAHIRA & ENGINEERS INTERNATIONAL	DESIGNED BY	CHECKED BY	SUBMITTED BY	REPUBLIC OF INDONESIA MINISTRY OF PUBLIC WORKS DIRECTORATE GENERAL OF HIGHWAYS	PROJECT AND LOCATION :	SCALE :	DRAWING TITLE :	DRAWING NO :
	Name: R. UENO	Name: T. OKUMURA	Name: M. KIUCHI		DETAILED DESIGN STUDY OF NORTH JAVA CORRIDOR FLYOVER PROJECT TANGGULANGIN FLYOVER - CONTRACT PACKAGE 3 (PETERONGAN -TANGGULANGIN) EAST JAVA PROVINCE	1 : 100 FULL SIZE A3	ABUTMENT AND PIER SECTIONS SHOWING DOWNSPOUT PIPE 7 OF 10	TDV-015 SHEET NO : 15 / 31
	Sign	Sign	Sign	APPROVED BY: Ir. HERRY VAZA M,Eng.Sc NIP. : 110038400				
	Date	Date	Date	Sign / Date				

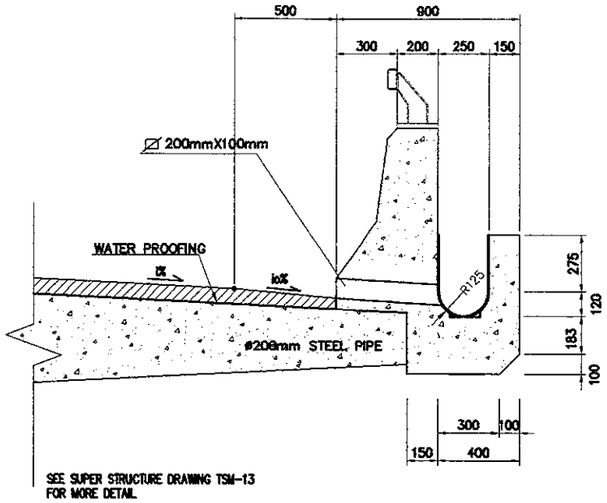

i (%)	io (%)
1	6
2	7
3	8
4	9
5	10

DETAIL OF OUTER DITCH
SCALE 1:25

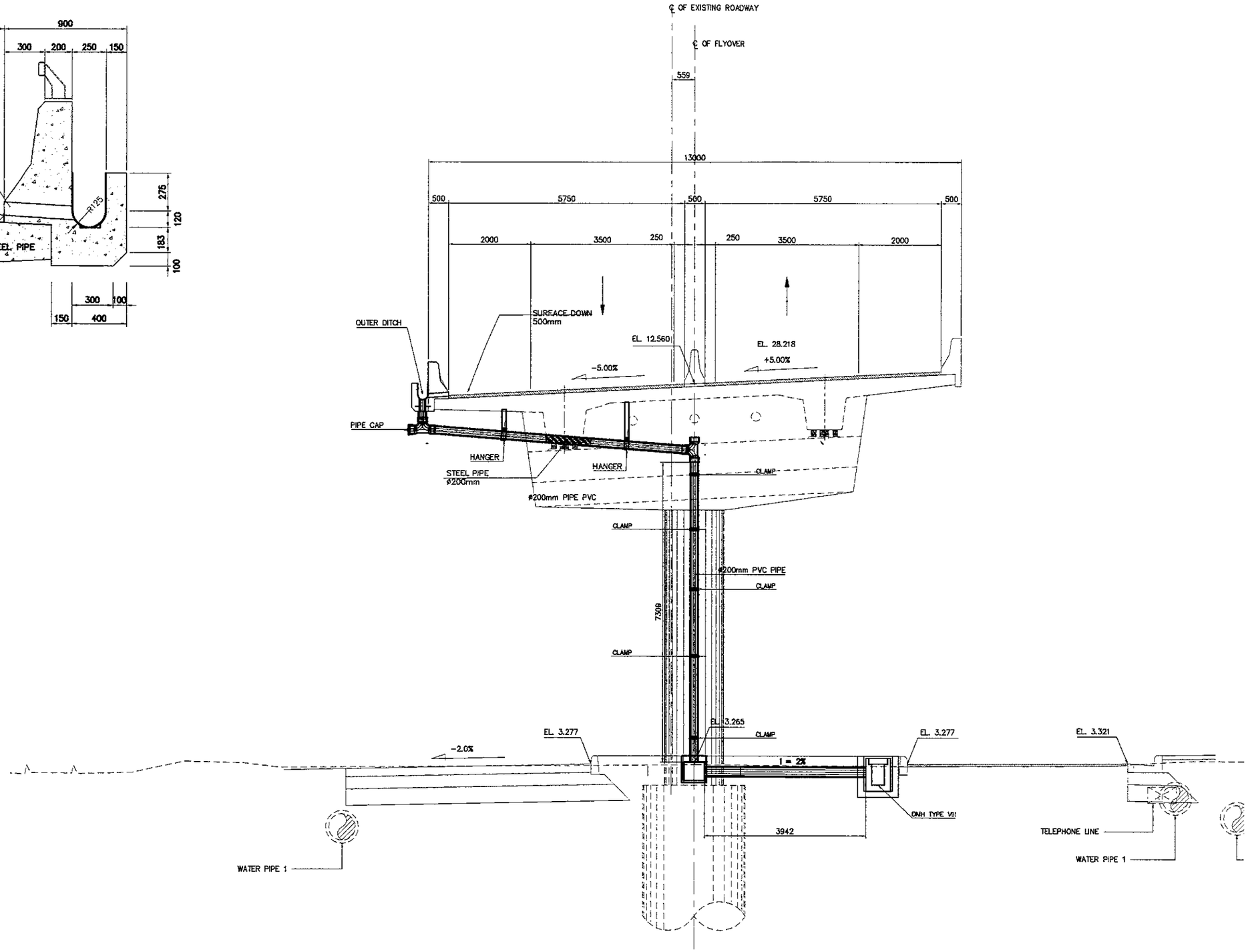

1 / - P6 SECTION (STA. 0 + 682.00)
SCALE 1:100

JICA JAPAN INTERNATIONAL COOPERATION AGENCY / KEI KATAHIRA & ENGINEERS INTERNATIONAL	DESIGNED BY	CHECKED BY	SUBMITTED BY	REPUBLIC OF INDONESIA MINISTRY OF PUBLIC WORKS DIRECTORATE GENERAL OF HIGHWAYS	PROJECT AND LOCATION :	SCALE :	DRAWING TITLE :	DRAWING NO :
	Name R. UENO	Name T. OKUMURA	Name M. KIUCHI		DETAILED DESIGN STUDY OF NORTH JAVA CORRIDOR FLYOVER PROJECT TANGGULANGIN FLYOVER - CONTRACT PACKAGE 3 (PETERONGAN -TANGGULANGIN) EAST JAVA PROVINCE	1 : 100	ABUTMENT AND PIER SECTIONS SHOWING DOWNSPOUT PIPE 8 OF 10	TDV-016
	Sign	Sign	Sign	APPROVED BY Ir. HERRY VAZA M,Eng.Sc NIP. : 110038400 Sign				SHEET NO :
	Date	Date	Date	Date		FULL SIZE A3		16 / 31

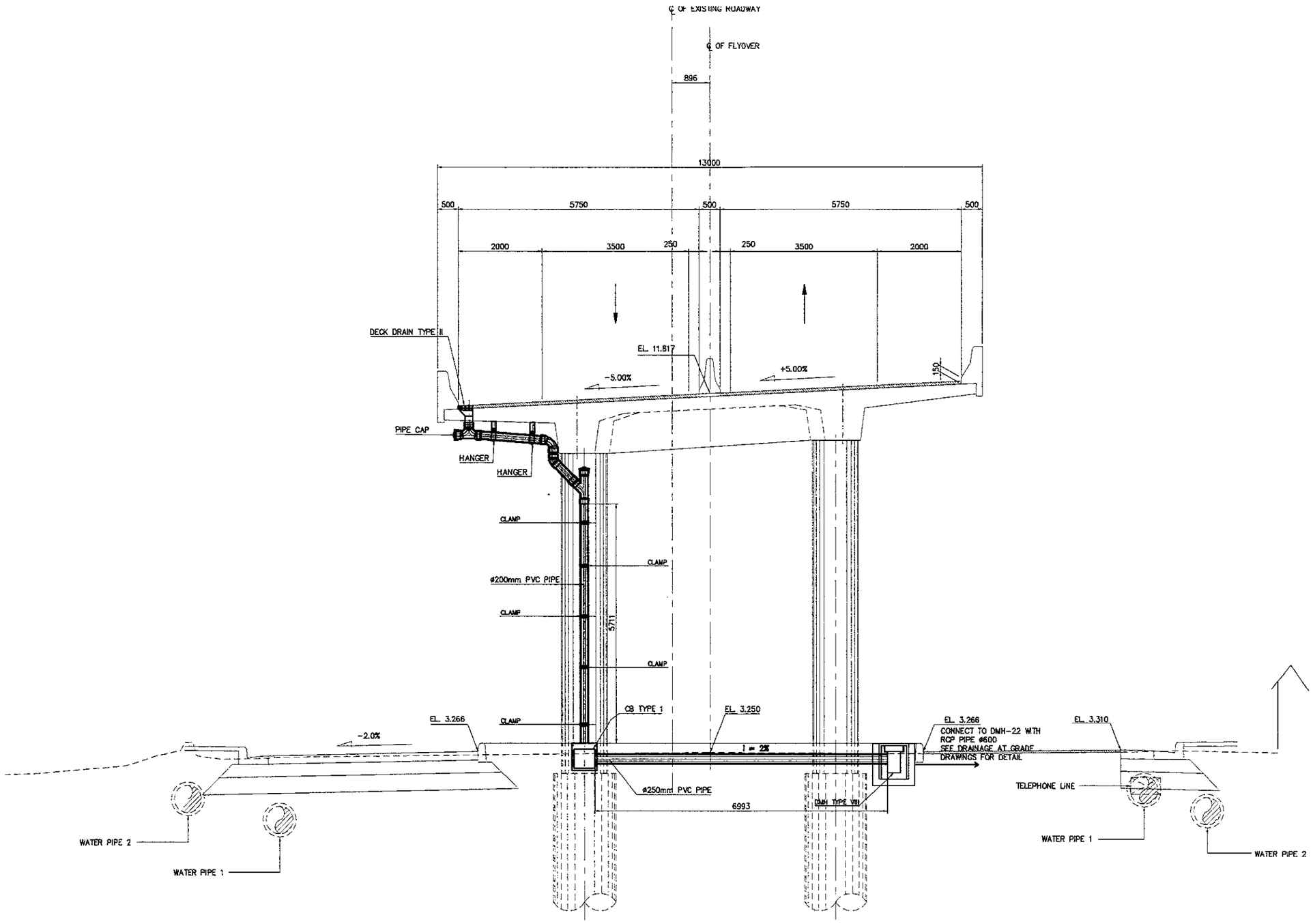

1 / - P7 SECTION (STA. 0 + 702.00)
1:100

JAPAN INTERNATIONAL COOPERATION AGENCY KATAHIRA & ENGINEERS INTERNATIONAL	DESIGNED BY	CHECKED BY	SUBMITTED BY	REPUBLIC OF INDONESIA MINISTRY OF PUBLIC WORKS DIRECTORATE GENERAL OF HIGHWAYS	PROJECT AND LOCATION :	SCALE :	DRAWING TITLE :	DRAWING NO :
	Name: R. UENO	Name: T. OKUMURA	Name: M. KIUCHI		DETAILED DESIGN STUDY OF NORTH JAVA CORRIDOR FLYOVER PROJECT TANGGULANGIN FLYOVER - CONTRACT PACKAGE 3 (PETERONGAN -TANGGULANGIN) EAST JAVA PROVINCE	1 : 100	ABUTMENT AND PIER SECTIONS SHOWING DOWNSPOUT PIPE 9 OF 10	TDV-017
	Sign	Sign	Sign	APPROVED BY: Ir. HERRY VAZA M.Eng.Sc NIP. : 110038400				SHEET NO :
	Date	Date	Date	Sign / Date		FULL SIZE A3		17 / 31

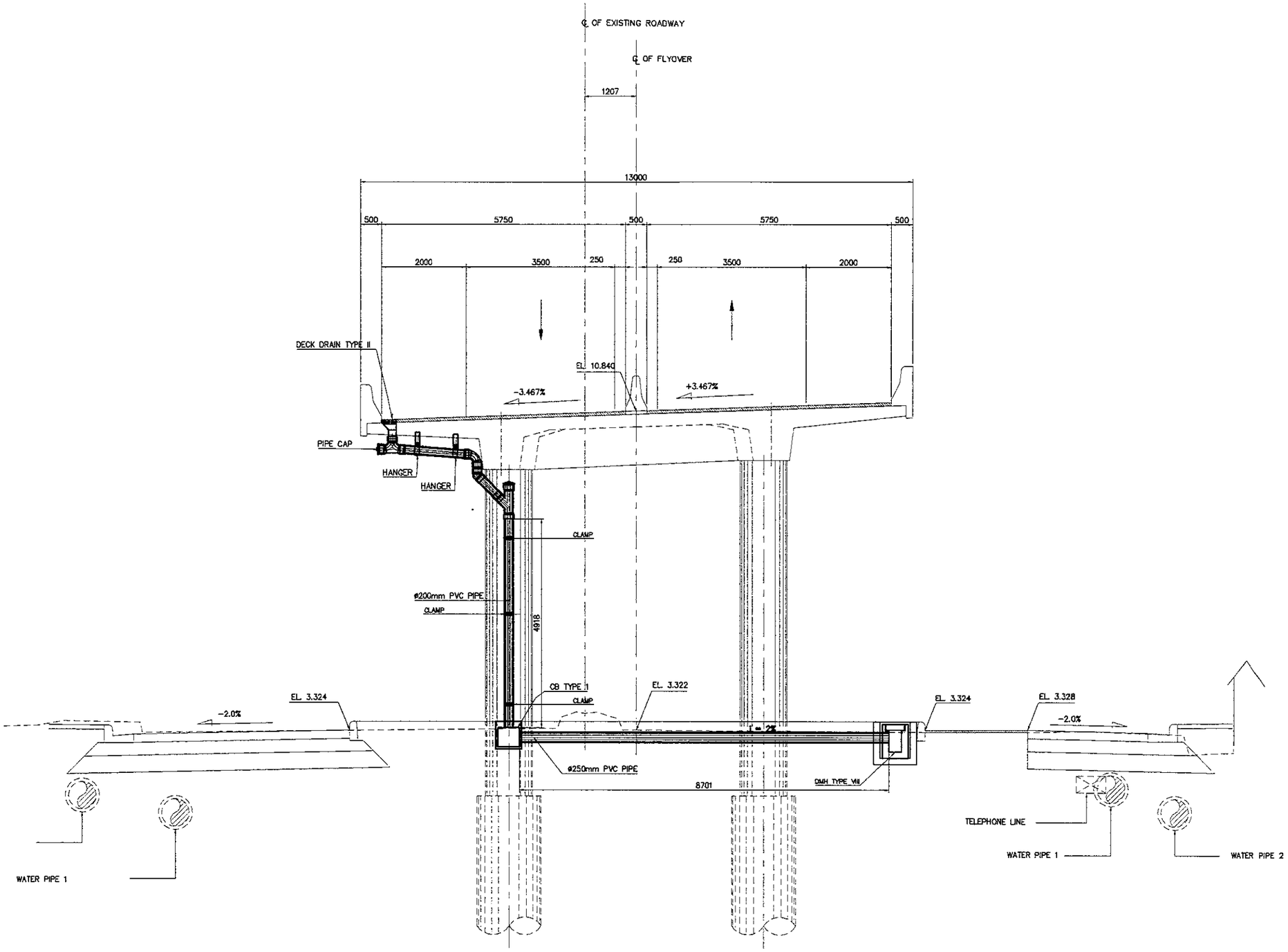

1 / - P8 SECTION (STA. 0 + 722. 00)
SCALE 1:100

JAPAN INTERNATIONAL COOPERATION AGENCY KATAHIRA & ENGINEERS INTERNATIONAL	DESIGNED BY	CHECKED BY	SUBMITTED BY	REPUBLIC OF INDONESIA MINISTRY OF PUBLIC WORKS DIRECTORATE GENERAL OF HIGHWAYS	PROJECT AND LOCATION :	SCALE :	DRAWING TITLE :	DRAWING NO :
	Name: R. UENO	Name: T. OKUMURA	Name: M. KIUCHI		DETAILED DESIGN STUDY OF NORTH JAVA CORRIDOR FLYOVER PROJECT TANGGULANGIN FLYOVER - CONTRACT PACKAGE 3 (PETERONGAN -TANGGULANGIN) EAST JAVA PROVINCE	1 : 100	ABUTMENT AND PIER SECTIONS SHOWING DOWNSPOUT PIPE 10 OF 10	TDV-018
	Sign	Sign	Sign	APPROVED BY: Ir. HERRY VAZA M,Eng.Sc NIP. : 110038400				SHEET NO :
	Date	Date	Date	Sign / Date		FULL SIZE A3		18 / 31

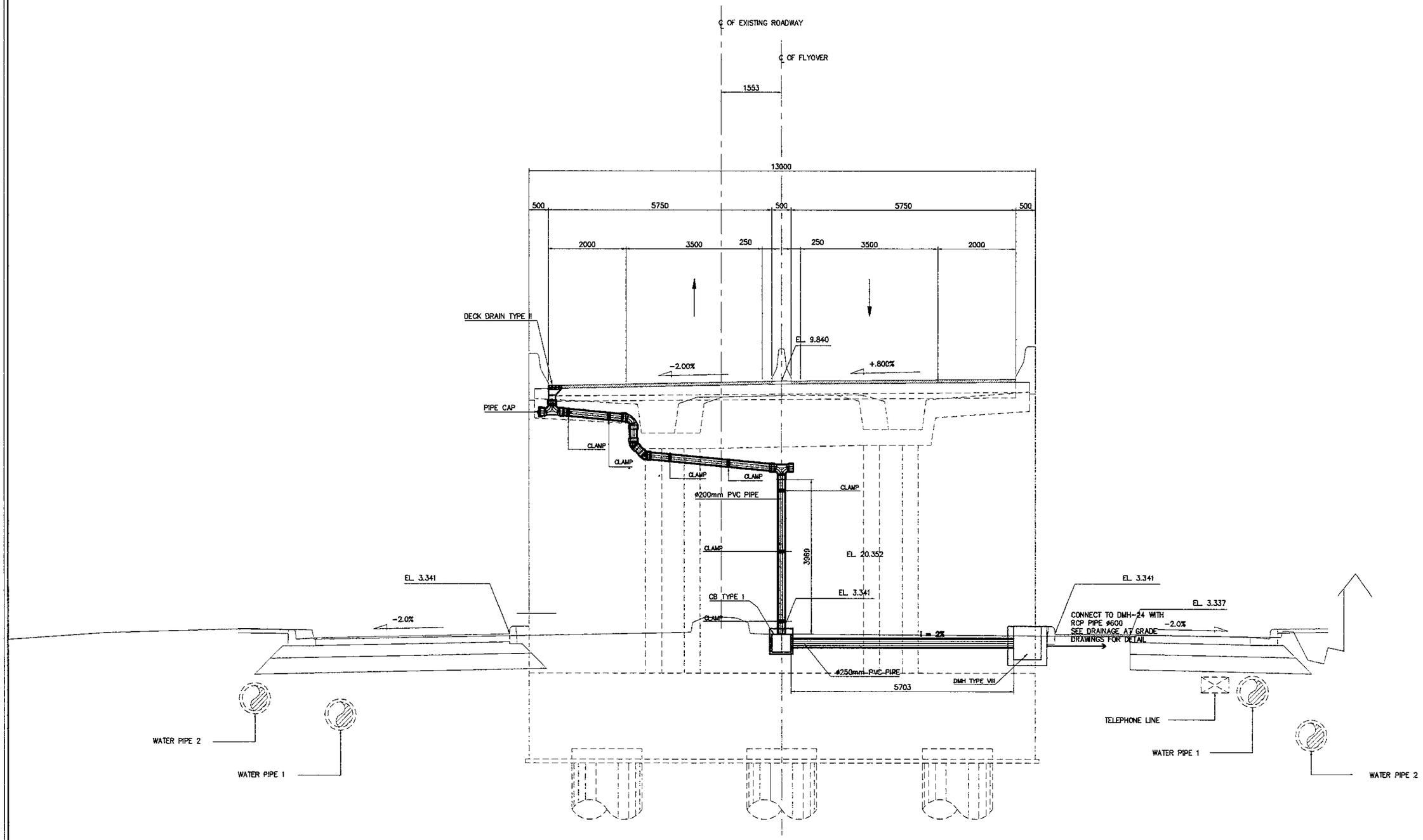

1 / - A2 SECTION (STA. 0 + 742.00)
SCALE 1:100

JICA JAPAN INTERNATIONAL COOPERATION AGENCY / KEI KATAHIRA & ENGINEERS INTERNATIONAL	DESIGNED BY	CHECKED BY	SUBMITTED BY	REPUBLIC OF INDONESIA MINISTRY OF PUBLIC WORKS DIRECTORATE GENERAL OF HIGHWAYS	PROJECT AND LOCATION :	SCALE :	DRAWING TITLE :	DRAWING NO :
	Name: R. UENO	Name: T. OKUMURA	Name: M. KIUCHI		DETAILED DESIGN STUDY OF NORTH JAVA CORRIDOR FLYOVER PROJECT TANGGULANGIN FLYOVER - CONTRACT PACKAGE 3 (PETERONGAN -TANGGULANGIN) EAST JAVA PROVINCE	1 : 10 1 : 20 1 : 50 1 : 60	DRAINAGE CATCH BASIN DETAILS	TDV-019
	Sign	Sign	Sign	APPROVED BY: Ir. HERRY VAZA M.Eng.Sc, NIP. : 110038400				SHEET NO : 19 / 31
	Date	Date	Date	Sign / Date		FULL SIZE A3		

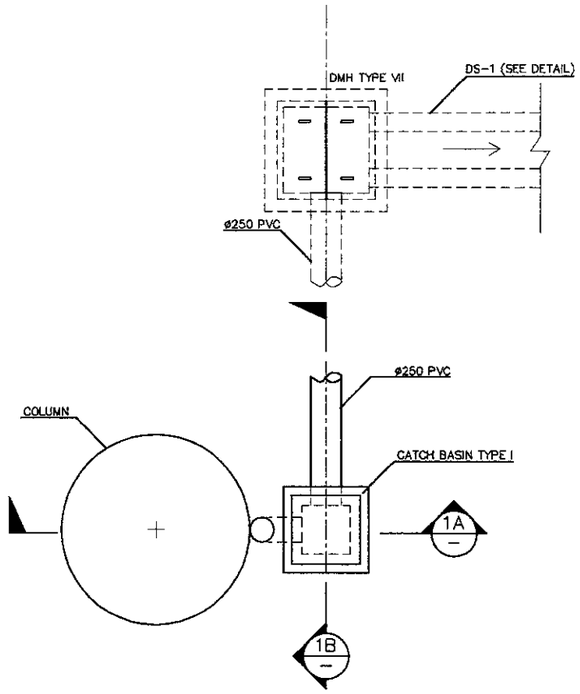

1 PARTIAL PLAN (TYPICAL) SCALE 1:50

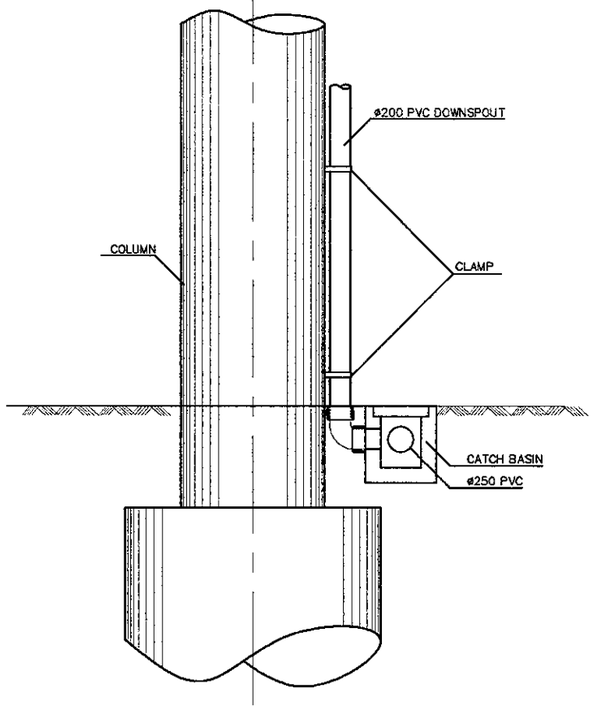

1A SECTION SCALE 1:60

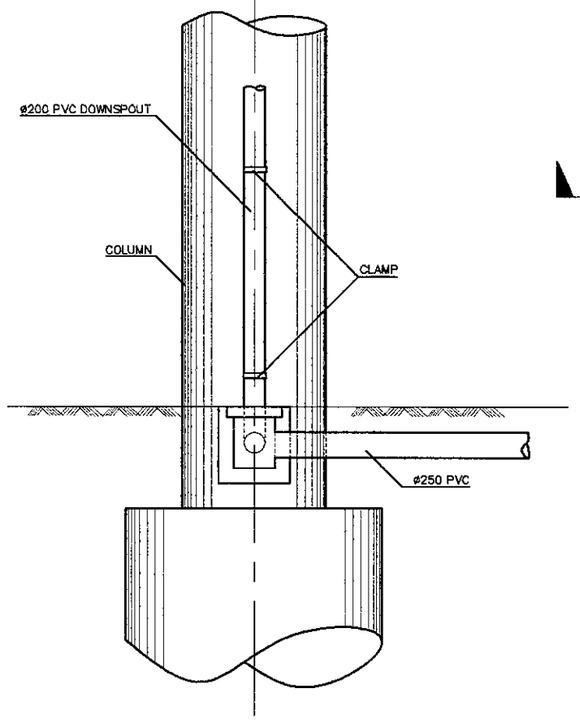

1B SECTION SCALE 1:60

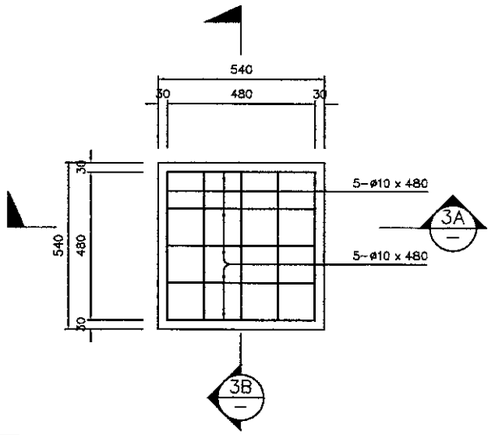

3 PLAN OF CONCRETE COVER FOR CATCH BASIN SCALE 1:20

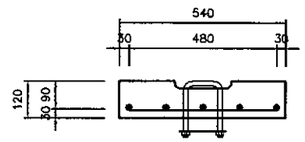

3A SECTION SCALE 1:20

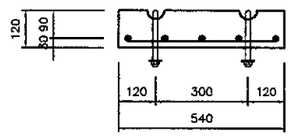

3B SECTION SCALE 1:20

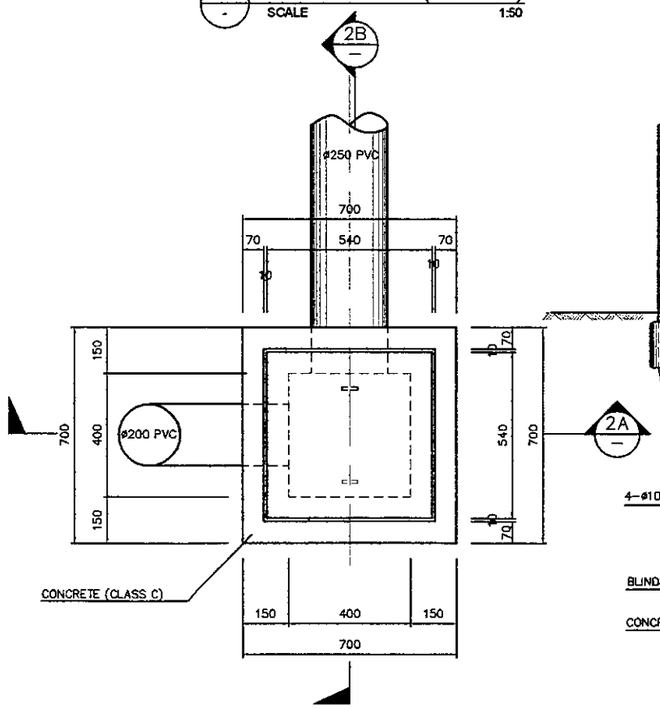

2 PLAN SCALE 1:20

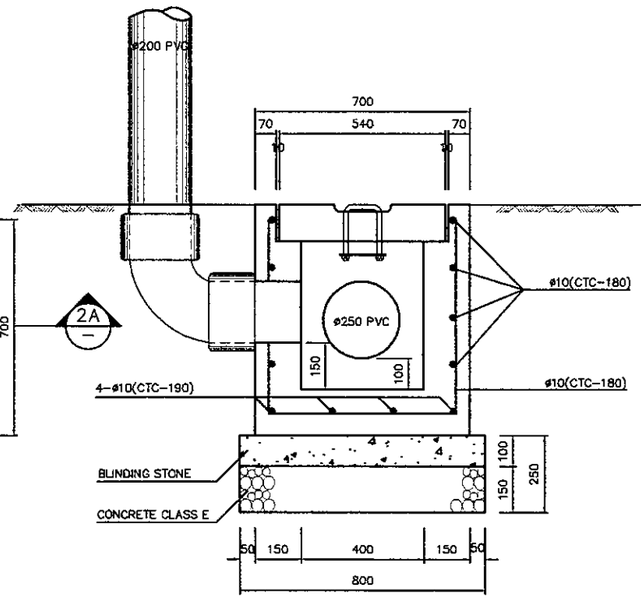

2A SECTION SCALE 1:20

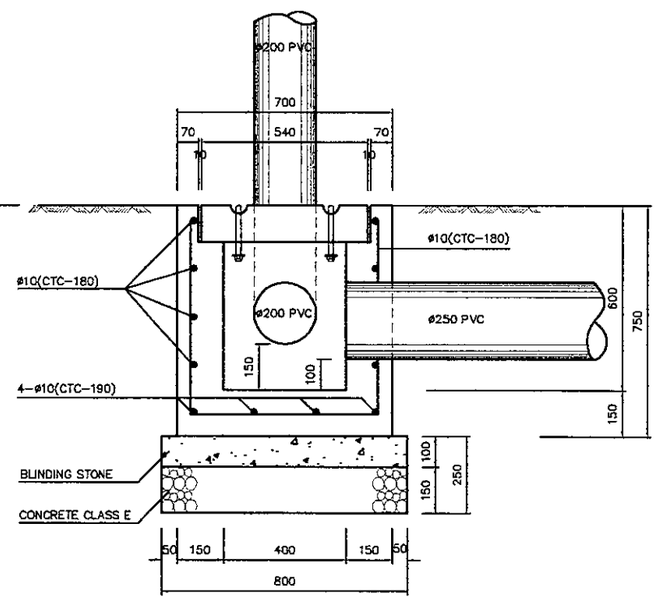

2B SECTION SCALE 1:20

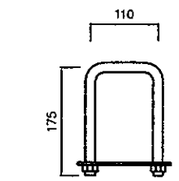

4 ELEVATION SCALE 1:10

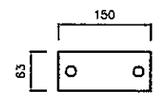

5 PLAN IRON DETAIL SCALE 1:10

JAPAN INTERNATIONAL COOPERATION AGENCY / KATAHIRA & ENGINEERS INTERNATIONAL	DESIGNED BY	CHECKED BY	SUBMITTED BY	REPUBLIC OF INDONESIA MINISTRY OF PUBLIC WORKS DIRECTORATE GENERAL OF HIGHWAYS	PROJECT AND LOCATION :	SCALE :	DRAWING TITLE :	DRAWING NO :
	Name: R. UENO	Name: T. OKUMURA	Name: M. KIUCHI		DETAILED DESIGN STUDY OF NORTH JAVA CORRIDOR FLYOVER PROJECT TANGGULANGIN FLYOVER - CONTRACT PACKAGE 3 (PETERONGAN -TANGGULANGIN) EAST JAVA PROVINCE	1 : 10 1 : 20 1 : 50	DRAINAGE DETAILS OF MANHOLE TYPE - VII	TDV-020
	Sign	Sign	Sign	APPROVED BY: Ir. HERRY VAZA M.Eng.Sc NIP. : 110038400				SHEET NO : 20 / 31
	Date	Date	Date	Sign / Date		FULL SIZE A3		

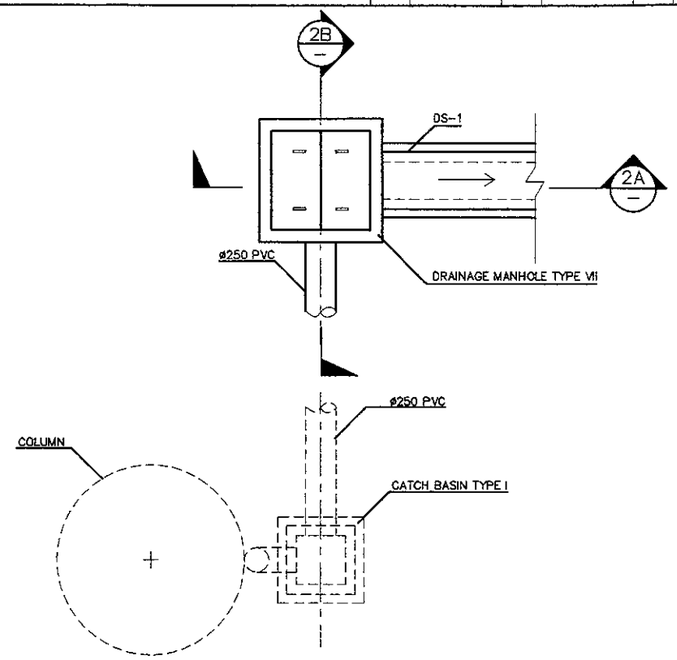

1 PARTIAL PLAN (TYPICAL)
SCALE 1:50

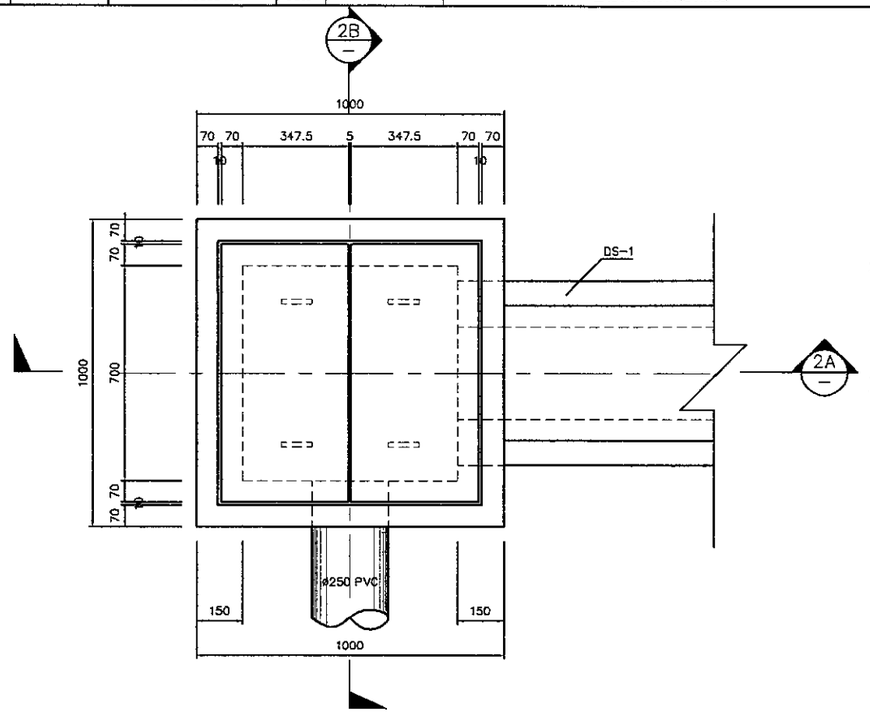

2 PLAN
SCALE 1:20

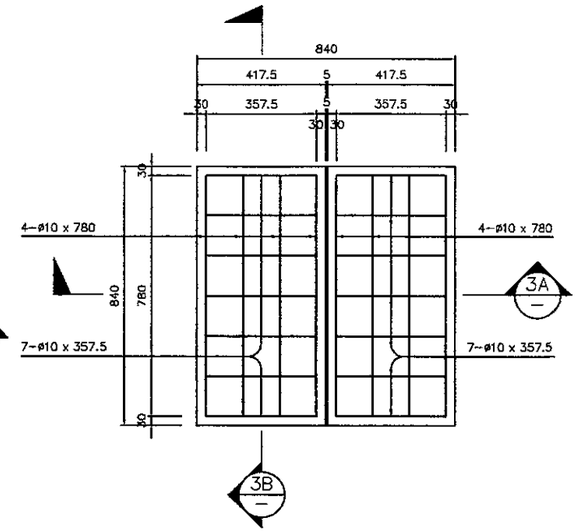

3 PLAN
SCALE 1:20

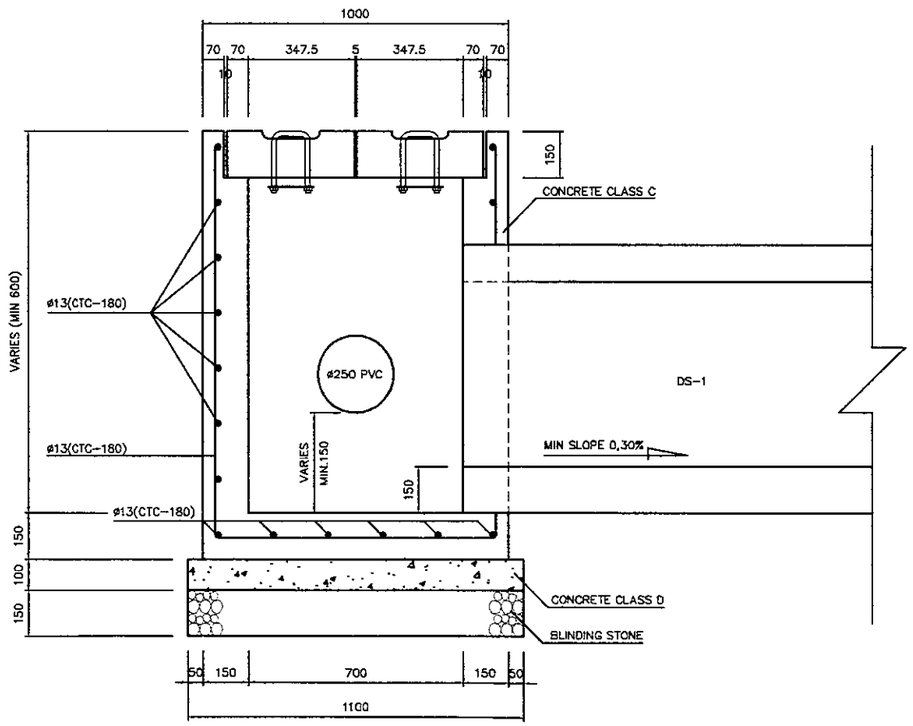

2A SECTION
SCALE 1:20

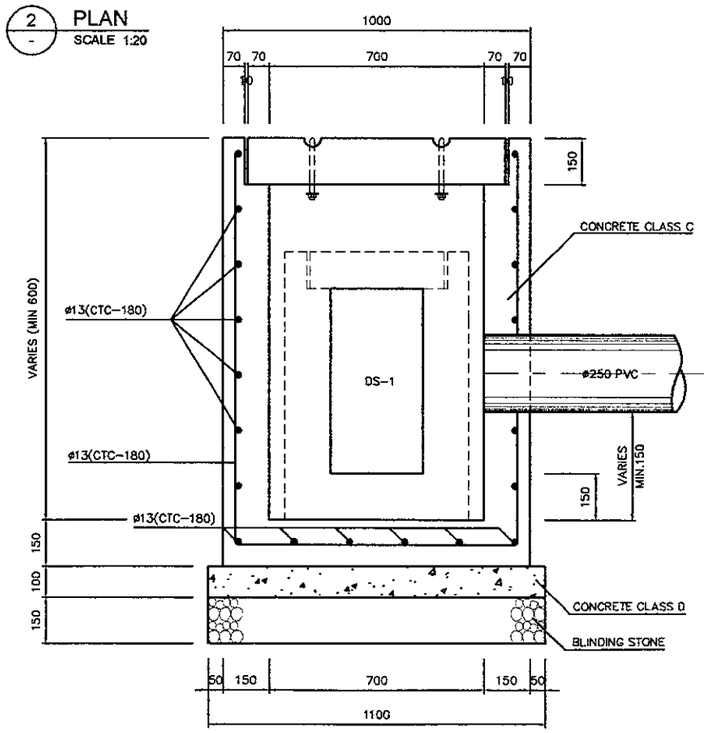

2B SECTION
SCALE 1:20

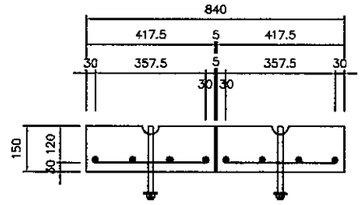

3A SECTION
SCALE 1:20

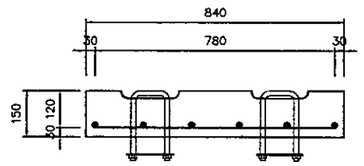

3B SECTION
SCALE 1:20

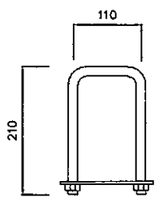

3C ELEVATION
SCALE 1:10

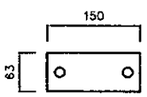

3D PLAN IRON DETAIL
SCALE 1:10