| JAPAN INTERNATIONAL COOPERATION AGENCY<br>KATAHIRA & ENGINEERS INTERNATIONAL | DESIGNED BY | CHECKED BY | SUBMITTED BY | REPUBLIC OF INDONESIA<br>MINISTRY OF PUBLIC WORKS<br>DIRECTORATE GENERAL OF HIGHWAYS | PROJECT AND LOCATION : | SCALE : | DRAWING TITLE : | DRAWING NO : |
|---|---|---|---|---|---|---|---|---|
| | Name: R. UENO | Name: T. OKUMURA | Name: M. KIUCHI | | DETAILED DESIGN STUDY OF<br>NORTH JAVA CORRIDOR FLYOVER PROJECT<br>TANGGULANGIN FLYOVER - CONTRACT PACKAGE 3<br>( PETERONGAN -TANGGULANGIN )<br>EAST JAVA PROVINCE | 1 : 200 | CROSS SECTION<br>STA. 0 + 440.000 - STA. 0 + 500.000<br>(4 OF 12) | TRD-031 |
| | Sign | Sign | Sign | APPROVED BY: Ir. HERRY VAZA M,Eng.Sc<br>NIP. : 110038400 | | | | SHEET NO : |
| | Date | Date | Date | Sign / Date | | FULL SIZE A3 | | 31 / 62 |

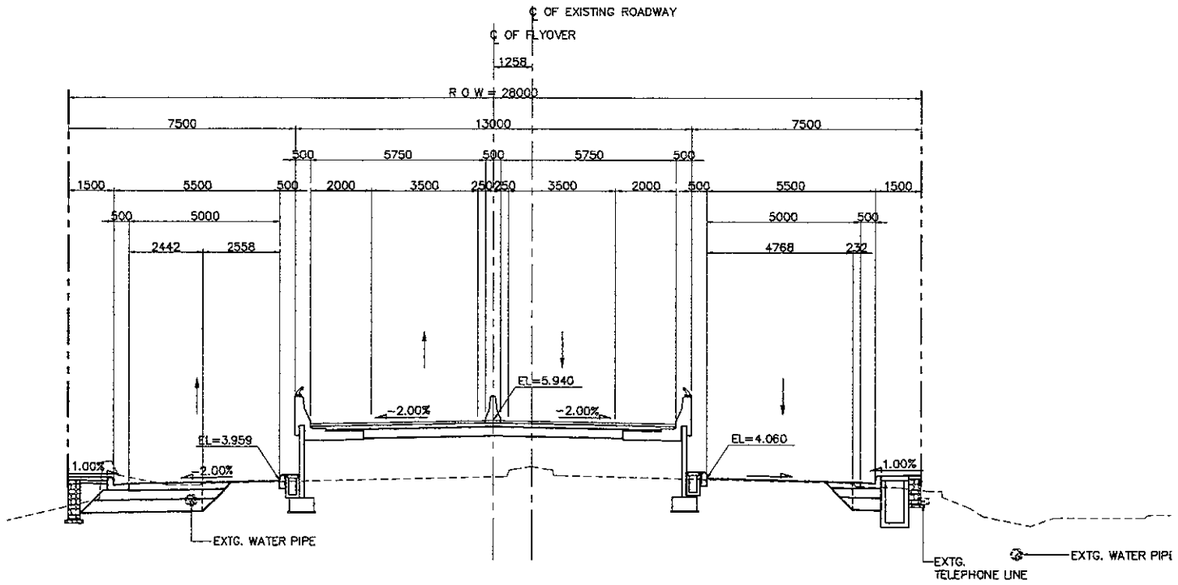


2 - SECTION (STA. 0 + 460.000)
SCALE 1:200

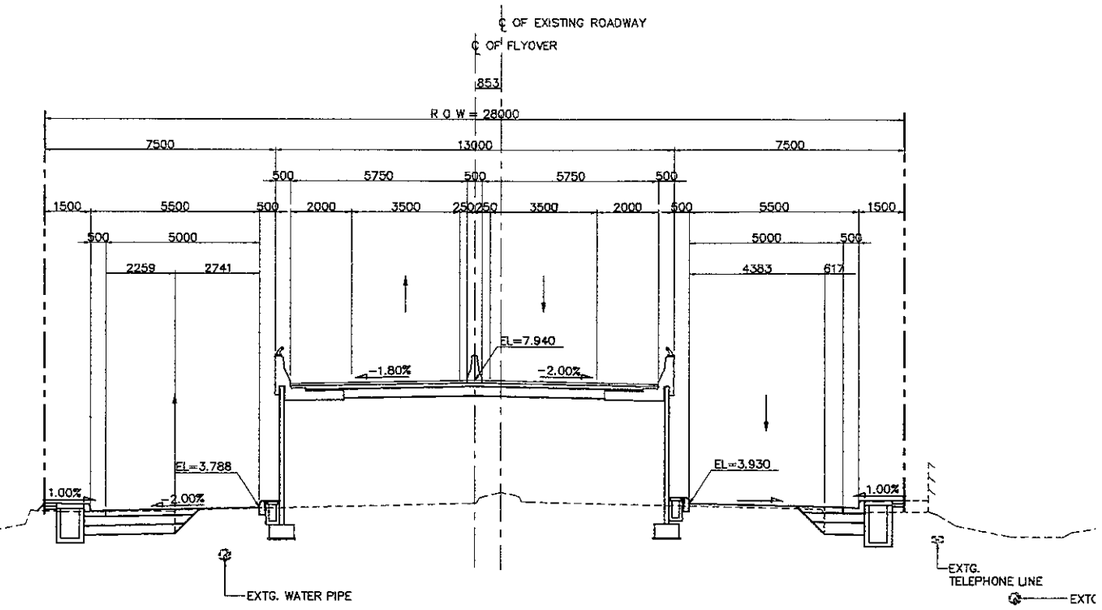


4 - SECTION (STA. 0 + 500.000)
SCALE 1:200

NOTES:

1. ALL DIMENSIONS AND ELEVATIONS SHALL BE VERIFIED DURING CONSTRUCTION.
2. LOCATION OF EXISTING UTILITIES SHALL BE VERIFIED PRIOR TO CONSTRUCTION.
3. FOR LOCATION AND INVERT ELEVATIONS OF DRAINAGE SYSTEM (DITCH AND RCP) REFER TO DRAINAGE DRAWINGS.

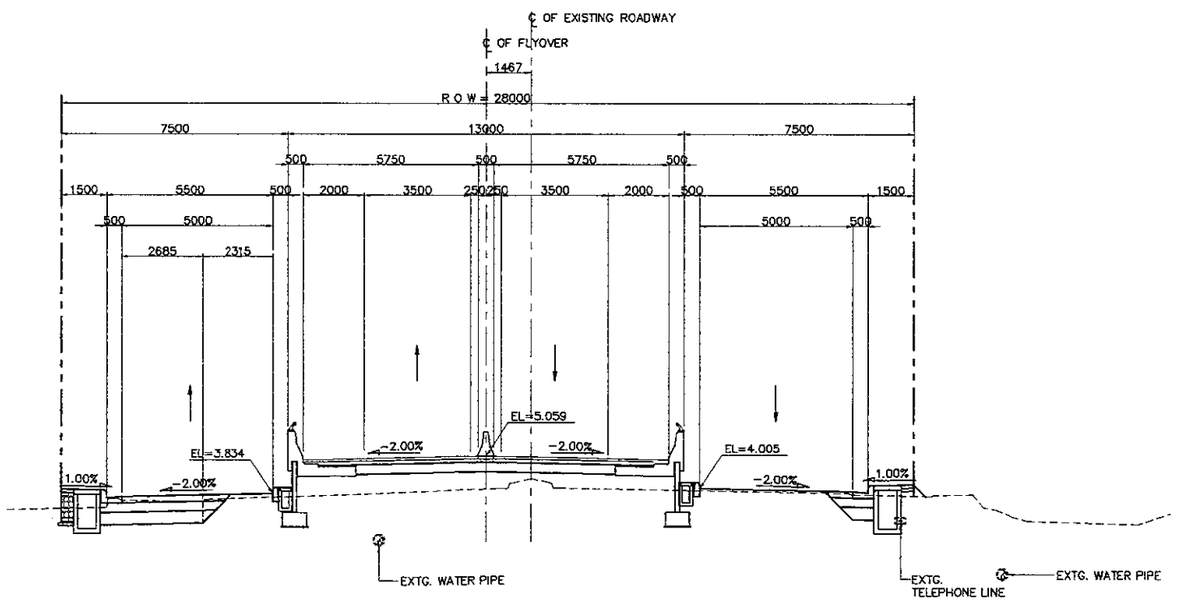


1 - SECTION (STA. 0 + 440.000)
SCALE 1:200

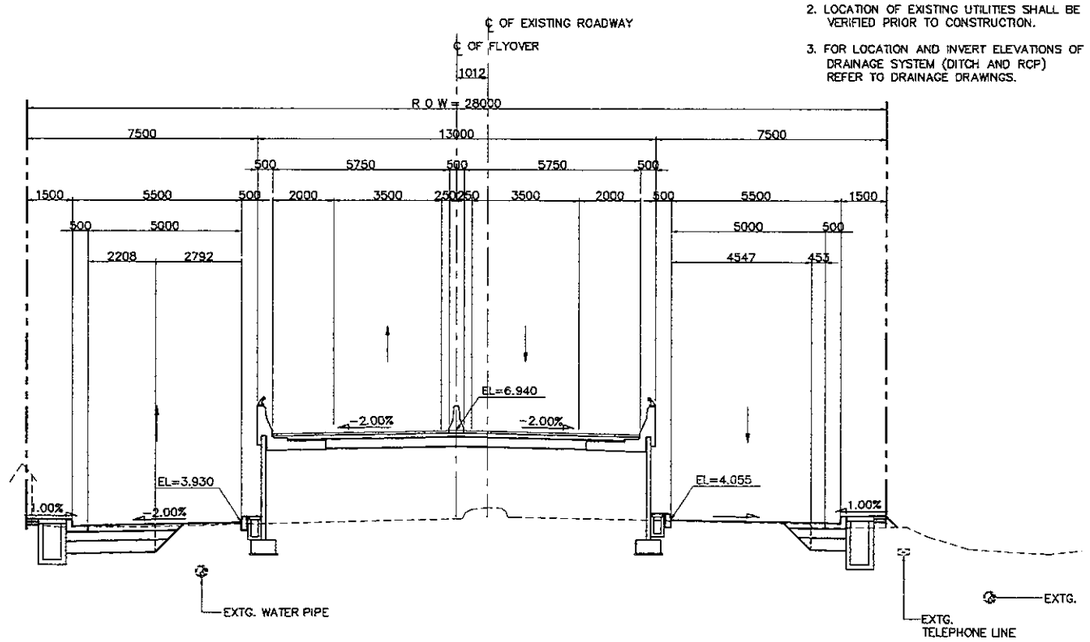


3 - SECTION (STA. 0 + 480.000)
SCALE 1:200

| JICA JAPAN INTERNATIONAL COOPERATION AGENCY / KEI KATAHIRA & ENGINEERS INTERNATIONAL | DESIGNED BY | CHECKED BY | SUBMITTED BY | REPUBLIC OF INDONESIA MINISTRY OF PUBLIC WORKS DIRECTORATE GENERAL OF HIGHWAYS | PROJECT AND LOCATION : | SCALE : | DRAWING TITLE : | DRAWING NO : |
|---|---|---|---|---|---|---|---|---|
| | Name: R. UENO | Name: T. OKUMURA | Name: M. KIUCHI | | DETAILED DESIGN STUDY OF NORTH JAVA CORRIDOR FLYOVER PROJECT TANGGULANGIN FLYOVER - CONTRACT PACKAGE 3 ( PETERONGAN -TANGGULANGIN ) EAST JAVA PROVINCE | 1 : 200 | CROSS SECTION STA. 0 + 520.000 - STA. 0 + 580.000 (5 OF 12) | TRD-032 |
| | Sign | Sign | Sign | APPROVED BY: Ir. HERRY VAZA M,Eng.Sc NIP. : 110038400 | | FULL SIZE A3 | | SHEET NO : 32 / 62 |
| | Date | Date | Date | Sign / Date | | | | |

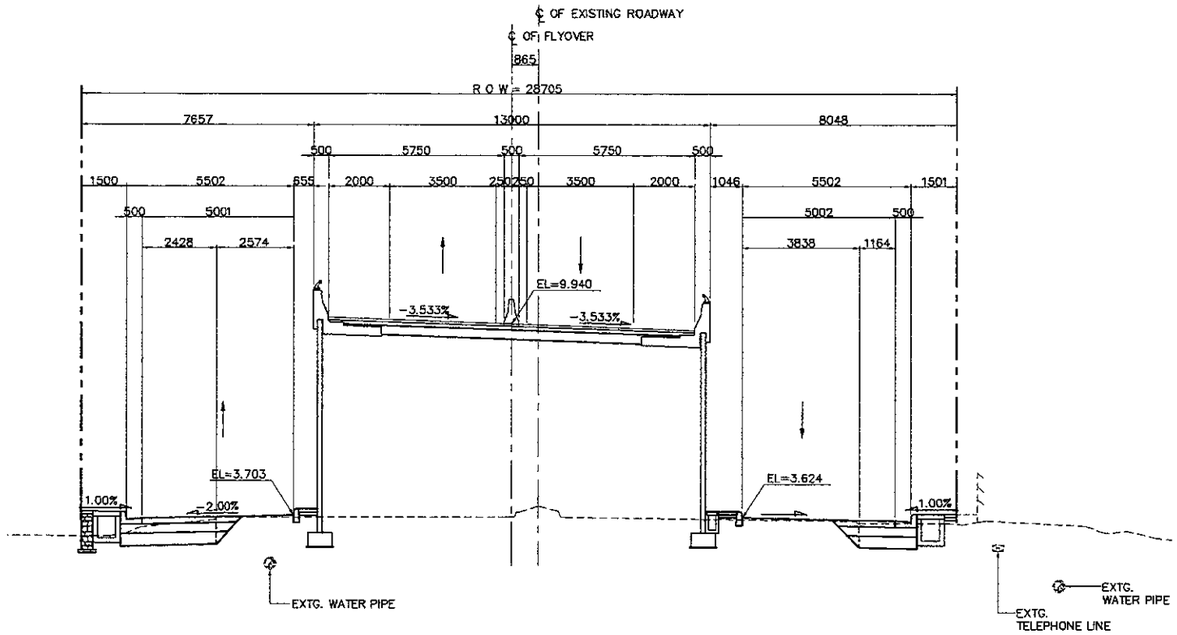


2 SECTION (STA. 0 + 540.000)
SCALE 1:200

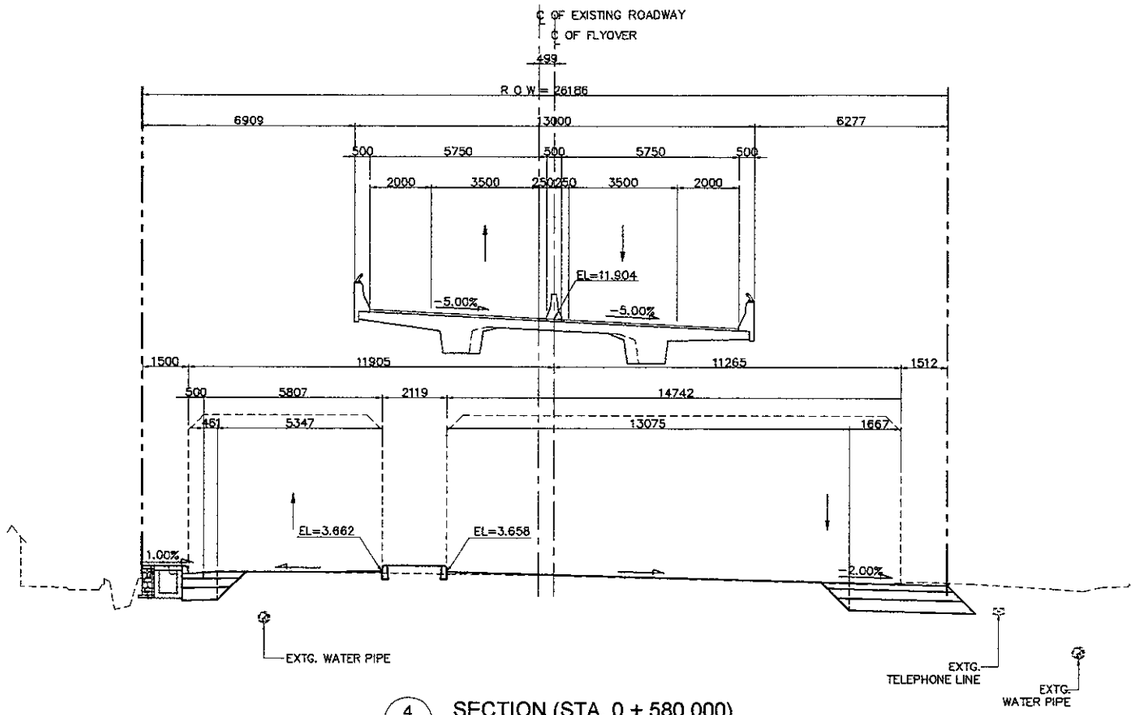


4 SECTION (STA. 0 + 580.000)
SCALE 1:200

NOTES:

1. ALL DIMENSIONS AND ELEVATIONS SHALL BE VERIFIED DURING CONSTRUCTION.
2. LOCATION OF EXISTING UTILITIES SHALL BE VERIFIED PRIOR TO CONSTRUCTION.
3. FOR LOCATION AND INVERT ELEVATIONS OF DRAINAGE SYSTEM (DITCH AND RCP) REFER TO DRAINAGE DRAWINGS.

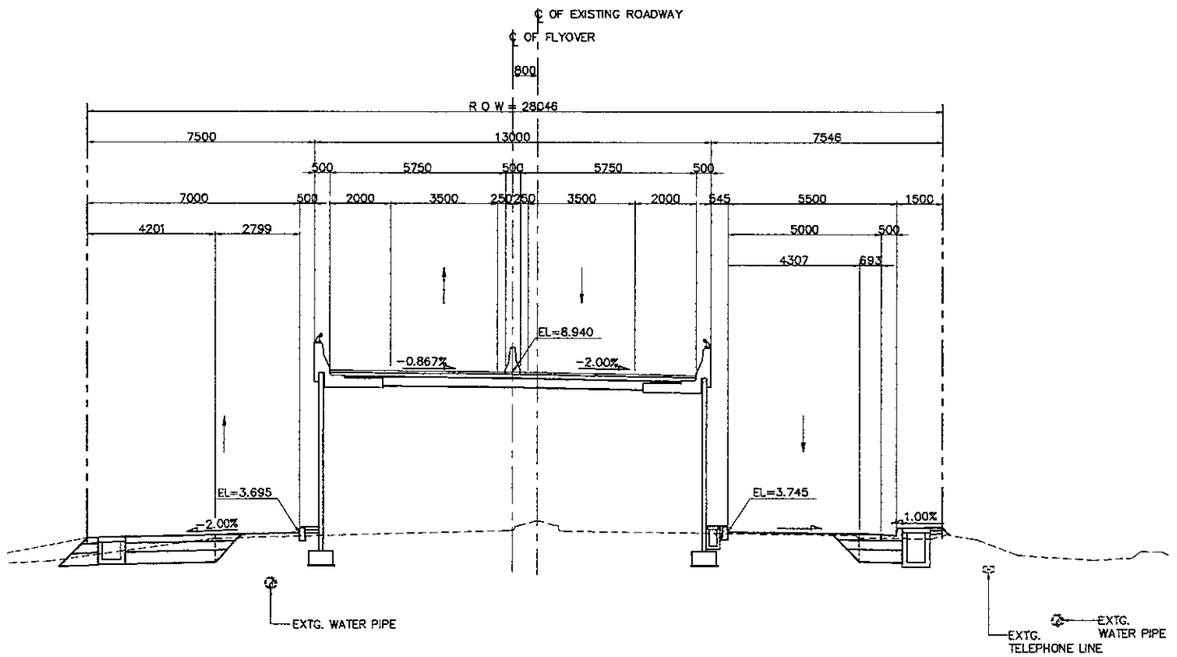


1 SECTION (STA. 0 + 520.000)
SCALE 1:200

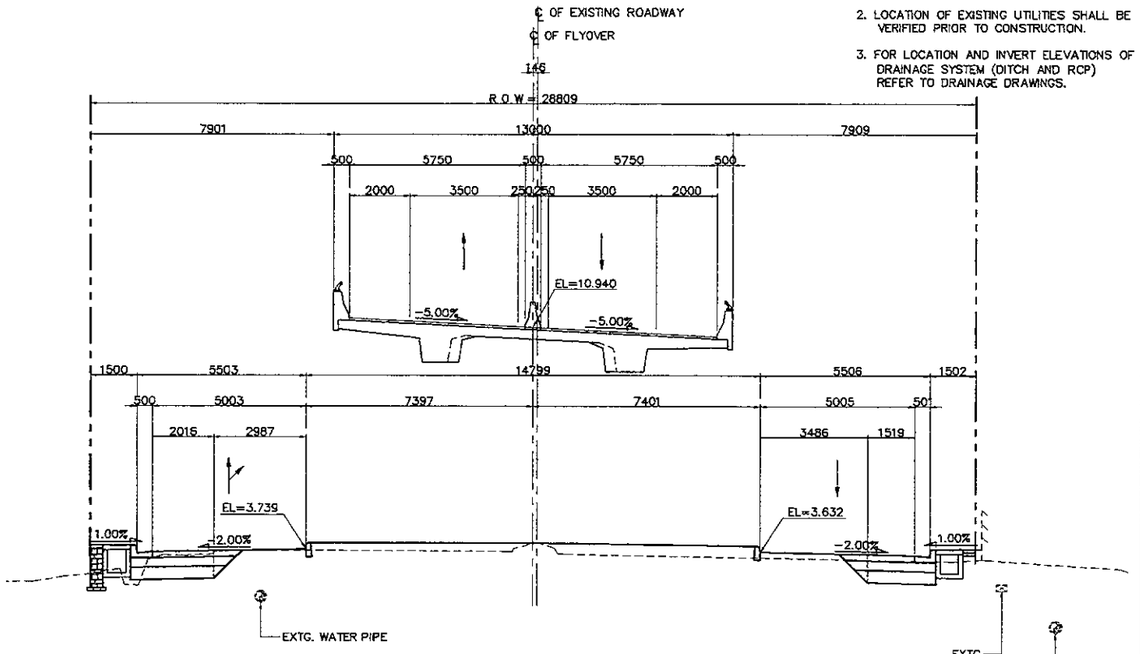


3 SECTION (STA. 0 + 560.000)
SCALE 1:200

| JICA JAPAN INTERNATIONAL COOPERATION AGENCY / KEI KATAHIRA & ENGINEERS INTERNATIONAL | DESIGNED BY | CHECKED BY | SUBMITTED BY | REPUBLIC OF INDONESIA MINISTRY OF PUBLIC WORKS DIRECTORATE GENERAL OF HIGHWAYS | PROJECT AND LOCATION : | SCALE : | DRAWING TITLE : | DRAWING NO : |
|---|---|---|---|---|---|---|---|---|
| | Name: R. UENO | Name: T. OKUMURA | Name: M. KIUCHI | | DETAILED DESIGN STUDY OF NORTH JAVA CORRIDOR FLYOVER PROJECT TANGGULANGIN FLYOVER - CONTRACT PACKAGE 3 ( PETERONGAN -TANGGULANGIN ) EAST JAVA PROVINCE | 1 : 200 | CROSS SECTION STA. 0 + 600.000 - STA. 0 + 660.000 (6 OF 12) | TRD-033 |
| | Sign | Sign | Sign | APPROVED BY: Ir. HERRY VAZA M,Eng.Sc NIP. : 110038400 | | FULL SIZE A3 | | SHEET NO : 33 / 62 |
| | Date | Date | Date | Sign / Date | | | | |

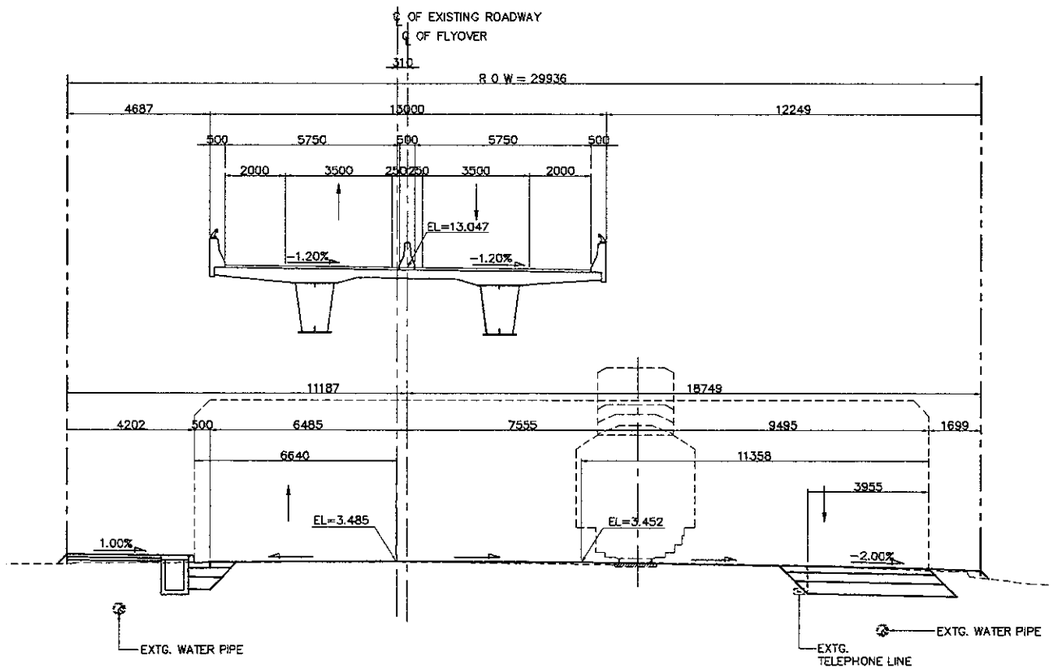


2 - SECTION (STA. 0 + 620.000)
SCALE 1:200

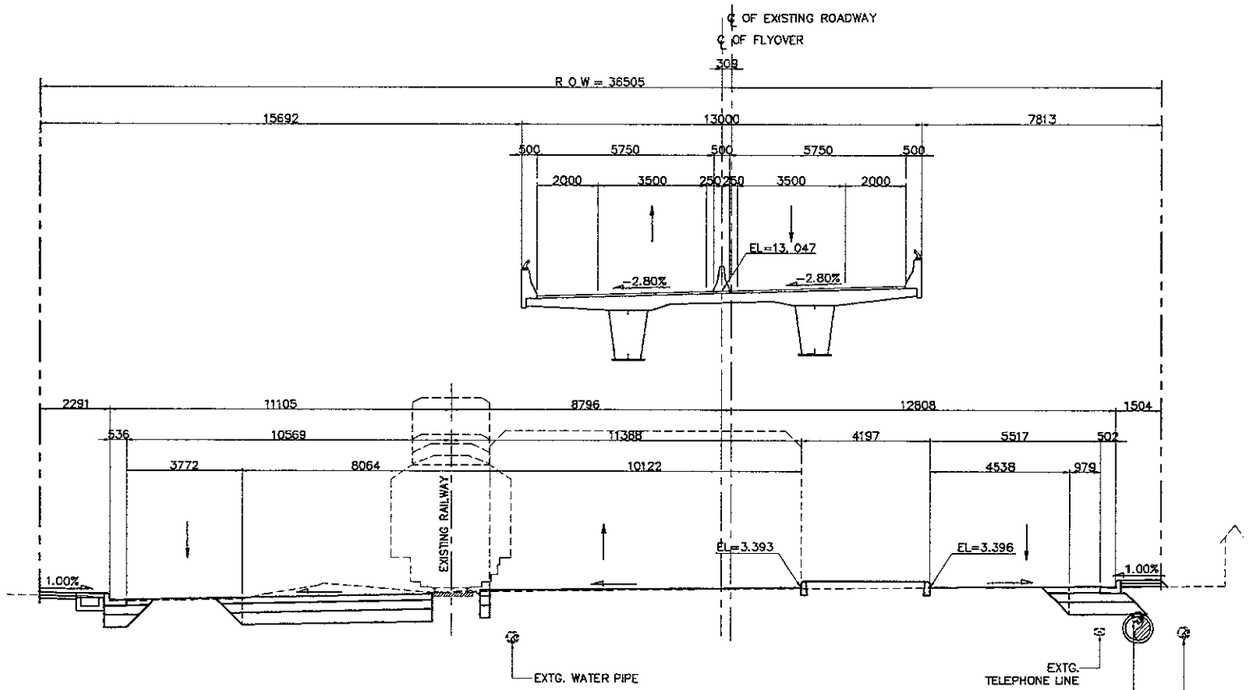


4 - SECTION (STA. 0 + 660.000)
SCALE 1:200

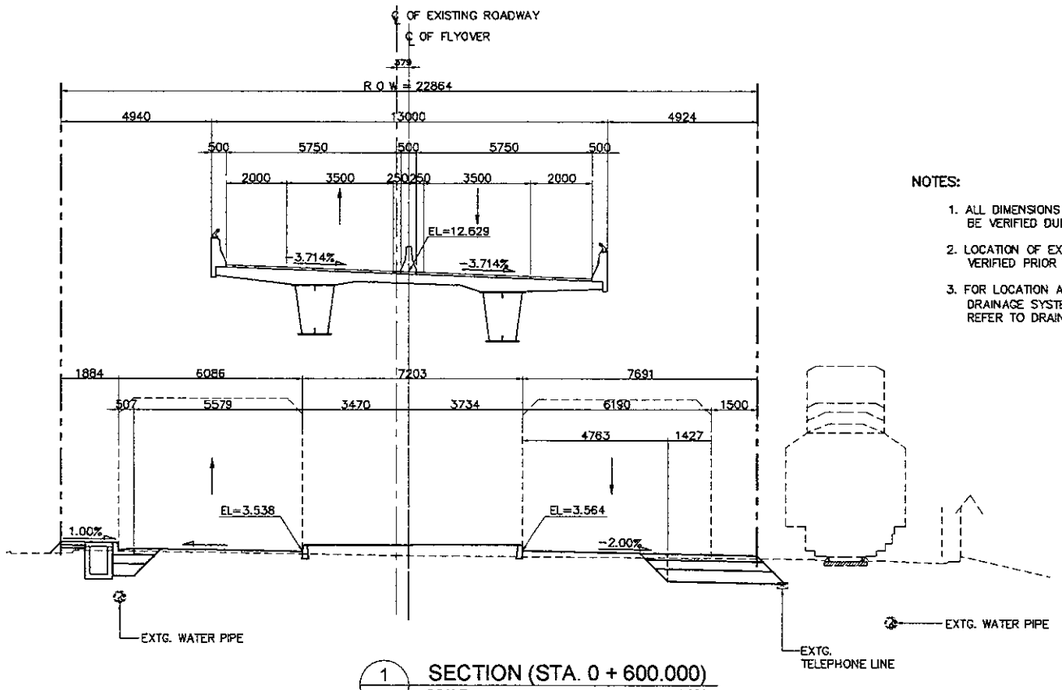


1 - SECTION (STA. 0 + 600.000)
SCALE 1:200

NOTES:

1. ALL DIMENSIONS AND ELEVATIONS SHALL BE VERIFIED DURING CONSTRUCTION.
2. LOCATION OF EXISTING UTILITIES SHALL BE VERIFIED PRIOR TO CONSTRUCTION.
3. FOR LOCATION AND INVERT ELEVATIONS OF DRAINAGE SYSTEM (DITCH AND RCP) REFER TO DRAINAGE DRAWINGS.

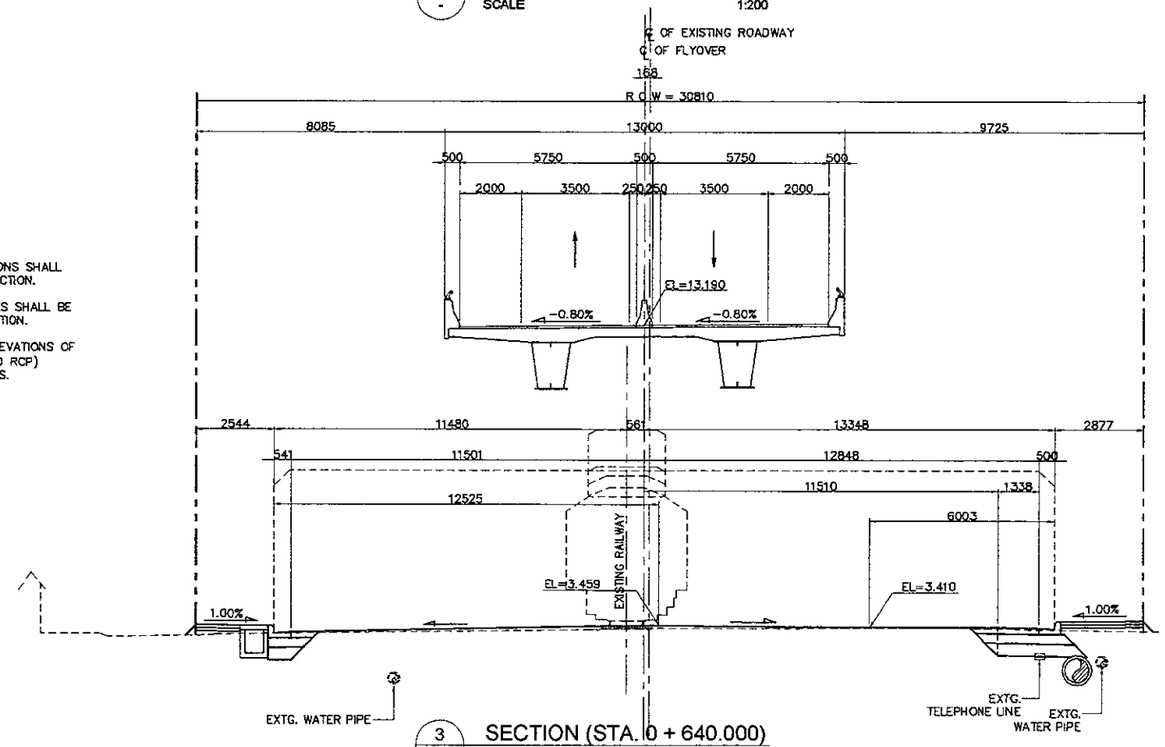


3 - SECTION (STA. 0 + 640.000)
SCALE 1:200

| JAPAN INTERNATIONAL COOPERATION AGENCY<br>KATAHIRA & ENGINEERS INTERNATIONAL | DESIGNED BY | CHECKED BY | SUBMITTED BY | REPUBLIC OF INDONESIA<br>MINISTRY OF PUBLIC WORKS<br>DIRECTORATE GENERAL OF HIGHWAYS | PROJECT AND LOCATION : | SCALE : | DRAWING TITLE : | DRAWING NO : |
|---|---|---|---|---|---|---|---|---|
| | Name: R. UENO | Name: T. OKUMURA | Name: M. KIUCHI | | DETAILED DESIGN STUDY OF<br>NORTH JAVA CORRIDOR FLYOVER PROJECT<br>TANGGULANGIN FLYOVER - CONTRACT PACKAGE 3<br>( PETERONGAN -TANGGULANGIN )<br>EAST JAVA PROVINCE | 1 : 200 | CROSS SECTION<br>STA. 0 + 680.000 - STA. 0 + 740.000<br>(7 OF 12) | TRD-034 |
| | Sign | Sign | Sign | | | | | SHEET NO : |
| | Date | Date | Date | APPROVED BY: Ir. HERRY VAZA M.Eng.Sc<br>NIP. : 110038400 | | FULL SIZE A3 | | 34 / 62 |

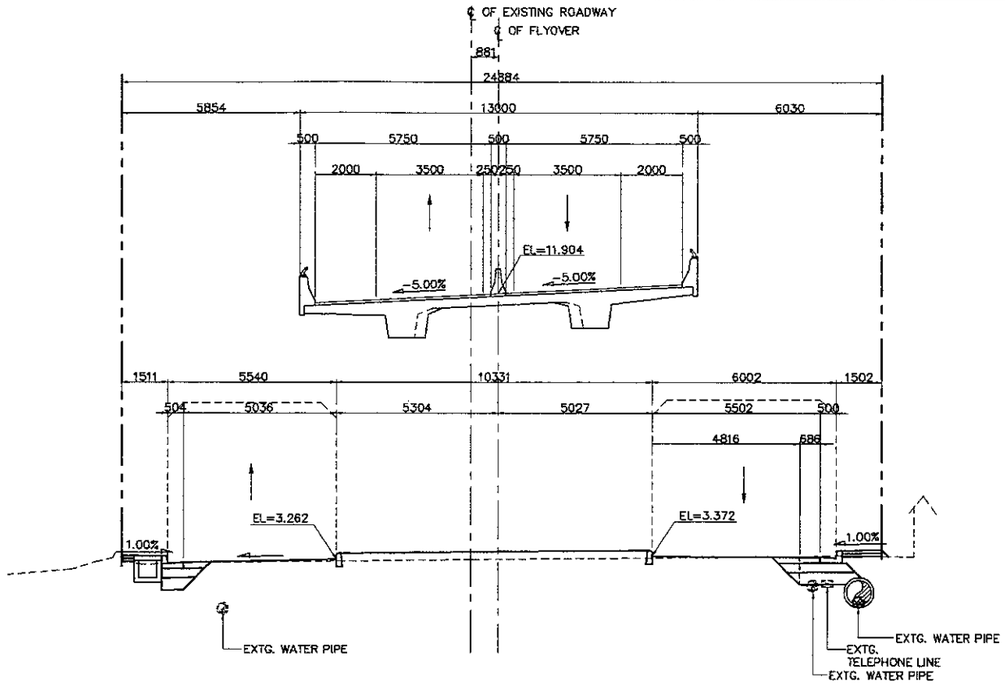


2 SECTION (STA. 0 + 700.000)
SCALE 1:200

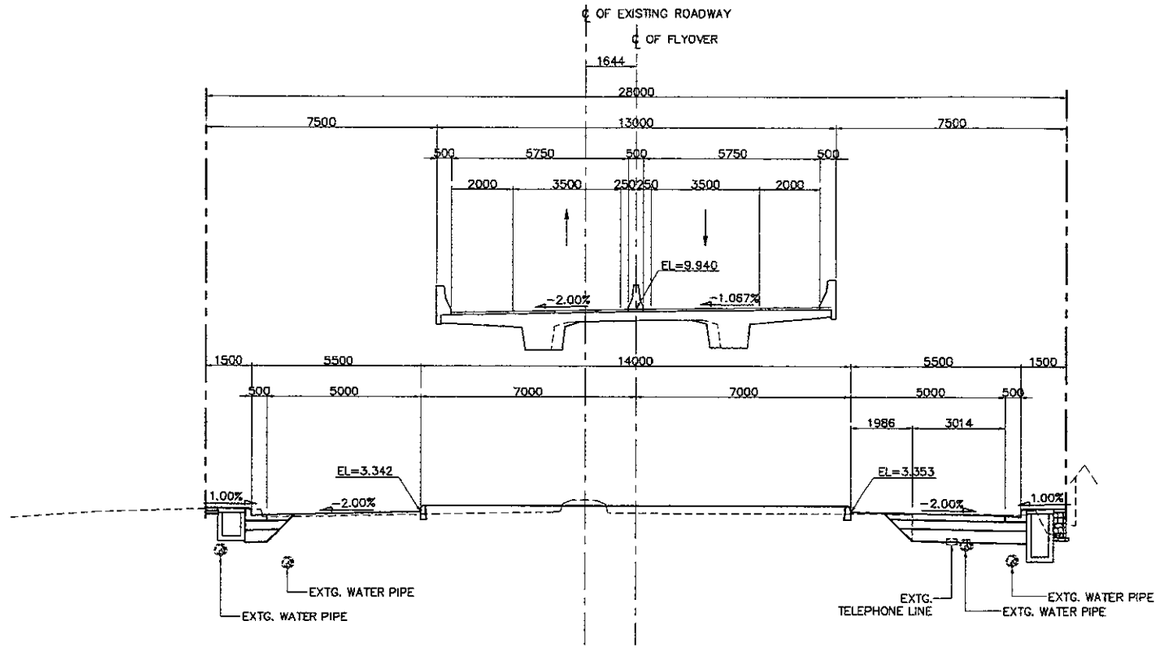


4 SECTION (STA. 0 + 740.000)
SCALE 1:200

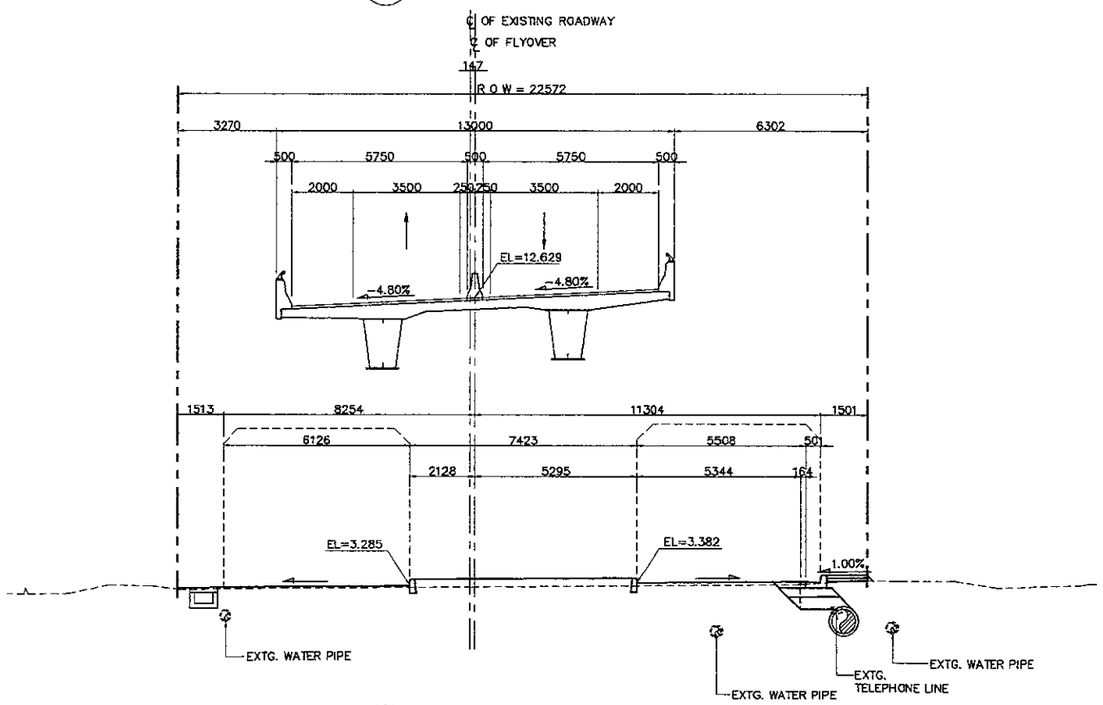


1 SECTION (STA. 0 + 680.000)
SCALE 1:200

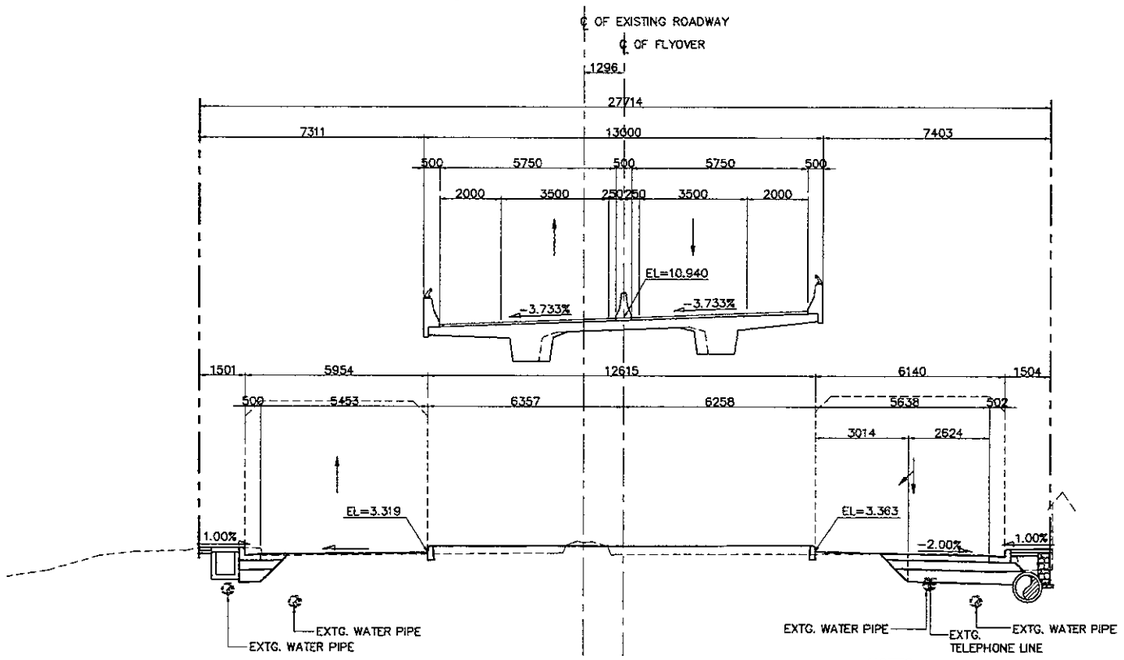


3 SECTION (STA. 0 + 720.000)
SCALE 1:200

NOTES:

1. ALL DIMENSIONS AND ELEVATIONS SHALL BE VERIFIED DURING CONSTRUCTION.
2. LOCATION OF EXISTING UTILITIES SHALL BE VERIFIED PRIOR TO CONSTRUCTION.
3. FOR LOCATION AND INVERT ELEVATIONS OF DRAINAGE SYSTEM (DITCH AND RCP) REFER TO DRAINAGE DRAWINGS.

| JAPAN INTERNATIONAL COOPERATION AGENCY<br>KATAHIRA & ENGINEERS INTERNATIONAL | DESIGNED BY | CHECKED BY | SUBMITTED BY | REPUBLIC OF INDONESIA<br>MINISTRY OF PUBLIC WORKS<br>DIRECTORATE GENERAL OF HIGHWAYS | PROJECT AND LOCATION : | SCALE : | DRAWING TITLE : | DRAWING NO : |
|---|---|---|---|---|---|---|---|---|
| | Name: R. UENO | Name: T. OKUMURA | Name: M. KIUCHI | | DETAILED DESIGN STUDY OF<br>NORTH JAVA CORRIDOR FLYOVER PROJECT<br>TANGGULANGIN FLYOVER - CONTRACT PACKAGE 3<br>( PETERONGAN -TANGGULANGIN )<br>EAST JAVA PROVINCE | 1 : 200 | CROSS SECTION<br>STA. 0 + 760.000 - STA. 0 + 820.000<br>(8 OF 12) | TRD-035 |
| | Sign | Sign | Sign | APPROVED BY: Ir. HERRY VAZA M,Eng.Sc<br>NIP. : 110038400 | | | | SHEET NO : |
| | Date | Date | Date | Sign / Date | | FULL SIZE A3 | | 35 / 62 |

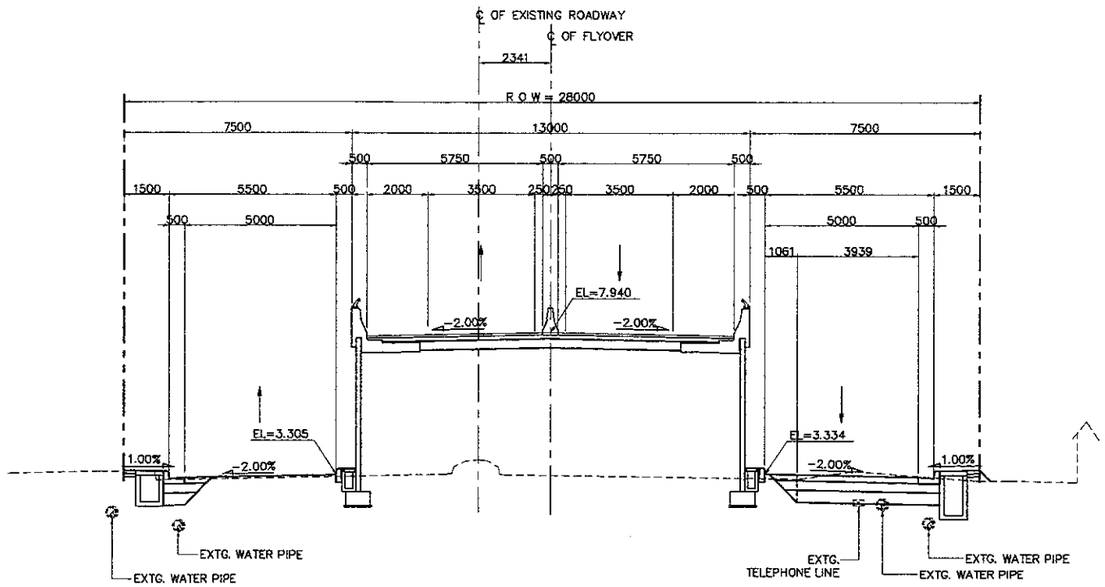


2 SECTION (STA. 0 + 780.000)
SCALE 1:200

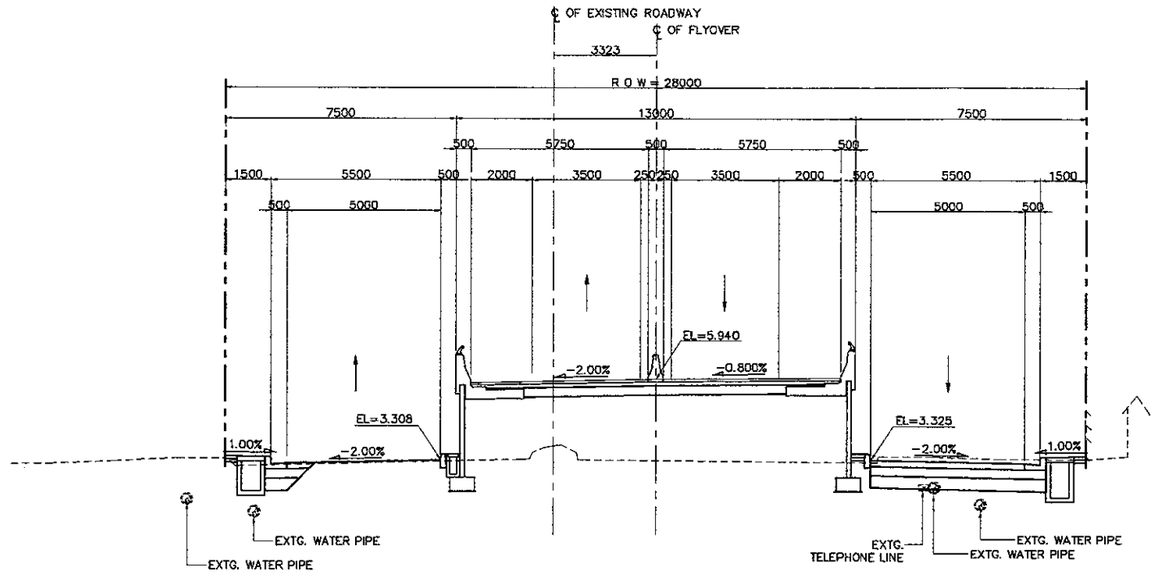


4 SECTION (STA. 0 + 820.000)
SCALE 1:200

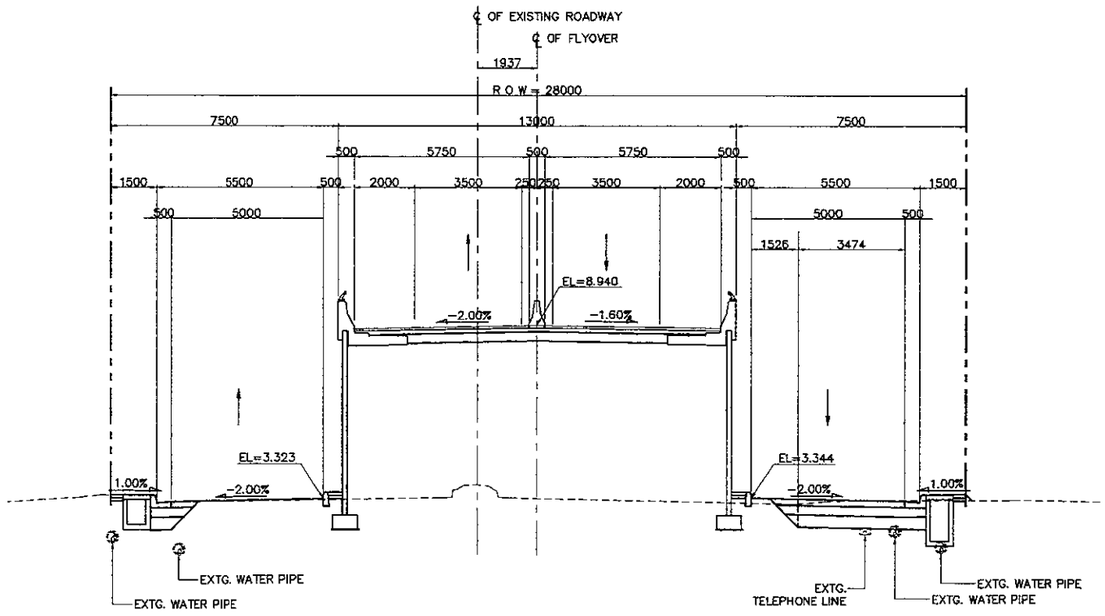


1 SECTION (STA. 0 + 760.000)
SCALE 1:200

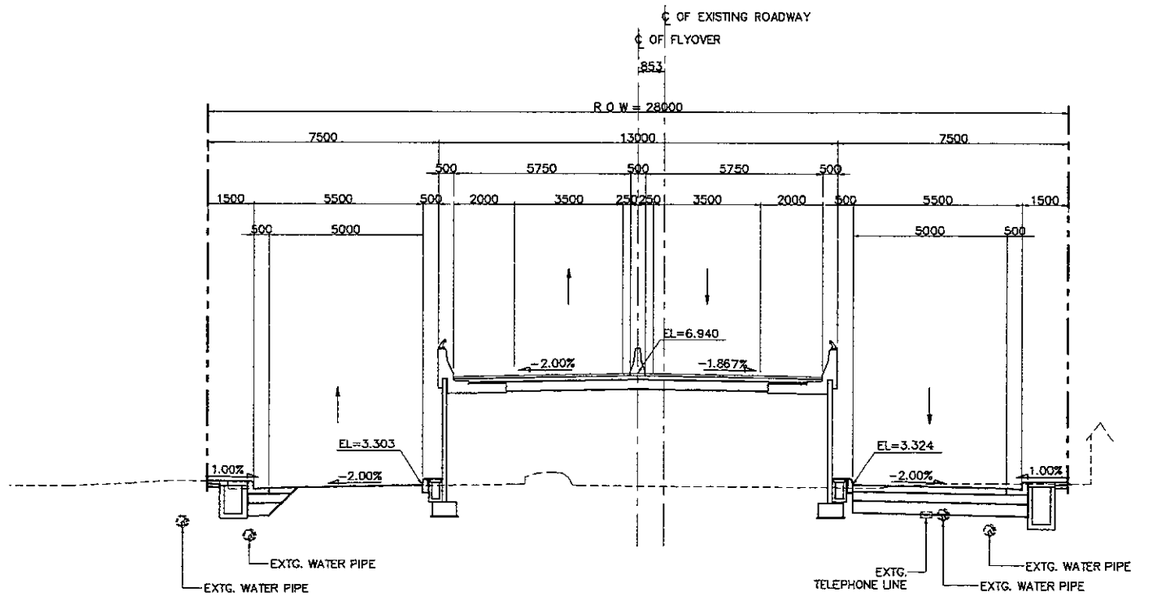


3 SECTION (STA. 0 + 800.000)
SCALE 1:200

NOTES:

1. ALL DIMENSIONS AND ELEVATIONS SHALL BE VERIFIED DURING CONSTRUCTION.
2. LOCATION OF EXISTING UTILITIES SHALL BE VERIFIED PRIOR TO CONSTRUCTION.
3. FOR LOCATION AND INVERT ELEVATIONS OF DRAINAGE SYSTEM (DITCH AND RCP) REFER TO DRAINAGE DRAWINGS.

| JICA JAPAN INTERNATIONAL COOPERATION AGENCY / KEI KATAHIRA & ENGINEERS INTERNATIONAL | DESIGNED BY | CHECKED BY | SUBMITTED BY | REPUBLIC OF INDONESIA MINISTRY OF PUBLIC WORKS DIRECTORATE GENERAL OF HIGHWAYS | PROJECT AND LOCATION : | SCALE : | DRAWING TITLE : | DRAWING NO : |
|---|---|---|---|---|---|---|---|---|
| | Name R. UENO | Name T. OKUMURA | Name M. KIUCHI | | DETAILED DESIGN STUDY OF NORTH JAVA CORRIDOR FLYOVER PROJECT TANGGULANGIN FLYOVER - CONTRACT PACKAGE 3 ( PETERONGAN -TANGGULANGIN ) EAST JAVA PROVINCE | 1 : 200 | CROSS SECTION STA. 0 + 840.000 - STA. 0 + 900.000 (9 OF 12) | TRD-036 |
| | Sign | Sign | Sign | APPROVED BY Ir. HERRY VAZA M,Eng.Sc NIP. : 110038400 Sign | | | | SHEET NO : |
| | Date | Date | Date | Date | | FULL SIZE A3 | | 36 / 62 |

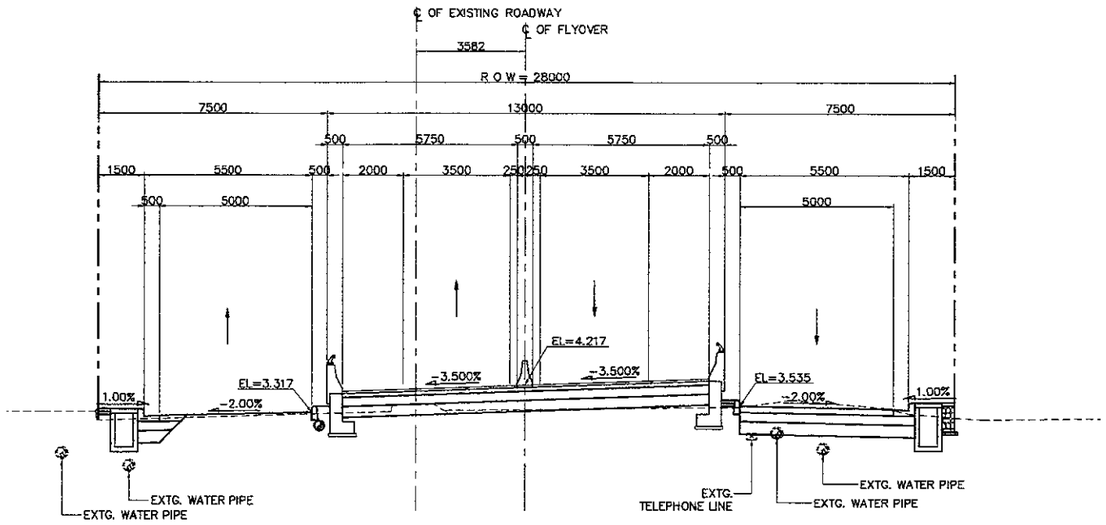


2 SECTION (STA. 0 + 860.000)
SCALE 1:200

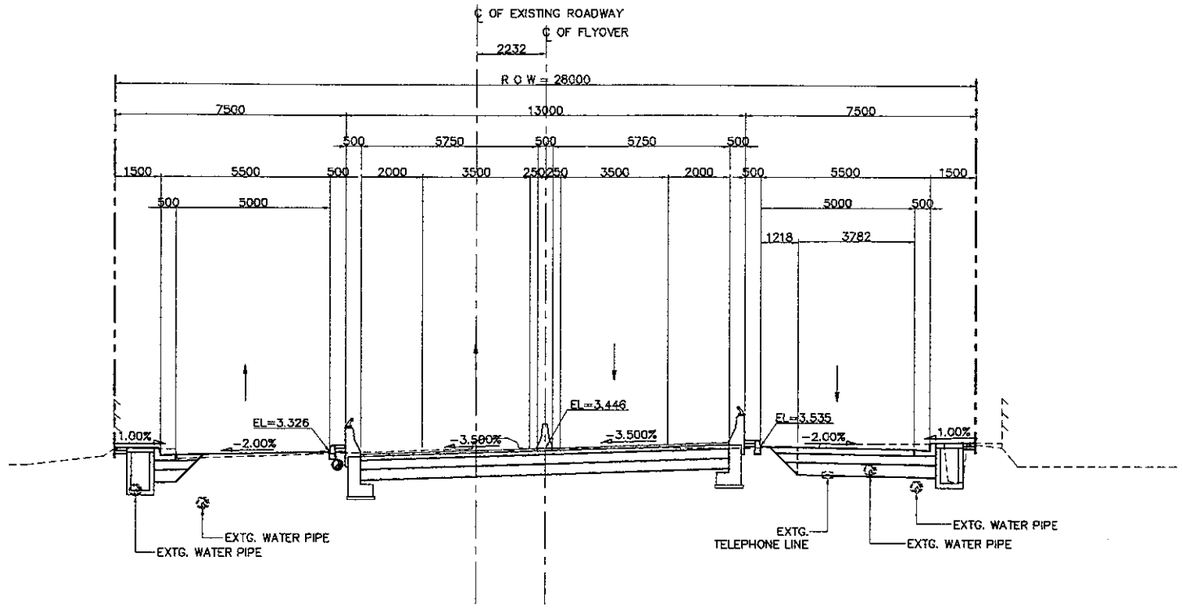


4 SECTION (STA. 0 + 900.000)
SCALE 1:200

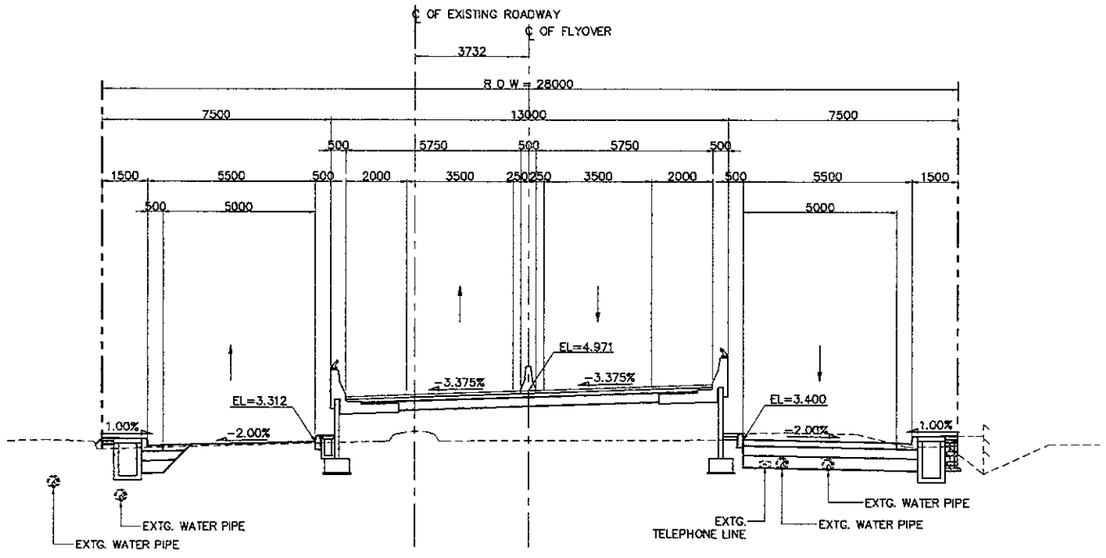


1 SECTION (STA. 0 + 840.000)
SCALE 1:200

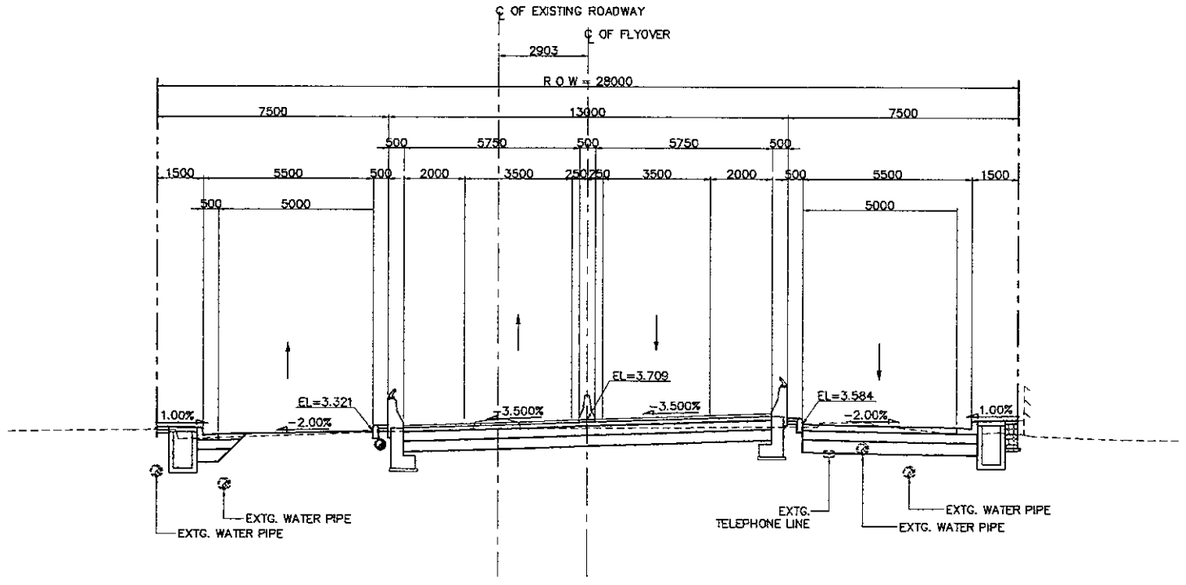


3 SECTION (STA. 0 + 880.000)
SCALE 1:200

NOTES:

1. ALL DIMENSIONS AND ELEVATIONS SHALL BE VERIFIED DURING CONSTRUCTION.
2. LOCATION OF EXISTING UTILITIES SHALL BE VERIFIED PRIOR TO CONSTRUCTION.
3. FOR LOCATION AND INVERT ELEVATIONS OF DRAINAGE SYSTEM (DITCH AND RCP) REFER TO DRAINAGE DRAWINGS.

| JICA JAPAN INTERNATIONAL COOPERATION AGENCY / KEI KATAHIRA & ENGINEERS INTERNATIONAL | DESIGNED BY | CHECKED BY | SUBMITTED BY | REPUBLIC OF INDONESIA MINISTRY OF PUBLIC WORKS DIRECTORATE GENERAL OF HIGHWAYS | PROJECT AND LOCATION : | SCALE : | DRAWING TITLE : | DRAWING NO : |
|---|---|---|---|---|---|---|---|---|
| | Name: R. UENO | Name: T. OKUMURA | Name: M. KIUCHI | | DETAILED DESIGN STUDY OF NORTH JAVA CORRIDOR FLYOVER PROJECT TANGGULANGIN FLYOVER - CONTRACT PACKAGE 3 ( PETERONGAN -TANGGULANGIN ) EAST JAVA PROVINCE | 1 : 200 | CROSS SECTION STA. 0 + 920.000 - STA. 0 + 980.000 (10 OF 12) | TRD-037 |
| | Sign | Sign | Sign | APPROVED BY: Ir. HERRY VAZA M,Eng.Sc | | | | SHEET NO : |
| | Date | Date | Date | NIP. : 110038400 | | FULL SIZE A3 | | 37 / 62 |

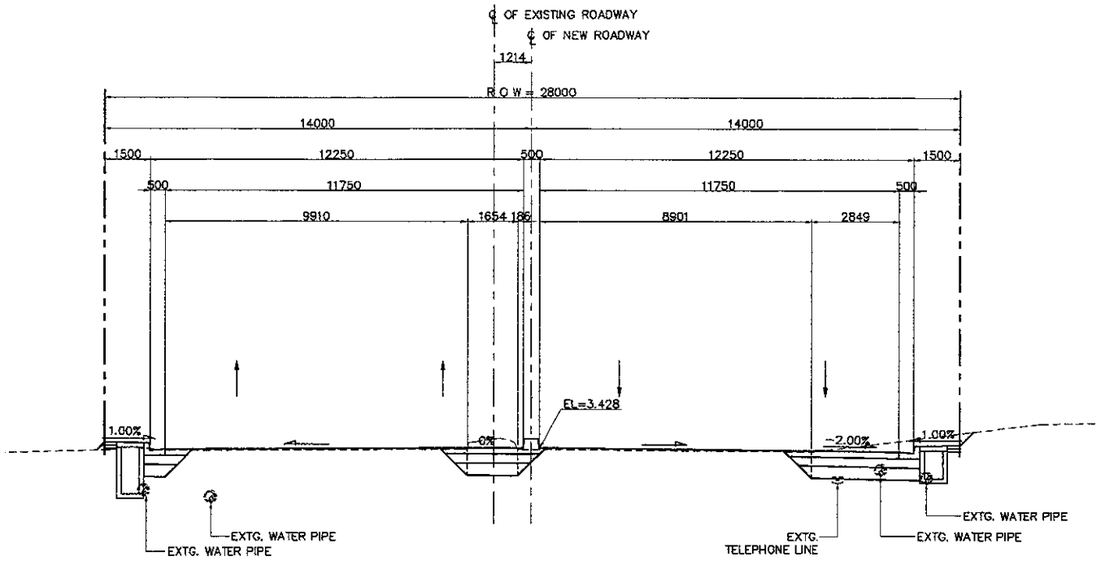


2 - SECTION (STA. 0 + 940.000)
SCALE 1:200

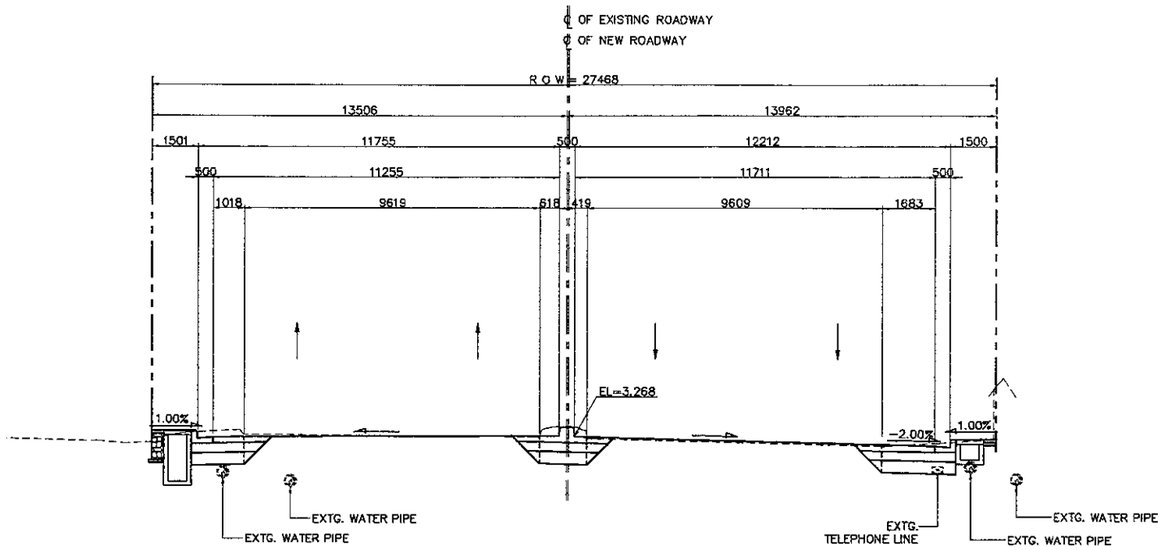


4 - SECTION (STA. 0 + 980.000)
SCALE 1:200

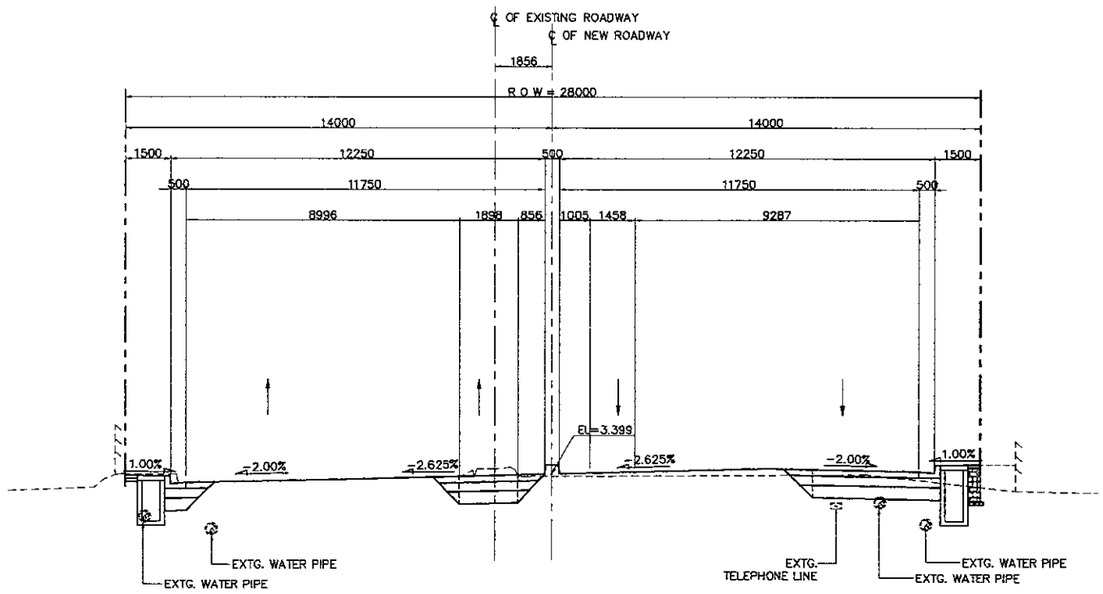


1 - SECTION (STA. 0 + 920.000)
SCALE 1:200

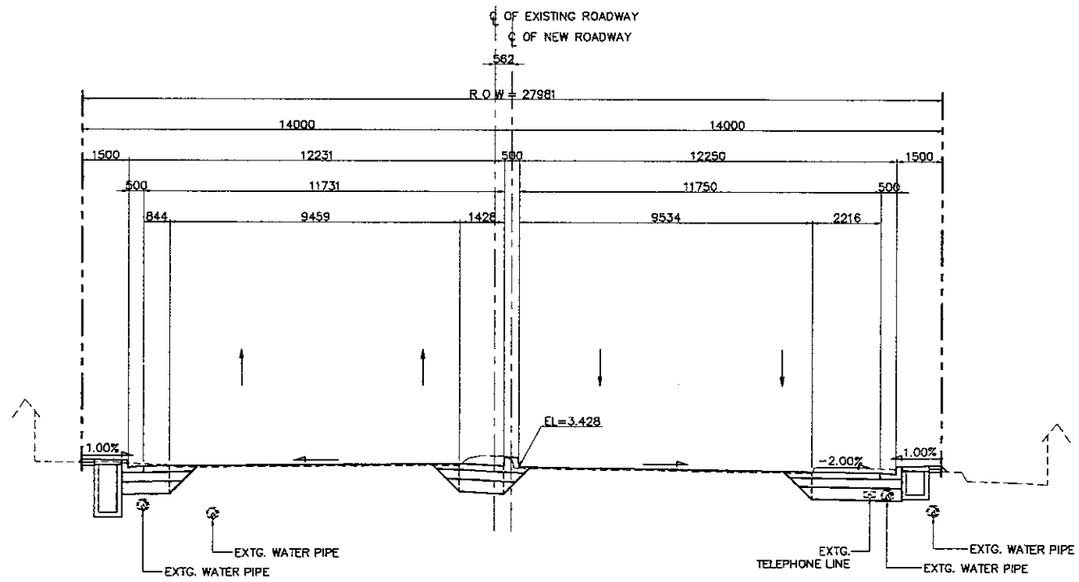


3 - SECTION (STA. 0 + 960.000)
SCALE 1:200

NOTES:

1. ALL DIMENSIONS AND ELEVATIONS SHALL BE VERIFIED DURING CONSTRUCTION.
2. LOCATION OF EXISTING UTILITIES SHALL BE VERIFIED PRIOR TO CONSTRUCTION.
3. FOR LOCATION AND INVERT ELEVATIONS OF DRAINAGE SYSTEM (DITCH AND RCP) REFER TO DRAINAGE DRAWINGS.

| JAPAN INTERNATIONAL COOPERATION AGENCY<br>KATAHIRA & ENGINEERS INTERNATIONAL | DESIGNED BY | CHECKED BY | SUBMITTED BY | REPUBLIC OF INDONESIA<br>MINISTRY OF PUBLIC WORKS<br>DIRECTORATE GENERAL OF HIGHWAYS | PROJECT AND LOCATION : | SCALE : | DRAWING TITLE : | DRAWING NO : |
|---|---|---|---|---|---|---|---|---|
| | Name: R. UENO | Name: T. OKUMURA | Name: M. KIUCHI | | DETAILED DESIGN STUDY OF<br>NORTH JAVA CORRIDOR FLYOVER PROJECT<br>TANGGULANGIN FLYOVER - CONTRACT PACKAGE 3<br>( PETERONGAN -TANGGULANGIN )<br>EAST JAVA PROVINCE | 1 : 200 | CROSS SECTION<br>STA. 1 + 000.000 - STA. 1 + 060.000<br>(11 OF 12) | TRD-038 |
| | Sign | Sign | Sign | APPROVED BY: Ir. HERRY VAZA M,Eng.Sc<br>NIP. : 110038400 | | | | SHEET NO : |
| | Date | Date | Date | Sign / Date | | FULL SIZE A3 | | 38 / 62 |

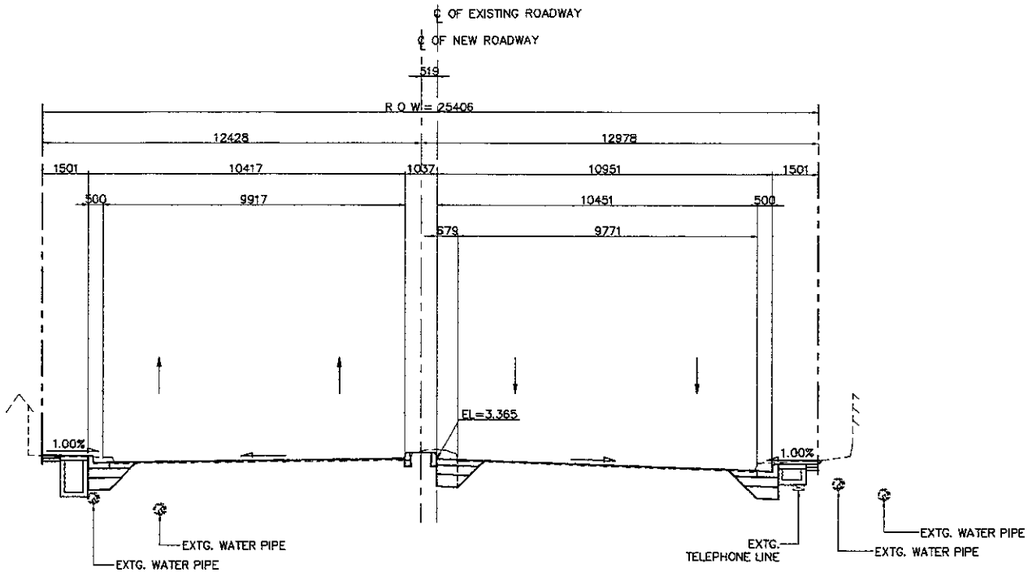


2 SECTION (STA. 1 + 020.000)
SCALE 1:200

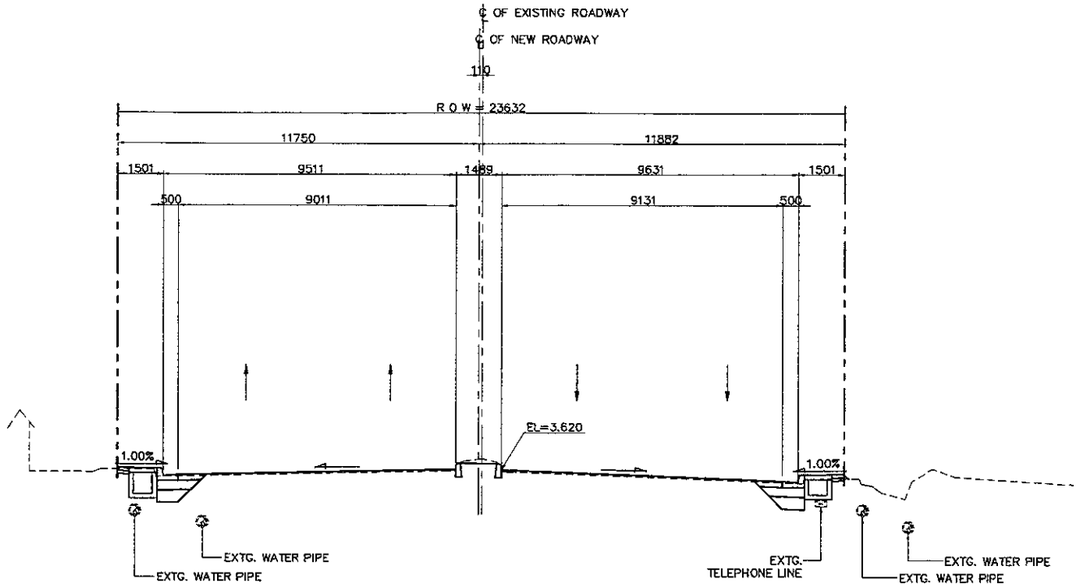


4 SECTION (STA. 1 + 060.000)
SCALE 1:200

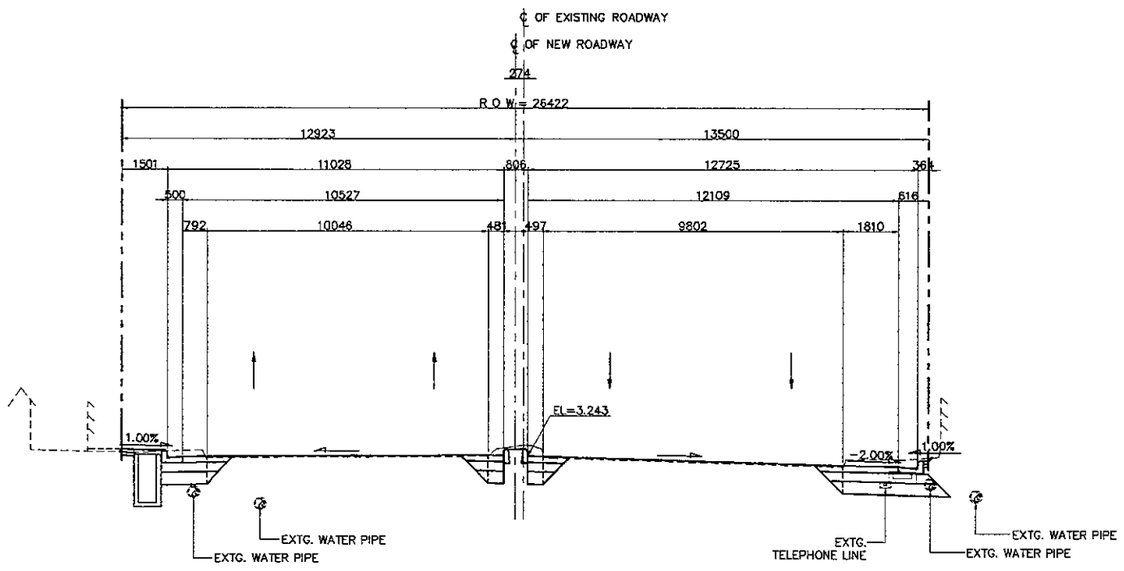


1 SECTION (STA. 1 + 000.000)
SCALE 1:200

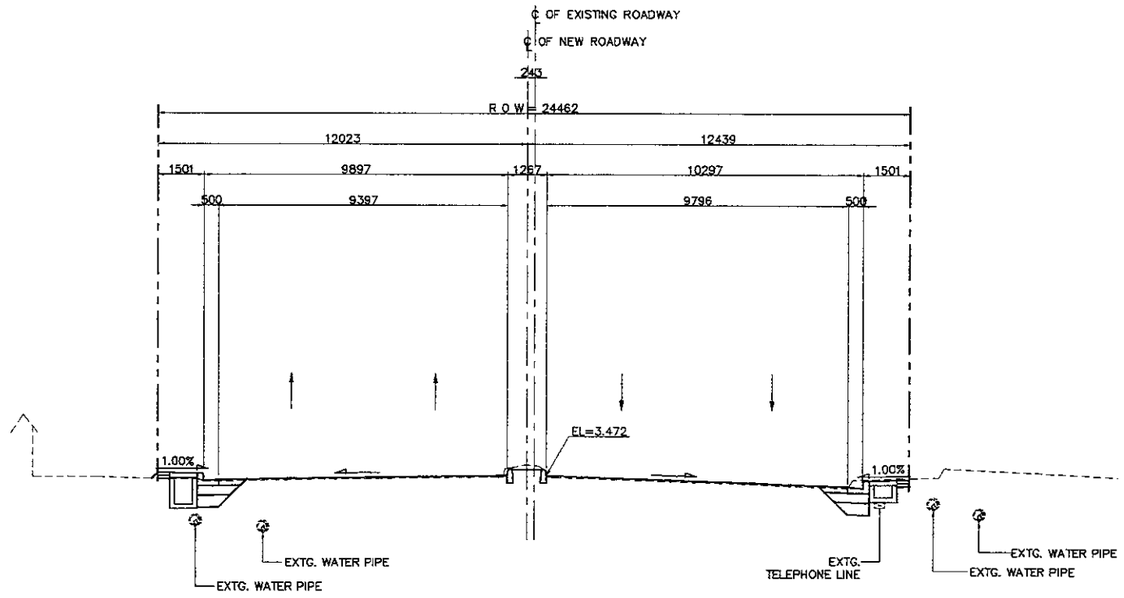


3 SECTION (STA. 1 + 040.000)
SCALE 1:200

NOTES:

1. ALL DIMENSIONS AND ELEVATIONS SHALL BE VERIFIED DURING CONSTRUCTION.
2. LOCATION OF EXISTING UTILITIES SHALL BE VERIFIED PRIOR TO CONSTRUCTION.
3. FOR LOCATION AND INVERT ELEVATIONS OF DRAINAGE SYSTEM (DITCH AND RCP) REFER TO DRAINAGE DRAWINGS.

| JAPAN INTERNATIONAL COOPERATION AGENCY<br>KATAHIRA & ENGINEERS INTERNATIONAL | DESIGNED BY | CHECKED BY | SUBMITTED BY | REPUBLIC OF INDONESIA<br>MINISTRY OF PUBLIC WORKS<br>DIRECTORATE GENERAL OF HIGHWAYS | PROJECT AND LOCATION : | SCALE : | DRAWING TITLE : | DRAWING NO : |
|---|---|---|---|---|---|---|---|---|
| | Name R. UENO | Name T. OKUMURA | Name M. KIUCHI | | DETAILED DESIGN STUDY OF<br>NORTH JAVA CORRIDOR FLYOVER PROJECT<br>TANGGULANGIN FLYOVER - CONTRACT PACKAGE 3<br>( PETERONGAN -TANGGULANGIN )<br>EAST JAVA PROVINCE | 1 : 200 | CROSS SECTION<br>STA. 1 + 080.000 - STA. 1 + 120.000<br>(12 OF 12) | TRD-039 |
| | Sign | Sign | Sign | APPROVED BY ir. HERRY VAZA M,Eng.Sc<br>NIP. : 110038400 Sign | | | | SHEET NO : |
| | Date | Date | Date | Date | | FULL SIZE A3 | | 39 / 62 |

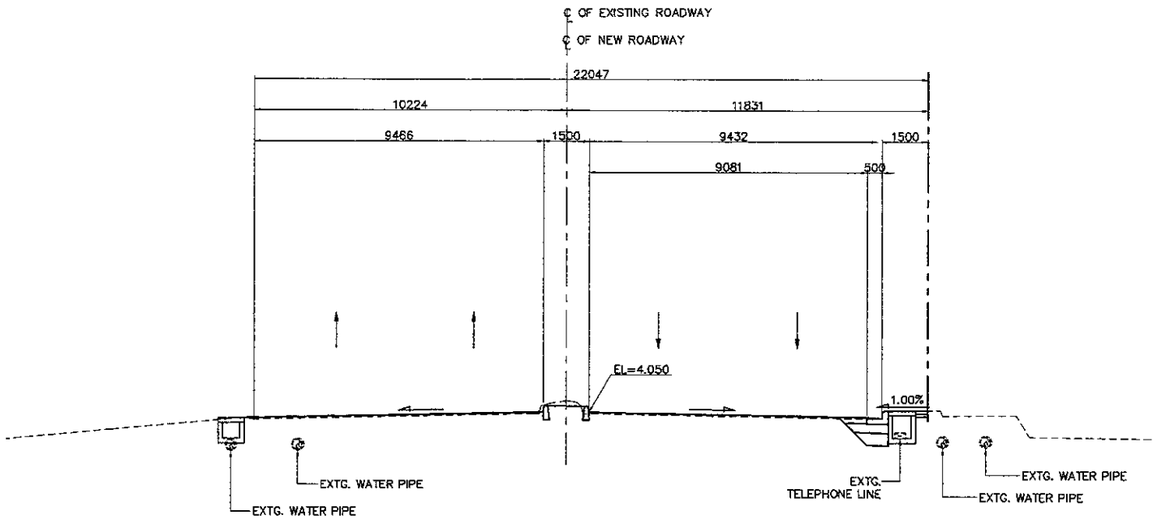


2 - SECTION (STA. 1 + 100.000)
SCALE 1:200

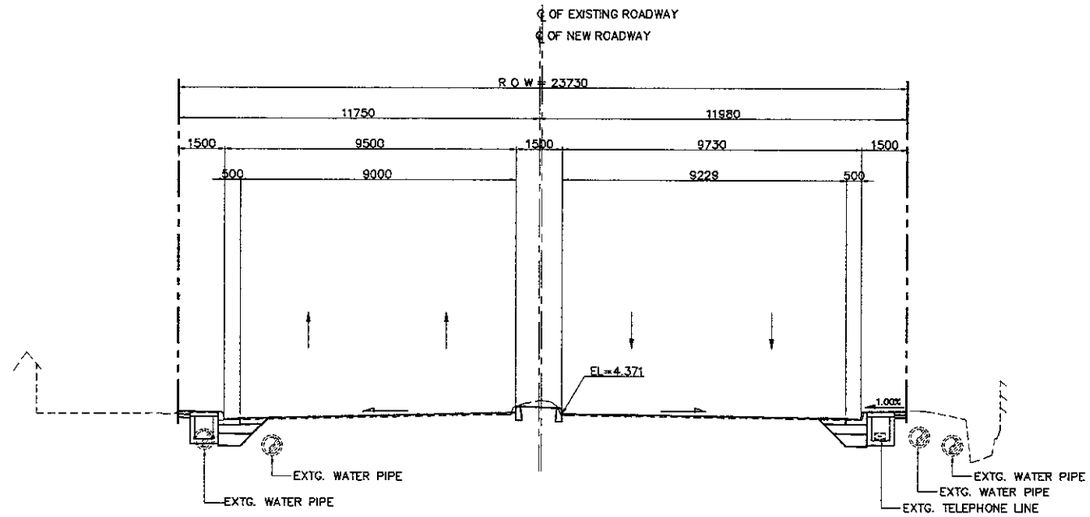


3 - SECTION (STA. 1 + 120.000)
SCALE 1:200

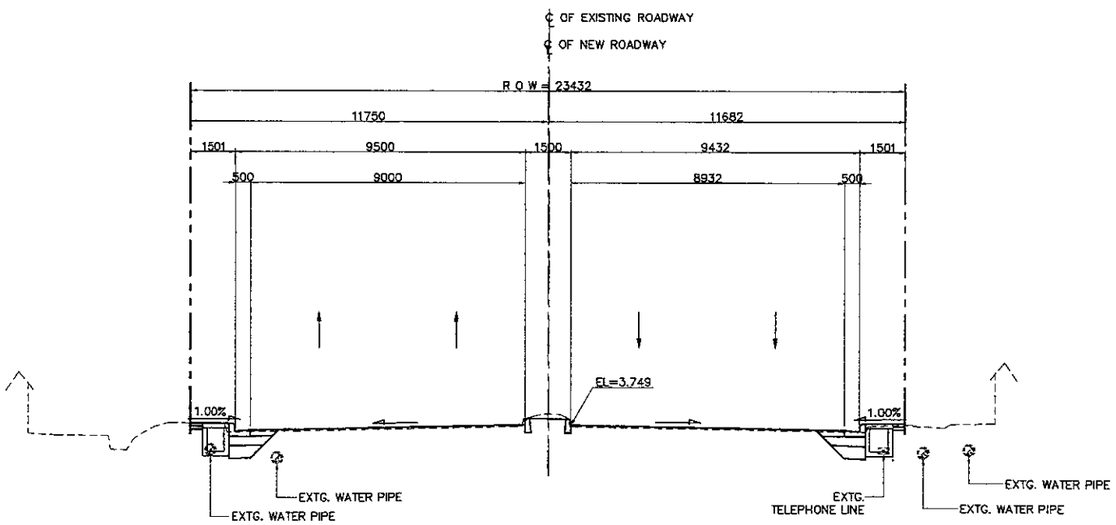


1 - SECTION (STA. 1 + 080.000)
SCALE 1:200

NOTES:

1. ALL DIMENSIONS AND ELEVATIONS SHALL BE VERIFIED DURING CONSTRUCTION.
2. LOCATION OF EXISTING UTILITIES SHALL BE VERIFIED PRIOR TO CONSTRUCTION.
3. FOR LOCATION AND INVERT ELEVATIONS OF DRAINAGE SYSTEM (DITCH AND RCP) REFER TO DRAINAGE DRAWINGS.

| JAPAN INTERNATIONAL COOPERATION AGENCY<br>KATAHIRA & ENGINEERS INTERNATIONAL | DESIGNED BY | CHECKED BY | SUBMITTED BY | REPUBLIC OF INDONESIA<br>MINISTRY OF PUBLIC WORKS<br>DIRECTORATE GENERAL OF HIGHWAYS | PROJECT AND LOCATION : | SCALE : | DRAWING TITLE : | DRAWING NO : |
|---|---|---|---|---|---|---|---|---|
| | Name R. UENO | Name T. OKUMURA | Name M. KIUCHI | | DETAILED DESIGN STUDY OF<br>NORTH JAVA CORRIDOR FLYOVER PROJECT<br>TANGGULANGIN FLYOVER - CONTRACT PACKAGE 3<br>( PETERONGAN -TANGGULANGIN )<br>EAST JAVA PROVINCE | 1 : 200 | CROSS SECTION AT ABUTMENT<br>AND PIER LOCATION<br>(1 OF 5) | TRD-040 |
| | Sign | Sign | Sign | APPROVED BY Ir. HERRY VAZA M,Eng.Sc Sign | | | | SHEET NO : |
| | Date | Date | Date | NIP. : 110038400 Date | | FULL SIZE A3 | | 40 / 62 |

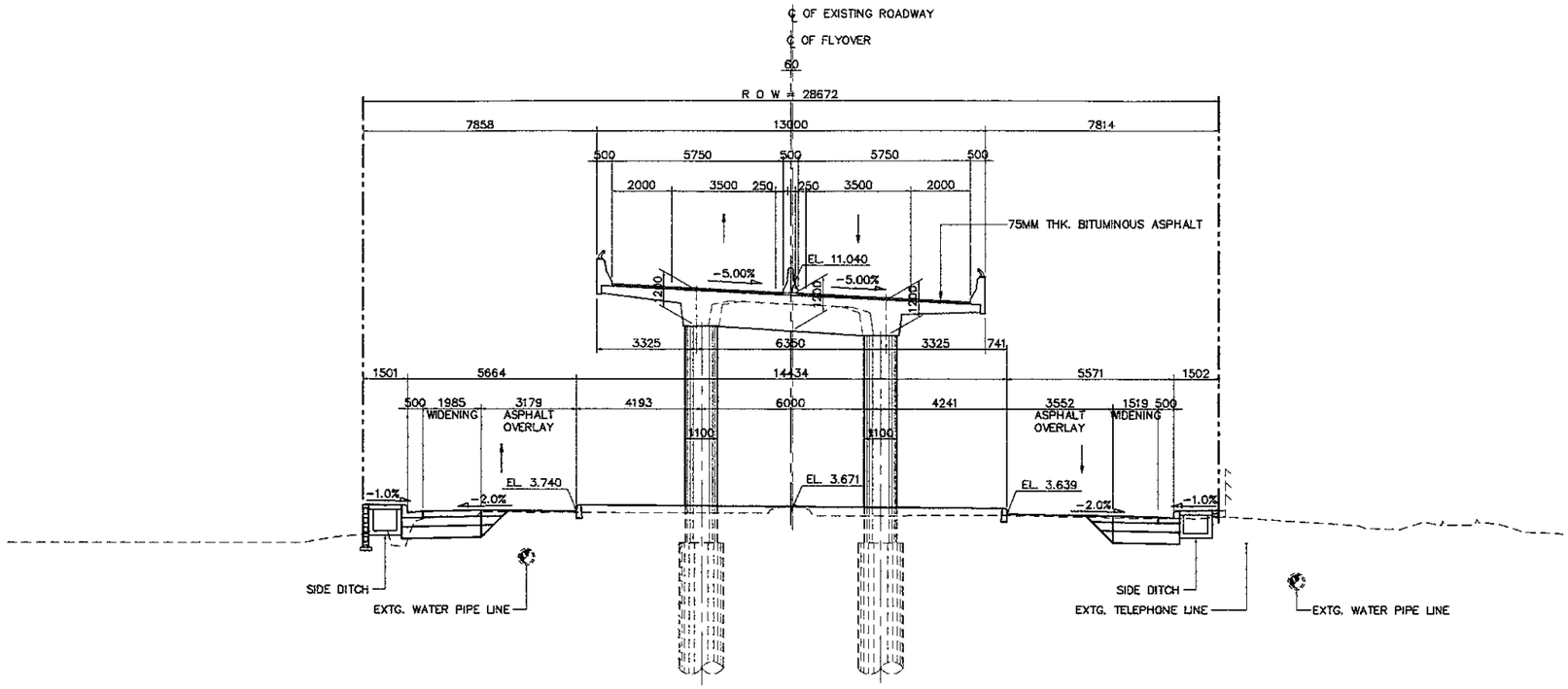


2 P1 SECTION (STA. 0 + 562.000)
SCALE 1:200

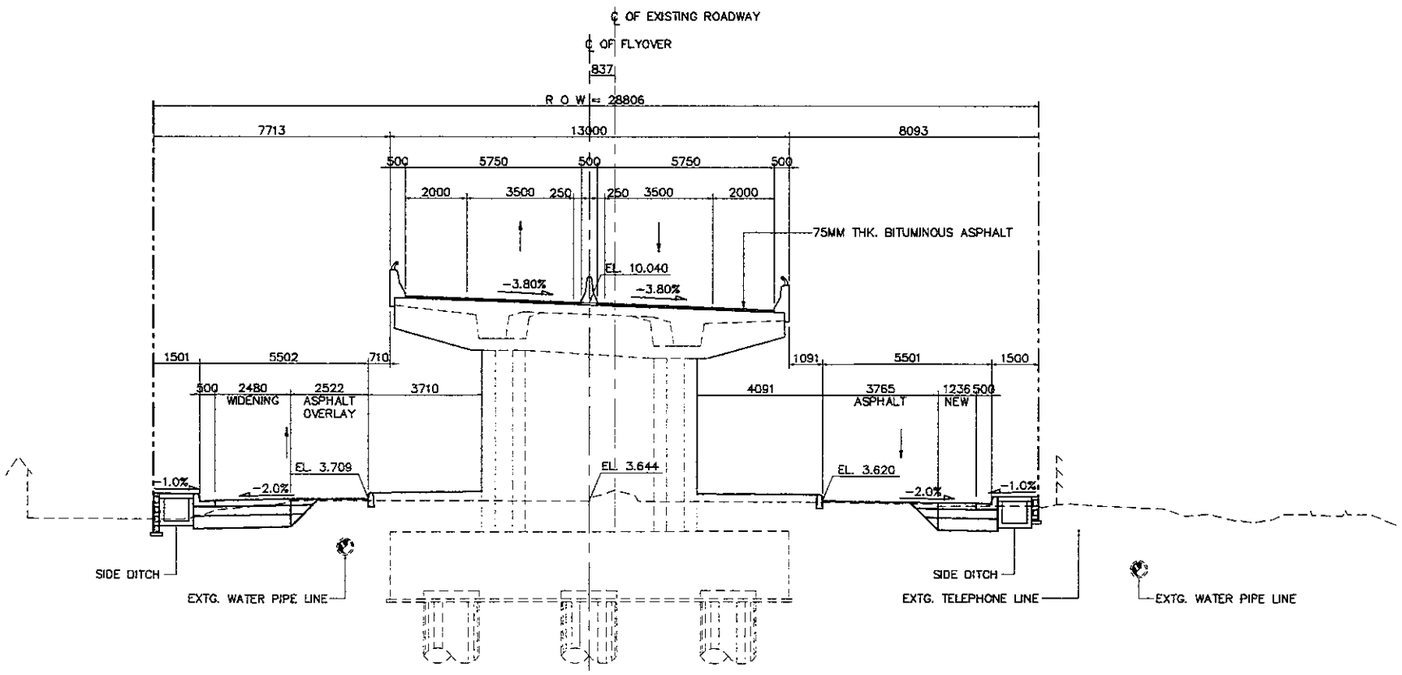


1 A1 SECTION (STA. 0 + 542.000)
SCALE 1:200

NOTES:

1. ALL DIMENSIONS AND ELEVATIONS SHALL BE VERIFIED DURING CONSTRUCTION.
2. LOCATION OF EXISTING UTILITIES SHALL BE VERIFIED PRIOR TO CONSTRUCTION.
3. FOR LOCATION AND INVERT ELEVATIONS OF DRAINAGE SYSTEM (DITCH AND RCP) REFER TO DRAINAGE DRAWINGS.

| JAPAN INTERNATIONAL COOPERATION AGENCY / KATAHIRA & ENGINEERS INTERNATIONAL | DESIGNED BY | CHECKED BY | SUBMITTED BY | REPUBLIC OF INDONESIA MINISTRY OF PUBLIC WORKS DIRECTORATE GENERAL OF HIGHWAYS | PROJECT AND LOCATION : | SCALE : | DRAWING TITLE : | DRAWING NO : |
|---|---|---|---|---|---|---|---|---|
| | Name: R. UENO | Name: T. OKUMURA | Name: M. KIUCHI | | DETAILED DESIGN STUDY OF NORTH JAVA CORRIDOR FLYOVER PROJECT TANGGULANGIN FLYOVER - CONTRACT PACKAGE 3 ( PETERONGAN -TANGGULANGIN ) EAST JAVA PROVINCE | 1 : 200 | CROSS SECTION AT ABUTMENT AND PIER LOCATION (2 OF 5) | TRD-041 |
| | Sign | Sign | Sign | APPROVED BY: Ir. HERRY VAZA M,Eng.Sc NIP. : 110038400 | | | | SHEET NO : 41 / 62 |
| | Date | Date | Date | Sign / Date | | FULL SIZE A3 | | |

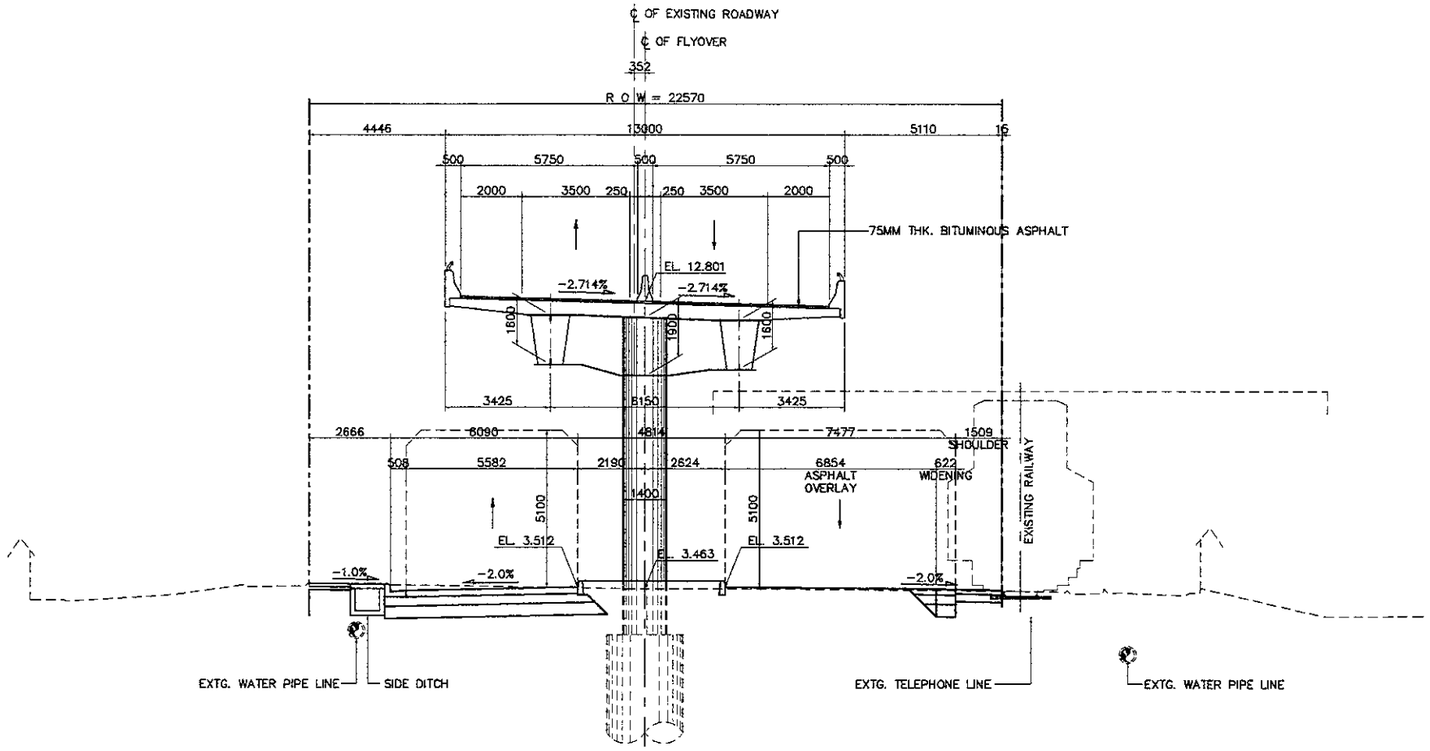


2 - P3 SECTION (STA. 0 + 607.000)
SCALE 1:200

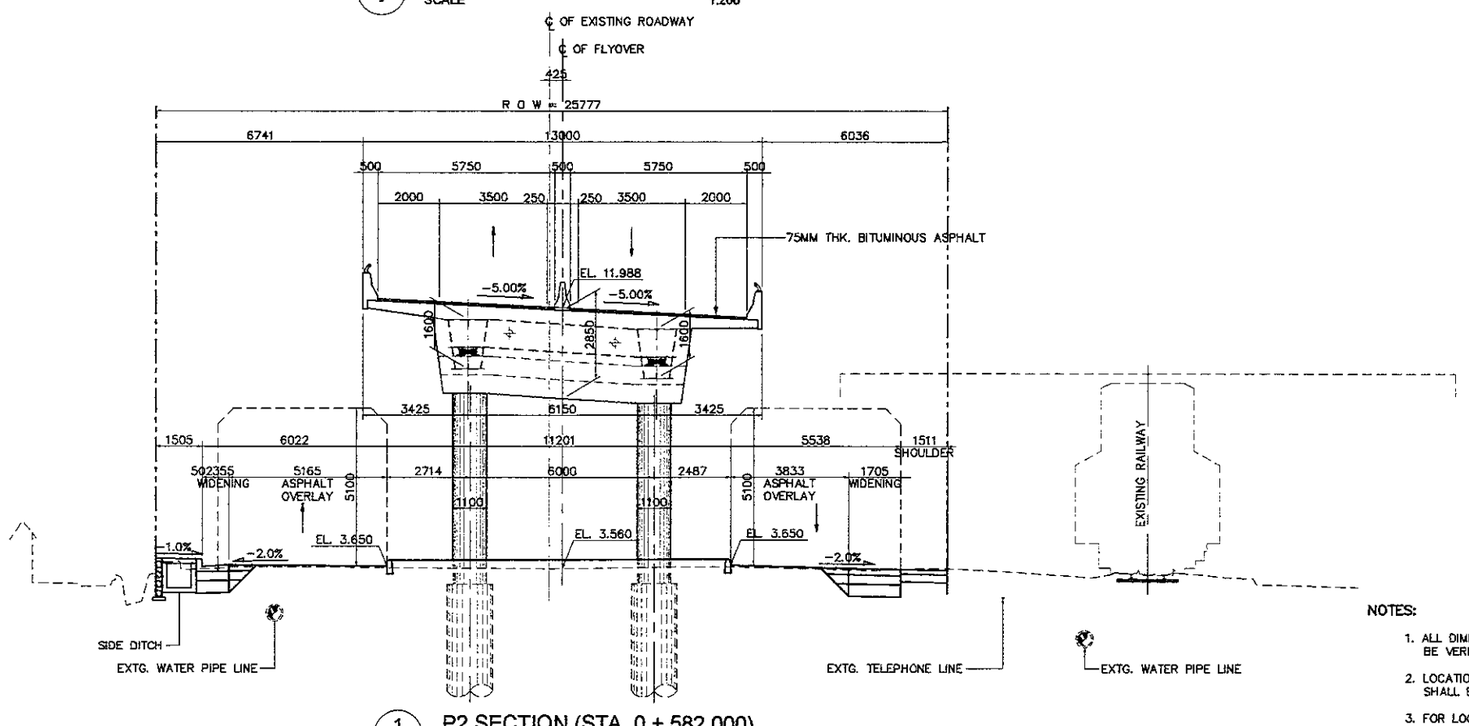


1 - P2 SECTION (STA. 0 + 582.000)
SCALE 1:200

NOTES:

1. ALL DIMENSIONS AND ELEVATIONS SHALL BE VERIFIED DURING CONSTRUCTION.
2. LOCATION OF EXISTING UTILITIES SHALL BE VERIFIED PRIOR TO CONSTRUCTION.
3. FOR LOCATION AND INVERT ELEVATIONS OF DRAINAGE SYSTEM (DITCH AND RCP) REFER TO DRAINAGE DRAWINGS.

| JICA JAPAN INTERNATIONAL COOPERATION AGENCY / KATAHIRA & ENGINEERS INTERNATIONAL | DESIGNED BY | CHECKED BY | SUBMITTED BY | REPUBLIC OF INDONESIA MINISTRY OF PUBLIC WORKS DIRECTORATE GENERAL OF HIGHWAYS | PROJECT AND LOCATION : | SCALE : | DRAWING TITLE : | DRAWING NO : |
|---|---|---|---|---|---|---|---|---|
| | Name: R. UENO | Name: T. OKUMURA | Name: M. KIUCHI | | DETAILED DESIGN STUDY OF NORTH JAVA CORRIDOR FLYOVER PROJECT TANGGULANGIN FLYOVER - CONTRACT PACKAGE 3 ( PETERONGAN -TANGGULANGIN ) EAST JAVA PROVINCE | 1 : 200 | CROSS SECTION AT ABUTMENT AND PIER LOCATION (3 OF 5) | TRD-042 |
| | Sign | Sign | Sign | APPROVED BY: Ir. HERRY VAZA M,Eng.Sc | | | | SHEET NO : |
| | Date | Date | Date | NIP. : 110038400 / Sign / Date | | FULL SIZE A3 | | 42 / 62 |

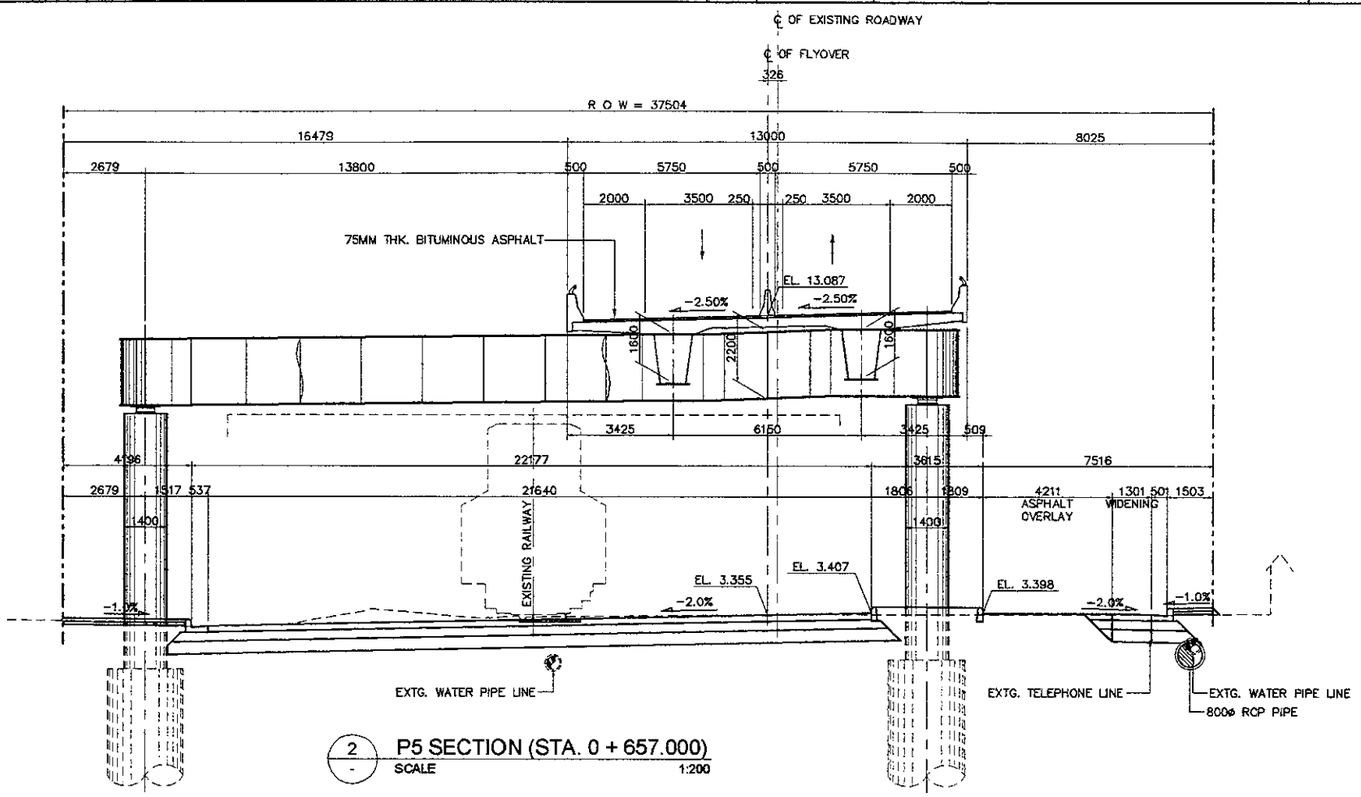


2 - P5 SECTION (STA. 0 + 657.000)
SCALE 1:200

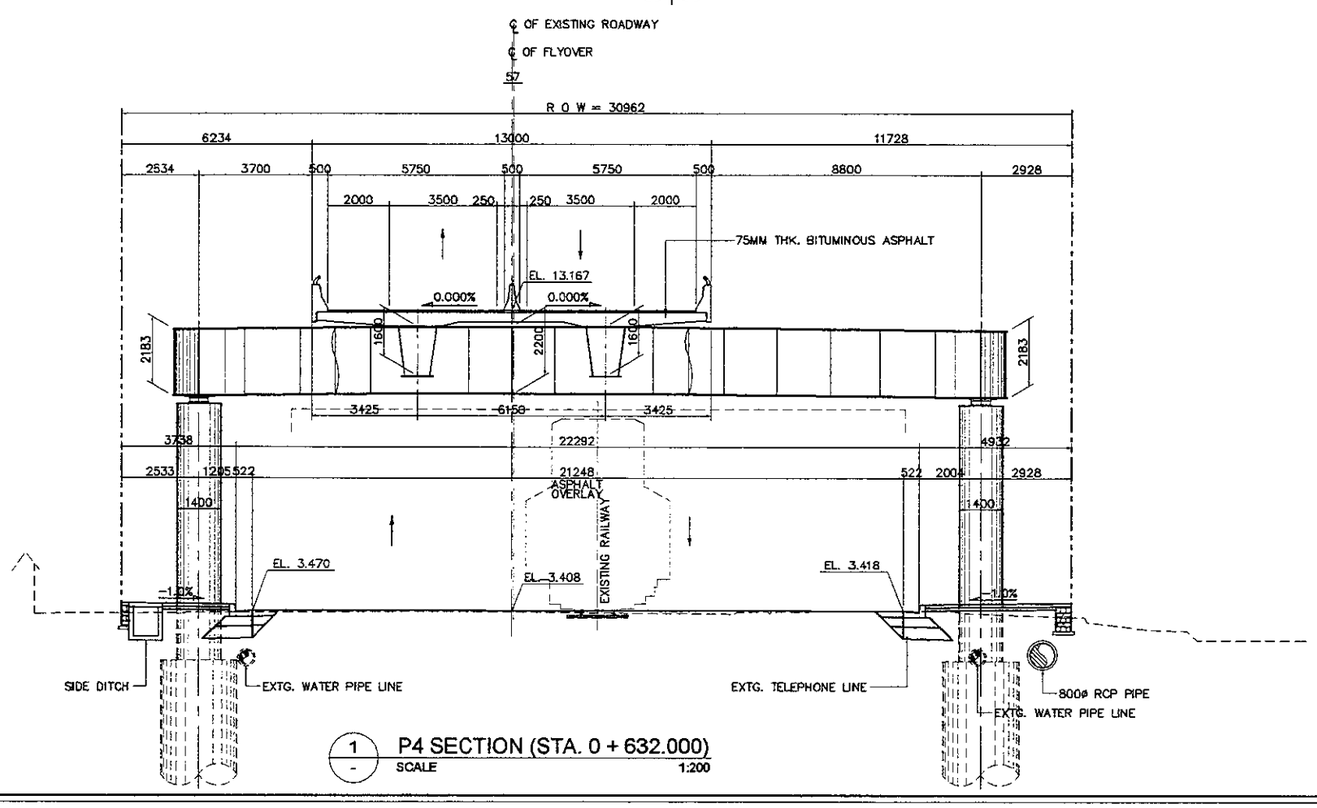


1 - P4 SECTION (STA. 0 + 632.000)
SCALE 1:200

NOTES:

1. ALL DIMENSIONS AND ELEVATIONS SHALL BE VERIFIED DURING CONSTRUCTION.
2. LOCATION OF EXISTING UTILITIES SHALL BE VERIFIED PRIOR TO CONSTRUCTION.
3. FOR LOCATION AND INVERT ELEVATIONS OF DRAINAGE SYSTEM (DITCH AND RCP) REFER TO DRAINAGE DRAWINGS.

| JICA JAPAN INTERNATIONAL COOPERATION AGENCY / KEI KATAHIRA & ENGINEERS INTERNATIONAL | DESIGNED BY | CHECKED BY | SUBMITTED BY | REPUBLIC OF INDONESIA MINISTRY OF PUBLIC WORKS DIRECTORATE GENERAL OF HIGHWAYS | PROJECT AND LOCATION : | SCALE : | DRAWING TITLE : | DRAWING NO : |
|---|---|---|---|---|---|---|---|---|
| | Name: R. UENO | Name: T. OKUMURA | Name: M. KIUCHI | | DETAILED DESIGN STUDY OF NORTH JAVA CORRIDOR FLYOVER PROJECT TANGGULANGIN FLYOVER - CONTRACT PACKAGE 3 ( PETERONGAN -TANGGULANGIN ) EAST JAVA PROVINCE | 1 : 200 | CROSS SECTION AT ABUTMENT AND PIER LOCATION (4 OF 5) | TRD-043 |
| | Sign | Sign | Sign | APPROVED BY: Ir. HERRY VAZA M,Eng.Sc NIP. : 110038400 — Sign | | | | SHEET NO : 43 / 62 |
| | Date | Date | Date | Date | | FULL SIZE A3 | | |

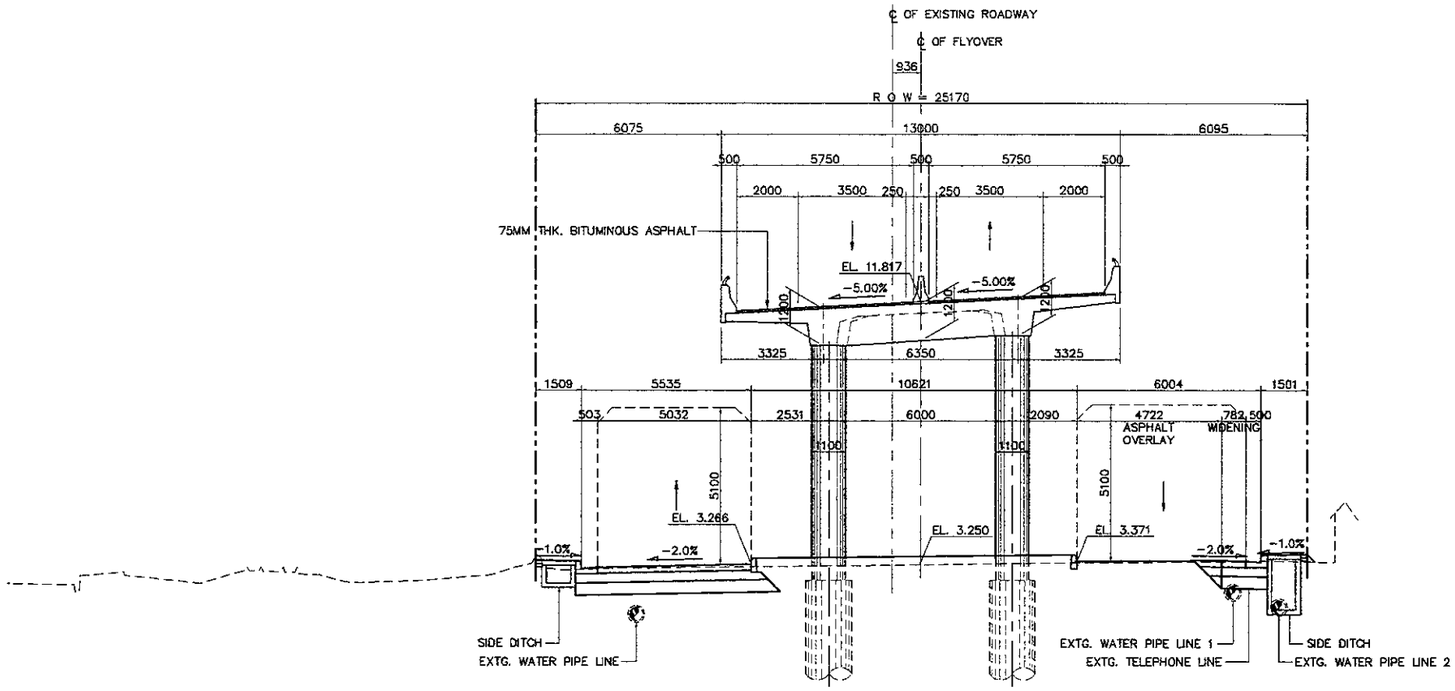


2 - P7 SECTION (STA. 0 + 702.000)
SCALE 1:200

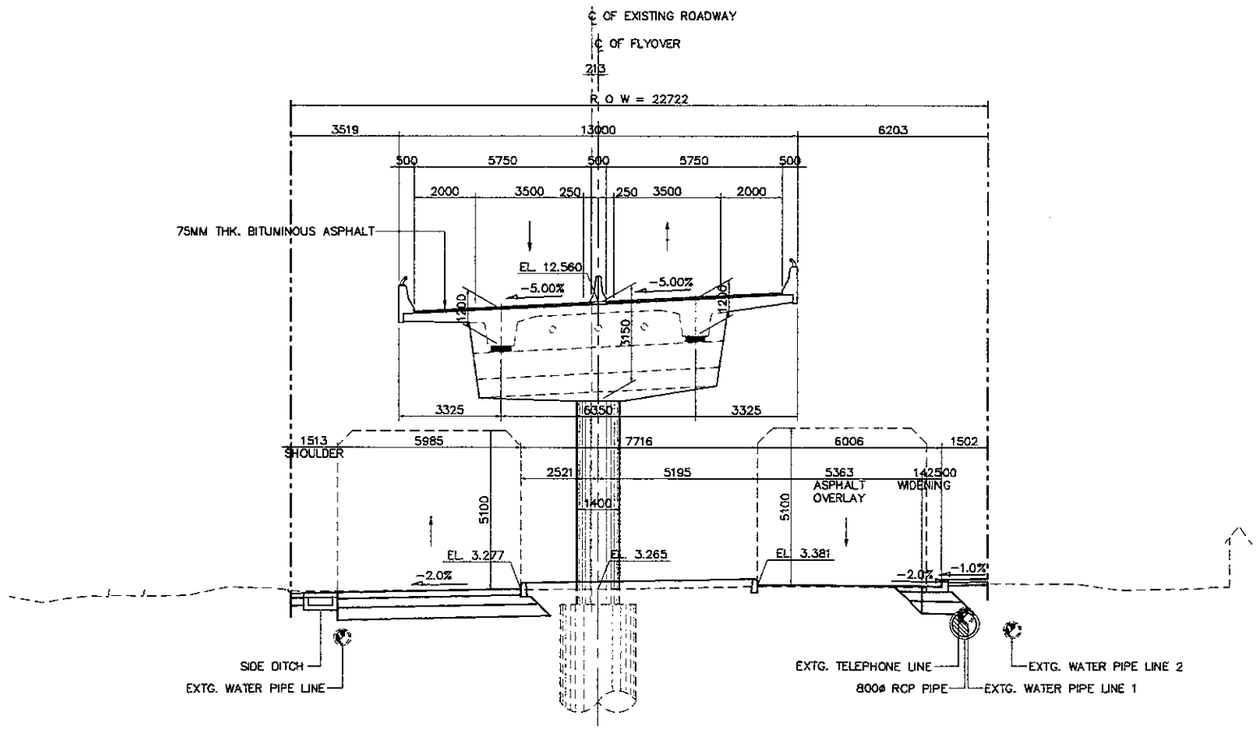


1 - P6 SECTION (STA. 0 + 682.000)
SCALE 1:200

NOTES:

1. ALL DIMENSIONS AND ELEVATIONS SHALL BE VERIFIED DURING CONSTRUCTION.
2. LOCATION OF EXISTING UTILITIES SHALL BE VERIFIED PRIOR TO CONSTRUCTION.
3. FOR LOCATION AND INVERT ELEVATIONS OF DRAINAGE SYSTEM (DITCH AND RCP) REFER TO DRAINAGE DRAWINGS.

| JAPAN INTERNATIONAL COOPERATION AGENCY<br>KATAHIRA & ENGINEERS INTERNATIONAL | DESIGNED BY | CHECKED BY | SUBMITTED BY | REPUBLIC OF INDONESIA<br>MINISTRY OF PUBLIC WORKS<br>DIRECTORATE GENERAL OF HIGHWAYS | PROJECT AND LOCATION : | SCALE : | DRAWING TITLE : | DRAWING NO : |
|---|---|---|---|---|---|---|---|---|
| | Name R. UENO | Name T. OKUMURA | Name M. KIUCHI | | DETAILED DESIGN STUDY OF<br>NORTH JAVA CORRIDOR FLYOVER PROJECT<br>TANGGULANGIN FLYOVER - CONTRACT PACKAGE 3<br>( PETERONGAN -TANGGULANGIN )<br>EAST JAVA PROVINCE | 1 : 200 | CROSS SECTION AT ABUTMENT<br>AND PIER LOCATION<br>(5 OF 5) | TRD-044 |
| | Sign | Sign | Sign | APPROVED BY Ir. HERRY VAZA M,Eng.Sc Sign | | | | SHEET NO : |
| | Date | Date | Date | NIP. : 110038400 Date | | FULL SIZE A3 | | 44 / 62 |

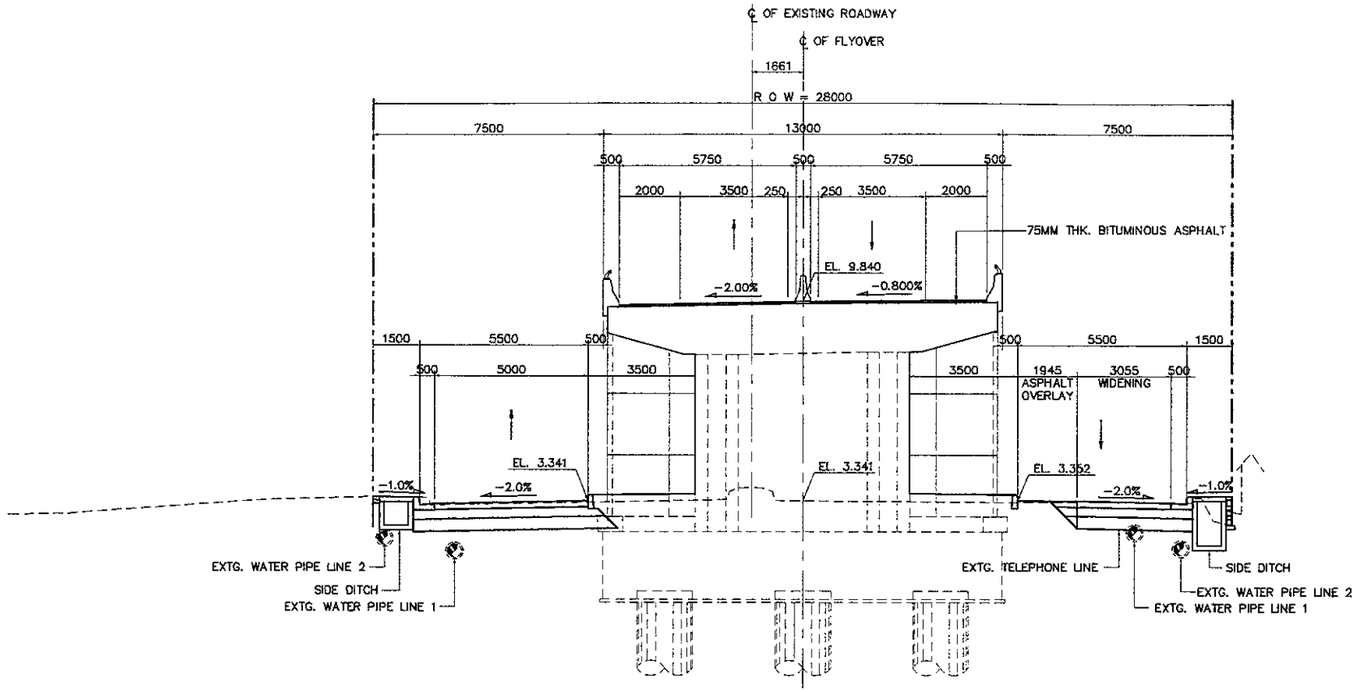


2 - A2 SECTION (STA. 0 + 742.000)
SCALE 1:200

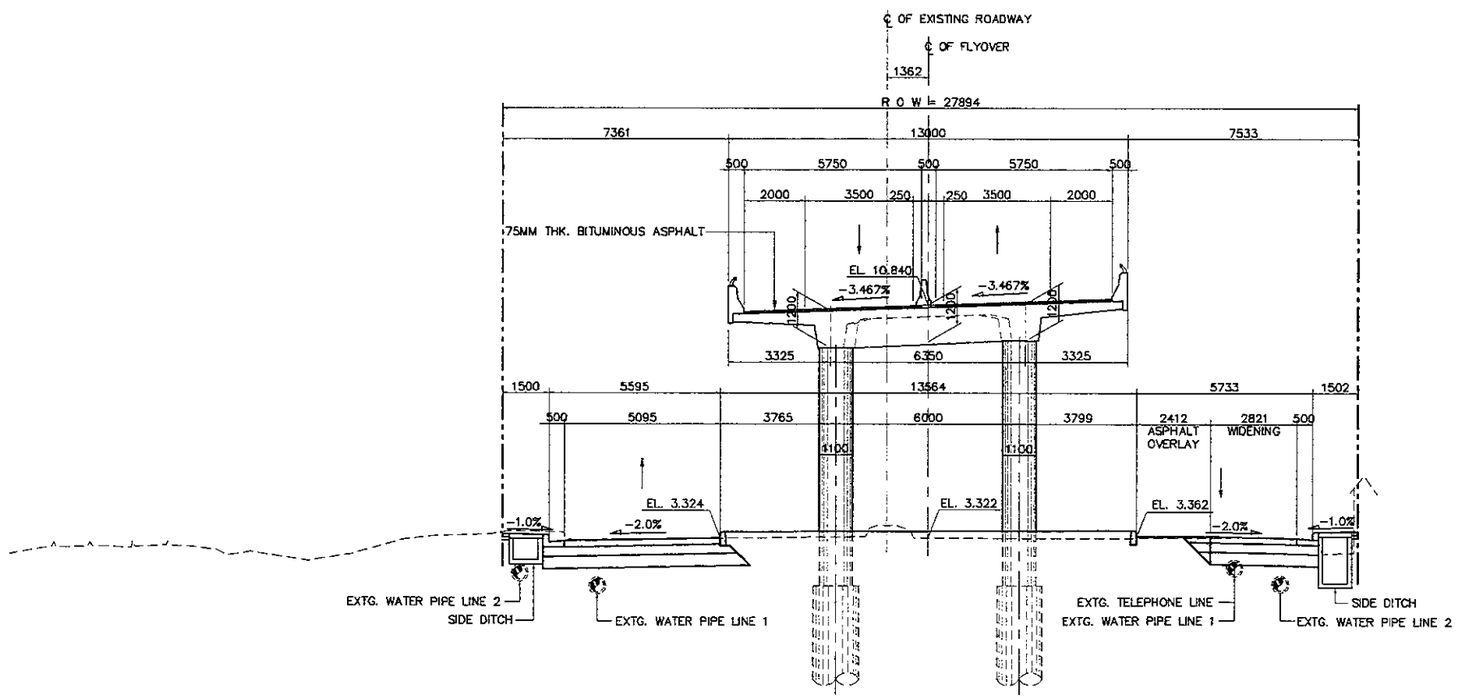


1 - P8 SECTION (STA. 0 + 722.000)
SCALE 1:200

NOTES:

1. ALL DIMENSIONS AND ELEVATIONS SHALL BE VERIFIED DURING CONSTRUCTION.
2. LOCATION OF EXISTING UTILITIES SHALL BE VERIFIED PRIOR TO CONSTRUCTION.
3. FOR LOCATION AND INVERT ELEVATIONS OF DRAINAGE SYSTEM (DITCH AND RCP) REFER TO DRAINAGE DRAWINGS.

| JAPAN INTERNATIONAL COOPERATION AGENCY<br>KATAHIRA & ENGINEERS INTERNATIONAL | DESIGNED BY | | CHECKED BY | | SUBMITTED BY | | REPUBLIC OF INDONESIA<br>MINISTRY OF PUBLIC WORKS<br>DIRECTORATE GENERAL OF HIGHWAYS | PROJECT AND LOCATION : | SCALE : | DRAWING TITLE : | DRAWING NO : |
|---|---|---|---|---|---|---|---|---|---|---|---|
| | Name | R. UENO | Name | T. OKUMURA | Name | M. KIUCHI | | DETAILED DESIGN STUDY OF<br>NORTH JAVA CORRIDOR FLYOVER PROJECT<br>TANGGULANGIN FLYOVER - CONTRACT PACKAGE 3<br>( PETERONGAN -TANGGULANGIN )<br>EAST JAVA PROVINCE | 1 : 1000 | RIGHT-OF-WAY PLAN<br>1 OF 4 | TRD-045 |
| | Sign | | Sign | | Sign | | APPROVED BY: Ir. HERRY VAZA M,Eng.Sc<br>NIP. : 110038400 | | | | SHEET NO : |
| | Date | | Date | | Date | | Sign / Date | | FULL SIZE A3 | | 45 / 62 |

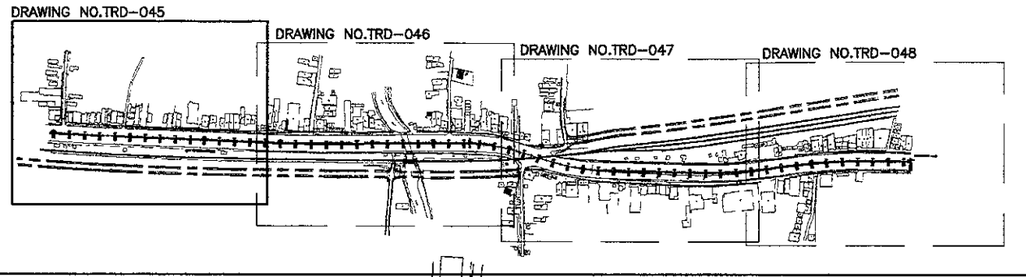


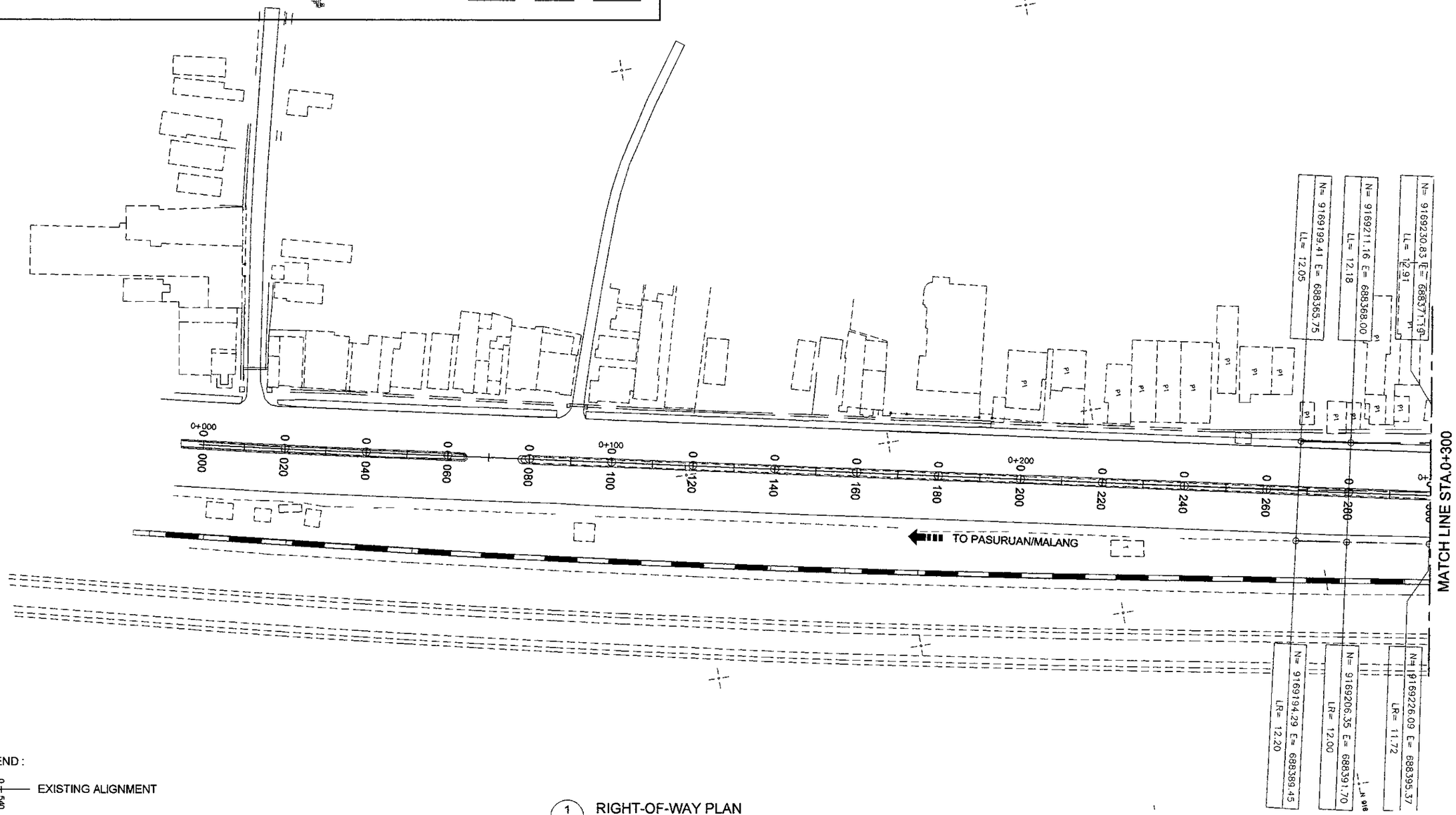


LEGEND :

0+540 — EXISTING ALIGNMENT

0+500 — DESIGN ALIGNGMENT

1 / - RIGHT-OF-WAY PLAN
SCALE 1:1000

| JICA JAPAN INTERNATIONAL COOPERATION AGENCY / KEI KATAHIRA & ENGINEERS INTERNATIONAL | DESIGNED BY | CHECKED BY | SUBMITTED BY | REPUBLIC OF INDONESIA MINISTRY OF PUBLIC WORKS DIRECTORATE GENERAL OF HIGHWAYS | PROJECT AND LOCATION : | SCALE : | DRAWING TITLE : | DRAWING NO : |
|---|---|---|---|---|---|---|---|---|
| | Name: R. UENO | Name: T. OKUMURA | Name: M. KIUCHI | | DETAILED DESIGN STUDY OF NORTH JAVA CORRIDOR FLYOVER PROJECT TANGGULANGIN FLYOVER - CONTRACT PACKAGE 3 ( PETERONGAN -TANGGULANGIN ) EAST JAVA PROVINCE | 1 : 1000 | RIGHT-OF-WAY PLAN 2 OF 4 | TRD-046 |
| | Sign | Sign | Sign | APPROVED BY: Ir. HERRY VAZA M,Eng.Sc NIP. : 110038400 / Sign | | FULL SIZE A3 | | SHEET NO : 46 / 62 |
| | Date | Date | Date | Date | | | | |

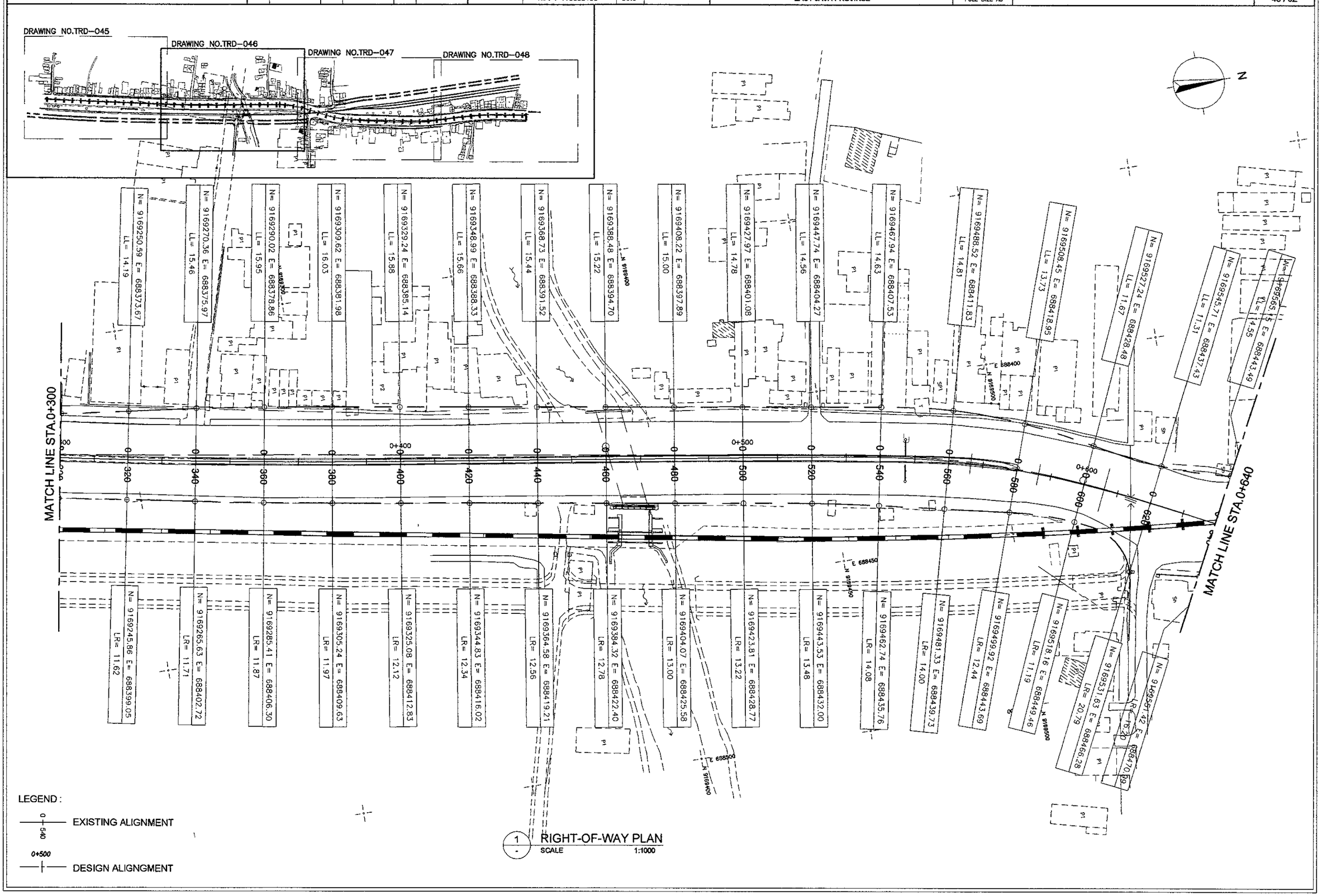

| JICA JAPAN INTERNATIONAL COOPERATION AGENCY / KATAHIRA & ENGINEERS INTERNATIONAL | DESIGNED BY | CHECKED BY | SUBMITTED BY | REPUBLIC OF INDONESIA MINISTRY OF PUBLIC WORKS DIRECTORATE GENERAL OF HIGHWAYS | PROJECT AND LOCATION : | SCALE : | DRAWING TITLE : | DRAWING NO : |
|---|---|---|---|---|---|---|---|---|
| | Name: R. UENO | Name: T. OKUMURA | Name: M. KIUCHI | | DETAILED DESIGN STUDY OF NORTH JAVA CORRIDOR FLYOVER PROJECT TANGGULANGIN FLYOVER - CONTRACT PACKAGE 3 ( PETERONGAN -TANGGULANGIN ) EAST JAVA PROVINCE | 1 : 1000 | RIGHT-OF-WAY PLAN 3 OF 4 | TRD-047 |
| | Sign | Sign | Sign | APPROVED BY: Ir. HERRY VAZA M,Eng.Sc NIP. : 110038400 | | FULL SIZE A3 | | SHEET NO : 47 / 62 |
| | Date | Date | Date | Sign / Date | | | | |

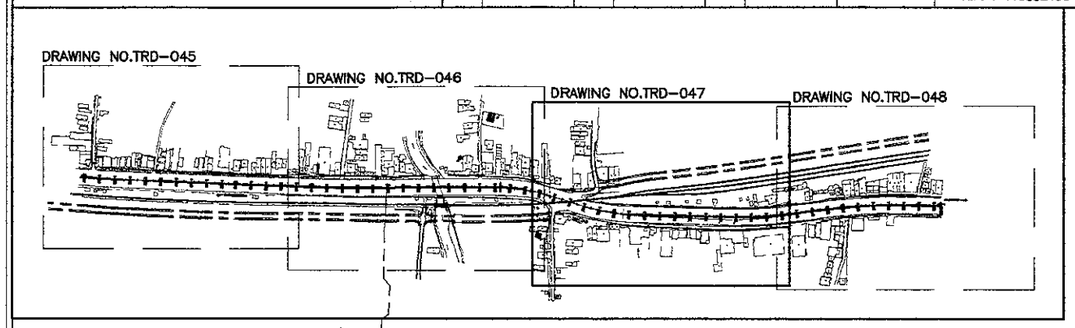


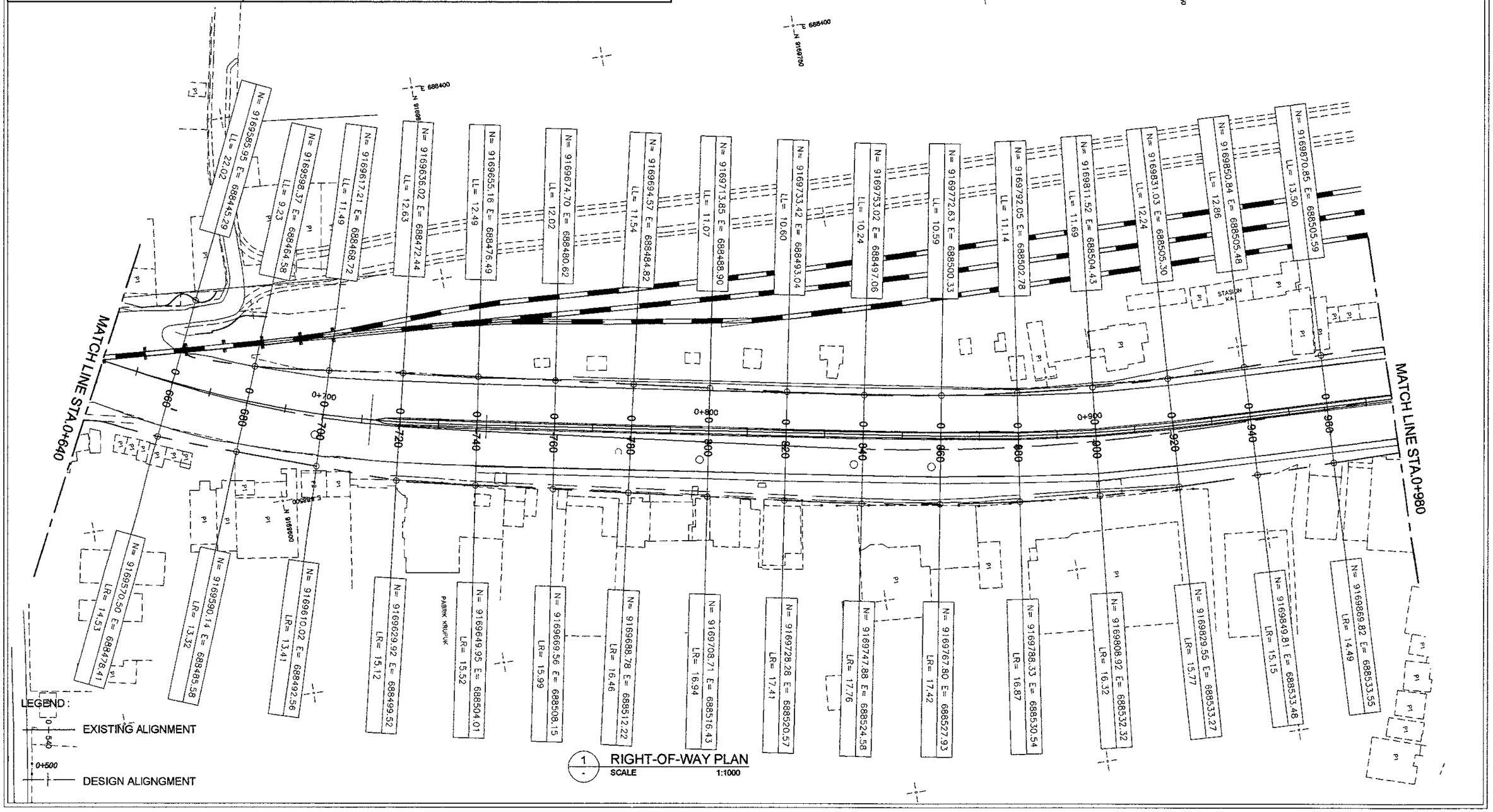

| JAPAN INTERNATIONAL COOPERATION AGENCY<br>KATAHIRA & ENGINEERS INTERNATIONAL | DESIGNED BY | CHECKED BY | SUBMITTED BY | REPUBLIC OF INDONESIA<br>MINISTRY OF PUBLIC WORKS<br>DIRECTORATE GENERAL OF HIGHWAYS | PROJECT AND LOCATION : | SCALE : | DRAWING TITLE : | DRAWING NO : |
|---|---|---|---|---|---|---|---|---|
| | Name R. UENO | Name T. OKUMURA | Name M. KIUCHI | | DETAILED DESIGN STUDY OF<br>NORTH JAVA CORRIDOR FLYOVER PROJECT<br>TANGGULANGIN FLYOVER - CONTRACT PACKAGE 3<br>( PETERONGAN -TANGGULANGIN )<br>EAST JAVA PROVINCE | 1 : 1000 | RIGHT-OF-WAY PLAN<br>4 OF 4 | TRD-048 |
| | Sign | Sign | Sign | APPROVED BY Ir. HERRY VAZA M,Eng.Sc<br>NIP. : 110038400 Sign | | | | SHEET NO : |
| | Date | Date | Date | Date | | FULL SIZE A3 | | 48 / 62 |

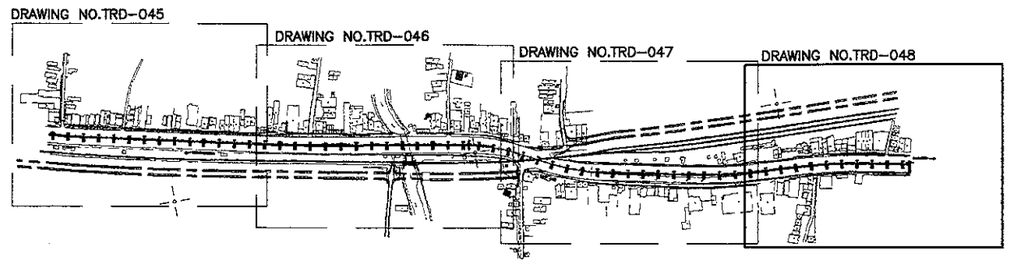


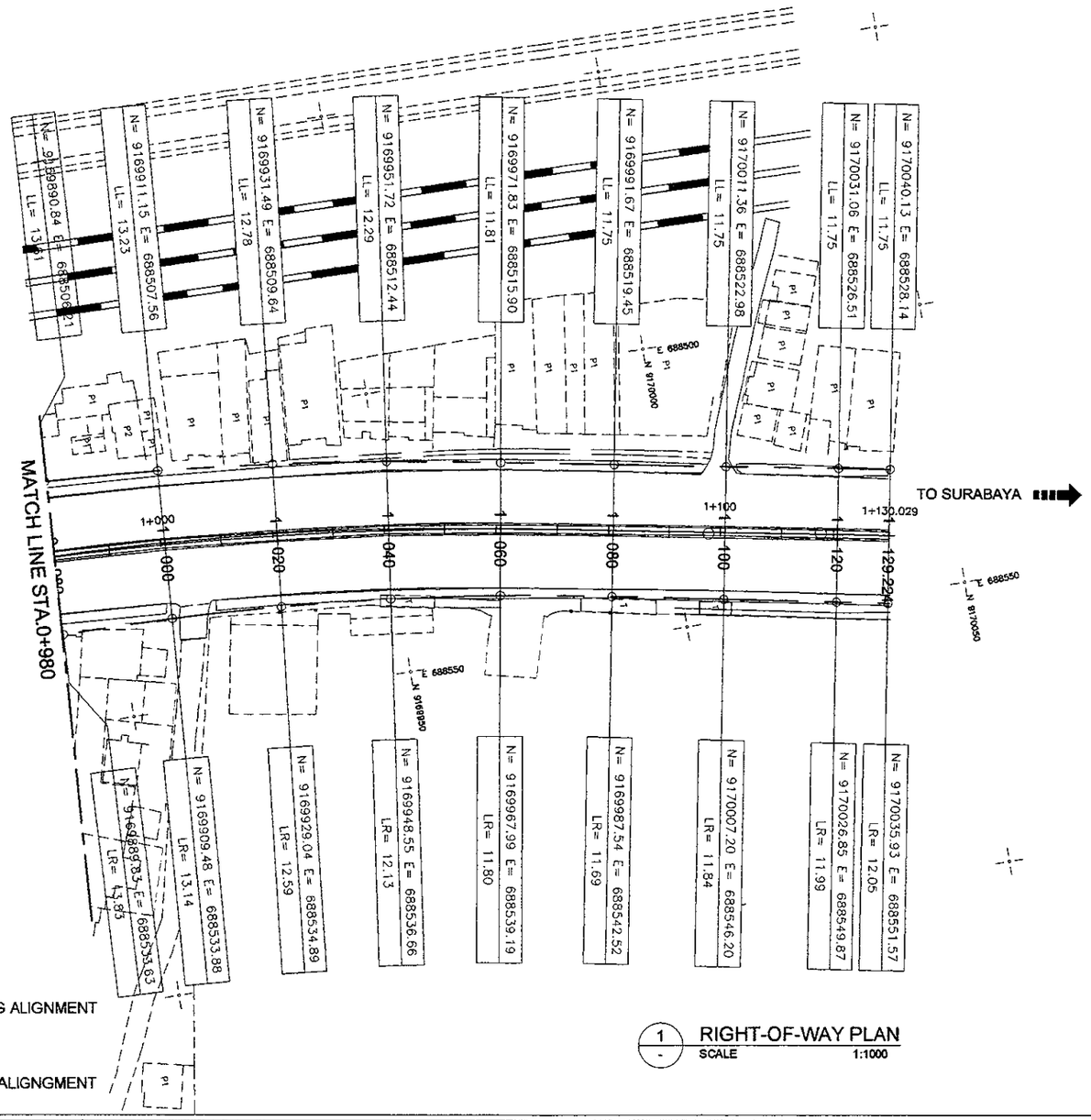


LEGEND :

0+640 EXISTING ALIGNMENT

0+500 DESIGN ALIGNGMENT

1 RIGHT-OF-WAY PLAN
SCALE 1:1000

| JAPAN INTERNATIONAL COOPERATION AGENCY / KATAHIRA & ENGINEERS INTERNATIONAL | DESIGNED BY | CHECKED BY | SUBMITTED BY | REPUBLIC OF INDONESIA<br>MINISTRY OF PUBLIC WORKS<br>DIRECTORATE GENERAL OF HIGHWAYS | PROJECT AND LOCATION : | SCALE : | DRAWING TITLE : | DRAWING NO : |
|---|---|---|---|---|---|---|---|---|
| | Name: R. UENO | Name: T. OKUMURA | Name: M. KIUCHI | | DETAILED DESIGN STUDY OF<br>NORTH JAVA CORRIDOR FLYOVER PROJECT<br>TANGGULANGIN FLYOVER - CONTRACT PACKAGE 3<br>( PETERONGAN -TANGGULANGIN )<br>EAST JAVA PROVINCE | NTS | GEOMETRIC DESIGN STANDARD<br>1 OF 3 | TRD-049 |
| | Sign | Sign | Sign | APPROVED BY: ir. HERRY VAZA M,Eng.Sc<br>NIP. : 110038400 | | | | SHEET NO : |
| | Date | Date | Date | Sign / Date | | FULL SIZE A3 | | 49 / 62 |

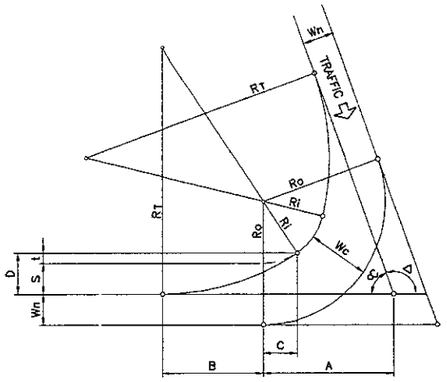


NOTES

- RELATIVE PATHS OF RIGHT TURNING VEHICLES ARE IMAGINARY ONLY; OVERALL, THESE WILL DETERMINE THE CONFIGURATION OF CHANNELI-ZATION ISLANDS IN INTERSECTION DESIGN.
- Ro AS DEFINED BY CONDITION OBTAINING AND Wc IN CONFORMANCE WITH DESIGN VEHICLES AND Ro.

( ADOPTED FROM JAPANESE STANDARDS )

AND/OR "GEOMETRIC JALAN PERKOTAAN" RSNI T-14-2004

WHERE

Wn = LANE WIDTH (NORMAL)
Wc = LANE WIDTH (TURNING)
Δ = INTERSECTION ANGLE
Ro = OUTER RADIUS
Ri = INNER RADIUS
$R_T$ = TRANSITION RADIUS
αC = 180° − Δ

FORMULAS

Ri = Ro−Wc
RT = nRi (n=3)
S = Wc−Wn
t = S/(n−1)
A = (Ri+S) COT αC/2
$B = \sqrt{2\,(R_T - R_i)\,S - S^2}$
C = B/(n−1)
D = S + t

## RIGHT TURN LANE/S ELEMENTS THREE CENTERED CURVE-SYMMETRICAL

1 - NOT TO SCALE

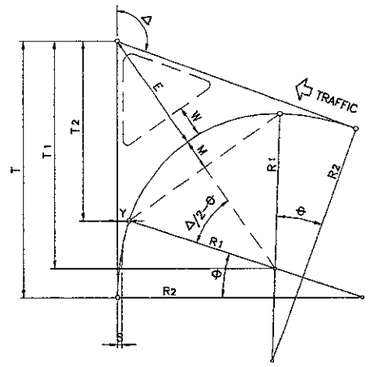


NOTES

- FORMULAS DERIVED BELOW ARE FOR FIELD LAYOUT PURPOSE ( DRAWING LAYOUT BY GRAPHICAL SOLUTION ONLY. )
- DESIGN RADII ( R1, R2 & R3 ) AND OFFSET S AS WELL AS LANE WIDTH W ( WHERE CORNER ISLANDS ARE REQUIRED UNDER CONDITIONS OBTAINING )

WHERE

Δ = INTERSECTION ANGLE
R1 = INNER RADIUS
R2 = TRANSITION RADIUS
S = OFFSET OF INNER CIRCULAR CURVE FROM TANGENTS

FORMULAS

T1 = (R1+S) TAN Δ/2
T = T1 + (R2−R1) SIN θ
T2 = T1−R1 SIN θ
Y = (R1+S) − R1 COS θ
$E = \frac{R_1 + S}{\cos \Delta/2} - R_1$
M = R1−R1 COS ( Δ/2−θ)
$\theta = \cos^{-1}\left(\frac{R_2 - R_1 - S}{R_2 - R_1}\right)$

## LEFT TURN/S ELEMENTS THREE CENTERED CURVE-SYMMETRICAL

2 - NOT TO SCALE

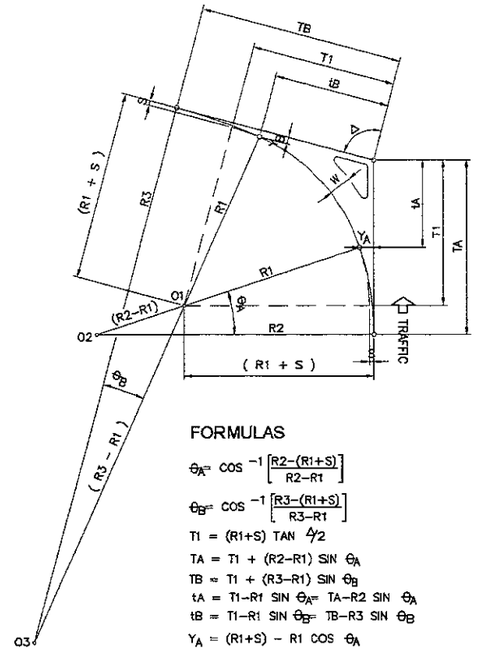


WHERE

R1 = RADIUS OF INTERMEDIATE CIRCULAR ARC
R2= RADIUS OF CIRCULAR ARC ON APPROACH LEG (1.5 x R1)
R3= RADIUS OF CIRCULAR ARC ON DEPARTURE LEG (3 x R1)
S = OFFSET OF INNER CIRCULAR CURVE FROM TANGENTS
Δ = INTERSECTION ANGLE

FORMULAS

$\theta_A = \cos^{-1}\left[\frac{R2-(R1+S)}{R2-R1}\right]$
$\theta_B = \cos^{-1}\left[\frac{R3-(R1+S)}{R3-R1}\right]$
T1 = (R1+S) TAN Δ/2
TA = T1 + (R2−R1) SIN $\theta_A$
TB = T1 + (R3−R1) SIN $\theta_B$
tA = T1−R1 SIN $\theta_A$= TA−R2 SIN $\theta_A$
tB = T1−R1 SIN $\theta_B$= TB−R3 SIN $\theta_B$
$Y_A$ = (R1+S) − R1 COS $\theta_A$
$Y_B$ = (R1+S) − R1 COS $\theta_B$

## LEFT TURN/S ELEMENTS THREE CENTERED CURVE-ASYMMETRICAL

3 - NOT TO SCALE

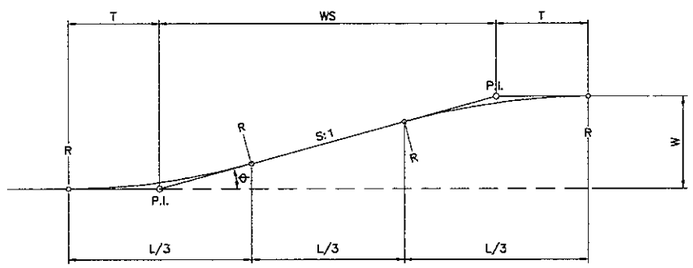


FORMULAS

$\theta = \tan^{-1} 1/S$ (TAPER RATE S:1)
$T = \frac{WS}{3\cos\theta + 1}$
L/3 = T (COS θ+ 1)
$R = \frac{T}{\tan \theta/2}$

APPROX.

T = L/6
$\theta = \tan^{-1} W/4T$

| OPERATING SPEED | S VALUE |
|---|---|
| 40 KPH | 8 |
| 50 KPH | (10) |
| 60 KPH | (12.5) |
| PARKING TURNOUT (ENTRANCE / EXIT) | 2 |
| BUS TURNOUT (DESIRABLE MIN) | 4 |

(S VALUE SHOWN IN PARENTHESIS WERE INTERPOLATED FROM AASHTO )

## ROADWAY TAPERING - L/3 TAN SECTION (CIRCULAR CURVE ROUNDING)

4 - NOT TO SCALE

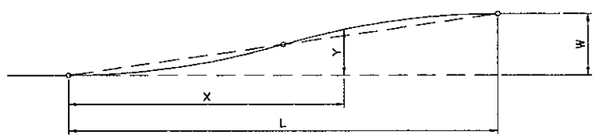


FORMULAS

L = CWS
(C=1 MINIMUM)
(C=2 DESIRABLE)
Y = KW

WHERE

L = LENGTH OF FLARE
W = WIDENING (MAX. OFFSET)
S = TAPER RATE (HOR:VER)
X = DISTANCE ALONG BASELINE
Y = OFFSET FROM BASELINE

LAYOUT BY OFFSET

| X/L | 0.00 | 0.05 | 0.10 | 0.15 | 0.20 | 0.25 | 0.30 | 0.35 | 0.40 | 0.45 | 0.50 | 0.55 | 0.60 | 0.65 | 0.70 | 0.75 | 0.80 | 0.85 | 0.90 | 0.95 | 1.00 |
|---|---|---|---|---|---|---|---|---|---|---|---|---|---|---|---|---|---|---|---|---|---|
| K | 0.000 | 0.005 | 0.020 | 0.045 | 0.080 | 0.125 | 0.180 | 0.245 | 0.320 | 0.405 | 0.500 | 0.595 | 0.680 | 0.755 | 0.820 | 0.875 | 0.920 | 0.955 | 0.980 | 0.995 | 1.000 |

## ROADWAY TAPERING - REVERSED PARABOLIC CURVE FLARES - SYMMETRICAL

5 - NOT TO SCALE

| JAPAN INTERNATIONAL COOPERATION AGENCY / KATAHIRA & ENGINEERS INTERNATIONAL | DESIGNED BY | CHECKED BY | SUBMITTED BY | REPUBLIC OF INDONESIA<br>MINISTRY OF PUBLIC WORKS<br>DIRECTORATE GENERAL OF HIGHWAYS | PROJECT AND LOCATION : | SCALE : | DRAWING TITLE : | DRAWING NO : |
|---|---|---|---|---|---|---|---|---|
| | Name: R. UENO | Name: T. OKUMURA | Name: M. KIUCHI | | DETAILED DESIGN STUDY OF<br>NORTH JAVA CORRIDOR FLYOVER PROJECT<br>TANGGULANGIN FLYOVER - CONTRACT PACKAGE 3<br>( PETERONGAN -TANGGULANGIN )<br>EAST JAVA PROVINCE | NTS | GEOMETRIC DESIGN STANDARD<br>2 OF 3 | TRD-050 |
| | Sign | Sign | Sign | APPROVED BY: Ir. HERRY VAZA M,Eng.Sc<br>NIP. : 110038400 | | | | SHEET NO : |
| | Date | Date | Date | Sign / Date | | FULL SIZE A3 | | 50 / 62 |

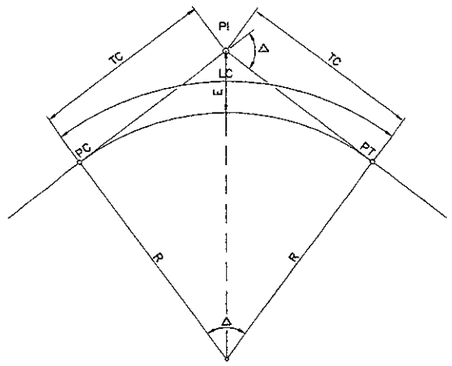


WHERE

PI = POINT OF INTERSECTION
Δ = INTERSECTION ANGLE
R = CURVE RADIUS
T = TANGENT LENGTH
LC = CURVE LENGTH
E = EXTERNAL DISTANCE
PC = BEGINNING OF CIRCULAR CURVE
PT = END OF CIRCULAR CURVE

FORMULAS

$T = R(\tan \Delta/2)$

$LC = \frac{\pi R \Delta}{180}$

$E = T(\tan \Delta/4)$

## 1 HORIZONTAL CURVE (CIRCULAR)

NOT TO SCALE

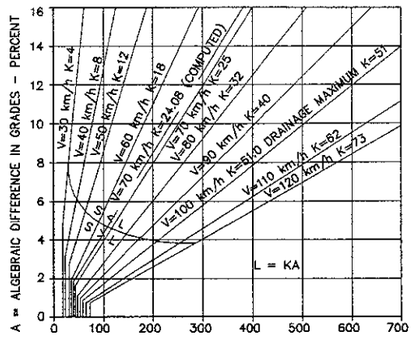


L = MINIMUM LENGTH OF SAG VERTICAL CURVES – METERS
K = RATE OF VERTICAL CURVE
LENGTH OF VERTICAL CURVE (m) PER ALGEBRAIC DIFFERENCE OF INTERSECTING GRADES (%)

FORMULA

$L = \frac{AS^2}{120 + 3.53}$ WHEN $S < L$

$L = 25 - \left(\frac{120 + 3.5S}{A}\right)$ WHEN $S > L$

S = STOPPING SIGN DISTANCE (m)
A = ALGEBRAIC DIFFERENCE IN GRADE (%)

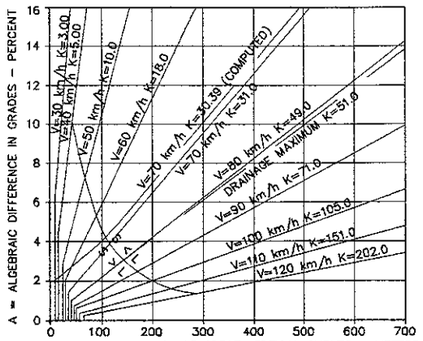


L = MINIMUM LENGTH OF CREST VERTICAL CURVES – METERS
K = RATE OF VERTICAL CURVE
LENGTH OF VERTICAL CURVE (m) PER ALGEBRAIC DIFFERENCE OF INTERSECTING GRADES (%)

FORMULA

$L = \frac{AS^2}{65\,S}$ $L = 25 - \frac{65\,S}{A}$

WHEN

S = S < L : S > L

## 3 DESIGN CONTROLS FOR VERTICAL CURVES

NOT TO SCALE

NOTE

NO HORIZONTAL CURVE IS REQUIRED WHEN
THE INTERSECTION ANGLE IS LESS THAN ONE DEGREE (1°)

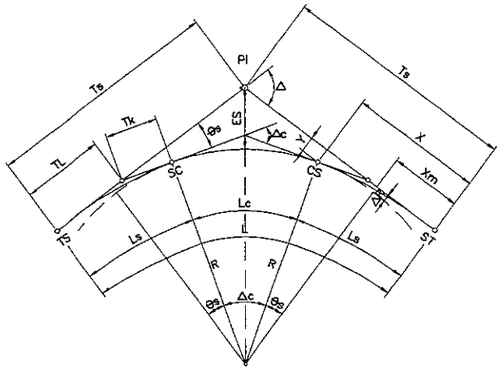


WHERE

PI = POINT OF INTERSECTION
Δ = INTERSECTION ANGLE
R = CURVE RADIUS
Es = EXTERNAL DISTANCE
Ls = LENGTH OF SPIRAL
A = PARAMETER OF CLOTHOID
θs = SPIRAL ANGLE
X,Y = COORDINATES OF POINTS SC AND CS WITH RESPECT TO MAIN TANGENTS
ΔR = OFFSET BETWEEN CIRCULAR CURVE AND MAIN TANGENT ("THROW" OF SPIRAL)
Xm = DISTANCE FROM TS OR ST TO POINT OF "THROW"

Ts = TOTAL TANGENT DISTANCE
TL = LONG TANGENT OF SPIRAL
Tk = SHORT TANGENT OF SPIRAL
L = TOTAL LENGTH OF CURVE
Δc = CENTRAL ANGLE OF CIRCULAR CURVE
Lc = LENGTH OF CIRCULAR CURVE
TS = BEGINNING OF TRANSITION CURVE
SC = BEGINNING OF CIRCULAR CURVE
CS = END OF CIRCULAR CURVE
ST = END OF TRANSITION CURVE

FORMULAS:

$A^2 = R(Ls)$

$\theta s = Ls(D/40)$

$x = Ls\left(1 - \frac{Ls^2}{40R^2}\right)$

$y = \frac{Ls^2}{6R}\left(1 - \frac{Ls^2}{56R^2}\right)$

$\Delta R = y + R\cos\theta s - R$

$Xm = x - R\sin\theta s$

$T = (R + \Delta R)\tan\Delta/2$

$Ts = Xm + T$

$\Delta c = \Delta - 2\theta s$

$Lc = \pi R\,\Delta c/180$

$TL = x - (y/\tan\theta s)$

$Tk = \frac{y}{\sin\theta s}$

$Es = \left[\left(R + \frac{y}{4}\right)\sec\frac{\Delta}{2}\right] - R$

RAILWAY CROSSING

FORMULA

$L1 = 15.0 + 4(N-1)$

WHERE

L1 = MINIMUM LENGTH OF VISIBLE RAILWAY CROSSING
N = NO. OF RAILWAY TRACK

## 2 HORIZONTAL CURVE WITH TRANSITION (CLOTHOID SPIRAL)

NOT TO SCALE

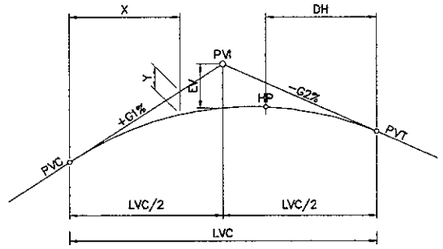


K = LVC / A.D

WHERE

PVI = VERTICAL POINT OF INTERSECTION
AD = ALGEBRAIC DIFFERENCE OF INTERSECTING GRADES
K = RATE OF VERTICAL CURVE
LVC = LENGTH OF VERTICAL CURVE
EV = VERTICAL OFFSET
PVC = VERTICAL POINT OF CURVATURE
PVT = VERTICAL POINT OF TANGENCY
G1, G2 = TANGENT GRADES IN PERCENT
MO = MIDDLE ORDINATE
X = DISTANCE FROM PVC TO PVT TO ANY POINT OF CURVE
Y = VERTICAL OFFSET AT SAID DISTANCE "X"
HP = HIGH POINT OF CURVE
DH = DISTANCE OF "HP" FROM CURVE END RECKONED FROM FLATTER GRADE

FOR SYMMETRICAL VERTICAL PARABOLIC CURVES

$EV = \frac{(G1-G2)}{100} \cdot \frac{L}{8}$

$Yx = \frac{(G1-G2)}{100} \cdot \frac{X^2}{2LVC}$

$DH = \frac{GLVC}{(G1-G2)}$

(WHERE G IS THE LESSER GRADE)

NOTES
1. SIMILARLY APPLIES TO LP (LOW POINT) OF SAG VERTICAL CURVES
2. NO VERTICAL CURVE IS REQUIRED WHERE THE ALGEBRAIC DIFFERENCE IN GRADE IS 0.50% OR LESS

## 4 VERTICAL PARABOLIC CURVE (SYMMETRICAL)

NOT TO SCALE

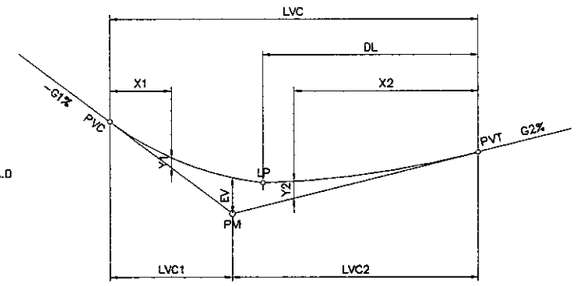


WHERE :

LVC1 = SHORT SIDE OF VERTICAL CURVE LENGTH
LVC2 = LONG SIDE OF VERTICAL CURVE LENGTH
LP = LOW POINT OF CURVE
DL = DISTANCE OF LP FROM CURVE END RECKONED FROM FLATTER GRADE

ALL OTHER NOMENCLATURE SAME AS SYMMETRICAL PARABOLIC CURVE

FOR ASYMMETRICAL VERTICAL PARABOLIC CURVES

$EV = \frac{(G1-G2)}{100} \cdot \frac{L1\,L2}{2L}$ $Y2 = \frac{X2^2}{L2^2} \cdot EV$

$Y1 = \frac{X1^2}{L1^2} \cdot EV$

$DL = \frac{G2\,L2}{L1} \cdot K$

$K = \frac{L}{G1+G2}$

NOTES :
1. SIMILARLY APPLIES TO HP (HIGH POINT) OF CREST VERTICAL CURVES
2. NO VERTICAL CURVE IS REQUIRED WHERE THE ALGEBRAIC DIFFERENCE IN GRADE IS 0.50% OR LESS

## 5 VERTICAL PARABOLIC CURVE (ASYMMETRICAL)

NOT TO SCALE

| JAPAN INTERNATIONAL COOPERATION AGENCY / KATAHIRA & ENGINEERS INTERNATIONAL | DESIGNED BY | CHECKED BY | SUBMITTED BY | REPUBLIC OF INDONESIA<br>MINISTRY OF PUBLIC WORKS<br>DIRECTORATE GENERAL OF HIGHWAYS | PROJECT AND LOCATION : | SCALE : | DRAWING TITLE : | DRAWING NO : |
|---|---|---|---|---|---|---|---|---|
| | Name: R. UENO | Name: T. OKUMURA | Name: M. KIUCHI | | DETAILED DESIGN STUDY OF<br>NORTH JAVA CORRIDOR FLYOVER PROJECT<br>TANGGULANGIN FLYOVER - CONTRACT PACKAGE 3<br>( PETERONGAN -TANGGULANGIN )<br>EAST JAVA PROVINCE | NTS | GEOMETRIC DESIGN STANDARD<br>3 OF 3 | TRD-051 |
| | Sign | Sign | Sign | APPROVED BY: Ir. HERRY VAZA M,Eng.Sc<br>NIP. : 110038400 | | | | SHEET NO : |
| | Date | Date | Date | Sign / Date | | FULL SIZE A3 | | 51 / 62 |

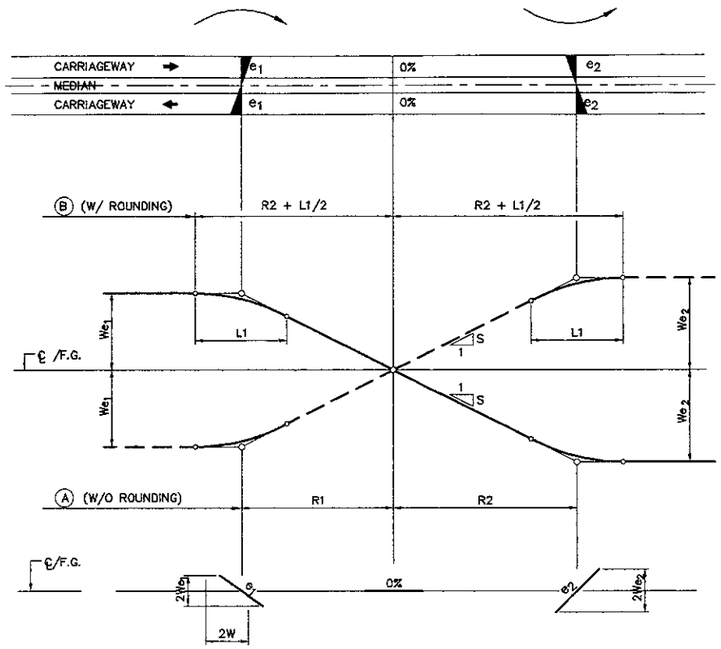


$R1 = \frac{We_1}{S}$

$R2 = \frac{We_2}{S}$

$L1 = \frac{Wnc}{S}$

**WHERE**

R1 = LENGTH OF SUPERELEV. RUNOFF (1st CURVE)

R2 = LENGTH OF SUPERELEV. RUNOFF (2nd CURVE)

L1 = LENGTH OF ROUNDING

ALL OTHER NOMENCLATURE THE SAME

## TANGGULANGIN FLYOVER PIER

| STATION | | SUPERELEVATION LEFT | SUPERELEVATION RIGHT |
|---|---|---|---|
| A1 | 0+542.00 | 3.800 | -2.000 |
| P1 | 0+562.00 | 5.000 | -2.000 |
| P2 | 0+582.00 | 5.000 | -2.000 |
| P3 | 0+607.00 | 2.714 | -2.000 |
| P4 | 0+632.00 | 0.000 | -2.000 |
| P5 | 0+657.00 | -2.500 | 2.500 |
| P6 | 0+682.00 | -5.000 | 2.500 |
| P7 | 0+702.00 | -5.000 | 2.500 |
| P8 | 0+722.00 | 2.500 | 2.500 |
| A2 | 0+742.00 | 2.500 | 2.500 |

## S VALUE (INTERPOLATED FROM AASHTO)

| DESIGN SPEED Km/h | 40 | 50 | 60 | 70 | 80 | 90 | 100 | 110 | 120 |
|---|---|---|---|---|---|---|---|---|---|
| 100 S | 0.70 | 0.65 | 0.60 | 0.55 | 0.50 | 0.48 | 0.45 | 0.42 | 0.40 |

**NOTES**

1. RATE OF SUPERELEVATION "e" IS AS SHOWN IN TABLE.
2. ROUNDING "L1" IS OPTIONAL AND NECESSARY ONLY IF "S" IS GREATER THAN THAT SHOWN IN TABLE FOR "S" VALUE.
3. SIDEWALKS SHALL ALWAYS SLOPE TOWARDS THE TRAVELWAY.
4. SHOULDERS OF THE MAIN ROADS ALWAYS SLOPE AWAY FROM THE TRAVELWAY IRRESPECTIVE OF THE RATE OF SUPERELEVATION, "e".

**WHERE**

LK1 = MIN. LENGTH OF EASEMENT/CLOTHOID (W/O ROUNDING)

LK2 = MIN. LENGTH OF EASEMENT/CLOTHOID (W/ ROUNDING, L1)

R1 = SUPERELEVATION RUNOUT LENGTH (WITHIN CLOTHOID) *

R2 = SUPERELEVATION RUNOFF LENGTH

L1 = LENGTH OF ROUNDING

W = CARRIAGEWAY WIDTH = 7.00m (2 LANES EACH DIRECTION)

e = SUPERELEVATION

Nc = NORMAL CROWN SLOPE

S = RELATIVE SLOPE OF EDGES TO CENTERLINE

* OTHER AUTHORITIES PLACE R1 WITHIN THE TANGENT

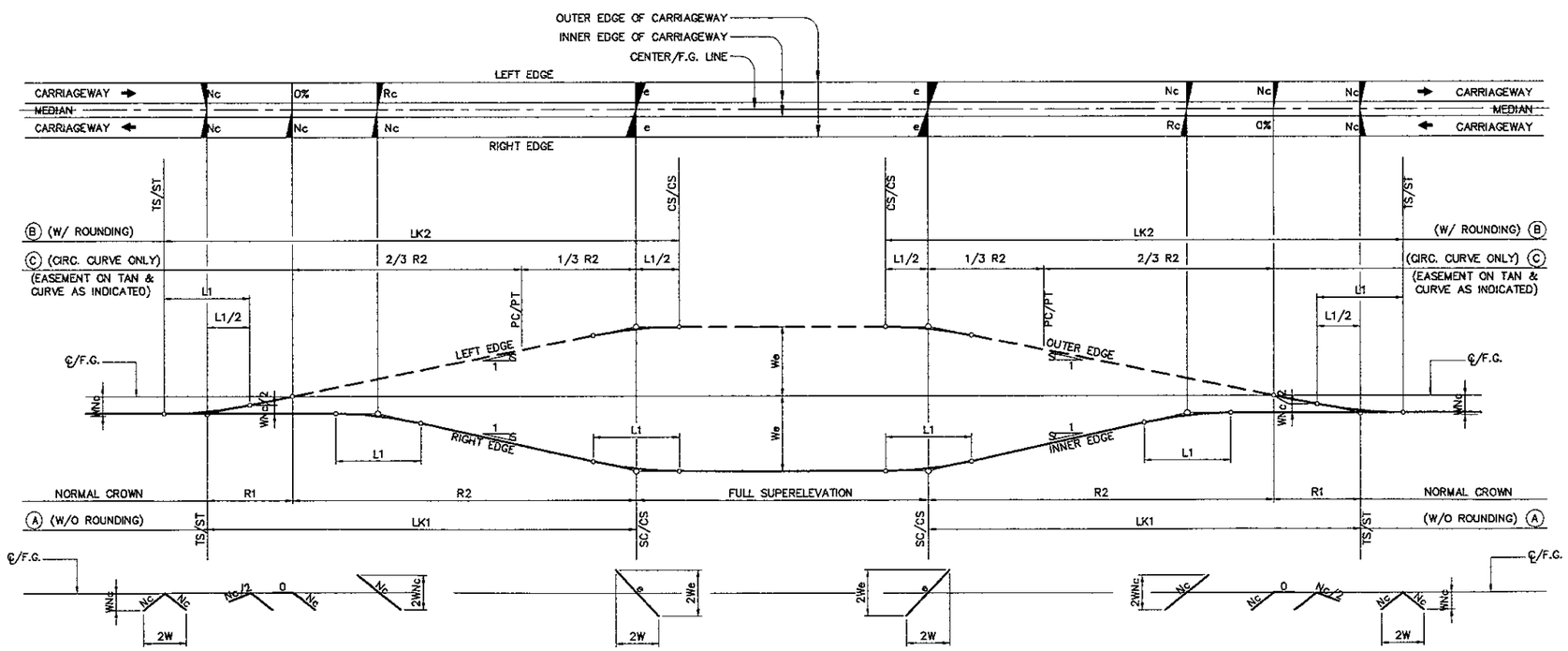


$A^2 = R \times LK$

A = CLOTHOID PARAMETER

$R1 = \frac{WNc}{S}$

$R2 = \frac{We}{S}$

$L1 = \frac{Wnc}{S}$

$LK1 = R1+R2 = \frac{W}{S}(Nc+e)$ (A)

$LK2 = L1+LK1 = \frac{W}{S}(2Nc+e)$ (B)

## 1 SUPERELEVATION TRANSITION FLYOVER

NOT TO SCALE

| JAPAN INTERNATIONAL COOPERATION AGENCY<br>KATAHIRA & ENGINEERS INTERNATIONAL | DESIGNED BY | | CHECKED BY | | SUBMITTED BY | | REPUBLIC OF INDONESIA<br>MINISTRY OF PUBLIC WORKS<br>DIRECTORATE GENERAL OF HIGHWAYS | | | | PROJECT AND LOCATION : | SCALE : | DRAWING TITLE : | DRAWING NO : |
|---|---|---|---|---|---|---|---|---|---|---|---|---|---|---|
| | Name | R. UENO | Name | T. OKUMURA | Name | M. KIUCHI | | | | | DETAILED DESIGN STUDY OF<br>NORTH JAVA CORRIDOR FLYOVER PROJECT<br>TANGGULANGIN FLYOVER - CONTRACT PACKAGE 3<br>( PETERONGAN -TANGGULANGIN )<br>EAST JAVA PROVINCE | NTS | STANDARD ROADWAY SUPERELEVATION | TRD-052 |
| | Sign | | Sign | | Sign | | APPROVED BY | Ir. HERRY VAZA M,Eng.Sc | Sign | | | | | SHEET NO : |
| | Date | | Date | | Date | | | NIP. : 110038400 | Date | | | FULL SIZE A3 | | 52 / 62 |

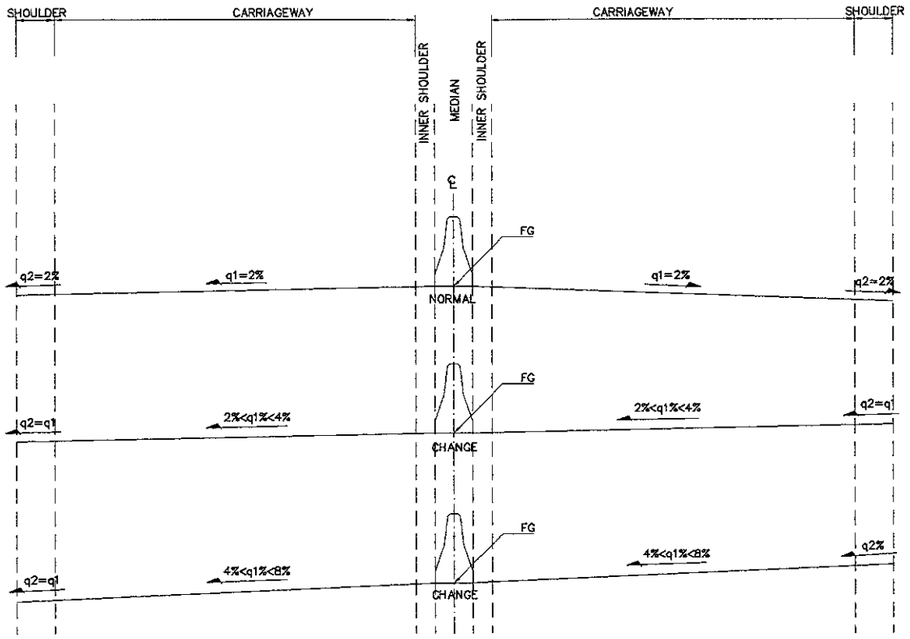


|q1|+|q2|<8%

1 - MAIN ROAD / FLYOVER
NOT TO SCALE

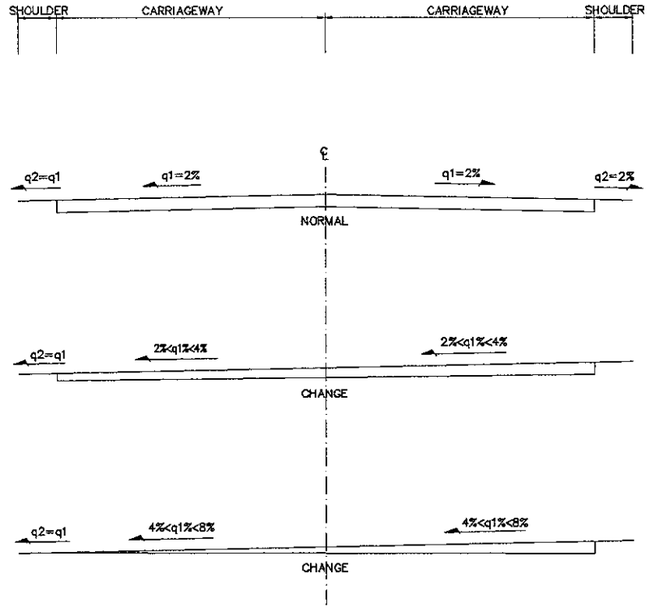


2 - SUPERELEVATED ( EXISTING 2-LANE, 2-WAY )
NOT TO SCALE

| TANGGULANGIN FLYOVER | | | |
|---|---|---|---|
| STATION | SUPER ELEVATION | | |
| | FG | LEFT | RIGHT |
| 0+400.00 | 4.007 | −2.000 | −2.000 |
| 0+500.00 | 7.940 | −1.800 | −2.000 |
| 0+520.00 | 8.940 | 0.867 | −2.000 |
| 0+540.00 | 9.940 | 3.533 | −3.533 |
| 0+560.00 | 10.940 | 5.000 | −5.000 |
| 0+600.00 | 12.619 | 3.714 | −3.714 |
| 0+700.00 | 11.904 | −5.00 | 5.000 |
| 0+800.00 | 6.940 | −2.000 | −1.867 |
| 0+820.00 | 5.940 | −2.000 | 0.800 |
| 0+860.00 | 4.217 | −3.500 | 3.500 |
| 0+900.00 | 3.446 | −3.500 | 3.500 |

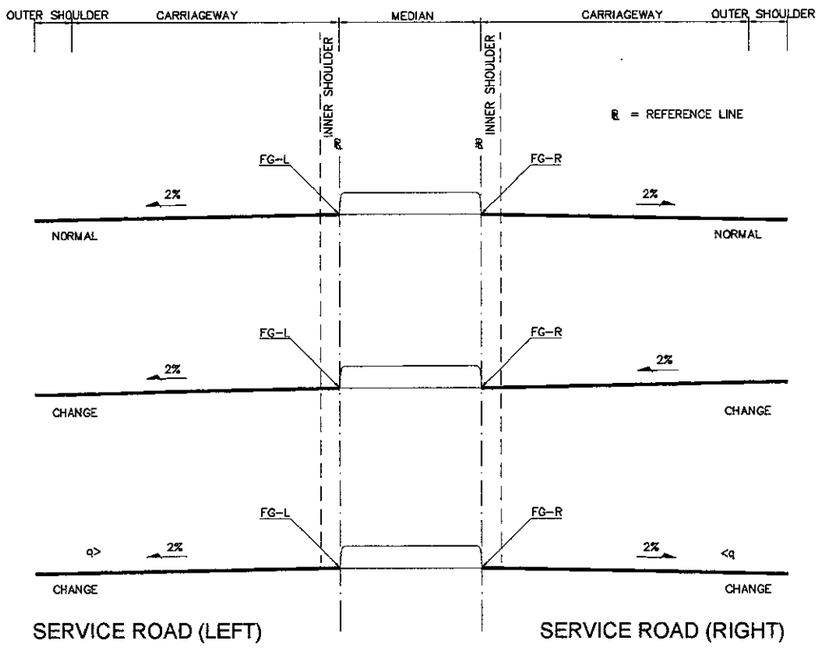


| R (m) | Vd = 40 km/hr | | | Vd = 50 km/hr | | | Vd = 60 km/hr | | |
|---|---|---|---|---|---|---|---|---|---|
| | e | L (m) | | e | L (m) | | e | L (m) | |
| | % | 2 Lns | 4 Lns | % | 2 Lns | 4 Lns | % | 2 Lns | 4 Lns |
| 1000 | NC | 0 | 0 | RC | 11 | 17 | 2,1 | 13 | 19 |
| 900 | NC | 0 | 0 | RC | 11 | 17 | 2,3 | 14 | 21 |
| 800 | NC | 0 | 0 | RC | 11 | 17 | 2,5 | 15 | 23 |
| 700 | RC | 10 | 15 | 2,1 | 12 | 17 | 2,8 | 17 | 25 |
| 600 | RC | 10 | 15 | 2,4 | 13 | 22 | 3,1 | 19 | 28 |
| 500 | 2,1 | 11 | 16 | 2,8 | 15 | 20 | 3,5 | 21 | 32 |
| 400 | 2,5 | 13 | 19 | 3,3 | 18 | 23 | 4,0 | 24 | 36 |
| 300 | 3,1 | 16 | 24 | 3,9 | 22 | 27 | 4,6 | 28 | 41 |
| 250 | 3,5 | 18 | 27 | 4,2 | 23 | 32 | 5 | 30 | 45 |
| 200 | 3,9 | 20 | 30 | 4,7 | 26 | 39 | 5,5 | 33 | 50 |
| 175 | 4,1 | 21 | 32 | 5,0 | 28 | 42 | 5,8 | 35 | 52 |
| 150 | 4,4 | 23 | 34 | 5,3 | 29 | 44 | 6,0 | 36 | 54 |
| 140 | 4,5 | 23 | 35 | 5,4 | 30 | 45 | 6,0 | 36 | 54 |
| 130 | 4,6 | 24 | 35 | 5,6 | 31 | 47 | Rmin = | | 135 |
| 120 | 4,8 | 25 | 37 | 5,7 | 32 | 47 | | | |
| 110 | 5,0 | 26 | 39 | 5,8 | 32 | 48 | | | |
| 100 | 5,2 | 27 | 40 | 6,0 | 33 | 50 | | | |
| 90 | 5,4 | 28 | 42 | 6,0 | 33 | 50 | | | |
| 80 | 5,6 | 29 | 43 | Rmin = | | 90 | | | |
| 70 | 5,8 | 30 | 45 | | | | | | |
| 60 | 6,0 | 31 | 46 | | | | | | |
| | Rmin = | | 55 | | | | | | |

WHERE :

$e_{max}$ = 6%
R = RADIUS OF CURVE
Vd = DESIGN SPEED
e = RATE OF SUPERELEVATION
L = MINIMUM LENGHT OF RUNOFF (DOES NOT INCLUDE TANGET RUNOUT) AS DISCUSSED IN TANGENT TO CURVE TRANSITION SECTION
NC = NORMAL CROWN SECTION
RC = REMOVE CROWN SECTION, SUPERELEVATED AT NORMAL CROWN SLOPE

| JAPAN INTERNATIONAL COOPERATION AGENCY / KATAHIRA & ENGINEERS INTERNATIONAL | DESIGNED BY | CHECKED BY | SUBMITTED BY | REPUBLIC OF INDONESIA<br>MINISTRY OF PUBLIC WORKS<br>DIRECTORATE GENERAL OF HIGHWAYS | PROJECT AND LOCATION : | SCALE : | DRAWING TITLE : | DRAWING NO : |
|---|---|---|---|---|---|---|---|---|
| | Name: R. UENO | Name: T. OKUMURA | Name: M. KIUCHI | | DETAILED DESIGN STUDY OF<br>NORTH JAVA CORRIDOR FLYOVER PROJECT<br>TANGGULANGIN FLYOVER - CONTRACT PACKAGE 3<br>( PETERONGAN -TANGGULANGIN )<br>EAST JAVA PROVINCE | NTS | STANDARD THREE LEG & FOUR LEG OF INTERSECTION | TRD-053 |
| | Sign: | Sign: | Sign: | APPROVED BY: Ir. HERRY VAZA M,Eng.Sc<br>NIP. : 110038400 | | | | SHEET NO : 53 / 62 |
| | Date: | Date: | Date: | Sign:<br>Date: | | FULL SIZE A3 | | |

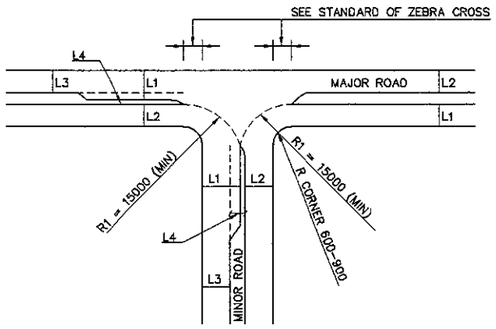


NOTES : – L1 (WITHOUT TRAFFIC LIGHT) BASED FROM CAPACITY OF INTERSECTION)
L1 (WITH TRAFFIC LIGHT) BASED FROM CAPACITY OF TRAFFIC LIGHT ANALYSIS
– MINIMUM ABSOLUTE WIDTH L4 = 2.75 M
OR : L4 = L1 – L3 > = 2.75 M

## A. TYPICAL OF THREE LEGS INTERSECTION

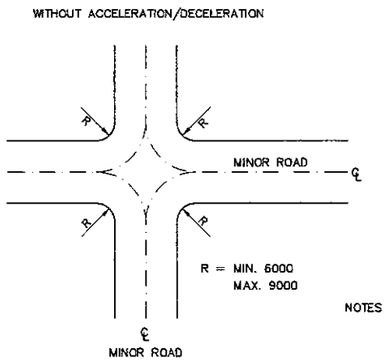


NOTES : – SEE STANDARD ROAD MARKING
– TAPER AND STORAGE NEEDED BASED ON TRAFFIC ANALYSIS

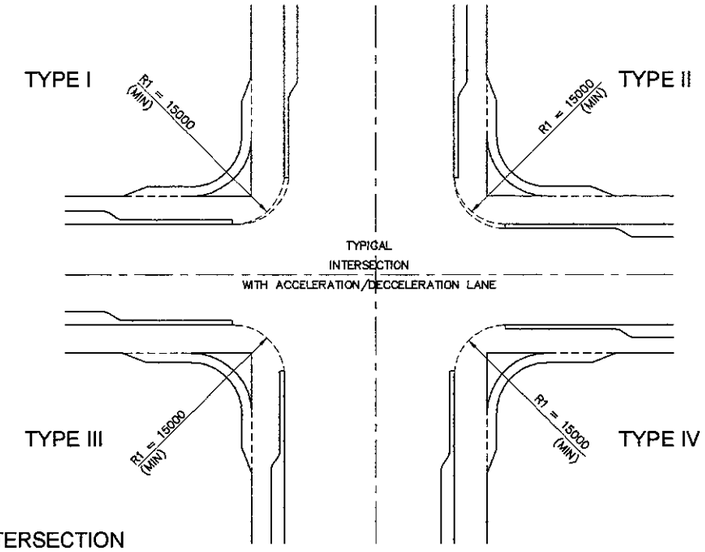


## B. TYPICAL OF FOUR LEGS INTERSECTION

1. DECELERATION WITHOUT STORAGE

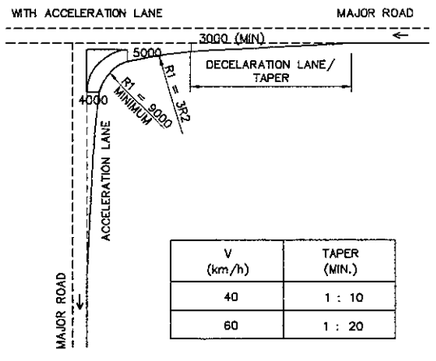


| V (km/h) | TAPER (MIN.) |
|---|---|
| 40 | 1 : 10 |
| 60 | 1 : 20 |

2. DECELERATION WITH STORAGE

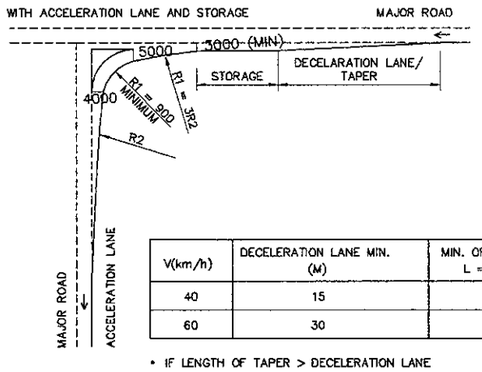


| V(km/h) | DECELERATION LANE MIN. (M) | MIN. OF TAPER LENGTH L = V x dw/6m |
|---|---|---|
| 40 | 15 | 20 |
| 60 | 30 | 30 |

• IF LENGTH OF TAPER > DECELERATION LANE
TAPER ASSUMED AS DECELERATION LANE

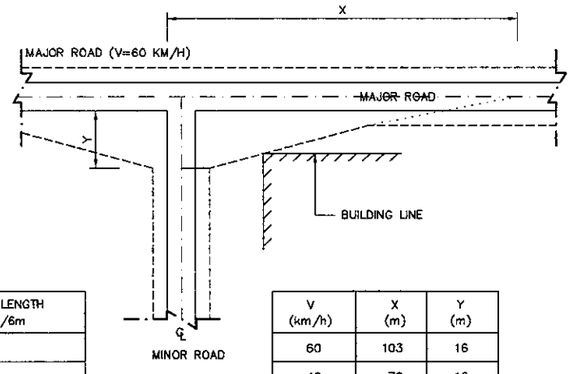


| V (km/h) | X (m) | Y (m) |
|---|---|---|
| 60 | 103 | 16 |
| 40 | 70 | 16 |

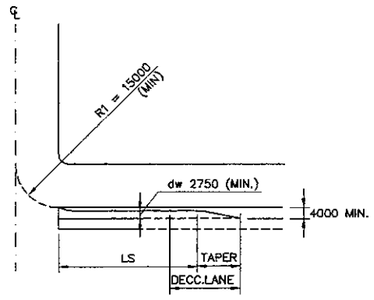


## D. TYPICAL RIGHT TURN FROM MAJOR ROAD TO MINOR / MAJOR ROAD

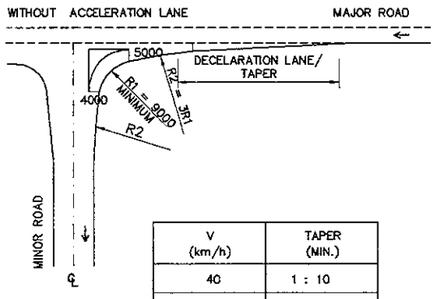


| V (km/h) | TAPER (MIN.) |
|---|---|
| 40 | 1 : 10 |
| 60 | 1 : 20 |

– R MIN. CALCULATED BASED ON SINGLE UNIT TRUCK
– FOR SPECIAL DESIGN, SEE STANDARD OF GEOMETRIC DESIGN

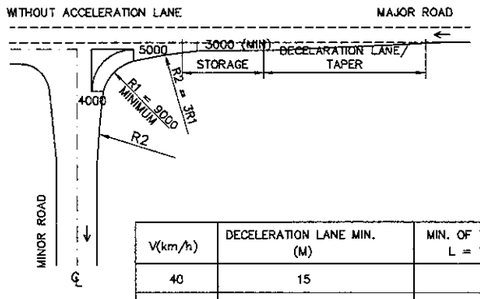


| V(km/h) | DECELERATION LANE MIN. (M) | MIN. OF TAPER LENGTH L = V x dw/6m |
|---|---|---|
| 40 | 15 | 20 |
| 60 | 30 | 30 |

• IF LENGTH OF TAPER > DECELERATION LANE
TAPER BE ASSUMED AS DECELERATION LANE

## E. LEFT TURN LINE

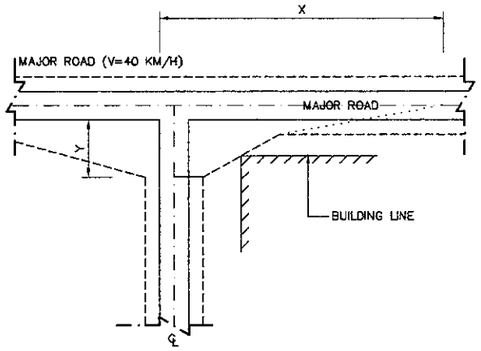


## F. CLEARANCE SIGHT DISTANCE

| V(km/h) | DECELERATION LANE MIN. (M) | MIN. OF TAPER LENGTH L = V x dw/6m |
|---|---|---|
| 40 | 15 | 20 |
| 60 | 30 | 30 |

LENGTH OF STORAGE : LS = 2 x M x S WITHOUT TRAFFIC LIGHT
LS = 15 x N x S WITH TRAFFIC LIGHT

M – NUMBER OF MEANS OF RIGHT TURN VEHICLE/MINUTES
N – NUMBER OF MEANS OF LEFT TURN VEHICLE/CIRCLE
S – DISTANCE TWO VEHICLES (M)

1 / - STANDARD THREE LEG & FOUR LEG INTERSECTION
NOT TO SCALE

| JAPAN INTERNATIONAL COOPERATION AGENCY<br>KATAHIRA & ENGINEERS INTERNATIONAL | DESIGNED BY | CHECKED BY | SUBMITTED BY | REPUBLIC OF INDONESIA<br>MINISTRY OF PUBLIC WORKS<br>DIRECTORATE GENERAL OF HIGHWAYS | PROJECT AND LOCATION : | SCALE : | DRAWING TITLE : | DRAWING NO : |
|---|---|---|---|---|---|---|---|---|
| | Name: R. UENO | Name: T. OKUMURA | Name: M. KIUCHI | | DETAILED DESIGN STUDY OF NORTH JAVA CORRIDOR FLYOVER PROJECT TANGGULANGIN FLYOVER - CONTRACT PACKAGE 3 ( PETERONGAN -TANGGULANGIN ) EAST JAVA PROVINCE | 1 : 150 | STANDARD ASPHALT PAVEMENT | TRD-054 |
| | Sign | Sign | Sign | APPROVED BY: Ir. HERRY VAZA M,Eng.Sc<br>NIP. : 110038400 | | | | SHEET NO : 54 / 62 |
| | Date | Date | Date | Sign / Date | | FULL SIZE A3 | | |

## FLEXIBLE PAVEMENT

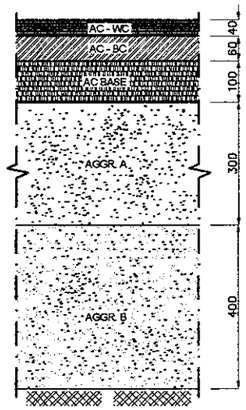


1 - SERVICE ROAD
SCALE 1:150

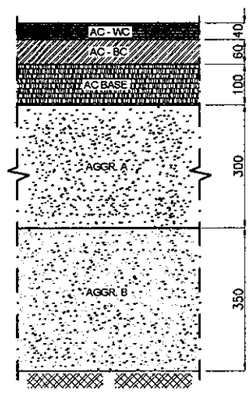


2 - ABUTMENT (APPROACH ROAD)
SCALE 1:150

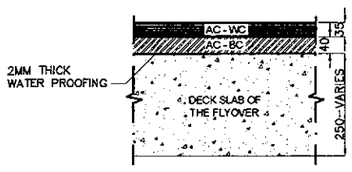


3 - VIADUCT
SCALE 1:150

## EXISTING & NEW PAVEMENT CONNECTION

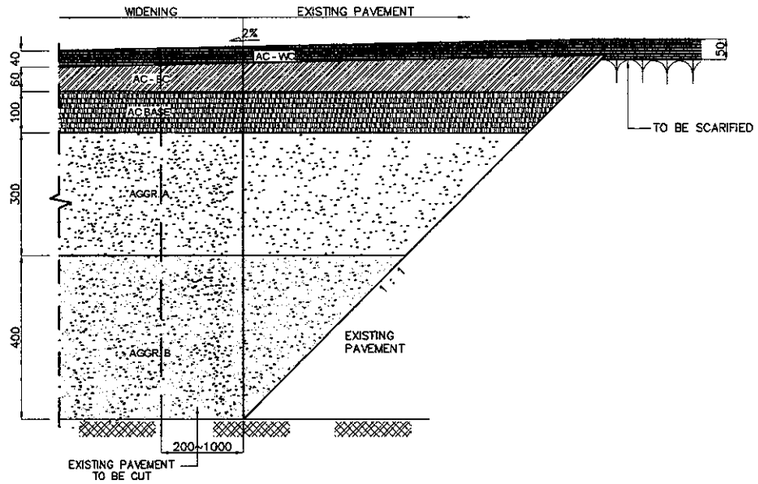


4 - WIDENING ≤ 2000mm
SCALE 1:150

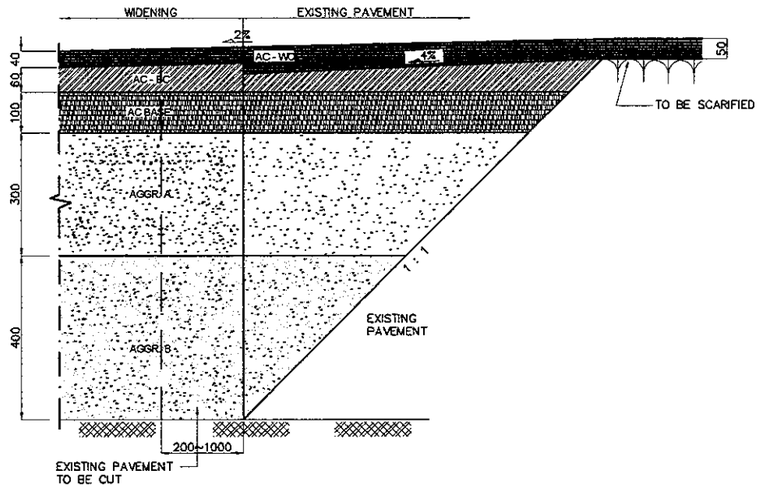


5 - WIDENING > 2000mm
SCALE 1:150

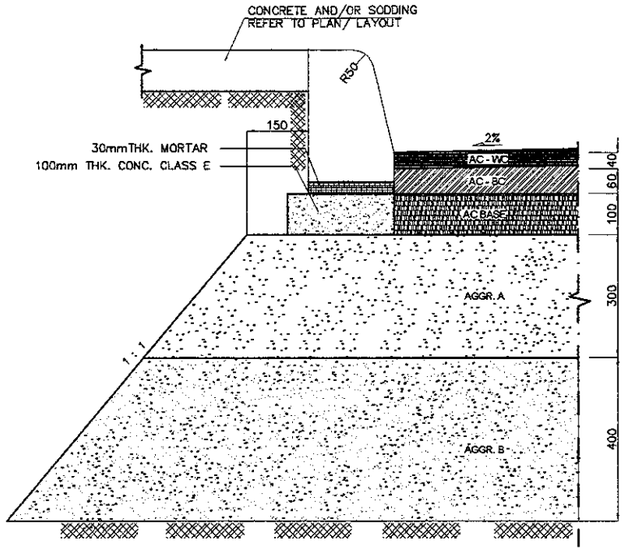


6 - MEDIAN CURB CONNECTION
SCALE 1:150

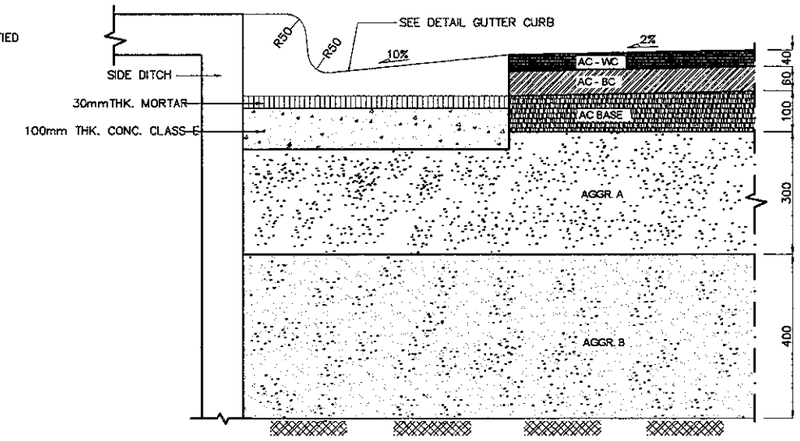


7 - CURB AND GUTTER CONNECTION
SCALE 1:150

## OVERLAY THICKNESS

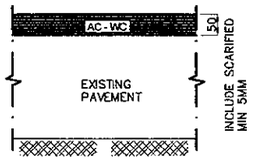


8 - NORMAL OVERLAY
SCALE 1:150

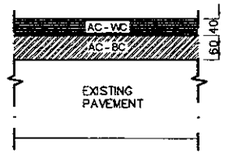


9 - OVERLAY THICKNESS < 50 > 100mm
SCALE 1:150

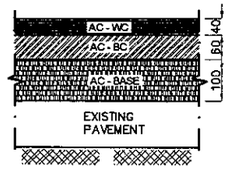


10 - OVERLAY THICKNESS > 100mm
SCALE 1:150

| JAPAN INTERNATIONAL COOPERATION AGENCY<br>KATAHIRA & ENGINEERS INTERNATIONAL | DESIGNED BY | CHECKED BY | SUBMITTED BY | REPUBLIC OF INDONESIA<br>MINISTRY OF PUBLIC WORKS<br>DIRECTORATE GENERAL OF HIGHWAYS | PROJECT AND LOCATION : | SCALE : | DRAWING TITLE : | DRAWING NO : |
|---|---|---|---|---|---|---|---|---|
| | Name: R. UENO | Name: T. OKUMURA | Name: M. KIUCHI | | DETAILED DESIGN STUDY OF<br>NORTH JAVA CORRIDOR FLYOVER PROJECT<br>TANGGULANGIN FLYOVER - CONTRACT PACKAGE 3<br>( PETERONGAN -TANGGULANGIN )<br>EAST JAVA PROVINCE | AS SHOWN | STANDARD PAVEMENT FOR<br>RAILROAD CROSSING | TRD-055 |
| | Sign | Sign | Sign | APPROVED BY: Ir. HERRY VAZA M,Eng.Sc<br>NIP. : 110038400 — Sign | | FULL SIZE A3 | | SHEET NO : 55 / 62 |
| | Date | Date | Date | Date | | | | |

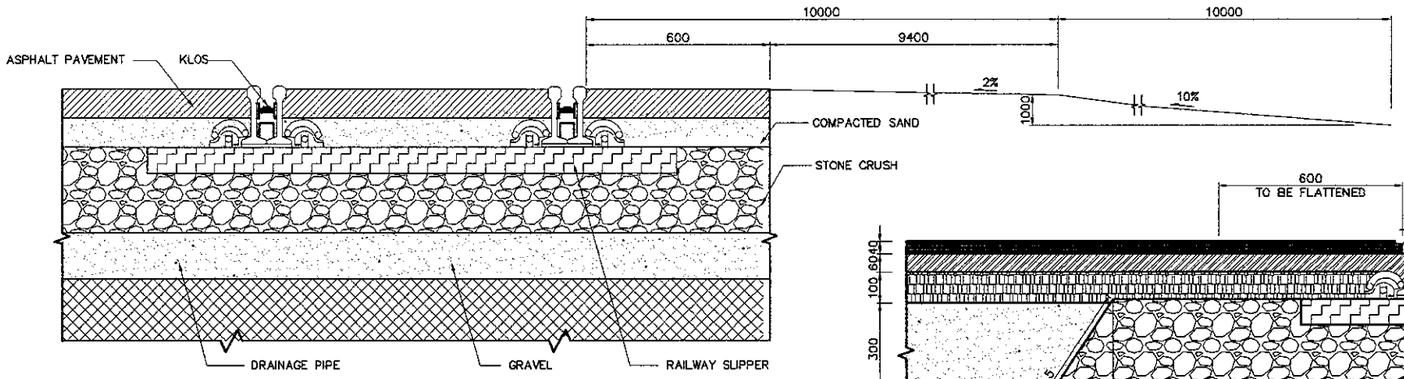


A — MAXIMUM GRADIENT AT RAILROAD CROSSING
NOT TO SCALE

NOTE :
EXISTING ASPHALT CONCRETE SHALL BE REMOVED PRIOR TO OVERLAYING / OR AS DIRECTED BY THE ENGINNER

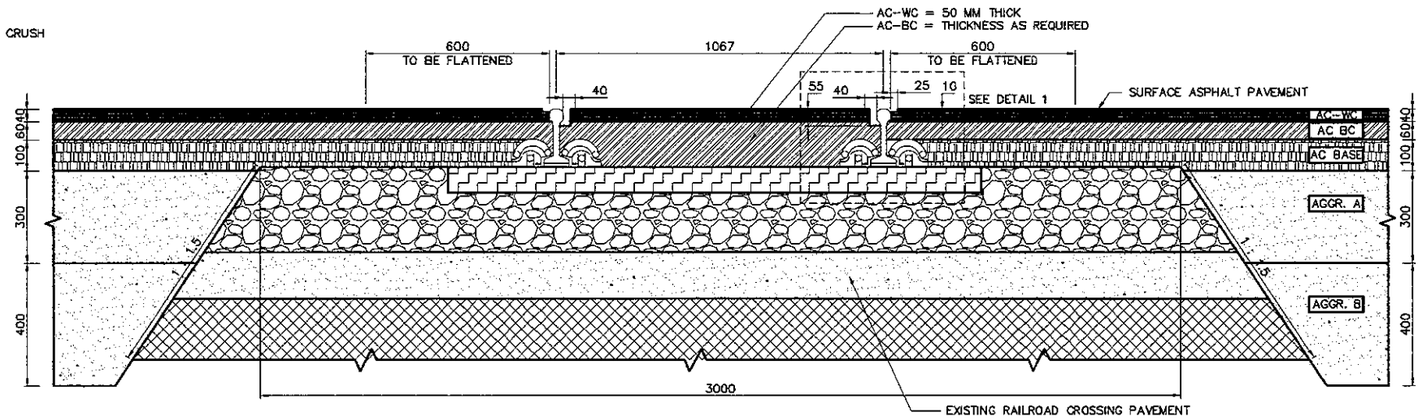


B — ASPHALT ROAD CROSSING ON RAILWAY WITHOUT FLANGE PROTECTION HEADER
SCALE 1 : 20

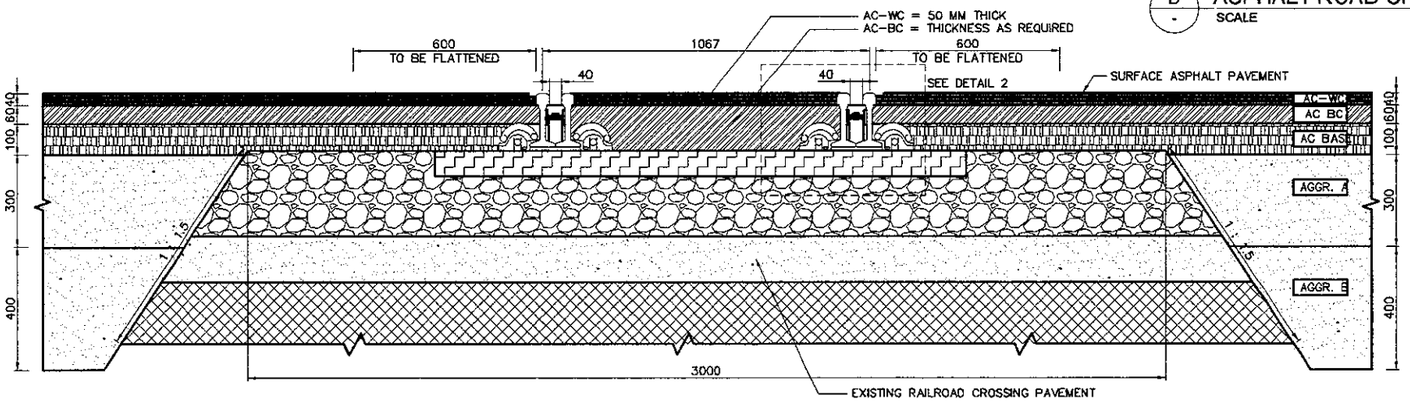


B — ASPHALT ROAD CROSSING ON RAILWAY WITH FLANGE PROTECTION HEADER
SCALE 1 : 20

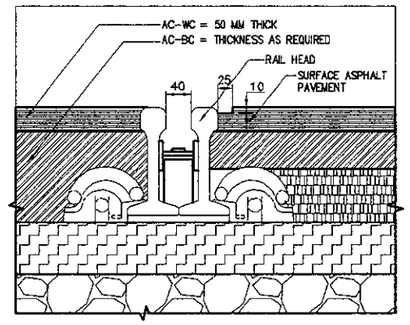


2 — DETAIL 2
SCALE 1 : 10

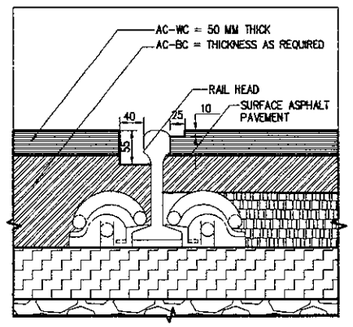


1 — DETAIL 1
SCALE 1 : 10

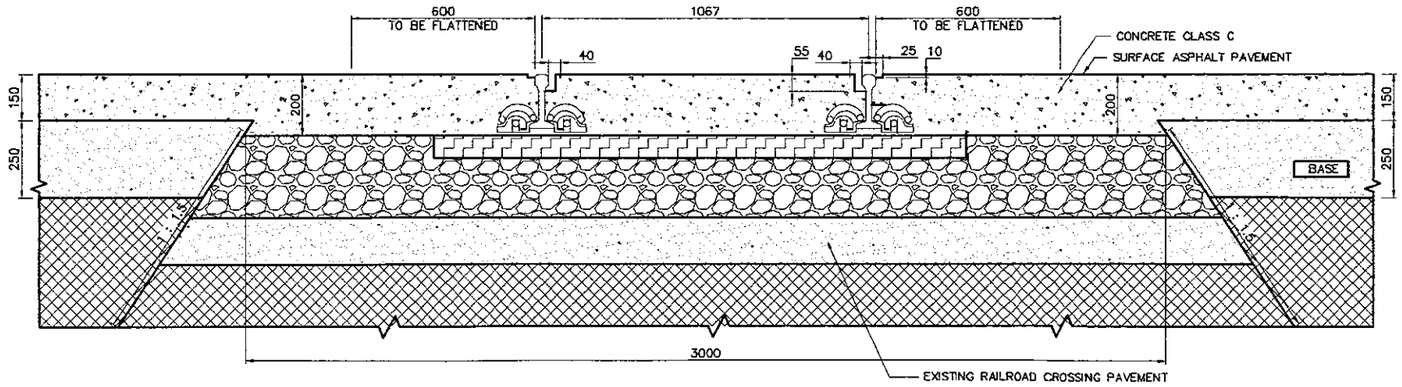


D — CONCRETE SHOULDER AT RAILROAD CROSSING
SCALE 1:20

| JAPAN INTERNATIONAL COOPERATION AGENCY<br>KATAHIRA & ENGINEERS INTERNATIONAL | DESIGNED BY | CHECKED BY | SUBMITTED BY | REPUBLIC OF INDONESIA<br>MINISTRY OF PUBLIC WORKS<br>DIRECTORATE GENERAL OF HIGHWAYS | PROJECT AND LOCATION : | SCALE : | DRAWING TITLE : | DRAWING NO : |
|---|---|---|---|---|---|---|---|---|
| | Name: R. UENO | Name: T. OKUMURA | Name: M. KIUCHI | | DETAILED DESIGN STUDY OF<br>NORTH JAVA CORRIDOR FLYOVER PROJECT<br>TANGGULANGIN FLYOVER - CONTRACT PACKAGE 3<br>( PETERONGAN -TANGGULANGIN )<br>EAST JAVA PROVINCE | NTS | STANDARD COMBINATION CONCRETE CURB AND GUTTER | TRD-056 |
| | Sign: | Sign: | Sign: | APPROVED BY: Ir. HERRY VAZA M,Eng.Sc<br>NIP. : 110038400 | | | | SHEET NO : 56 / 62 |
| | Date: | Date: | Date: | Sign:<br>Date: | | FULL SIZE A3 | | |

## CONCRETE BLOCK

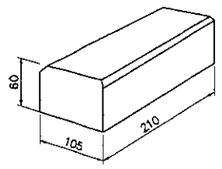


TYPE A

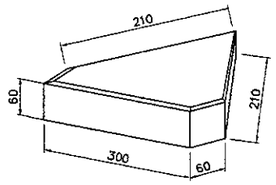


TYPE B

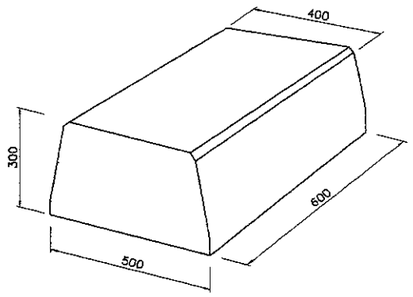


TYPE C

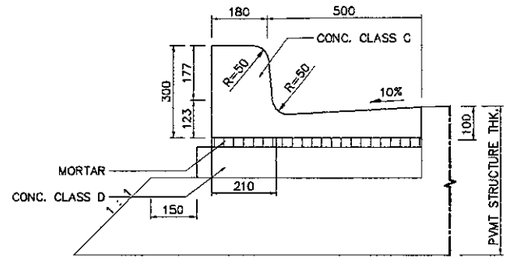


6 - COMBINATION CONCRETE CURB AND GUTTER
NOT TO SCALE

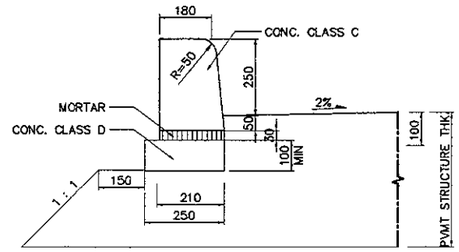


5 - CONCRETE CURB
NOT TO SCALE

## CONCRETE CURB

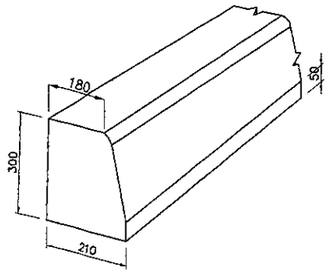


TYPE A

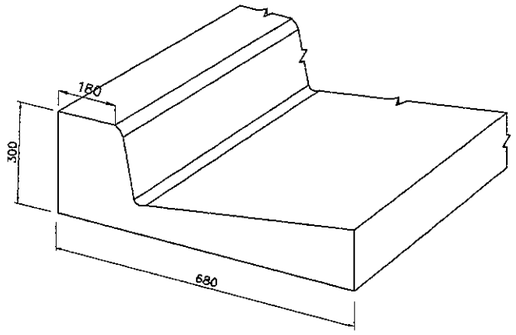


TYPE B

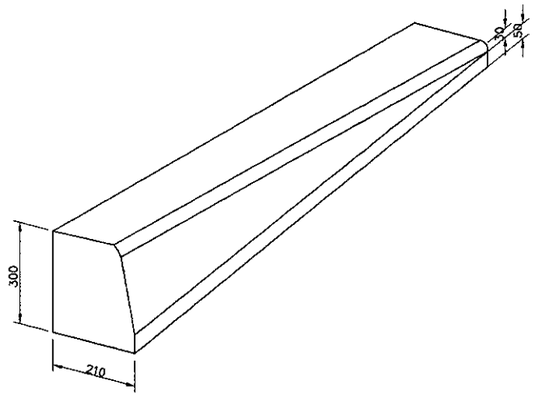


TYPE C

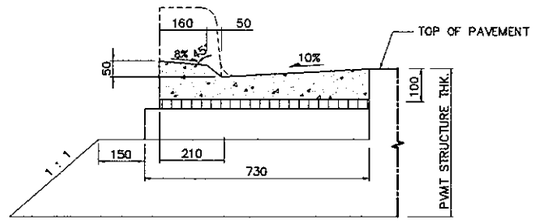


4 - CONCRETE DROP CURB AND GUTTER ( MODIFIED )
NOT TO SCALE

| TYPE | DIMENSION ( MM ) | | | | | | | | REMARK |
|---|---|---|---|---|---|---|---|---|---|
| | a | a1 | b | b1 | h1 | h2 | h3 | h | |
| A | 180 | – | 210 | – | 50 | – | – | 300 | CURB |
| B | 180 | 500 | 210 | – | 75 | 225 | 100 | 300 | GUTTER CURB |

SPECIFICATION :

CONCRETE QUALITY K.300
- SHALL NOT BE PATCHED
- PERFORMED DAMAGED < 5%
- MINIMUM REINFORCED ø 6MM

CONCRETE QUALITY K.150
- COST IN SITE
- NO REINFORCEMENT

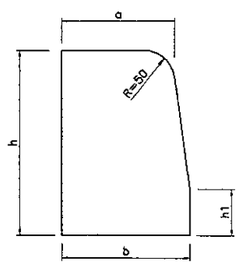


1 - CONCRETE CURB
NOT TO SCALE

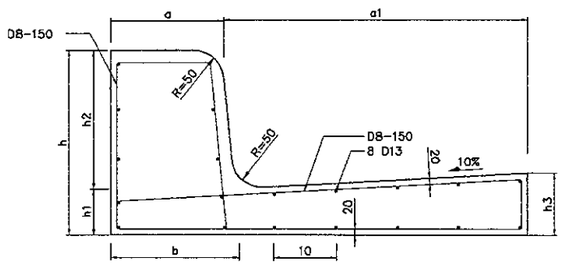


2 - REINFORCEMENT OF COMBINATION CONCRETE CURB AND GUTTER
NOT TO SCALE

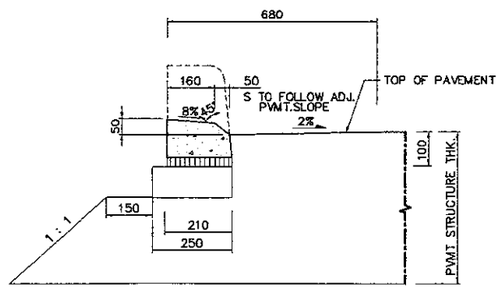


3 - CONCRETE DROP CURB (MEDIAN)
NOT TO SCALE

| JAPAN INTERNATIONAL COOPERATION AGENCY<br>KATAHIRA & ENGINEERS INTERNATIONAL | DESIGNED BY | CHECKED BY | SUBMITTED BY | REPUBLIC OF INDONESIA<br>MINISTRY OF PUBLIC WORKS<br>DIRECTORATE GENERAL OF HIGHWAYS | PROJECT AND LOCATION : | SCALE : | DRAWING TITLE : | DRAWING NO : |
|---|---|---|---|---|---|---|---|---|
| | Name R. UENO | Name T. OKUMURA | Name M. KIUCHI | | DETAILED DESIGN STUDY OF<br>NORTH JAVA CORRIDOR FLYOVER PROJECT<br>TANGGULANGIN FLYOVER - CONTRACT PACKAGE 3<br>( PETERONGAN -TANGGULANGIN )<br>EAST JAVA PROVINCE | AS SHOWN | STANDARD PUBLIC AND PRIVATE ENTRANCE | TRD-057 |
| | Sign | Sign | Sign | APPROVED BY Ir. HERRY VAZA M,Eng.Sc<br>NIP. : 110038400 Sign | | | | SHEET NO : |
| | Date | Date | Date | Date | | FULL SIZE A3 | | 57 / 62 |

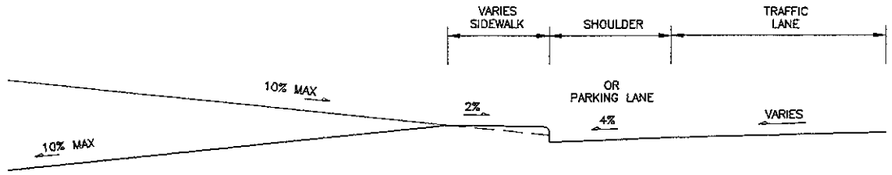


C - PRIVATE ENTRANCE PROFILE
NOT TO SCALE

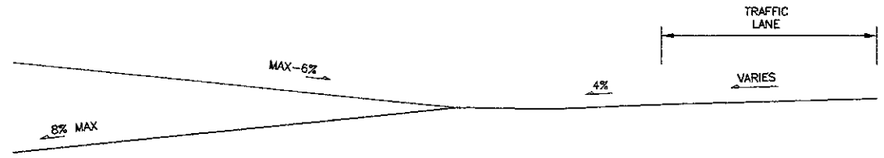


F - PUBLIC ENTRANCE PROFILE
NOT TO SCALE

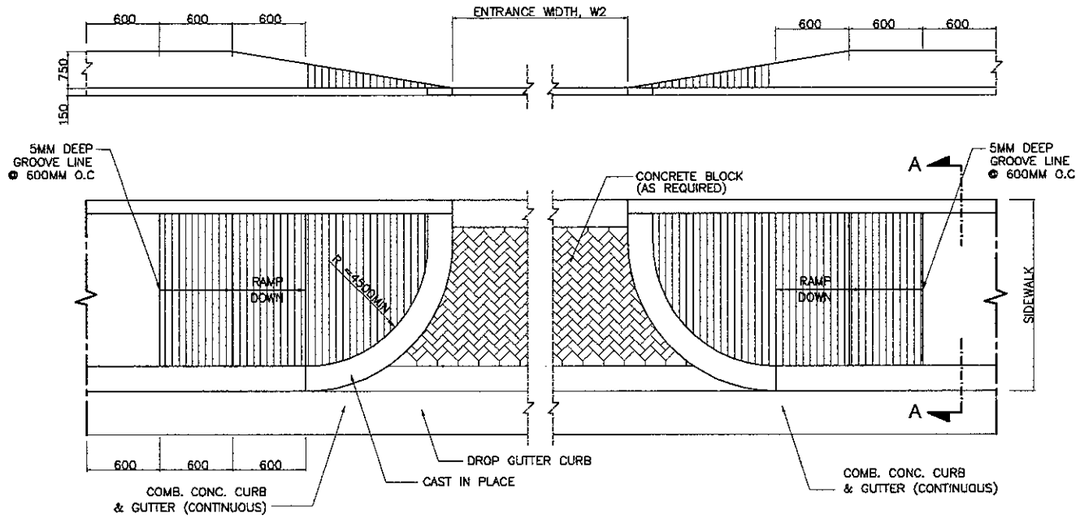


B - PRIVATE DRIVEWAY ENTRANCE - URBAN
SCALE 1 : 50

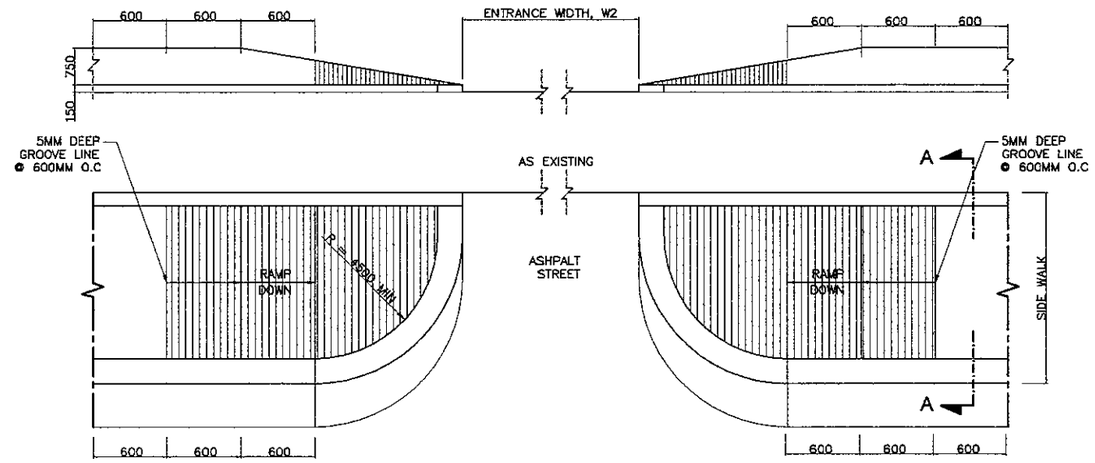


E - PUBLIC STREET / ALLEY ENTRANCE
SCALE 1 : 50

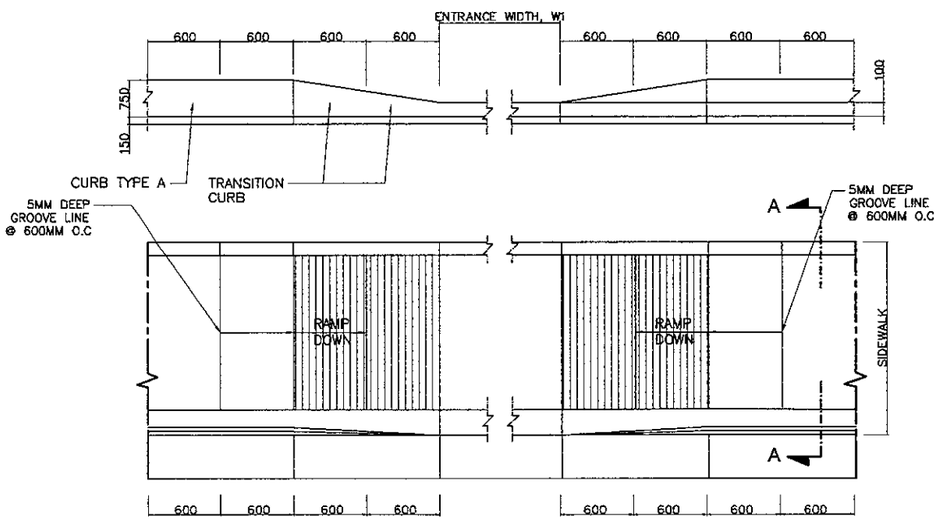


A - PRIVATE ENTRANCE - URBAN
SCALE 1 : 50

| | SINGLE | DOUBLE |
|---|---|---|
| $W_1$ | < 1600 | < 3000 |
| $W_2$ | < 3000 | < 9000 |

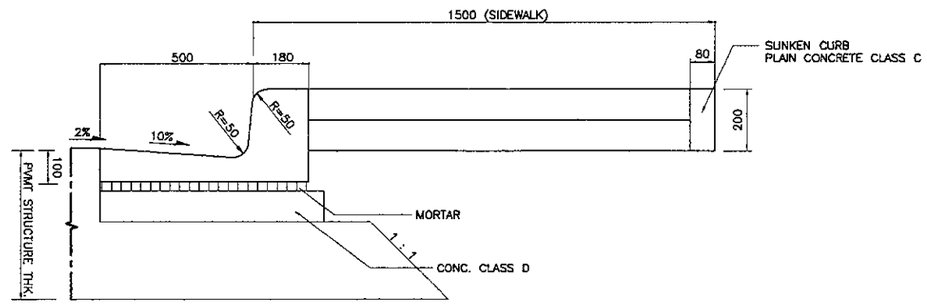


D - SECTION A-A
SCALE 1 : 20

1 - STANDARD PUBLIC AND PRIVATE ACCESS
SCALE 1 : 100

| JICA JAPAN INTERNATIONAL COOPERATION AGENCY / KATAHIRA & ENGINEERS INTERNATIONAL | DESIGNED BY | CHECKED BY | SUBMITTED BY | REPUBLIC OF INDONESIA MINISTRY OF PUBLIC WORKS DIRECTORATE GENERAL OF HIGHWAYS | PROJECT AND LOCATION : | SCALE : | DRAWING TITLE : | DRAWING NO : |
|---|---|---|---|---|---|---|---|---|
| | Name: R. UENO | Name: T. OKUMURA | Name: M. KIUCHI | | DETAILED DESIGN STUDY OF NORTH JAVA CORRIDOR FLYOVER PROJECT TANGGULANGIN FLYOVER - CONTRACT PACKAGE 3 ( PETERONGAN -TANGGULANGIN ) EAST JAVA PROVINCE | AS SHOWN | STANDARD CONCRETE BARRIER AND MEDIAN IN FILL DETAILS | TRD-058 |
| | Sign | Sign | Sign | APPROVED BY: Ir. HERRY VAZA M.Eng.Sc, NIP. : 110038400 | | | | SHEET NO : 58 / 62 |
| | Date | Date | Date | Sign / Date | | FULL SIZE A3 | | |

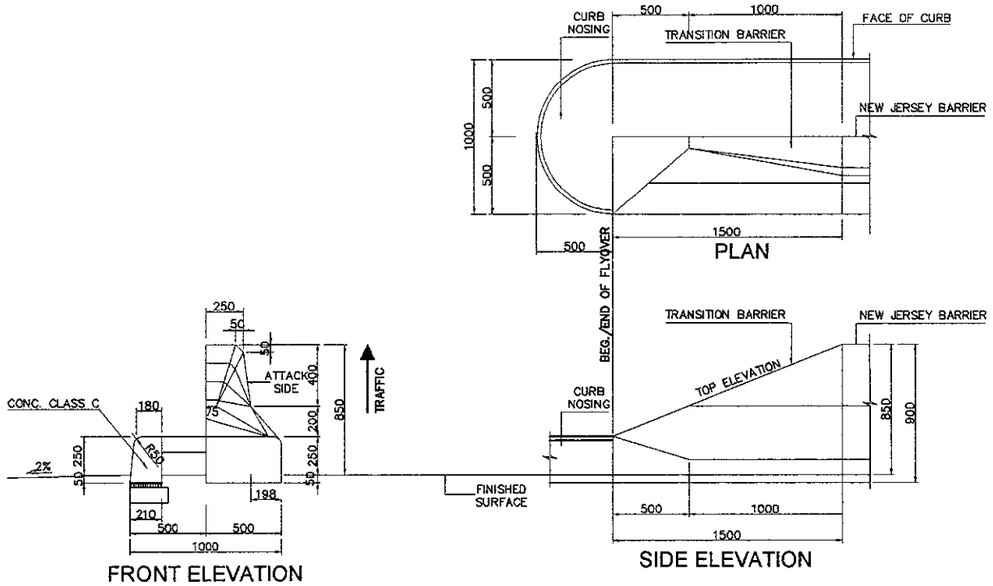


1 - TRANSITION PARAPET
SCALE 1:40

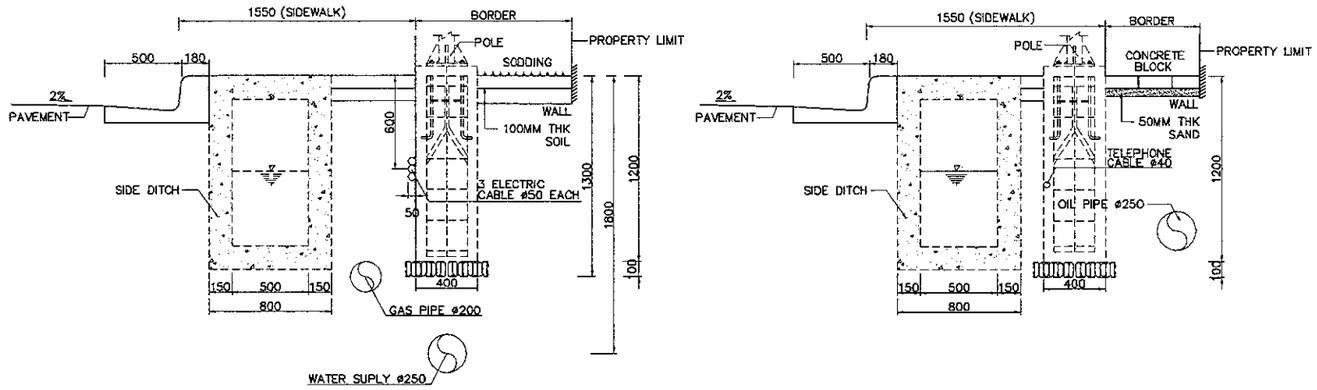


3 - SIDEWALK TO BORDER INFILL DETAILS
SCALE 1:40

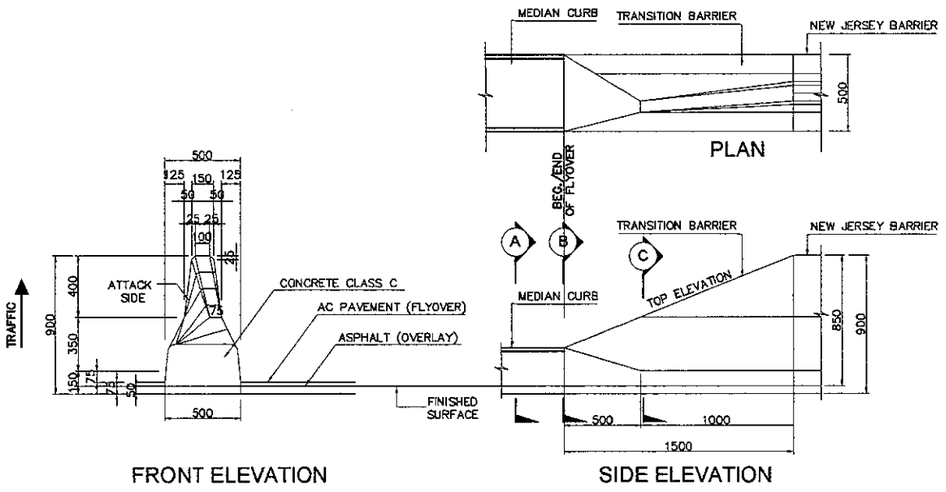


2 - TRANSITION BARRIER
SCALE 1:40

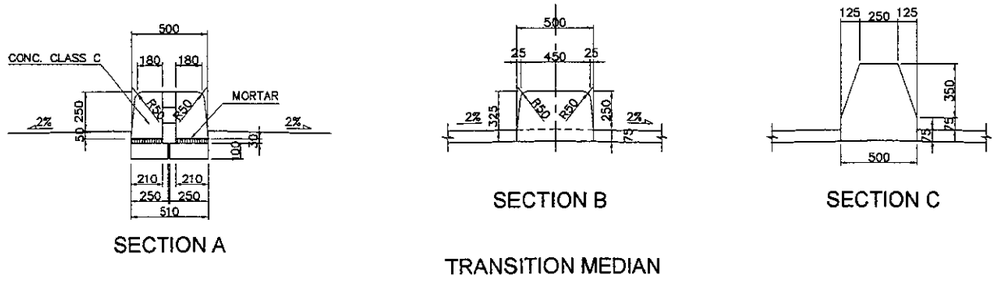


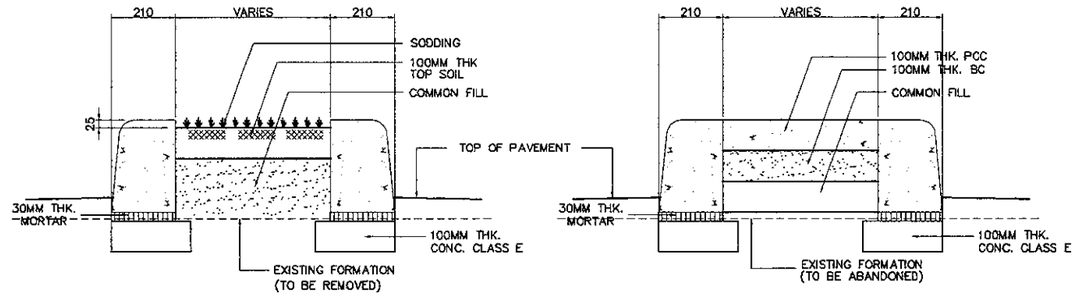


5 - MEDIAN INFILL DETAILS
SCALE 1:20

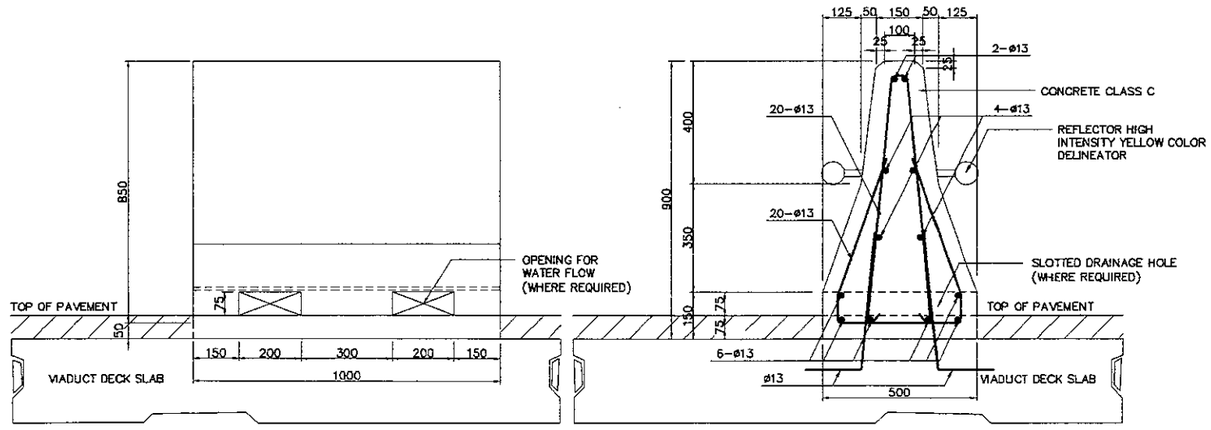


4 - NEW JERSEY BARRIER
SCALE 1:20

| JICA JAPAN INTERNATIONAL COOPERATION AGENCY / KATAHIRA & ENGINEERS INTERNATIONAL | DESIGNED BY | CHECKED BY | SUBMITTED BY | REPUBLIC OF INDONESIA MINISTRY OF PUBLIC WORKS DIRECTORATE GENERAL OF HIGHWAYS | PROJECT AND LOCATION : | SCALE : | DRAWING TITLE : | DRAWING NO : |
|---|---|---|---|---|---|---|---|---|
| | Name: R. UENO | Name: T. OKUMURA | Name: M. KIUCHI | | DETAILED DESIGN STUDY OF NORTH JAVA CORRIDOR FLYOVER PROJECT TANGGULANGIN FLYOVER - CONTRACT PACKAGE 3 ( PETERONGAN -TANGGULANGIN ) EAST JAVA PROVINCE | AS SHOWN | STANDARD BRC FENCE AND STONE MASONRY RETAINING WALL | TRD-059 |
| | Sign | Sign | Sign | APPROVED BY: Ir. HERRY VAZA M,Eng.Sc NIP. : 110038400 Sign | | | | SHEET NO : 59 / 62 |
| | Date | Date | Date | Date | | FULL SIZE A3 | | |

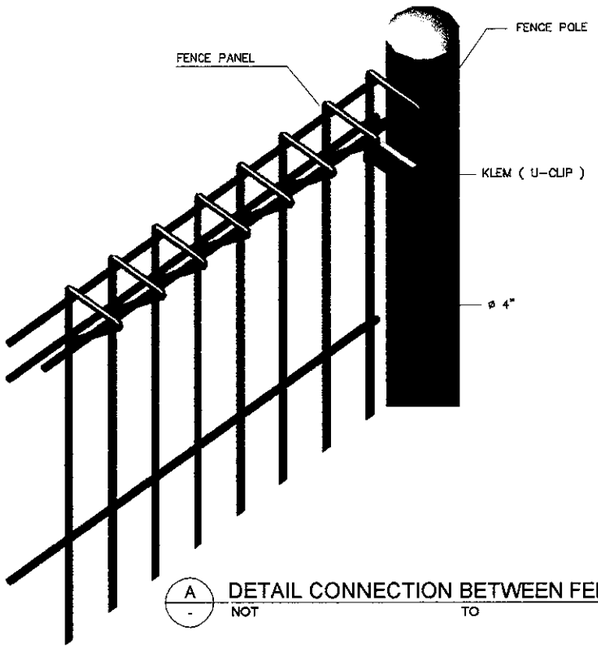


A - DETAIL CONNECTION BETWEEN FENCE AND POLE
NOT TO SCALE

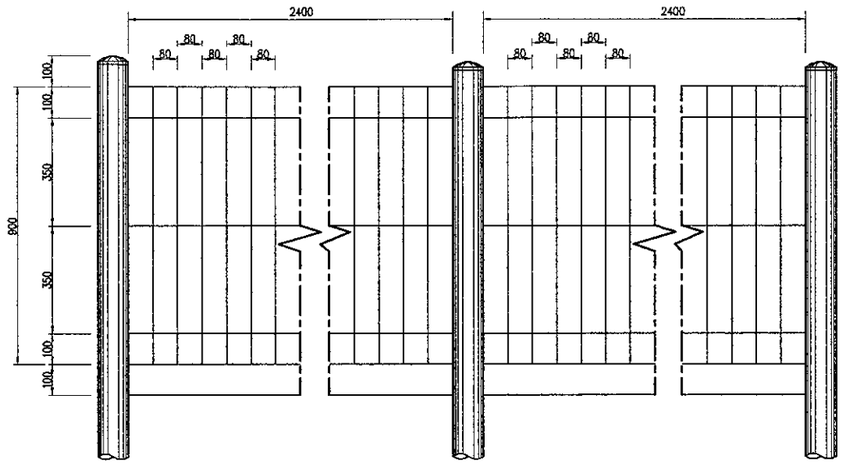


B - BRC FENCE
SCALE 1 : 20

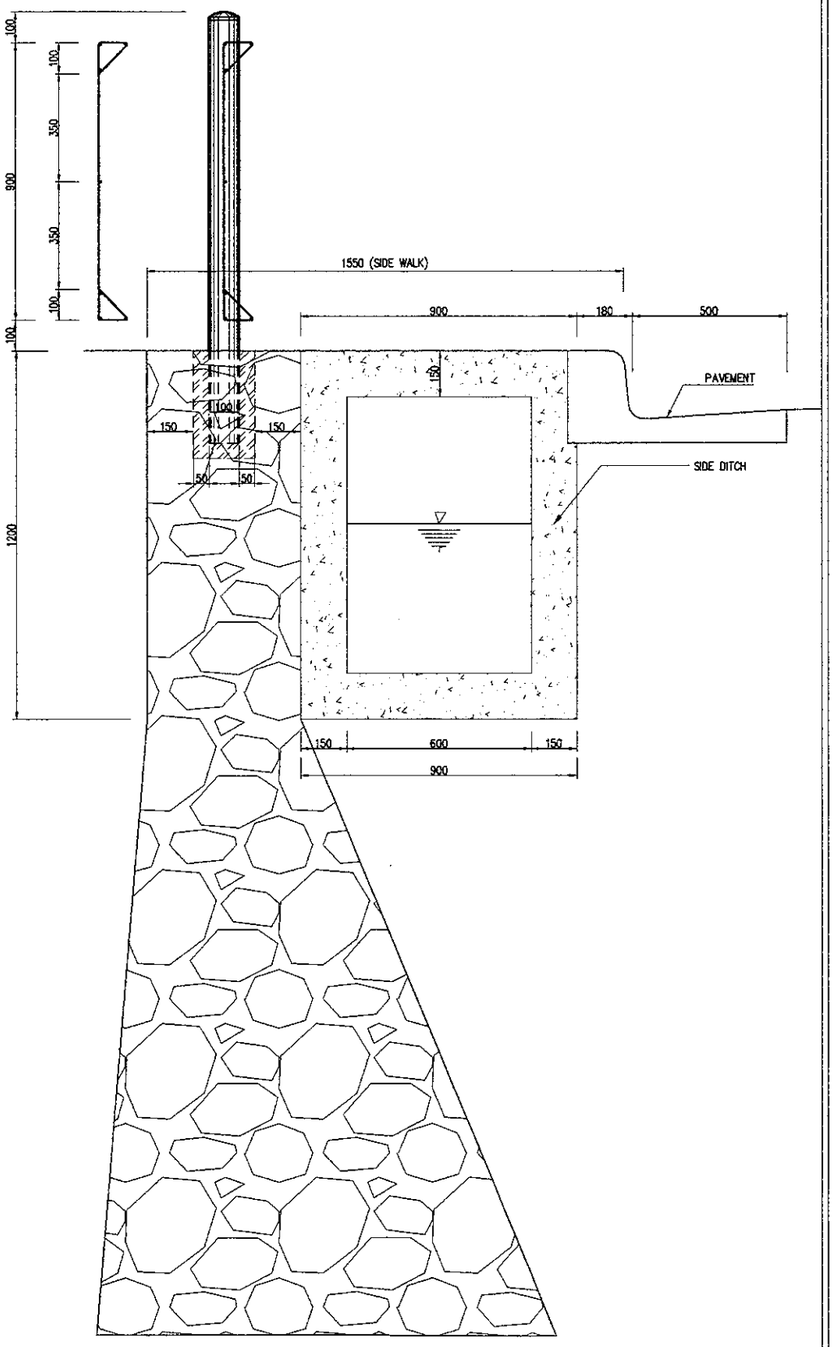


E - DETAIL OF BRC FENCE FOUNDATION ON STONE MASONRY
SCALE 1 : 20

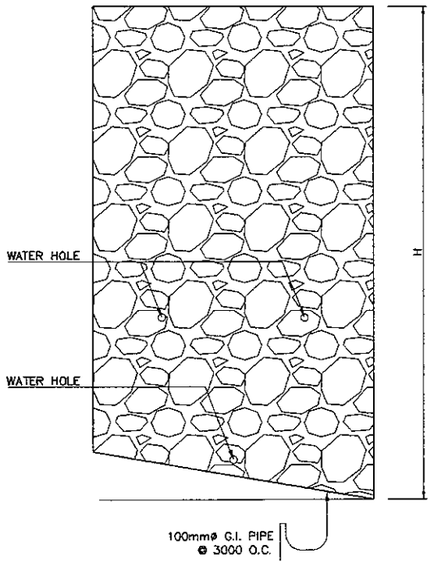


ELEVATION

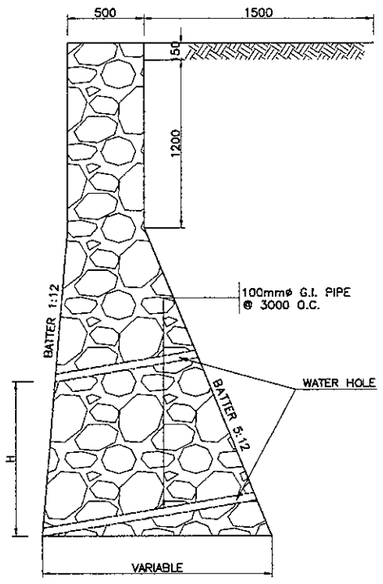


SECTION

C - STONE MASONRY RETAINING WALL
SCALE 1 : 40

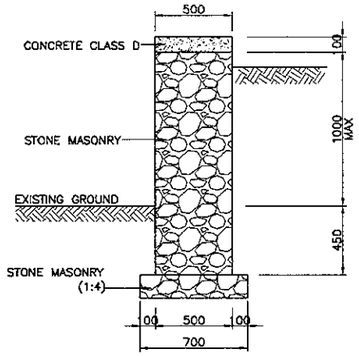


D - DWARF STONE WALL (DSW) FOR CUT AND FILL
SCALE 1 : 40

TABLE

| HEIGHT IN METERS | QUANTITIES PER LINEAR M OF WALL IN CU. METER |
|---|---|
| 0.90 | 0.15 |
| 1.20 | 0.23 |
| 1.50 | 0.31 |
| 1.90 | 0.38 |
| 2.10 | 0.46 |
| 2.40 | 0.54 |
| 2.70 | 0.69 |
| 3.00 | 0.77 |
| 3.30 | 0.92 |

TABLE

| HEIGHT IN METERS | QUANTITIES PER LINEAR M OF WALL IN CU. METER |
|---|---|
| 3.60 | 1.15 |
| 3.90 | 1.30 |
| 4.20 | 1.45 |
| 4.50 | 1.68 |
| 4.80 | 1.91 |
| 5.10 | 2.14 |
| 5.40 | 2.37 |
| 5.60 | 2.68 |
| 6.00 | 2.91 |

MIN. BULDGE 2.50 CMS., MAX. BULDGE 10 CMS.
FEATHERED TO WORKING LINE AT JOINTS TO
BE RAKED TO A DEPTH OF 2.50 TO 5 CMS.

| JAPAN INTERNATIONAL COOPERATION AGENCY<br>KATAHIRA & ENGINEERS INTERNATIONAL | DESIGNED BY | CHECKED BY | SUBMITTED BY | REPUBLIC OF INDONESIA<br>MINISTRY OF PUBLIC WORKS<br>DIRECTORATE GENERAL OF HIGHWAYS | PROJECT AND LOCATION : | SCALE : | DRAWING TITLE : | DRAWING NO : |
|---|---|---|---|---|---|---|---|---|
| | Name R. UENO | Name T. OKUMURA | Name M. KIUCHI | | DETAILED DESIGN STUDY OF<br>NORTH JAVA CORRIDOR FLYOVER PROJECT<br>TANGGULANGIN FLYOVER - CONTRACT PACKAGE 3<br>( PETERONGAN -TANGGULANGIN )<br>EAST JAVA PROVINCE | 1 : 20 | STANDARD CURB - CUT<br>RAMP DETAILS | TRD-060 |
| | Sign | Sign | Sign | APPROVED BY Ir. HERRY VAZA M,Eng.Sc Sign | | | | SHEET NO : |
| | Date | Date | Date | NIP. : 110038400 Date | | FULL SIZE A3 | | 60 / 62 |

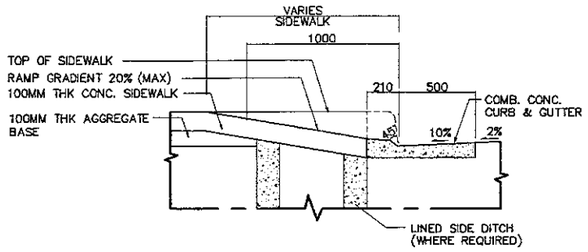


3 - SECTION 1-1
SCALE 1 : 20

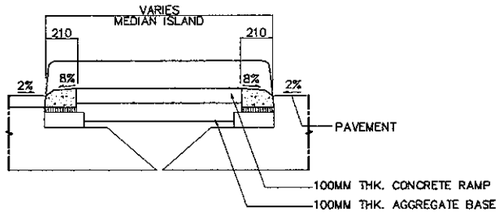


6 - SECTION 2-2
SCALE 1 : 20

SIDE WALK

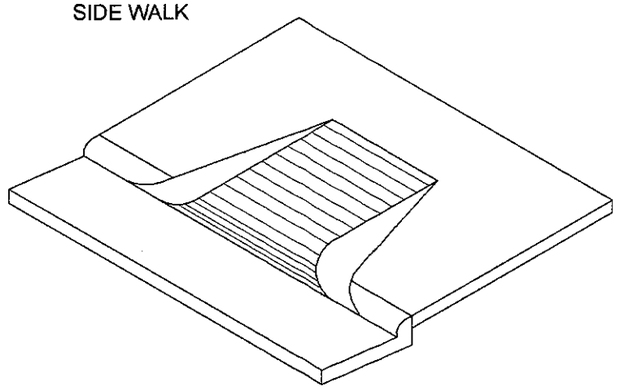

8 - ISOMETRIC
NOT TO SCALE

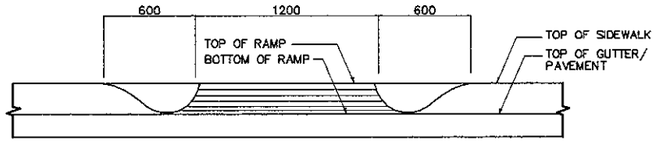


2 - ELEVATION
SCALE 1 : 20

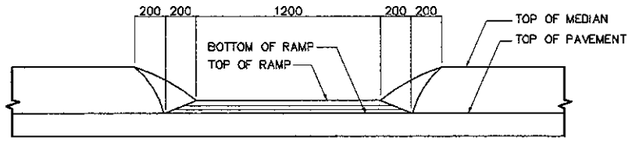


5 - ELEVATION
SCALE 1 : 20

MEDIAN

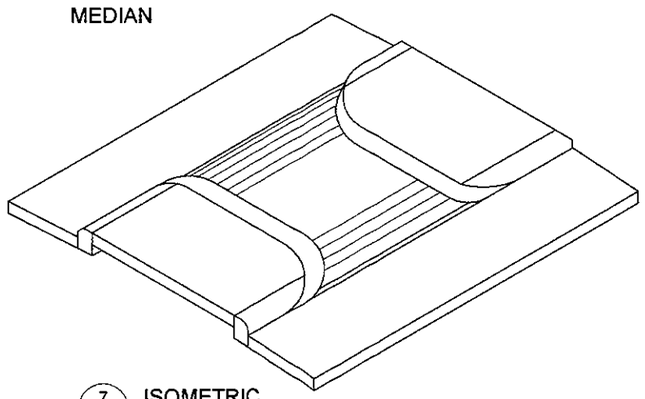

7 - ISOMETRIC
NOT TO SCALE

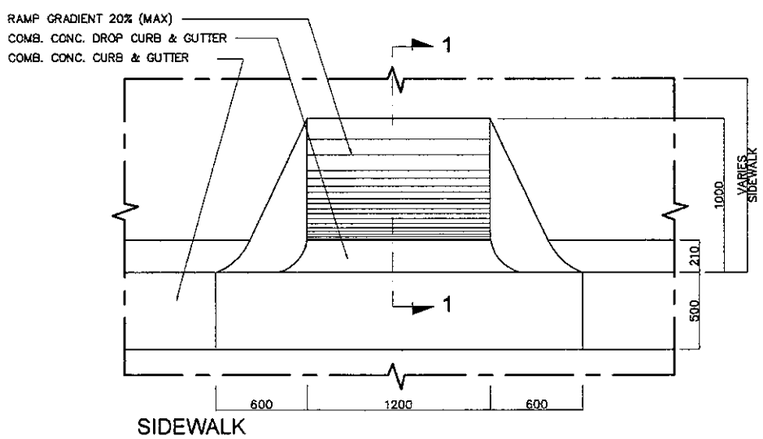


1 - PLAN
SCALE 1 : 20

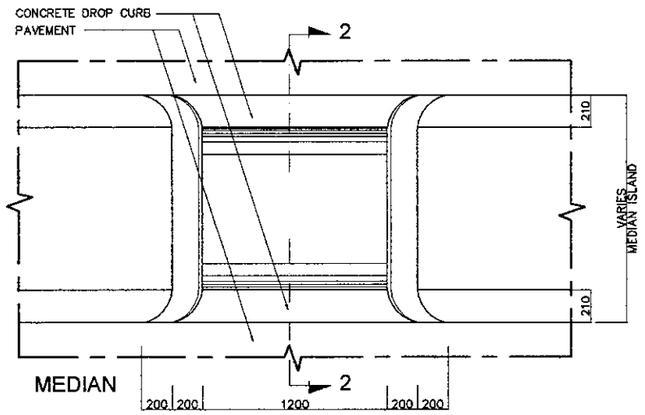


4 - PLAN
SCALE 1 : 20

A - STANDARD CURB-CUT RAMP (FOR PHYSICALLY HANDICAPPED)

| JAPAN INTERNATIONAL COOPERATION AGENCY<br>KATAHIRA & ENGINEERS INTERNATIONAL | DESIGNED BY | | CHECKED BY | | SUBMITTED BY | | REPUBLIC OF INDONESIA<br>MINISTRY OF PUBLIC WORKS<br>DIRECTORATE GENERAL OF HIGHWAYS | PROJECT AND LOCATION : | SCALE : | DRAWING TITLE : | DRAWING NO : |
|---|---|---|---|---|---|---|---|---|---|---|---|
| | Name | R. UENO | Name | T. OKUMURA | Name | M. KIUCHI | | DETAILED DESIGN STUDY OF<br>NORTH JAVA CORRIDOR FLYOVER PROJECT<br>TANGGULANGIN FLYOVER - CONTRACT PACKAGE 3<br>( PETERONGAN -TANGGULANGIN )<br>EAST JAVA PROVINCE | AS SHOWN | STANDARD COLUMN PROTECTION DETAILS | TRD-061 |
| | Sign | | Sign | | Sign | | APPROVED BY: Ir. HERRY VAZA M,Eng.Sc<br>NIP. : 110038400 | | | | SHEET NO : |
| | Date | | Date | | Date | | Sign / Date | | FULL SIZE A3 | | 61 / 62 |

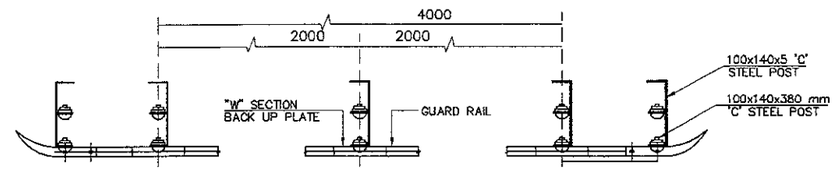


A - PLAN
NOT TO SCALE

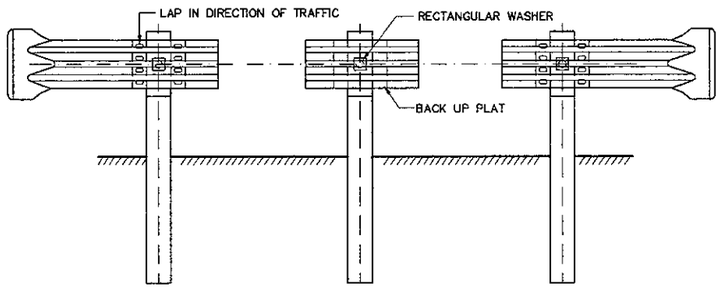


B - FRONT ELEVATION
NOT TO SCALE

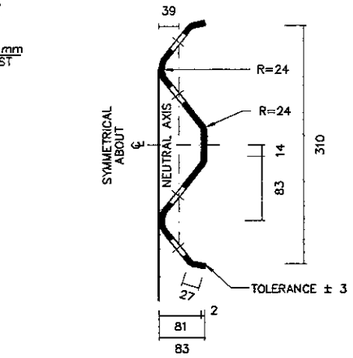


F - ENLARGED SECTION A-A
(SECTION B-B, SIMILAR)
NOT TO SCALE

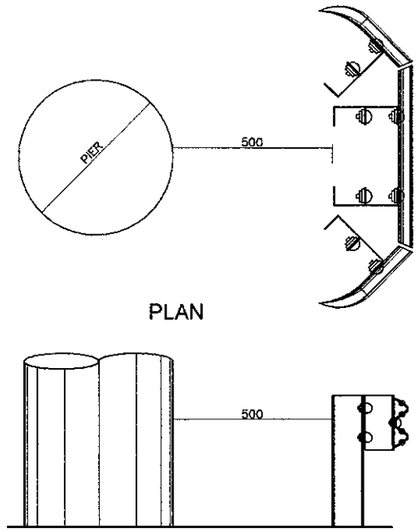


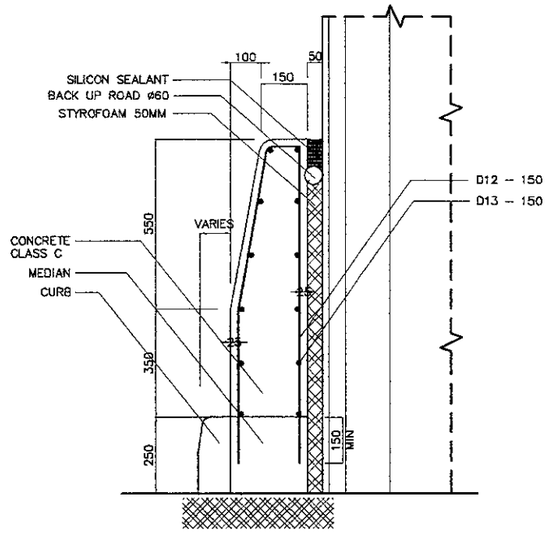


A - DETAIL 1
SCALE 1:20

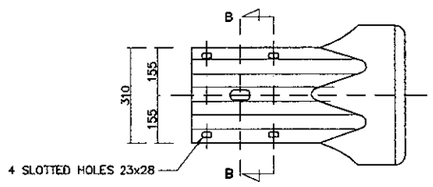


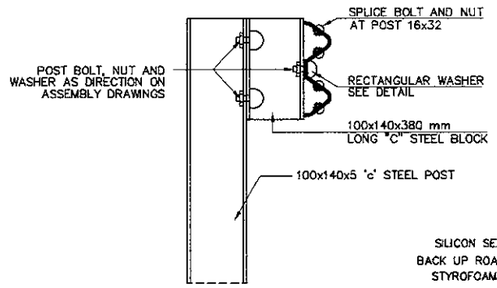


D - RAIL WASHER
NOT TO SCALE

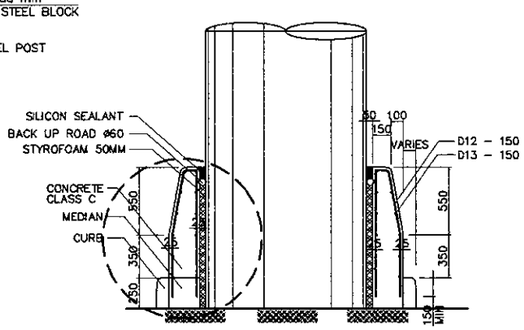


SECTION

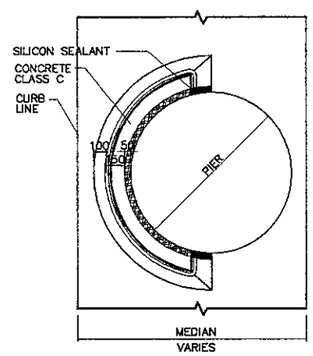


PLAN

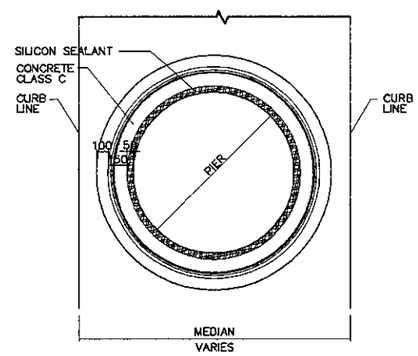


PLAN

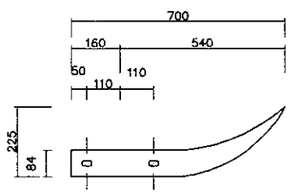


| POST BOLTS AND HOLES | | |
|---|---|---|
| HOLE DIA. (mm) | POST BOLTS AND NUTS (mm) | WASHER |
| 18 | 16x45 | RECT / PLATE |

E - DOWN STREAM END TREATMENT
NOT TO SCALE

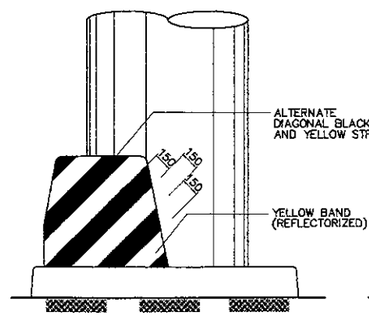


ELEVATION

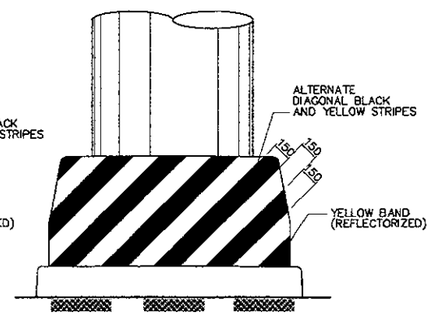


ELEVATION

1 - STEEL BEAM GUARD RAIL & RAIL DETAILS TYPE 2
NOT TO SCALE

2 - CONCRETE COLUMN PROTECTION TYPE 1
SCALE 1:50

| JAPAN INTERNATIONAL COOPERATION AGENCY<br>KATAHIRA & ENGINEERS INTERNATIONAL | DESIGNED BY | CHECKED BY | SUBMITTED BY | REPUBLIC OF INDONESIA<br>MINISTRY OF PUBLIC WORKS<br>DIRECTORATE GENERAL OF HIGHWAYS | PROJECT AND LOCATION : | SCALE : | DRAWING TITLE : | DRAWING NO : |
|---|---|---|---|---|---|---|---|---|
| | Name: R. UENO | Name: T. OKUMURA | Name: M. KIUCHI | | DETAILED DESIGN STUDY OF<br>NORTH JAVA CORRIDOR FLYOVER PROJECT<br>TANGGULANGIN FLYOVER - CONTRACT PACKAGE 3<br>( PETERONGAN -TANGGULANGIN )<br>EAST JAVA PROVINCE | 1 : 500 | RAILWAY CROSSING DETAILS | TRD-062 |
| | Sign | Sign | Sign | APPROVED BY: Ir. HERRY VAZA M,Eng.Sc<br>NIP. : 110038400 | | | | SHEET NO : |
| | Date | Date | Date | Sign / Date | | FULL SIZE A3 | | 62 / 62 |

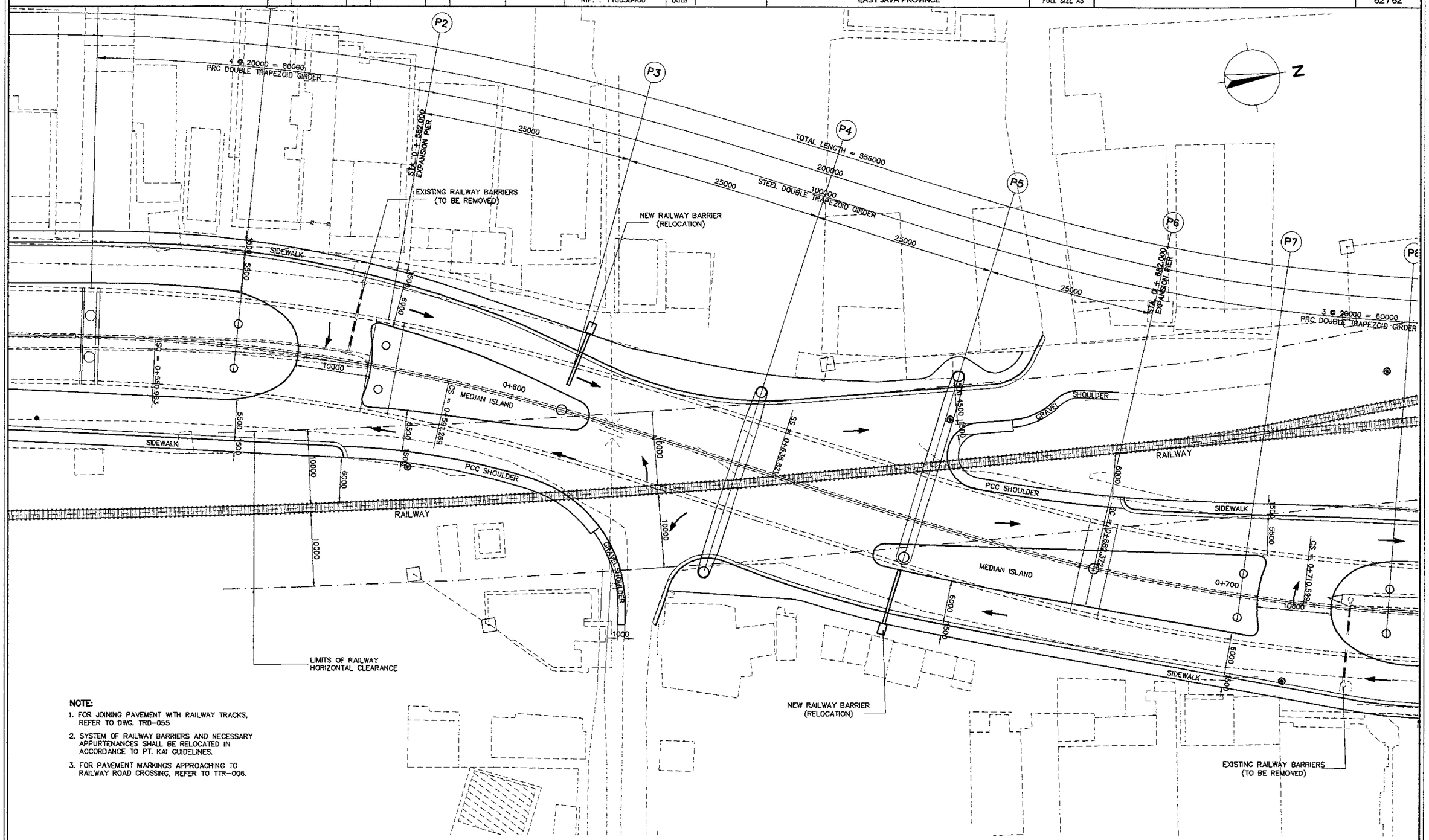


**NOTE:**

1. FOR JOINING PAVEMENT WITH RAILWAY TRACKS, REFER TO DWG. TRD-055
2. SYSTEM OF RAILWAY BARRIERS AND NECESSARY APPURTENANCES SHALL BE RELOCATED IN ACCORDANCE TO PT. KAI GUIDELINES.
3. FOR PAVEMENT MARKINGS APPROACHING TO RAILWAY ROAD CROSSING, REFER TO TTR-006.

**LEGEND :**

: EXISTING RAILWAY BARRIER

: RELOCATION RAILWAY BARRIER

1 / - RAILWAY CROSSING DETAILS
SCALE 1:500