JAPAN INTERNATIONAL
COOPERATION AGENCY

DIRECTORATE GENERAL OF HIGHWAY
MINISTRY OF PUBLIC WORKS
REPUBLIC OF INDONESIA

E. P. S. EMBANKMENT

KATAHIRA & ENGINEERS INTERNATIONAL

JICA JAPAN INTERNATIONAL COOPERATION AGENCY / KEI KATAHIRA & ENGINEERS INTERNATIONAL	DESIGNED BY	CHECKED BY	SUBMITTED BY	REPUBLIC OF INDONESIA MINISTRY OF PUBLIC WORKS DIRECTORATE GENERAL OF HIGHWAYS	PROJECT AND LOCATION :	SCALE :	DRAWING TITLE :	DRAWING NO :
	Name: T. OKUMURA	Name: T. OKUMURA	Name: M. KIUCHI		DETAILED DESIGN STUDY OF NORTH JAVA CORRIDOR FLYOVER PROJECT GEBANG FLYOVER - CONTRACT PACKAGE 2 (NAGREG - GEBANG) WEST JAVA PROVINCE	NTS	NOTES FOR EPS EMBANKMENT	GEP-001
	Sign	Sign	Sign	APPROVED BY: Ir. HERRY VAZA M,Eng.Sc NIP. : 110038400 Sign				SHEET NO :
	Date	Date	Date	Date		FULL SIZE A3		1 / 11

NOTES FOR EPS EMBANKMENT

NOTES :

1. EPS EMBANKMENT SHOWN IN THIS SET OF DRAWINGS SHALL COMPLY WITH THE REQUIREMENTS OF "STANDARD SPECIFICATIONS FOR HIGHWAY BRIDGES, DIVISION I AND II."

   THE CONTRACTOR MAY PROPOSE WALL TYPES OTHER THAN THAT SHOWN IN THE DRAWINGS AND APPROVED BY THE ENGINEER.

   DESIGN LIFE = 75 YEARS

2. MATERIALS

2.1 **EPS**
ALL EPS BLOCK GEOFOAM SHALL SATISFY THE PRODUCT FLAMMABILITY REQUIREMENTS SPECIFIED IN ASTM C 578.

EACH EPS BLOCK SHALL MEET DIMENSIONAL TOLERANCES, THE THICKNESS, WIDTH AND LENGTH. DIMENSIONS OF AN EPS BLOCK ARE DEFINED FROM MANUFACTURERS SPECIFICATIONS & SHOULD NOT DEVIATE FROM THE THEORETICAL DIMENSIONS BY MORE THAN 0.5 PERCENT.

2.2 **PRECAST CONCRETE PANELS**
28 DAYS COMPRESSIVE STRENGTH OF CONCRETE = 30 MPa

THE EXTERIOR FACE OF THE PANELS MUST BE UNIFORM AND MUST NOT SHOW SIGNIFICANT VARIATION FROM ONE PANEL TO ANOTHER. PANEL SHOULD CONFORM TO THE DIMENSIONS SHOWN AND BE FREE OF HONEYCOMBS, STRAIN OR DEEP CRACK IN THE FACE.

2.3 **STEEL ANCHORAGE BARS**
STEEL BARS SHALL BE HOT DIPPED GALVANIZED IN ACCORDANCE WITH AASHTO REQUIREMENTS.

2.4 **JOINT FILLER**
FILLER FOR VERTICAL JOINTS SHALL BE FLEXIBLE OPEN CELL POLYURETHANE FOAM STRIPS OF 40mm SQURE CROSS SECTION OR EQUIVALENT. THE VERTICAL JOINT FILLER SHALL BE ENCLOSED WITH GEOTEXTILE MEMBRANE AS SHOWN IN THE DRAWINGS. HORIZONTAL JOINT FILLER SHALL BE RESIN BONDED CORK FILLER BOARD CONFORMING TO ASTM D 1752 AND RUBBER PAD WITH SHORE HARDNESS OF 85 +0 −5.

2.5 **CONCRETE LEVELING PAD**
CONCRETE LEVELING PAD SHALL HAVE A 28TH DAY COMPRESSIVE STRENGTH OF 21MPa.

2.6 **REINFORCED CONCRETE SLABS**
REFERRED TO AS " LOAD DISTRIBUTUION SLAB " SHALL BE PROVIDED ACROSS THE TOP OF THE EPS BLOCKS IN LAYERS AS SHOWN IN THE DRAWINGS.

STRUCTURAL CONNECTION POINT FOR SIDE-COVER SYSTEM SHALL BE INTEGRATED WITH THE REINFORCED CONCRETE SLABS. IF IT IS NECESSARY, THE TOP LAYER OF LOAD DISTRIBUTION SLAB CAN BE USED AS ANCHORAGE FOR SAFETY BARRIERS, SIGNAGE AND LIGHTING.

3. ALLOWABLE SOIL BEARING CAPACITY

THE CONTRACTOR SHALL VERIFY THAT THE ALLOWABLE SOIL BEARING CAPACITY AT FOUNDATION LEVEL SHALL BE SUFFICIENT FOR EPS.

4. FOUNDATION TREATMENT

THE CONTRACTOR SHALL PREPARE THE FOUNDATION FOR EPS LIGHTWEIGHT EMBANKMENT IN ACCORDANCE WITH THE PLANS AND SHALL VERIFY IF THE EXISTING FOUNDATION IS SUITABLE TO SUPPORT THE EPS IN THE AREAS WHERE EXCAVATION OF FOUNDATION MATERIALS IS NECESSARY.THE CONTRACTOR SHALL PERFORM SUCH EXCAVATION TO THE LIMITS SHOWN IN THE DRAWINGS. THE EXCAVATED MATERIALS SHALL BE REPLACED WITH STRUCTURE BACKFILL MATERIAL MEETING THE REQUIREMENTS OF THE EARTH RETAINING SYTEM.

5. CONSTRUCTION

5.1 THE EPS LIGHTWEIGHT EMBANKMENT SHALL BE CONSTRUCTED IN ACCORDANCE WITH ASTM REQUIREMENTS OR RECOMMENDED BY THE MANUFACTURER / SUPPLIER.

THE CONTRACTOR SHALL SUBMIT FOR THE APPROVAL OF THE ENGINEER, WORKING PLAN AND DRAWINGS OF CONSTRUCTION METHOD, SEQUENCE, SAFETY AND QUALITY ASSURANCE.

5.2 BEFORE INSTALLATION BEGINS, THE EXISTING GROUND SHALL BE CLEARED PRIOR TO PLACING OF SAND BEDDING LAYER WHERE NECESSARY, EPS BLOCKS SHALL BE PLACED SO THAT ALL VERTICAL AND HORIZONTAL JOINTS BETWEEN BLOCKS ARE TIGHT. SUCCESSIVE LAYERS OF EPS BLOCKS MUST BE ORIENTED PERPEDICULAR TO THE PREVIOUS LAYER WITH VERTICAL JOINTS OFFSET COMPLETELY INTACT.

6. PLACEMENT OF EPS BLOCK GEOFOAM

6.1 EPS BLOCKS SHALL BE PLACED AT THE LOCATIONS SHOWN ON EITHER THE CONTRACT DRAWINGS OR APPROVED SHOP DRAWINGS SUBMITTED BY THE CONTRACTOR. PARTICULAR CARE IS REQUIRED IF EPS BLOCKS OF DIFFERENT DENSITY/UNIT WEIGHT ARE TO BE USED ON THE PROJECT.

6.2 EPS BLOCKS SHALL BE PLACED SO THAT ALL VERTICAL AND HORIZONTAL JOINTS BETWEEN BLOCKS ARE TIGHT.

6.3 THE SURFACES OF THE EPS BLOCKS SHALL NOT BE DIRECTLY TRAVERSED BY ANY VEHICLE OR CONSTRUCTIONEQUIPMENT DURING OR AFTER PLACEMENT OF THE BLOCKS.

6.4 WITH THE EXCEPTION OF SAND BAGS OR SIMILAR "SOFT" WEIGHTS USED TO TEMPORARILY RESTRAIN EPS BLOCKS AGAINST WIND, NO CONSTRUCTION MATERIAL OTHER THAN THAT SHOWN ON THE DRAWINGS SHALL BE PLACED OR STOCKPILED ON THE EPS BLOCKS.

6.5 AT NO TIME SHALL HEAT OR OPEN FLAME BE USED NEAR THE EPS BLOCKS SO AS TO CAUSE MELTING OR COMBUSTION OF THE EPS.

6.6 THE FINAL SURFACE OF THE EPS BLOCKS SHALL BE COVERED AS SHOWN ON THE CONTRACT DRAWINGS. CARE SHALL BE EXERCISED DURING PLACEMENT OF THE COVER MATERIAL SO AS NOT TO CAUSE ANY DAMAGE TO THE EPS BLOCKS.

7. PAVEMENT CONSTRUCTION

7.1 THE PAVEMENT SYSTEM IS DEFINED FOR THE PURPOSES OF THIS STANDARD AS ALL MATERIAL PLACED ON THE EPS BLOCKS WITHIN THE LIMITS OF THE ROADWAY, INCLUDING ANY SHOULDERS.

7.2 THE PAVEMENT SYSTEM SHALL BE CONSTRUCTED ABOVE THE EPS BLOCK GEOFOAM AS SHOWN ON THE CONTRACT DRAWINGS. SPECIFICATIONS COVERING CONSTRUCTION OF THE PAVEMENT SYSTEM ARE GIVEN ELSEWHERE IN THE CONTRACT DOCUMENTS.

7.3 NO VEHICLES OR CONSTRUCTION EQUIPMENT SHALL TRAVERSE DIRECTLY ON THE EPS BLOCKS OR ON ANY SEPARATION MATERIAL PLACED BETWEEN THE EPS BLOCKS AND THE PAVEMENT SYSTEM. SOIL OR AGGREGATE FOR THE PAVEMENT SYSTEM LAYERS SHALL BE PUSHED ONTO THE EPS BLOCKS OR SEPARATION LAYER USING APPROPRIATE EQUIPMENT SUCH AS A BULLDOZER OR A FRONT-END LOADER. A MINIMUM OF 300 MM (12 IN.) OF SOIL OR AGGREGATE SHALL COVER THE TOP OF THE EPS BLOCKS OR SEPARATION LAYER BEFORE COMPACTION COMMENCES.

8. STORAGE

THE EPS BLOCKS SHALL BE BALLASTED AND/OR SECURED DURING STORAGE AND PLACEMENT. THE BLOCK SHALL BE COVERED WITH A LIGHT-COLORED TARP IF STORED OUTDOORS LONGER THAN TWO WEEKS. EPS SHALL NOT BE EXPOSED TO HYDROCARBONS OR PETROLEUM BASED SOLVENTS SUCH AS GASOLINE, DIESEL FUEL, CONCRETE CURING COMPOUND, COAL TAR PITCH AND ASPHALT/MASTIC COMPOUNDS. EPS IS COMBUSTIBLE AND SHALL NOT BE EXPOSED TO FLAME OR OTHER IGNITION SOURCED.

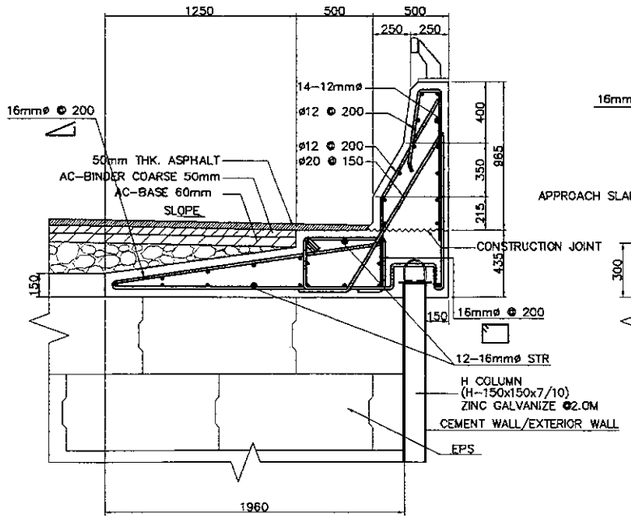

STANDARD DETAIL OF CONCRETE RAILING AT EPS EMBANKMENT

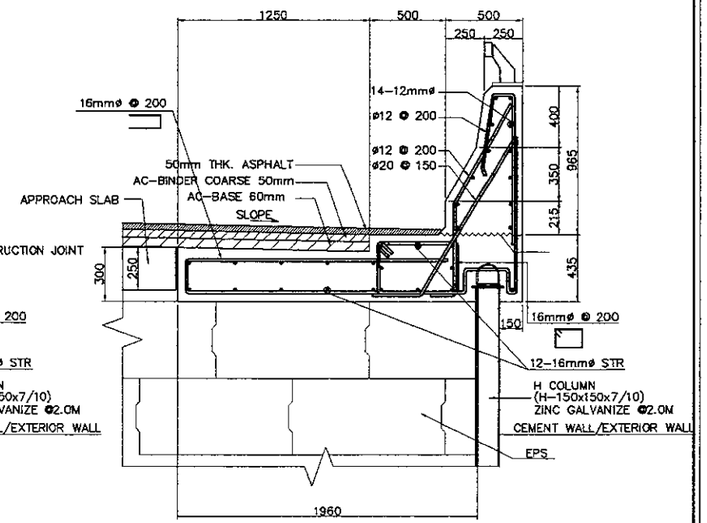

STANDARD DETAIL OF CONCRETE RAILING AT APPROACH SLAB

JAPAN INTERNATIONAL COOPERATION AGENCY KATAHIRA & ENGINEERS INTERNATIONAL	DESIGNED BY	CHECKED BY	SUBMITTED BY	REPUBLIC OF INDONESIA MINISTRY OF PUBLIC WORKS DIRECTORATE GENERAL OF HIGHWAYS	PROJECT AND LOCATION :	SCALE :	DRAWING TITLE :	DRAWING NO :
	Name: T. OKUMURA	Name: T. OKUMURA	Name: M. KIUCHI		DETAILED DESIGN STUDY OF NORTH JAVA CORRIDOR FLYOVER PROJECT GEBANG FLYOVER - CONTRACT PACKAGE 2 (NAGREG - GEBANG) WEST JAVA PROVINCE	1 : 200	PLAN & ELEVATION OF EPS EMBANKMENT (ABUTMENT A1) 1 OF 2	GEP-002
	Sign	Sign	Sign	APPROVED BY: Ir. HERRY VAZA M,Eng.Sc NIP. : 110038400				SHEET NO :
	Date	Date	Date	Sign / Date		FULL SIZE A3		02 / 11

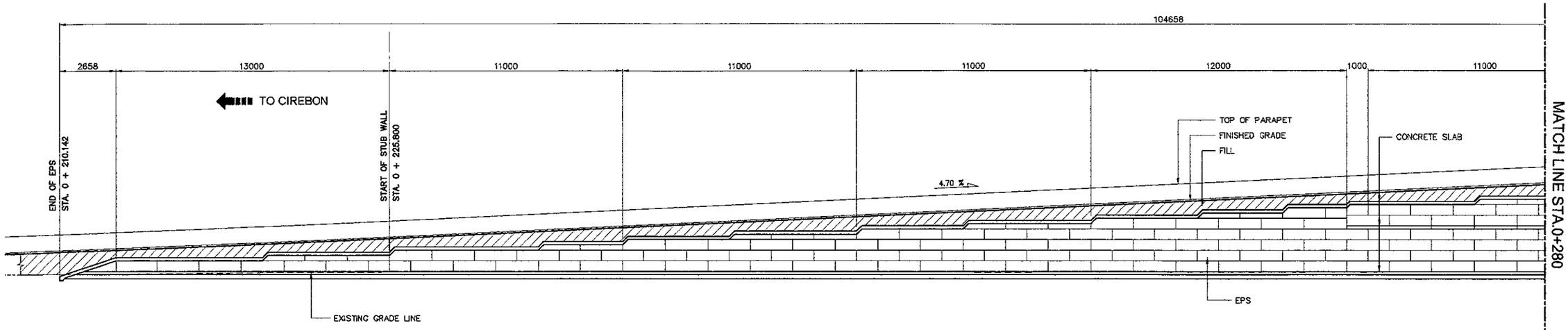

A - ELEVATION
SCALE 1:200

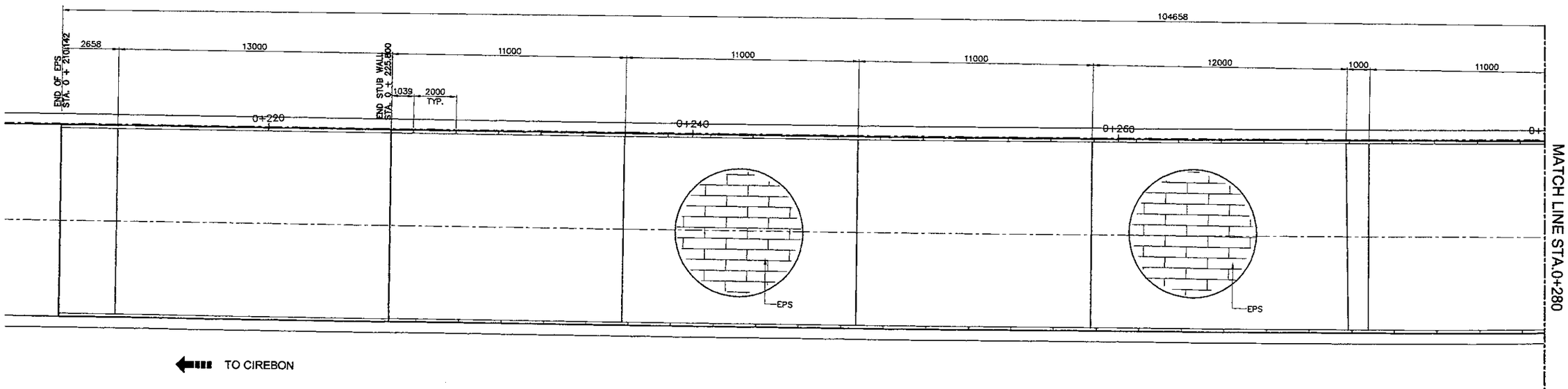

B - PLAN
SCALE 1:200

1 - PLAN & ELEV. OF EPS EMBANKMENT (ABUT. A1)
SCALE 1:200

JAPAN INTERNATIONAL COOPERATION AGENCY KATAHIRA & ENGINEERS INTERNATIONAL	DESIGNED BY	CHECKED BY	SUBMITTED BY	REPUBLIC OF INDONESIA MINISTRY OF PUBLIC WORKS DIRECTORATE GENERAL OF HIGHWAYS	PROJECT AND LOCATION :	SCALE :	DRAWING TITLE :	DRAWING NO :
	Name: T. OKUMURA	Name: T. OKUMURA	Name: M. KIUCHI		DETAILED DESIGN STUDY OF NORTH JAVA CORRIDOR FLYOVER PROJECT GEBANG FLYOVER - CONTRACT PACKAGE 2 (NAGREG - GEBANG) WEST JAVA PROVINCE	1 : 200	PLAN & ELEVATION OF EPS EMBANKMENT (ABUTMENT A1) 2 OF 2	GEP-003
	Sign	Sign	Sign	APPROVED BY: Ir. HERRY VAZA M,Eng.Sc NIP. : 110038400				SHEET NO :
	Date	Date	Date	Sign / Date		FULL SIZE A3		03 / 11

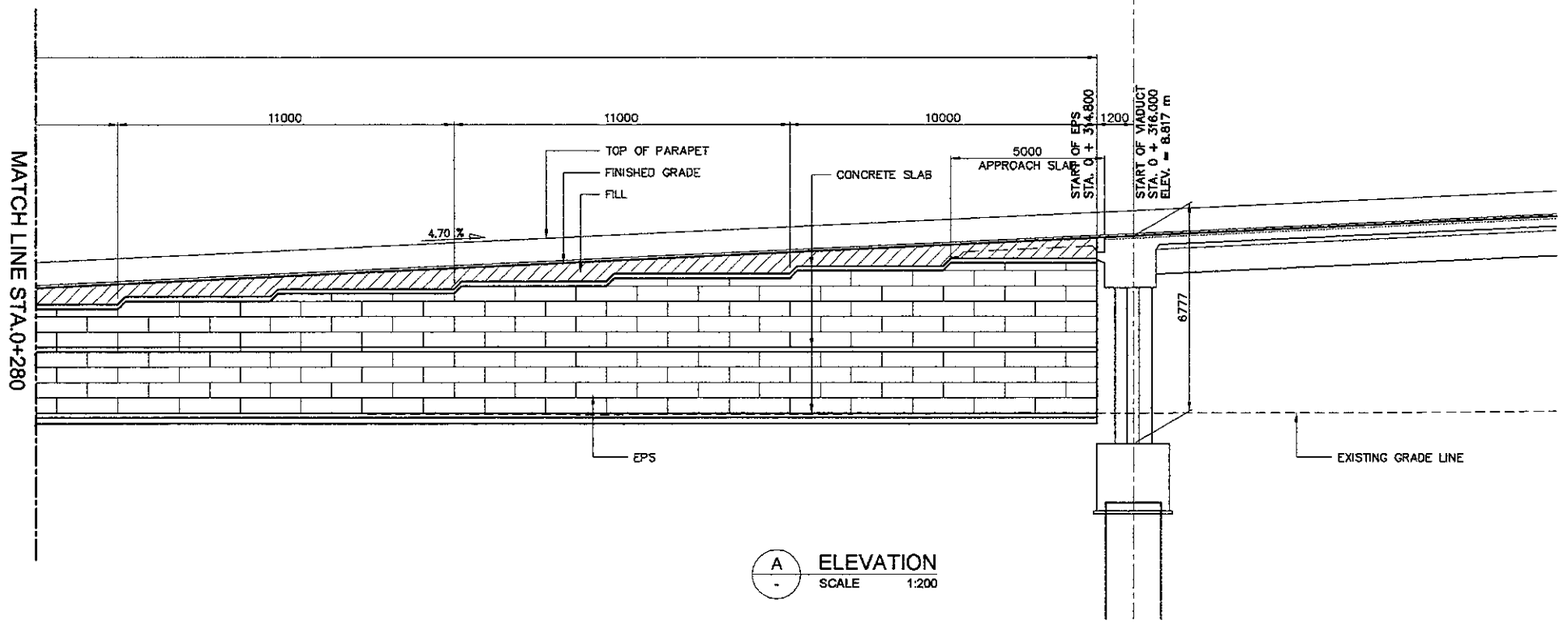

A - ELEVATION
SCALE 1:200

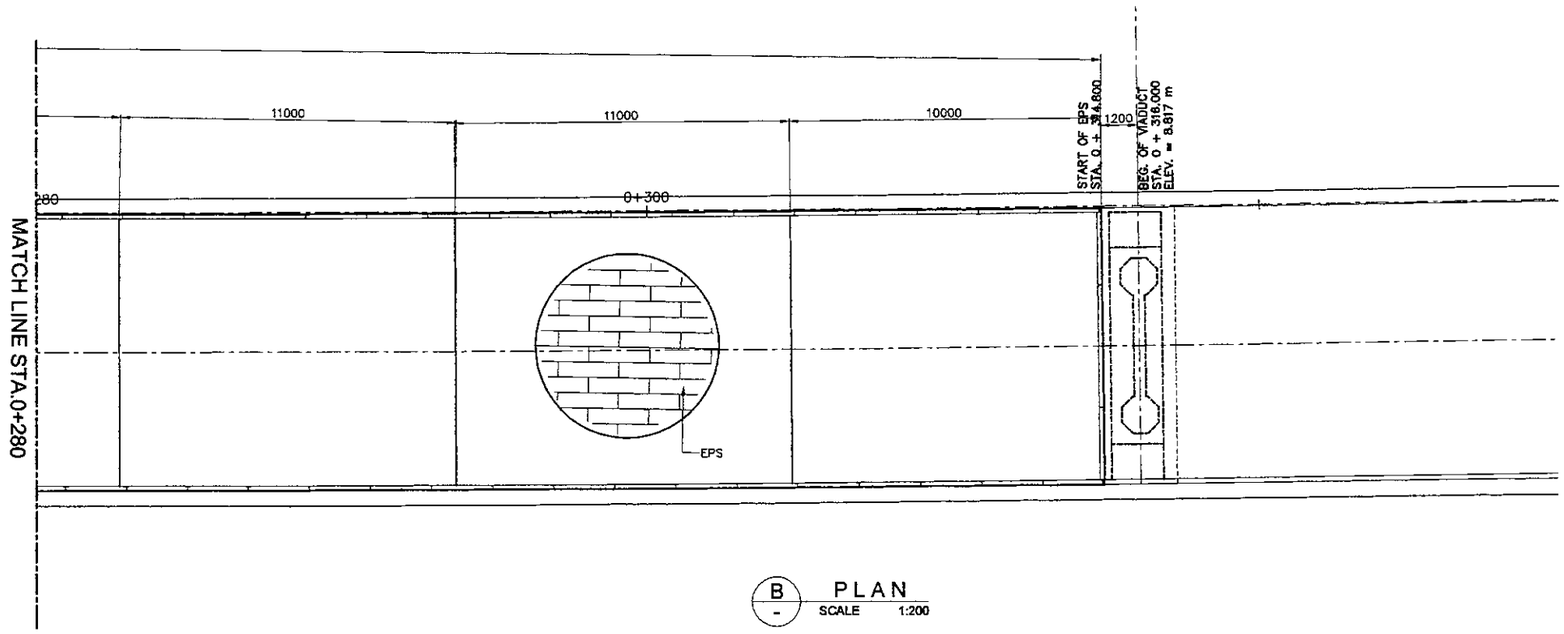

B - PLAN
SCALE 1:200

1 - PLAN & ELEV. OF EPS EMBANKMENT (ABUT. A1)
SCALE 1:200

JAPAN INTERNATIONAL COOPERATION AGENCY / KATAHIRA & ENGINEERS INTERNATIONAL	DESIGNED BY	CHECKED BY	SUBMITTED BY	REPUBLIC OF INDONESIA MINISTRY OF PUBLIC WORKS DIRECTORATE GENERAL OF HIGHWAYS	PROJECT AND LOCATION :	SCALE :	DRAWING TITLE :	DRAWING NO :
	Name: T. OKUMURA	Name: T. OKUMURA	Name: M. KIUCHI		DETAILED DESIGN STUDY OF NORTH JAVA CORRIDOR FLYOVER PROJECT GEBANG FLYOVER - CONTRACT PACKAGE 2 (NAGREG - GEBANG) WEST JAVA PROVINCE	1 : 100	SECTION & DETAIL OF EPS WALL & STUBWALL AT ABUTMENT A1 SIDE	GEP-004
	Sign	Sign	Sign	APPROVED BY: Ir. HERRY VAZA M,Eng.Sc NIP. : 110038400				SHEET NO :
	Date	Date	Date	Sign / Date		FULL SIZE A3		04 / 11

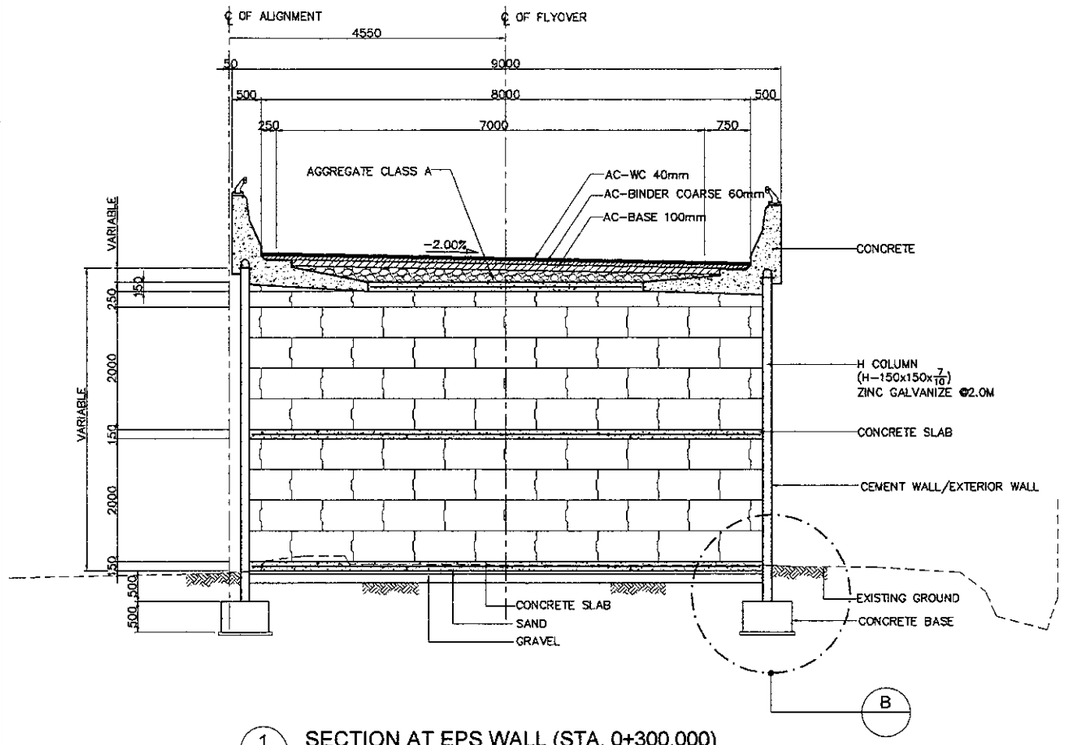

1 SECTION AT EPS WALL (STA. 0+300.000)
SCALE 1:100

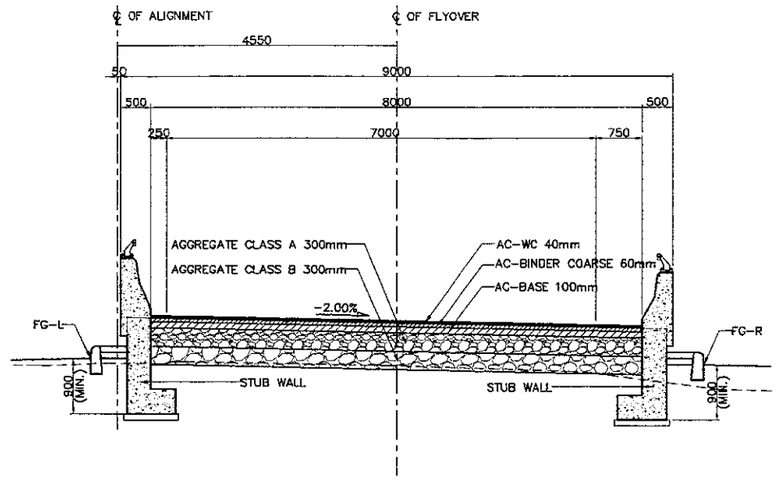

3 SECTION AT STUB WALL (STA. 0+200.000)
SCALE 1:100

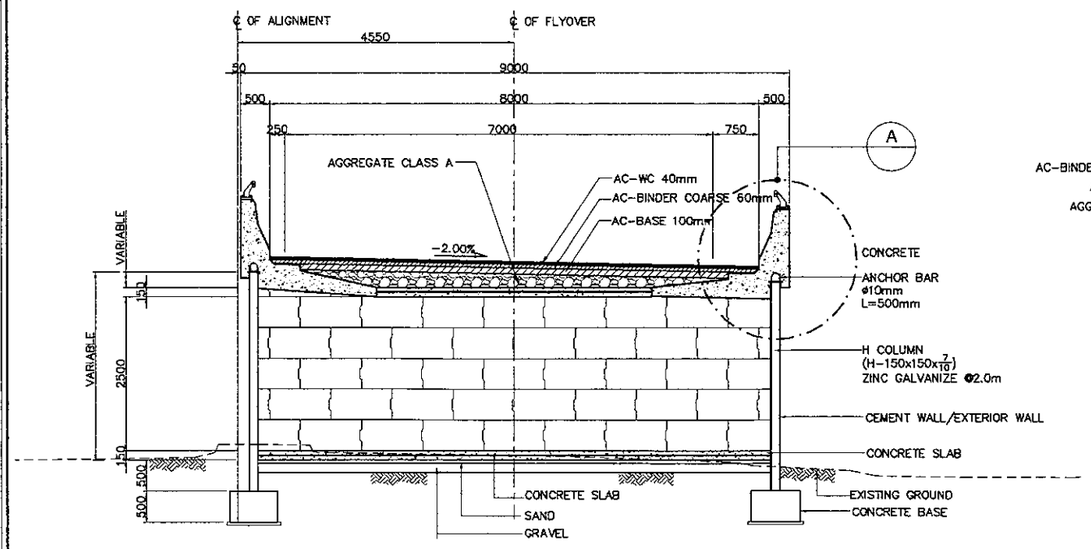

2 SECTION AT EPS WALL (STA. 0+260.000)
SCALE 1:100

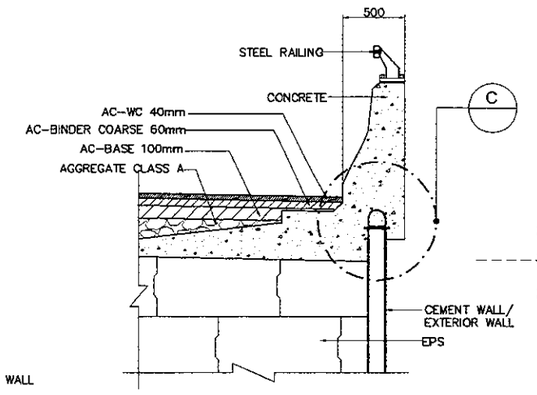

A DETAIL
SCALE 1:50

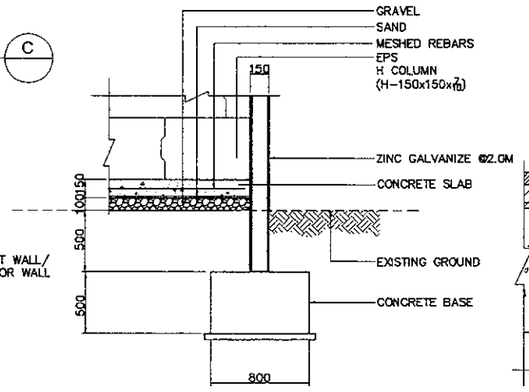

B DETAIL
SCALE 1:50

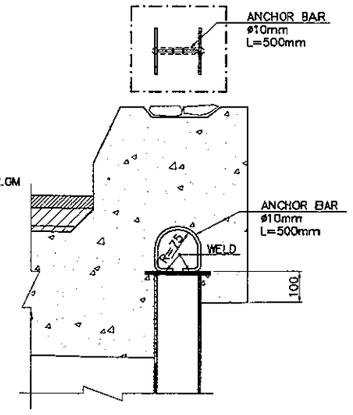

C DETAIL
SCALE 1:20

JAPAN INTERNATIONAL COOPERATION AGENCY KATAHIRA & ENGINEERS INTERNATIONAL	DESIGNED BY	CHECKED BY	SUBMITTED BY	REPUBLIC OF INDONESIA MINISTRY OF PUBLIC WORKS DIRECTORATE GENERAL OF HIGHWAYS	PROJECT AND LOCATION :	SCALE :	DRAWING TITLE :	DRAWING NO :
	Name: T. OKUMURA	Name: T. OKUMURA	Name: M. KIUCHI		DETAILED DESIGN STUDY OF NORTH JAVA CORRIDOR FLYOVER PROJECT GEBANG FLYOVER - CONTRACT PACKAGE 2 (NAGREG - GEBANG) WEST JAVA PROVINCE	1 : 200	PLAN & ELEVATION OF EPS EMBANKMENT (ABUTMENT A2) 1 OF 2	GEP-005
	Sign	Sign	Sign	APPROVED BY: Ir. HERRY VAZA M,Eng.Sc NIP. : 110038400		FULL SIZE A3		SHEET NO : 05 / 11
	Date	Date	Date	Sign / Date				

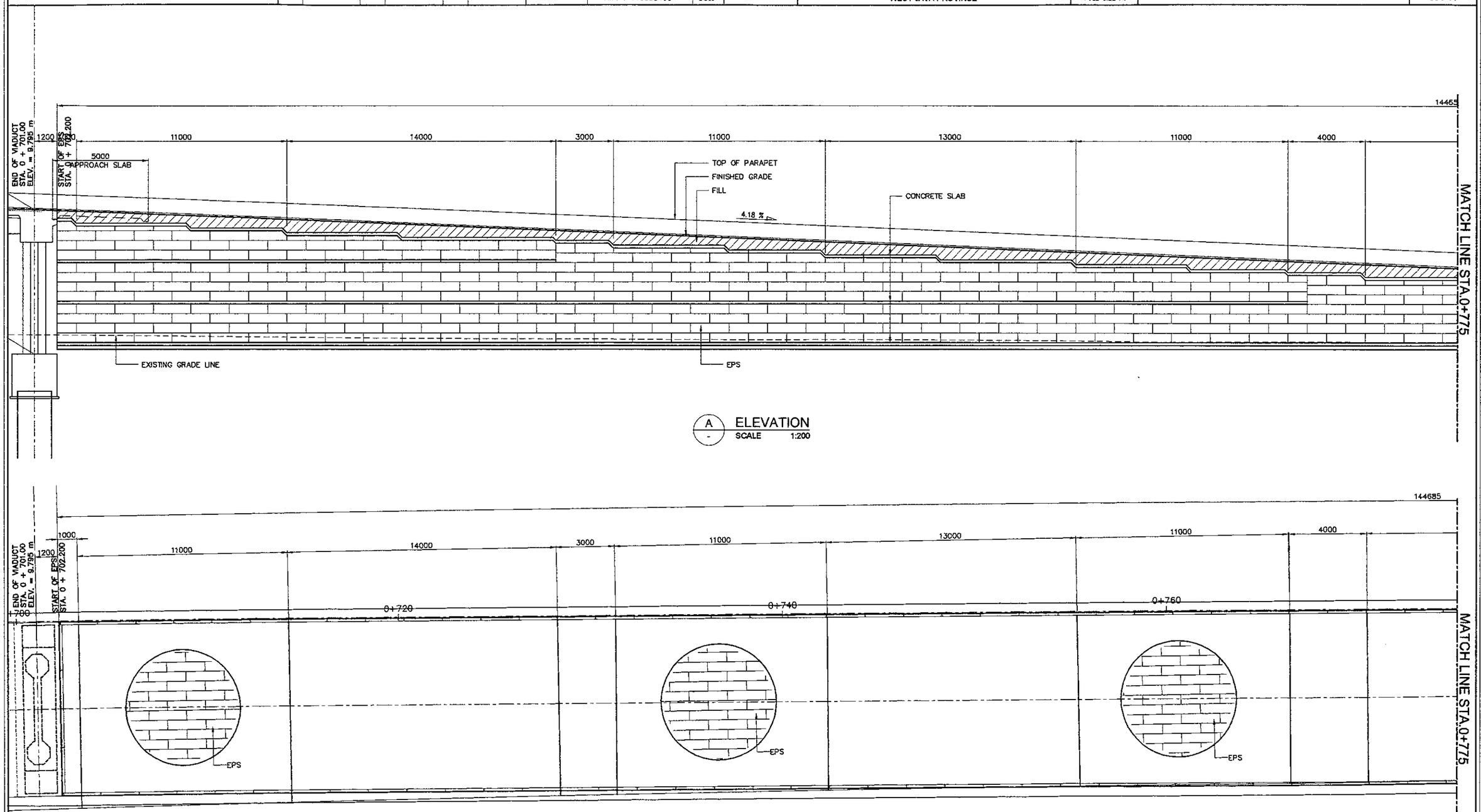

1 PLAN & ELEV. OF EPS EMBANKMENT (ABUT. A2)
SCALE 1:200

JAPAN INTERNATIONAL COOPERATION AGENCY KATAHIRA & ENGINEERS INTERNATIONAL	DESIGNED BY	CHECKED BY	SUBMITTED BY	REPUBLIC OF INDONESIA MINISTRY OF PUBLIC WORKS DIRECTORATE GENERAL OF HIGHWAYS	PROJECT AND LOCATION :	SCALE :	DRAWING TITLE :	DRAWING NO :
	Name: T. OKUMURA	Name: T. OKUMURA	Name: M. KIUCHI		DETAILED DESIGN STUDY OF NORTH JAVA CORRIDOR FLYOVER PROJECT GEBANG FLYOVER - CONTRACT PACKAGE 2 (NAGREG - GEBANG) WEST JAVA PROVINCE	1 : 200	PLAN & ELEVATION OF EPS EMBANKMENT (ABUTMENT A2) 2 OF 2	GEP-006
	Sign	Sign	Sign	APPROVED BY: Ir. HERRY VAZA M,Eng.Sc NIP. : 110038400		FULL SIZE A3		SHEET NO : 06 / 11
	Date	Date	Date	Sign / Date				

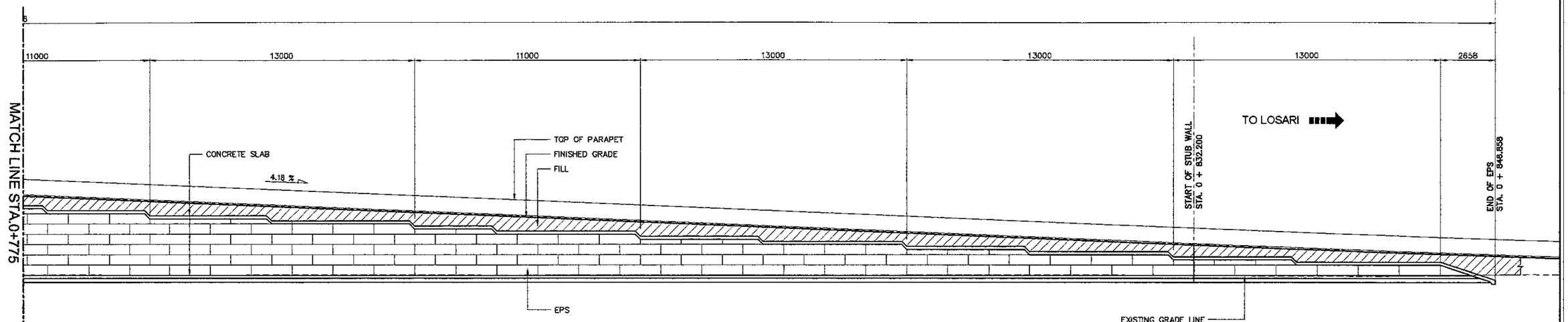

A - ELEVATION
SCALE 1:200

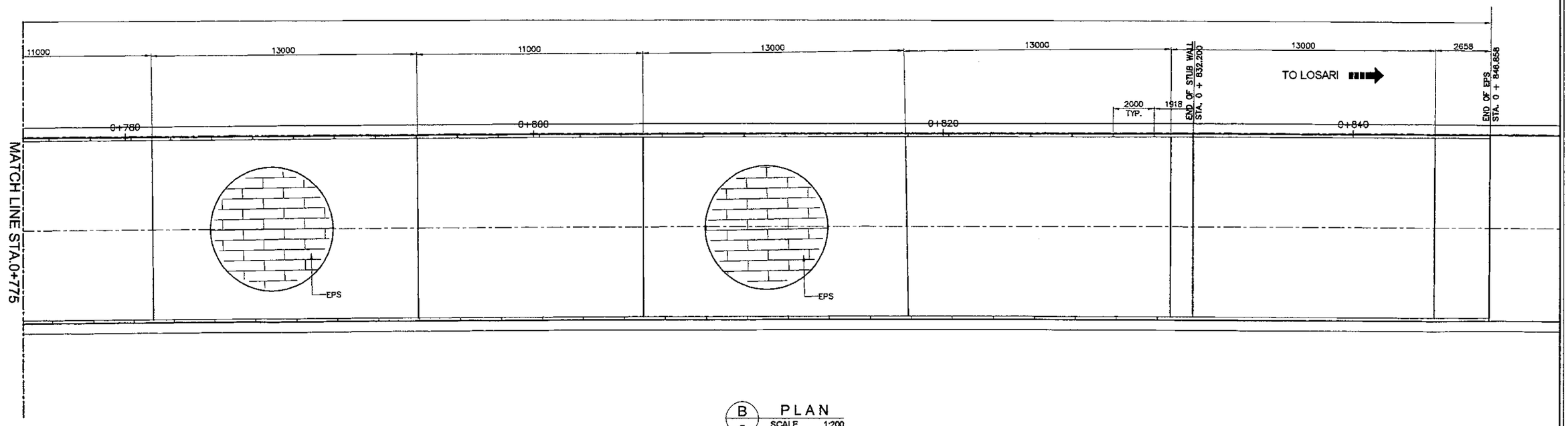

B - PLAN
SCALE 1:200

1 - PLAN & ELEV. OF EPS EMBANKMENT (ABUT. A2)
SCALE 1:200

JAPAN INTERNATIONAL COOPERATION AGENCY KATAHIRA & ENGINEERS INTERNATIONAL	DESIGNED BY	CHECKED BY	SUBMITTED BY	REPUBLIC OF INDONESIA MINISTRY OF PUBLIC WORKS DIRECTORATE GENERAL OF HIGHWAYS	PROJECT AND LOCATION :	SCALE :	DRAWING TITLE :	DRAWING NO :
	Name: R. UENO	Name: T. OKUMURA	Name: M. KIUCHI		DETAILED DESIGN STUDY OF NORTH JAVA CORRIDOR FLYOVER PROJECT GEBANG FLYOVER - CONTRACT PACKAGE 2 (NAGREG - GEBANG) WEST JAVA PROVINCE	1 : 100	SECTION & DETAIL OF EPS WALL & STUBWALL AT ABUTMENT A2 SIDE	GEP-007
	Sign	Sign	Sign	APPROVED BY: Ir. HERRY VAZA M,Eng.Sc NIP. : 110038400				SHEET NO :
	Date	Date	Date	Sign / Date		FULL SIZE A3		07 / 11

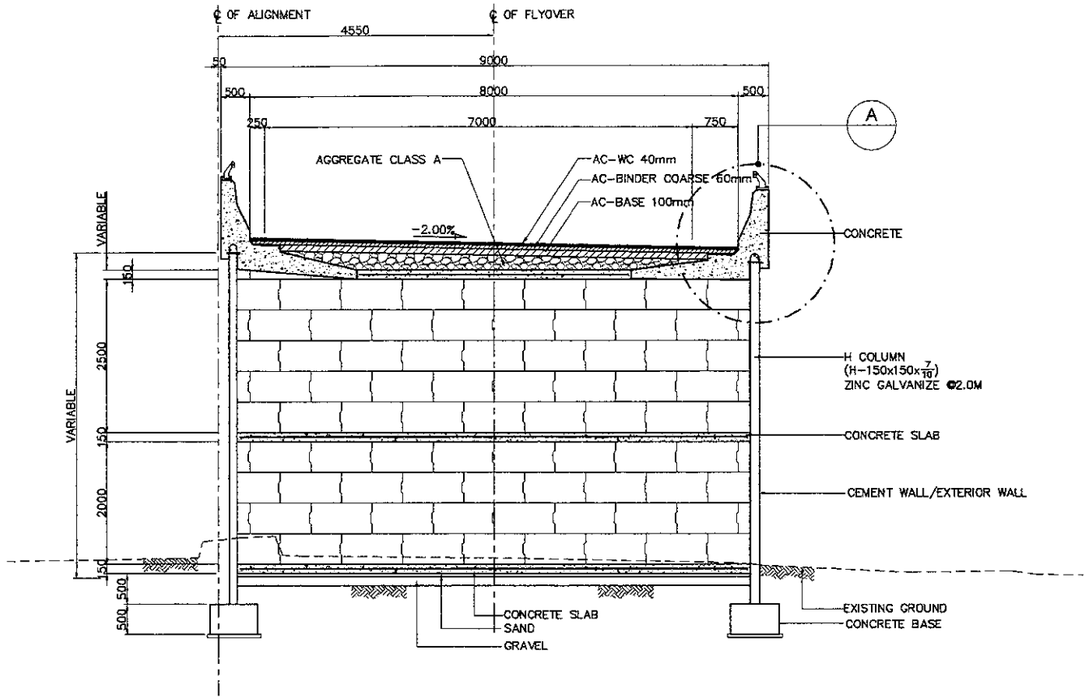

1 SECTION AT EPS WALL (STA. 0+740.000)
SCALE 1:100

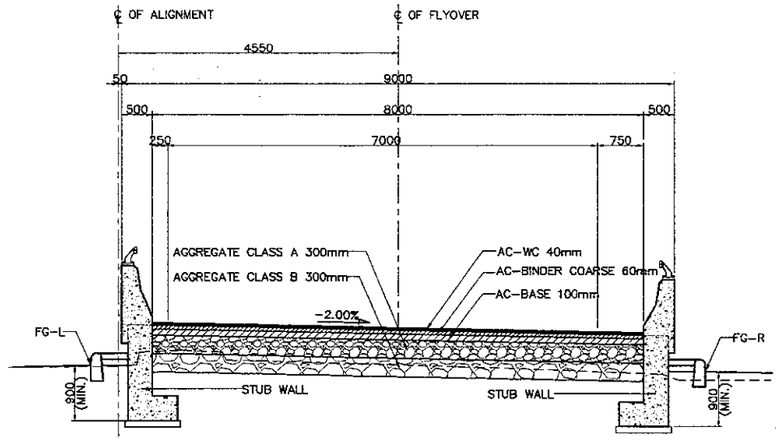

3 SECTION AT STUB WALL (STA. 0+860.000)
SCALE 1:100

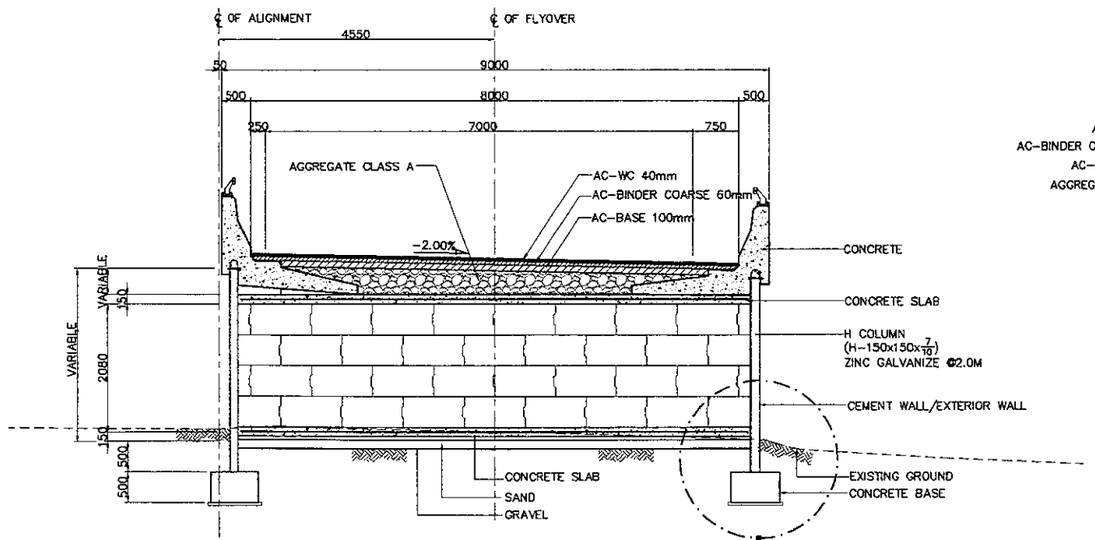

2 SECTION AT EPS WALL (STA. 0+800.000)
SCALE 1:100

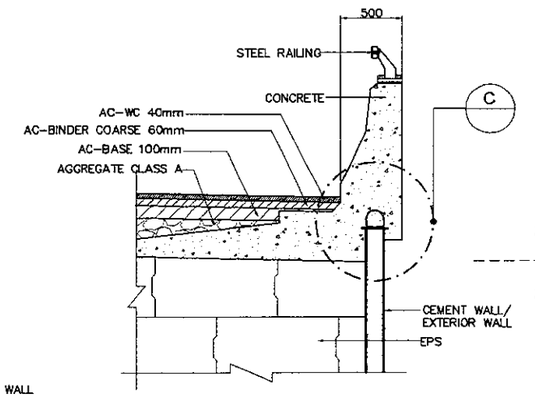

A DETAIL
SCALE 1:50

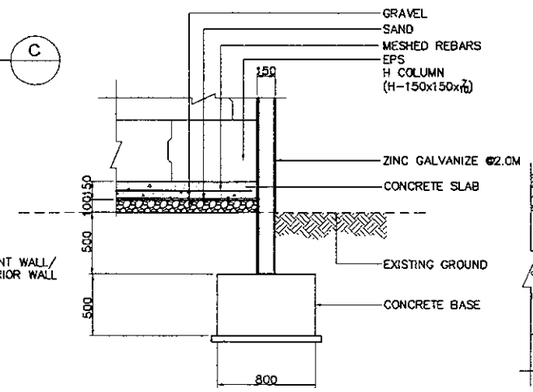

B DETAIL
SCALE 1:50

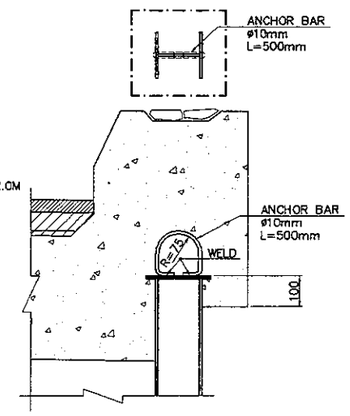

C DETAIL
SCALE 1:20

JAPAN INTERNATIONAL COOPERATION AGENCY / KATAHIRA & ENGINEERS INTERNATIONAL	DESIGNED BY	CHECKED BY	SUBMITTED BY	REPUBLIC OF INDONESIA MINISTRY OF PUBLIC WORKS DIRECTORATE GENERAL OF HIGHWAYS	PROJECT AND LOCATION :	SCALE :	DRAWING TITLE :	DRAWING NO :
	Name: T. OKUMURA	Name: T. OKUMURA	Name: M. KIUCHI		DETAILED DESIGN STUDY OF NORTH JAVA CORRIDOR FLYOVER PROJECT GEBANG FLYOVER - CONTRACT PACKAGE 2 (NAGREG - GEBANG) WEST JAVA PROVINCE	AS SHOWN	TYPICAL DETAILS	GEP-008
	Sign	Sign	Sign	APPROVED BY: Ir. HERRY VAZA M,Eng.Sc NIP. : 110038400		FULL SIZE A3		SHEET NO : 08 / 11
	Date	Date	Date	Sign / Date				

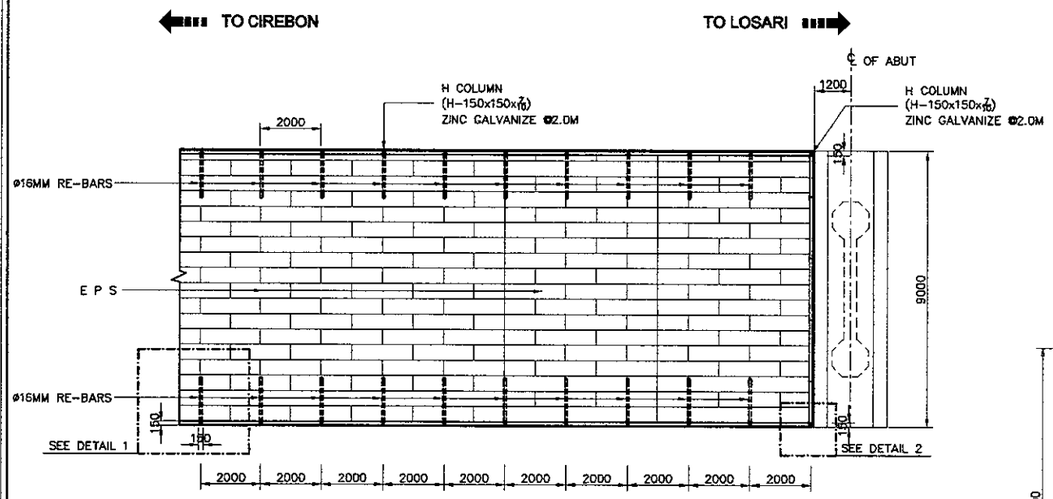

1 PLAN
SCALE 1:200

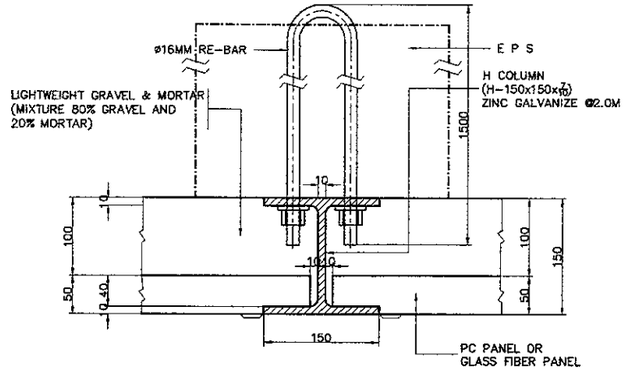

3 DETAIL 1
SCALE 1:8

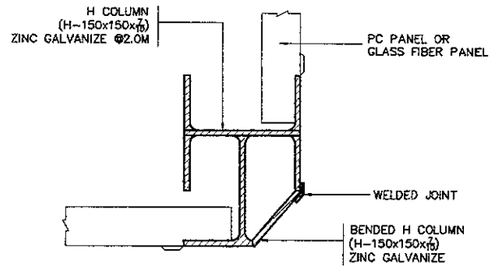

4 DETAIL 2
SCALE 1:8

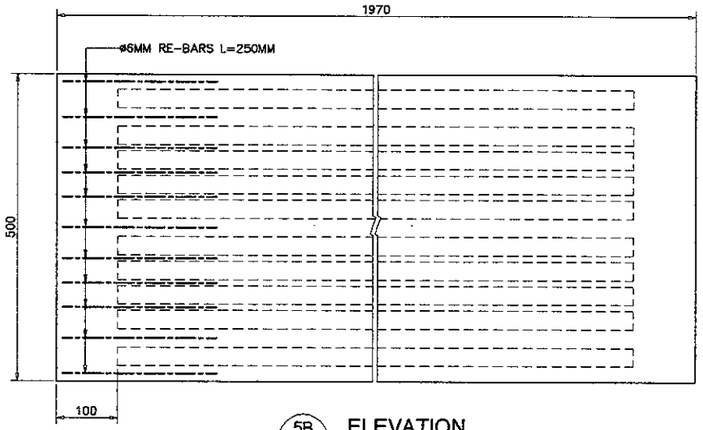

5B ELEVATION
SCALE 1:10

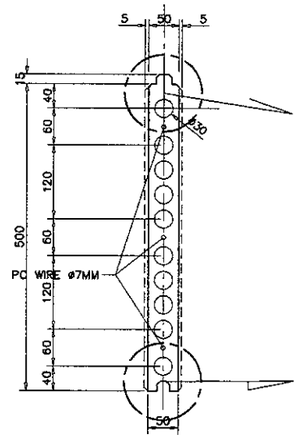

5C SECTION
SCALE 1:10

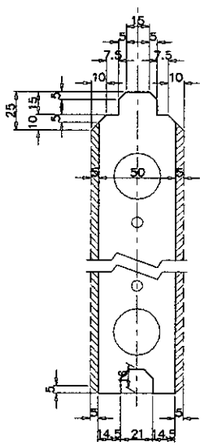

5C1 ENLARGE DETAIL
SCALE 1:4

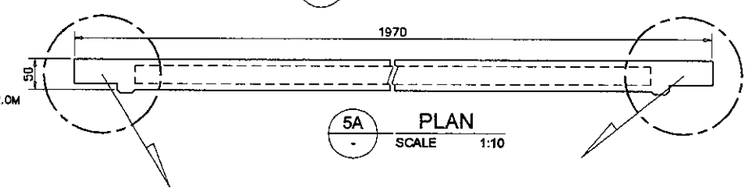

5A PLAN
SCALE 1:10

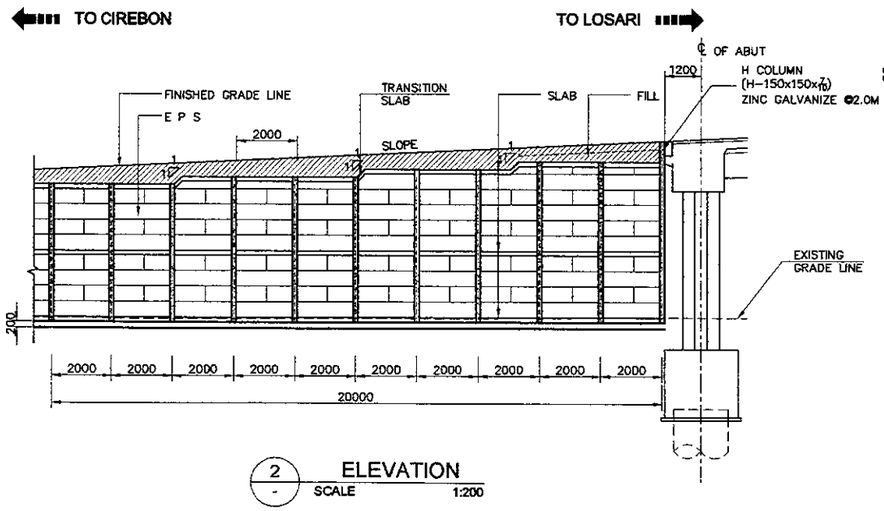

2 ELEVATION
SCALE 1:200

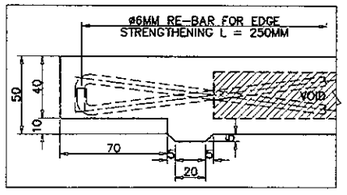

5A1 ENLARGE DETAIL
SCALE 1:4

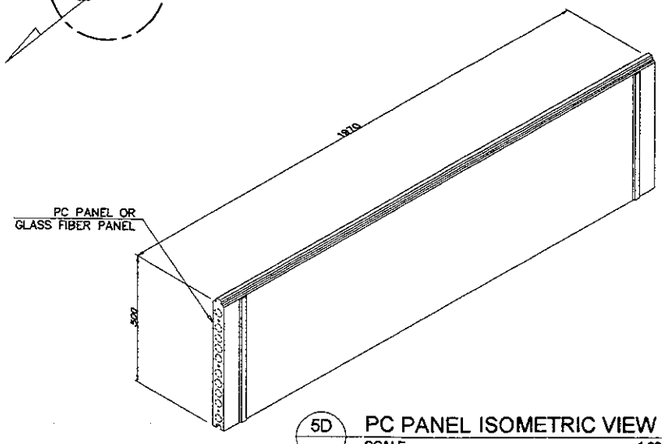

5D PC PANEL ISOMETRIC VIEW
SCALE 1:20

5 PC PANEL LAYOUT DETAILS
SCALE AS SHOWN

JAPAN INTERNATIONAL COOPERATION AGENCY KATAHIRA & ENGINEERS INTERNATIONAL	DESIGNED BY		CHECKED BY		SUBMITTED BY		REPUBLIC OF INDONESIA MINISTRY OF PUBLIC WORKS DIRECTORATE GENERAL OF HIGHWAYS				PROJECT AND LOCATION :	SCALE :	DRAWING TITLE :	DRAWING NO :
	Name	T. OKUMURA	Name	T. OKUMURA	Name	M. KIUCHI					DETAILED DESIGN STUDY OF NORTH JAVA CORRIDOR FLYOVER PROJECT GEBANG FLYOVER - CONTRACT PACKAGE 2 (NAGREG - GEBANG) WEST JAVA PROVINCE	AS SHOWN	ISOMETRIC VIEWS	GEP-009
	Sign		Sign		Sign		APPROVED BY	Ir. HERRY VAZA M,Eng.Sc	Sign					SHEET NO :
	Date		Date		Date			NIP. : 110038400	Date			FULL SIZE A3		09 / 11

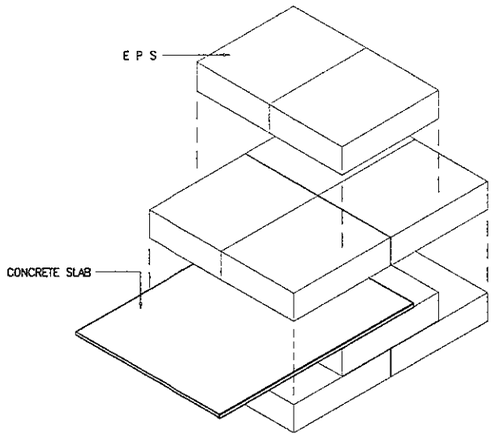

1 - EXPLODED
SCALE 1:40

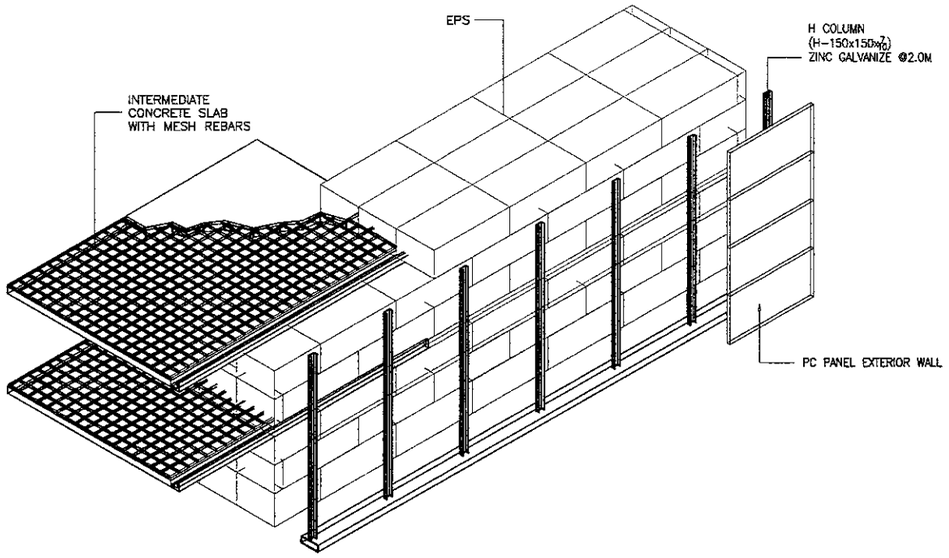

3 - EXPLODED
SCALE 1:40

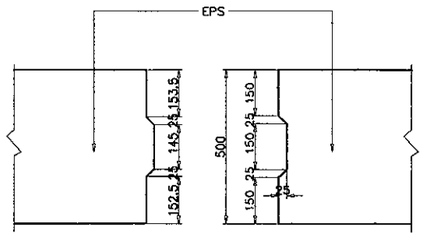

5 - JOINT DETAIL
SCALE 1:20

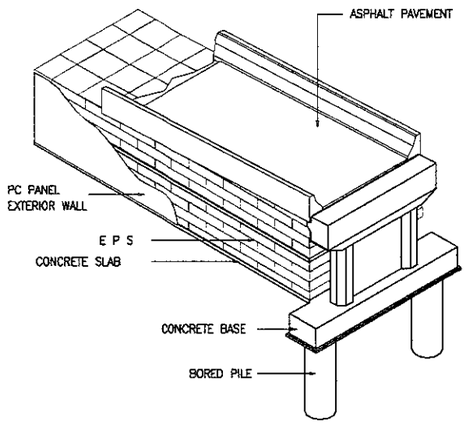

2 - ISOMETRIC
SCALE 1:40

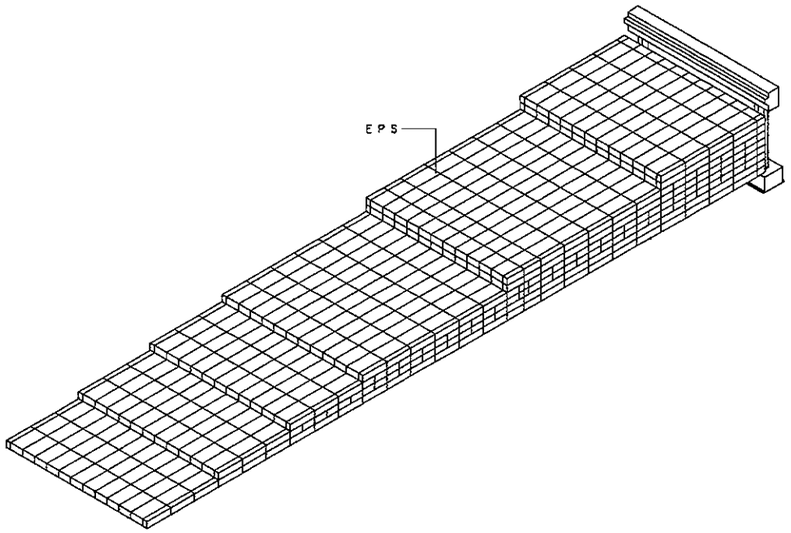

4 - ISOMETRIC
SCALE NTS

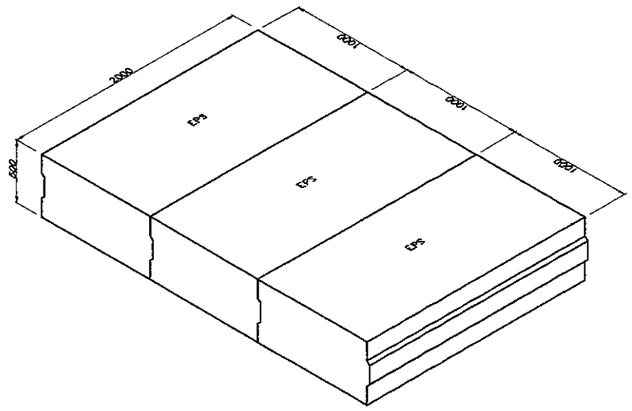

6 - ISOMETRIC
SCALE 1:40

JAPAN INTERNATIONAL COOPERATION AGENCY KATAHIRA & ENGINEERS INTERNATIONAL	DESIGNED BY	CHECKED BY	SUBMITTED BY	REPUBLIC OF INDONESIA MINISTRY OF PUBLIC WORKS DIRECTORATE GENERAL OF HIGHWAYS	PROJECT AND LOCATION :	SCALE :	DRAWING TITLE :	DRAWING NO :
	Name: T. OKUMURA	Name: T. OKUMURA	Name: M. KIUCHI		DETAILED DESIGN STUDY OF NORTH JAVA CORRIDOR FLYOVER PROJECT GEBANG FLYOVER - CONTRACT PACKAGE 2 (NAGREG - GEBANG) WEST JAVA PROVINCE	AS SHOWN	STUBWALL LAYOUT & REINFORCEMENT DETAILS (ABUT. A1 SIDE)	GEP-010
	Sign	Sign	Sign	APPROVED BY: Ir. HERRY VAZA M,Eng.Sc				SHEET NO :
	Date	Date	Date	NIP. : 110038400		FULL SIZE A3		10 / 11

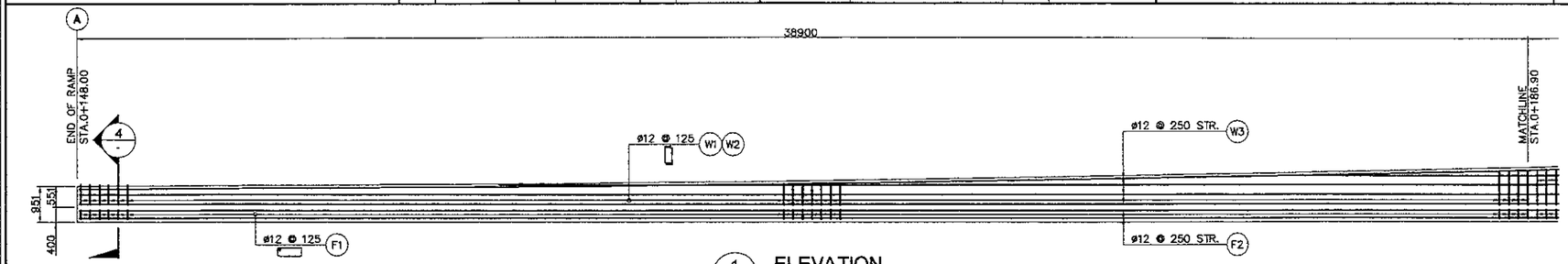

1 ELEVATION
SCALE 1:150

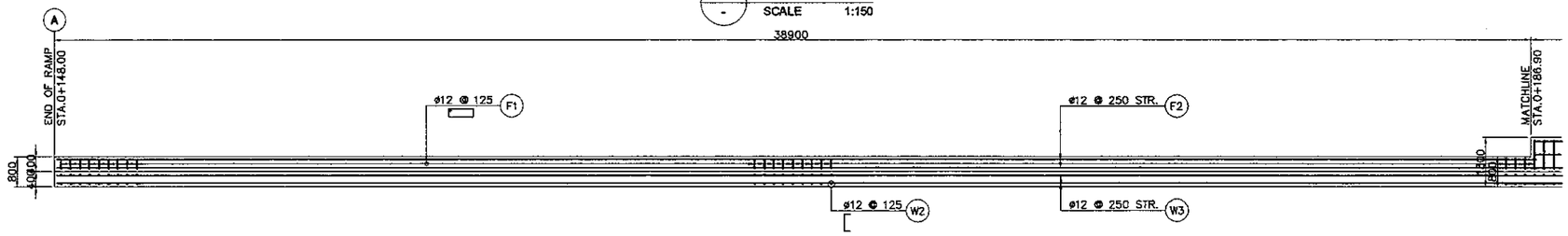

2 PLAN
SCALE 1:150

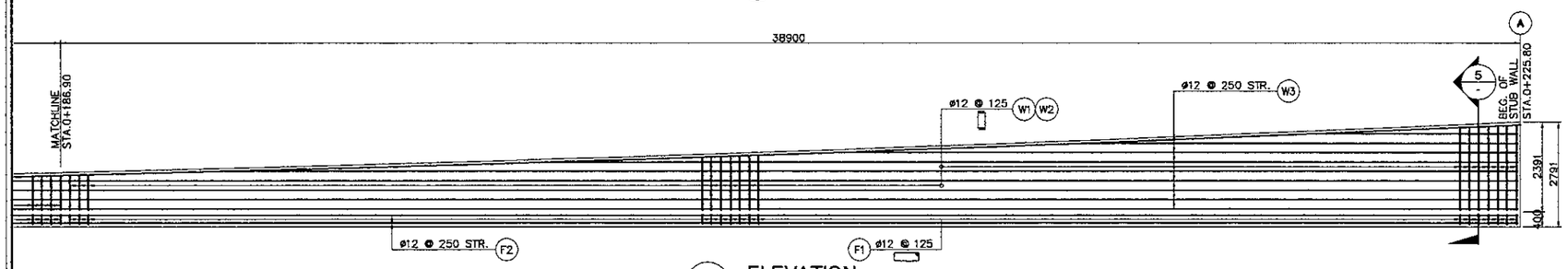

1a ELEVATION
SCALE 1:150

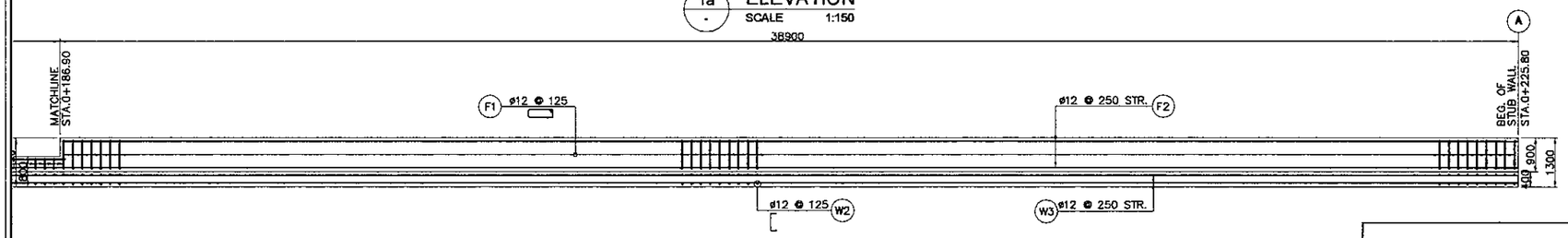

2a PLAN
SCALE 1:150

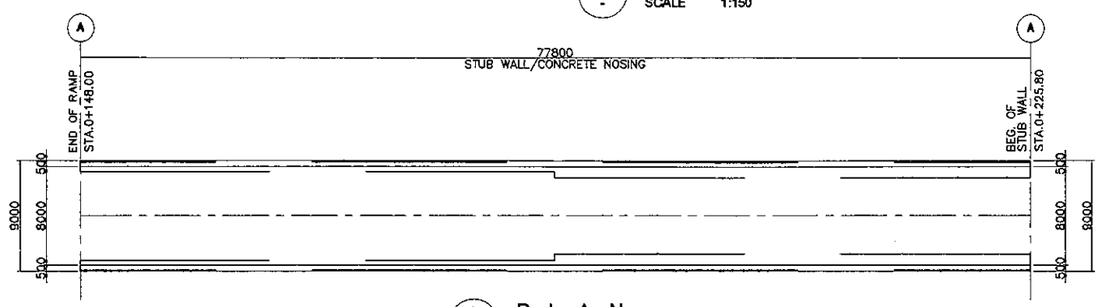

3 PLAN
SCALE 1:500

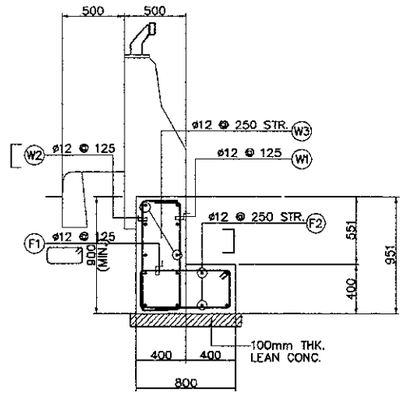

4 SECTION
SCALE 1:50

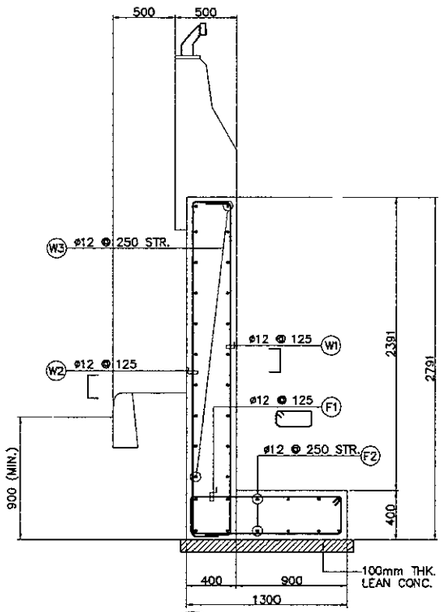

5 SECTION
SCALE 1:50

BAR BENDING DIAGRAM

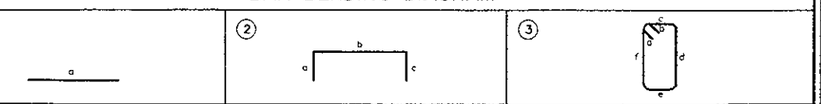

SCHEDULE OF REINFORCEMENT

LOCATION	BAR MARK	SIZE (mm)	BEND TYPE	DIMENSION (mm) OUT TO OUT a	b	c	d	e	f	LENGTH (mm)	NO. REQ'D.	UNIT WT (kg/m)	WEIGHT (kg)	REMARKS
(W1-W2) LEFT & RIGHT	W1	12	2	300	1648	300				2248	1246	0.888	2487	b is ave.
	W2	12	2	300	1648	300				2248	1246	0.888	2487	b is ave.
	W3	12	1	12000						12000	120	0.888	1279	b is ave.
	W3a	12	1	7820						7820	20	0.888	139	
	F1	12	3	150	150	720	320	720	320	2380	624	0.888	1319	
	F1a	12	3	150	150	1220	320	1220	320	3380	624	0.888	1873	
	F2	12	1	12000						12000	48	0.888	511	
	F2a	12	1	3760						3760	16	0.888	53	
	F3	12	1	12000						12000	72	0.888	767	
	F3a	12	1	3760						3760	24	0.888	80	
									TOTAL WEIGHT =				10,995.00	

THE REINFORCEMENT SHOWN ON THIS TABLE IS FOR REFERENCE ONLY, THE CONTRACTOR SHOULD CHECKED AND VERIFY ALL DIMENSIONS, SIZES AND QUANTITIES OF REINFORCEMENT.

JAPAN INTERNATIONAL COOPERATION AGENCY KATAHIRA & ENGINEERS INTERNATIONAL	DESIGNED BY	CHECKED BY	SUBMITTED BY	REPUBLIC OF INDONESIA MINISTRY OF PUBLIC WORKS DIRECTORATE GENERAL OF HIGHWAYS	PROJECT AND LOCATION :	SCALE :	DRAWING TITLE :	DRAWING NO :
	Name: T. OKUMURA	Name: T. OKUMURA	Name: M. KIUCHI		DETAILED DESIGN STUDY OF NORTH JAVA CORRIDOR FLYOVER PROJECT GEBANG FLYOVER - CONTRACT PACKAGE 2 (NAGREG - GEBANG) WEST JAVA PROVINCE	AS SHOWN	STUBWALL LAYOUT & REINFORCEMENT DETAILS (ABUT. A2 SIDE)	GEP-011
	Sign	Sign	Sign	APPROVED BY: Ir. HERRY VAZA M,Eng.Sc NIP. : 110038400		FULL SIZE A3		SHEET NO : 11 / 11
	Date	Date	Date	Sign / Date				

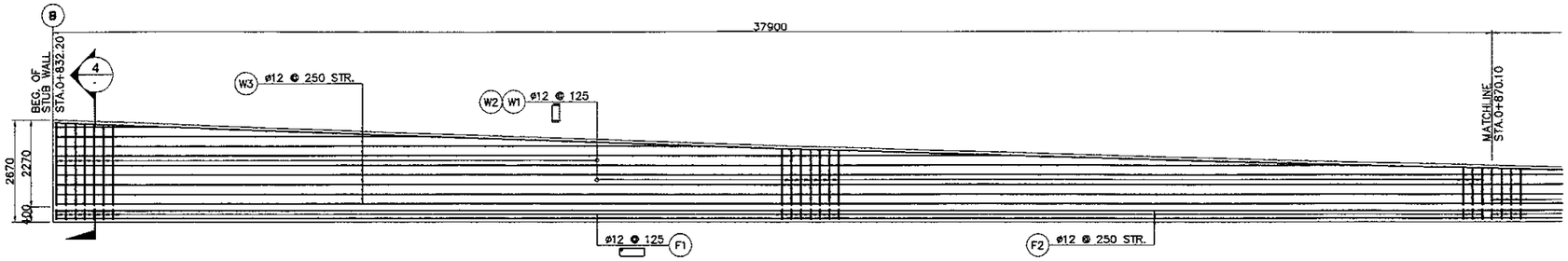

1 - ELEVATION
SCALE 1:150

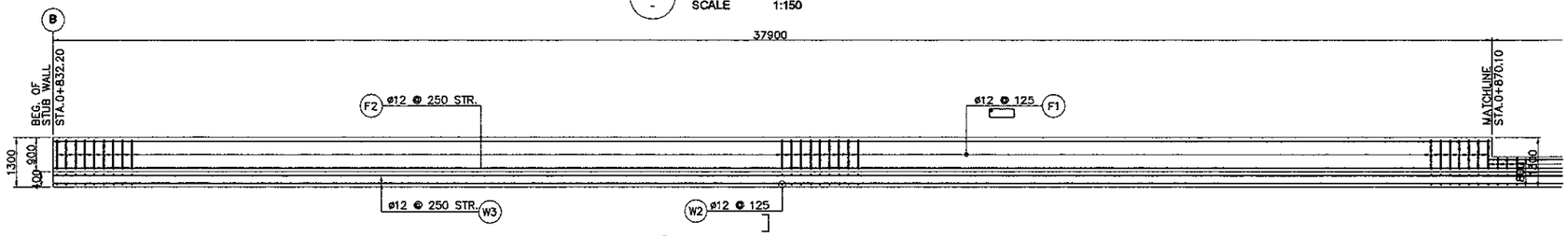

2 - P L A N
SCALE 1:150

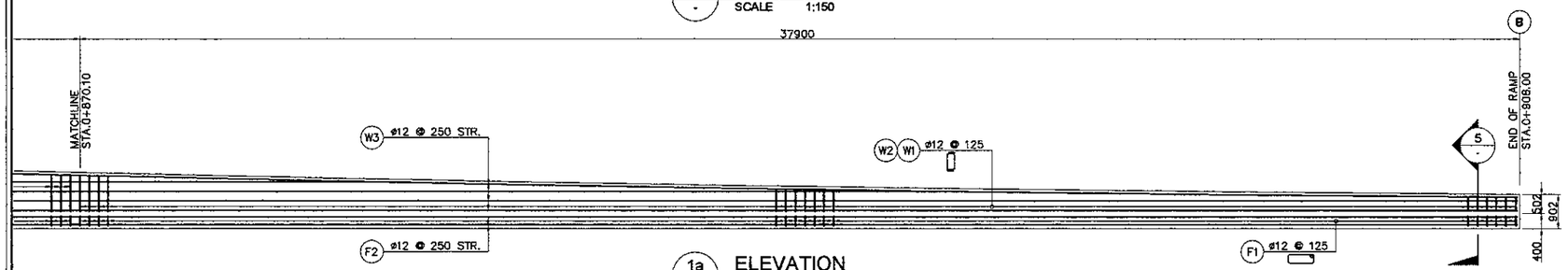

1a - ELEVATION
SCALE 1:150

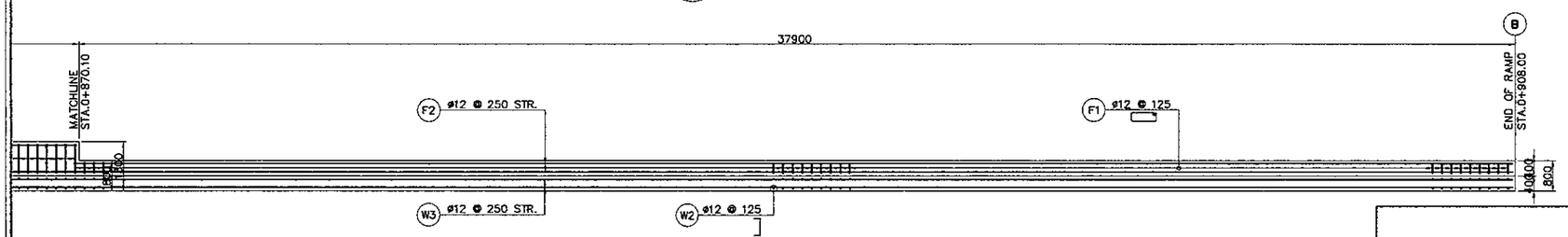

2a - P L A N
SCALE 1:150

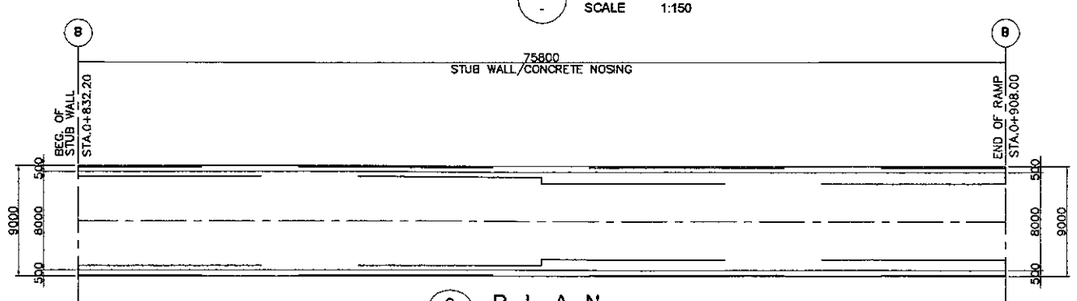

3 - P L A N
SCALE 1:500

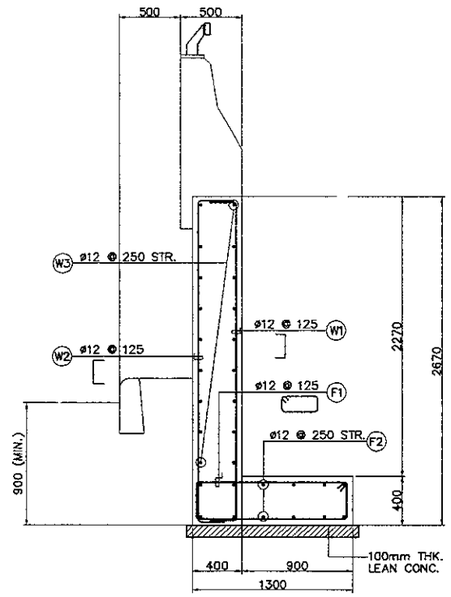

4 - SECTION
SCALE 1:50

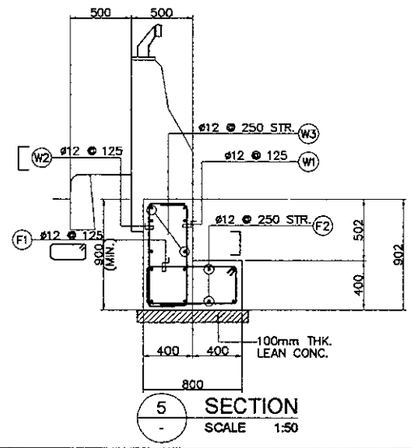

5 - SECTION
SCALE 1:50

BAR BENDING DIAGRAM

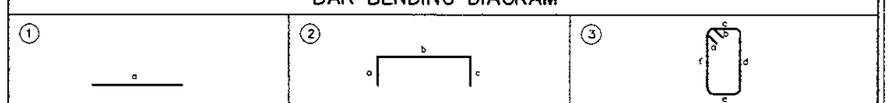

SCHEDULE OF REINFORCEMENT

LOCATION	BAR MARK	SIZE (mm)	BEND TYPE	DIMENSION (mm) OUT TO OUT a	b	c	d	e	f	LENGTH (mm)	NO. REQ'D.	UNIT WT. (kg/m)	WEIGHT (kg)	REMARKS
(W1-W2) LEFT & RIGHT	W1	12	2	300	1601	300				2201	1214	0.888	2373	b is ave.
	W2	12	2	300	1601	300				2201	1214	0.888	2373	b is ave.
	W3	12	1	12000						12000	120	0.888	1279	b is ave.
	W3a	12	1	5850						5850	20	0.888	104	
	F1	12	3	150	150	720	320	720	320	2380	608	0.888	1285	
	F1a	12	3	150	150	1220	320	1220	320	3380	608	0.888	1825	
	F2	12	1	12000						12000	48	0.888	511	
	F2a	12	1	2760						2760	16	0.888	39	
	F3	12	1	12000						12000	72	0.888	767	
	F3a	12	1	2760						2760	24	0.888	59	
									TOTAL WEIGHT =				10,615.00	

THE REINFORCEMENT SHOWN ON THIS TABLE IS FOR REFERENCE ONLY, THE CONTRACTOR SHOULD CHECKED AND VERIFY ALL DIMENSIONS, SIZES AND QUANTITIES OF REINFORCEMENT.

JAPAN INTERNATIONAL
COOPERATION AGENCY

DIRECTORATE GENERAL OF HIGHWAY
MINISTRY OF PUBLIC WORKS
REPUBLIC OF INDONESIA

TRAFFIC CONTROL

KATAHIRA & ENGINEERS INTERNATIONAL

JAPAN INTERNATIONAL COOPERATION AGENCY KATAHIRA & ENGINEERS INTERNATIONAL	DESIGNED BY	CHECKED BY	SUBMITTED BY	REPUBLIC OF INDONESIA MINISTRY OF PUBLIC WORKS DIRECTORATE GENERAL OF HIGHWAYS	PROJECT AND LOCATION :	SCALE :	DRAWING TITLE :	DRAWING NO :
	Name: R. UENO	Name: T. OKUMURA	Name: M. KIUCHI		DETAILED DESIGN STUDY OF NORTH JAVA CORRIDOR FLYOVER PROJECT GEBANG FLYOVER - CONTRACT PACKAGE 2 (NAGREG - GEBANG) WEST JAVA PROVINCE	1 : 1000	TRAFFIC SIGNS AND ROAD MARKINGS LAYOUT(FLYOVER) 1 OF 2	GTR-001
	Sign	Sign	Sign	APPROVED BY: Ir. HERRY VAZA M,Eng.Sc NIP. : 110038400				SHEET NO : 01 / 26
	Date	Date	Date	Sign / Date		FULL SIZE A3		

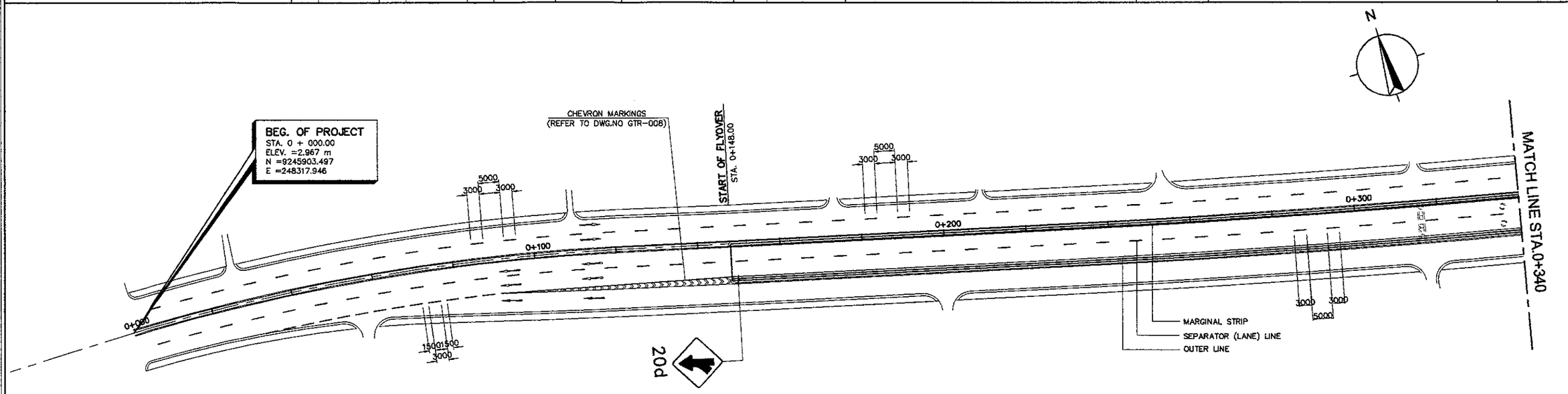

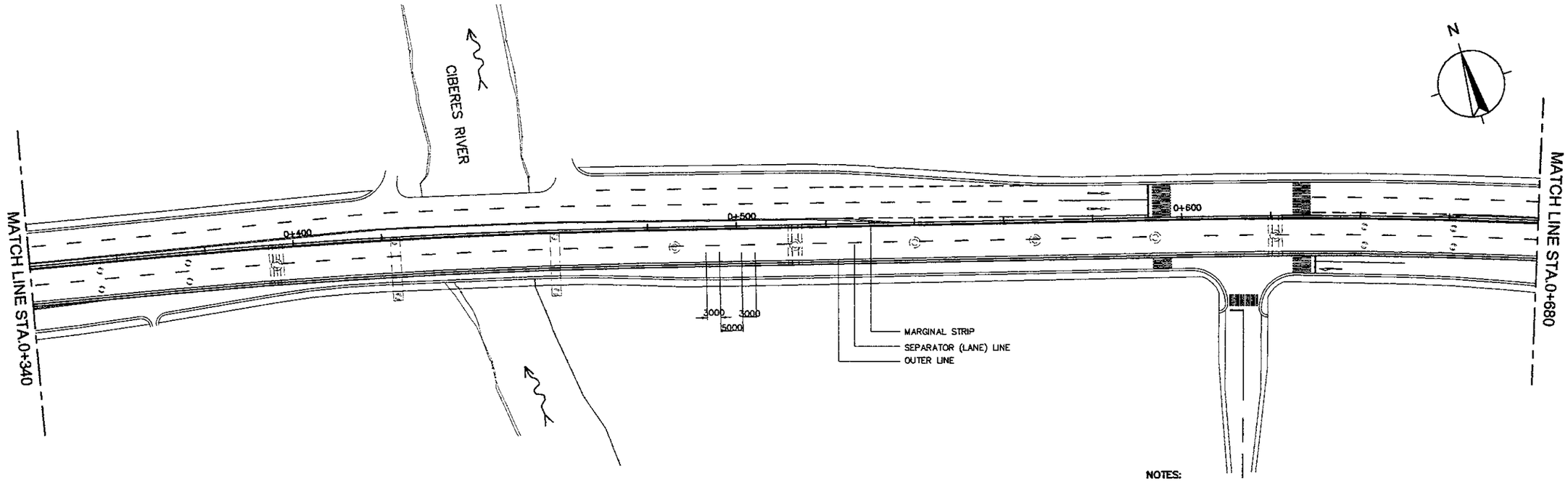

1 / - TRAFFIC SIGNS AND ROAD MARKINGS LAYOUT(FLYOVER) 1 OF 2

SCALE 1:1000

NOTES:

1. ALL DIMENSIONS ARE IN MILLIMETERS.
2. FOR PAVEMENT MARKING DETAILS REFER TO DWG. GTR-006 AND GTR-007.
3. FOR STANDARD TRAFFIC SIGN DETAILS, REFER TO DWGS. GTR-009 TO GTR-012.
4. LOCATION OF SIGNS SHALL BE VERIFED DURING CONSTRUCTION.
6. OVERHEAD GUIDE SIGN SHALL BE ATTACHED TO A CANTILEVER TYPE SIGNS SUPPORT, REFER TO DWG.GTR-015 AND GTR-016.
7. DELINEATORS SHALL BE INSTALLED AT FACE OF NEW JERSEY BARRIER AND PARAPET.

JAPAN INTERNATIONAL COOPERATION AGENCY KATAHIRA & ENGINEERS INTERNATIONAL	DESIGNED BY		CHECKED BY		SUBMITTED BY		REPUBLIC OF INDONESIA MINISTRY OF PUBLIC WORKS DIRECTORATE GENERAL OF HIGHWAYS	PROJECT AND LOCATION :	SCALE :	DRAWING TITLE :	DRAWING NO :
	Name	R. UENO	Name	T. OKUMURA	Name	M. KIUCHI		DETAILED DESIGN STUDY OF NORTH JAVA CORRIDOR FLYOVER PROJECT GEBANG FLYOVER - CONTRACT PACKAGE 2 (NAGREG - GEBANG) WEST JAVA PROVINCE	1 : 1000	TRAFFIC SIGNS AND ROAD MARKINGS LAYOUT(FLYOVER) 2 OF 2	GTR-002
	Sign		Sign		Sign		APPROVED BY: Ir. HERRY VAZA M,Eng.Sc NIP. : 110038400		FULL SIZE A3		SHEET NO : 02 / 26
	Date		Date		Date		Sign / Date				

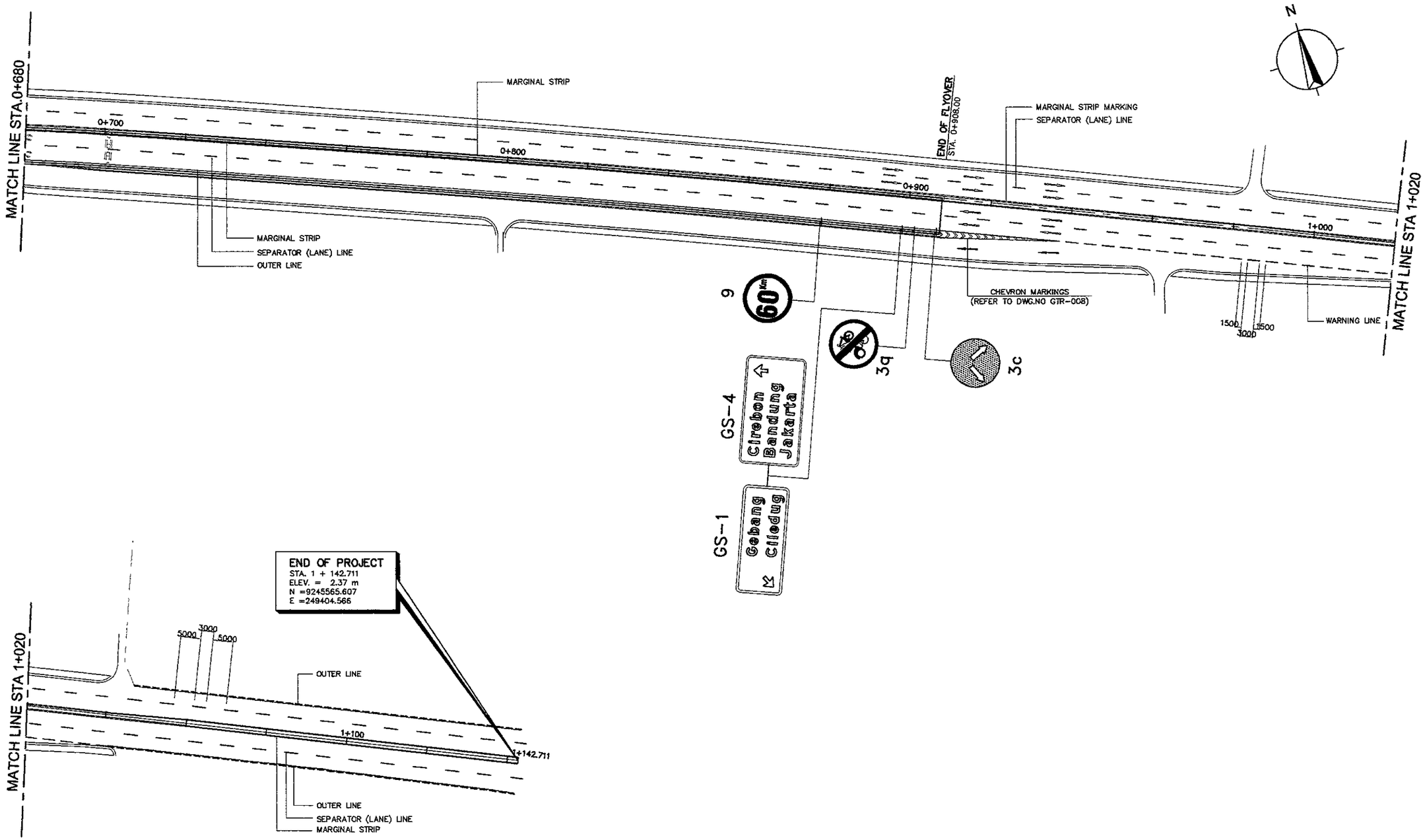

1 / - TRAFFIC SIGNS AND ROAD MARKINGS LAYOUT(FLYOVER) 2 OF 2
SCALE 1:1000

NOTES:

1. ALL DIMENSIONS ARE IN MILLIMETERS.
2. FOR PAVEMENT MARKING DETAILS REFER TO DWG. GTR-006 AND GTR-007.
3. FOR STANDARD TRAFFIC SIGN DETAILS, REFER TO DWGS. GTR-009 TO GTR-012.
4. LOCATION OF SIGNS SHALL BE VERIFED DURING CONSTRUCTION.
6. OVERHEAD GUIDE SIGN SHALL BE ATTACHED TO A CANTILEVER TYPE SIGNS SUPPORT, REFER TO DWG.GTR-015 AND GTR-016.
7. DELINEATORS SHALL BE INSTALLED AT FACE OF NEW JERSEY BARRIER AND PARAPET.

JAPAN INTERNATIONAL COOPERATION AGENCY KATAHIRA & ENGINEERS INTERNATIONAL	DESIGNED BY	CHECKED BY	SUBMITTED BY	REPUBLIC OF INDONESIA MINISTRY OF PUBLIC WORKS DIRECTORATE GENERAL OF HIGHWAYS	PROJECT AND LOCATION :	SCALE :	DRAWING TITLE :	DRAWING NO :
	Name: R. UENO	Name: T. OKUMURA	Name: M. KIUCHI		DETAILED DESIGN STUDY OF NORTH JAVA CORRIDOR FLYOVER PROJECT GEBANG FLYOVER - CONTRACT PACKAGE 2 (NAGREG - GEBANG) WEST JAVA PROVINCE	1 : 1000	TRAFFIC SIGNS AND ROAD MARKINGS LAYOUT(AT GRADE) 1 OF 2	GTR-003
	Sign	Sign	Sign	APPROVED BY: Ir. HERRY VAZA M,Eng.Sc NIP. : 110038400		FULL SIZE A3		SHEET NO : 03 / 26
	Date	Date	Date	Sign / Date				

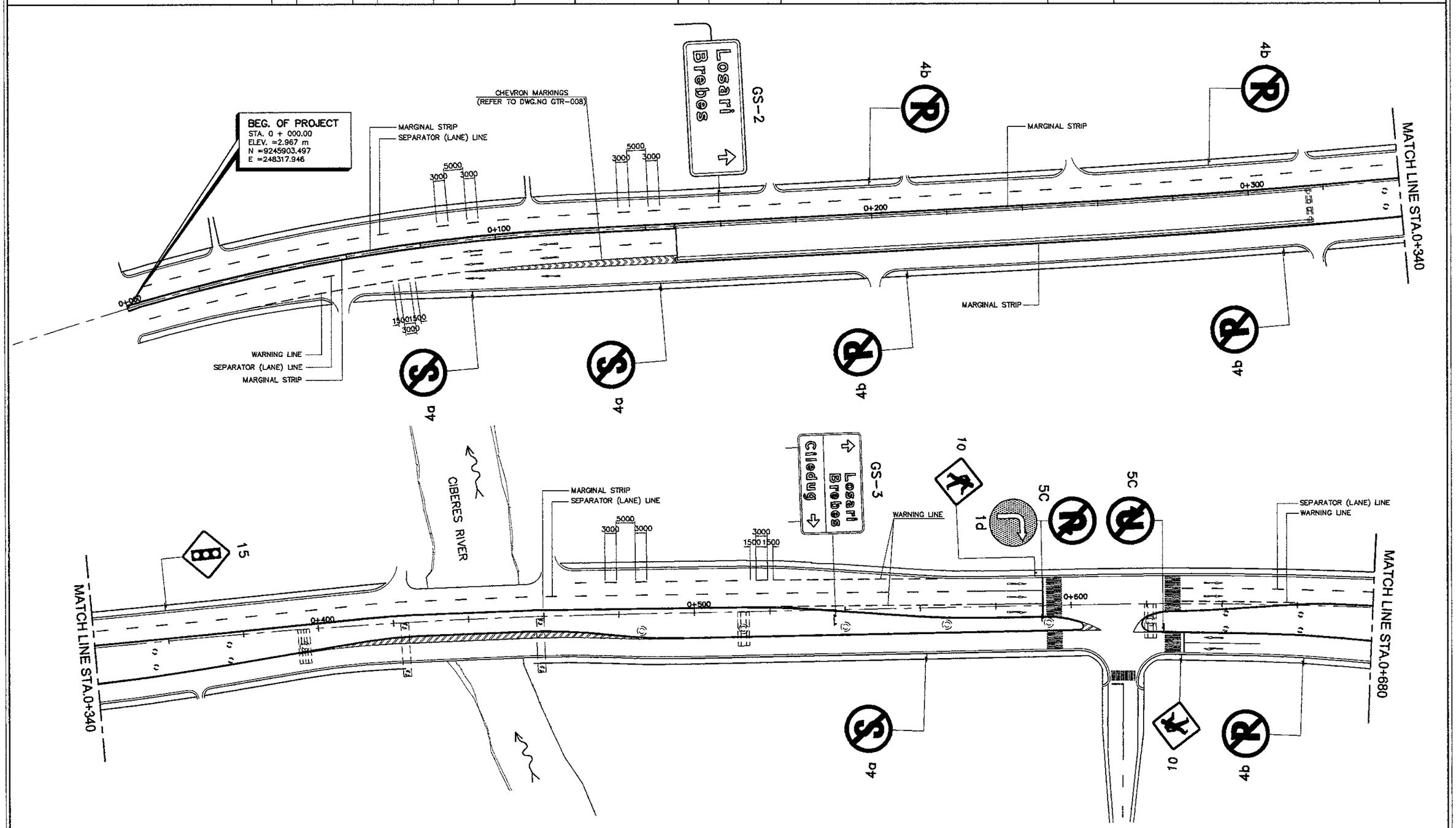

1 TRAFFIC SIGNS AND ROAD MARKINGS LAYOUT(AT GRADE) 1 OF 2
SCALE 1:1000

NOTES:

1. ALL DIMENSIONS ARE IN MILLIMETERS.
2. FOR PAVEMENT MARKING DETAILS REFER TO DWG. GTR-006 AND GTR-007.
3. FOR STANDARD TRAFFIC SIGN DETAILS, REFER TO DWGS. GTR-009 TO GTR-012.
4. LOCATION OF SIGNS SHALL BE VERIFED DURING CONSTRUCTION.
6. OVERHEAD GUIDE SIGN SHALL BE ATTACHED TO A CANTILEVER TYPE SIGNS SUPPORT, REFER TO DWG.GTR-015 AND GTR-016.
7. DELINEATORS SHALL BE INSTALLED AT FACE OF NEW JERSEY BARRIER AND PARAPET.

JAPAN INTERNATIONAL COOPERATION AGENCY KATAHIRA & ENGINEERS INTERNATIONAL	DESIGNED BY	CHECKED BY	SUBMITTED BY	REPUBLIC OF INDONESIA MINISTRY OF PUBLIC WORKS DIRECTORATE GENERAL OF HIGHWAYS	PROJECT AND LOCATION :	SCALE :	DRAWING TITLE :	DRAWING NO :
	Name R. UENO	Name T. OKUMURA	Name M. KIUCHI		DETAILED DESIGN STUDY OF NORTH JAVA CORRIDOR FLYOVER PROJECT GEBANG FLYOVER - CONTRACT PACKAGE 2 (NAGREG - GEBANG) WEST JAVA PROVINCE	1 : 1000	TRAFFIC SIGNS AND ROAD MARKINGS LAYOUT(AT GRADE) 2 OF 2	GTR-004
	Sign	Sign	Sign	APPROVED BY Ir. HERRY VAZA M,Eng.Sc NIP. : 110038400 Sign				SHEET NO :
	Date	Date	Date	Date		FULL SIZE A3		04 / 26

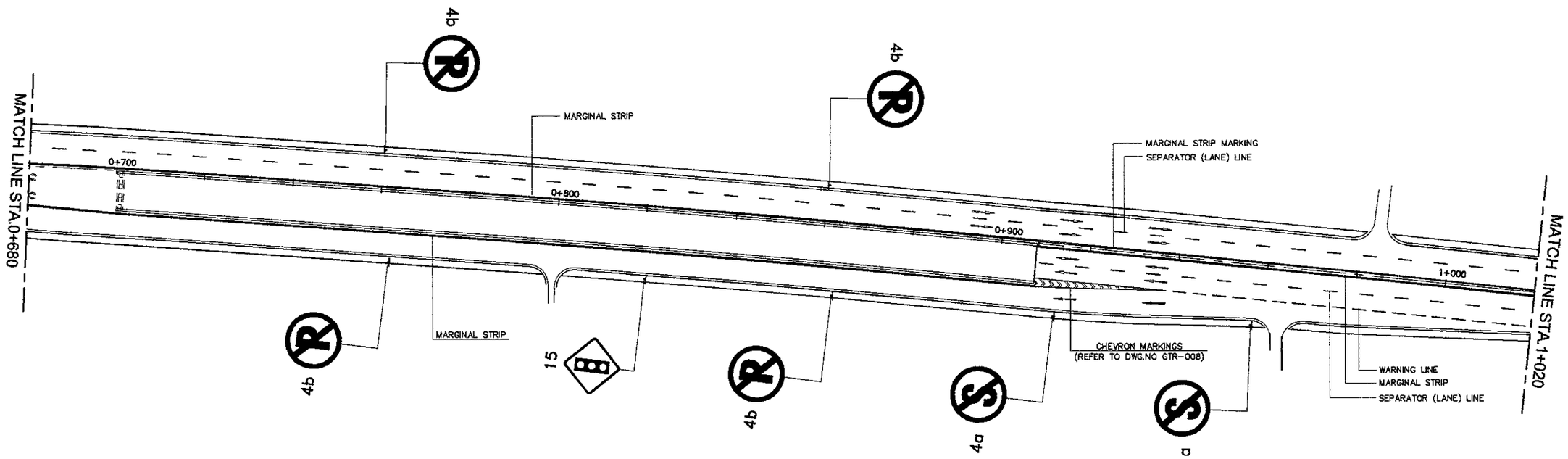

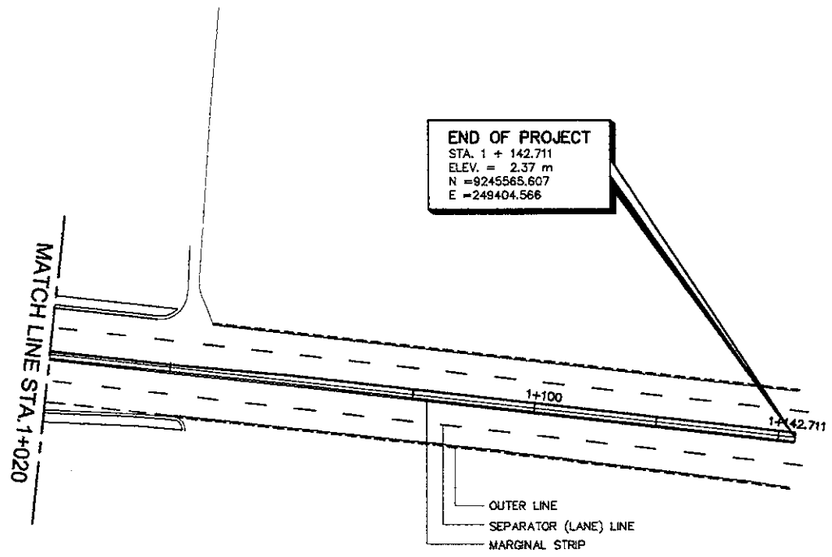

1 / - TRAFFIC SIGNS AND ROAD MARKINGS LAYOUT(AT GRADE) 2 OF 2
SCALE

NOTES:

1. ALL DIMENSIONS ARE IN MILLIMETERS.
2. FOR PAVEMENT MARKING DETAILS REFER TO DWG. GTR-006 AND GTR-007.
3. FOR STANDARD TRAFFIC SIGN DETAILS, REFER TO DWGS. GTR-009 TO GTR-012.
4. LOCATION OF SIGNS SHALL BE VERIFED DURING CONSTRUCTION.
6. OVERHEAD GUIDE SIGN SHALL BE ATTACHED TO A CANTILEVER TYPE SIGNS SUPPORT, REFER TO DWG.GTR-015 AND GTR-016.
7. DELINEATORS SHALL BE INSTALLED AT FACE OF NEW JERSEY BARRIER AND PARAPET.

JICA JAPAN INTERNATIONAL COOPERATION AGENCY / KEI KATAHIRA & ENGINEERS INTERNATIONAL	DESIGNED BY	CHECKED BY	SUBMITTED BY	REPUBLIC OF INDONESIA MINISTRY OF PUBLIC WORKS DIRECTORATE GENERAL OF HIGHWAYS	PROJECT AND LOCATION :	SCALE :	DRAWING TITLE :	DRAWING NO :
	Name: R. UENO	Name: T. OKUMURA	Name: M. KIUCHI		DETAILED DESIGN STUDY OF NORTH JAVA CORRIDOR FLYOVER PROJECT GEBANG FLYOVER - CONTRACT PACKAGE 2 (NAGREG - GEBANG) WEST JAVA PROVINCE	1 : 250	TRAFFIC SIGNAL LIGHT LAYOUT	GTR-005
	Sign	Sign	Sign	APPROVED BY: Ir. HERRY VAZA M,Eng.Sc				SHEET NO :
	Date	Date	Date	NIP. : 110038400 / Sign / Date		FULL SIZE A3		05 / 25

DESIGN PLAN LANTERN SYMBOL	LANTERN ASSEMBLY	DESIGN PLAN LANTERN SYMBOL	LANTERN ASSEMBLY
	3 ASPECT		5 ASPECT
	3 ASPECT		6 ASPECT
	4 ASPECT		PEDESTRIAN

LANTERN ASSEMBLY REFERENCE

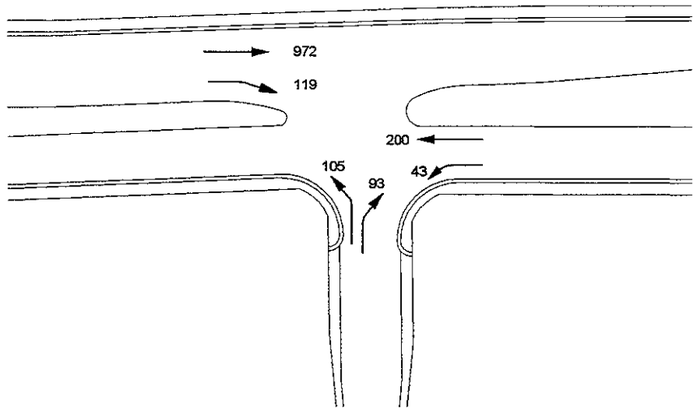

PROJECTED PEAK HOUR VOLUME (YEAR 2010)

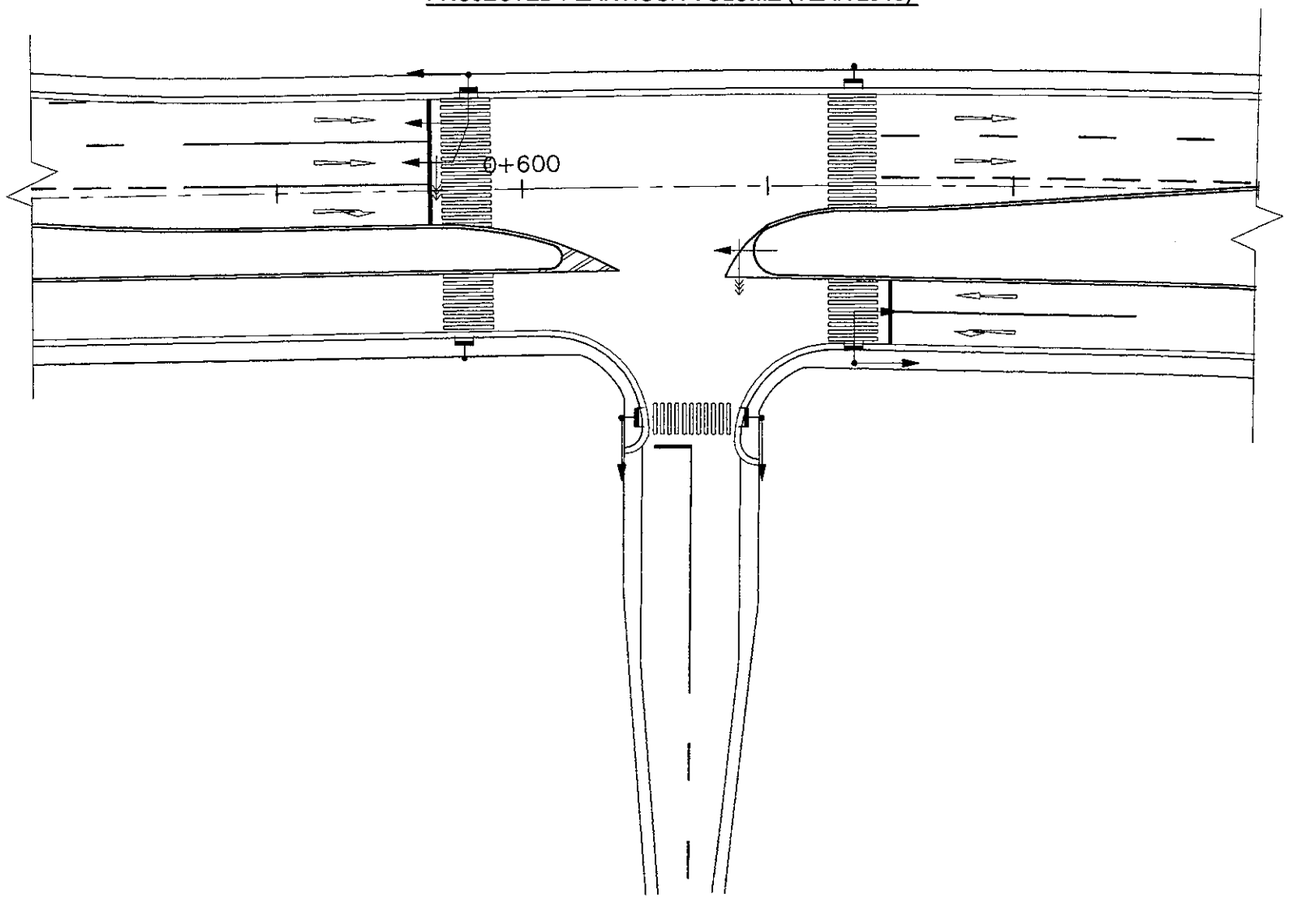

	A	B	C
G	17 SEC	4 SEC	8 SEC
Y	3 SEC	3 SEC	3 SEC
R	2 SEC	2 SEC	0 SEC
	C = 42 SEC		

SIGNAL PHASING

1 / - GENERAL ROAD MARKING AND TRAFFIC SIGN (AT GRADE)
SCALE 1:1000

JICA JAPAN INTERNATIONAL COOPERATION AGENCY / KATAHIRA & ENGINEERS INTERNATIONAL	DESIGNED BY	CHECKED BY	SUBMITTED BY	REPUBLIC OF INDONESIA MINISTRY OF PUBLIC WORKS DIRECTORATE GENERAL OF HIGHWAYS	PROJECT AND LOCATION :	SCALE :	DRAWING TITLE :	DRAWING NO :
	Name: R. UENO	Name: T. OKUMURA	Name: M. KIUCHI		DETAILED DESIGN STUDY OF NORTH JAVA CORRIDOR FLYOVER PROJECT GEBANG FLYOVER - CONTRACT PACKAGE 2 (NAGREG - GEBANG) WEST JAVA PROVINCE	1 : 50 / 1 : 200	STANDARD PAVEMENT MARKINGS DETAIL 1 OF 2	GTR-006
	Sign	Sign	Sign	APPROVED BY: Ir. HERRY VAZA M,Eng.Sc / NIP. : 110038400		FULL SIZE A3		SHEET NO : 06 / 26
	Date	Date	Date	Sign / Date				

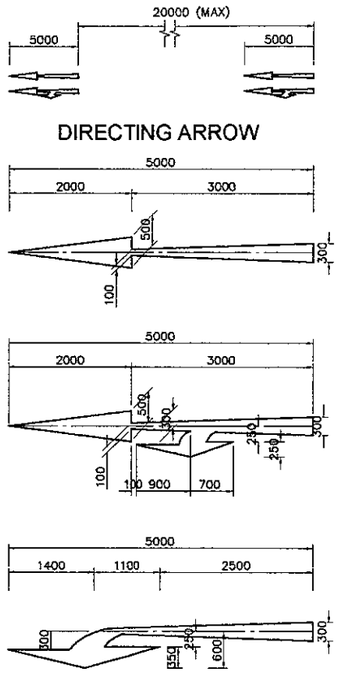

2 - ARROW MARKING DETAIL
SCALE 1 : 10

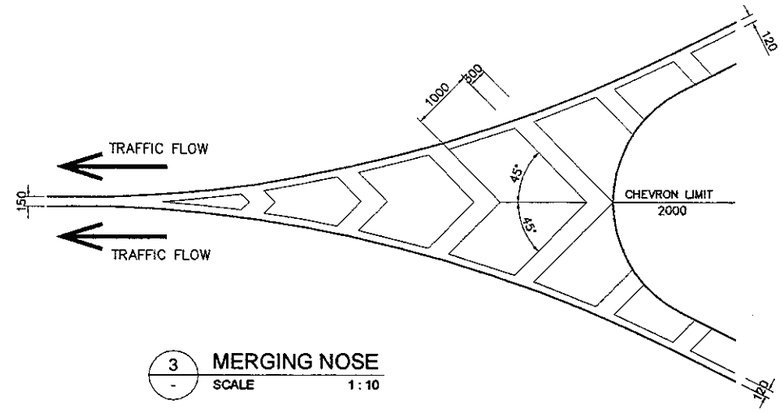

3 - MERGING NOSE
SCALE 1 : 10

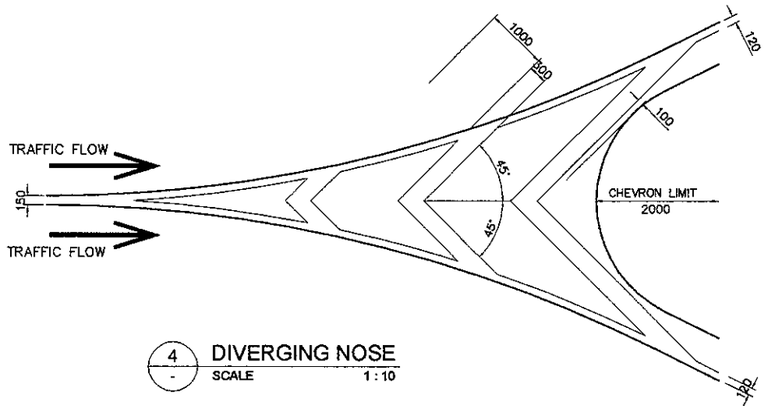

4 - DIVERGING NOSE
SCALE 1 : 10

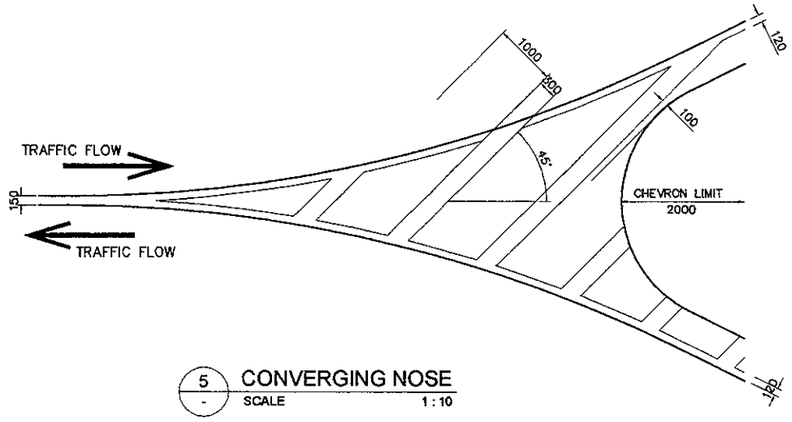

5 - CONVERGING NOSE
SCALE 1 : 10

TYPE		LANE MARKINGS
A	CONTINOUS/SOLID LINE 1. MARGINAL STRIP/ DIRECTION LINE 2. APPROACH LINE 3. STOP LINE	120 120 ±20000 300
B	BROKEN GUIDING LINE (SEPARATOR/DIVIDING LINES) (V ≤ 60 KM/H)	3000 5000 3000 5000 3000 5000 3000 5000 3000 5000 3000 — 120
C	WARNING LINE (MIN 50M)	3000 3000 3000 3000 3000 3000 3000 3000 3000 3000 — 1500 1500 1500 1500 1500 1500 1500 1500 1500 — 150

1 - TYPES OF LINE MARKING
SCALE 1 : 400

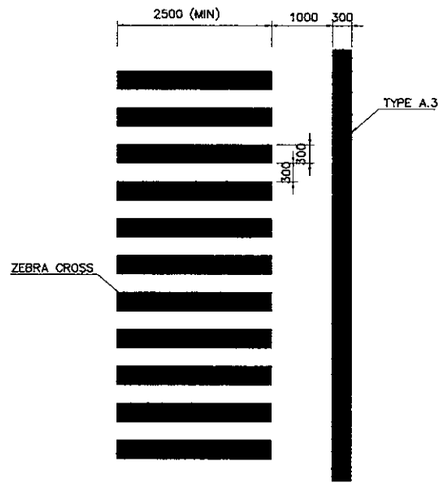

6 - STOP LINE LOCATION AT PEDESTRIAN CROSING
SCALE 1 : 10

NOTES

1. ROAD MARKINGS TO BE WHITE PAINT AND THE MATERIAL SHALL BE APPROVED BY THE ENGINEER
2. ALL DIMENSIONS ARE IN MM UNLESS OTHERWISE SHOWN
3. MARKING AT ALL LOCATIONS OF THE ROAD SHALL BE PROVIDED AS SHOWN IN THE DRAWINGS AND AS INSTRUCTED/ APPROVED BY THE ENGINEER
4. PAVEMENT/ROAD MARKINGS SHOULD CONFORM WITH THE " DINAS PERHUBUNGAN LALU LINTAS DAN ANGKUTAN JALAN SETEPAT "

JAPAN INTERNATIONAL COOPERATION AGENCY KATAHIRA & ENGINEERS INTERNATIONAL	DESIGNED BY	CHECKED BY	SUBMITTED BY	REPUBLIC OF INDONESIA MINISTRY OF PUBLIC WORKS DIRECTORATE GENERAL OF HIGHWAYS	PROJECT AND LOCATION :	SCALE :	DRAWING TITLE :	DRAWING NO :
	Name: R. UENO	Name: T. OKUMURA	Name: M. KIUCHI		DETAILED DESIGN STUDY OF NORTH JAVA CORRIDOR FLYOVER PROJECT GEBANG FLYOVER - CONTRACT PACKAGE 2 (NAGREG - GEBANG) WEST JAVA PROVINCE	0 : 00	STANDARD PAVEMENT MARKINGS DETAIL 2 OF 2	GTR-007
	Sign	Sign	Sign	APPROVED BY: Ir. HERRY VAZA M,Eng.Sc — Sign				SHEET NO :
	Date	Date	Date	NIP. : 110038400 — Date		FULL SIZE A3		07 / 26

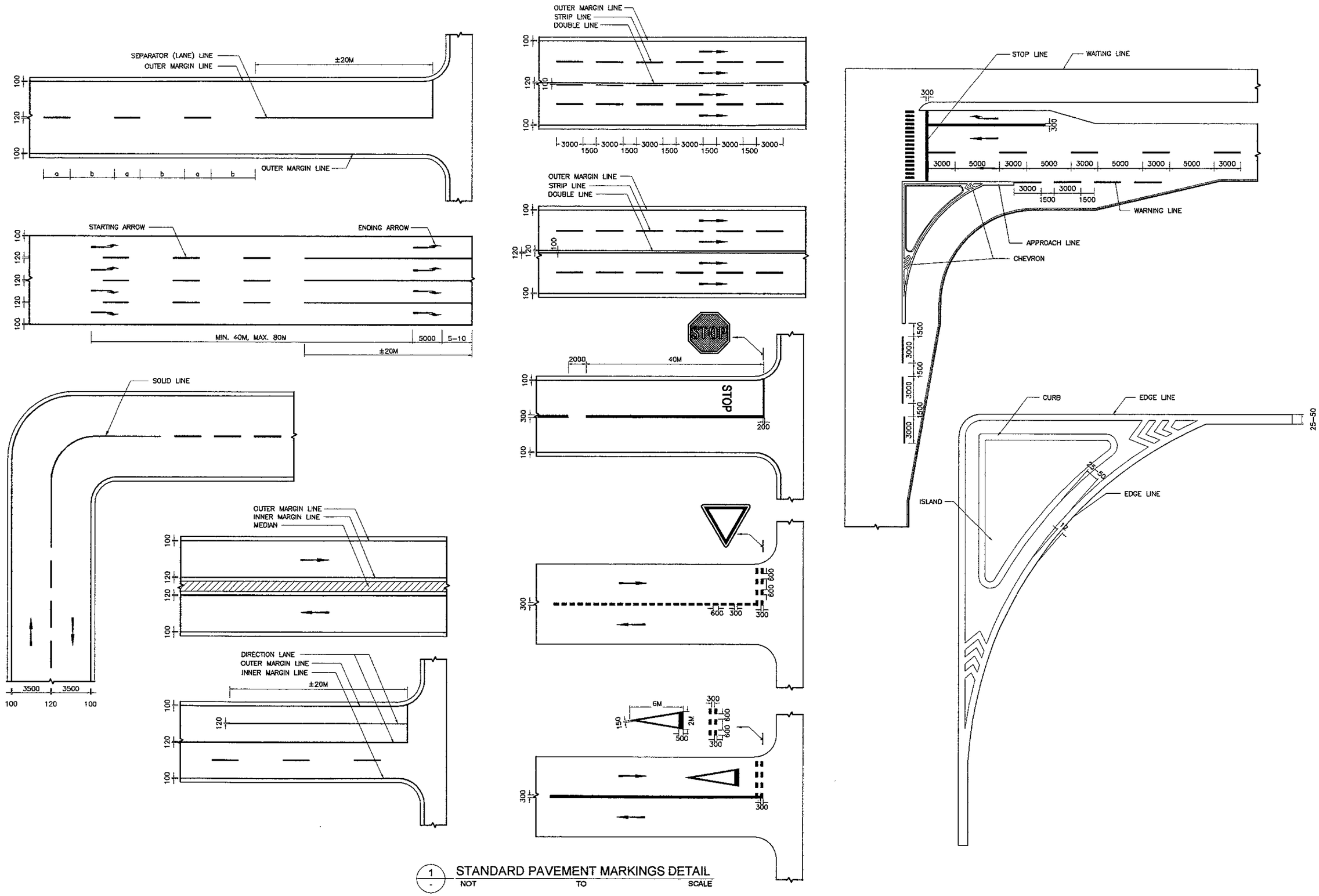

1 STANDARD PAVEMENT MARKINGS DETAIL
NOT TO SCALE

JICA JAPAN INTERNATIONAL COOPERATION AGENCY / KEI KATAHIRA & ENGINEERS INTERNATIONAL	DESIGNED BY	CHECKED BY	SUBMITTED BY	REPUBLIC OF INDONESIA MINISTRY OF PUBLIC WORKS DIRECTORATE GENERAL OF HIGHWAYS	PROJECT AND LOCATION :	SCALE :	DRAWING TITLE :	DRAWING NO :
	Name: R. UENO	Name: T. OKUMURA	Name: M. KIUCHI		DETAILED DESIGN STUDY OF NORTH JAVA CORRIDOR FLYOVER PROJECT GEBANG FLYOVER - CONTRACT PACKAGE 2 (NAGREG - GEBANG) WEST JAVA PROVINCE	1 : 200	CHEVRON MARKING DETAILS (FLYOVER APPROACHES)	GTR-008
	Sign	Sign	Sign	APPROVED BY: Ir. HERRY VAZA M.Eng.Sc				SHEET NO :
	Date	Date	Date	NIP. : 110038400 — Sign / Date		FULL SIZE A3		08 / 26

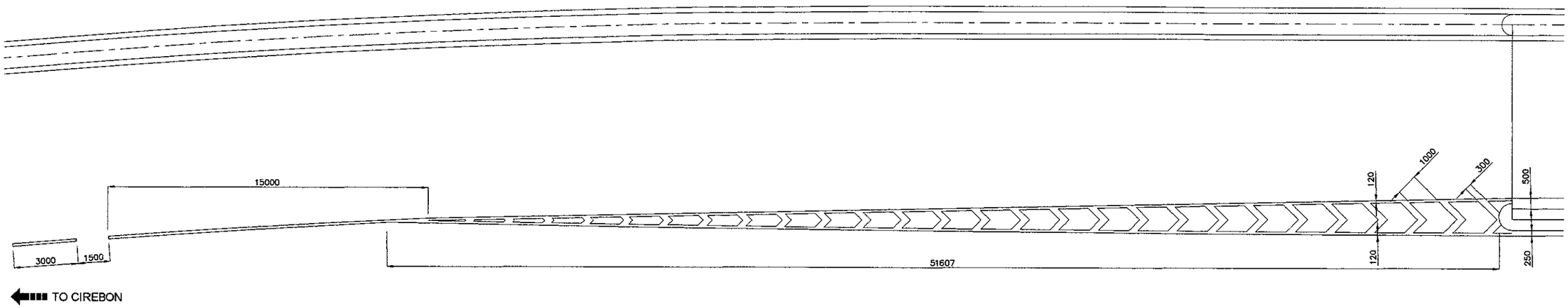

APPROACH 1

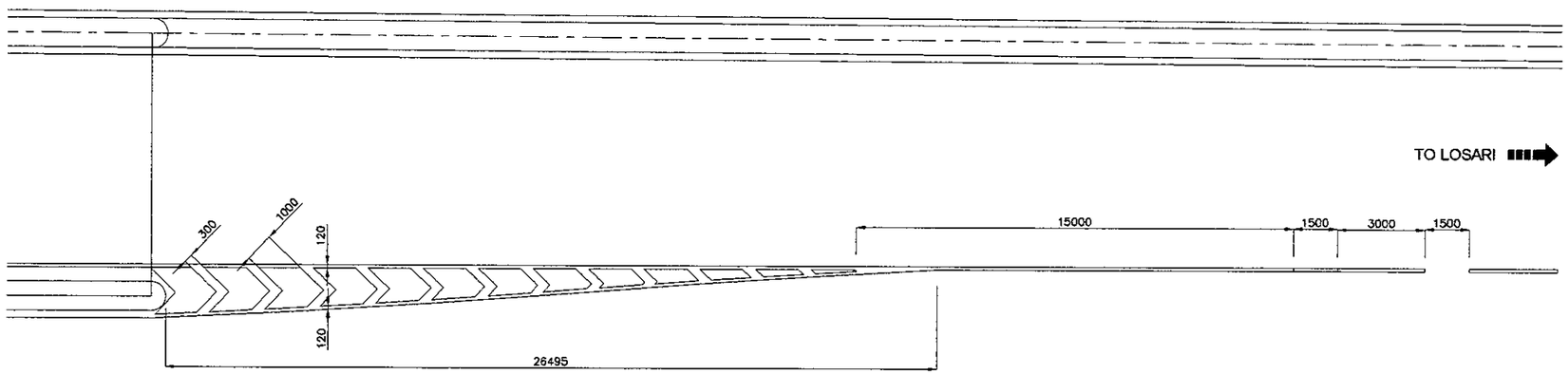

APPROACH 2

1 - CHEVRON MARKINGS AT FLYOVER APPROACHES
SCALE 1:200

JAPAN INTERNATIONAL COOPERATION AGENCY / KATAHIRA & ENGINEERS INTERNATIONAL	DESIGNED BY	CHECKED BY	SUBMITTED BY	REPUBLIC OF INDONESIA MINISTRY OF PUBLIC WORKS DIRECTORATE GENERAL OF HIGHWAYS	PROJECT AND LOCATION :	SCALE :	DRAWING TITLE :	DRAWING NO :
	Name: R. UENO	Name: T. OKUMURA	Name: M. KIUCHI		DETAILED DESIGN STUDY OF NORTH JAVA CORRIDOR FLYOVER PROJECT GEBANG FLYOVER - CONTRACT PACKAGE 2 (NAGREG - GEBANG) WEST JAVA PROVINCE	NTS	STANDARD TRAFFIC SIGNS 1 OF 4	GTR-009
	Sign	Sign	Sign	APPROVED BY: Ir. HERRY VAZA M.Eng.Sc NIP. : 110038400				SHEET NO :
	Date	Date	Date	Sign / Date		FULL SIZE A3		09 / 26

TABLE I. WARNING SIGNS

MINISTRY OF COMMUNICATION NO.KM.61 YEAR 1993

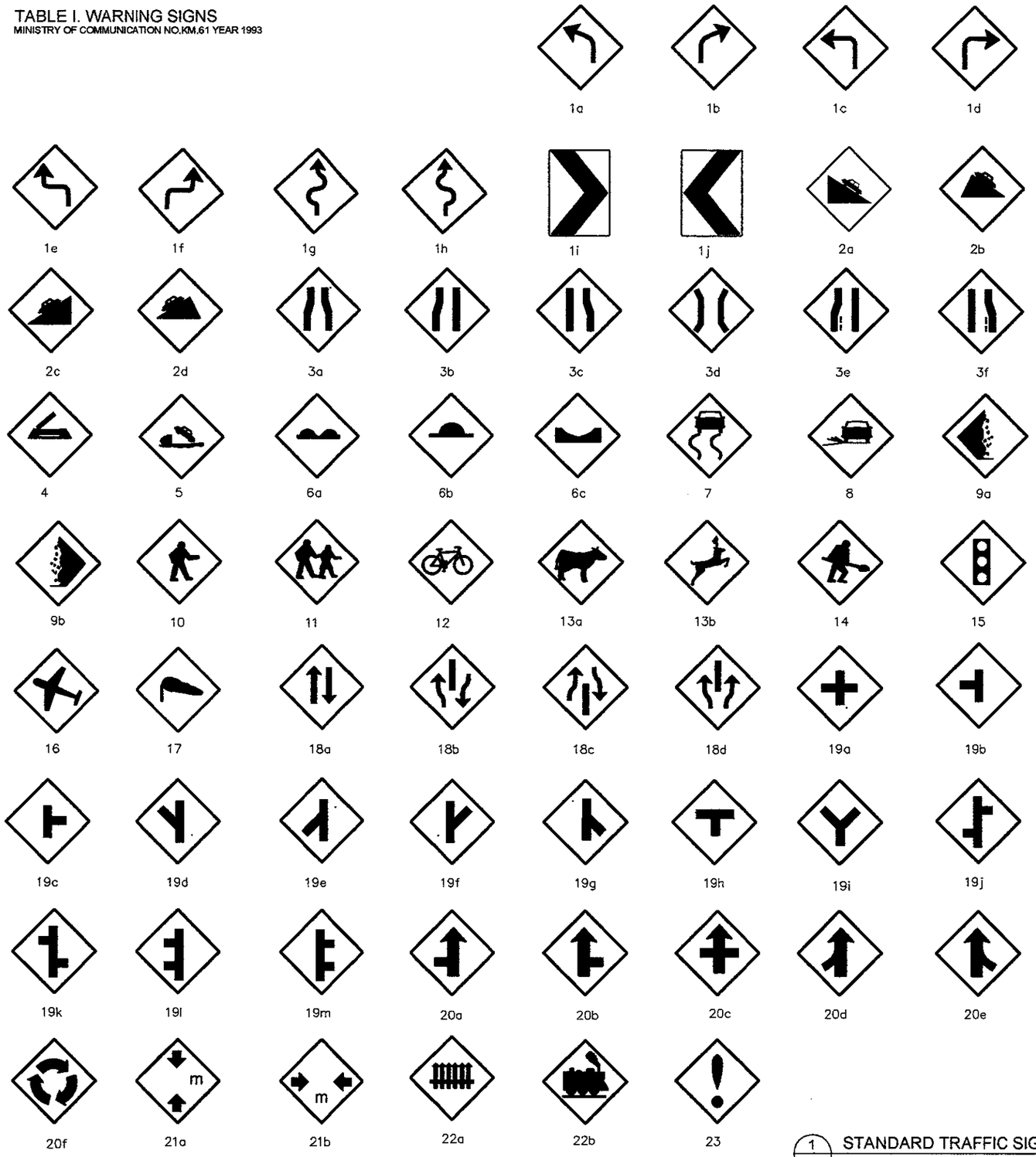

1a. LEFT CURVE
1b. RIGHT CURVE
1c. SHARP LEFT CURVE
1d. SHARP RIGHT CURVE
1e. DOUBLE CURVE, BEGIN WITH LEFT CURVE
1f. DOUBLE CURVE, BEGIN WITH RIGHT CURVE
1g. MANY CURVES, BEGIN WITH LEFT CURVE
1h. MANY CURVES, BEGIN WITH RIGHT CURVE
1i. RIGHT CURVE
1j. LEFT CURVE
2a. DOWN GRADE
2b. DOWN GRADE SHARP
2c. UP GRADE
2d. UP GRADE SHARP
3a. CHANGING OF ROAD WIDTH
3b. CHANGING OF ROAD WIDTH LEFT
3c. CHANGING OF ROAD WIDTH RIGHT
3d. CHANGING OF ROAD WIDTH AT BRIDGE
3e. MERGER OF LEFT LANE TO RIGHT LANE
3f. MERGER OF RIGHT LANE TO LEFT LANE
4. LIFT BRIDGE
5. WHARF
6a. CONDITIONAL OF ROAD PROFILE IS NOT EVEN
6b. CONDITIONAL OF ROAD PROFILE IS CONVEX
6c. CONDITIONAL OF ROAD PROFILE IS CONCAVE
7. SLIPPERY
8. MANY GRAVEL'S
9a. FALLING ROCKS FROM LEFT
9b. FALLING ROCKS FROM RIGHT
10. WATCH FOR PEDESTRIAN
11. WATCH FOR CHILDREN
12. WATCH FOR BICYCLE
13a. WATCH FOR CATTLE
13b. WATCH FOR WILD LIFE
14. ROAD WORK
15. TRAFFIC CONTROL LIGHTS
16. PLANE TRAJECTORY
17. WIND FROM SIDE COURSE
18a. TWO WAY TRAFFIC
18b. BEGINNING OF SEPARATOR ON TWO WAY TRAFFIC
18c. END OF SEPARATOR ON TWO WAY TRAFFIC
18d. BEGINNING OF SEPARATOR ON ONE WAY TRAFFIC

19a. CROSS ROAD
19b. INTERSECTION FROM LEFT DIRECTION TRAFFIC
19c. INTERSECTION FROM RIGHT DIRECTION TRAFFIC
19d. INTERSECTION FROM FRONT LEFT DIRECTION TRAFFIC
19e. INTERSECTION FROM BACK LEFT DIRECTION TRAFFIC
19f. INTERSECTION FROM FRONT RIGHT DIRECTION TRAFFIC
19g. INTERSECTION FROM BACK RIGHT DIRECTION TRAFFIC
19h. T–TYPE INTERSECTION
19i. Y–TYPE INTERSECTION
19j. TWO INTERSECTION, BEGIN FROM LEFT DIRECTION TRAFFIC AND THEN RIGHT DIRECTION TRAFFIC
19k. TWO INTERSECTION, BEGIN FROM RIGHT DIRECTION TRAFFIC AND THEN LEFT DIRECTION TRAFFIC
19l. TWO INTERSECTION, BOTH OF THEM FROM LEFT DIRECTION TRAFFIC
19m. TWO INTERSECTION, BOTH OF THEM FROM RIGHT DIRECTION TRAFFIC
20a. CROSSROAD WITH PRIORITY
20b. INTERSECTION FROM LEFT DIRECTION TRAFFIC WITH PRIORITY
20c. INTERSECTION FROM RIGHT DIRECTION TRAFFIC WITH PRIORITY
20d. INTERSECTION FROM BACK LEFT DIRECTION TRAFFIC WITH PRIORITY
20e. NTERSECTION FROM BACK RIGHT DIRECTION TRAFFIC WITH PRIORITY
21a. HEIGHT OF FREE SPACE
21b. WIDTH OF FREE SPACE
22a. RAIL ROAD CROSSING WITH GATES
22b. RAIL ROAD GROSSING WITHOUT GATES
23. LOOK OUT

COLOR LEGEND :

YELLOW

BLACK

NOTE :

STANDARD TRAFFIC ROAD SIGNS SHOULD CONFORM WITH THE " DINAS PERHUBUNGAN LALU LINTAS DAN ANGKUTAN JALAN SETEMPAT "

1 / - STANDARD TRAFFIC SIGNS
NOT TO SCALE

JAPAN INTERNATIONAL COOPERATION AGENCY KATAHIRA & ENGINEERS INTERNATIONAL	DESIGNED BY	CHECKED BY	SUBMITTED BY	REPUBLIC OF INDONESIA MINISTRY OF PUBLIC WORKS DIRECTORATE GENERAL OF HIGHWAYS	PROJECT AND LOCATION :	SCALE :	DRAWING TITLE :	DRAWING NO :
	Name: R. UENO	Name: T. OKUMURA	Name: M. KIUCHI		DETAILED DESIGN STUDY OF NORTH JAVA CORRIDOR FLYOVER PROJECT GEBANG FLYOVER - CONTRACT PACKAGE 2 (NAGREG - GEBANG) WEST JAVA PROVINCE	NTS	STANDARD TRAFFIC SIGNS 2 OF 4	GTR-010
	Sign	Sign	Sign	APPROVED BY: Ir. HERRY VAZA M,Eng.Sc NIP. : 110038400				SHEET NO :
	Date	Date	Date	Sign / Date		FULL SIZE A3		10 / 26

TABLE II A. PROHIBITION SIGN

MINISTRY OF COMMUNICATION NO.KM.61 YEAR 1993

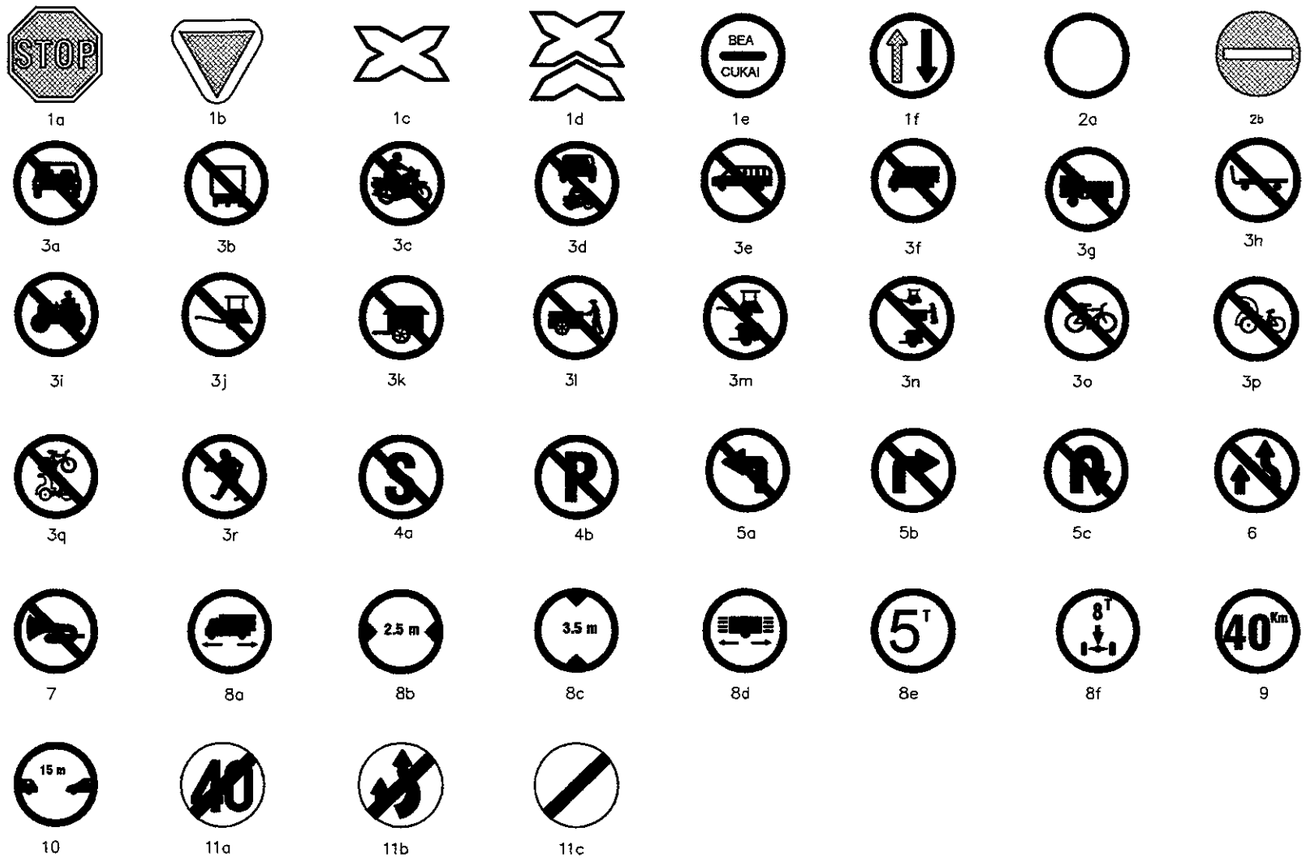

1a. STOP

1b. GIVE WAY, YIELD

1c. ONE LANERAIL ROAD CROSSING

1d. TWO LANERAIL ROAD CROSSING

1e. STOP FOR INVESTIGATION CONCERN WITH 'BEA CUKAI'

1f. PRIORITY FOR VEHICLES FROM BOTH DIRECTION

2a. NO ENTRY FOR ALL VEHICLES FROM BOTH DIRECTIONS

2b. NO ENTRY FOR ALL VEHICLES

3a. NO ENTRY FOR FOUR WHEEL MOTORIZED VEHICLES

3b. NO ENTRY FOR THREE WHEEL MOTORIZED VEHICLES

3c. NO ENTRY FOR TWO WHEEL MOTORIZED VEHICLES

3d. NO ENTRY FOR ALL MOTORIZED VEHICLES

3e. NO ENTRY FOR BUS

3f. NO ENTRY FOR TRUCK

3g. NO ENTRY FOR MOTORIZED VEHICLE WITH PULL A CART

3h. NO ENTRY FOR TRAILER

3i. NO ENTRY FOR ROLLER

3j. NO ENTRY FOR CARRIAGE

3k. NO ENTRY FOR OXCART

3l. NO ENTRY FOR PUSHCART

3m. NO ENTRY FOR CARRIAGE AND OXCART

3n. NO ENTRY FOR CARRIAGE, PUSHCART AND OXCART

3o. NO ENTRY FOR BICYCLE

3p. NO ENTRY FOR TRICYCLE

3q. NO ENTRY FOR BICYCLE AND TRICYCLE

3r. NO ENTRY FOR PEDESTRIAN

4a. NO STOPPING

4b. NO PARKING

5a. TURN TO LEFT PROHIBITION (NO LEFT TURN)

5b. TURN TO RIGHT PROHIBITION (NO RIGHT TURN)

5c. CHANGE OF COURSE PROHIBITION (NO U-TURN)

6. NO OVERTAKE

7. NO HORN

8a. LENGTH LIMIT FOR MOTORIZED VEHICLE

8b. WIDTH LIMIT

8c. HEIGHT LIMIT

8d. LENGHT LIMIT FOR CART

8e. WEIGHT LIMIT FOR CART

8f. WEIGHT LIMIT

9. SPEED LIMIT

10. DISTANCE LIMIT

11a. END OF SPEED LIMIT AREA

11b. END OF NO OVERTAKE AREA

11c. END OF PROHIBITION AREA

COLOR LEGEND :

- YELLOW
- RED
- BLACK
- BLUE

NOTE :

STANDARD TRAFFIC ROAD SIGNS SHOULD CONFORM WITH THE " DINAS PERHUBUNGAN LALU LINTAS DAN ANGKUTAN JALAN SETEMPAT "

TABLE II B. INSTRUCTION SIGN

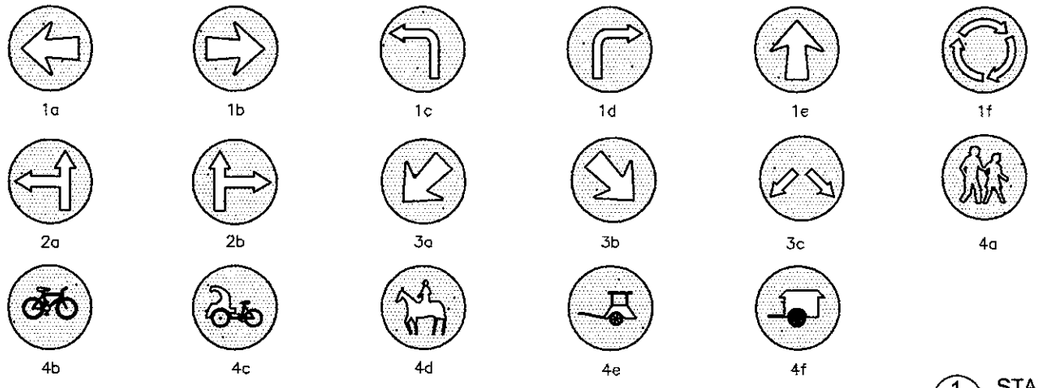

1a. INDICATION OF DIRECTION TO LEFT

1b. INDICATION OF DIRECTION TO RIGHT

1c. TURNING INDICATION TO LEFT

1d. TURNING INDICATION TO RIGHT

1e. MUST BE RUN IN A STRAIGHT LINE

1f. MUST BE FOLLOW THE ARROW POINTS WHILE ON TRAFFIC ROTARY

2a. MUST BE FOLLOW ONE OF THE ARROW POINTS

2b. MUST BE FOLLOW ONE OF THE ARROW POINTS

3a. MUST PASS THIS LANE

3b. MUST PASS THIS LANE

3c. MUST PASS IN ONE OF THESE LANES

4a. FOR PEDESTRIANS

4b. FOR BICYCLES

4c. FOR TRICYCLES

4d. FOR HORSE

4e. FOR CARRIAGE

4f. FOR OXCART

1 - STANDARD TRAFFIC SIGNS
NOT TO SCALE

JAPAN INTERNATIONAL COOPERATION AGENCY / KATAHIRA & ENGINEERS INTERNATIONAL	DESIGNED BY	CHECKED BY	SUBMITTED BY	REPUBLIC OF INDONESIA MINISTRY OF PUBLIC WORKS DIRECTORATE GENERAL OF HIGHWAYS	PROJECT AND LOCATION :	SCALE :	DRAWING TITLE :	DRAWING NO :
	Name: R. UENO	Name: T. OKUMURA	Name: M. KIUCHI		DETAILED DESIGN STUDY OF NORTH JAVA CORRIDOR FLYOVER PROJECT GEBANG FLYOVER - CONTRACT PACKAGE 2 (NAGREG - GEBANG) WEST JAVA PROVINCE	NTS	STANDARD TRAFFIC SIGNS 3 OF 4	GTR-011
	Sign	Sign	Sign	APPROVED BY: Ir. HERRY VAZA M,Eng.Sc NIP. : 110038400				SHEET NO :
	Date	Date	Date	Sign / Date		FULL SIZE A3		11 / 26

TABLE III. GUIDE SIGNS

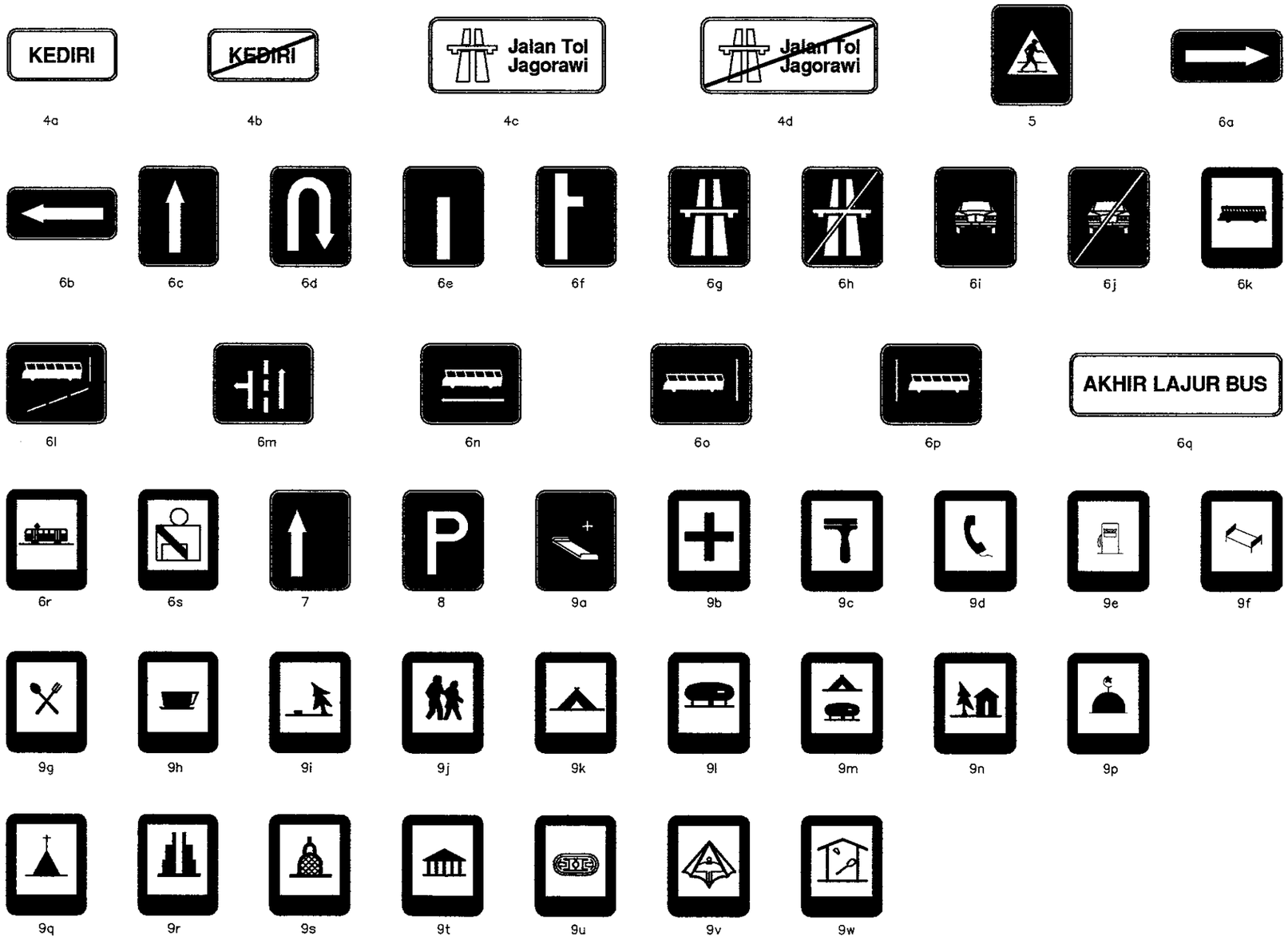

4a. INCOMING BORDER OF KEDIRI CITY
4b. OUT GOING BORDER OF KEDIRI CITY
4c. BEGINNING OF TOLL ROAD
4d. END OF TOLL ROAD
5. PEDESTRIAN CROSSING PLACE
6a. ONE WAY RIGHT
6b. ONE WAY LEFT
6c. STRAIGHT ONE WAY
6d. U TURN
6e. DEAD END
6f. DEAD END DIRECTION RIGHT WAY
6g. TOLL ROAD
6h. END OF TOLL ROAD
6i. VEHICLE ONLY
6j. END OF VEHICLE
6k. BUS STOP
6l. START OF BUS LINE
6m. OTHER TRAFFIC
6n. SPECIAL BUS LINE
6o. ONE DIRECTION BUS LINE
6p. TWO DIRECTION BUS LINE
6q. END OF BUS LINE
6r. FIXED LANE HALT
6s. USED SAFETY BELT
7. PRIORITY GIVEN TO THE COMING TRAFFIC
8. PARKING AREA

9a. HOSPITAL
9b. FIRST AID OFFICE
9c. VEHICLE WORK SHOP
9d. PUBLIC TELEPHONE
9e. GAS / FUEL STATION
9f. HOTEL AND MOTEL
9g. RESTAURANT
9h. CAFE
9i. RECREATIONAL AREA
9j. PASSING ZONE
9k. CAMPING AREA
9l. REST AREA
9m. CARAVAN AREA
9n. BUNGALOW / VILLE
9p. MOSQUE
9q. CHURCH
9r. HINDUS TEMPLE
9s. BUDHIST TEMPLE
9t. MUSEUM
9u. OPEN SPORT STADIUM
9v. GLIDING AREA
9w. SPORT HALL

COLOR LEGEND :

RED
BLACK
BLUE

NOTE :

STANDARD TRAFFIC ROAD SIGNS SHOULD CONFORM WITH THE " DINAS PERHUBUNGAN LALU LINTAS DAN ANGKUTAN JALAN SETEMPAT "

1 - STANDARD TRAFFIC SIGNS
NOT TO SCALE

JAPAN INTERNATIONAL COOPERATION AGENCY KATAHIRA & ENGINEERS INTERNATIONAL	DESIGNED BY	CHECKED BY	SUBMITTED BY	REPUBLIC OF INDONESIA MINISTRY OF PUBLIC WORKS DIRECTORATE GENERAL OF HIGHWAYS	PROJECT AND LOCATION :	SCALE :	DRAWING TITLE :	DRAWING NO :
	Name R. UENO	Name T. OKUMURA	Name M. KIUCHI		DETAILED DESIGN STUDY OF NORTH JAVA CORRIDOR FLYOVER PROJECT GEBANG FLYOVER - CONTRACT PACKAGE 2 (NAGREG - GEBANG) WEST JAVA PROVINCE	NTS	STANDARD TRAFFIC SIGNS 4 OF 4	GTR-012
	Sign	Sign	Sign	APPROVED BY Ir. HERRY VAZA M,Eng.Sc Sign				SHEET NO :
	Date	Date	Date	NIP. : 110038400 Date		FULL SIZE A3		12 / 26

ADDITIONAL TRAFFIC SIGNS
(FOR TRAFFIC IMPLEMENTATION)

S1-1

W16-7PL

S4-4

S4-5

S4-5a

R3-5L

R3-5R

R3-6L

R3-6R

W20-7a

W4-3L

W4-3R

W2-16

S1-1	SCHOOL
S4-5	REDUCED SPEED (SCHOOL) ZONE AHEAD
S4-5a	REDUCED SPEED (SCHOOL) ZONE AHEAD
R3-5L	MANDATORY MOVEMENT LANE CONTROL (LEFT)
R3-5R	MANDATORY MOVEMENT LANE CONTROL (RIGHT)
R3-6L	OPTIONAL MOVEMENT LANE CONTROL (LEFT)
R3-6R	OPTIONAL MOVEMENT LANE CONTROL (RIGHT)
W20-7a	FLAGGER
W2-16	DISTANCE
W4-3L	ADDED LINE (LEFT)
W4-3R	ADDED LINE (RIGHT)
W16-7PL	LEFT DIAGONAL ARROW PLAQUE

COLOR LEGEND :

- YELLOW
- RED
- BLACK
- BLUE

NOTE :

STANDARD TRAFFIC WITH ROAD SIGNS
SHOULD CONFORM WITH THE "
DINAS PERHUBUNGAN LALU LINTAS
DAN ANGKUTAN JALAN SETEMPAT

1 - STANDARD TRAFFIC SIGNS
NOT TO SCALE

JAPAN INTERNATIONAL COOPERATION AGENCY KATAHIRA & ENGINEERS INTERNATIONAL	DESIGNED BY	CHECKED BY	SUBMITTED BY	REPUBLIC OF INDONESIA MINISTRY OF PUBLIC WORKS DIRECTORATE GENERAL OF HIGHWAYS	PROJECT AND LOCATION :	SCALE :	DRAWING TITLE :	DRAWING NO :
	Name R. UENO	Name T. OKUMURA	Name M. KIUCHI		DETAILED DESIGN STUDY OF NORTH JAVA CORRIDOR FLYOVER PROJECT GEBANG FLYOVER - CONTRACT PACKAGE 2 (NAGREG - GEBANG) WEST JAVA PROVINCE	1 : 75	OVERHEAD GUIDE SIGNS	GTR-013
	Sign	Sign	Sign	APPROVED BY Ir. HERRY VAZA M,Eng.Sc NIP. : 110038400 Sign				SHEET NO :
	Date	Date	Date	Date		FULL SIZE A3		13 / 26

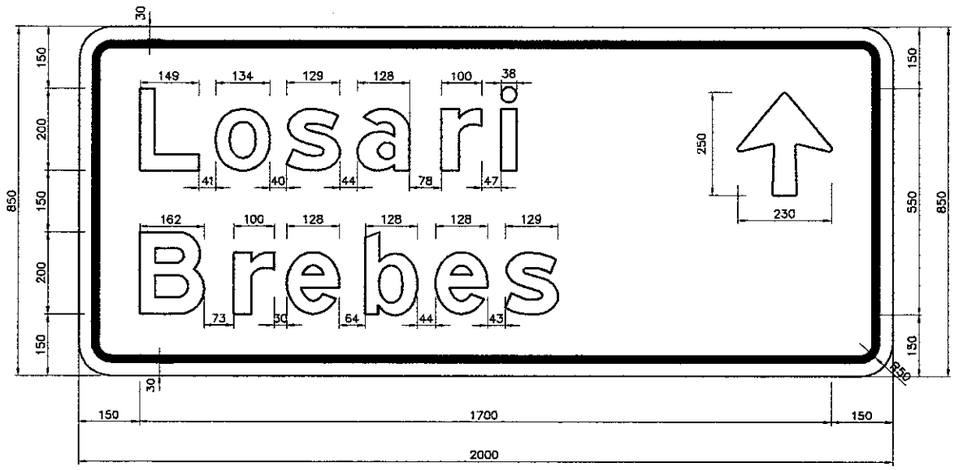

GS - 2

GS - 4

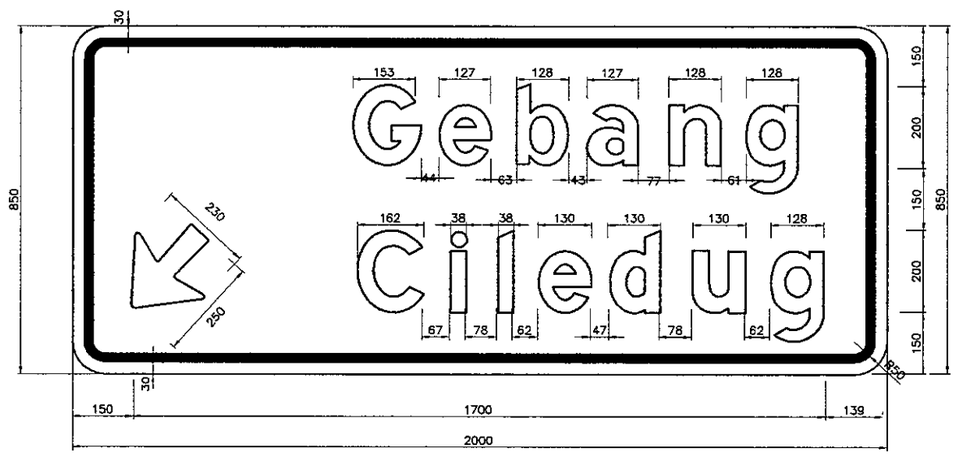

GS - 1

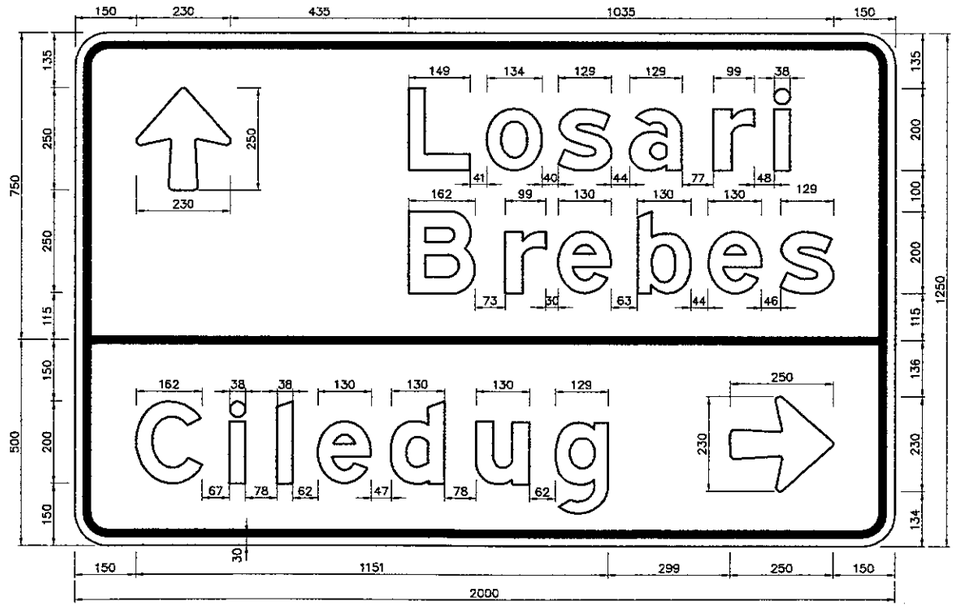

GS - 3

NOTES :

USED LETTER : REFER TO THE STANDARD ALPHABETS FOR HIGHWAY SIGNS AND PAVEMENT MARKINGS, FHWA 1977
: USED TYPE UPPERCASE E(M) 200, LOWERCASE LC 150

USED COLOUR :
- BACKGROUND : GREEN (REFLECTORIZED) ENGINEERING GRADE (EG)
- LETTER : WHITE (REFLECTORIZED) HIGH INTENSITY
- ARROW : WHITE (REFLECTORIZED) HIGH INTENSITY
- BORDER LINE : WHITE BOLD 30 MM (REFLECTORIZED) HIGH INTENSITY
- CORNER RADIUS : 50 MM

1 / - OVERHEAD GUIDE SIGNS
SCALE 1:75

JAPAN INTERNATIONAL COOPERATION AGENCY KATAHIRA & ENGINEERS INTERNATIONAL	DESIGNED BY	CHECKED BY	SUBMITTED BY	REPUBLIC OF INDONESIA MINISTRY OF PUBLIC WORKS DIRECTORATE GENERAL OF HIGHWAYS	PROJECT AND LOCATION :	SCALE :	DRAWING TITLE :	DRAWING NO :
	Name R. UENO	Name T. OKUMURA	Name M. KIUCHI		DETAILED DESIGN STUDY OF NORTH JAVA CORRIDOR FLYOVER PROJECT GEBANG FLYOVER - CONTRACT PACKAGE 2 (NAGREG - GEBANG) WEST JAVA PROVINCE	1 : 50	ROAD SIGN AND MOUNTING DETAILS	GTR-014
	Sign	Sign	Sign	APPROVED BY Ir. HERRY VAZA M,Eng.Sc Sign NIP. : 110038400 Date		FULL SIZE A3		SHEET NO : 14 / 26
	Date	Date	Date					

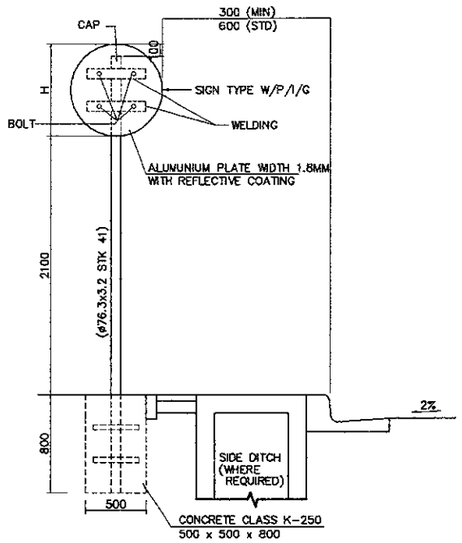

1 TYPE - A
SCALE 1:50

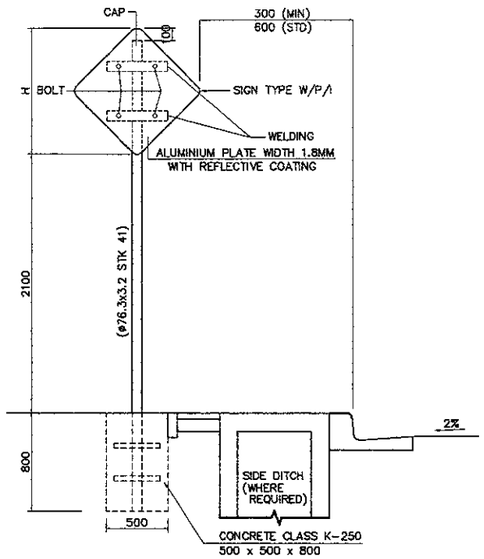

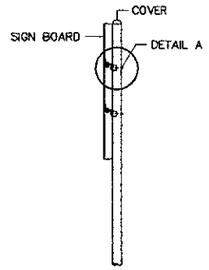

7 TYPICAL INSTALLATION OF SIGN AT STEEL POLE
NOT TO SCALE

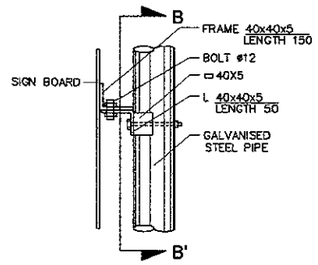

8 DETAIL A
NTS

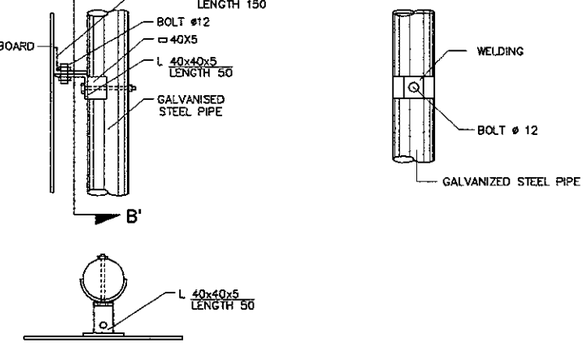

9 SEC. B-B'
NTS

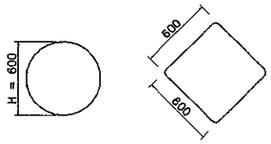

6 DIMENSIONS OF SIGN
SCALE 1:50

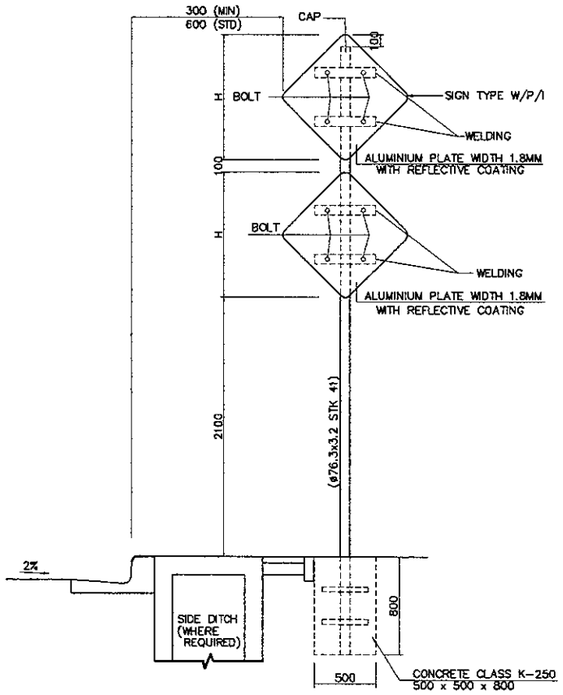

2 TYPE - B
SCALE 1:50

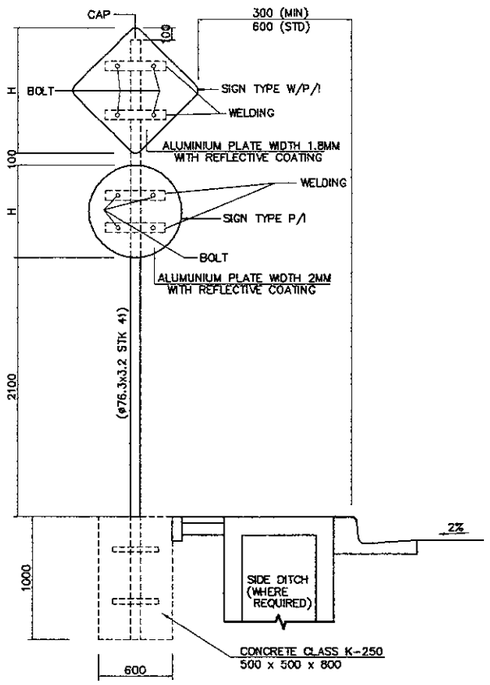

3 TYPE - C
SCALE 1:50

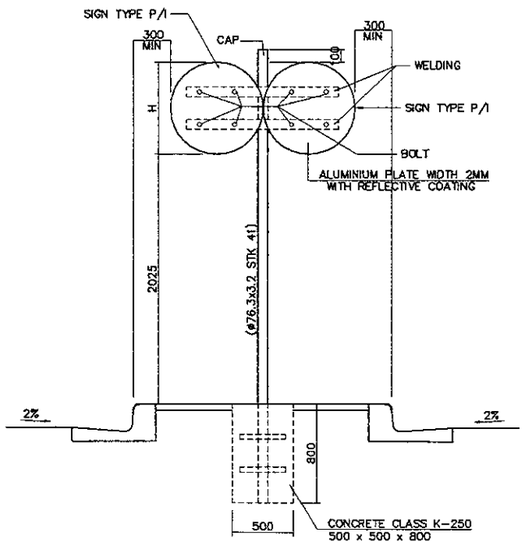

4 TYPE - D
SCALE 1:50

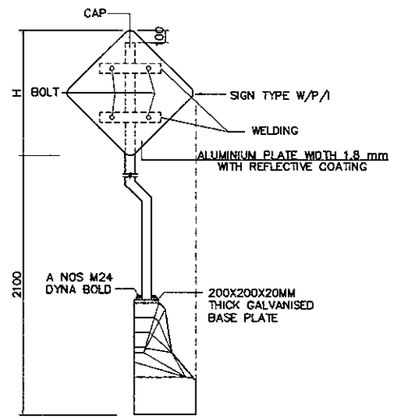

5 TYPE - E
SCALE 1:50

1. ALL DIMENSIONS ARE IN MILLIMETERS UNLESS OTHERWISE SHOWN
2. DETAILS SHALL BE IN ACCORDANCE WITH SK MEN-HUB NO. 61 TAHUN 1993
3. ALUMINIUM PLATE WITH REFLECTIVE SHEETING (AASHTO M 268) SHALL BE USED.
4. UNLESS OTHERWISE INSTRUCTED BY THE ENGINEER, THE THICKNESS OF ALUMINIUM PLATE SHALL BE 2MM.
5. DETAILS OF CLAMPS SHALL BE APPROVED BY THE ENGINEER.
6. LOCATION OF SIGNS AND EACH TYPE OF SIGNS SHALL BE AS DIRECTED AND APPROVED BY THE ENGINEER

JAPAN INTERNATIONAL COOPERATION AGENCY KATAHIRA & ENGINEERS INTERNATIONAL	DESIGNED BY	CHECKED BY	SUBMITTED BY	REPUBLIC OF INDONESIA MINISTRY OF PUBLIC WORKS DIRECTORATE GENERAL OF HIGHWAYS	PROJECT AND LOCATION :	SCALE :	DRAWING TITLE :	DRAWING NO :
	Name R. UENO	Name T. OKUMURA	Name M. KIUCHI		DETAILED DESIGN STUDY OF NORTH JAVA CORRIDOR FLYOVER PROJECT GEBANG FLYOVER - CONTRACT PACKAGE 2 (NAGREG - GEBANG) WEST JAVA PROVINCE	1 : 400 1 : 1000	OVERHEAD SIGN TRUSS STRUCTURAL FRAME DETAIL 1 OF 2	GTR-015
	Sign	Sign	Sign	APPROVED BY Ir. HERRY VAZA M,Eng.Sc / NIP. : 110038400 / Sign		FULL SIZE A3		SHEET NO :
	Date	Date	Date	Date				15 / 26

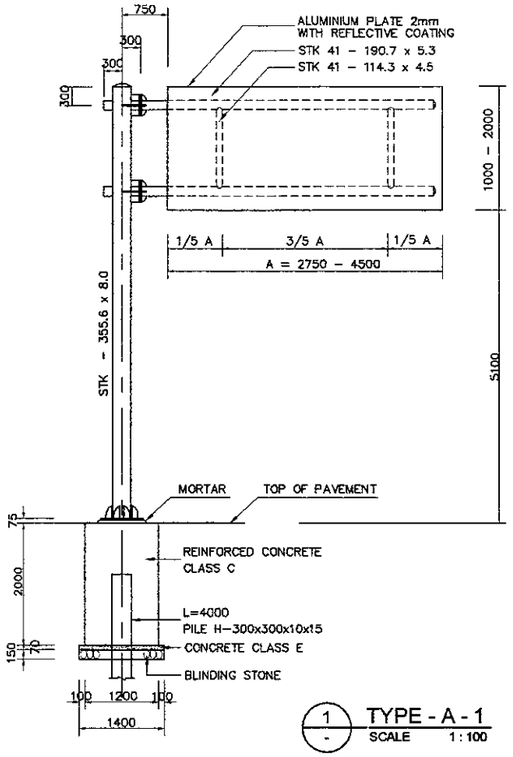

1 - TYPE - A - 1
SCALE 1 : 100

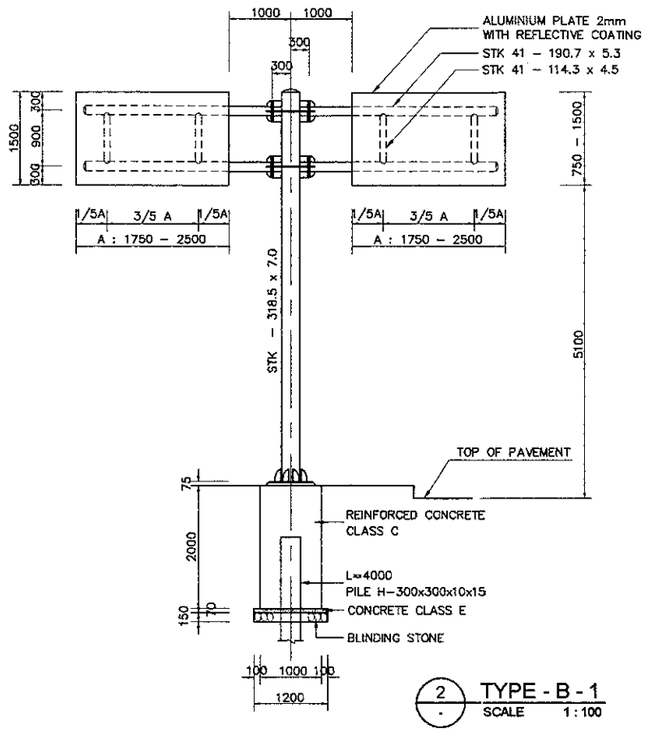

2 - TYPE - B - 1
SCALE 1 : 100

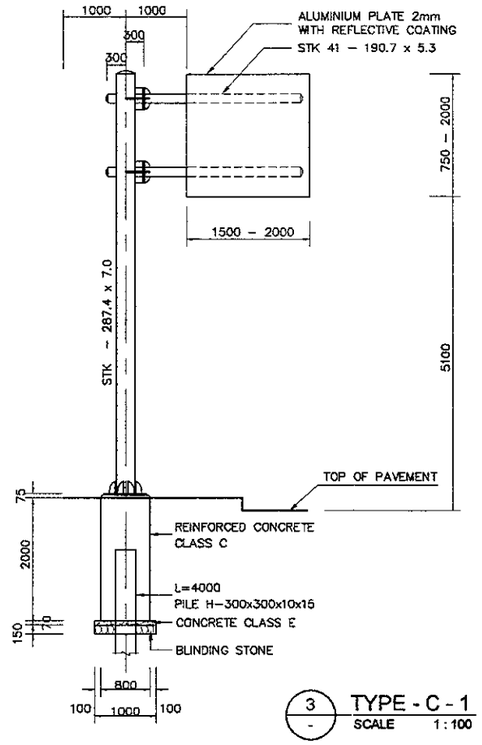

3 - TYPE - C - 1
SCALE 1 : 100

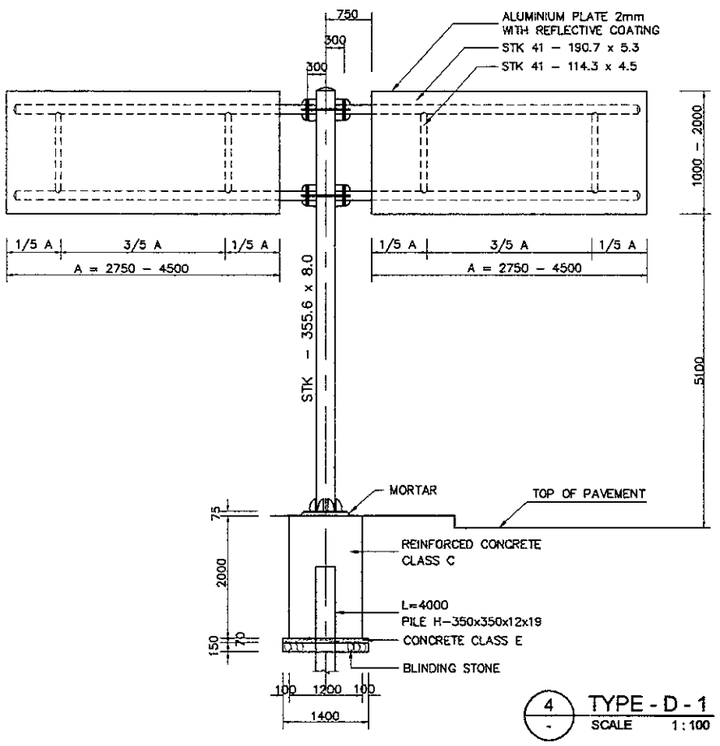

4 - TYPE - D - 1
SCALE 1 : 100

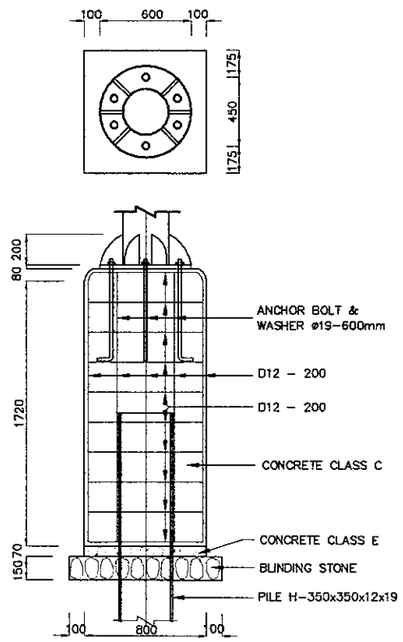

5 - DETAIL OF FOUNDATION
SCALE 1 : 400

NOTES :

1. ALL DIMENSIONS ARE IN MILLIMETERS UNLESS OTHERWISE SHOWN.
2. ALL STEEL MATERIALS EXCEPT STAINLESS STEEL SHALL BE GALVANIZED
3. "STK" INDICATES STEEL PIPE OR PILE.
4. EACH TYPE OF GUIDE SIGN SHALL BE PROVIDED AS SHOWN IN THE PLAN OR AS INSTRUCTED BY THE ENGINEER.
5. PILE FOUNDATION SHALL BE ADOPTED WHEN THE GUIDE SIGN IS INSTALLED ON THE EARTH WORK SECTION. PILE LENGTH ARE STANDARD AND MAY BE VARIED TO SITE CONDITIONS AS INSTRUCTED BY THE ENGINEER.
6. GUIDE SIGN WITH FRAMES LOCATED ON BRIDGES SHALL BE INSTALLED ON PEDESTALS.

JAPAN INTERNATIONAL COOPERATION AGENCY / KATAHIRA & ENGINEERS INTERNATIONAL	DESIGNED BY	CHECKED BY	SUBMITTED BY	REPUBLIC OF INDONESIA MINISTRY OF PUBLIC WORKS DIRECTORATE GENERAL OF HIGHWAYS	PROJECT AND LOCATION :	SCALE :	DRAWING TITLE :	DRAWING NO :
	Name: R. UENO	Name: T. OKUMURA	Name: M. KIUCHI		DETAILED DESIGN STUDY OF NORTH JAVA CORRIDOR FLYOVER PROJECT GEBANG FLYOVER - CONTRACT PACKAGE 2 (NAGREG - GEBANG) WEST JAVA PROVINCE	1 : 500	OVERHEAD SIGN TRUSS STRUCTURAL FRAME DETAIL 2 OF 2	GTR-016
	Sign	Sign	Sign	APPROVED BY: Ir. HERRY VAZA M,Eng.Sc NIP. : 110038400		FULL SIZE A3		SHEET NO : 16 / 26
	Date	Date	Date	Sign / Date				

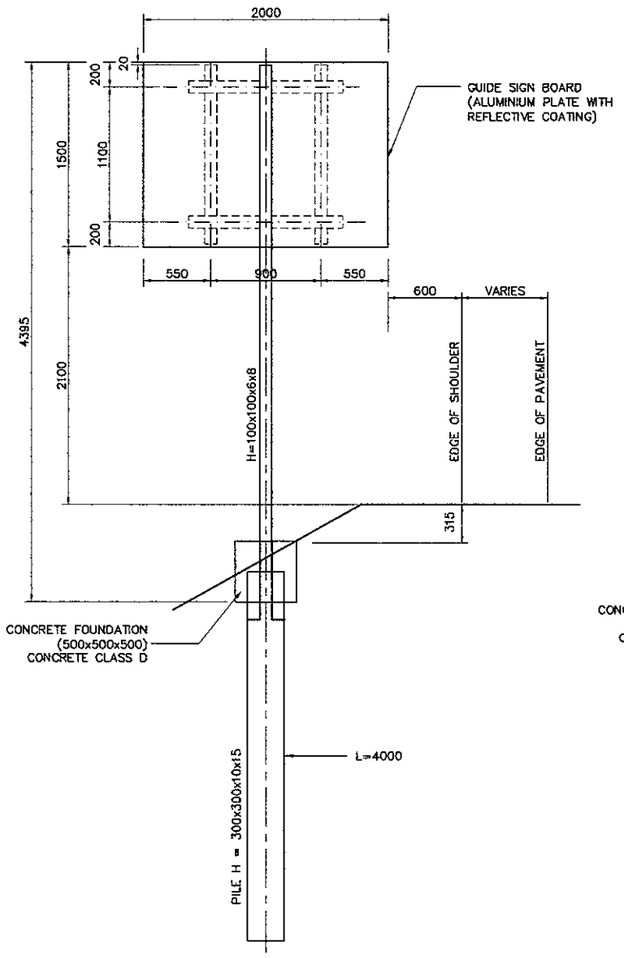

1 TYPE - E - 1
SCALE 1:500

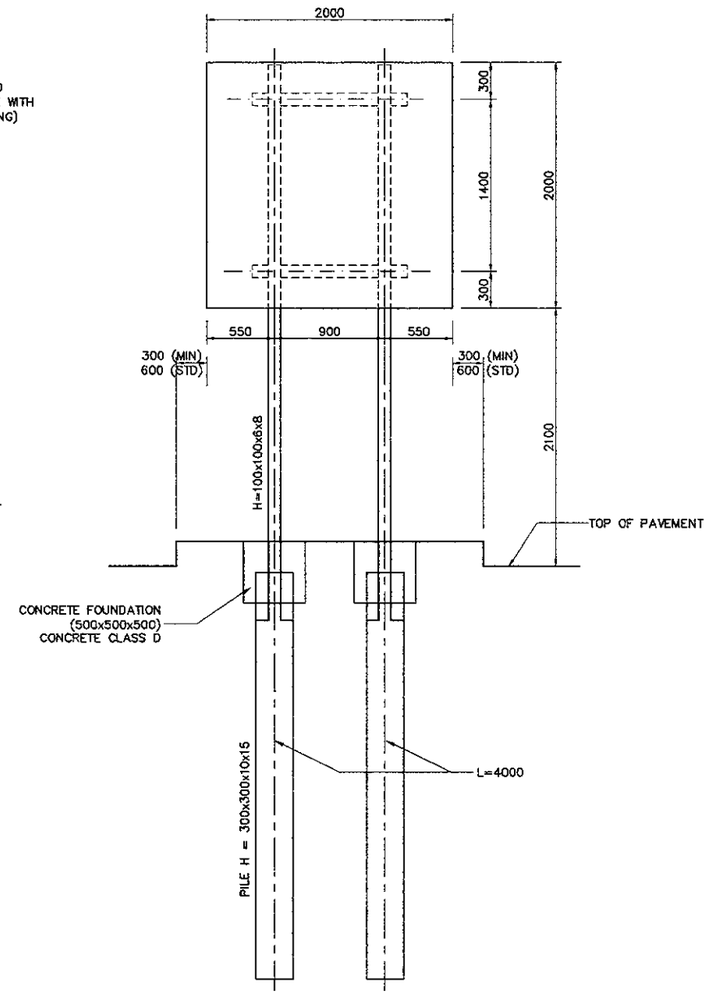

2 TYPE - F - 1
SCALE 1:500

NOTES :

1. ALL DIMENSIONS ARE IN MILLIMETERS UNLESS OTHERWISE SHOWN.
2. ALL STEEL MATERIALS EXCEPT STAINLESS STEEL SHALL BE GALVANIZED.
3. 'H' INDICATES STEEL H-BEAM.
4. "STK" INDICATES STEEL PIPE OR PILE.
5. EACH TYPE OF GUIDE SIGN SHALL BE INSTALLED AS SHOWN ON THE PLANS OR AS INSTRUCTED BY THE ENGINEER.
6. PILE FOUNDATION SHALL BE ADOPTED WHEN THE GUIDE SIGN IS INSTALLED ON THE EARTH WORK SECTION. PILE LENGTH ARE STANDARD AND MAY BE VARIED TO SITE CONDITIONS AS INSTRUCTED BY THE ENGINEER.
7. GUIDE SIGN WITH FRAMES LOCATED ON BRIDGES SHALL BE INSTALLED ON PEDESTALS.

JICA JAPAN INTERNATIONAL COOPERATION AGENCY / KEI KATAHIRA & ENGINEERS INTERNATIONAL	DESIGNED BY	CHECKED BY	SUBMITTED BY	REPUBLIC OF INDONESIA MINISTRY OF PUBLIC WORKS DIRECTORATE GENERAL OF HIGHWAYS	PROJECT AND LOCATION :	SCALE :	DRAWING TITLE :	DRAWING NO :
	Name R. UENO	Name T. OKUMURA	Name M. KIUCHI		DETAILED DESIGN STUDY OF NORTH JAVA CORRIDOR FLYOVER PROJECT GEBANG FLYOVER - CONTRACT PACKAGE 2 (NAGREG - GEBANG) WEST JAVA PROVINCE	AS SHOWN	CONTROL PANEL FOR TRAFFIC SIGNAL	GTR-017
	Sign	Sign	Sign	APPROVED BY ir. HERRY VAZA M,Eng.Sc NIP. : 110038400 Sign				SHEET NO :
	Date	Date	Date	Date		FULL SIZE A3		17 / 26

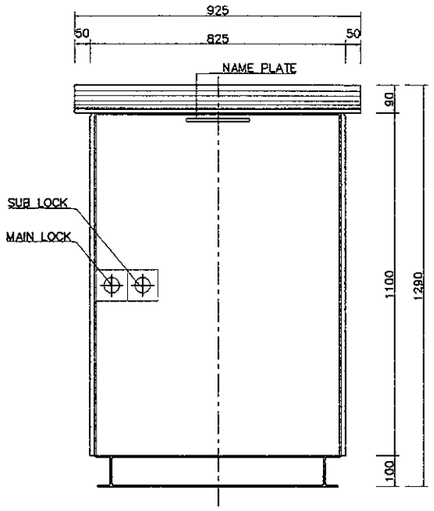

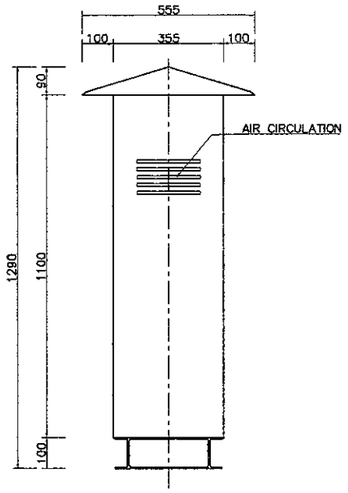

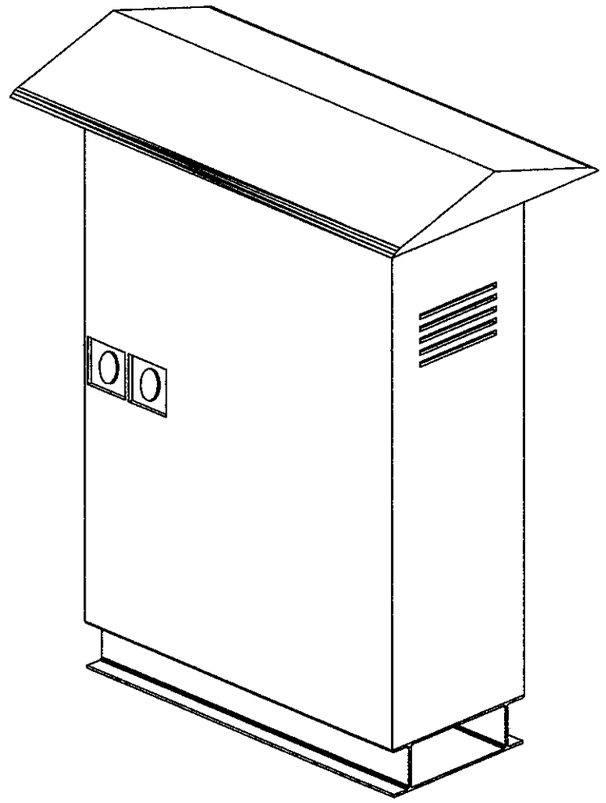

1 - FOUNDATION FOR PANEL "CP" FOR TRAFFIC SIGNAL
SCALE 1 : 20

3 - ISOMETRIC
NOT TO SCALE

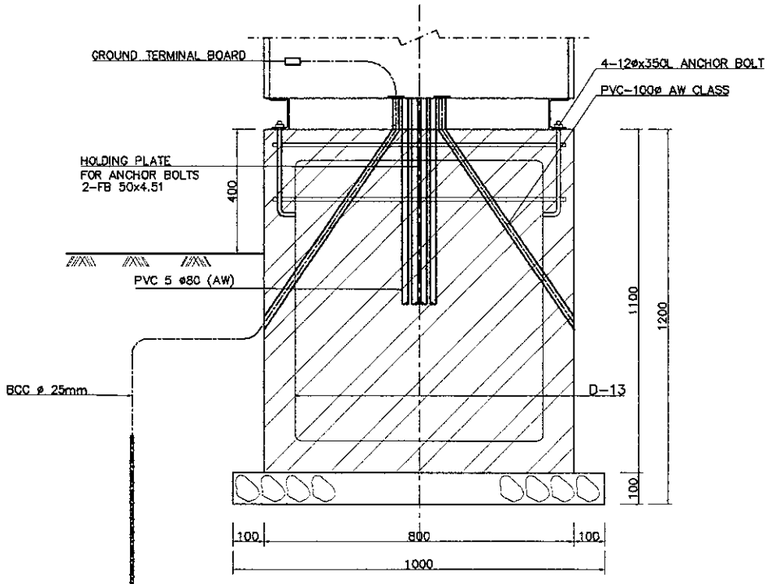

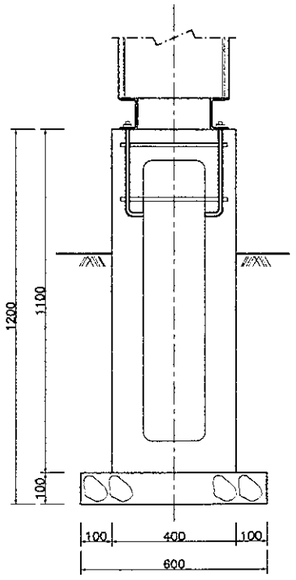

GROUNDING
ELECTRODE 1500mm X 10mm
POSITION OF UPPER END
MINIMUM 1200mm
FROM GROUND LEVEL
MAX. RESISTANCE 3 OHM

2 - FOUNDATION FOR PANEL "CP"
SCALE 1 : 10

NOTES :

1. DIMENSIONS ARE SHOWN IN MILLIMETER
2. ALL BOLTS AND NUTS SHALL COMPLY WITH JIS B1180 AND B1181 OR EQUIVALENT AS APPROVED BY THE ENGINEER.
3. ALL MATERIALS FOR PLATE ASSEMBLIES SHALL COMPLY WITH JIS G 3193 OR EQUIVALENT AS APPROVED BY THE ENGINEER.
4. LOCAL SWITCH AND PUSH BUTTON CONTROLLED BY LOCAL OPERATOR SHALL BE AS FOLLOWS
   a. MODE SELECTION SWITCH
      FOR AN AUTOMATIC MODE POSITION CONTROLLED BY TIMERS.
      FOR A MANUAL MODE POSITION CONTROLLED BY THE OPERATORS
      FOR A FLASHING MODE POSITION CONTROLLED BY THE TIMERS.
   b. PUSH BUTTON
      FOR CHANGING COLOUR OF THE SIGNALS.

JAPAN INTERNATIONAL COOPERATION AGENCY KATAHIRA & ENGINEERS INTERNATIONAL	DESIGNED BY	CHECKED BY	SUBMITTED BY	REPUBLIC OF INDONESIA MINISTRY OF PUBLIC WORKS DIRECTORATE GENERAL OF HIGHWAYS	PROJECT AND LOCATION :	SCALE :	DRAWING TITLE :	DRAWING NO :
	Name: R. UENO	Name: T. OKUMURA	Name: M. KIUCHI		DETAILED DESIGN STUDY OF NORTH JAVA CORRIDOR FLYOVER PROJECT GEBANG FLYOVER - CONTRACT PACKAGE 2 (NAGREG - GEBANG) WEST JAVA PROVINCE	1 : 20	TYPICAL DETAIL OF VEHICULAR AND PEDESTRIAN SIGNAL LIGHT	GTR-018
	Sign	Sign	Sign	APPROVED BY: Ir. HERRY VAZA M,Eng.Sc NIP. : 110038400				SHEET NO :
	Date	Date	Date	Sign / Date		FULL SIZE A3		18 / 26

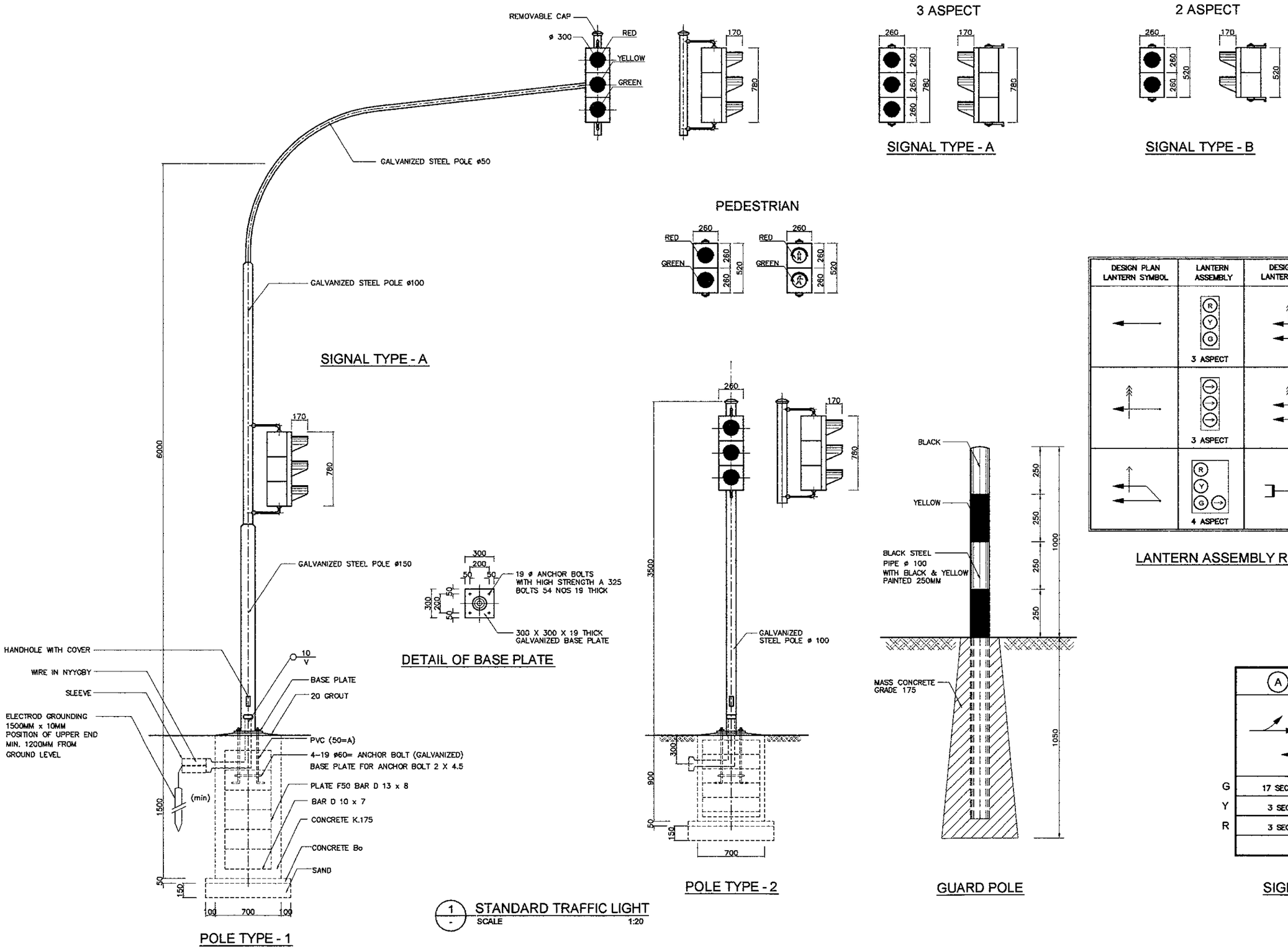

JICA JAPAN INTERNATIONAL COOPERATION AGENCY / KEI KATAHIRA & ENGINEERS INTERNATIONAL	DESIGNED BY: Name R. UENO, Sign, Date	CHECKED BY: Name T. OKUMURA, Sign, Date	SUBMITTED BY: Name M. KIUCHI, Sign, Date	REPUBLIC OF INDONESIA MINISTRY OF PUBLIC WORKS DIRECTORATE GENERAL OF HIGHWAYS — APPROVED BY Ir. HERRY VAZA M,Eng.Sc, NIP. : 110038400, Sign, Date	PROJECT AND LOCATION : DETAILED DESIGN STUDY OF NORTH JAVA CORRIDOR FLYOVER PROJECT GEBANG FLYOVER - CONTRACT PACKAGE 2 (NAGREG - GEBANG) WEST JAVA PROVINCE	SCALE : NTS, FULL SIZE A3	DRAWING TITLE : STANDARD TRAFFIC MANAGEMENT SIGNS DURING CONSTRUCTION	DRAWING NO : GTR-019	SHEET NO : 19 / 26

ROAD WORK
(TEMPORARY SIGNS)

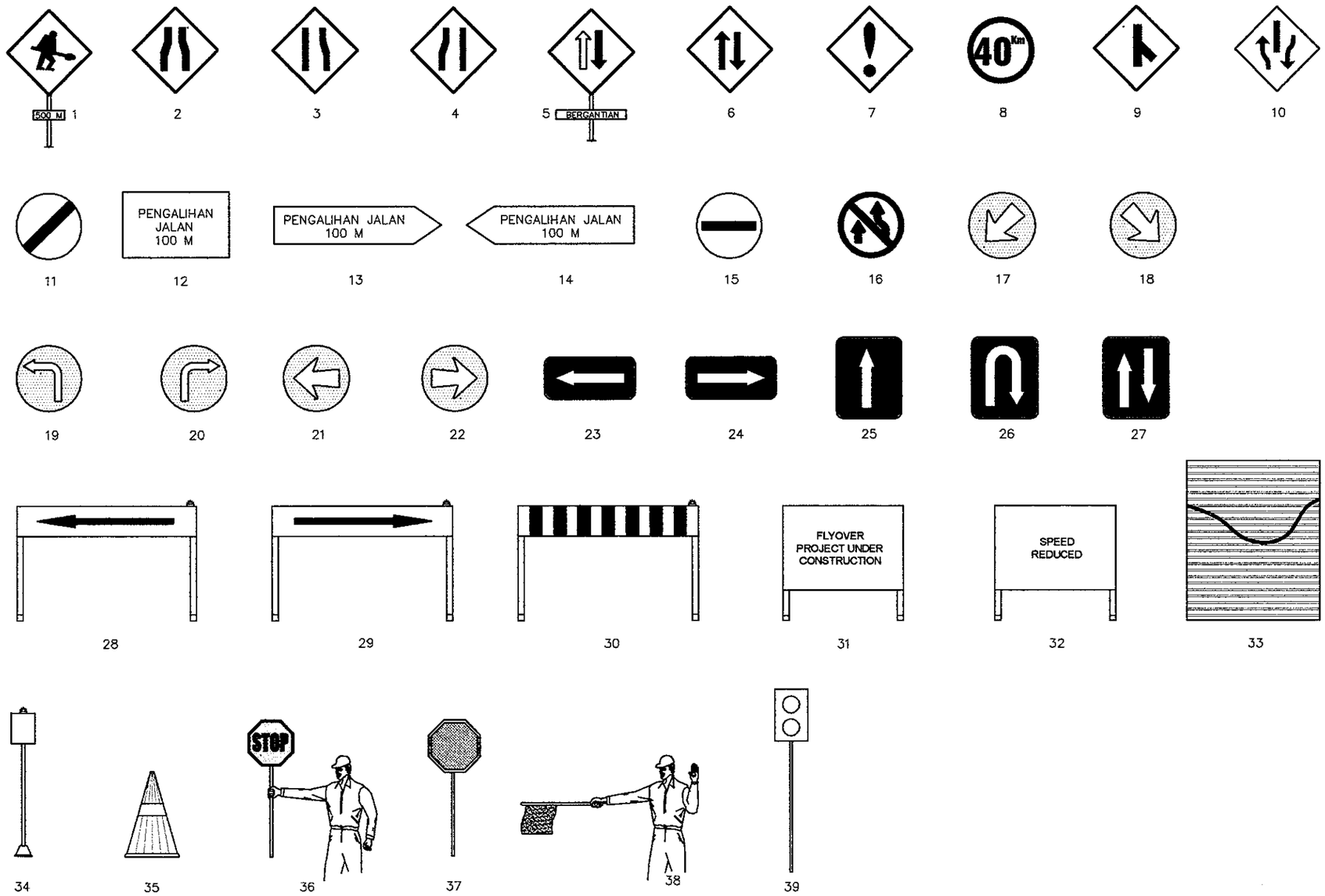

1. 500M ROADWORK
2. CHANGING OF ROAD WIDTH
3. LANE ENDS RIGHT
4. LANE ENDS LEFT
5. PRIORITY FOR VEHICLES
6. TWO WAY TRAFFIC
7. LOOK OUT
8. SPEED LIMIT MAX 40KM
9. INTERSECTION FROM BACK RIGHT DIRECTION TRAFFIC
10. BEGINNING OF SEPERATOR ONE TWO WAY TRAFFIC
11. END OF PROHIBITION AREA
12. 100M CHANGE TRAFFIC
13. 100M CHANGE TRAFFIC TO RIGHT
14. 100M CHANGE TRAFFIC TO LEFT
15. NO ENTRY FOR ALL VEHICLES
16. TWO TRAFFIC
17. MUST PASS THIS LANE
18. MUST PASS THIS LANE
19. TURNING INDICATION TO LEFT
20. TURNING INDICATION TO RIGHT
21. INDICATION OF DIRECTION TO LEFT
22. INDICATION OF DIRECTION TO RIGHT
23. ONE WAY LEFT
24. ONE WAY RIGHT
25. STRAIGHT ONE WAY
26. U TURN
27. PRIORITY GIVEN TO THE COMING TRAFFIC
28. CLOSED ROAD FOR CHANGE TRAFFIC TO LEFT
29. CLOSED ROAD FOR CHANGE TRAFFIC TO RIGHT
30. CLOSED TRAFFIC UNDER CONSTRUCTION
31. INFORMATION BOARD DURING CONSTRUCTION AHEAD
32. REDUCED SPEED WARNING BOARD
33. PROTECTION DURING CONSTRUCTION
34. PLAN LIGHT
35. CONE
36. CONTROL TRAFFIC GO / AHEAD
37. GO AHEAD
38. FLAGGER CONTROL
39. FLASHING WARNING LIGHT

COLOR LEGEND :

- YELLOW
- RED
- BLACK
- BLUE

NOTE :

STANDARD TRAFFIC WITH ROAD SIGNS SHOULD CONFORM WITH THE " DINAS PERHUBUNGAN LALU LINTAS DAN ANGKUTAN JALAN SETEMPAT

1 / - STANDARD TRAFFIC SIGNS DURING CONSTRUCTION
NOT TO SCALE

JAPAN INTERNATIONAL COOPERATION AGENCY / KATAHIRA & ENGINEERS INTERNATIONAL	DESIGNED BY	CHECKED BY	SUBMITTED BY	REPUBLIC OF INDONESIA MINISTRY OF PUBLIC WORKS DIRECTORATE GENERAL OF HIGHWAYS	PROJECT AND LOCATION :	SCALE :	DRAWING TITLE :	DRAWING NO :
	Name: R. UENO	Name: T. OKUMURA	Name: M. KIUCHI		DETAILED DESIGN STUDY OF NORTH JAVA CORRIDOR FLYOVER PROJECT GEBANG FLYOVER - CONTRACT PACKAGE 2 (NAGREG - GEBANG) WEST JAVA PROVINCE	AS SHOWN	STANDARD TRAFFIC MANAGEMENT SAFETY DEVICE DETAILS	GTR-020
	Sign	Sign	Sign	APPROVED BY: Ir. HERRY VAZA M,Eng.Sc				SHEET NO :
	Date	Date	Date	NIP. : 110038400 — Sign / Date		FULL SIZE A3		20 / 26

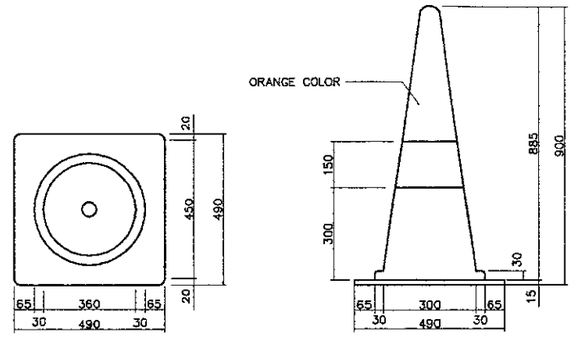

3 SAFETY CONE
SCALE 1 : 20

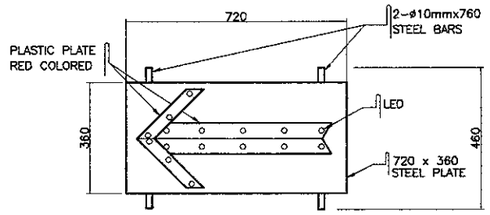

6 ARROW PLATE OF LED
SCALE 1 : 20

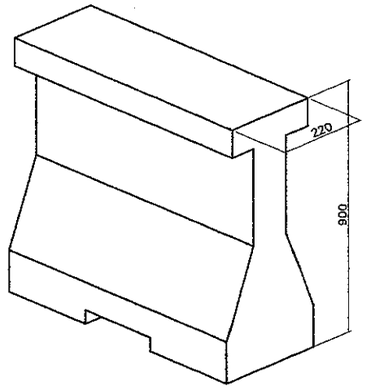

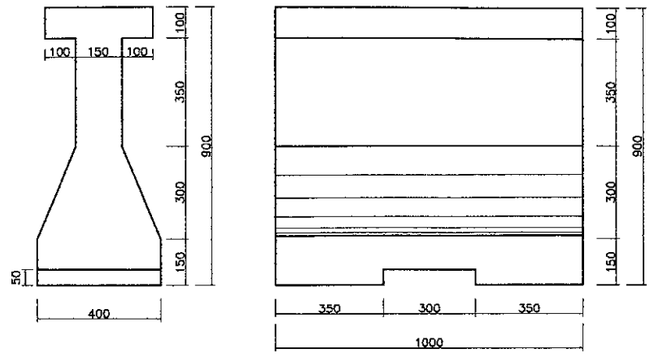

7 MOVABLE BARRIER
SCALE 1 : 20

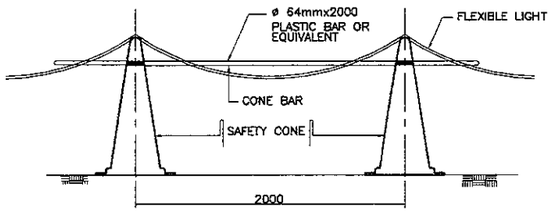

2 CONE BAR
NOT TO SCALE

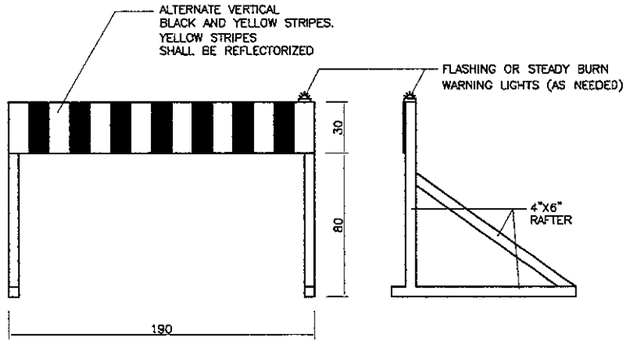

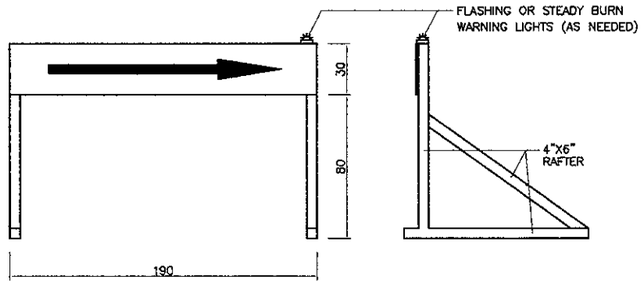

5 TEMPORARY SIGN BOARD SUPPORT
SCALE 1 : 30

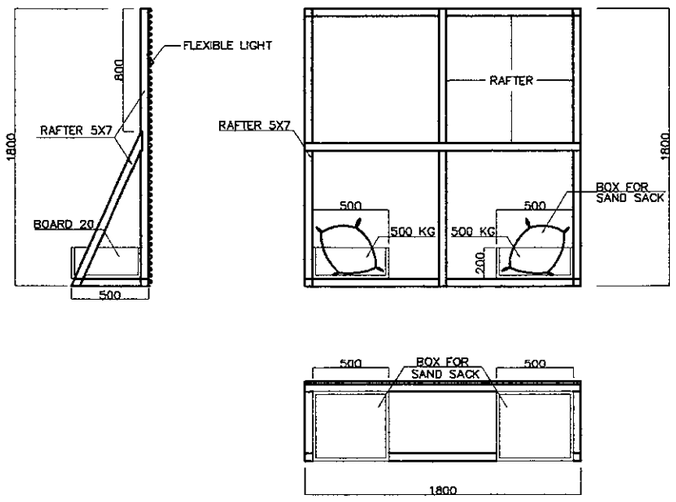

1 TEMPORARY FENCE DURING CONSTRUCTION
SCALE 1 : 40

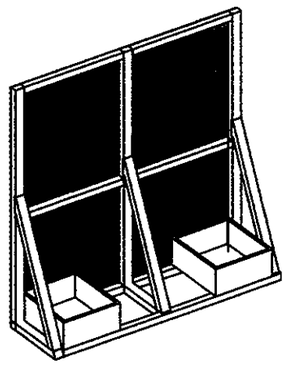

ISOMETRIC

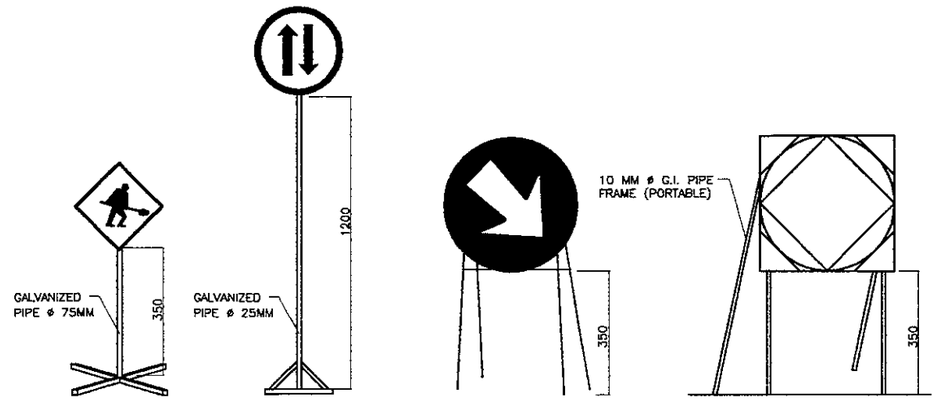

4 TEMPORARY SIGN SUPPORT DETAILS
NOT TO SCALE

JAPAN INTERNATIONAL COOPERATION AGENCY / KATAHIRA & ENGINEERS INTERNATIONAL	DESIGNED BY	CHECKED BY	SUBMITTED BY	REPUBLIC OF INDONESIA MINISTRY OF PUBLIC WORKS DIRECTORATE GENERAL OF HIGHWAYS	PROJECT AND LOCATION :	SCALE :	DRAWING TITLE :	DRAWING NO :
	Name: R. UENO	Name: T. OKUMURA	Name: M. KIUCHI		DETAILED DESIGN STUDY OF NORTH JAVA CORRIDOR FLYOVER PROJECT GEBANG FLYOVER - CONTRACT PACKAGE 2 (NAGREG - GEBANG) WEST JAVA PROVINCE	1 : 20	STANDARD SIGN BOARD PANEL	GTR-021
	Sign	Sign	Sign	APPROVED BY: Ir. HERRY VAZA M,Eng.Sc NIP. : 110038400				SHEET NO :
	Date	Date	Date	Sign / Date		FULL SIZE A3		21 / 26

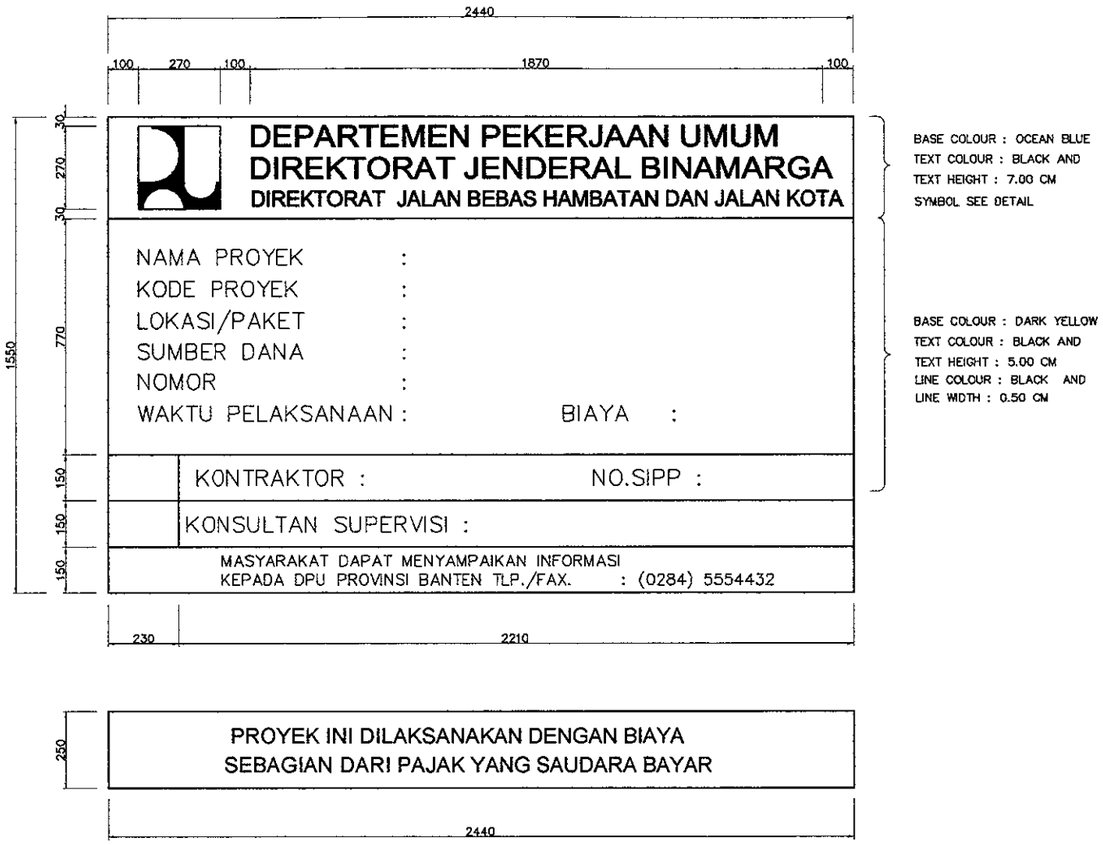

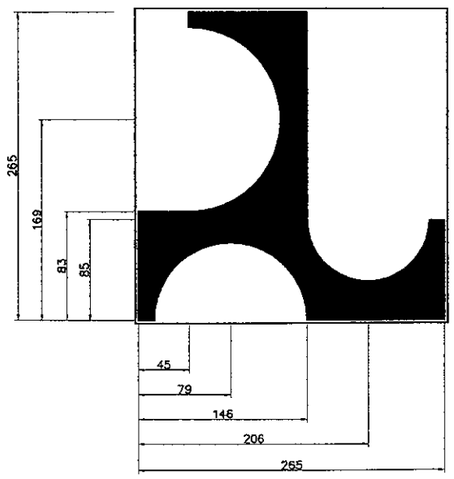

SYMBOL OF MINISTRY OF PUBLIC WORKS

SYMBOL OF THE MINISTRY OF SETTLEMENT AND
REGIONAL INFRASTRUCTURE IS A PROPELLER WITH
DIMENSION SHOWN ON THE DRAWING
BASE COLOUR : DARK YELLOW
OBJECT COLOUR : DARK BLUE

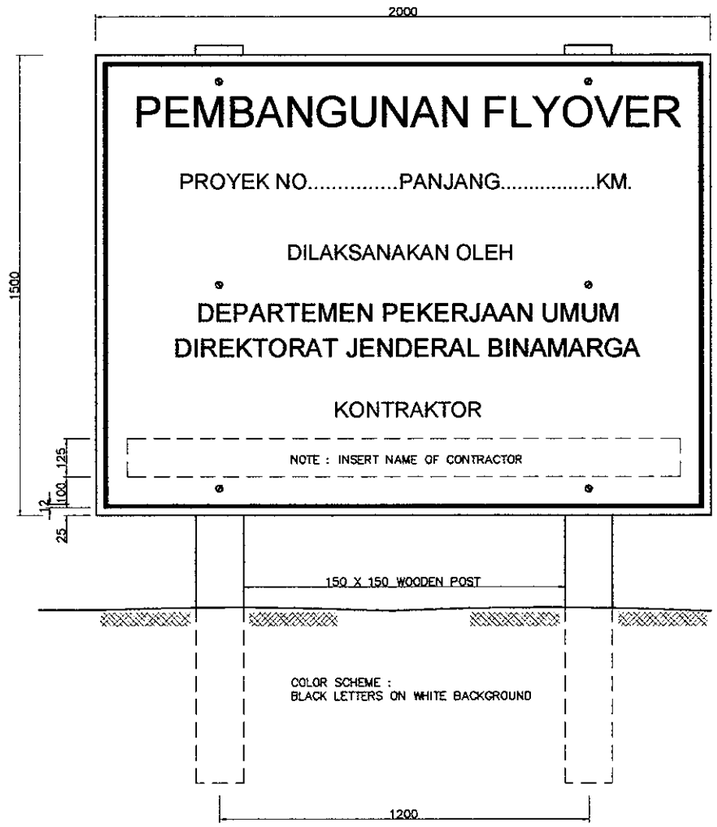

A - FRONT ELEVATION
SCALE 1 : 20

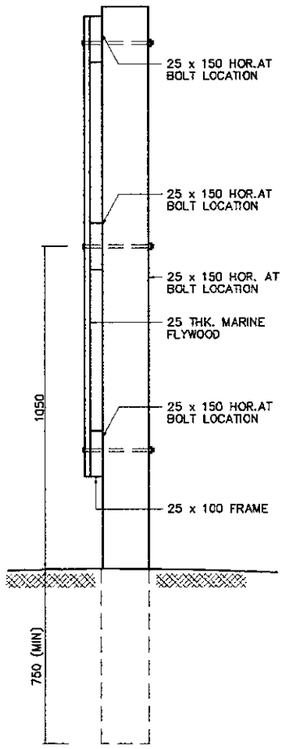

B - SIDE ELEVATION
SCALE 1 : 20

1 - PROJECT DESCRIPTION SIGN BOARD DURING CONSTRUCTION
1 : 20

JAPAN INTERNATIONAL COOPERATION AGENCY KATAHIRA & ENGINEERS INTERNATIONAL	DESIGNED BY	CHECKED BY	SUBMITTED BY	REPUBLIC OF INDONESIA MINISTRY OF PUBLIC WORKS DIRECTORATE GENERAL OF HIGHWAYS	PROJECT AND LOCATION :	SCALE :	DRAWING TITLE :	DRAWING NO :
	Name: R. UENO	Name: T. OKUMURA	Name: M. KIUCHI		DETAILED DESIGN STUDY OF NORTH JAVA CORRIDOR FLYOVER PROJECT GEBANG FLYOVER - CONTRACT PACKAGE 2 (NAGREG - GEBANG) WEST JAVA PROVINCE	1 : 3000	STAGES OF CONSTRUCTION	GTR-022
	Sign:	Sign:	Sign:	APPROVED BY: Ir. HERRY VAZA M.Eng.Sc NIP. : 110038400				SHEET NO : 22 / 26
	Date:	Date:	Date:	Sign: Date:		FULL SIZE A3		

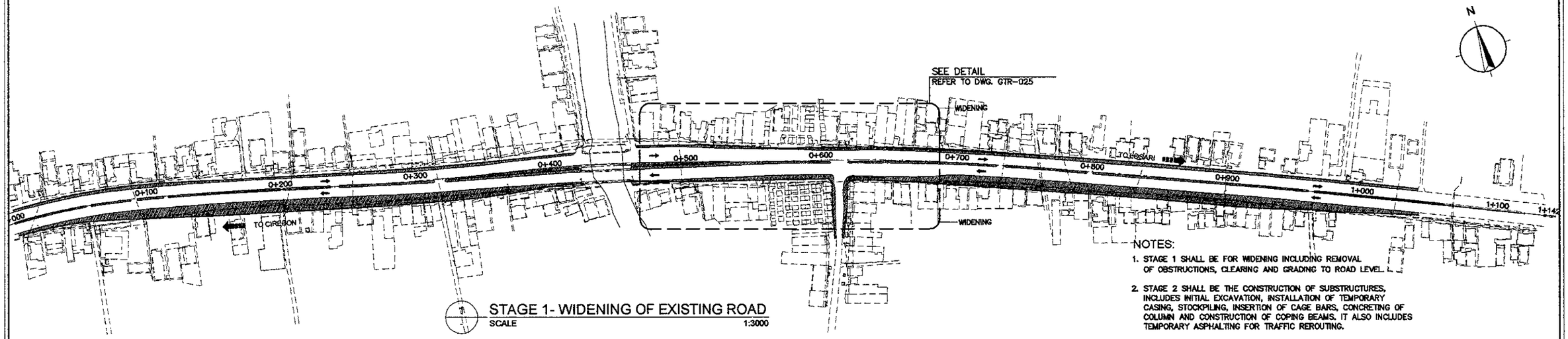

1 STAGE 1- WIDENING OF EXISTING ROAD
SCALE 1:3000

NOTES:

1. STAGE 1 SHALL BE FOR WIDENING INCLUDING REMOVAL OF OBSTRUCTIONS, CLEARING AND GRADING TO ROAD LEVEL.
2. STAGE 2 SHALL BE THE CONSTRUCTION OF SUBSTRUCTURES. INCLUDES INITIAL EXCAVATION, INSTALLATION OF TEMPORARY CASING, STOCKPILING, INSERTION OF CAGE BARS, CONCRETING OF COLUMN AND CONSTRUCTION OF COPING BEAMS. IT ALSO INCLUDES TEMPORARY ASPHALTING FOR TRAFFIC REROUTING.
3. STAGE 3 SHALL BE THE CONSTRUCTION OF SUPERSTRUCTURE, APPROACH RAMPS, SERVICE ROADS AND MAIN ROADS. INCLUDES INSTALLATION OF GIRDERS, CONCRETING OF SLAB, PARAPET RAILINGS, MSE WALLS EMBANKMENT AT APPROACH RAMPS AND ASPHALT CONCRETING. CONSTRUCTION OF DRAINAGE SYSTEM AND ELECTRICAL SYSTEM AT VIADUCT AND AT-GRADE SHALL BE DONE ALSO IN THIS STAGE.
4. SUB-STAGES OF WORKS SHALL BE DEFINED BY THE CONTRACTOR. TRAFFIC MANAGEMENT SHALL BE ADJUSTED TO SUIT ACTUAL CONSTRUCTION AREA AND TO BE APPROVED BY THE ENGINEER.
5. NECESSARY TRAFFIC DEVICES AND ROAD SIGNAGES NEAR AND AROUND THE CONSTRUCTION AREA SHALL BE AS DIRECTED BY THE ENGINEER, OR AS SHOWN IN THE PLANS.

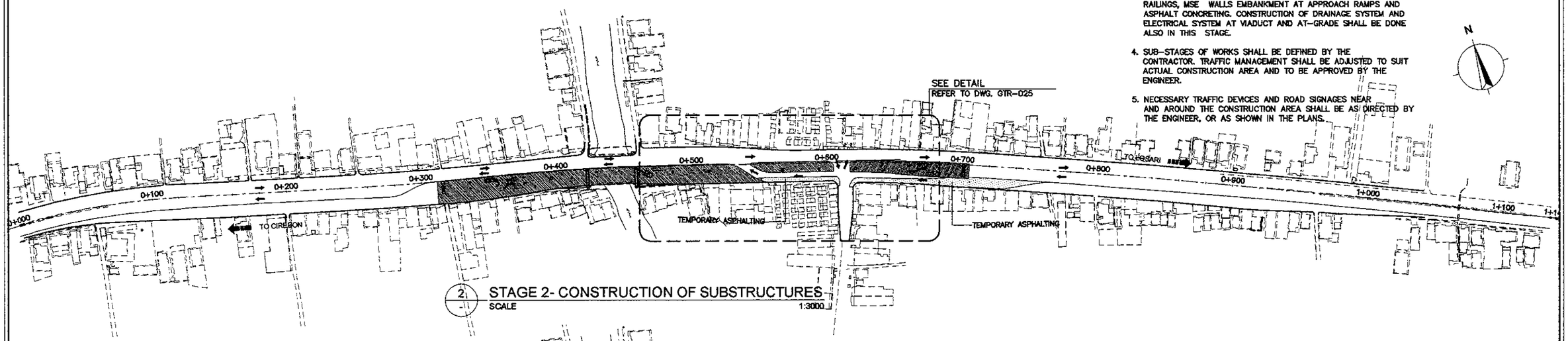

2 STAGE 2- CONSTRUCTION OF SUBSTRUCTURES
SCALE 1:3000

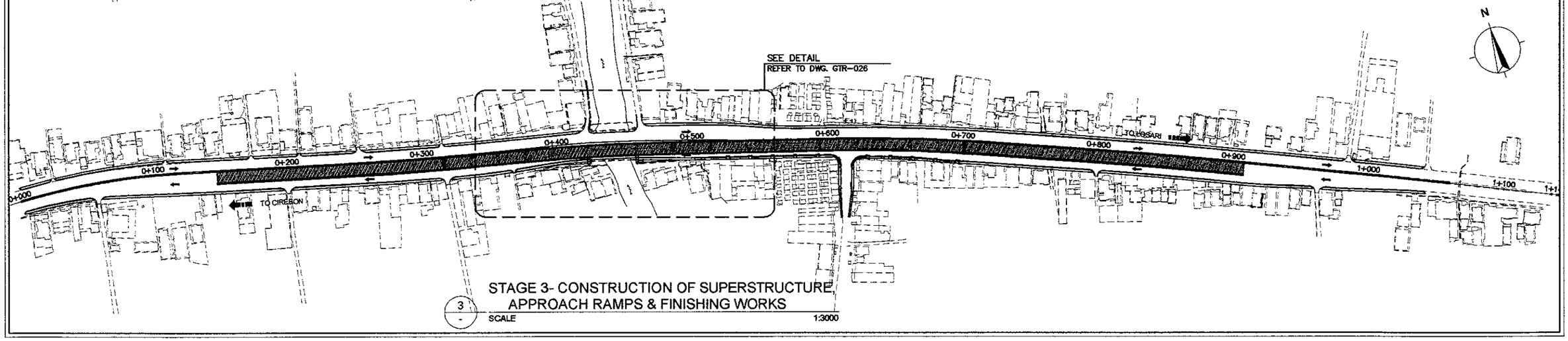

3 STAGE 3- CONSTRUCTION OF SUPERSTRUCTURE, APPROACH RAMPS & FINISHING WORKS
SCALE 1:3000

JICA JAPAN INTERNATIONAL COOPERATION AGENCY / KEI KATAHIRA & ENGINEERS INTERNATIONAL	DESIGNED BY	CHECKED BY	SUBMITTED BY	REPUBLIC OF INDONESIA MINISTRY OF PUBLIC WORKS DIRECTORATE GENERAL OF HIGHWAYS	PROJECT AND LOCATION :	SCALE :	DRAWING TITLE :	DRAWING NO :
	Name: R. UENO	Name: T. OKUMURA	Name: M. KIUCHI		DETAILED DESIGN STUDY OF NORTH JAVA CORRIDOR FLYOVER PROJECT GEBANG FLYOVER - CONTRACT PACKAGE 2 (NAGREG - GEBANG) WEST JAVA PROVINCE	AS SHOWN	TYPICAL BORED PILING METHODOLOGY	GTR-023
	Sign	Sign	Sign	APPROVED BY: Ir. HERRY VAZA M,Eng.Sc				SHEET NO :
	Date	Date	Date	NIP. : 110038400 — Sign / Date		FULL SIZE A3		23 / 26

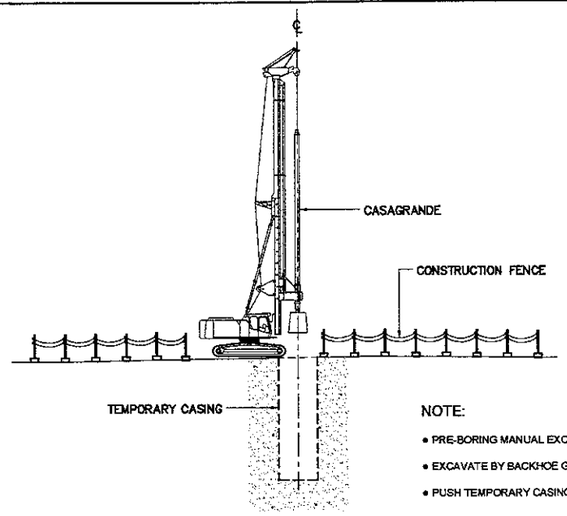

NOTE:
- PRE-BORING MANUAL EXCAVATION (MIN. 2.0m.)
- EXCAVATE BY BACKHOE GREATER THAN 4.0m.
- PUSH TEMPORARY CASING

A1 - SEQUENCE - 1
SCALE 1:400

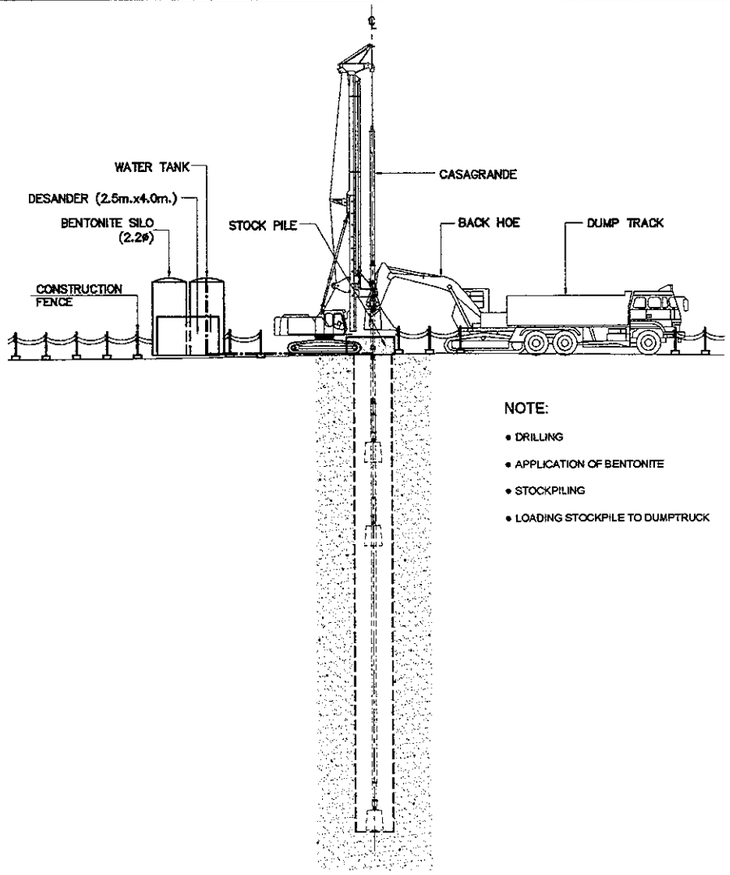

NOTE:
- DRILLING
- APPLICATION OF BENTONITE
- STOCKPILING
- LOADING STOCKPILE TO DUMPTRUCK

A2 - SEQUENCE - 2
SCALE 1:400

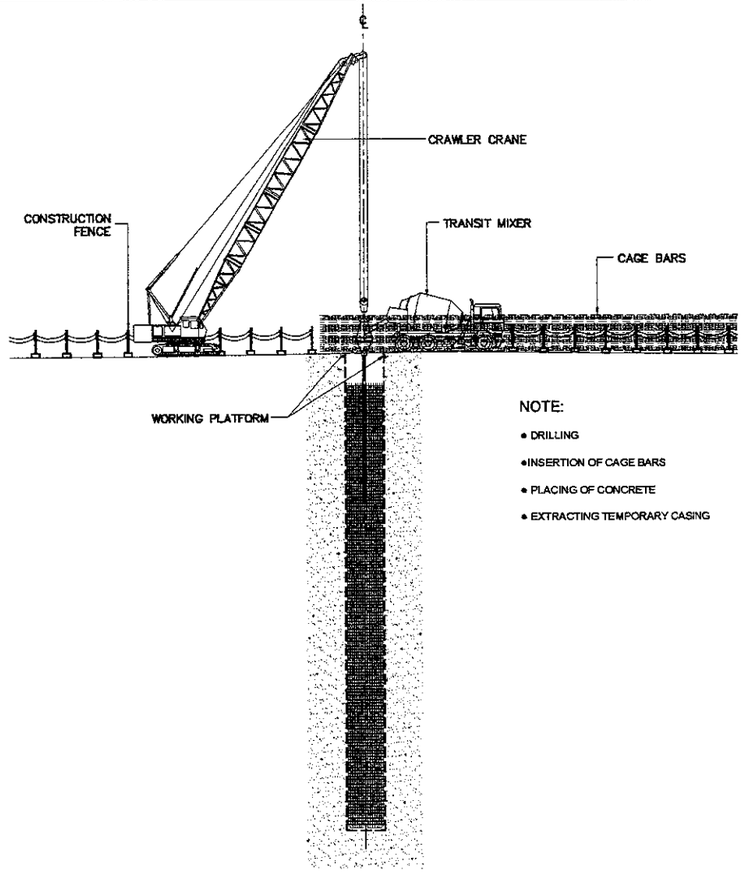

NOTE:
- DRILLING
- INSERTION OF CAGE BARS
- PLACING OF CONCRETE
- EXTRACTING TEMPORARY CASING

A3 - SEQUENCE - 3
SCALE 1:400

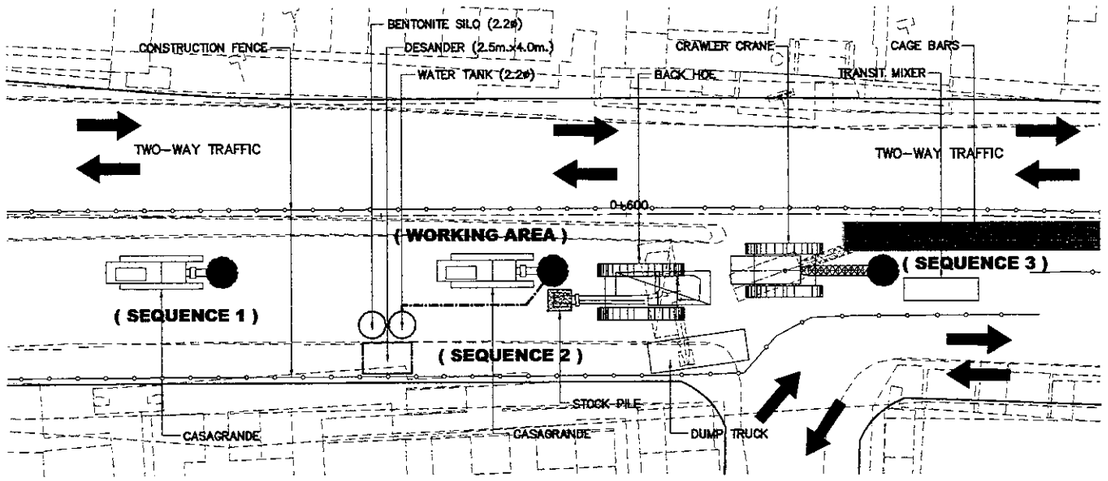

A - SEQUENCE LAYOUT PLAN
SCALE 1:500

1 - TYPICAL BORED PILING METHODOLOGY
SCALE AS SHOWN

JAPAN INTERNATIONAL COOPERATION AGENCY KATAHIRA & ENGINEERS INTERNATIONAL	DESIGNED BY	CHECKED BY	SUBMITTED BY	REPUBLIC OF INDONESIA MINISTRY OF PUBLIC WORKS DIRECTORATE GENERAL OF HIGHWAYS	PROJECT AND LOCATION :	SCALE :	DRAWING TITLE :	DRAWING NO :
	Name: R. UENO	Name: T. OKUMURA	Name: M. KIUCHI		DETAILED DESIGN STUDY OF NORTH JAVA CORRIDOR FLYOVER PROJECT GEBANG FLYOVER - CONTRACT PACKAGE 2 (NAGREG - GEBANG) WEST JAVA PROVINCE	AS SHOWN	TYPICAL INSTALLATION OF GIRDER	GTR-024
	Sign	Sign	Sign	APPROVED BY: Ir. HERRY VAZA M,Eng.Sc NIP. : 110038400				SHEET NO : 24 / 26
	Date	Date	Date	Sign / Date		FULL SIZE A3		

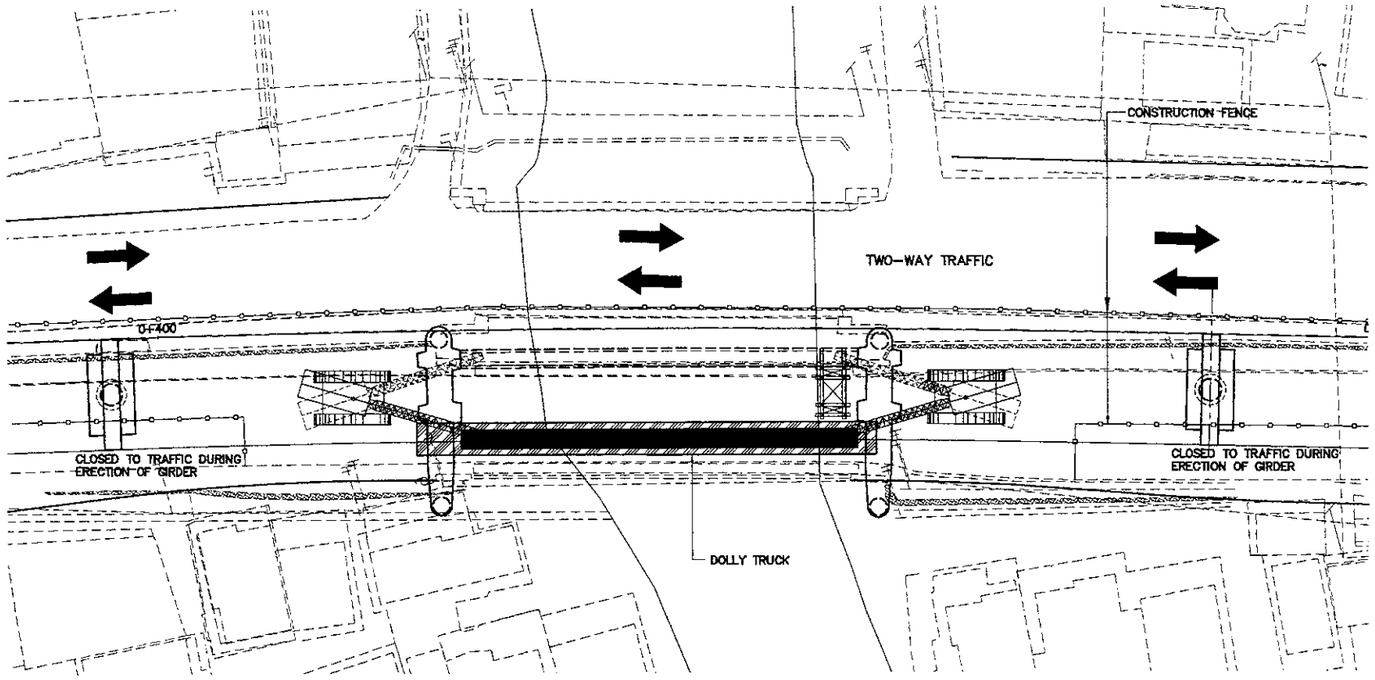

A - INSTALLATION OF GIRDER (PHASE - 1)
SCALE 1:500

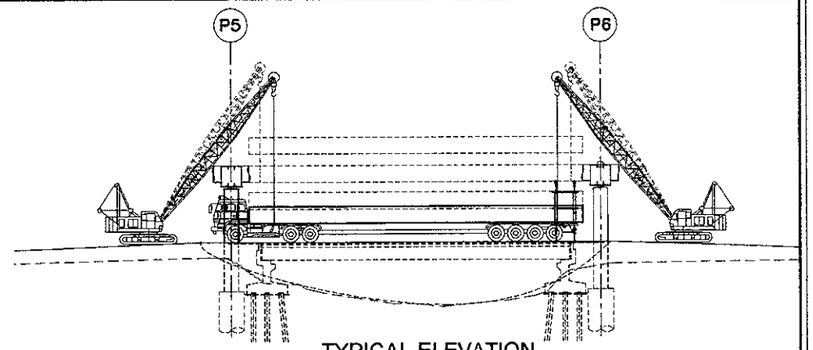

A1 - TYPICAL ELEVATION (PORTAL COLUMN PIER)
SCALE 1:600

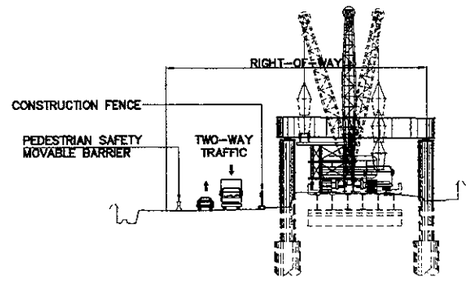

A2 - TYPICAL SECTION (PORTAL COLUMN PIER)
SCALE 1:600

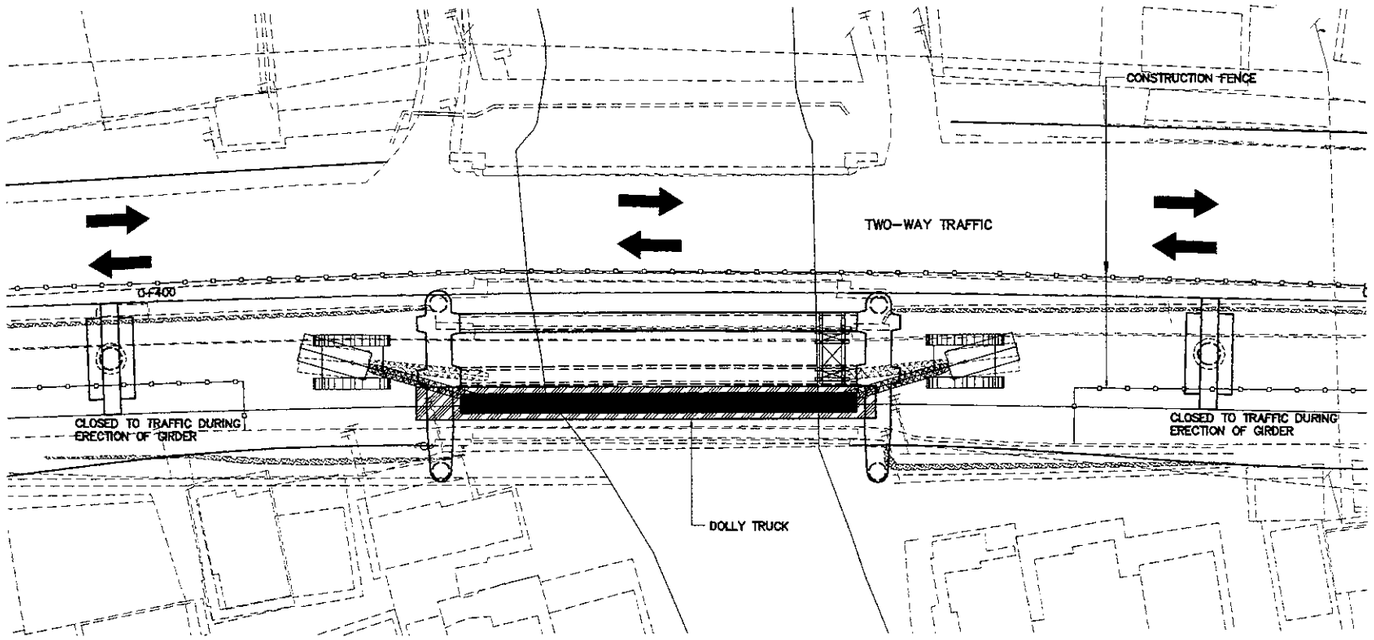

B - INSTALLATION OF GIRDER (PHASE - 2)
SCALE 1:500

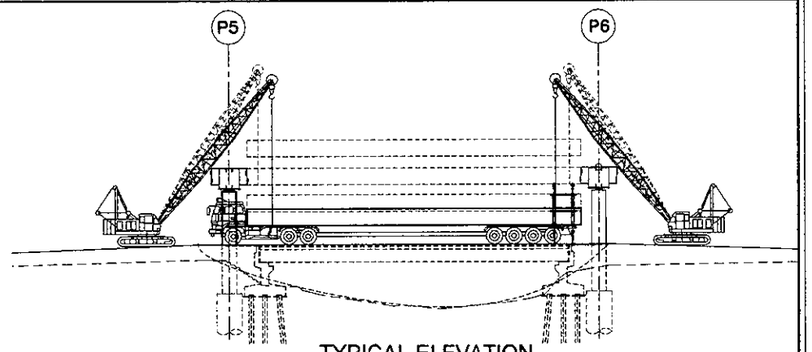

B1 - TYPICAL ELEVATION (PORTAL COLUMN PIER)
SCALE 1:600

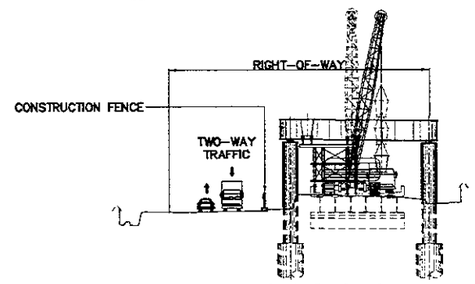

B2 - TYPICAL SECTION (PORTAL COLUMN PIER)
SCALE 1:600

1 - TYPICAL INSTALLATION OF GIRDER
SCALE AS SHOWN

JICA JAPAN INTERNATIONAL COOPERATION AGENCY / KEI KATAHIRA & ENGINEERS INTERNATIONAL	DESIGNED BY	CHECKED BY	SUBMITTED BY	REPUBLIC OF INDONESIA MINISTRY OF PUBLIC WORKS DIRECTORATE GENERAL OF HIGHWAYS	PROJECT AND LOCATION :	SCALE :	DRAWING TITLE :	DRAWING NO :
	Name: R. UENO	Name: T. OKUMURA	Name: M. KIUCHI	APPROVED BY: Ir. HERRY VAZA M,Eng.Sc	DETAILED DESIGN STUDY OF NORTH JAVA CORRIDOR FLYOVER PROJECT GEBANG FLYOVER - CONTRACT PACKAGE 2 (NAGREG - GEBANG) WEST JAVA PROVINCE	AS SHOWN	TRAFFIC MANAGEMENT LAYOUT 1 OF 2	GTR-025
	Sign:	Sign:	Sign:	NIP. : 110038400 Sign:				SHEET NO :
	Date:	Date:	Date:	Date:		FULL SIZE A3		25 / 26

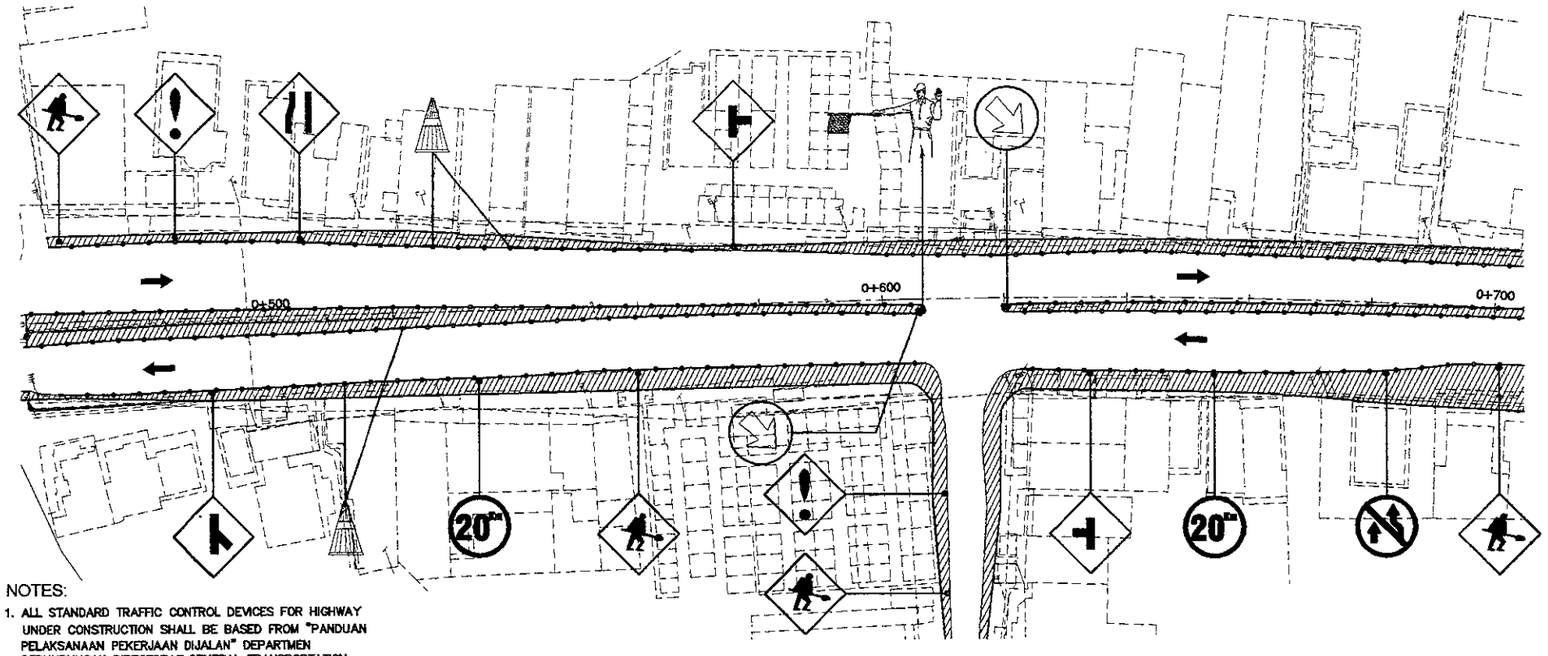

A AT WIDENING AREA
SCALE 1:1000

NOTES:

1. ALL STANDARD TRAFFIC CONTROL DEVICES FOR HIGHWAY UNDER CONSTRUCTION SHALL BE BASED FROM "PANDUAN PELAKSANAAN PEKERJAAN DIJALAN" DEPARTMEN PERHUBUNGAN DIRECTORAT GENERAL TRANSPORTATION FOR URBAN ROAD.
2. OTHER NECESSARY SAFETY SIGNS TO BE USED IN THE CONSTRUCTION WORK ZONE SHALL BE APPROVED BY THE ENGINEER.
3. FOR STANDARD WORK SIGNS, REFER TO DWG. GTR-019
4. INSTALL TWO (2) PROJECT SIGN BOARDS AS SHOWN IN THE STANDARD DRAWING AT EACH END OF PROJECT CONSTRUCTION AREA.

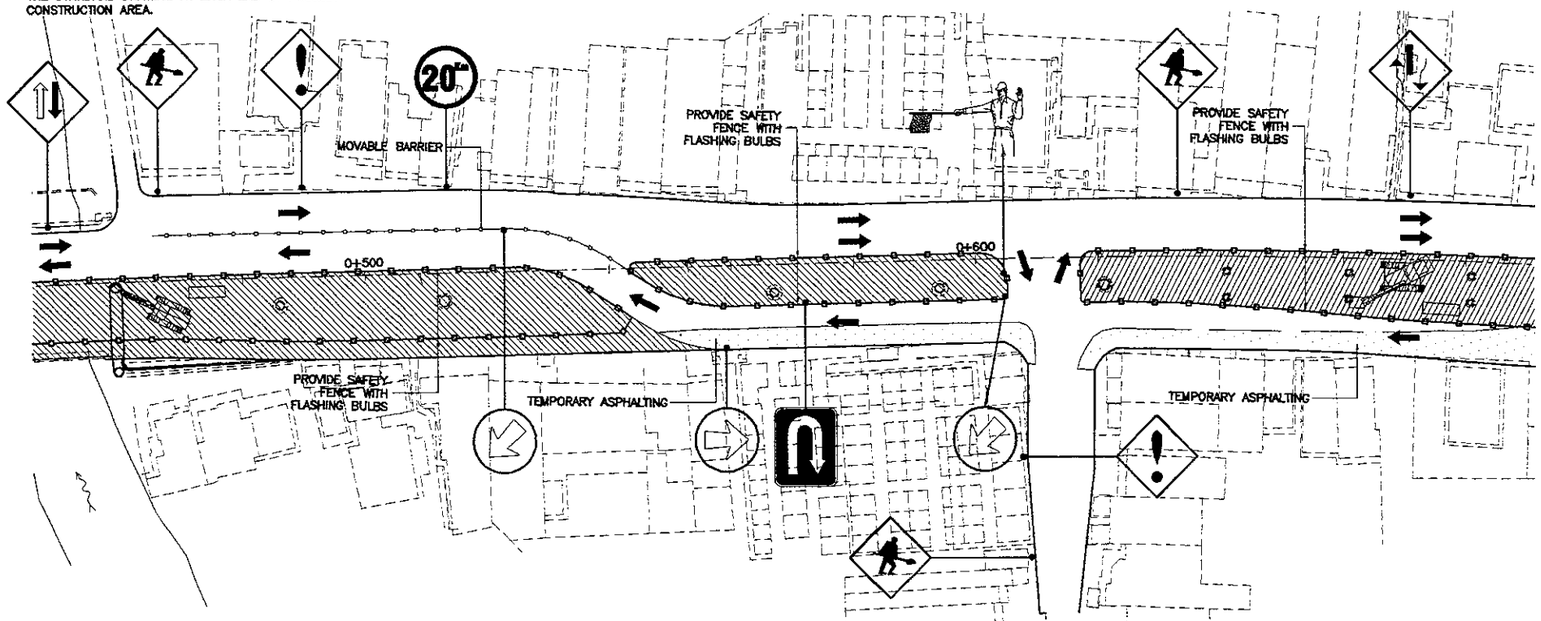

C AT CONSTRUCTION OF SUBSTRUCTURES
SCALE 1:1000

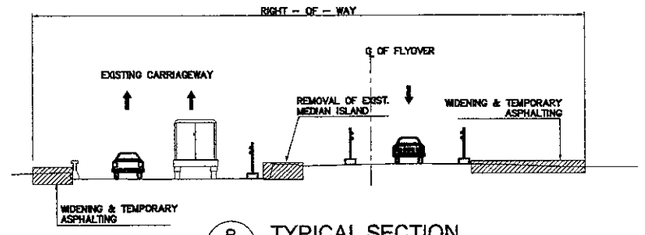

B TYPICAL SECTION
SCALE 1:300

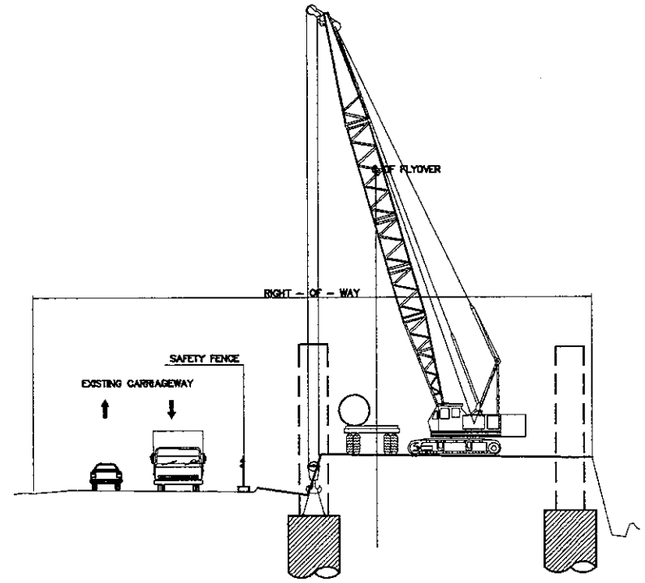

D TYPICAL SECTION
SCALE 1:300

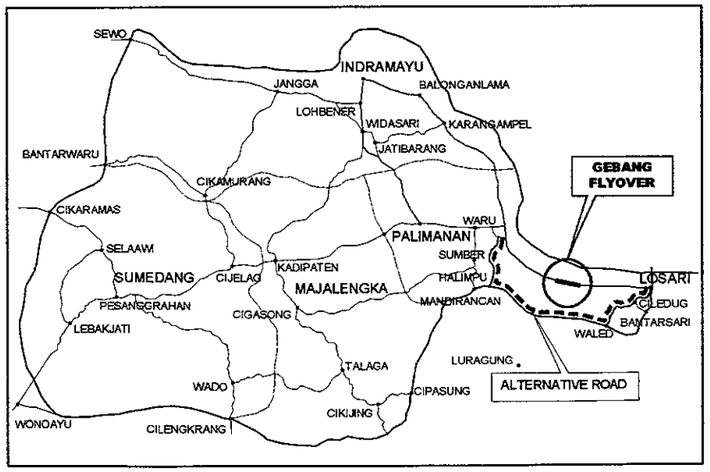

ALTERNATIVE ROAD DURING CONSTRUCTION
NOT TO SCALE

1 TRAFFIC MANAGEMENT LAYOUT
SCALE AS SHOWN

JAPAN INTERNATIONAL COOPERATION AGENCY KATAHIRA & ENGINEERS INTERNATIONAL	DESIGNED BY	CHECKED BY	SUBMITTED BY	REPUBLIC OF INDONESIA MINISTRY OF PUBLIC WORKS DIRECTORATE GENERAL OF HIGHWAYS	PROJECT AND LOCATION :	SCALE :	DRAWING TITLE :	DRAWING NO :
	Name: R. UENO	Name: T. OKUMURA	Name: M. KIUCHI		DETAILED DESIGN STUDY OF NORTH JAVA CORRIDOR FLYOVER PROJECT GEBANG FLYOVER - CONTRACT PACKAGE 2 (NAGREG - GEBANG) WEST JAVA PROVINCE	AS SHOWN	TRAFFIC MANAGEMENT LAYOUT 2 OF 2	GTR-026
	Sign	Sign	Sign	APPROVED BY: Ir. HERRY VAZA M.Eng.Sc NIP. : 110038400				SHEET NO :
	Date	Date	Date	Sign / Date		FULL SIZE A3		26 / 26

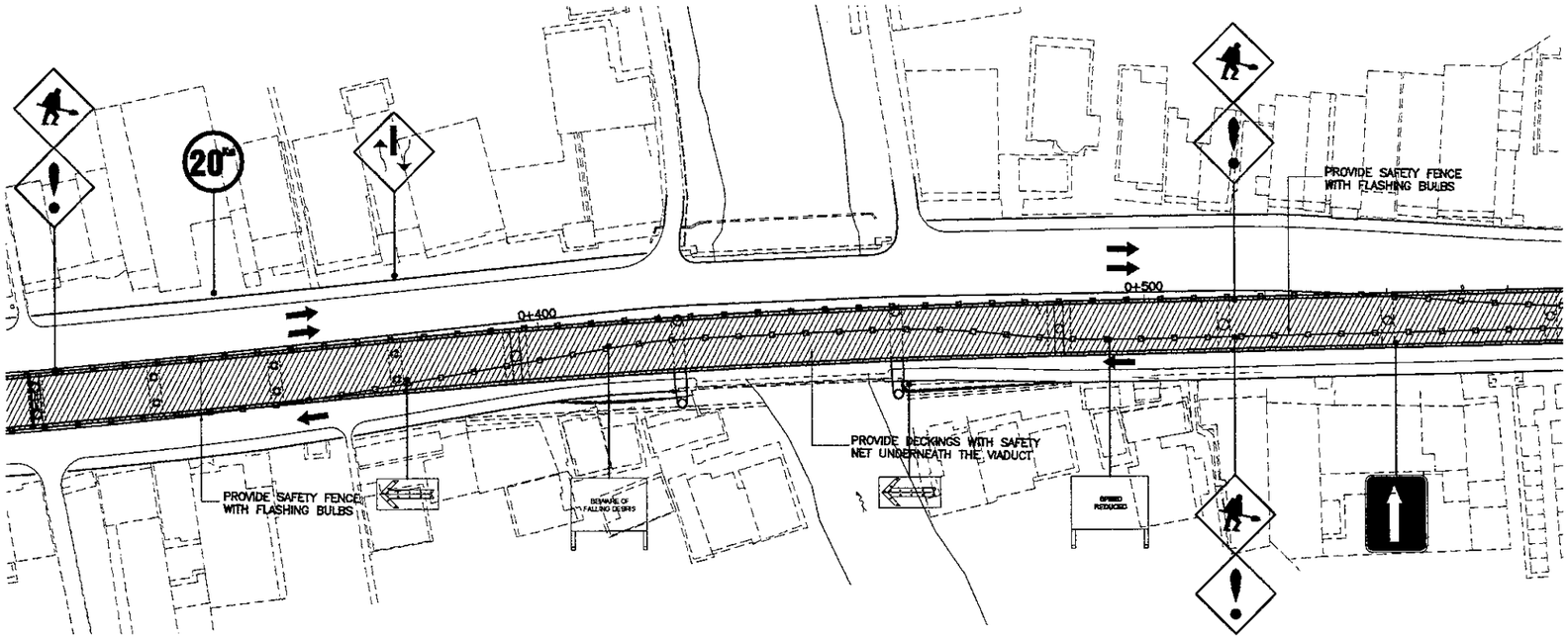

A - AT CONSTRUCTION OF SUPERSTRUCTURES
SCALE 1:1000

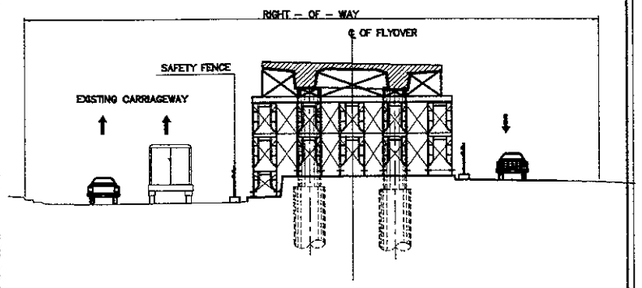

B - TYPICAL SECTION (TWO-COLUMN PIER)
SCALE 1:300

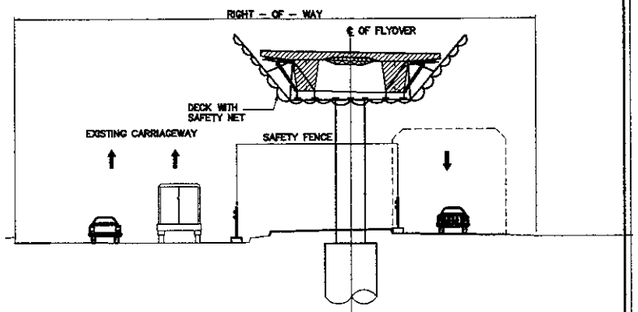

C - TYPICAL SECTION (SINGLE COLUMN PIER)
SCALE 1:300

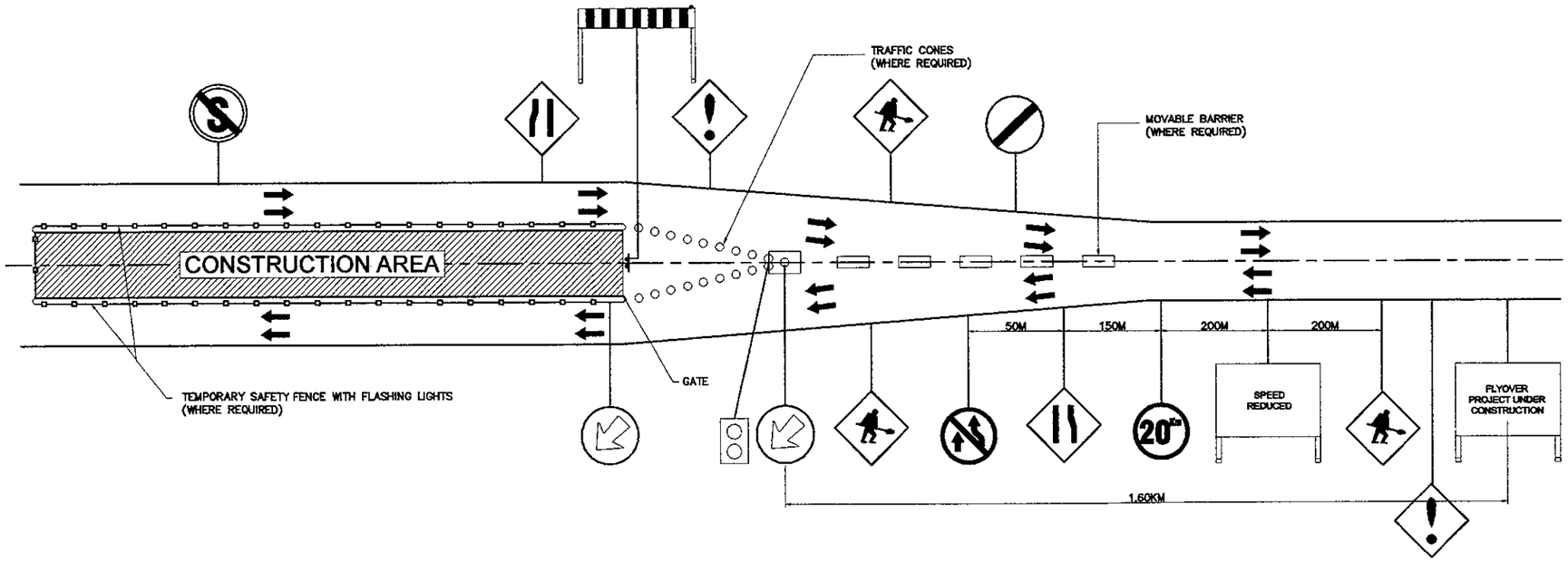

D - APPROACHING CONSTRUCTION AREA
SCALE 1:1000

1 - TRAFFIC MANAGEMENT LAYOUT
SCALE AS SHOWN

NOTES:

1. ALL STANDARD TRAFFIC CONTROL DEVICES FOR HIGHWAY UNDER CONSTRUCTION SHALL BE BASED FROM "PANDUAN PELAKSANAAN PEKERJAAN DIJALAN" DEPARTMEN PERHUBUNGAN DIRECTORAT GENERAL TRANSPORTATION FOR URBAN ROAD.
2. OTHER NECESSARY SAFETY SIGNS TO BE USED IN THE CONSTRUCTION WORK ZONE SHALL BE APPROVED BY THE ENGINEER.
3. FOR STANDARD WORK SIGNS, REFER TO DWG. GTR-019
4. INSTALL TWO (2) PROJECT SIGN BOARDS AS SHOWN IN THE STANDARD DRAWING AT EACH END OF PROJECT CONSTRUCTION AREA.