JAPAN INTERNATIONAL COOPERATION AGENCY KATAHIRA & ENGINEERS INTERNATIONAL	DESIGNED BY	CHECKED BY	SUBMITTED BY	REPUBLIC OF INDONESIA MINISTRY OF PUBLIC WORKS DIRECTORATE GENERAL OF HIGHWAYS	PROJECT AND LOCATION :	SCALE :	DRAWING TITLE :	DRAWING NO :
	Name: A. GOURLEY	Name: T. OKUMURA	Name: M. KIUCHI		DETAILED DESIGN STUDY OF NORTH JAVA CORRIDOR FLYOVER PROJECT GEBANG FLYOVER - CONTRACT PACKAGE 2 (NAGREG - GEBANG) WEST JAVA PROVINCE	1 : 50	PIER COPING REINFORCEMENT P12 (EXP.) (2 OF 4)	GSB-031
	Sign	Sign	Sign	APPROVED BY: Ir. HERRY VAZA M,Eng.Sc				SHEET NO :
	Date	Date	Date	NIP. : 110038400 / Sign / Date		FULL SIZE A3		31 / 57

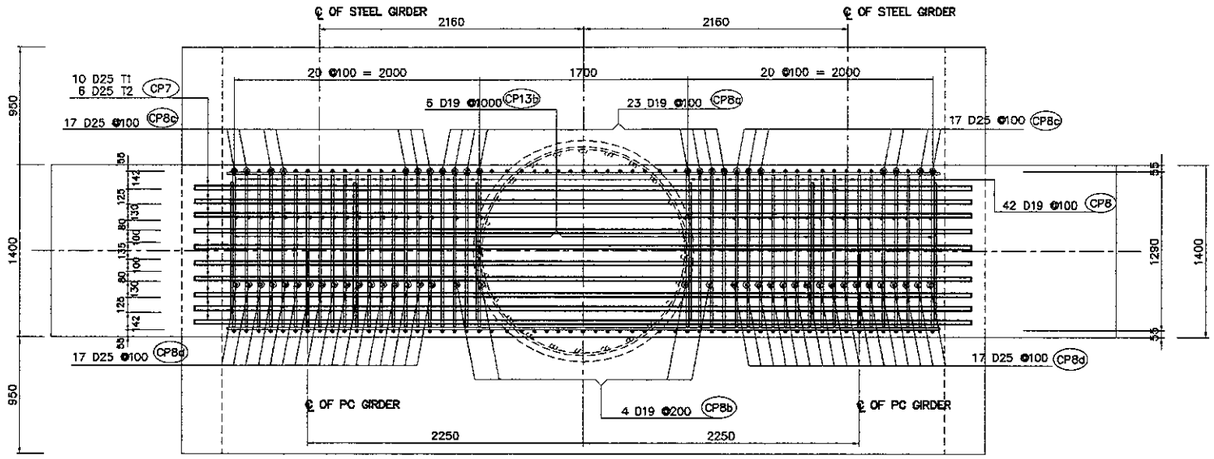

4 PLAN AT CONSTRUCTION JOINT

SCALE 1 : 50

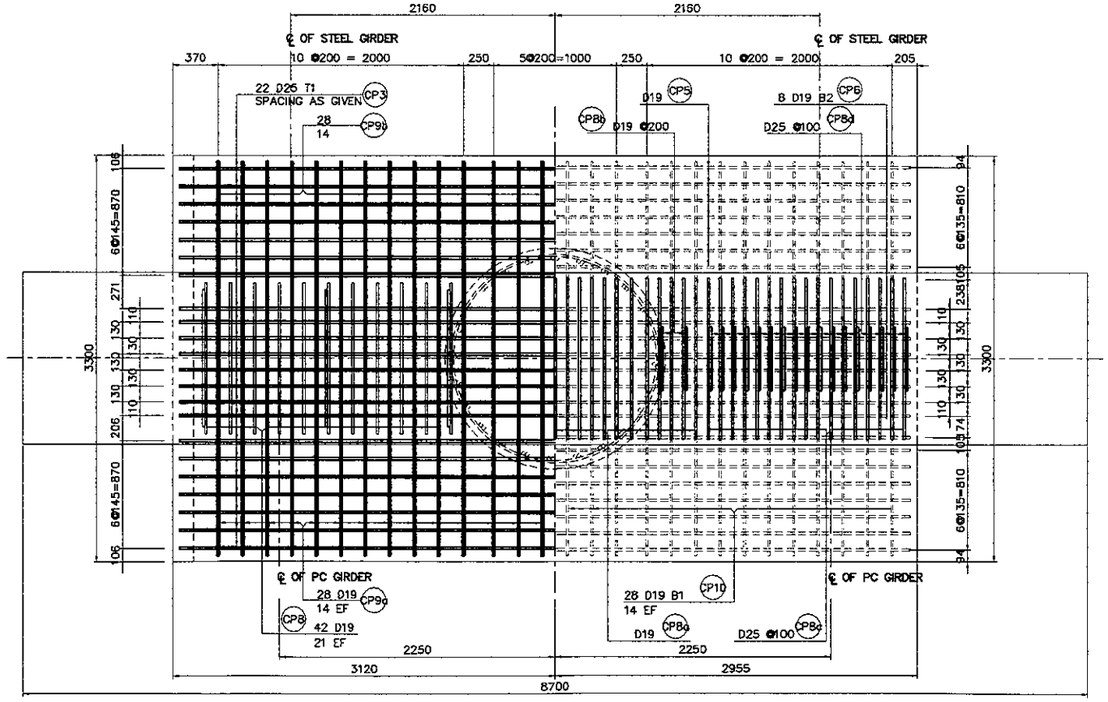

HALF SHOWING TOP

HALF SHOWING BASE

5 PLAN ON BEAM LEDGE

SCALE 1 : 50

NOTES :
1. ALL DIMENSIONS ARE IN MILIMETERS.
2. CONCRETE : fc' = 30MPa
3. REINFORCING STEEL=
   D51 : YIELD STRENGTH = 345 N/mm2
   OTHERS : YIELD STRENGTH = 390 N/mm2

PRINTED: OCT. 18, 2006

JAPAN INTERNATIONAL COOPERATION AGENCY KATAHIRA & ENGINEERS INTERNATIONAL	DESIGNED BY	CHECKED BY	SUBMITTED BY	REPUBLIC OF INDONESIA MINISTRY OF PUBLIC WORKS DIRECTORATE GENERAL OF HIGHWAYS	PROJECT AND LOCATION :	SCALE :	DRAWING TITLE :	DRAWING NO :
	Name: A. GOURLEY	Name: T. OKUMURA	Name: M. KIUCHI		DETAILED DESIGN STUDY OF NORTH JAVA CORRIDOR FLYOVER PROJECT GEBANG FLYOVER - CONTRACT PACKAGE 2 (NAGREG - GEBANG) WEST JAVA PROVINCE	1 : 40 1 : 50	PIER COPING REINFORCEMENT P12 (EXP.) (3 OF 4)	GSB-032
	Sign	Sign	Sign	APPROVED BY: Ir. HERRY VAZA M,Eng.Sc NIP. : 110038400				SHEET NO :
	Date	Date	Date	Sign / Date		FULL SIZE A3		32 / 57

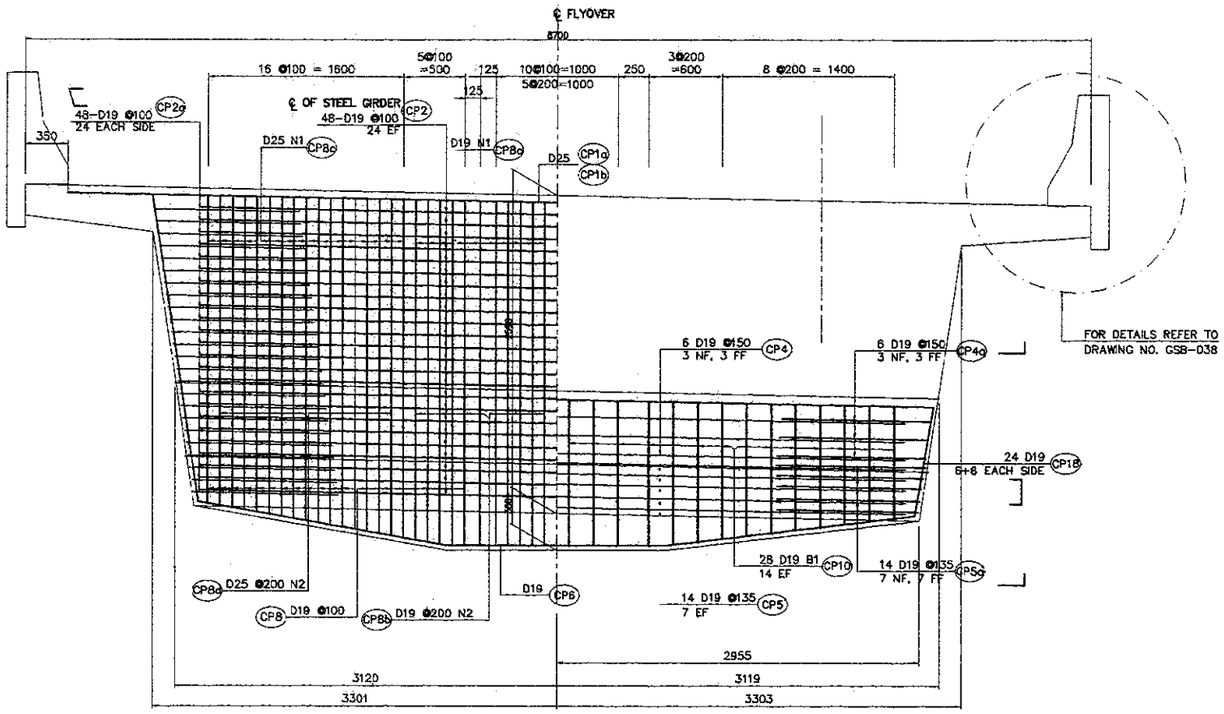

6 ELEVATION ON COPING
SCALE 1 : 50

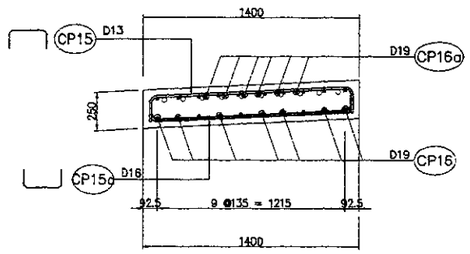

10 SECTION A-A
SCALE 1:40

7 ELEVATION ON BEAM LEDGE
SCALE 1 : 50

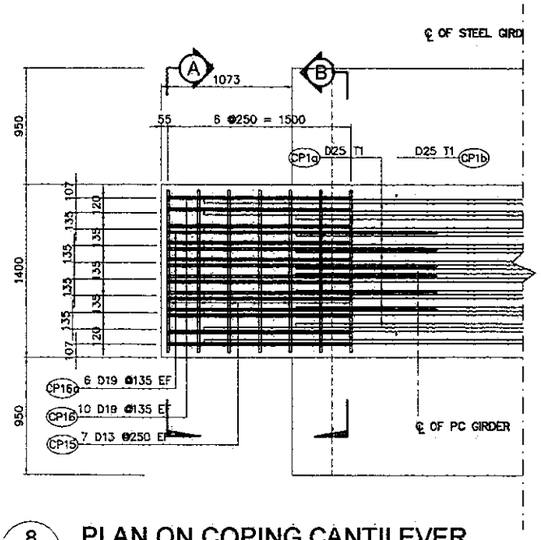

8 PLAN ON COPING CANTILEVER
SCALE 1 : 50

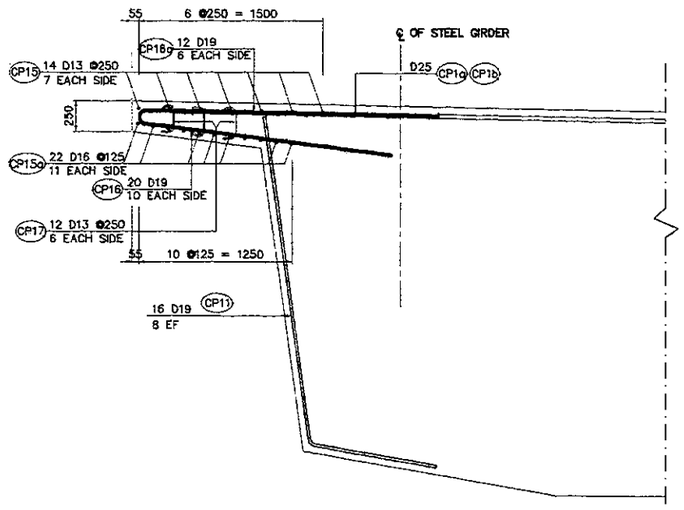

9 ELEVATION ON COPING CANTILEVER
SCALE 1 : 50

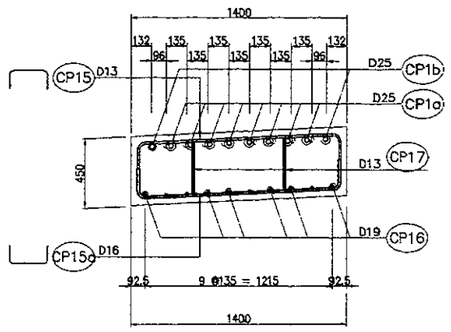

11 SECTION B-B
SCALE 1:40

NOTES :
1. ALL DIMENSIONS ARE IN MILIMETERS.
2. CONCRETE : fc' = 30MPa
3. REINFORCING STEEL=
   D51 : YIELD STRENGTH = 345 N/mm2
   OTHERS : YIELD STRENGTH = 390 N/mm2

JAPAN INTERNATIONAL COOPERATION AGENCY KATAHIRA & ENGINEERS INTERNATIONAL	DESIGNED BY	CHECKED BY	SUBMITTED BY	REPUBLIC OF INDONESIA MINISTRY OF PUBLIC WORKS DIRECTORATE GENERAL OF HIGHWAYS	PROJECT AND LOCATION :	SCALE :	DRAWING TITLE :	DRAWING NO :
	Name: A. GOURLEY	Name: T. OKUMURA	Name: M. KIUCHI		DETAILED DESIGN STUDY OF NORTH JAVA CORRIDOR FLYOVER PROJECT GEBANG FLYOVER - CONTRACT PACKAGE 2 (NAGREG - GEBANG) WEST JAVA PROVINCE	1 : 50	PIER COPING REINFORCEMENT P12 (EXP.) (4 OF 4)	GSB-033
	Sign	Sign	Sign	APPROVED BY: Ir. HERRY VAZA M,Eng.Sc NIP. : 110038400				SHEET NO :
	Date	Date	Date	Sign / Date		FULL SIZE A3		33 / 57

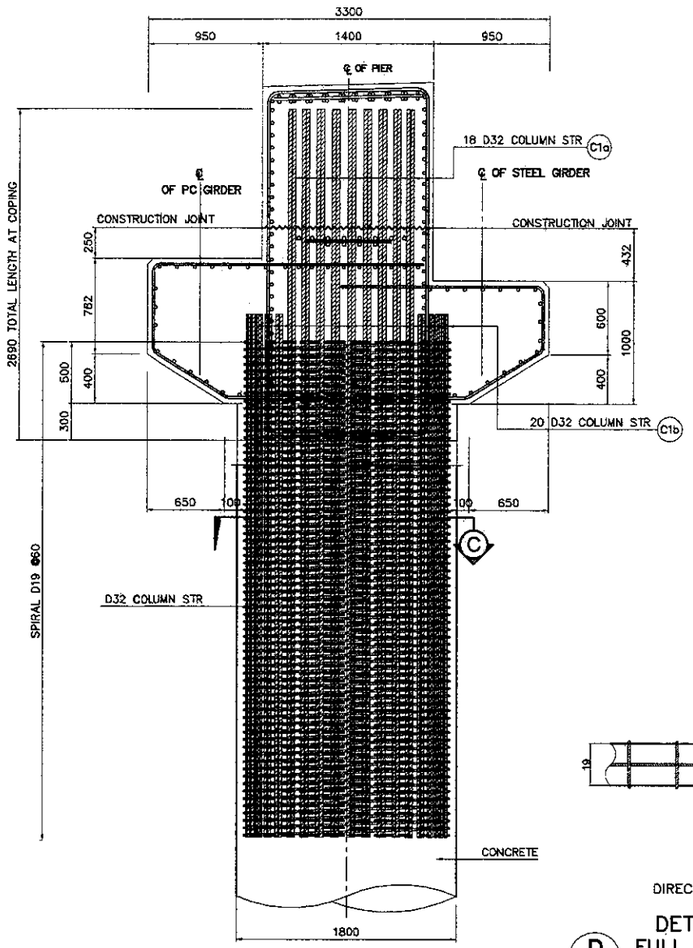

A ELEVATION
SCALE 1:50

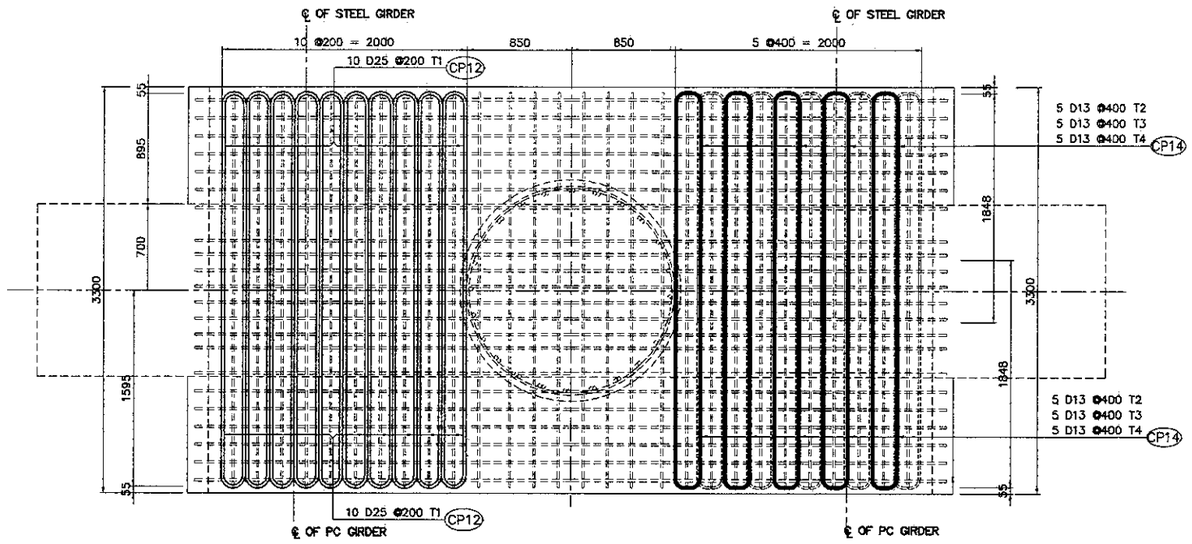

B STIRRUP PLACING
SCALE 1:50

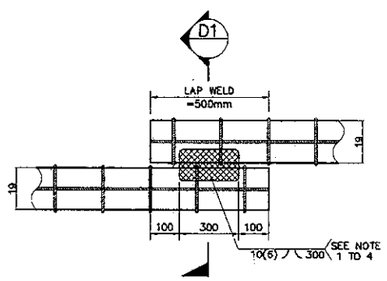

DIRECT LAP JOINT WITH IN CONTACT

D DETAIL OF SPIRAL REINF.
FULL LAP-WELD CONNECTION
NOT TO SCALE

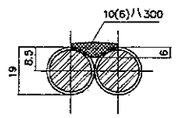

SECTION-D1
SINGLE FLARED-V-GROOVE WELD

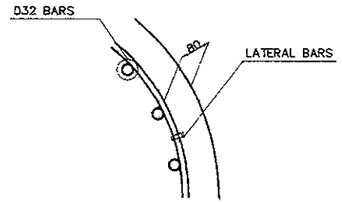

E TYPICAL BAR
LAYOUT DETAIL
NOT TO SCALE

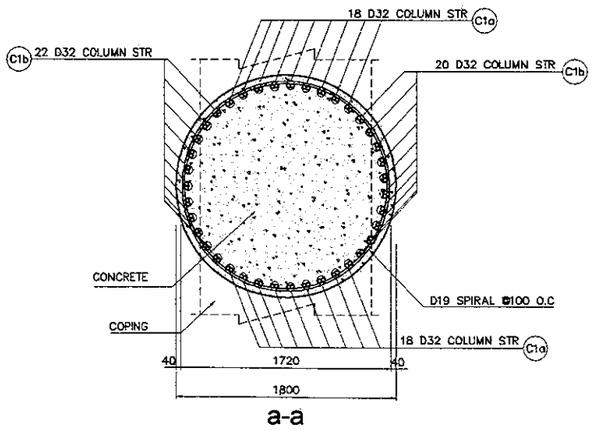

C SECTION DETAIL
SCALE 1:50

NOTES ON LAP-WELD CONNECTION :
1. SPIRAL REINFORCEMENT ARE LAP-WELD CONNECTED (FLARED-V-GROOVE TYPE)
2. WELDING SHOULD CONFORM TO AWS (D1.4) *STRUCTURAL WELDING CODE REINFORCED STEEL.*
3. USE ELECTRODE E90XX.
4. CARE SHOULD BE TAKEN NOT TO DAMAGE THE COLUMN MAIN DURING WELDING.

NOTES :
1. ALL DIMENSIONS ARE IN MILIMETERS.
2. CONCRETE : fc' = 30MPa
3. REINFORCING STEEL=
   D51 : YIELD STRENGTH = 345 N/mm2
   OTHERS : YIELD STRENGTH = 390 N/mm2

BAR BENDING DIAGRAM

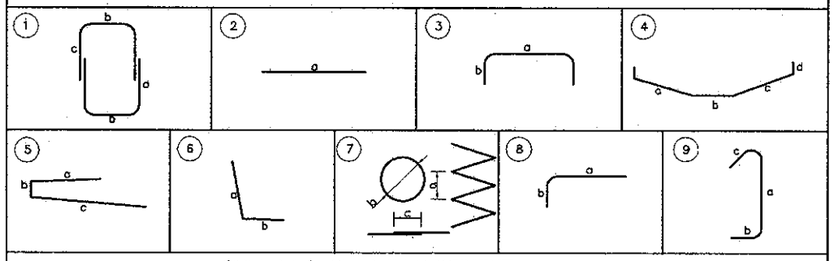

SCHEDULE OF REINFORCEMENT

LOCATION	BAR MARK	SIZE (mm)	BEND TYPE	DIMENSION (mm) OUT TO OUT a	b	c	d	e	f	LENGTH (mm)	NO. REQ'D.	UNIT WEIGHT (kg/m.)	WEIGHT (kg.)	VOLUME OF CONCRETE (m3)
COPING PIER 12	COPING													35.90
	CP1a	25	2	7250						7250	16	3.85	447	
	CP1b	25	2	8000						8000	2	3.85	62	
	CP1c	25	2	6500						6500	18	3.85	450	
	CP2	19	2	5850						5850	48	2.23	626	
	CP2a	19	3	1280	1250					3780	48	2.23	405	
	CP3	25	2	6000						6000	22	3.85	508	
	CP4	19	2	5650						5650	6	2.23	76	
	CP4a	19	8	1580	800					2380	12	2.23	64	
	CP5	19	2	5650						5650	14	2.23	176	
	CP5a	19	8	1345	800					2145	28	2.23	134	
	CP6	19	4	1917	1690	1917				6124	8	2.23	109	
	CP7	25	2	5800						5800	16	3.85	357	
	CP8	19	1	1290	1225	1200				7430	42	2.23	696	
	CP8a	19	1	2660	1300	800				9520	23	2.23	488	
	CP8b	19	1	2660	600	800				8120	4	2.23	72	
	CP8c	25	1	2660	1300	1150				10220	34	3.85	1338	
	CP8d	25	1	2660	600	1150				8820	34	3.85	1155	
	CP9a	19	8	2150	650					3450	28	2.23	215	
	CP9b	19	8	1665	510					2685	28	2.23	168	
	CP10	19	4	725	1965	725	515			4445	28	2.23	278	
	CP11	19	6	2645	1000					3645	16	2.23	130	
	CP12	25	3	200	1800					3800	40	3.85	585	
	CP13a	25	2	1200						1200	6	3.85	28	
	CP13b	25	2	700						700	6	3.85	16	
	CP14	13	3	200	1800					3800	60	1.04	237	
	CP15	13	3	1300	200					1700	14	1.04	25	
	CP15a	16	3	1300	350					2000	22	1.58	70	
	CP16	19	5	1500	165	2000				3665	20	2.23	164	
	CP16a	19	5	1500	165	165				1830	12	2.23	49	
	CP17	13	9	350	165	165				680	12	1.04	8	
	CP18	19	5	400	890	400				1690	24	2.23	91	
										TOTAL WEIGHT FOR / COPING = 9,227 Kgs.				

THE REINFORCEMENT SHOWN ON THIS TABLE IS FOR REFERENCE ONLY, THE CONTRACTOR SHOULD CHECKED AND VERIFY ALL DIMENSIONS, SIZES AND QUANTITIES OF REINFORCEMENT.

JICA JAPAN INTERNATIONAL COOPERATION AGENCY	DESIGNED BY	CHECKED BY	SUBMITTED BY	REPUBLIC OF INDONESIA MINISTRY OF PUBLIC WORKS DIRECTORATE GENERAL OF HIGHWAYS	PROJECT AND LOCATION :	SCALE :	DRAWING TITLE :	DRAWING NO :
KEI KATAHIRA & ENGINEERS INTERNATIONAL	Name: A. GOURLEY	Name: T. OKUMURA	Name: M. KIUCHI	APPROVED BY: Ir. HERRY VAZA M,Eng.Sc, NIP. : 110038400	DETAILED DESIGN STUDY OF NORTH JAVA CORRIDOR FLYOVER PROJECT GEBANG FLYOVER - CONTRACT PACKAGE 2 (NAGREG - GEBANG) WEST JAVA PROVINCE	1 : 50	SCHEDULE OF RISER REINF. AND ANCHOR BAR PIER P4 & P12 1 OF 2	GSB-034
	Sign	Sign	Sign	Sign		FULL SIZE A3		SHEET NO : 34 / 56
	Date	Date	Date	Date				

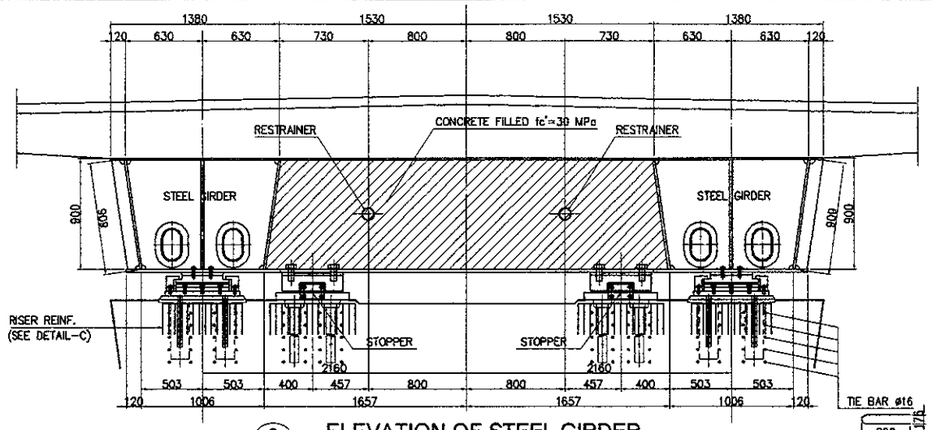

3 ELEVATION OF STEEL GIRDER
SCALE : 1 : 50

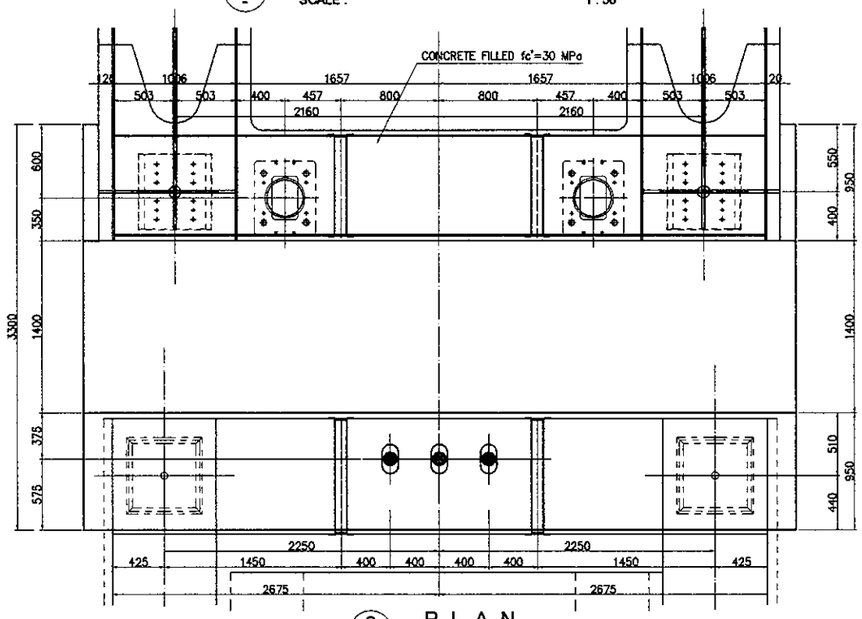

2 P L A N
SCALE : 1 : 50

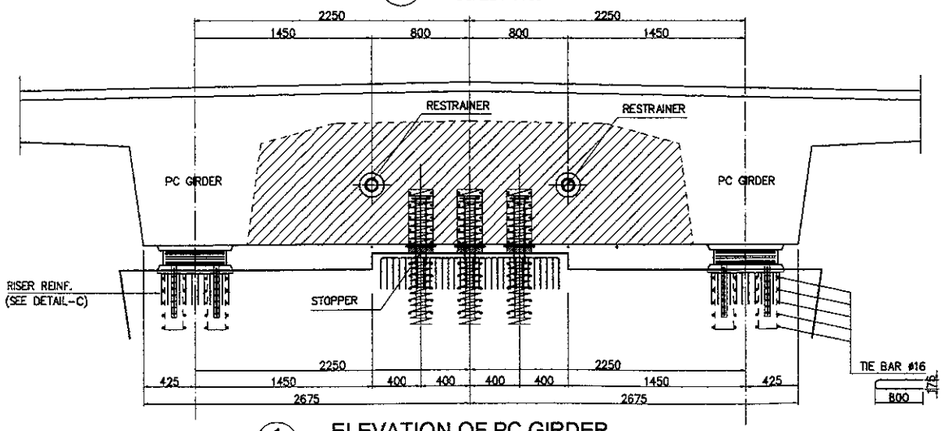

1 ELEVATION OF PC GIRDER
SCALE : 1 : 50

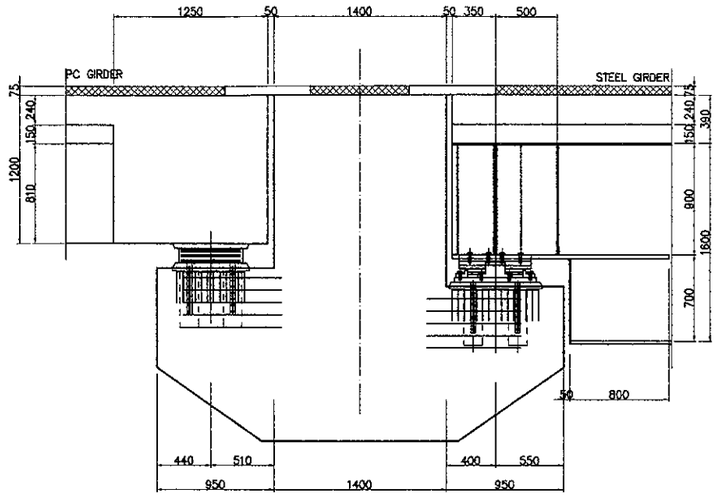

4 SECTION AT BEARING
SCALE : 1:50

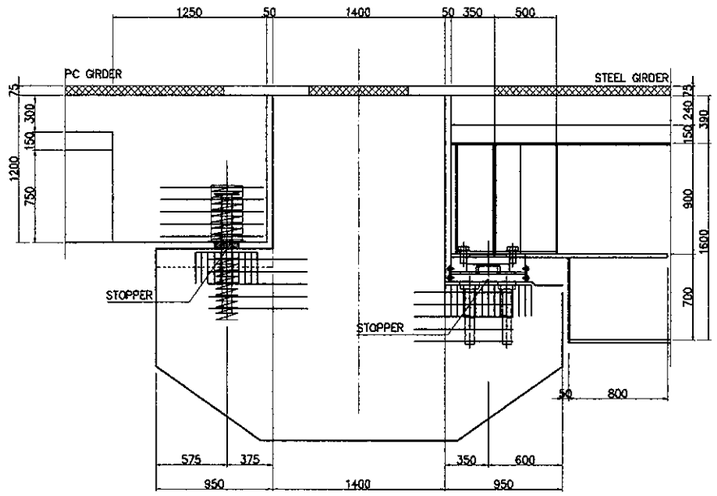

5 SECTION AT STOPER
SCALE : 1:50

JAPAN INTERNATIONAL COOPERATION AGENCY / KATAHIRA & ENGINEERS INTERNATIONAL	DESIGNED BY	CHECKED BY	SUBMITTED BY	REPUBLIC OF INDONESIA MINISTRY OF PUBLIC WORKS DIRECTORATE GENERAL OF HIGHWAYS	PROJECT AND LOCATION :	SCALE :	DRAWING TITLE :	DRAWING NO :
	Name: A. GOURLEY	Name: T. OKUMURA	Name: M. KIUCHI		DETAILED DESIGN STUDY OF NORTH JAVA CORRIDOR FLYOVER PROJECT GEBANG FLYOVER - CONTRACT PACKAGE 2 (NAGREG - GEBANG) WEST JAVA PROVINCE	1 : 10 1 : 25 1 : 40	SCHEDULE OF RISER REINF. AND ANCHOR BAR PIER P4 & P12 2 OF 2	GSB-035
	Sign	Sign	Sign	APPROVED BY: Ir. HERRY VAZA M.Eng.Sc NIP. : 110038400 — Sign		FULL SIZE A3		SHEET NO : 35 / 56
	Date	Date	Date	Date				

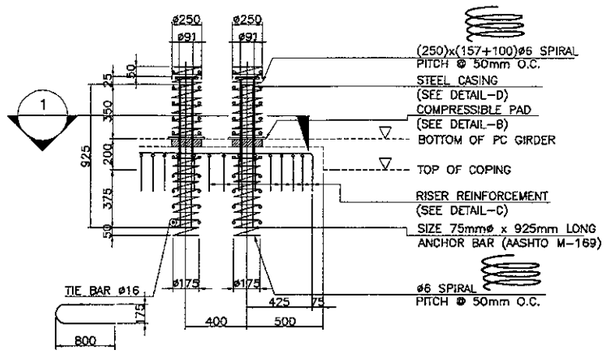

A — DOWEL BAR DETAILS
SCALE : 1:40

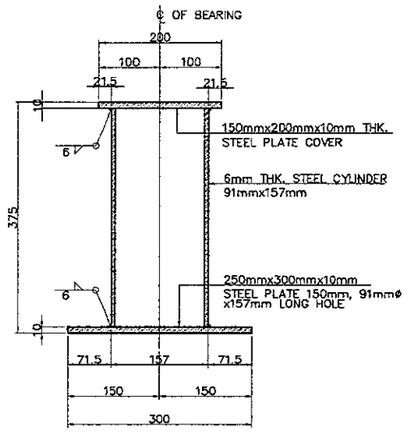

D1 — ELEVATION
SCALE : 1:10

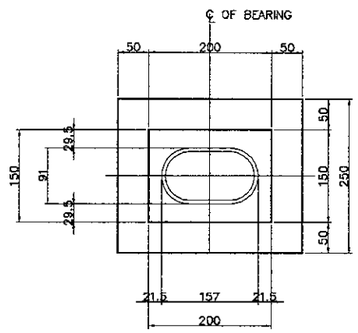

D2 — P L A N
SCALE : 1:10

D — STEEL CASING DETAILS
SCALE : 1:10

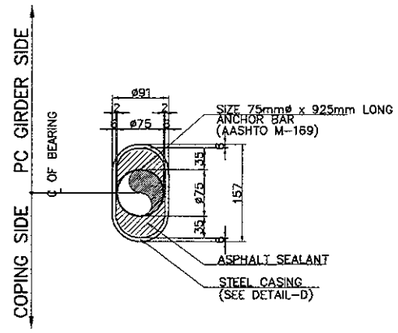

1 — S E C T I O N
SCALE : 1:10

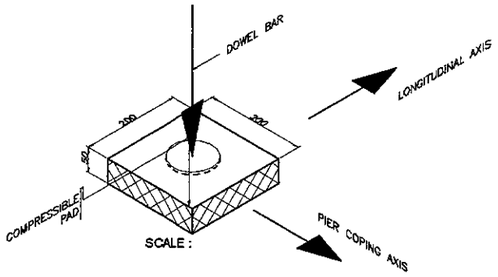

B — COMPRESSIBLE PAD FOR DOWELS
1:10

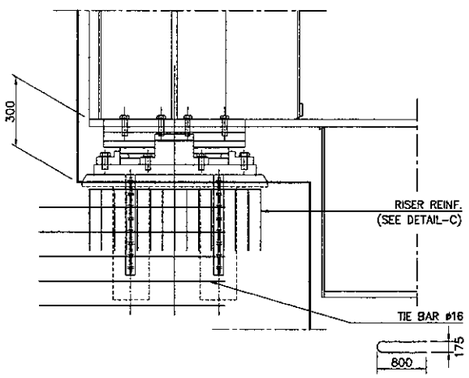

3 — DETAIL AT BEARING (STEEL)
SCALE : 1:25

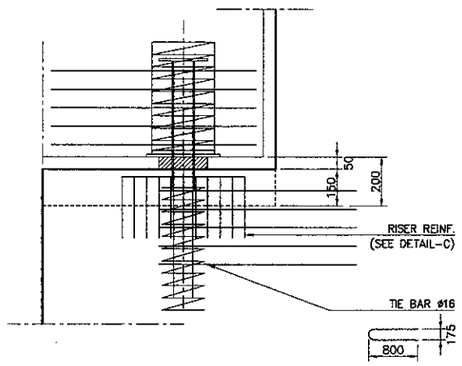

4 — DETAIL AT STOPPER (PC)
SCALE : 1:25

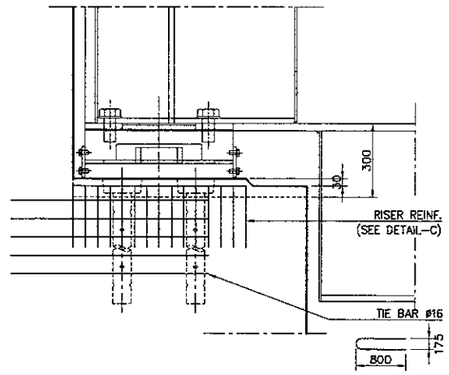

5 — DETAIL AT STOPPER (STEEL)
SCALE : 1:25

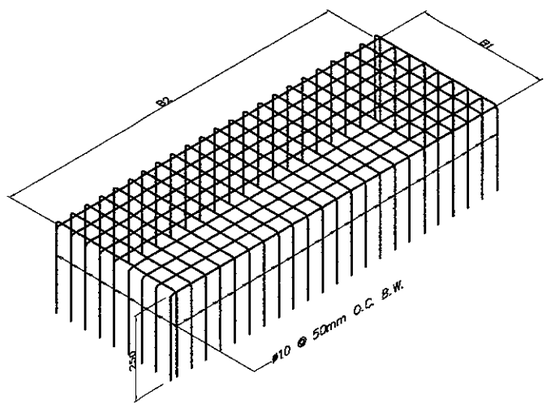

C — RISER REINFORCEMENT
NOT TO SCALE

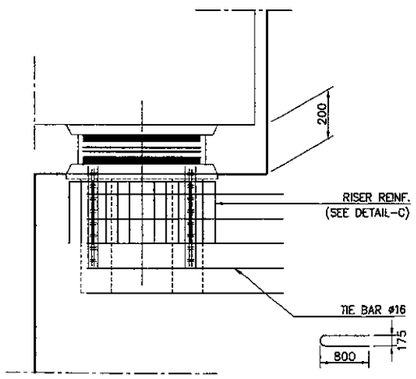

2 — DETAIL AT BEARING (PC)
SCALE : 1:25

SCHEDULE OF RISER REINFORCEMENT & TIE BAR

PIER NO.	PC CONC./ STEEL GIRDER	RISER REINFORCEMENT								TIE BAR			
		BEARING				STOPPER				BEARING		STOPPER	
		LEFT		RIGHT		LEFT		RIGHT		LEFT	RIGHT	LEFT	RIGHT
		B1 (mm)	B2 (mm)	B1 (mm)	B2 (mm)	B1 (mm)	B2 (mm)	B1 (mm)	B2 (mm)	QTY. (PCS.)	QTY. (PCS.)	QTY. (PCS.)	QTY. (PCS.)
P4	PC CONC.	550	550	550	550	500	725	500	725	10	10	15	15
	STEEL GIRDER	700	650	700	650	700	700	700	700	10	10	10	10
P12	PC CONC.	550	550	550	550	500	725	500	725	10	10	15	15
	STEEL GIRDER	700	650	700	650	700	700	700	700	10	10	10	10

NOTE:
ALL METALS SHALL BE HOT-DIPPED GALVANIZED CONFORMING TO LATEST ASTM REQUIREMENTS.

PRINTED: OCT. 18, 2006

JAPAN INTERNATIONAL COOPERATION AGENCY KATAHIRA & ENGINEERS INTERNATIONAL	DESIGNED BY	CHECKED BY	SUBMITTED BY	REPUBLIC OF INDONESIA MINISTRY OF PUBLIC WORKS DIRECTORATE GENERAL OF HIGHWAYS	PROJECT AND LOCATION :	SCALE :	DRAWING TITLE :	DRAWING NO :
	Name: A. GOURLEY	Name: T. OKUMURA	Name: M. KIUCHI		DETAILED DESIGN STUDY OF NORTH JAVA CORRIDOR FLYOVER PROJECT GEBANG FLYOVER - CONTRACT PACKAGE 2 (NAGREG - GEBANG) WEST JAVA PROVINCE	1 : 50	SCHEDULE OF RISER REINF. AND ANCHOR BAR PIER P7 1 OF 2	GSB-036
	Sign	Sign	Sign	APPROVED BY: Ir. HERRY VAZA M.Eng.Sc NIP. : 110038400 — Sign		FULL SIZE A3		SHEET NO : 36 / 56
	Date	Date	Date	Date				

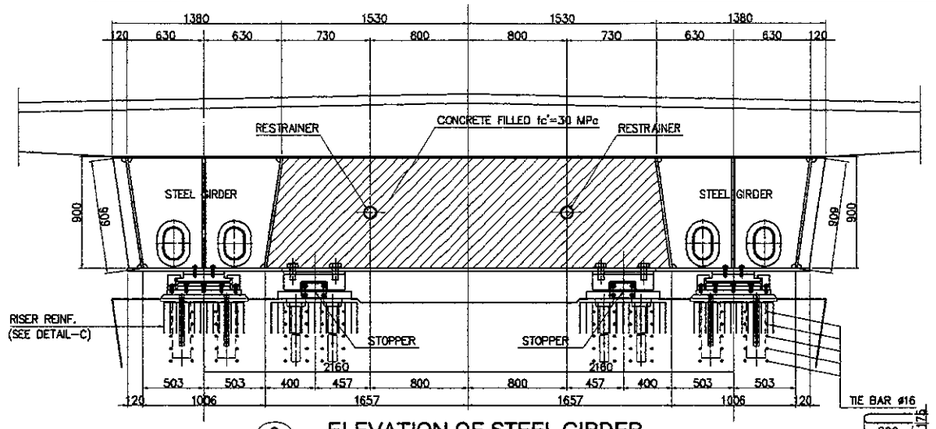

3 ELEVATION OF STEEL GIRDER
SCALE : 1 : 50

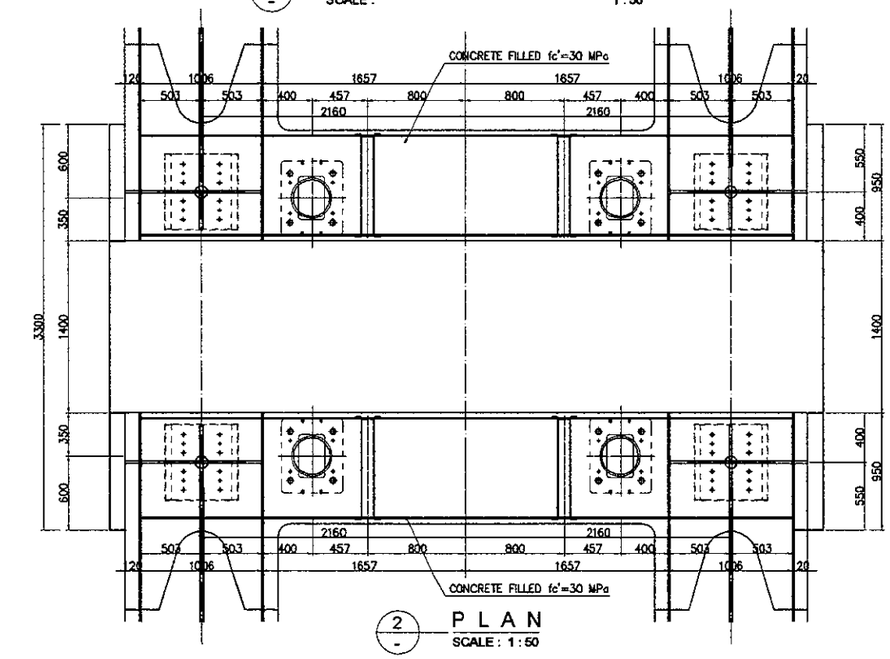

2 P L A N
SCALE : 1 : 50

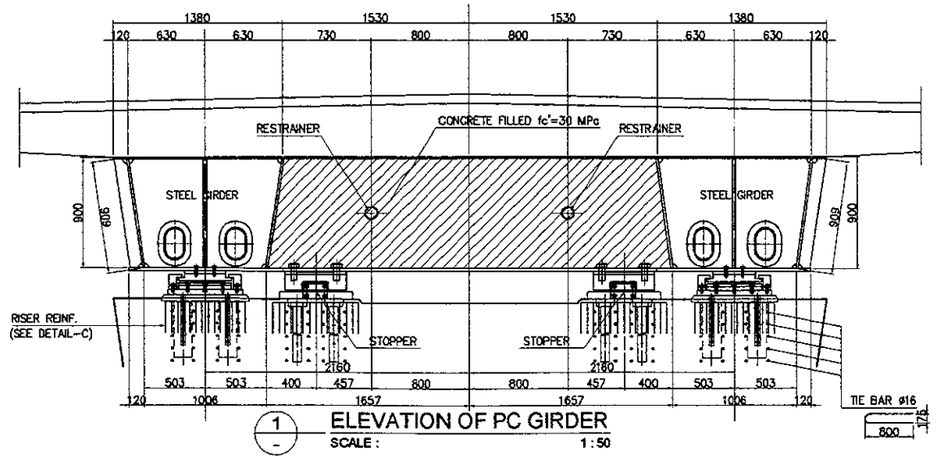

1 ELEVATION OF PC GIRDER
SCALE : 1 : 50

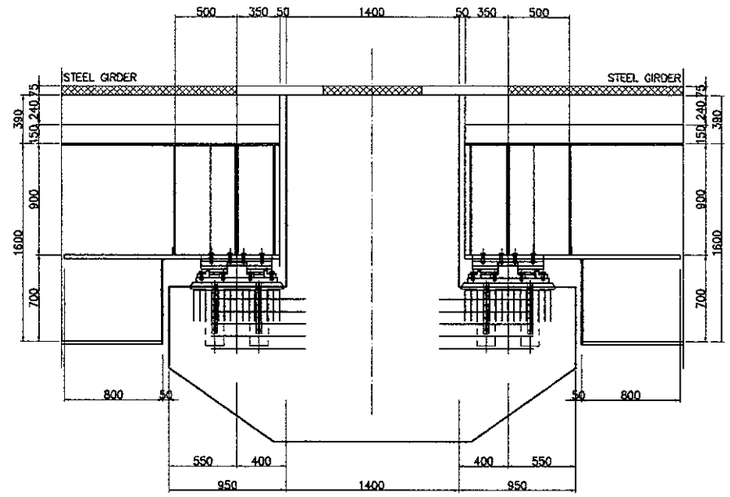

4 SECTION AT BEARING
SCALE : 1:50

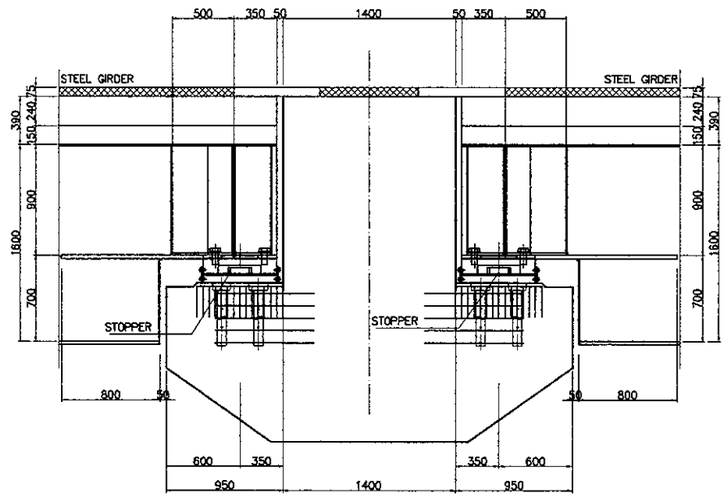

5 SECTION AT STOPPER
SCALE : 1 : 50

JICA JAPAN INTERNATIONAL COOPERATION AGENCY / KEI KATAHIRA & ENGINEERS INTERNATIONAL	DESIGNED BY	CHECKED BY	SUBMITTED BY	REPUBLIC OF INDONESIA MINISTRY OF PUBLIC WORKS DIRECTORATE GENERAL OF HIGHWAYS	PROJECT AND LOCATION :	SCALE :	DRAWING TITLE :	DRAWING NO :
	Name: A. GOURLEY	Name: T. OKUMURA	Name: M. KIUCHI		DETAILED DESIGN STUDY OF NORTH JAVA CORRIDOR FLYOVER PROJECT GEBANG FLYOVER - CONTRACT PACKAGE 2 (NAGREG - GEBANG) WEST JAVA PROVINCE	1 : 10 / 1 : 25 / 1 : 40	SCHEDULE OF RISER REINF. AND ANCHOR BAR PIER P7 2 OF 2	GSB-037
	Sign	Sign	Sign	APPROVED BY: Ir. HERRY VAZA M,Eng.Sc NIP. : 110038400		FULL SIZE A3		SHEET NO : 37 / 56
	Date	Date	Date	Sign / Date				

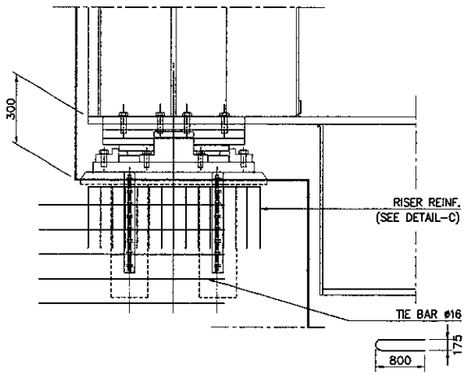

1 - DETAIL AT BEARING (STEEL)
SCALE : 1:25

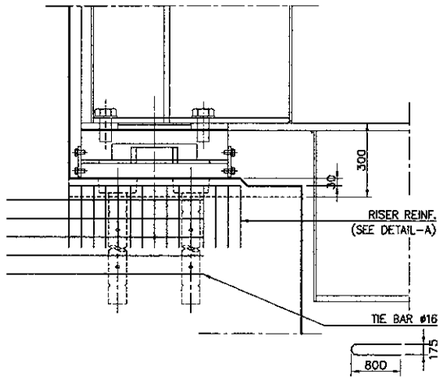

2 - DETAIL AT STOPPER (STEEL)
SCALE : 1:25

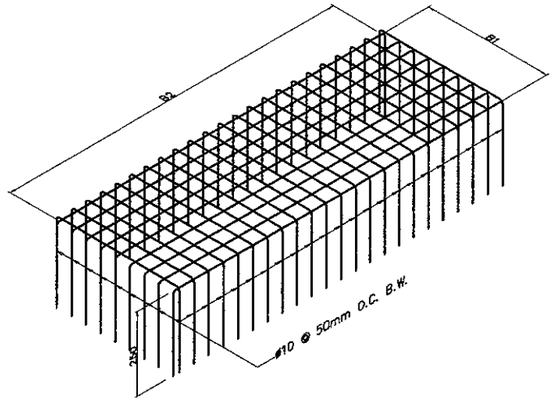

A - RISER REINFORCEMENT
NOT TO SCALE

SCHEDULE OF RISER REINFORCEMENT & TIE BAR

PIER NO.	STEEL GIRDER	RISER REINFORCEMENT								TIE BAR			
		BEARING				STOPPER				BEARING		STOPPER	
		LEFT		RIGHT		LEFT		RIGHT		LEFT	RIGHT	LEFT	RIGHT
		B1 (mm)	B2 (mm)	B1 (mm)	B2 (mm)	B1 (mm)	B2 (mm)	B1 (mm)	B2 (mm)	QTY. (PCS.)	QTY. (PCS.)	QTY. (PCS.)	QTY. (PCS.)
P7	P6 SIDE	700	650	700	650	700	700	700	700	10	10	10	10
	P8 SIDE	700	650	700	650	700	700	700	700	10	10	10	10

NOTE:
ALL METALS SHALL BE HOT-DIPPED GALVANIZED CONFORMING TO LATEST ASTM REQUIREMENTS.

JAPAN INTERNATIONAL COOPERATION AGENCY KATAHIRA & ENGINEERS INTERNATIONAL	DESIGNED BY	CHECKED BY	SUBMITTED BY	REPUBLIC OF INDONESIA MINISTRY OF PUBLIC WORKS DIRECTORATE GENERAL OF HIGHWAYS	PROJECT AND LOCATION :	SCALE :	DRAWING TITLE :	DRAWING NO :
	Name: A. GOURLEY	Name: T. OKUMURA	Name: M. KIUCHI		DETAILED DESIGN STUDY OF NORTH JAVA CORRIDOR FLYOVER PROJECT GEBANG FLYOVER - CONTRACT PACKAGE 2 (NAGREG - GEBANG) WEST JAVA PROVINCE	1 : 40	**CONCRETE BARRIER REINFORCEMENT AT PIER COPING P4 , P7, P12 (EXP)**	GSB-038
	Sign	Sign	Sign	APPROVED BY: Ir. HERRY VAZA M,Eng.Sc NIP. : 110038400				SHEET NO :
	Date	Date	Date	Sign / Date		FULL SIZE A3		38 / 57

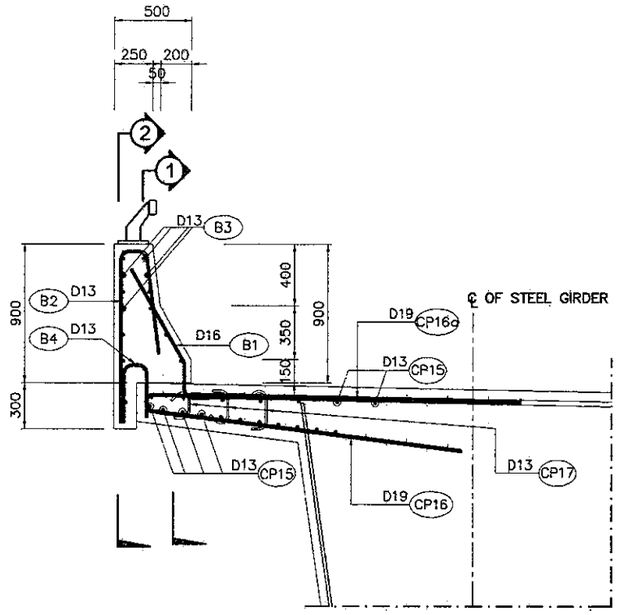

2 ELEVATION
SCALE 1:40

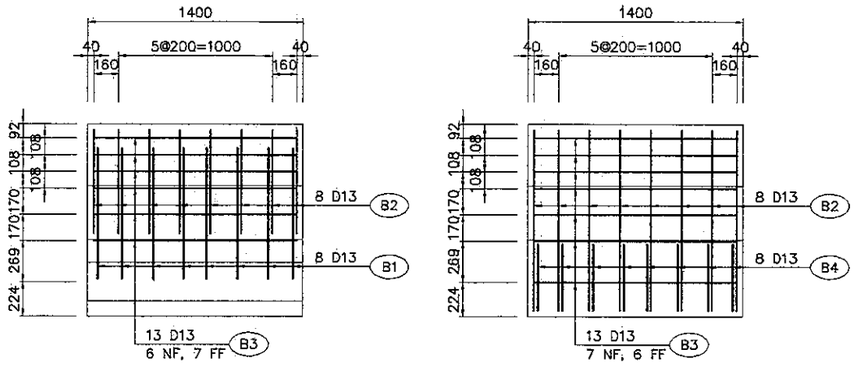

3 SECTION 1-1
SCALE 1:40

4 SECTION 2-2
SCALE 1:40

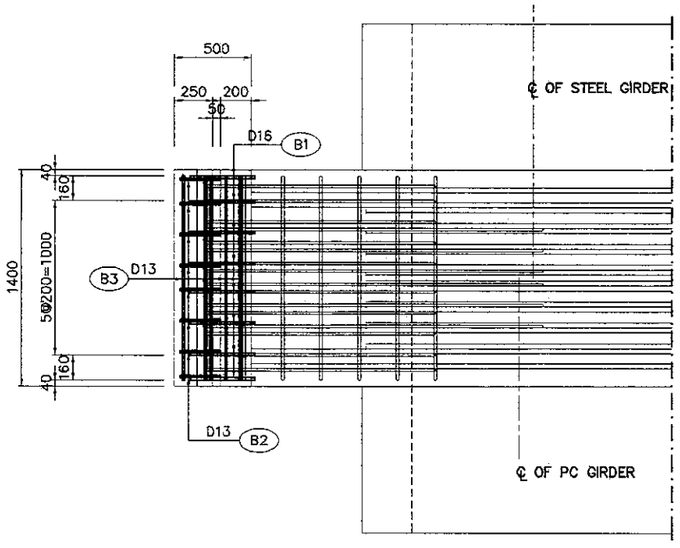

1 PLAN
SCALE 1:40

BAR BENDING DIAGRAM

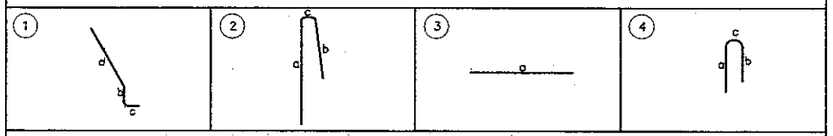

SCHEDULE OF REINFORCEMENT

LOCATION	BAR MARK	SIZE (mm)	BEND TYPE	DIMENSION (mm) OUT TO OUT a	b	c	d	e	f	LENGTH (mm)	NO. REQ'D.	UNIT WEIGHT (kg/m.)	WEIGHT (kg.)	VOLUME OF CONCRETE (cu.m)
BARRIER PIER P4, P7, P12	BARRIER													0.378
	B1	16	1	700	220	150				1070	8	1.58	14	
	B2	13	2	1165	650	145				1950	8	1.04	16	
	B3	13	3	1320						1320	13	1.04	18	
	B4	13	4	420	330	160				910	8	1.04	8	
									TOTAL WEIGHT FOR / BARRIER = 56 Kgs.					

THE REINFORCEMENT SHOWN ON THIS TABLE IS FOR REFERENCE ONLY, THE CONTRACTOR SHOULD CHECKED AND VERIFY ALL DIMENSIONS, SIZES AND QUANTITIES OF REINFORCEMENT.

NOTES :
1. ALL DIMENSION ARE IN MILIMETERS.
2. CONCRETE : fc' = 30 MPa
3. REINFORCING STEEL : YIELD STRENGTH = 390 N/mm2

JAPAN INTERNATIONAL COOPERATION AGENCY KATAHIRA & ENGINEERS INTERNATIONAL	DESIGNED BY	CHECKED BY	SUBMITTED BY	REPUBLIC OF INDONESIA MINISTRY OF PUBLIC WORKS DIRECTORATE GENERAL OF HIGHWAYS	PROJECT AND LOCATION :	SCALE :	DRAWING TITLE :	DRAWING NO :
	Name A. COURLEY	Name T. OKUMURA	Name M. KIUCHI		DETAILED DESIGN STUDY OF NORTH JAVA CORRIDOR FLYOVER PROJECT GEBANG FLYOVER - CONTRACT PACKAGE 2 (NAGREG - GEBANG) WEST JAVA PROVINCE	1 : 80 1 : 50 1 : 10	COMPOSITE COLUMN CASING DETAIL (P5 & P6)	GSB-039
	Sign	Sign	Sign	APPROVED BY Ir. HERRY VAZA M,Eng.Sc NIP. : 110038400		FULL SIZE A3		SHEET NO : 39 / 57
	Date	Date	Date	Sign / Date				

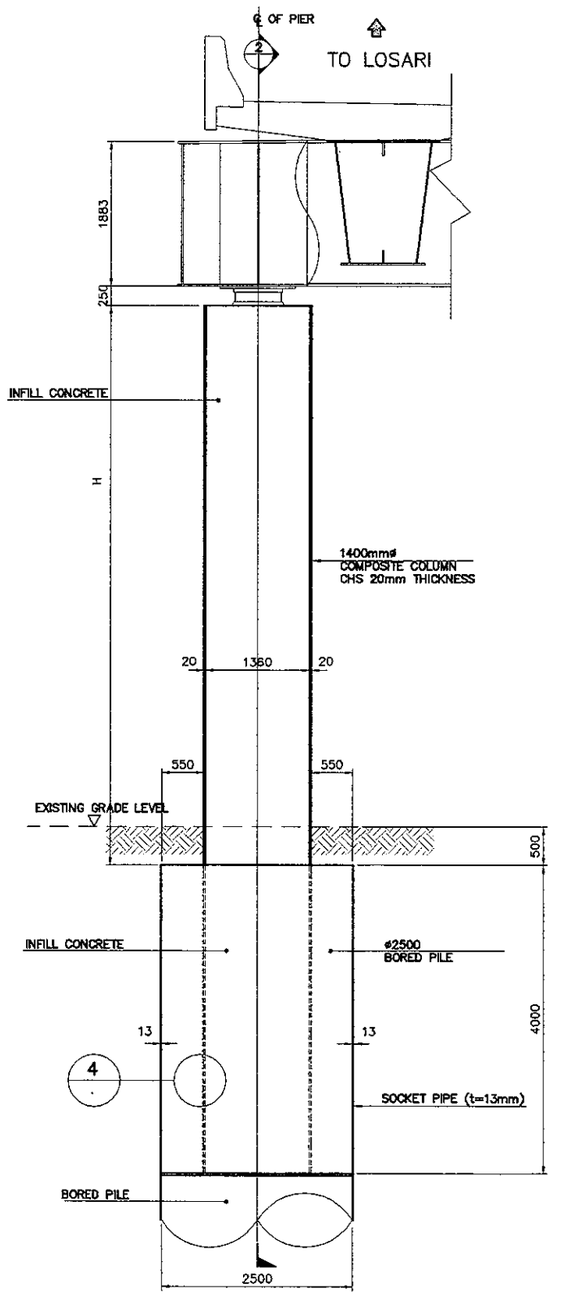

1 ELEVATION
SCALE 1:80

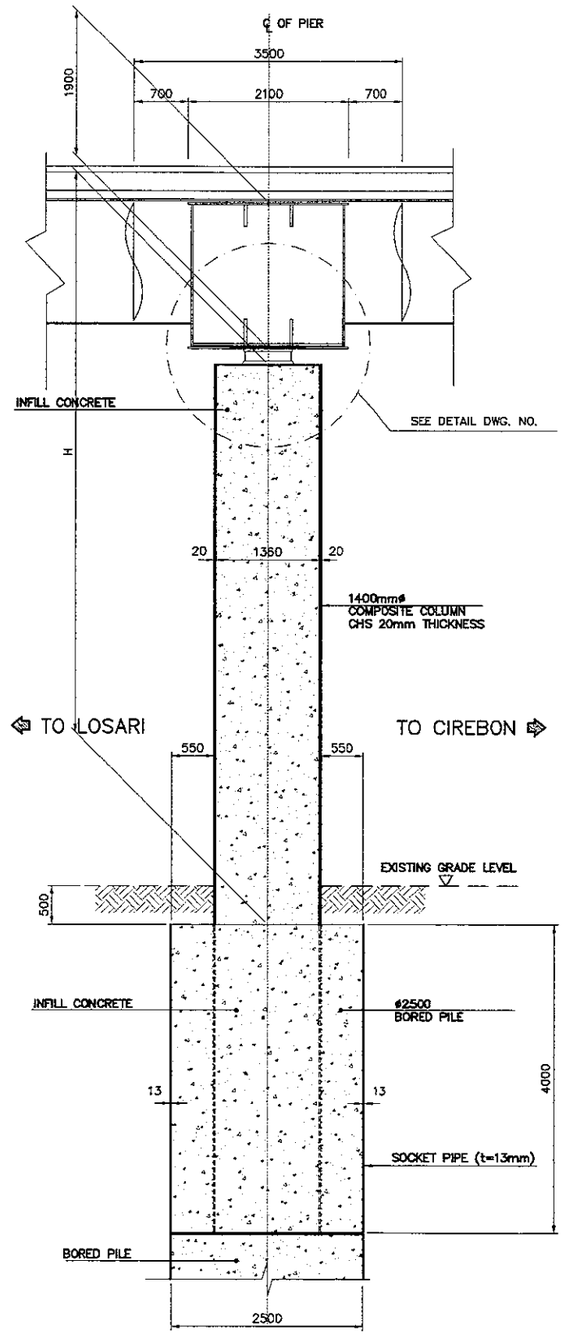

2 SECTION
SCALE 1:80

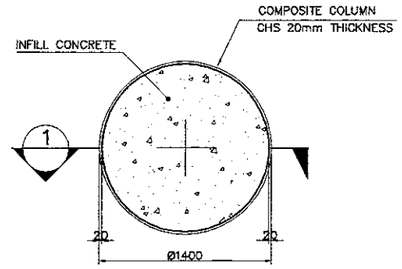

3 SECTION
SCALE 1:50

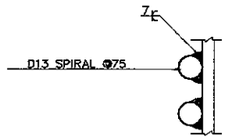

4 DETAIL
SCALE 1:10

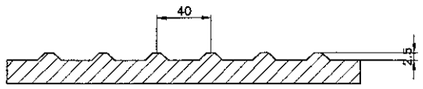

5 INNER RIB DETAIL
NOT TO SCALE

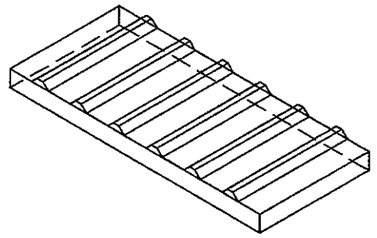

ISOMETRIC VIEW

NOTES :
1. ALL DIMENSIONS ARE IN MILLIMETERS
2. CONCRETE : fc' = 30 MPa
3. REINFORCING STEEL : YIELD STRENGTH = 390 N/mm2

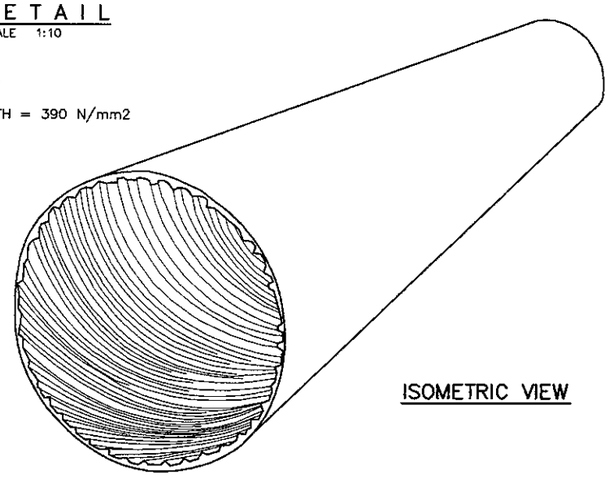

ISOMETRIC VIEW

BAR BENDING DIAGRAM

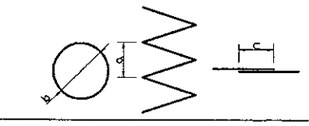

SCHEDULE OF REINFORCEMENT

LOCATION	BAR MARK	SIZE (mm)	BEND TYPE	DIMENSION(mm) OUT TO OUT a	b	c	d	e	f	LENGTH (mm)	NO. REQ'D.	UNIT WEIGHT (kg/m)	WEIGHT (kg)
PIER P5 & P6		13	--	75	1400	450				246410	1	1.04	256
										TOTAL WEIGHT / COLUMN = 256 Kgs.			

CONCRETE VOLUME (m3)	
P5 L	20.178
P5 R	19.970
P6 L	20.175
P6 R	19.963

PIER NO.	DIMENSION(mm) OUT TO OUT NO. OF PCS.	HEIGHT (H)	DIAMETER (MM)*	THICKNESS (MM)	TOTAL LENGTH	REMARKS
P5 L	1	9890	1400	20	13890	CORRUGATED
P5 R	1	9747	1400	20	13747	CORRUGATED
P6 L	1	9888	1400	20	13888	CORRUGATED
P6 R	1	9742	1400	20	13742	CORRUGATED

* OUTSIDE DIAMETER OF COMPOSITE COLUMN

COMPOSITE COLUMN CASING DETAIL (P5, P6)
SCALE AS SHOWN

PRINTED: OCT. 18, 2006

JAPAN INTERNATIONAL COOPERATION AGENCY KATAHIRA & ENGINEERS INTERNATIONAL	DESIGNED BY	CHECKED BY	SUBMITTED BY	REPUBLIC OF INDONESIA MINISTRY OF PUBLIC WORKS DIRECTORATE GENERAL OF HIGHWAYS	PROJECT AND LOCATION :	SCALE :	DRAWING TITLE :	DRAWING NO :
	Name: A. GOURLEY	Name: T. OKUMURA	Name: M. KIUCHI		DETAILED DESIGN STUDY OF NORTH JAVA CORRIDOR FLYOVER PROJECT GEBANG FLYOVER - CONTRACT PACKAGE 2 (NAGREG - GEBANG) WEST JAVA PROVINCE	1 : 10 1 : 50 1 : 80	COMPOSITE COLUMN CASING DETAIL (P8)	GSB-040
	Sign	Sign	Sign	APPROVED BY: Ir. HERRY VAZA M,Eng.Sc NIP. : 110038400				SHEET NO :
	Date	Date	Date	Sign / Date		FULL SIZE A3		40 / 57

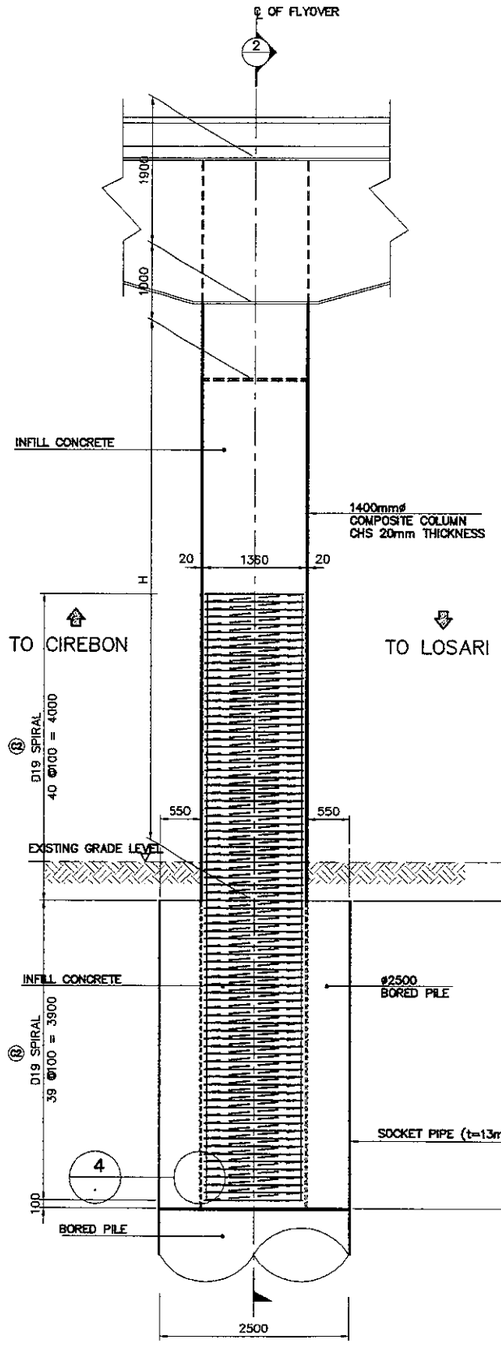

1 ELEVATION
SCALE 1:80

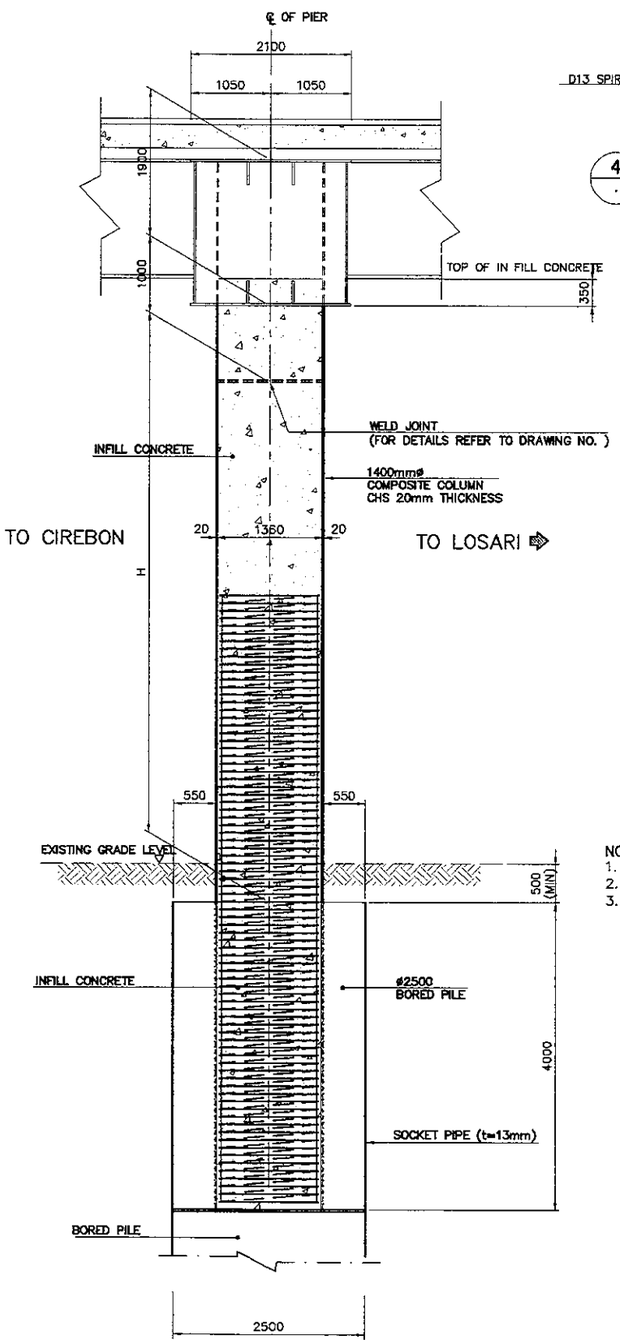

2 SECTION
SCALE 1:80

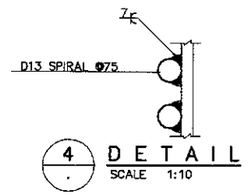

4 DETAIL
SCALE 1:10

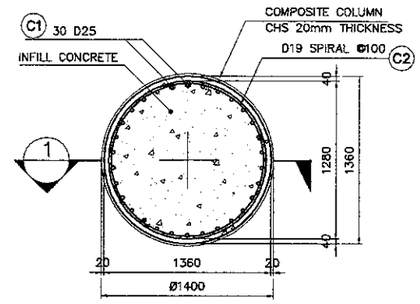

3 SECTION
SCALE 1:50

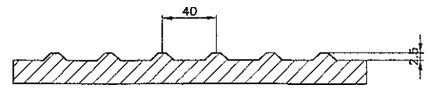

5 INNER RIB DETAIL
NOT TO SCALE

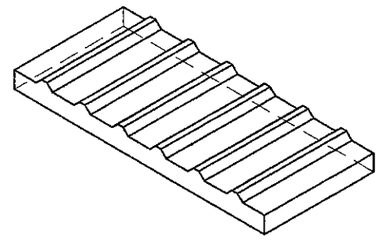

ISOMETRIC VIEW

CONCRETE VOLUME (m3)	
P8	17.553

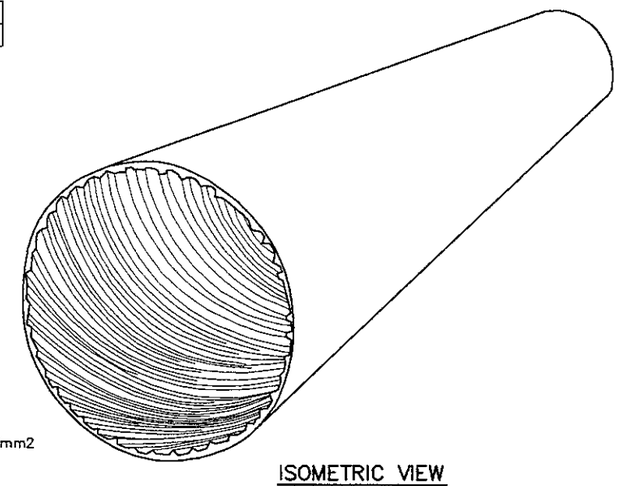

ISOMETRIC VIEW

NOTES :
1. ALL DIMENSIONS ARE IN MILLIMETERS
2. CONCRETE : fc' = 30 MPa
3. REINFORCING STEEL : YIELD STRENGTH = 390 N/mm2

BAR BENDING DIAGRAM

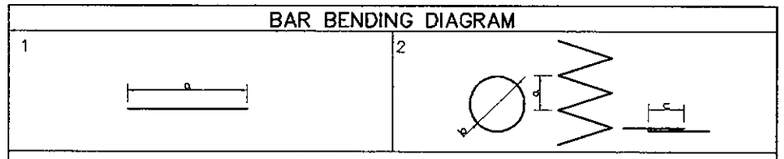

SCHEDULE OF REINFORCEMENT

LOCATION	BAR MARK	SIZE (mm)	BEND TYPE	DIMENSION(mm) OUT TO OUT a	b	c	d	e	f	LENGTH (mm)	NO. REQ'D.	UNIT WEIGHT (kg/m)	WEIGHT (kg)
PIER, P8	OUTSIDE OF COLUMN												
		13	2	75	1400	450				246410	1	1.04	256
										TOTAL WEIGHT / COLUMN = 256 Kgs.			
	INSIDE OF COLUMN												
	C1	25	1	7900						7900	30	3.85	912
	C2	19	2	100	1280	450				333763	1	2.23	744
										TOTAL WEIGHT / COLUMN = 1,656 Kgs.			

PIER NO.	DIMENSION(mm) OUT TO OUT NO. OF PCS.	HEIGHT (H)	DIAMETER (MM)*	THICKNESS (MM)	TOTAL LENGTH	REMARKS
P8	1	6733	1400	20	10733	CORRUGATED

* OUTSIDE DIAMETER OF COMPOSITE COLUMN

COMPOSITE COLUMN CASING DETAIL (P8)
SCALE AS SHOWN

PRINTED: OCT. 18, 2006

JAPAN INTERNATIONAL COOPERATION AGENCY KATAHIRA & ENGINEERS INTERNATIONAL	DESIGNED BY	CHECKED BY	SUBMITTED BY	REPUBLIC OF INDONESIA MINISTRY OF PUBLIC WORKS DIRECTORATE GENERAL OF HIGHWAYS	PROJECT AND LOCATION :	SCALE :	DRAWING TITLE :	DRAWING NO :
	Name: A. GOURLEY	Name: T. OKUMURA	Name: M. KIUCHI		DETAILED DESIGN STUDY OF NORTH JAVA CORRIDOR FLYOVER PROJECT GEBANG FLYOVER - CONTRACT PACKAGE 2 (NAGREG - GEBANG) WEST JAVA PROVINCE	1 : 10 1 : 50 1 : 80	**COMPOSITE COLUMN CASING DETAIL** **(P9, P10 & P11)**	GSB-041
	Sign	Sign	Sign	APPROVED BY: Ir. HERRY VAZA M,Eng.Sc NIP. : 110038400		FULL SIZE A3		SHEET NO : 41 / 57
	Date	Date	Date	Sign / Date				

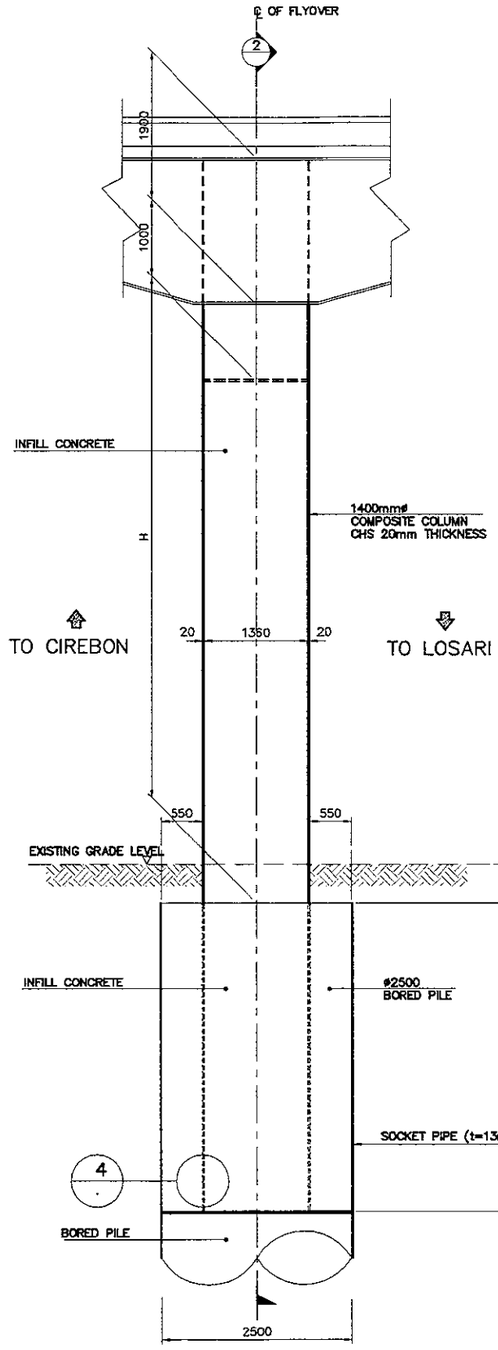

1 ELEVATION
SCALE 1:80

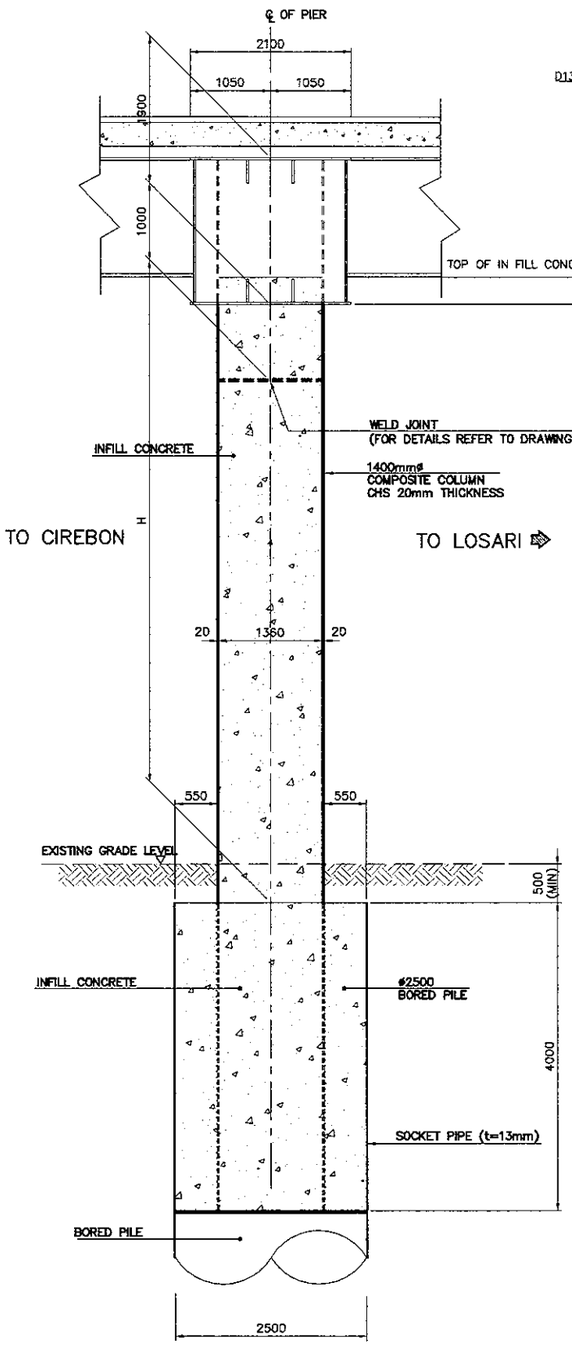

2 SECTION
SCALE 1:80

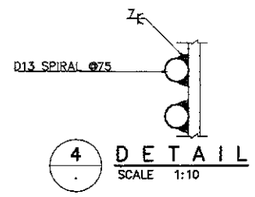

4 DETAIL
SCALE 1:10

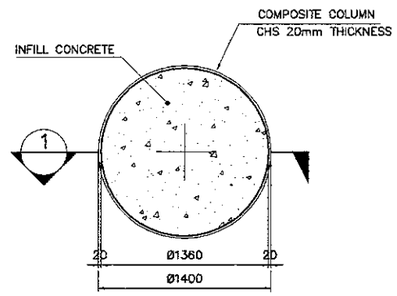

3 SECTION
SCALE 1:50

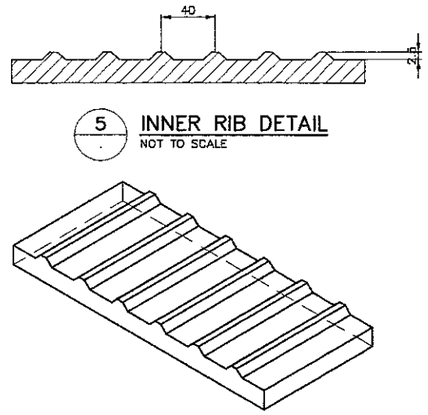

5 INNER RIB DETAIL
NOT TO SCALE

ISOMETRIC VIEW

CONCRETE VOLUME (m3)	
P9	17.139
P10	17.130
P11	17.066

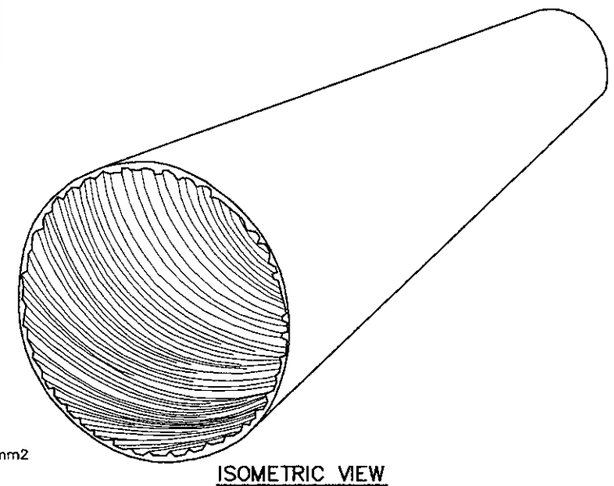

ISOMETRIC VIEW

NOTES :
1. ALL DIMENSIONS ARE IN MILLIMETERS
2. CONCRETE : fc' = 30 MPa
3. REINFORCING STEEL : YIELD STRENGTH = 390 N/mm2

BAR BENDING DIAGRAM

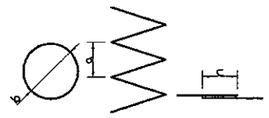

SCHEDULE OF REINFORCEMENT

LOCATION	BAR MARK	SIZE (mm)	BEND TYPE	DIMENSION(mm) OUT TO OUT a	b	c	d	e	f	LENGTH (mm)	NO. REQ'D.	UNIT WEIGHT (kg/m)	WEIGHT (kg)
PIER P9,P10&P11		13	–	75	1400	450				246410	1	1.04	256
										TOTAL WEIGHT / COLUMN = 256 Kgs.			

PIER NO.	DIMENSION(mm) OUT TO OUT: NO. OF PCS.	HEIGHT (H)	DIAMETER (MM)*	THICKNESS (MM)	TOTAL LENGTH	REMARKS
P9	1	6448	1400	20	10448	CORRUGATED
P10	1	6442	1400	20	10442	CORRUGATED
P11	1	6396	1400	20	10398	CORRUGATED

* OUTSIDE DIAMETER OF COMPOSITE COLUMN

COMPOSITE COLUMN CASING DETAIL (P9, P10 & P11)
SCALE AS SHOWN

PRINTED: OCT. 18, 2006

JAPAN INTERNATIONAL COOPERATION AGENCY KATAHIRA & ENGINEERS INTERNATIONAL	DESIGNED BY	CHECKED BY	SUBMITTED BY	REPUBLIC OF INDONESIA MINISTRY OF PUBLIC WORKS DIRECTORATE GENERAL OF HIGHWAYS	PROJECT AND LOCATION :	SCALE :	DRAWING TITLE :	DRAWING NO :
	Name A. GOURLEY	Name T. OKUMURA	Name M. KIUCHI		DETAILED DESIGN STUDY OF NORTH JAVA CORRIDOR FLYOVER PROJECT GEBANG FLYOVER - CONTRACT PACKAGE 2 (NAGREG - GEBANG) WEST JAVA PROVINCE	1 : 10 1 : 50	COMPOSITE COLUMN SOCKET TYPE CONNECTION (PIER P5 & P6)	GSB-042
	Sign	Sign	Sign	APPROVED BY Ir. HERRY VAZA M,Eng.Sc NIP. : 110038400 Sign				SHEET NO :
	Date	Date	Date	Date		FULL SIZE A3		42 / 57

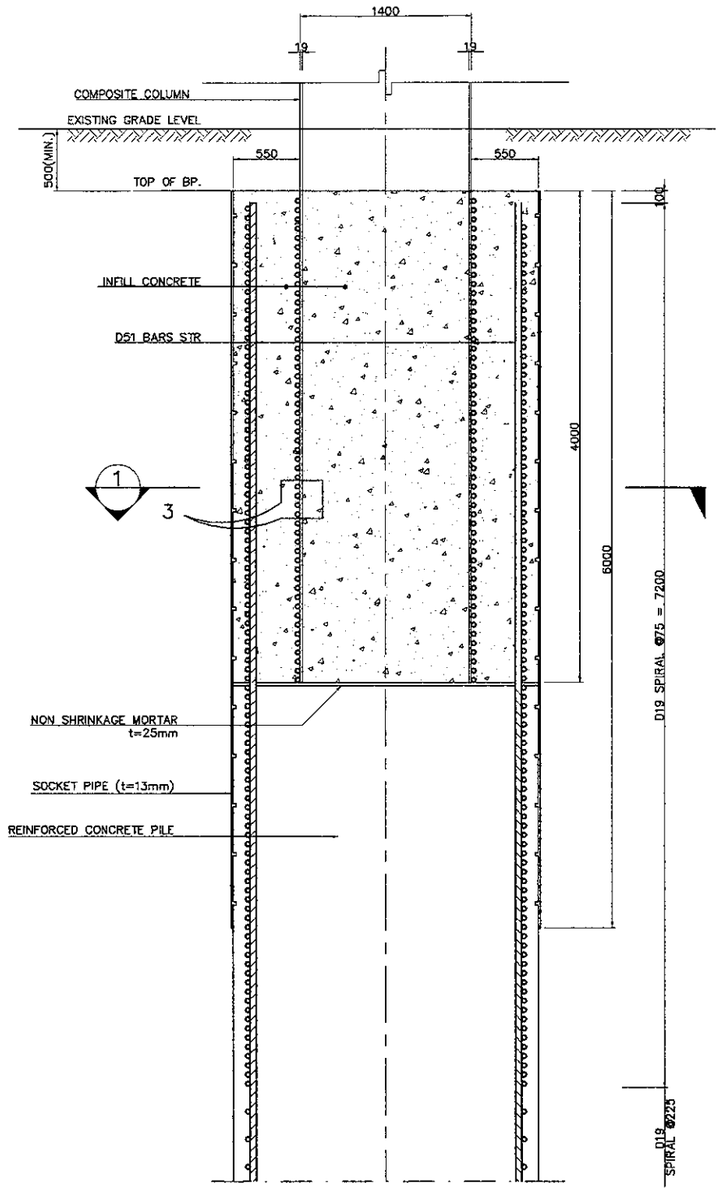

A SECTION
SCALE 1:50

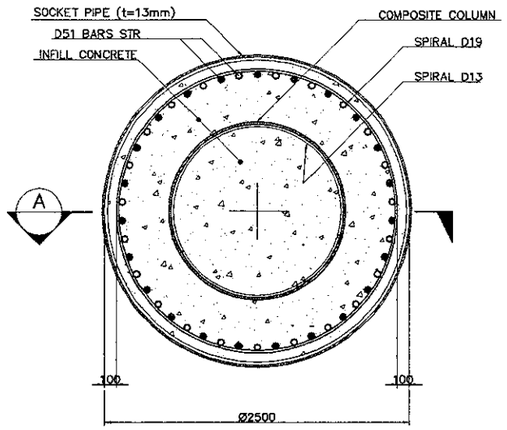

1 SECTION
SCALE 1:50

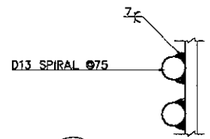

3 DETAIL
SCALE 1:10

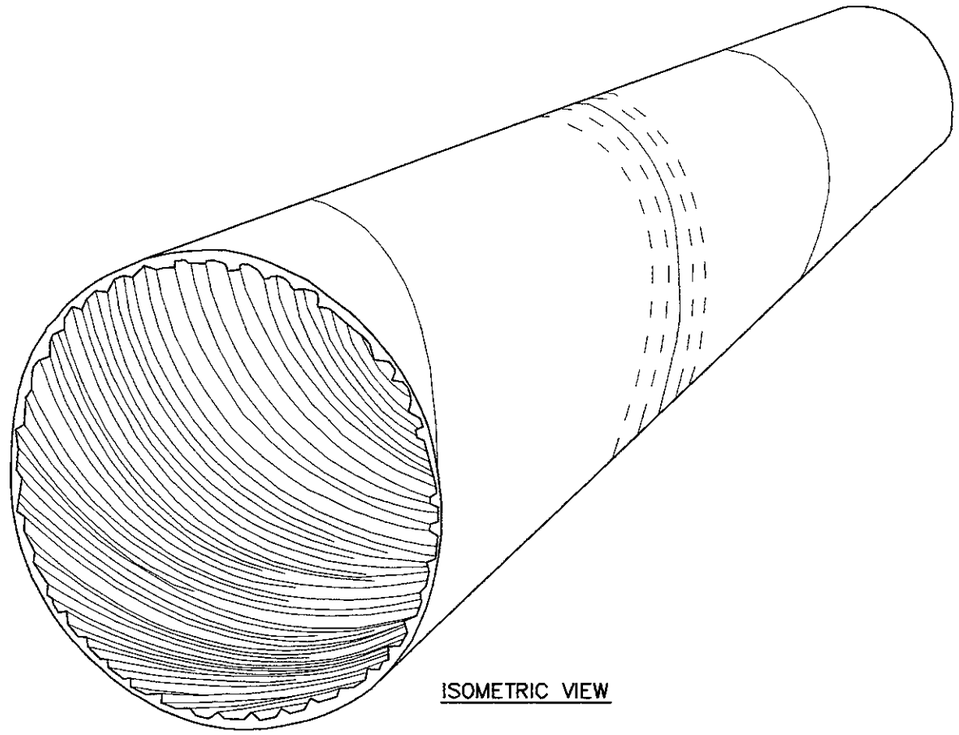

ISOMETRIC VIEW

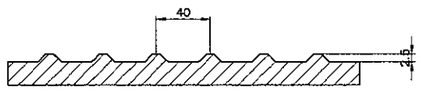

4 INNER RIB DETAIL
NOT TO SCALE

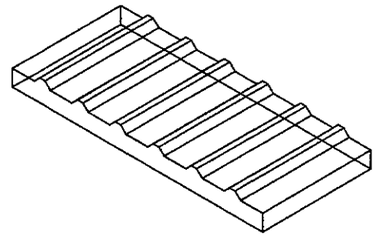

ISOMETRIC VIEW

PIER NO.	DIMENSION(mm) OUT TO OUT				REMARKS
	NO. OF PCS.	LENGTH (M)	DIAMETER (MM)*	THICKNESS (MM)	
P5	2	6	2500	13	CORRUGATED
P6	2	6	2500	13	CORRUGATED

* OUTSIDE DIAMETER OF CONCRETE PILE CAST-IN DRILLED HOLE

NOTES :
1. ALL DIMENSION ARE IN MILIMETERS.

COMPOSITE COLUMN SOCKET TYPE CONNECTION (PIER P5 & P6)
SCALE AS SHOWN

JAPAN INTERNATIONAL COOPERATION AGENCY / KATAHIRA & ENGINEERS INTERNATIONAL	DESIGNED BY	CHECKED BY	SUBMITTED BY	REPUBLIC OF INDONESIA MINISTRY OF PUBLIC WORKS DIRECTORATE GENERAL OF HIGHWAYS	PROJECT AND LOCATION :	SCALE :	DRAWING TITLE :	DRAWING NO :
	Name: A. GOURLEY	Name: T. OKUMURA	Name: M. KIUCHI		DETAILED DESIGN STUDY OF NORTH JAVA CORRIDOR FLYOVER PROJECT GEBANG FLYOVER - CONTRACT PACKAGE 2 (NAGREG - GEBANG) WEST JAVA PROVINCE	1 : 10 / 1 : 50	COMPOSITE COLUMN SOCKET TYPE CONNECTION (PIER P8)	GSB-043
	Sign	Sign	Sign	APPROVED BY: Ir. HERRY VAZA M,Eng.Sc				SHEET NO :
	Date	Date	Date	NIP. : 110038400		FULL SIZE A3		43 / 57

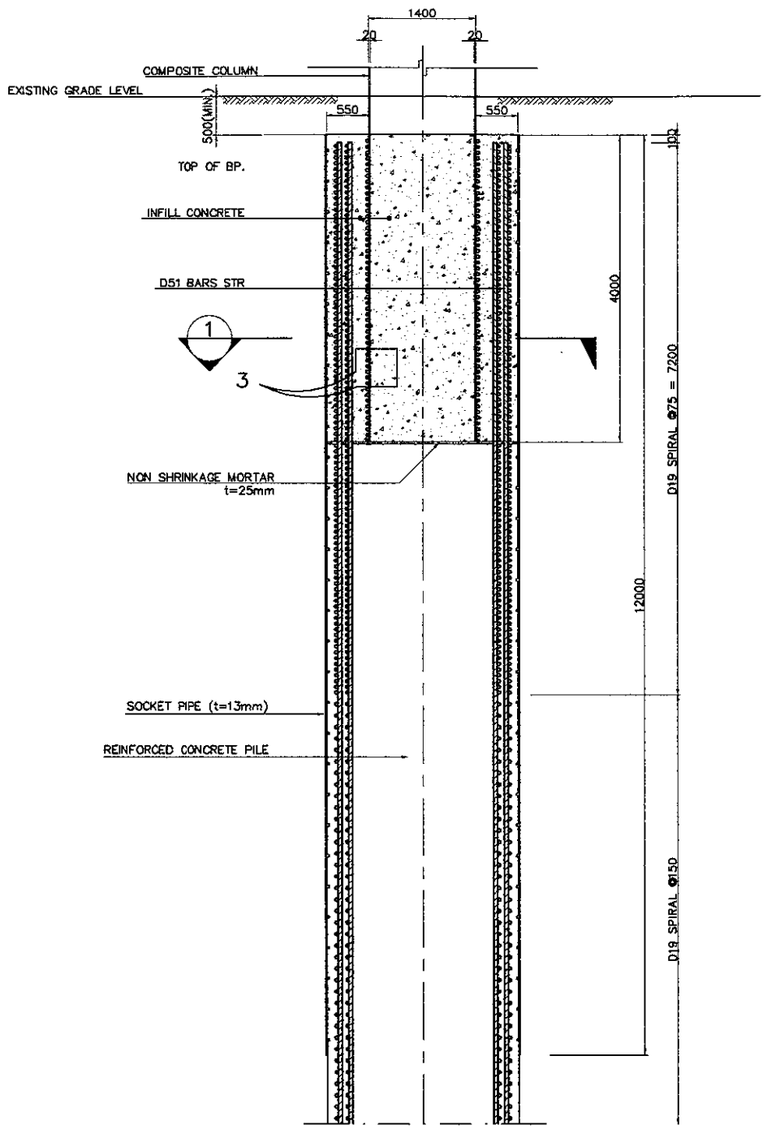

A SECTION
SCALE 1:50

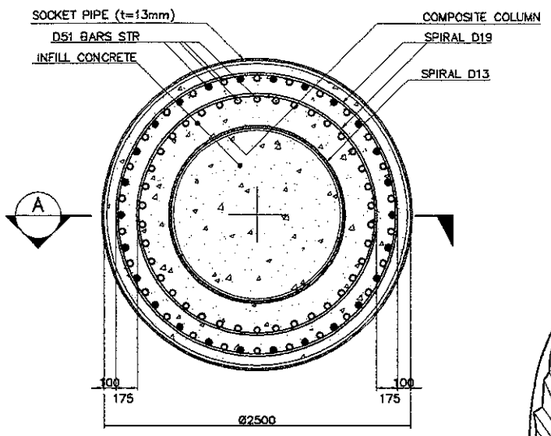

1 SECTION
SCALE 1:50

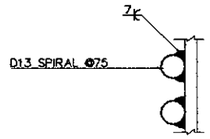

3 DETAIL
SCALE 1:10

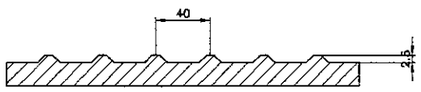

4 INNER RIB DETAIL
NOT TO SCALE

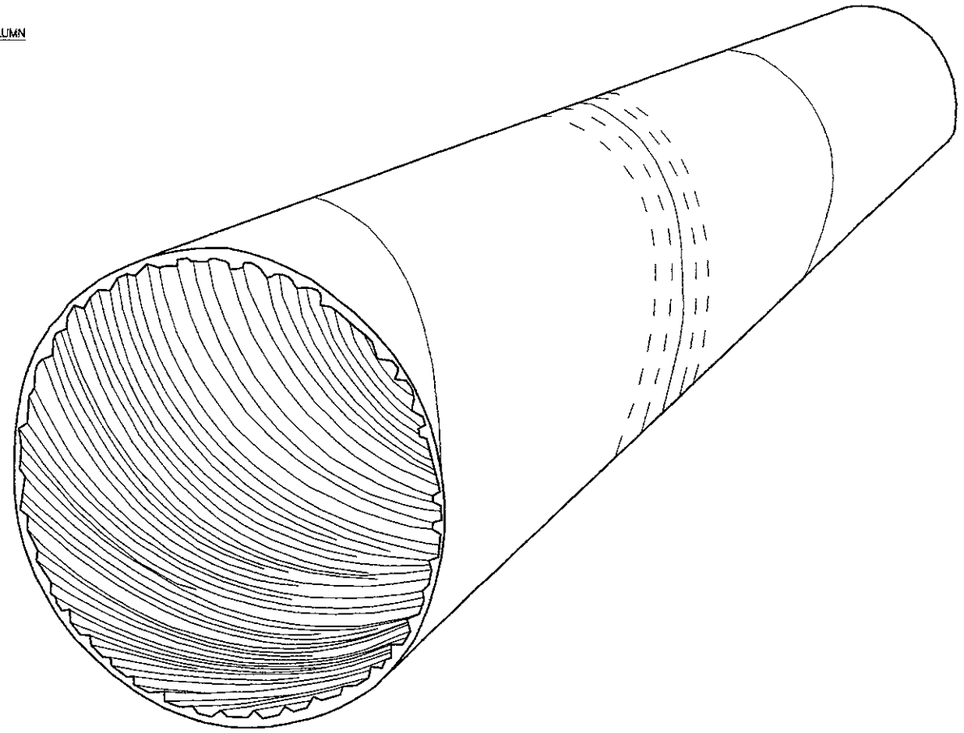

ISOMETRIC VIEW

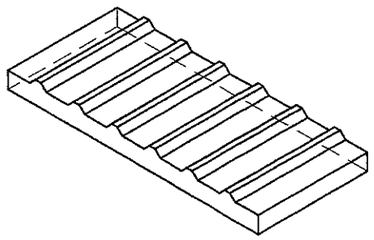

ISOMETRIC VIEW

PIER NO.	DIMENSION(mm) OUT TO OUT				REMARKS
	NO. OF PCS.	LENGTH (M)	DIAMETER (MM)*	THICKNESS (MM)	
P8	1	6	2500	13	CORRUGATED

* OUTSIDE DIAMETER OF CONCRETE PILE CAST-IN DRILLED HOLE

NOTES :
1. ALL DIMENSION ARE IN MILIMETERS.

COMPOSITE COLUMN SOCKET TYPE CONNECTION (PIER P8)
SCALE AS SHOWN

JAPAN INTERNATIONAL COOPERATION AGENCY KATAHIRA & ENGINEERS INTERNATIONAL	DESIGNED BY	CHECKED BY	SUBMITTED BY	REPUBLIC OF INDONESIA MINISTRY OF PUBLIC WORKS DIRECTORATE GENERAL OF HIGHWAYS	PROJECT AND LOCATION :	SCALE :	DRAWING TITLE :	DRAWING NO :
	Name: A. GOURLEY	Name: T. OKUMURA	Name: M. KIUCHI		DETAILED DESIGN STUDY OF NORTH JAVA CORRIDOR FLYOVER PROJECT GEBANG FLYOVER - CONTRACT PACKAGE 2 (NAGREG - GEBANG) WEST JAVA PROVINCE	1 : 10 1 : 50 1 : 80	COMPOSITE COLUMN SOCKET TYPE CONNECTION (PIER P9, P10 & P11)	GSB-044
	Sign	Sign	Sign	APPROVED BY: Ir. HERRY VAZA M,Eng.Sc				SHEET NO :
	Date	Date	Date	NIP. : 110038400 / Sign / Date		FULL SIZE A3		44 / 57

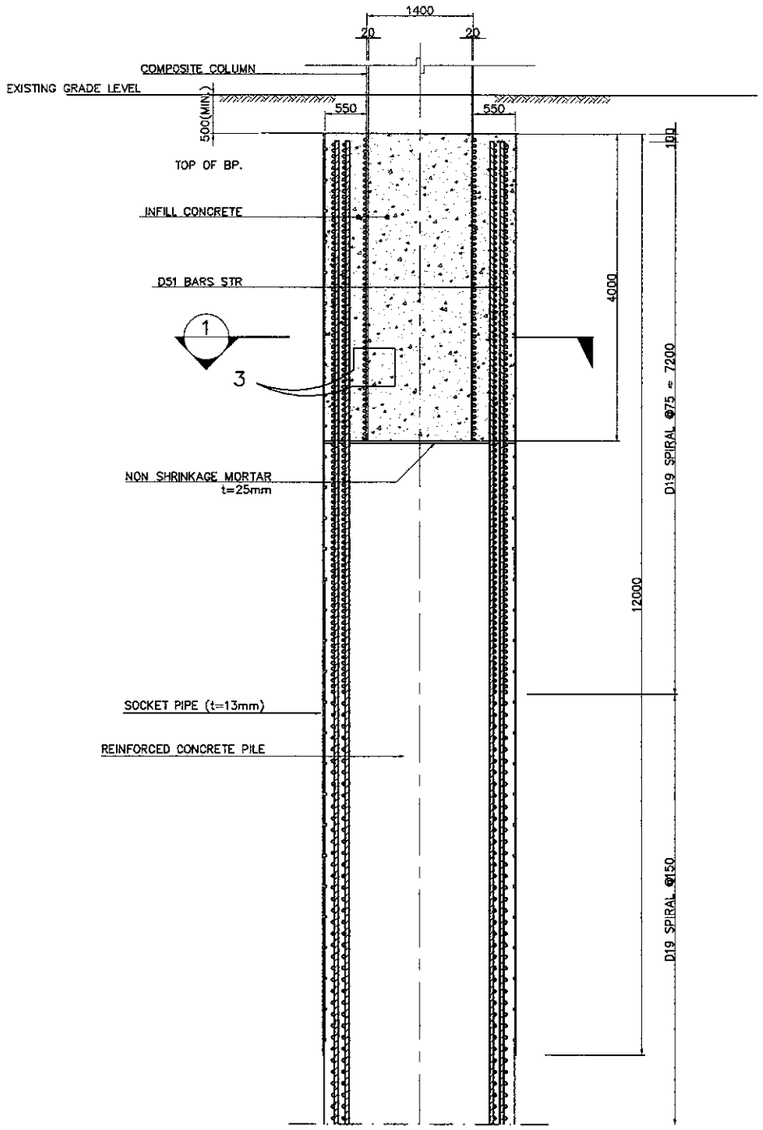

A SECTION
SCALE 1:80

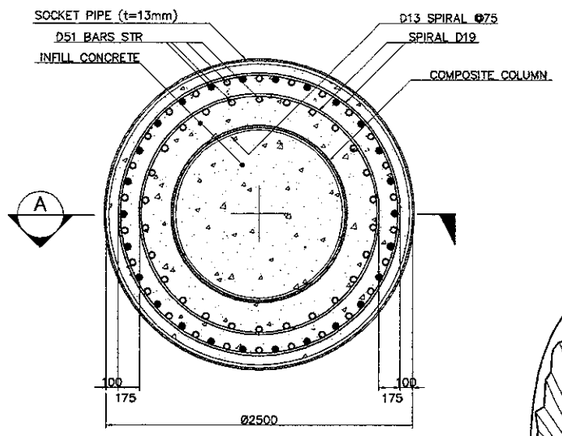

1 SECTION
SCALE 1:50

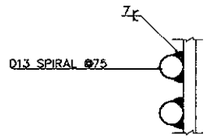

3 DETAIL
SCALE 1:10

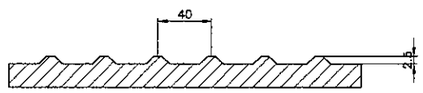

4 INNER RIB DETAIL
NOT TO SCALE

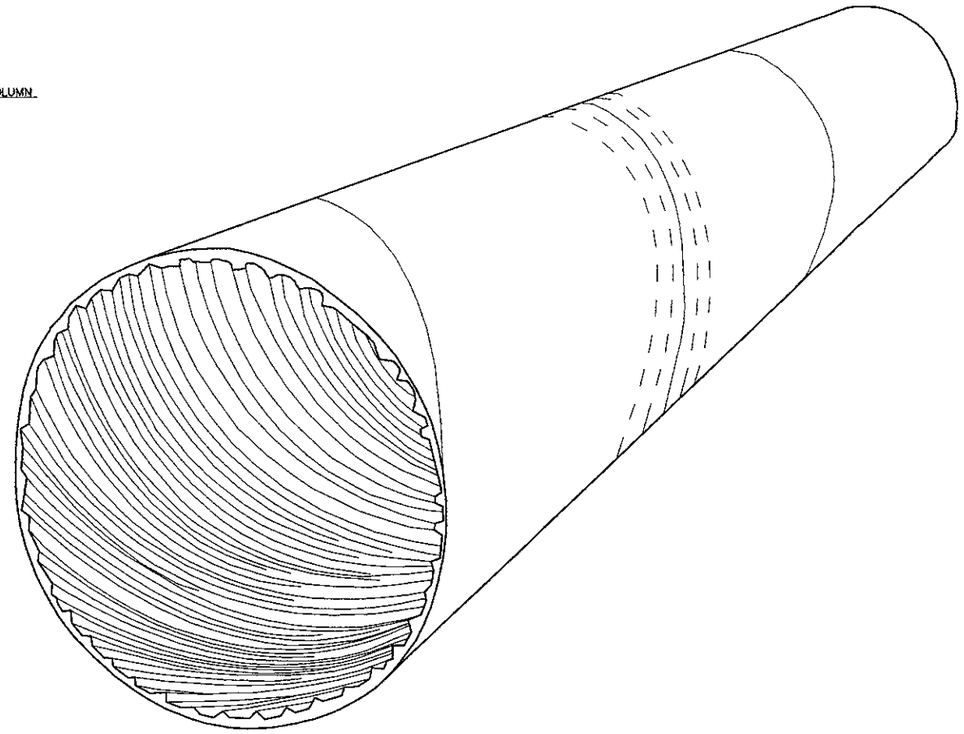

ISOMETRIC VIEW

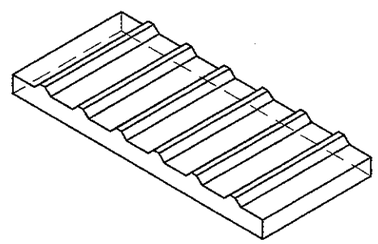

ISOMETRIC VIEW

PIER NO.	DIMENSION(mm) OUT TO OUT				REMARKS
	NO. OF PCS.	LENGTH (M)	DIAMETER (MM)*	THICKNESS (MM)	
P9	1	6	2500	13	CORRUGATED
P10	1	6	2500	13	CORRUGATED
P11	1	6	2500	13	CORRUGATED

* OUTSIDE DIAMETER OF CONCRETE PILE CAST-IN DRILLED HOLE

NOTES :
1. ALL DIMENSION ARE IN MILIMETERS.

COMPOSITE COLUMN SOCKET TYPE CONNECTION (PIER P9, P10 & P11)
SCALE AS SHOWN

PRINTED: OCT. 18, 2006

JAPAN INTERNATIONAL COOPERATION AGENCY KATAHIRA & ENGINEERS INTERNATIONAL	DESIGNED BY	CHECKED BY	SUBMITTED BY	REPUBLIC OF INDONESIA MINISTRY OF PUBLIC WORKS DIRECTORATE GENERAL OF HIGHWAYS	PROJECT AND LOCATION :	SCALE :	DRAWING TITLE :	DRAWING NO :
	Name: A. GOURLEY	Name: T. OKUMURA	Name: M. KIUCHI		DETAILED DESIGN STUDY OF NORTH JAVA CORRIDOR FLYOVER PROJECT GEBANG FLYOVER - CONTRACT PACKAGE 2 (NAGREG - GEBANG) WEST JAVA PROVINCE	1 : 50 1 : 100	**BORED PILE REINF. DETAILS** (PIER P1)	GSB-045
	Sign	Sign	Sign	APPROVED BY: Ir. HERRY VAZA M,Eng.Sc NIP. : 110038400		FULL SIZE A3		SHEET NO : 45 / 57
	Date	Date	Date	Sign / Date				

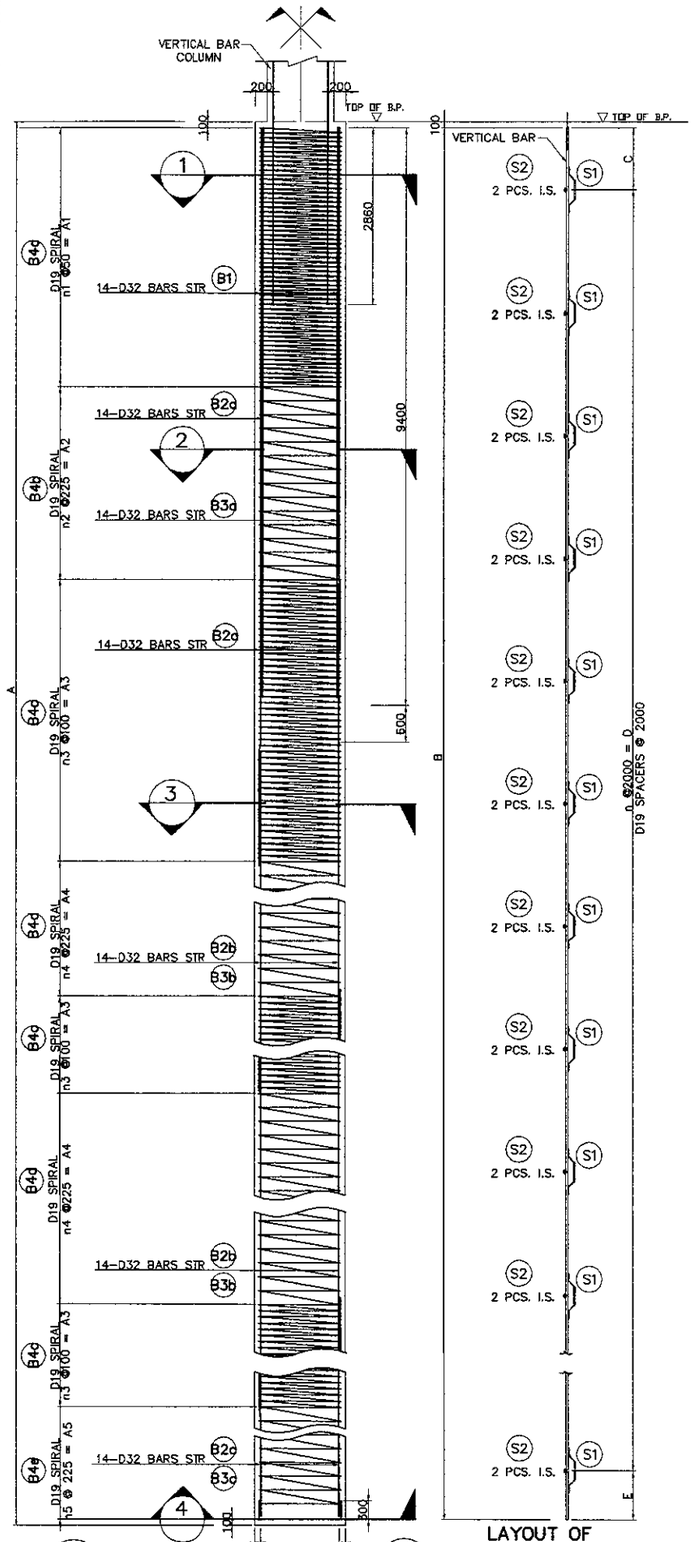

A SECTION
SCALE 1:50

B LAYOUT OF STIFFENER/SPACER
SCALE 1:100

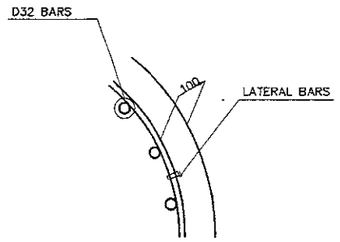

E TYPICAL BAR LAYOUT DETAIL
NOT TO SCALE

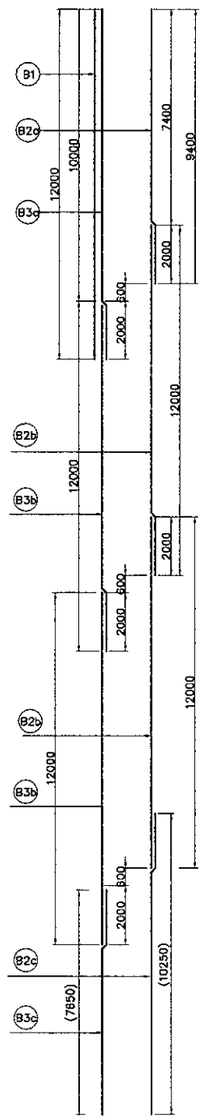

F SCHEMATIC DETAIL
NOT TO SCALE

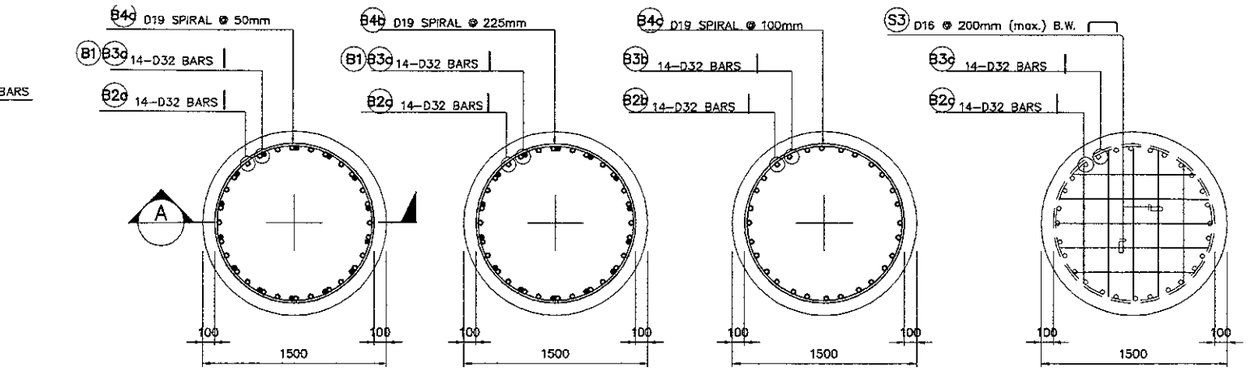

1 SECTION
SCALE 1:50

2 SECTION
SCALE 1:50

3 SECTION
SCALE 1:50

4 SECTION
SCALE 1:50

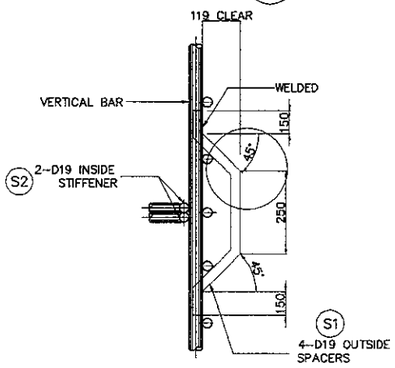

C DETAIL OF STIFFENER/SPACER
NOT TO SCALE

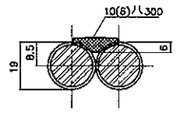

SECTION-D1
SINGLE FLARED-V-GROOVE WELD

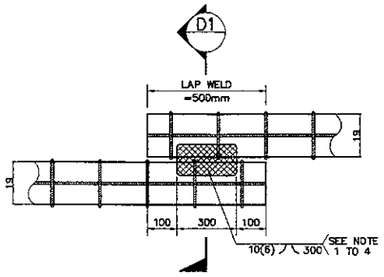

DIRECT LAP JOINT WITH BARS IN CONTACT

D DETAIL OF SPIRAL REINF. FULL LAP-WELD CONNECTION
NOT TO SCALE

NOTES ON LAP-WELD CONNECTION :

1. SPIRAL REINFORCEMENT ARE LAP-WELD CONNECTED (FLARED-V-GROOVE TYPE)
2. WELDING SHOULD CONFORM TO AWS (D1.4) *STRUCTURAL WELDING CODE REINFORCED STEEL.*
3. USE ELECTRODE E90XX.
4. CARE SHOULD BE TAKEN NOT TO DAMAGE THE COLUMN MAIN BARS DURING WELDING.

NOTES :

1. ALL DIMENSIONS ARE IN MILIMETERS.
2. BORED PILE MAIN BARS ARE PROVIDED WITHOUT ANY SPLICE. HOWEVER SPLICING OF MAIN BARS BY MECHANICAL COUPLERS ARE ALLOWED WITH PERMISSION FROM THE STRUCTURAL ENGINEER.
3. CONCRETE : Fc' = 30MPa
4. REINFORCING STEEL=
   D51 : YIELD STRENGTH = 345 N/mm2
   OTHERS : YIELD STRENGTH = 390 N/mm2

BORED PILE TYPE		BP-GF1
SIZE (mm)		D1500
MAIN BARS	SIZE (mm)	32
	NO. OF LAYERS	1.0
	NO. OF PCS.	42
SPIRAL	SIZE (mm)	19
	NO. / SET	

DIMENSION						
LOCATION	A (mm)	B (mm)	C (mm)	D (mm)	E (mm)	n
P1	38000	37800	1000	38000	800	18

DIMENSION										
LOCATION	A1 (mm)	A2 (mm)	A3 (mm)	A4 (mm)	A5 (mm)	n1	n2	n3	n4	n5
P1	4200	3150	4600	5400	5850	56	14	48	24	26

BAR BENDING DIAGRAM

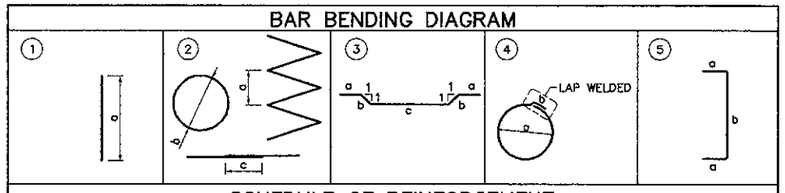

SCHEDULE OF REINFORCEMENT

LOCATION	BAR MARK	SIZE (mm)	BEND TYPE	DIMENSION(mm) OUT TO OUT a	b	c	d	e	f	LENGTH (mm)	NO. REQ'D.	UNIT WEIGHT (kg/m)	WEIGHT (kg)
PIER P1 DIA = 1500 mm L = 38000 mm	B1	32	1	12000						12000	14	6.31	1060
	B2a	32	1	9400						9400	14	6.31	830
	B2b	32	1	12000						12000	28	6.31	2120
	B2c	32	1	10250						10250	14	6.31	905
	B3a	32	1	12000						12000	14	6.31	1060
	B3b	32	1	12000						12000	28	6.31	2120
	B3c	32	1	7650						7650	14	6.31	676
	B4a	19	2	50	1300	500				242492	1	2.23	591
	B4b	19	2	225	1300	500				59559	1	2.23	133
	B4c	19	2	100	1300	500				612611	1	2.23	1366
	B4d	19	2	225	1300	500				204204	1	2.23	455
	B4e	19	2	225	1300	500				110610	1	2.23	247
	S1	19	3	150	170	250				890	72	2.23	151
	S2	19	4	1216	170					3990	36	2.23	338
	S3	16	5	150	1150					1450	10	1.58	23
										TOTAL WEIGHT / PILE = 12,025 Kgs.			
										TOTAL VOLUME FOR BOREPILES = 67.15 Kgs.			

THE SCHEDULE OF REINFORCEMENT SHOWN ON THE BAR BENDING DIAGRAM TABLE IS FOR REFERENCE ONLY. THE CONTRACTOR SHOULD CHECK AND VERIFY ALL DIMENSIONS, SIZES AND QUANTITIES OF REINFORCEMENT.

BORED PILE REINFORCEMENT DETAIL (PIER P1)
SCALE AS SHOWN

PRINTED: OCT. 18, 2006

JAPAN INTERNATIONAL COOPERATION AGENCY / KATAHIRA & ENGINEERS INTERNATIONAL	DESIGNED BY	CHECKED BY	SUBMITTED BY	REPUBLIC OF INDONESIA MINISTRY OF PUBLIC WORKS DIRECTORATE GENERAL OF HIGHWAYS	PROJECT AND LOCATION :	SCALE :	DRAWING TITLE :	DRAWING NO :
	Name: A. GOURLEY	Name: T. OKUMURA	Name: M. KIUCHI		DETAILED DESIGN STUDY OF NORTH JAVA CORRIDOR FLYOVER PROJECT GEBANG FLYOVER - CONTRACT PACKAGE 2 (NAGREG - GEBANG) WEST JAVA PROVINCE	1 : 50 1 : 100	**BORED PILE REINF. DETAILS** (PIER P2, P3 & P13)	GSB-46
	Sign:	Sign:	Sign:	APPROVED BY: Ir. HERRY VAZA M,Eng.Sc NIP. : 110038400		FULL SIZE A3		SHEET NO : 46 / 57
	Date:	Date:	Date:	Sign: / Date:				

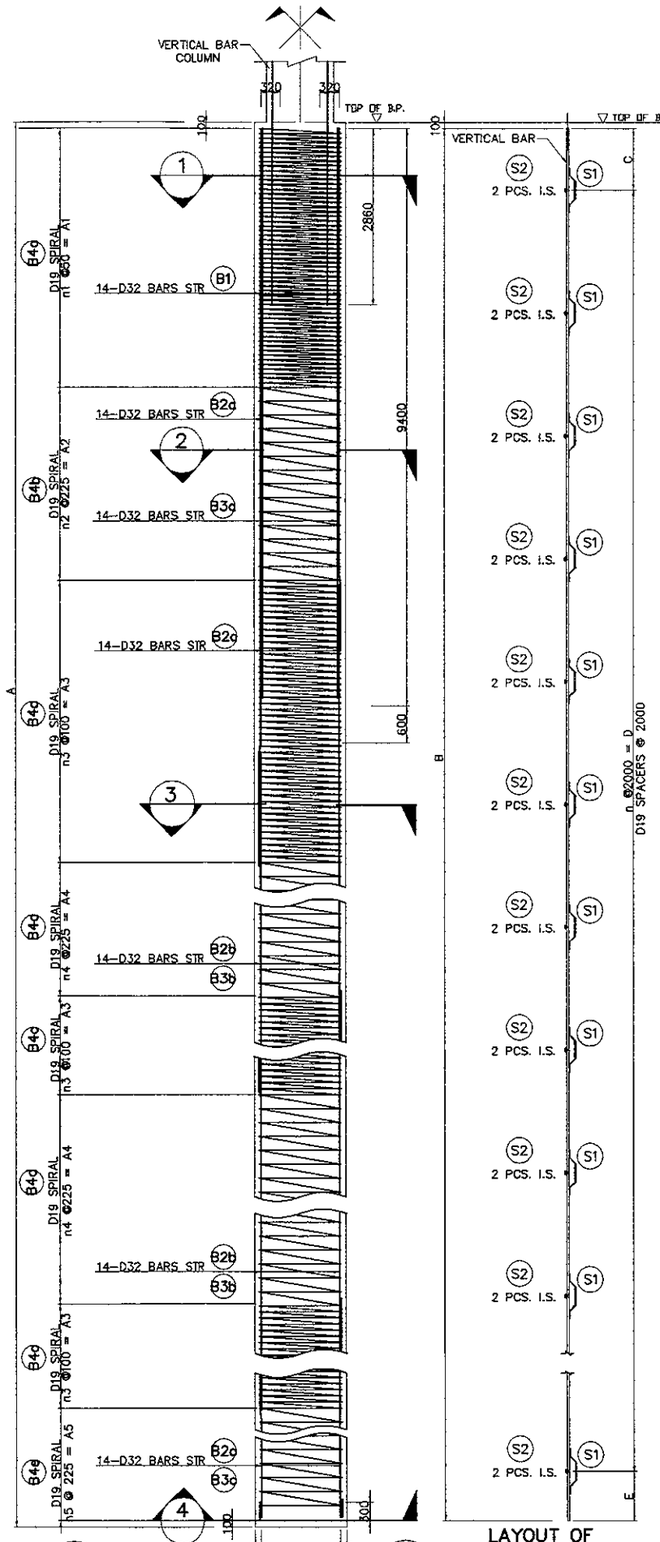

A SECTION
SCALE 1:100

B LAYOUT OF STIFFENER/SPACER
SCALE 1:100

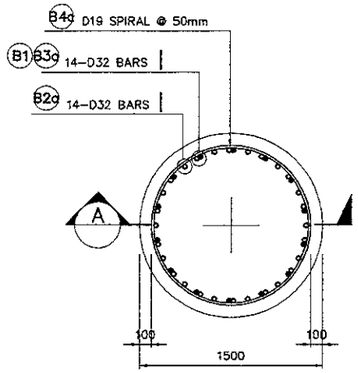

1 SECTION
SCALE 1:50

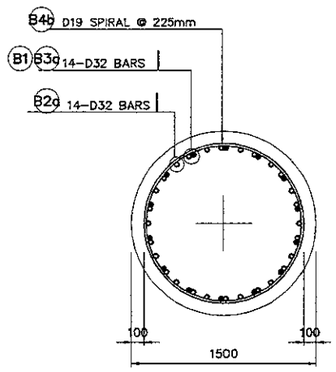

2 SECTION
SCALE 1:50

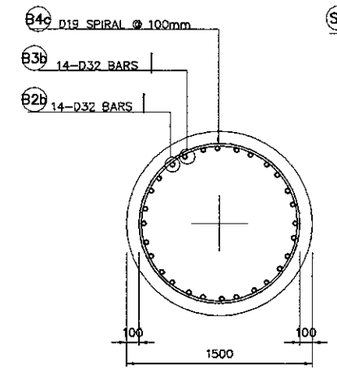

3 SECTION
SCALE 1:50

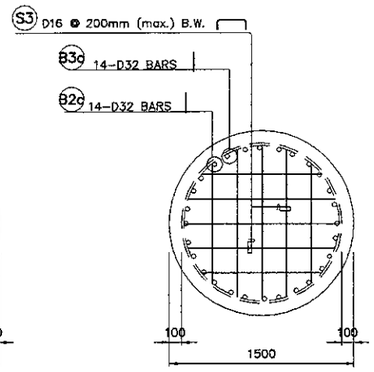

4 SECTION
SCALE 1:50

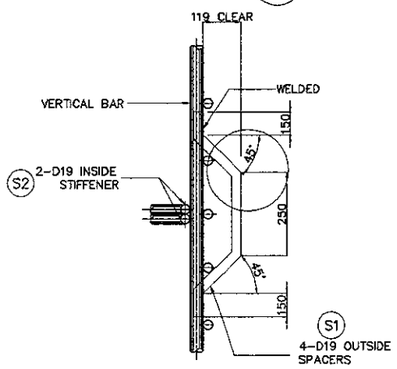

C DETAIL OF STIFFENER/SPACER
NOT TO SCALE

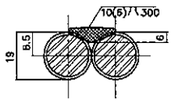

SECTION–D1
SINGLE FLARED–V–GROOVE WELD

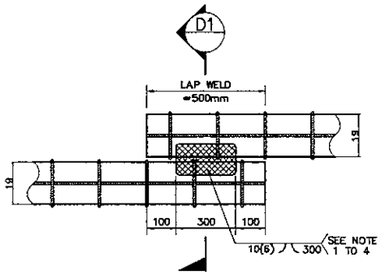

DIRECT LAP JOINT WITH BARS IN CONTACT

D DETAIL OF SPIRAL REINF. FULL LAP–WELD CONNECTION
NOT TO SCALE

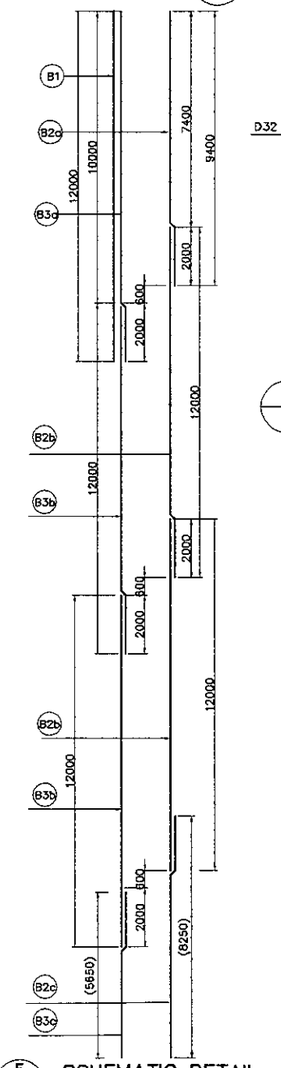

F SCHEMATIC DETAIL
NOT TO SCALE

BORED PILE TYPE		BP–GF1
SIZE (mm)		D1500
MAIN BARS	SIZE (mm)	32
	NO. OF LAYERS	1.0
	NO. OF PCS.	42
SPIRAL	SIZE (mm)	19
	NO. / SET	

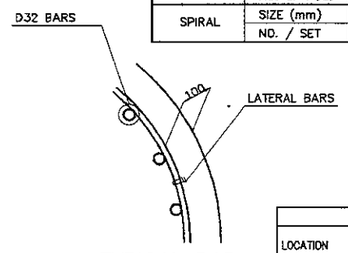

E TYPICAL BAR LAYOUT DETAIL
NOT TO SCALE

NOTES ON LAP–WELD CONNECTION :

1. SPIRAL REINFORCEMENT ARE LAP–WELD CONNECTED (FLARED–V–GROOVE TYPE)
2. WELDING SHOULD CONFORM TO AWS (D1.4) *STRUCTURAL WELDING CODE REINFORCED STEEL.*
3. USE ELECTRODE E90XX.
4. CARE SHOULD BE TAKEN NOT TO DAMAGE THE COLUMN MAIN BARS DURING WELDING.

NOTES :

1. ALL DIMENSIONS ARE IN MILIMETERS.
2. BORED PILE MAIN BARS ARE PROVIDED WITHOUT ANY SPLICE. HOWEVER SPLICING OF MAIN BARS BY MECHANICAL COUPLERS ARE ALLOWED WITH PERMISSION FROM THE STRUCTURAL ENGINEER.
3. CONCRETE : Fc' = 30MPa
4. REINFORCING STEEL=
   D51 : YIELD STRENGTH = 345 N/mm2
   OTHERS : YIELD STRENGTH = 390 N/mm2

LOCATION	DIMENSION A (mm)	B (mm)	C (mm)	D (mm)	E (mm)	n
P2, P3, P13	36000	35800	1000	34000	800	17

LOCATION	DIMENSION A1 (mm)	A2 (mm)	A3 (mm)	A4 (mm)	A5 (mm)	n1	n2	n3	n4	n5
P2, P3, P13	4200	3150	4600	5400	3825	56	14	46	24	17

BAR BENDING DIAGRAM

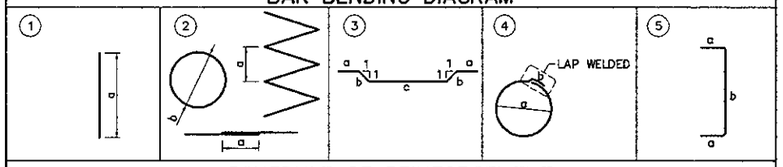

SCHEDULE OF REINFORCEMENT

LOCATION	BAR MARK	SIZE (mm)	BEND TYPE	DIMENSION(mm) OUT TO OUT a	b	c	d	e	f	LENGTH (mm)	NO. REQ'D.	UNIT WEIGHT (kg/m)	WEIGHT (kg)
PIER P2, P3 & P13 DIA = 1500 mm L = 36000 mm	B1	32	1	12000						12000	14	6.31	1060
	B2a	32	1	9400						9400	14	6.31	830
	B2b	32	1	12000						12000	28	6.31	2120
	B2c	32	1	8250						8250	14	6.31	729
	B3a	32	1	12000						12000	14	6.31	1060
	B3b	32	1	12000						12000	28	6.31	2120
	B3c	32	1	5650						5650	14	6.31	499
	B4a	19	2	50	1300	500				242492	1	2.23	541
	B4b	19	2	225	1300	500				59559	1	2.23	133
	B4c	19	2	100	1300	500				587085	1	2.23	1309
	B4d	19	2	225	1300	500				102102	1	2.23	228
	B4e	19	2	225	1300	500				72332	1	2.23	161
	S1	19	3	150	170	250				890	72	2.23	143
	S2	19	4	1216	170					3990	36	2.23	320
	S3	16	5	150	1865					1450	10	1.58	23
										TOTAL WEIGHT / PILE = 12,276 Kgs.			
										TOTAL VOLUME FOR BOREPILES = 63.62 Kgs.			

THE SCHEDULE OF REINFORCEMENT SHOWN ON THE BAR BENDING DIAGRAM TABLE IS FOR REFERENCE ONLY. THE CONTRACTOR SHOULD CHECK AND VERIFY ALL DIMENSIONS, SIZES AND QUANTITIES OF REINFORCEMENT.

BORED PILE REINFORCEMENT DETAIL (PIER P2, P3 & P13)

SCALE AS SHOWN

JAPAN INTERNATIONAL COOPERATION AGENCY KATAHIRA & ENGINEERS INTERNATIONAL	DESIGNED BY	CHECKED BY	SUBMITTED BY	REPUBLIC OF INDONESIA MINISTRY OF PUBLIC WORKS DIRECTORATE GENERAL OF HIGHWAYS	PROJECT AND LOCATION :	SCALE :	DRAWING TITLE :	DRAWING NO :
	Name: A. GOURLEY	Name: T. OKUMURA	Name: M. KIUCHI		DETAILED DESIGN STUDY OF NORTH JAVA CORRIDOR FLYOVER PROJECT GEBANG FLYOVER - CONTRACT PACKAGE 2 (NAGREG - GEBANG) WEST JAVA PROVINCE	1 : 50 1 : 100	**BORED PILE REINF. DETAILS** (PIER P4 & P12)	GSB-047
	Sign	Sign	Sign	APPROVED BY: Ir. HERRY VAZA M,Eng.Sc NIP. : 110038400				SHEET NO : 47 / 57
	Date	Date	Date	Sign / Date		FULL SIZE A3		

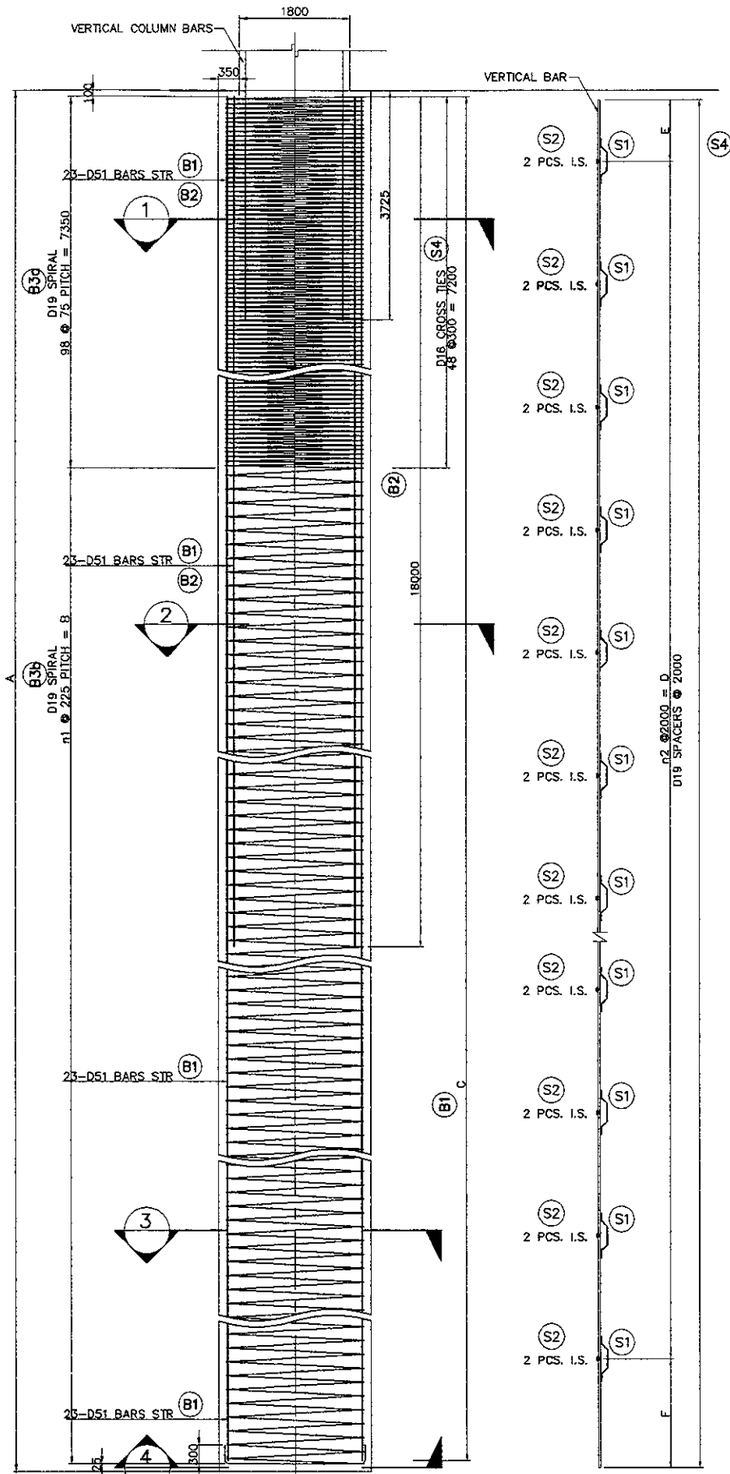

A SECTION
SCALE 1:100

B LAYOUT OF STIFFENER/SPACER
SCALE 1:100

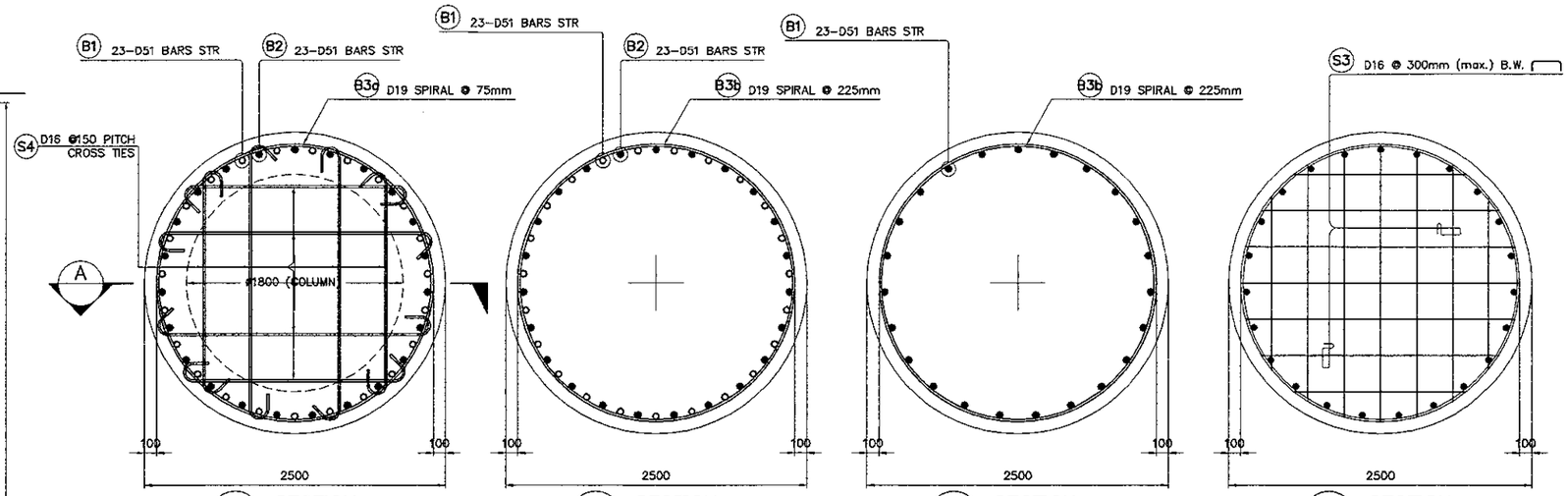

1 SECTION
SCALE 1:50

2 SECTION
SCALE 1:50

3 SECTION
SCALE 1:50

4 SECTION
SCALE 1:50

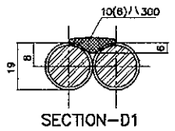

SECTION-D1
SINGLE FLARED-V-GROOVE WELD

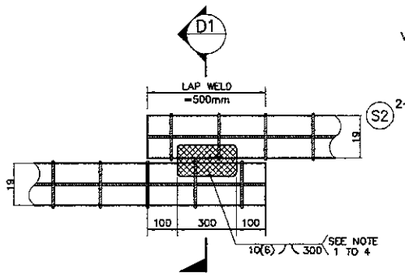

DIRECT LAP JOINT WITH BARS IN CONTACT

D DETAIL OF SPIRAL REINF. FULL LAP-WELD CONNECTION
NOT TO SCALE

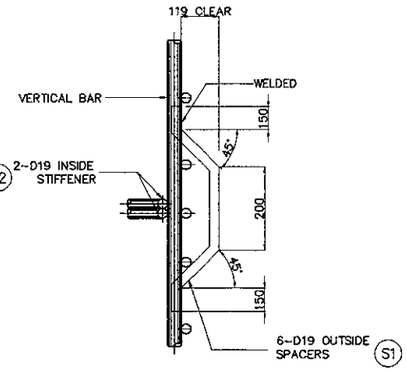

C DETAIL OF STIFFENER/SPACER
NOT TO SCALE

BORED PILE TYPE		BP-GF2
SIZE (mm)		D2500
MAIN BARS	SIZE (mm)	51
	NO. OF LAYERS	1.0
	NO. OF PCS.	46
SPIRAL	SIZE (mm)	19
	NO. / SET	

DIMENSION								
LOCATION	A (mm)	B (mm)	C (mm)	D (mm)	E (mm)	F (mm)	n1	n2
P4, P12	33000	25425	32775	30000	1000	1775	113	15

NOTES ON LAP-WELD CONNECTION :
1. SPIRAL REINFORCEMENT ARE LAP-WELD CONNECTED (FLARED-V-GROOVE TYPE)
2. WELDING SHOULD CONFORM TO AWS (D1.4) "STRUCTURAL WELDING CODE REINFORCED STEEL."
3. USE ELECTRODE E90XX.
4. CARE SHOULD BE TAKEN NOT TO DAMAGE THE COLUMN MAIN BARS DURING WELDING.

NOTES :
1. ALL DIMENSIONS ARE IN MILIMETERS.
2. BORED PILE MAIN BARS ARE PROVIDED WITHOUT ANY SPLICE. HOWEVER SPLICING OF MAIN BARS BY MECHANICAL COUPLERS ARE ALLOWED WITH PERMISSION FROM THE STRUCTURAL ENGINEER.
3. CONCRETE : Fc' = 30MPa
4. REINFORCING STEEL=
   D51 : YIELD STRENGTH = 345 N/mm2
   OTHERS : YIELD STRENGTH = 390 N/mm2

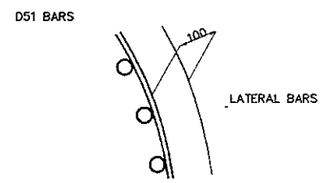

E TYPICAL BAR LAYOUT DETAIL
NOT TO SCALE

BAR BENDING DIAGRAM

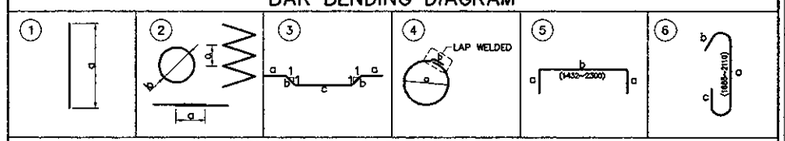

SCHEDULE OF REINFORCEMENT

LOCATION	BAR MARK	SIZE (mm)	BEND TYPE	DIMENSION(mm) OUT TO OUT a	b	c	d	e	f	LENGTH (mm)	NO. REQ'D.	UNIT WEIGHT (kg/m)	WEIGHT (kg)
PIER P4 & P12 DIA = 2500 mm L = 33000 mm	B1	51	1	32775						32775	23	15.90	11986
	B2	51	1	18000						18000	23	15.90	6583
	B3a	19	2	75	2300	500				736756	1	2.23	1643
	B3b	19	2	225	2300	500				849586	1	2.23	1895
	S1	19	3	150	170	250				890	95	2.23	191
	S2	19	4	2058	170					6632	32	2.23	473
	S3	16	5	150	1865					2165	14	1.58	48
	S4	16	6	1895	316	380				4106	200	1.58	1297
										TOTAL WEIGHT FOR / PILE = 24,115 Kgs.			
										VOLUME CONCRETE = 161.99 M3			

THE SCHEDULE OF REINFORCEMENT SHOWN ON THE BAR BENDING DIAGRAM TABLE IS FOR REFERENCE ONLY. THE CONTRACTOR SHOULD CHECK AND VERIFY ALL DIMENSIONS, SIZES AND QUANTITIES OF REINFORCEMENT.

BORED PILE REINF. DETAILS (PIER P4 & P12)
SCALE AS SHOWN

JAPAN INTERNATIONAL COOPERATION AGENCY KATAHIRA & ENGINEERS INTERNATIONAL	DESIGNED BY	CHECKED BY	SUBMITTED BY	REPUBLIC OF INDONESIA MINISTRY OF PUBLIC WORKS DIRECTORATE GENERAL OF HIGHWAYS	PROJECT AND LOCATION :	SCALE :	DRAWING TITLE :	DRAWING NO :
	Name: A. GOURLEY	Name: T. OKUMURA	Name: M. KIUCHI		DETAILED DESIGN STUDY OF NORTH JAVA CORRIDOR FLYOVER PROJECT GEBANG FLYOVER - CONTRACT PACKAGE 2 (NAGREG - GEBANG) WEST JAVA PROVINCE	1 : 25 1 : 50	**BORED PILE REINF. DETAILS** (PIER P5 & P6)	GSB-048
	Sign:	Sign:	Sign:	APPROVED BY: Ir. HERRY VAZA M,Eng.Sc NIP. : 110038400				SHEET NO : 48 / 57
	Date:	Date:	Date:	Sign: / Date:		FULL SIZE A3		

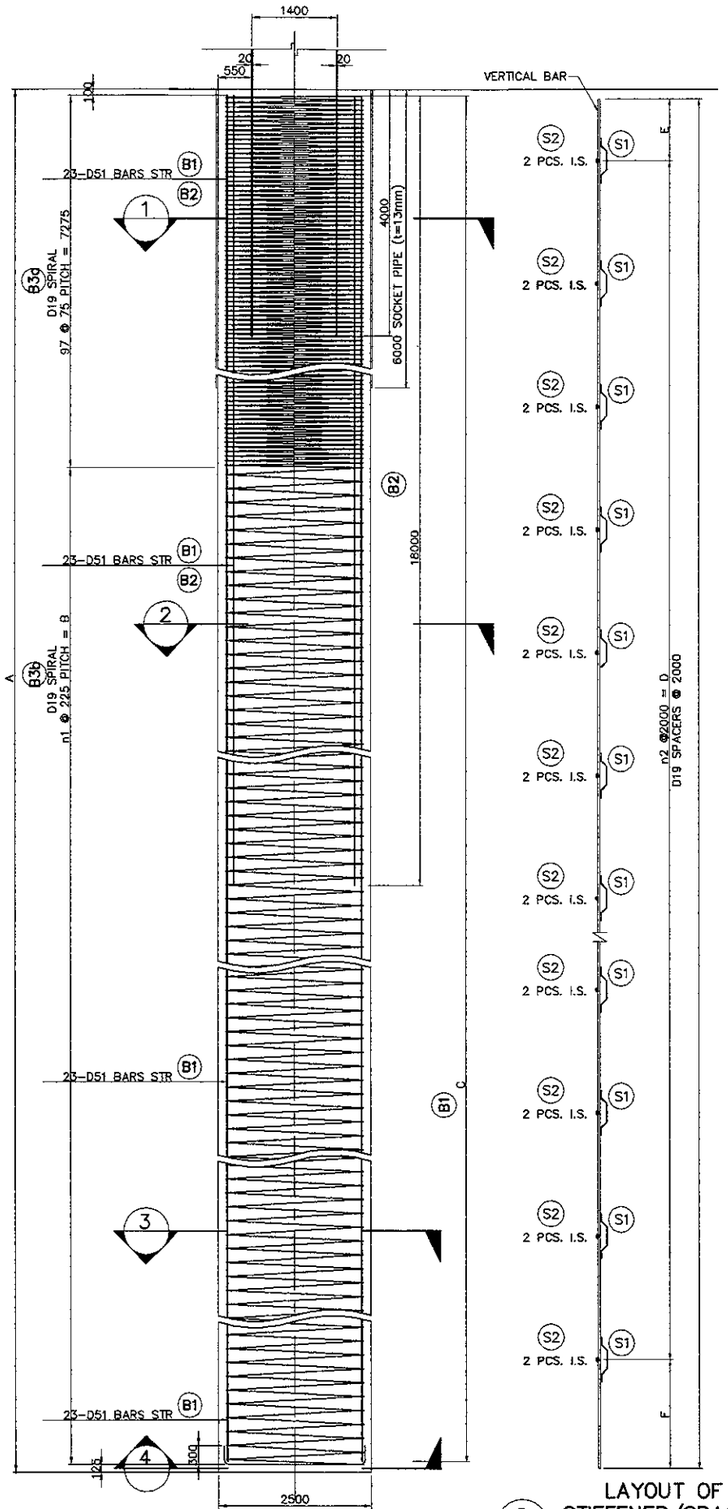

A SECTION
SCALE 1:100

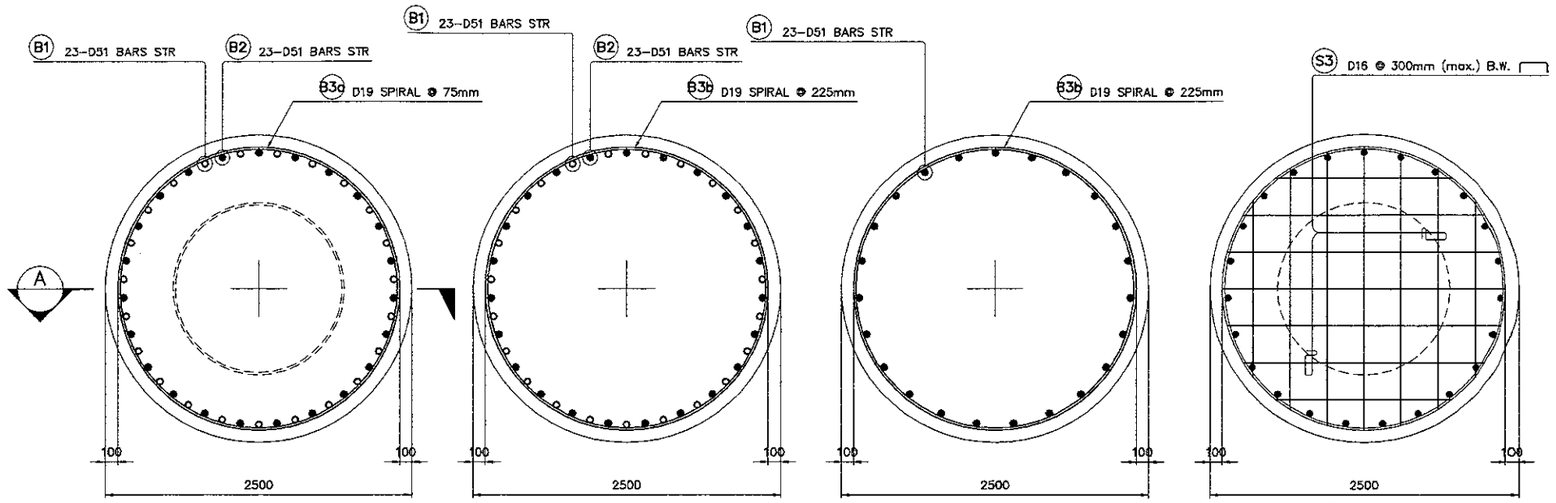

1 SECTION
SCALE 1:50

2 SECTION
SCALE 1:50

3 SECTION
SCALE 1:50

4 SECTION
SCALE 1:50

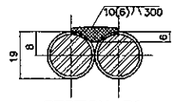

SECTION–D1
SINGLE FLARED–V–GROOVE WELD

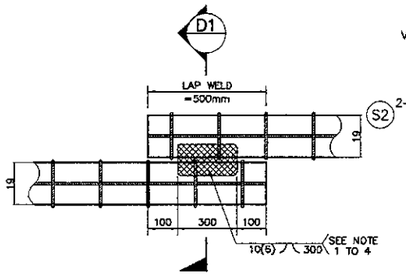

DIRECT LAP JOINT WITH BARS IN CONTACT

D DETAIL OF SPIRAL REINF. FULL LAP–WELD CONNECTION
NOT TO SCALE

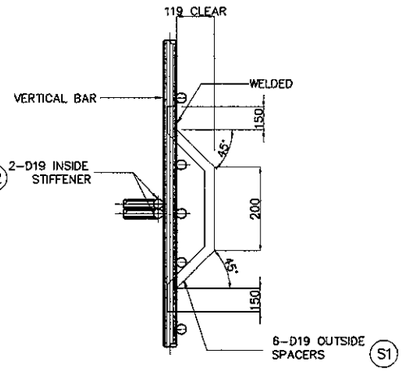

C DETAIL OF STIFFENER/SPACER
NOT TO SCALE

BORED PILE TYPE		BP- GF2
SIZE (mm)		D2500
MAIN BARS	SIZE (mm)	51
	NO. OF LAYERS	1.0
	NO. OF PCS.	46
SPIRAL	SIZE (mm)	19
	NO. / SET	

DIMENSION								
LOCATION	A (mm)	B (mm)	C (mm)	D (mm)	E (mm)	F (mm)	n1	n2
P5, P6	35000	27450	34725	32000	1000	1725	122	16

NOTES ON LAP–WELD CONNECTION :
1. SPIRAL REINFORCEMENT ARE LAP–WELD CONNECTED (FLARED–V–GROOVE TYPE)
2. WELDING SHOULD CONFORM TO AWS (D1.4) "STRUCTURAL WELDING CODE REINFORCED STEEL."
3. USE ELECTRODE E90XX.
4. CARE SHOULD BE TAKEN NOT TO DAMAGE THE COLUMN MAIN BARS DURING WELDING.

NOTES :
1. ALL DIMENSIONS ARE IN MILIMETERS.
2. BORED PILE MAIN BARS ARE PROVIDED WITHOUT ANY SPLICE. HOWEVER SPLICING OF MAIN BARS BY MECHANICAL COUPLERS ARE ALLOWED WITH PERMISSION FROM THE STRUCTURAL ENGINEER.
3. COMPOSITE COLUMN SOCKET TYPE CONNECTION SEE DWG. NO. GSB–042
4. CONCRETE : Fc' = 30MPa
5. REINFORCING STEEL=
   D51 : YIELD STRENGTH = 345 N/mm2
   OTHERS : YIELD STRENGTH = 390 N/mm2

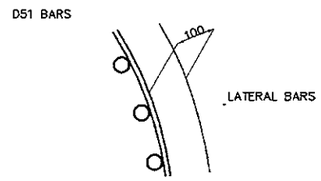

E TYPICAL BAR LAYOUT DETAIL
NOT TO SCALE

B LAYOUT OF STIFFENER/SPACER
SCALE 1:100

BAR BENDING DIAGRAM

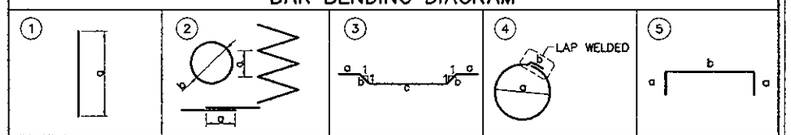

SCHEDULE OF REINFORCEMENT

LOCATION	BAR MARK	SIZE (mm)	BEND TYPE	DIMENSION(mm) OUT TO OUT a	b	c	d	e	f	LENGTH (mm)	NO. REQ'D.	UNIT WEIGHT (kg/m)	WEIGHT (kg)
PIER P5 & P6 DIA = 2500 mm L = 35000 mm	B1	51	1	34725						34725	23	15.90	12699
	B2	51	1	18000						18000	23	15.90	6583
	B3a	19	2	75	2300	500				737620	1	2.23	1645
	B3b	19	2	225	2300	500				1221687	1	2.23	2724
	S1	19	3	150	170	250				890	102	2.23	202
	S2	19	4	2058	170					6635	34	2.23	503
	S3	16	5	150	1870					2170	14	1.58	48
										TOTAL WEIGHT FOR / PILE = 24,404 Kgs.			
										VOLUME CONCRETE = 171.80 M3			

THE SCHEDULE OF REINFORCEMENT SHOWN ON THE BAR BENDING DIAGRAM TABLE IS FOR REFERENCE ONLY. THE CONTRACTOR SHOULD CHECK AND VERIFY ALL DIMENSIONS, SIZES AND QUANTITIES OF REINFORCEMENT.

BORED PILE REINF. DETAILS (PIER P5 & P6)
SCALE AS SHOWN

JAPAN INTERNATIONAL COOPERATION AGENCY KATAHIRA & ENGINEERS INTERNATIONAL	DESIGNED BY	CHECKED BY	SUBMITTED BY	REPUBLIC OF INDONESIA MINISTRY OF PUBLIC WORKS DIRECTORATE GENERAL OF HIGHWAYS	PROJECT AND LOCATION :	SCALE :	DRAWING TITLE :	DRAWING NO :
	Name: A. GOURLEY	Name: T. OKUMURA	Name: M. KIUCHI		DETAILED DESIGN STUDY OF NORTH JAVA CORRIDOR FLYOVER PROJECT GEBANG FLYOVER - CONTRACT PACKAGE 2 (NAGREG - GEBANG) WEST JAVA PROVINCE	1 : 50 1 : 100	**BORED PILE REINF. DETAILS** (PIER P7)	GSB-049
	Sign:	Sign:	Sign:	APPROVED BY: Ir. HERRY VAZA M,Eng.Sc NIP. : 110038400		FULL SIZE A3		SHEET NO : 49 / 57
	Date:	Date:	Date:	Sign: / Date:				

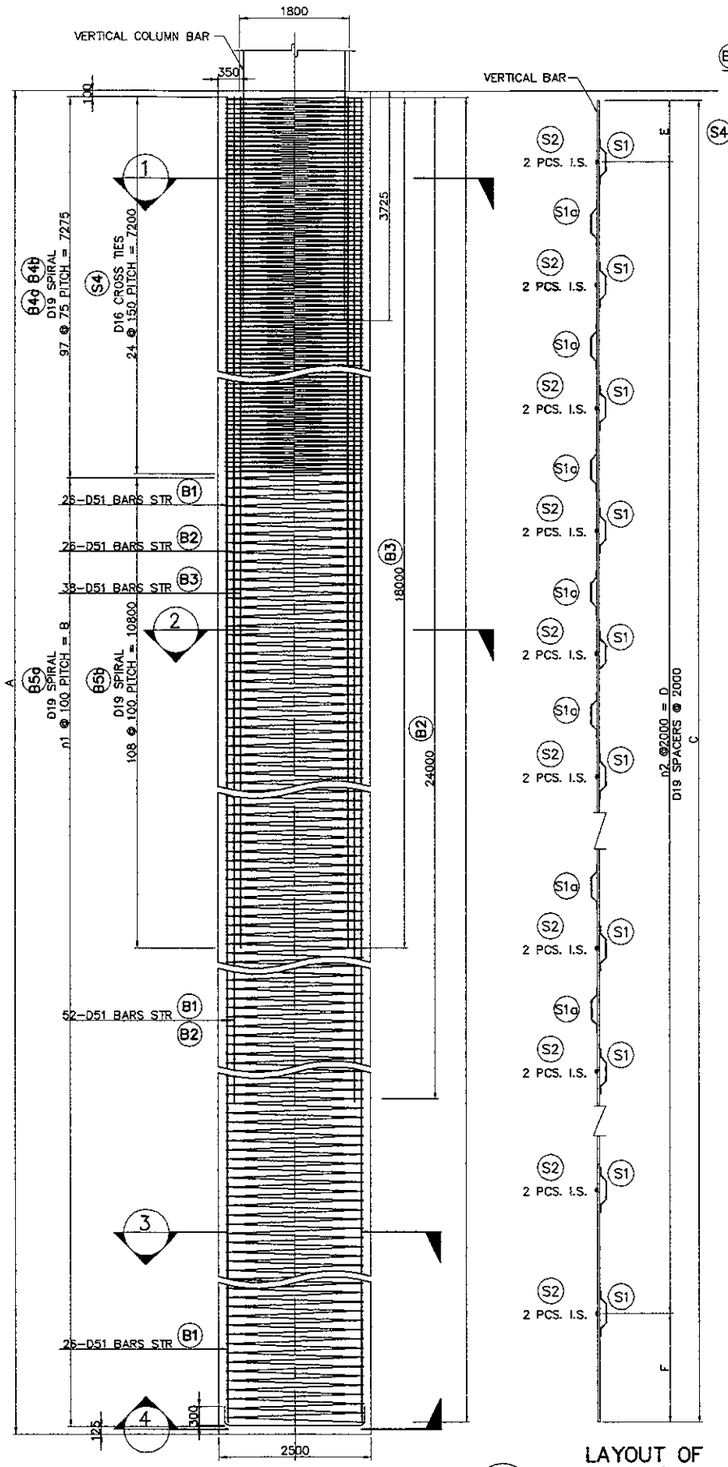

A SECTION
SCALE 1:100

B LAYOUT OF STIFFENER/SPACER
SCALE 1:100

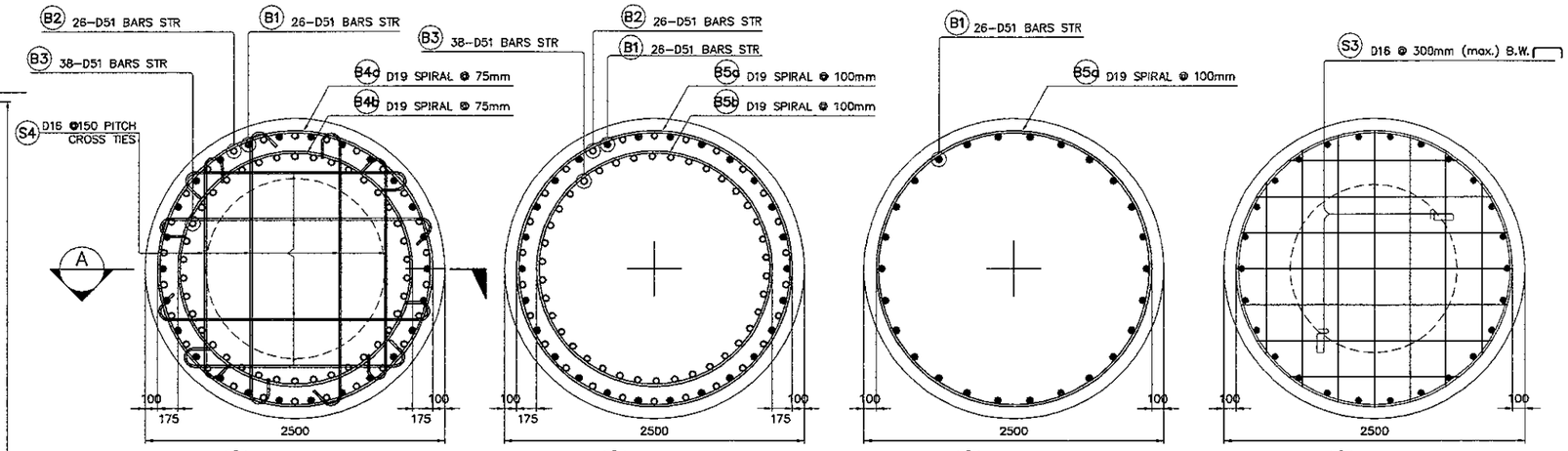

1 SECTION
SCALE 1:50

2 SECTION
SCALE 1:50

3 SECTION
SCALE 1:50

4 SECTION
SCALE 1:50

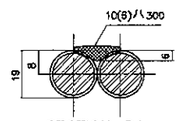

SECTION-D1
SINGLE FLARED-V-GROOVE WELD

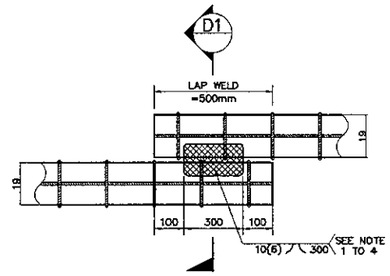

DIRECT LAP JOINT WITH BARS IN CONTACT

D DETAIL OF SPIRAL REINF. FULL LAP-WELD CONNECTION
NOT TO SCALE

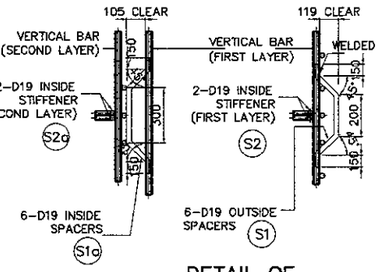

C DETAIL OF STIFFENER/SPACER
NOT TO SCALE

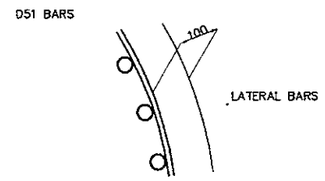

E TYPICAL BAR LAYOUT DETAIL
NOT TO SCALE

BAR BENDING DIAGRAM

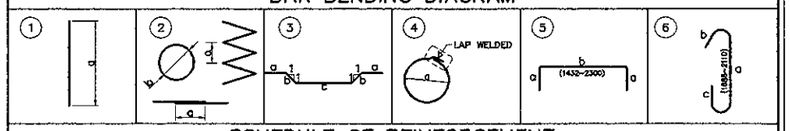

SCHEDULE OF REINFORCEMENT

LOCATION	BAR MARK	SIZE (mm)	BEND TYPE	DIMENSION(mm) OUT TO OUT a	b	c	d	e	f	LENGTH (mm)	NO. REQ'D.	UNIT WEIGHT (kg/m)	WEIGHT (kg)
PIER P7 DIA = 2500 mm L= 33000 mm	B1	51	1	32775						32775	26	15.90	13549
	B2	51	1	24000						24000	26	15.90	9922
	B3	51	1	18000						18000	38	15.90	10876
	B4a	19	2	75	2300	500				737620	1	2.23	1645
	B4b	19	2	75	1950	500				625373	1	2.23	1395
	B5a	19	2	100	2300	500				1279545	1	2.23	2853
	B5b	19	2	100	1950	500				459458	1	2.23	1025
	S1	19	3	150	170	250				890	96	2.23	191
	S1a	19	3	150	150	350				950	48	2.23	102
	S2	19	4	2160	170					6956	32	2.23	496
	S2a	19	4	1810	170					5856	16	2.23	209
	S3	16	5	150	1870					2170	14	1.58	48
	S4	16	6	2045	316	380				2741	200	1.58	1075
										TOTAL WEIGHT FOR / PILE = 43,386 Kgs.			
										TOTAL VOLUME CONCRETE = 161.99 m3			

THE SCHEDULE OF REINFORCEMENT SHOWN ON THE BAR BENDING DIAGRAM TABLE IS FOR REFERENCE ONLY. THE CONTRACTOR SHOULD CHECK AND VERIFY ALL DIMENSIONS, SIZES AND QUANTITIES OF REINFORCEMENT.

BORED PILE TYPE		BP-GF2
SIZE (mm)		D2500
MAIN BARS	SIZE (mm)	51
	NO. OF LAYERS	2.0
	NO. OF PCS. (1)	52
	NO. OF PCS. (2)	38
SPIRAL	SIZE (mm)	19
	NO. / SET	

LOCATION	DIMENSION A (mm)	B (mm)	C (mm)	D (mm)	E (mm)	F (mm)	n1	n2 (S1)	n2 (S1a)
P7	33000	25500	32775	30000	1000	1775	255	15	8

NOTES ON LAP-WELD CONNECTION :

1. SPIRAL REINFORCEMENT ARE LAP-WELD CONNECTED (FLARED-V-GROOVE TYPE)
2. WELDING SHOULD CONFORM TO AWS (D1.4) "STRUCTURAL WELDING CODE REINFORCED STEEL."
3. USE ELECTRODE E90XX.
4. CARE SHOULD BE TAKEN NOT TO DAMAGE THE COLUMN MAIN BARS DURING WELDING.

NOTES :

1. ALL DIMENSIONS ARE IN MILIMETERS.
2. BORED PILE MAIN BARS ARE PROVIDED WITHOUT ANY SPLICE. HOWEVER SPLICING OF MAIN BARS BY MECHANICAL COUPLERS ARE ALLOWED WITH PERMISSION FROM THE STRUCTURAL ENGINEER.
3. CONCRETE : Fc' = 30MPa
4. REINFORCING STEEL=
   D51 : YIELD STRENGTH = 345 N/mm2
   OTHERS : YIELD STRENGTH = 390 N/mm2

. BORED PILE REINF. DETAILS (PIER P7)
SCALE AS SHOWN

JAPAN INTERNATIONAL COOPERATION AGENCY KATAHIRA & ENGINEERS INTERNATIONAL	DESIGNED BY	CHECKED BY	SUBMITTED BY	REPUBLIC OF INDONESIA MINISTRY OF PUBLIC WORKS DIRECTORATE GENERAL OF HIGHWAYS	PROJECT AND LOCATION :	SCALE :	DRAWING TITLE :	DRAWING NO :
	Name: A. GOURLEY	Name: T. OKUMURA	Name: M. KIUCHI		DETAILED DESIGN STUDY OF NORTH JAVA CORRIDOR FLYOVER PROJECT GEBANG FLYOVER - CONTRACT PACKAGE 2 (NAGREG - GEBANG) WEST JAVA PROVINCE	1 : 50 1 : 100	**BORED PILE REINF. DETAILS** (PIER P8)	GSB-050
	Sign	Sign	Sign	APPROVED BY: Ir. HERRY VAZA M,Eng.Sc NIP. : 110038400				SHEET NO : 50 / 57
	Date	Date	Date	Sign / Date		FULL SIZE A3		

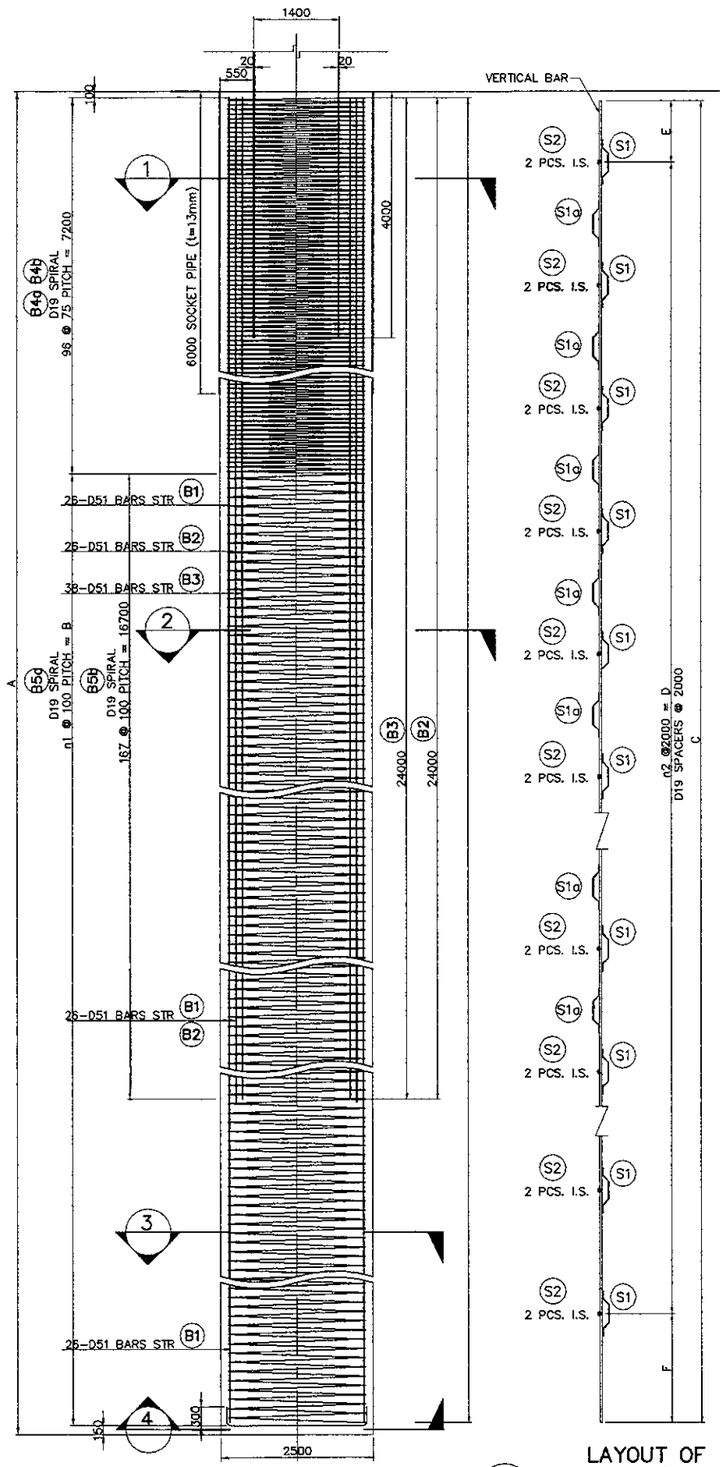

A SECTION
SCALE 1:100

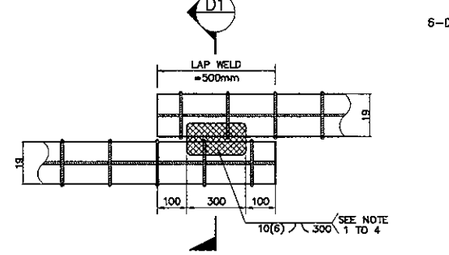

D DETAIL OF SPIRAL REINF. FULL LAP-WELD CONNECTION
NOT TO SCALE

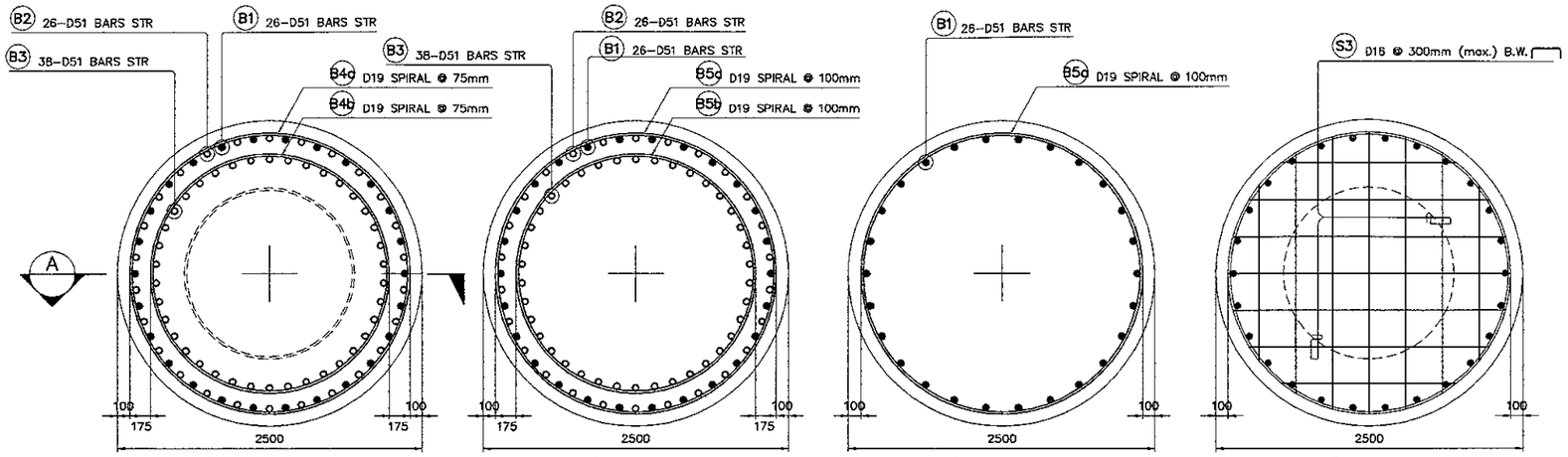

1 SECTION
SCALE 1:50

2 SECTION
SCALE 1:50

3 SECTION
SCALE 1:50

4 SECTION
SCALE 1:50

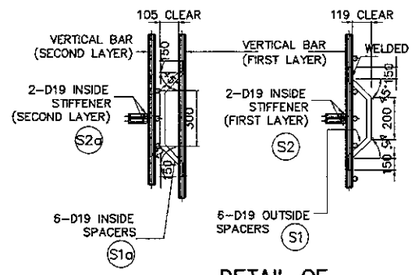

C DETAIL OF STIFFENER/SPACER
NOT TO SCALE

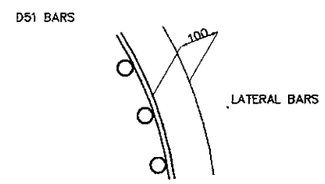

E TYPICAL BAR LAYOUT DETAIL
NOT TO SCALE

BAR BENDING DIAGRAM

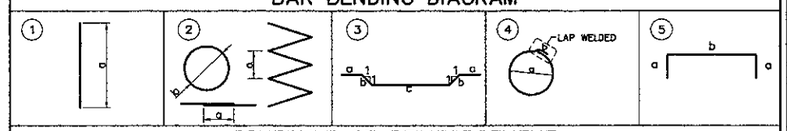

SCHEDULE OF REINFORCEMENT

LOCATION	BAR MARK	SIZE (mm)	BEND TYPE	DIMENSION(mm) OUT TO OUT a	b	c	d	e	f	LENGTH (mm)	NO. REQ'D.	UNIT WEIGHT (kg/m)	WEIGHT (kg)
PIER P8, P11 DIA = 2500 mm L= 41000 mm	B1	51	1	40775						40775	26	15.90	16856
	B2	51	1	24000						24000	26	15.90	9922
	B3	51	1	24000						24000	38	15.90	14501
	B4a	19	2	75	2300	500				729034	1	2.23	1626
	B4b	19	2	75	2058	500				650826	1	2.23	1451
	B5a	19	2	100	2300	500				2518370	1	2.23	5616
	B5b	19	2	100	2058	500				1122790	1	2.23	2504
	S1	19	3	150	170	250				890	120	2.23	238
	S1a	19	3	150	150	350				950	66	2.23	140
	S2	19	4	2160	170					6952	40	2.23	620
	S2a	19	4	1810	170					5853	22	2.23	287
	S3	16	5	150	1865					2165	14	1.58	48
										TOTAL WEIGHT FOR / PILE = 53,809 Kgs.			
										TOTAL VOLUME CONCRETE = 201.26 m3			

THE SCHEDULE OF REINFORCEMENT SHOWN ON THE BAR BENDING DIAGRAM TABLE IS FOR REFERENCE ONLY. THE CONTRACTOR SHOULD CHECK AND VERIFY ALL DIMENSIONS, SIZES AND QUANTITIES OF REINFORCEMENT.

BORED PILE TYPE		BP-GF4
SIZE (mm)		D2500
MAIN BARS	SIZE (mm)	51
	NO. OF LAYERS	2.0
	NO. OF PCS. (1)	52
	NO. OF PCS. (2)	38
SPIRAL	SIZE (mm)	19
	NO. / SET	

LOCATION	DIMENSION A (mm)	B (mm)	C (mm)	D (mm)	E (mm)	F (mm)	n1	n2 (S1)	n2 (S1a)
P8	41000	33600	40775	38000	1000	1775	335	19	11

NOTES ON LAP-WELD CONNECTION :
1. SPIRAL REINFORCEMENT ARE LAP-WELD CONNECTED (FLARED-V-GROOVE TYPE)
2. WELDING SHOULD CONFORM TO AWS (D1.4) "STRUCTURAL WELDING CODE REINFORCED STEEL"
3. USE ELECTRODE E90XX.
4. CARE SHOULD BE TAKEN NOT TO DAMAGE THE COLUMN MAIN BARS DURING WELDING.

NOTES :
1. ALL DIMENSIONS ARE IN MILIMETERS.
2. BORED PILE MAIN BARS ARE PROVIDED WITHOUT ANY SPLICE. HOWEVER SPLICING OF MAIN BARS BY MECHANICAL COUPLERS ARE ALLOWED WITH PERMISSION FROM THE STRUCTURAL ENGINEER.
3. COMPOSITE COLUMN SOCKET TYPE CONNECTION SEE DWG. NO. GSB-043
4. CONCRETE : Fc' = 30MPa
5. REINFORCING STEEL=
   D51 : YIELD STRENGTH = 345 N/mm2
   OTHERS : YIELD STRENGTH = 390 N/mm2

B LAYOUT OF STIFFENER/SPACER
SCALE 1:100

BORED PILE REINF. DETAILS (PIER P8)
SCALE AS SHOWN

PRINTED: OCT. 18, 2008

JAPAN INTERNATIONAL COOPERATION AGENCY KATAHIRA & ENGINEERS INTERNATIONAL	DESIGNED BY	CHECKED BY	SUBMITTED BY	REPUBLIC OF INDONESIA MINISTRY OF PUBLIC WORKS DIRECTORATE GENERAL OF HIGHWAYS	PROJECT AND LOCATION :	SCALE :	DRAWING TITLE :	DRAWING NO :
	Name: A. GOURLEY	Name: T. OKUMURA	Name: M. KIUCHI		DETAILED DESIGN STUDY OF NORTH JAVA CORRIDOR FLYOVER PROJECT GEBANG FLYOVER - CONTRACT PACKAGE 2 (NAGREG - GEBANG) WEST JAVA PROVINCE	1 : 50 1 : 100	**BORED PILE REINF. DETAILS** (PIER P9, P10 & P11)	GSB-051
	Sign	Sign	Sign	APPROVED BY: Ir. HERRY VAZA M,Eng.Sc NIP. : 110038400				SHEET NO : 51 / 57
	Date	Date	Date	Sign / Date		FULL SIZE A3		

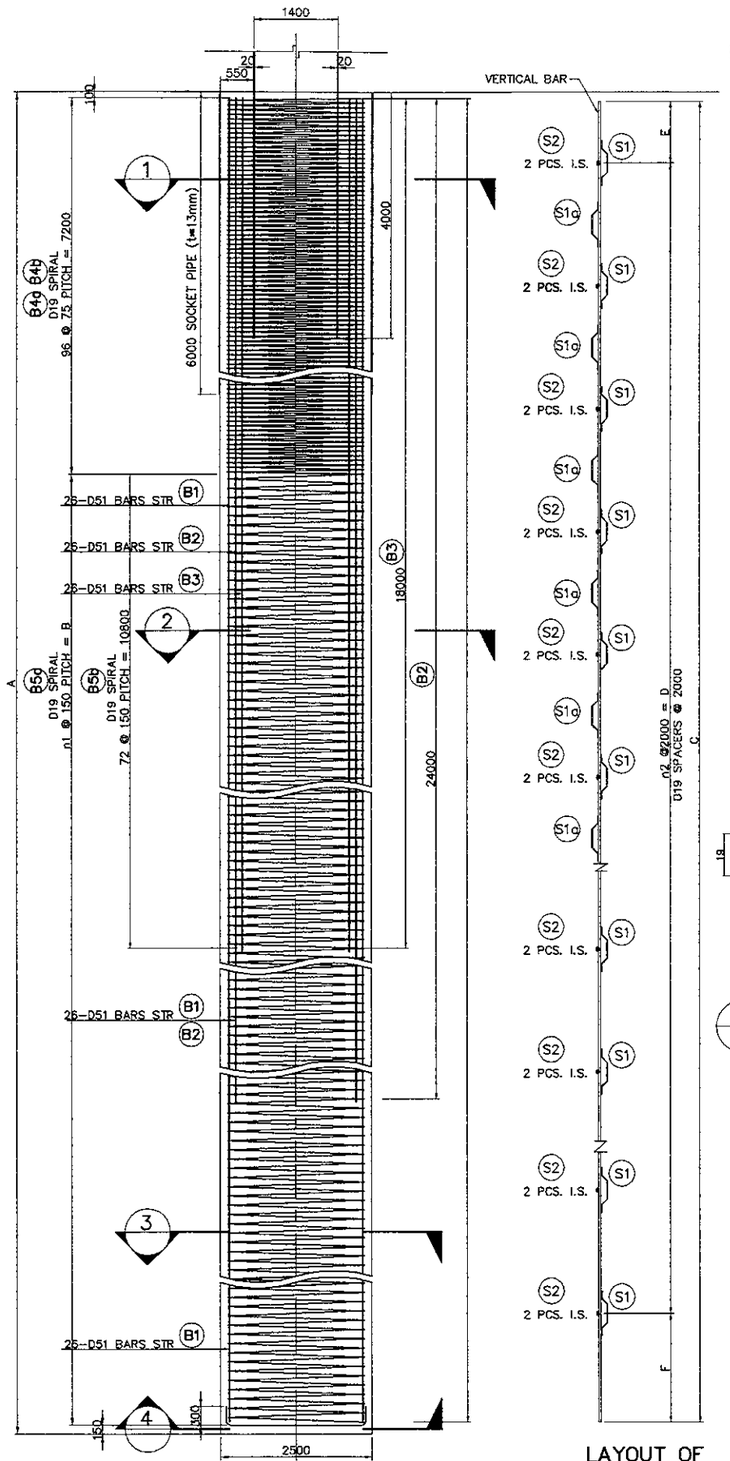

A SECTION
SCALE 1:100

B LAYOUT OF STIFFENER/SPACER
SCALE 1:100

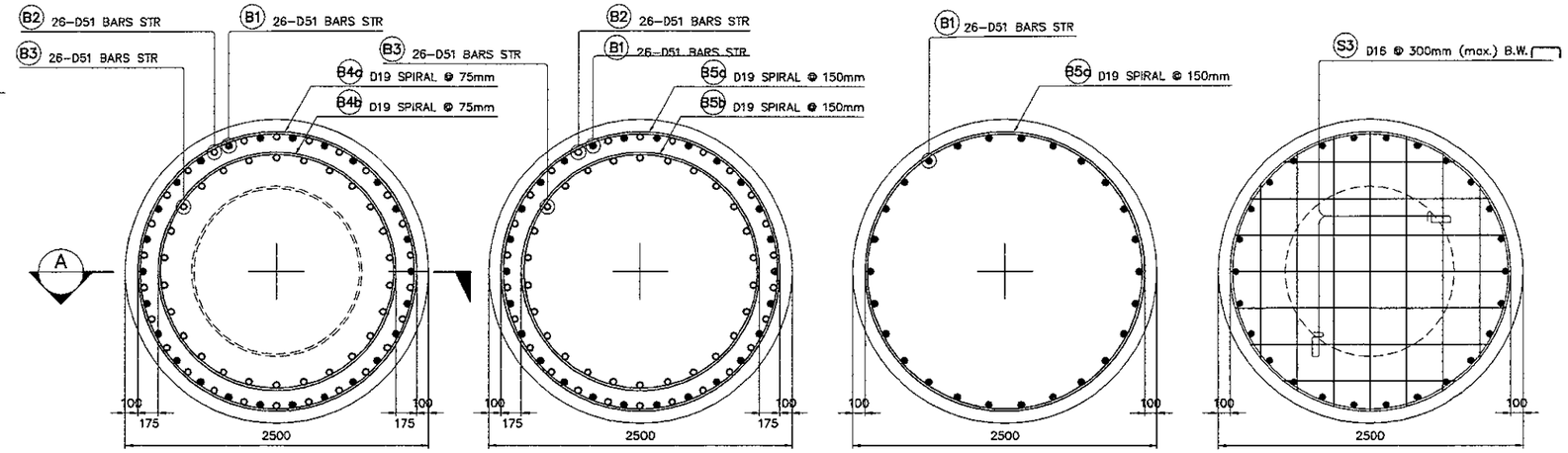

1 SECTION
SCALE 1:50

2 SECTION
SCALE 1:50

3 SECTION
SCALE 1:50

4 SECTION
SCALE 1:50

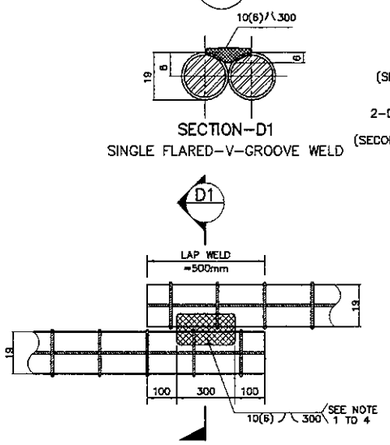

D DETAIL OF SPIRAL REINF. FULL LAP-WELD CONNECTION
NOT TO SCALE

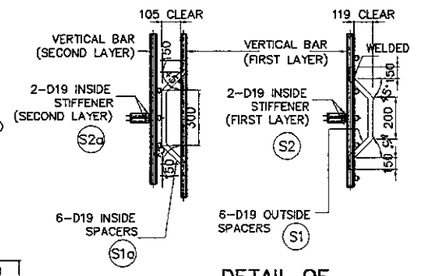

C DETAIL OF STIFFENER/SPACER
NOT TO SCALE

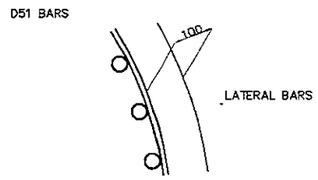

E TYPICAL BAR LAYOUT DETAIL
NOT TO SCALE

BAR BENDING DIAGRAM

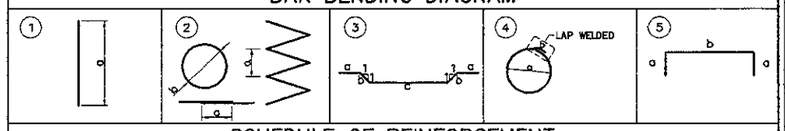

SCHEDULE OF REINFORCEMENT

LOCATION	BAR MARK	SIZE (mm)	BEND TYPE	DIMENSION(mm) OUT TO OUT a	b	c	d	e	f	LENGTH (mm)	NO. REQ'D.	UNIT WEIGHT (kg/m)	WEIGHT (kg)
PIER P9, P11 DIA = 2500 mm L= 39000 mm	B1	51	1	38775						38775	26	15.90	16030
	B2	51	1	24000						24000	26	15.90	9922
	B3	51	1	18000						18000	26	15.90	7441
	B4a	19	2	75	2300	500				730093	1	2.23	1628
	B4b	19	2	75	1950	500				618992	1	2.23	1380
	B5a	19	2	150	2300	500				1580610	1	2.23	3525
	B5b	19	2	150	1950	500				465839	1	2.23	1039
	S1	19	3	150	170	250				890	114	2.23	226
	S1a	19	3	150	150	350				950	48	2.23	102
	S2	19	4	2160	170					6952	36	2.23	558
	S2a	19	4	1810	170					5853	16	2.23	209
	S3	16	5	150	1870					2170	14	1.58	48
										TOTAL WEIGHT FOR / PILE = 42,108 Kgs.			
										TOTAL VOLUME CONCRETE = 191.44 m3			
PIER P10 DIA = 2500 mm L= 37000 mm	B1	51	1	36750						36750	26	15.90	15192
	B2	51	1	24000						24000	26	15.90	9922
	B3	51	1	18000						18000	26	15.90	7441
	B4a	19	2	75	2300	500				730093	1	2.23	1628
	B4b	19	2	75	1950	500				618992	1	2.23	1380
	B5a	19	2	150	2300	500				148277	1	2.23	3307
	B5b	19	2	150	1950	500				465839	1	2.23	1039
	S1	19	3	150	170	250				890	108	2.23	214
	S1a	19	3	150	150	350				950	48	2.23	102
	S2	19	4	2160	170					6952	32	2.23	496
	S2a	19	4	1810	170					5853	16	2.23	209
	S3	16	5	150	1870					2170	14	1.58	48
										TOTAL WEIGHT FOR / PILE = 40,978 Kgs.			
										TOTAL VOLUME CONCRETE = 181.62 m3			

THE SCHEDULE OF REINFORCEMENT SHOWN ON THE BAR BENDING DIAGRAM TABLE IS FOR REFERENCE ONLY. THE CONTRACTOR SHOULD CHECK AND VERIFY ALL DIMENSIONS, SIZES AND QUANTITIES OF REINFORCEMENT.

NOTES ON LAP-WELD CONNECTION :

1. SPIRAL REINFORCEMENT ARE LAP-WELD CONNECTED (FLARED-V-GROOVE TYPE)
2. WELDING SHOULD CONFORM TO AWS (D1.4) *STRUCTURAL WELDING CODE REINFORCED STEEL.*
3. USE ELECTRODE E90XX.
4. CARE SHOULD BE TAKEN NOT TO DAMAGE THE COLUMN MAIN BARS DURING WELDING.

NOTES :

1. ALL DIMENSIONS ARE IN MILIMETERS.
2. BORED PILE MAIN BARS ARE PROVIDED WITHOUT ANY SPLICE. HOWEVER SPLICING OF MAIN BARS BY MECHANICAL COUPLERS ARE ALLOWED WITH PERMISSION FROM THE STRUCTURAL ENGINEER.
3. COMPOSITE COLUMN SOCKET TYPE CONNECTION SEE DWG. NO. GSB-044
4. CONCRETE : Fc' = 30MPa
5. REINFORCING STEEL=
   D51 : YIELD STRENGTH = 345 N/mm2
   OTHERS : YIELD STRENGTH = 390 N/mm2

BORED PILE TYPE		BP-CF5
SIZE (mm)		D2500
MAIN BARS	SIZE (mm)	51
	NO. OF LAYERS	2.0
	NO. OF PCS. (1)	52
	NO. OF PCS. (2)	26
SPIRAL	SIZE (mm)	19
	NO. / SET	

LOCATION	DIMENSION A (mm)	B (mm)	C (mm)	D (mm)	E (mm)	F (mm)	n1	n2 (S1)	n2 (S1a)
P9, P11	39000	31500	38775	36000	1000	1775	210	18	8
P10	37000	29550	36750	34000	1000	1750	197	17	8

BORED PILE REINF. DETAILS (PIER P9, P10 & P11)
SCALE AS SHOWN

PRINTED: OCT. 18, 2006

JAPAN INTERNATIONAL COOPERATION AGENCY KATAHIRA & ENGINEERS INTERNATIONAL	DESIGNED BY		CHECKED BY		SUBMITTED BY	
	Name	A. GOURLEY	Name	T. OKUMURA	Name	M. KIUCHI
	Sign		Sign		Sign	
	Date		Date		Date	

REPUBLIC OF INDONESIA
MINISTRY OF PUBLIC WORKS
DIRECTORATE GENERAL OF HIGHWAYS

APPROVED BY	Ir. HERRY VAZA M,Eng.Sc	Sign	
	NIP. : 110038400	Date	

PROJECT AND LOCATION :
DETAILED DESIGN STUDY OF
NORTH JAVA CORRIDOR FLYOVER PROJECT
GEBANG FLYOVER - CONTRACT PACKAGE 2
(NAGREG - GEBANG)
WEST JAVA PROVINCE

SCALE : 1 : 50, 1 : 100 — FULL SIZE A3

DRAWING TITLE :
BORED PILE REINF. DETAILS
(PIER P14 & P15)

DRAWING NO : GSB-052
SHEET NO : 52 / 57

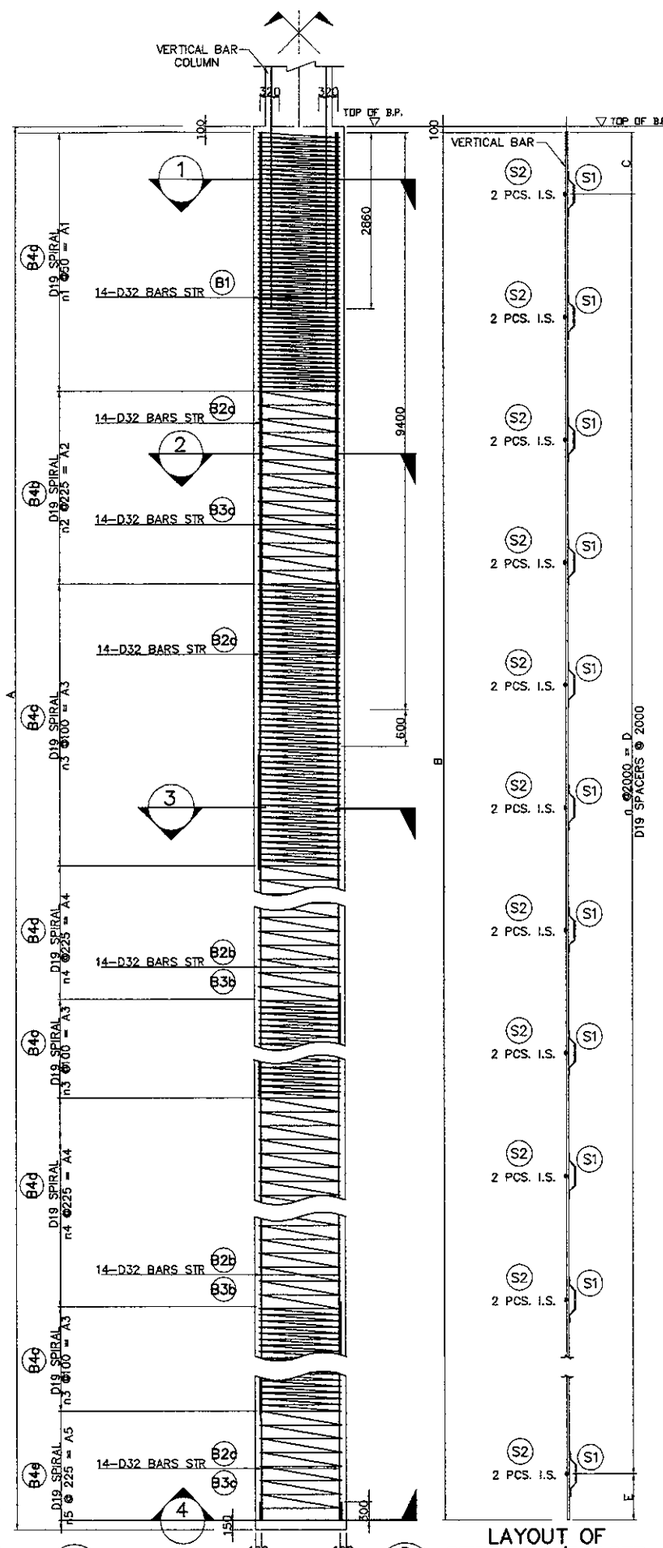

A SECTION
SCALE 1:100

B LAYOUT OF STIFFENER/SPACER
SCALE 1:100

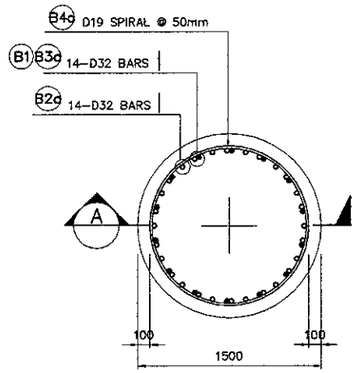

1 SECTION
SCALE 1:50

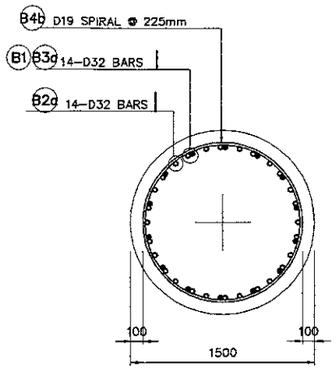

2 SECTION
SCALE 1:50

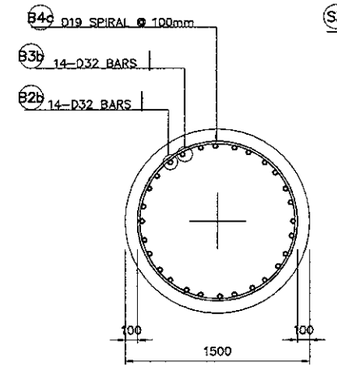

3 SECTION
SCALE 1:50

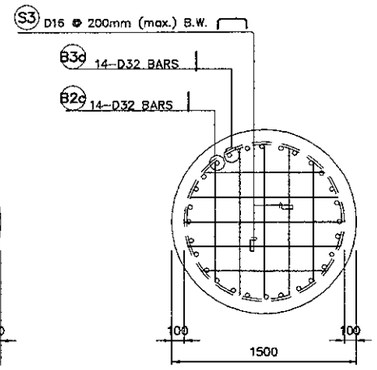

4 SECTION
SCALE 1:50

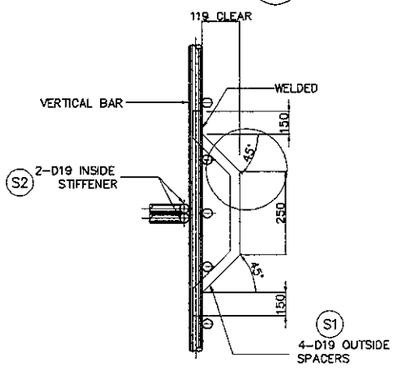

C DETAIL OF STIFFENER/SPACER
NOT TO SCALE

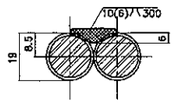

SECTION–D1
SINGLE FLARED–V–GROOVE WELD

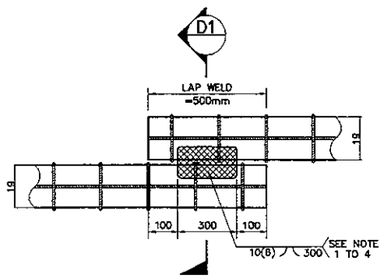

DIRECT LAP JOINT WITH BARS IN CONTACT

D DETAIL OF SPIRAL REINF. FULL LAP–WELD CONNECTION
NOT TO SCALE

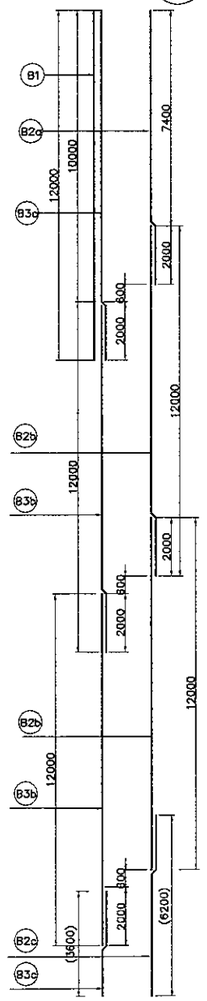

F SCHEMATIC DETAIL
NOT TO SCALE

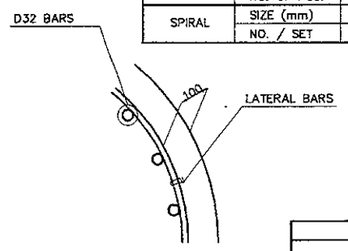

E TYPICAL BAR LAYOUT DETAIL
NOT TO SCALE

BORED PILE TYPE		BP–GF1
SIZE (mm)		Ø1500
MAIN BARS	SIZE (mm)	32
	NO. OF LAYERS	1.0
	NO. OF PCS.	42
SPIRAL	SIZE (mm)	19
	NO. / SET	

NOTES ON LAP–WELD CONNECTION :

1. SPIRAL REINFORCEMENT ARE LAP–WELD CONNECTED (FLARED–V–GROOVE TYPE)
2. WELDING SHOULD CONFORM TO AWS (D1.4) "STRUCTURAL WELDING CODE REINFORCED STEEL."
3. USE ELECTRODE E90XX.
4. CARE SHOULD BE TAKEN NOT TO DAMAGE THE COLUMN MAIN BARS DURING WELDING.

NOTES :

1. ALL DIMENSIONS ARE IN MILIMETERS.
2. BORED PILE MAIN BARS ARE PROVIDED WITHOUT ANY SPLICE. HOWEVER SPLICING OF MAIN BARS BY MECHANICAL COUPLERS ARE ALLOWED WITH PERMISSION FROM THE STRUCTURAL ENGINEER.
3. CONCRETE : fc' = 30MPa
4. REINFORCING STEEL=
   D51 : YIELD STRENGTH = 345 N/mm2
   OTHERS : YIELD STRENGTH = 390 N/mm2

LOCATION	DIMENSION A (mm)	B (mm)	C (mm)	D (mm)	E (mm)	n
P14 & P15	34000	33750	1000	32000	750	16

LOCATION	DIMENSION A1 (mm)	A2 (mm)	A3 (mm)	A4 (mm)	A5 (mm)	n1	n2	n3	n4	n5
P14 & P15	4200	3150	4600	5400	1775	60	14	46	24	8

BAR BENDING DIAGRAM

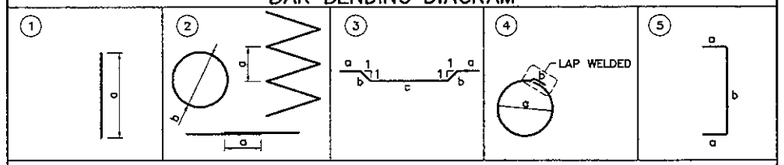

SCHEDULE OF REINFORCEMENT

LOCATION	BAR MARK	SIZE (mm)	BEND TYPE	DIMENSION(mm) OUT TO OUT a	b	c	d	e	f	LENGTH (mm)	NO. REQ'D.	UNIT WEIGHT (kg/m)	WEIGHT (kg)
PIER P14 & P15 DIA = 1500 mm L = 34000 mm	B1	32	1	9400						12000	14	6.31	1060
	B2a	32	1	12000						9400	14	6.31	830
	B2b	32	1	12000						12000	28	6.31	2120
	B2c	32	1	6200						6200	14	6.31	548
	B3a	32	1	12000						12000	14	6.31	1060
	B3b	32	1	12000						12000	28	6.31	2120
	B3c	32	1	3600						3600	14	6.31	318
	B4a	19	2	50	1300	500				259509	1	2.23	579
	B4b	19	2	225	1300	500				59559	1	2.23	133
	B4c	19	2	100	1300	500				587085	1	2.23	1309
	B4d	19	2	225	1300	500				204204	1	2.23	455
	B4e	19	2	225	1300	500				34034	1	2.23	76
	S1	19	3	150	170	250				890	68	2.23	135
	S2	19	4	1216	170					3990	34	2.23	303
	S3	16	5	150	1870					2170	10	1.58	34
										TOTAL WEIGHT / PILE = 11,080 Kgs.			
										TOTAL VOLUME FOR BOREPILES = 60.08 Kgs.			

THE SCHEDULE OF REINFORCEMENT SHOWN ON THE BAR BENDING DIAGRAM TABLE IS FOR REFERENCE ONLY. THE CONTRACTOR SHOULD CHECK AND VERIFY ALL DIMENSIONS, SIZES AND QUANTITIES OF REINFORCEMENT.

BORED PILE REINFORCEMENT DETAIL (PIER P14 & P15)
SCALE AS SHOWN

PRINTED: OCT. 18, 2006

JAPAN INTERNATIONAL COOPERATION AGENCY KATAHIRA & ENGINEERS INTERNATIONAL	DESIGNED BY	CHECKED BY	SUBMITTED BY	REPUBLIC OF INDONESIA MINISTRY OF PUBLIC WORKS DIRECTORATE GENERAL OF HIGHWAYS	PROJECT AND LOCATION :	SCALE :	DRAWING TITLE :	DRAWING NO :
	Name A. GOURLEY	Name T. OKUMURA	Name M. KIUCHI		DETAILED DESIGN STUDY OF NORTH JAVA CORRIDOR FLYOVER PROJECT GEBANG FLYOVER - CONTRACT PACKAGE 2 (NAGREG - GEBANG) WEST JAVA PROVINCE	1 : 40 1 : 100	**BORED PILE REINF. DETAILS FOR ABUTMENT A1 (Ø1800mm)**	GSB-053
	Sign	Sign	Sign	APPROVED BY Ir. HERRY VAZA M,Eng.Sc Sign NIP. : 110038400 Date		FULL SIZE A3		SHEET NO : 53 / 57
	Date	Date	Date					

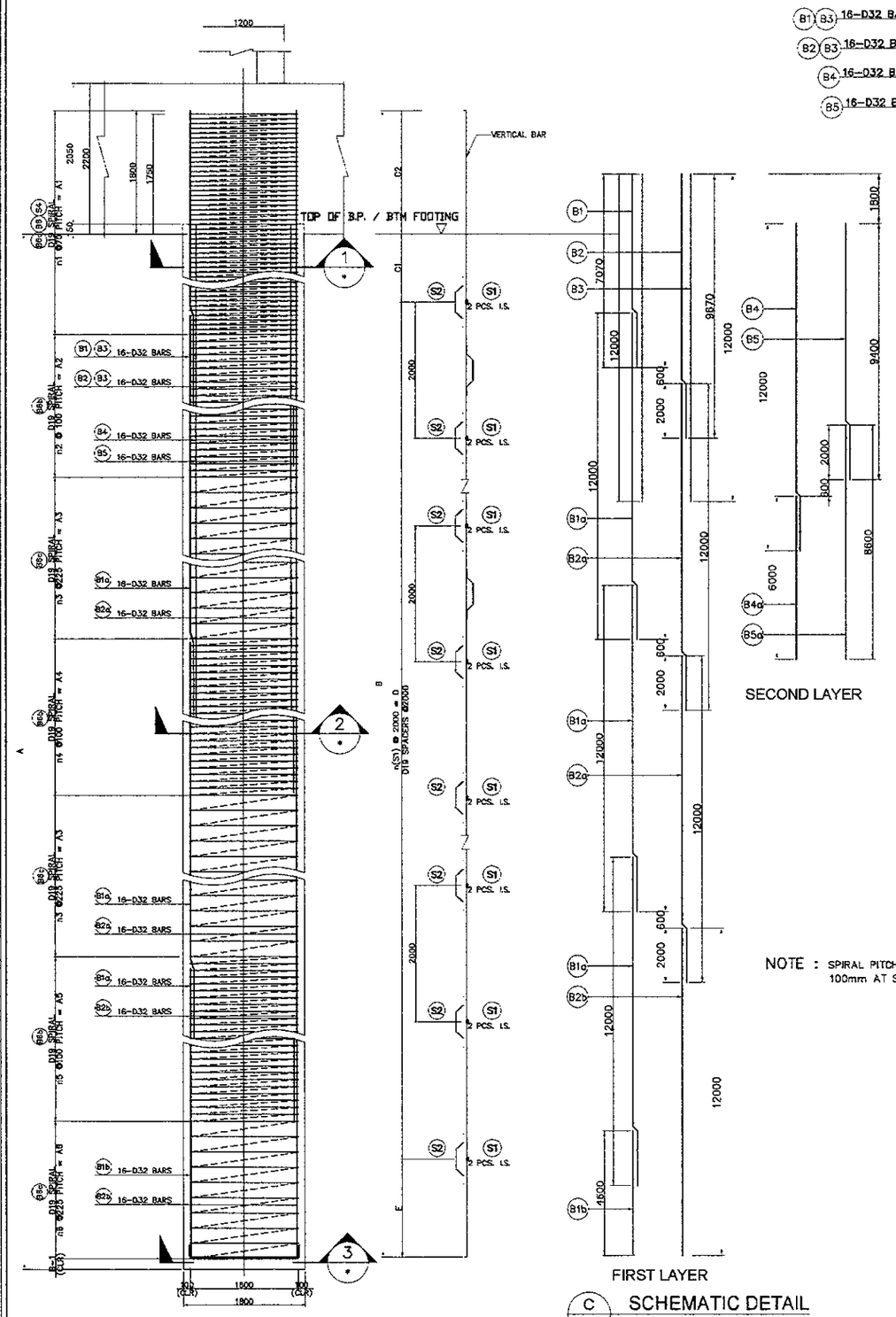

A ELEVATION SCALE 1 : 100

B LAYOUT OF STIFFENER SCALE 1 : 100

C SCHEMATIC DETAIL NOT TO SCALE

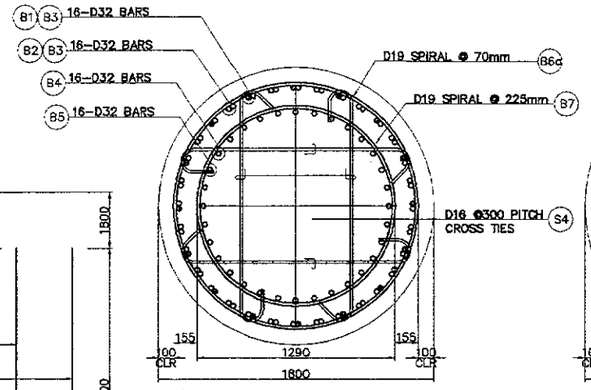

1 SECTION SCALE 1 : 40

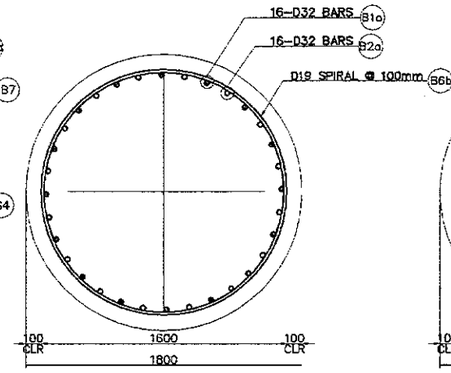

2 SECTION SCALE 1 : 40

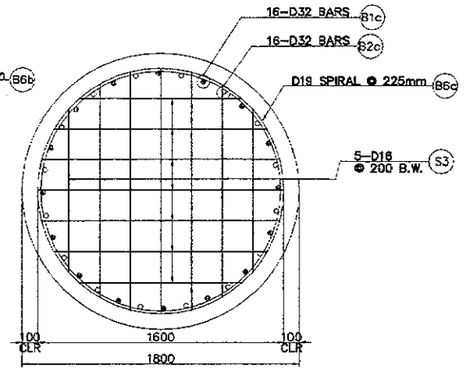

3 SECTION SCALE 1 : 40

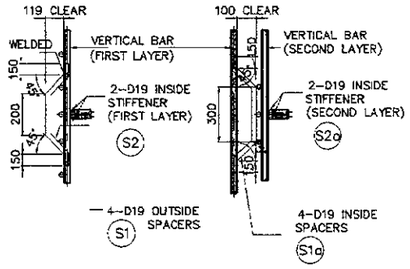

E DETAIL OF STIFFENER/SPACER NOT TO SCALE

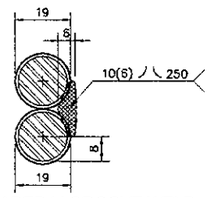

DOUBLE FLARED-V-GROOVE WELD SECTION - D1

NOTE : SPIRAL PITCH SHALL BE 100mm AT SPLICE LOCATION.

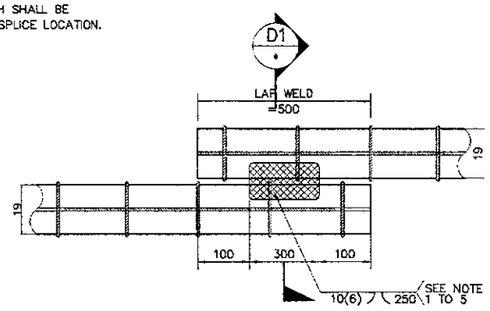

DIRECT LAP JOINT WITH BARS IN CONTACT

D DETAILS OF SPIRAL REINF. FULL LAP-WELD CONNECTION NOT TO SCALE

1 BORED PILE REINF. DETAILS FOR ABUT. A1 (Ø1800mm) SCALE AS SHOWN

NOTES ON LAP-WELD CONNECTION :

1. SPIRAL REINFORCEMENT ARE LAP-WELD CONNECTED (FLARED-V-GROOVE TYPE)
2. WELDING SHOULD CONFORM TO AWS (D1.4) *STRUCTURAL WELDING CODE REINFORCED STEEL.*
3. USE ELECTRODE E90XX.
4. CARE SHOULD BE TAKEN NOT TO DAMAGE THE COLUMN MAIN BARS DURING WELDING.

NOTES :

1. ALL DIMENSIONS ARE IN MILIMETERS.
2. BORED PILE MAIN BARS ARE PROVIDED WITHOUT ANY SPLICE. HOWEVER SPLICING OF MAIN BARS BY MECHANICAL COUPLERS ARE ALLOWED WITH PERMISSION FROM THE STRUCTURAL ENGINEER.
3. CONCRETE : fc' = 30MPa
4. REINFORCING STEEL:= D51 : YIELD STRENGTH = 345 N/mm2
   OTHERS : YIELD STRENGTH = 390 N/mm2

LOCATION	DIMENSION								
	A (mm)	B (mm)	B-1 (mm)	C1 (mm)	C2 (mm)	D (mm)	E (mm)	n (S1)	n(S1a)
A1	38000	39670	130	1000	1800	36000	870	18	7

LOCATION	DIMENSION											
	A1 (mm)	A2 (mm)	A3 (mm)	A4 (mm)	A5 (mm)	A6 (mm)	n1	n2	n3	n4	n5	n6
A1	5390	4500	5175	4700	2400	2475	77	45	23	47	24	11

BAR BENDING DIAGRAM

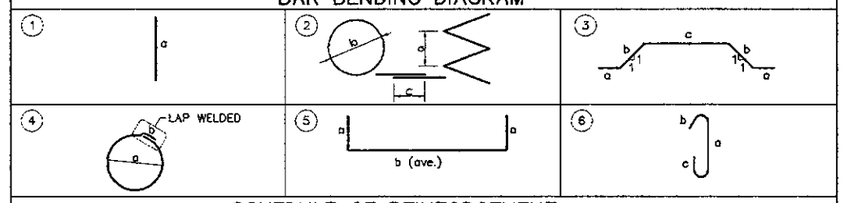

SCHEDULE OF REINFORCEMENT

LOCATION	BAR MARK	SIZE (mm)	BEND TYPE	DIMENSION(mm) OUT TO OUT a	b	c	d	e	f	LENGTH (mm)	NO. REQ'D.	UNIT WEIGHT (kg/m)	TOTAL WEIGHT (kg)	VOLUME CONCRETE (kg)
ABUTMENT A1	B1	32	1	7070						7070	16	6.31	714	96.71
	B1a	32	1	12000						12000	48	6.31	3635	
	B1b	32	1	4600						4600	16	6.31	464	
	B2	32	1	9670						9670	16	6.31	976	
	B2a	32	1	12000						12000	32	6.31	2423	
	B2b	32	1	12000						12000	16	6.31	1212	
	B3	32	1	12000						12000	32	6.31	2423	
	B4	32	1	12000						12000	16	6.31	1212	
	B4a	32	1	6000						6000	16	6.31	606	
	B5	32	1	9400						9400	16	6.31	949	
	B5a	32	1	8600						8600	16	6.31	868	
	B6a	19	2	70	1600	500				408407	1	2.23	911	
	B6b	19	2	100	1600	500				607375	1	2.23	1355	
	B6c	19	2	225	1600	500				298451	1	2.23	666	
	B7	19	2	225	1290	500				303949	1	2.23	678	
	S1	19	3	150	170	250				890	76	2.23	151	
	S1a	19	3	150	150	350				950	32	2.23	68	
	S2	19	4	1498	170					4876	38	2.23	413	
	S2a	19	4	1188	170					3902	16	2.23	139	
	S3	16	5	150	1395					1695	14	1.58	37	
	S4	16	6	1500	316	380				2196	79	1.58	250	
							TOTAL WEIGHT PER PILE =						20,152 Kgs	

THE REINFORCEMENT SHOWN ON THIS TABLE IS FOR REFERENCE ONLY. THE CONTRACTOR SHOULD CHECK AND VERIFY ALL DIMENSIONS, SIZES AND QUANTITIES OF REINFORCEMENT.

PRINTED: OCT. 25, 2006

JAPAN INTERNATIONAL COOPERATION AGENCY / KATAHIRA & ENGINEERS INTERNATIONAL	DESIGNED BY	CHECKED BY	SUBMITTED BY	REPUBLIC OF INDONESIA MINISTRY OF PUBLIC WORKS DIRECTORATE GENERAL OF HIGHWAYS	PROJECT AND LOCATION :	SCALE :	DRAWING TITLE :	DRAWING NO :
	Name A. GOURLEY	Name T. OKUMURA	Name M. KIUCHI		DETAILED DESIGN STUDY OF NORTH JAVA CORRIDOR FLYOVER PROJECT GEBANG FLYOVER - CONTRACT PACKAGE 2 (NAGREG - GEBANG) WEST JAVA PROVINCE	1 : 40 1 : 100	BORED PILE REINF. DETAILS FOR ABUTMENT A2 (Ø1800mm)	GSB-054
	Sign	Sign	Sign	APPROVED BY Ir. HERRY VAZA M,Eng.Sc Sign		FULL SIZE A3		SHEET NO : 54 / 57
	Date	Date	Date	NIP. : 110038400 Date				

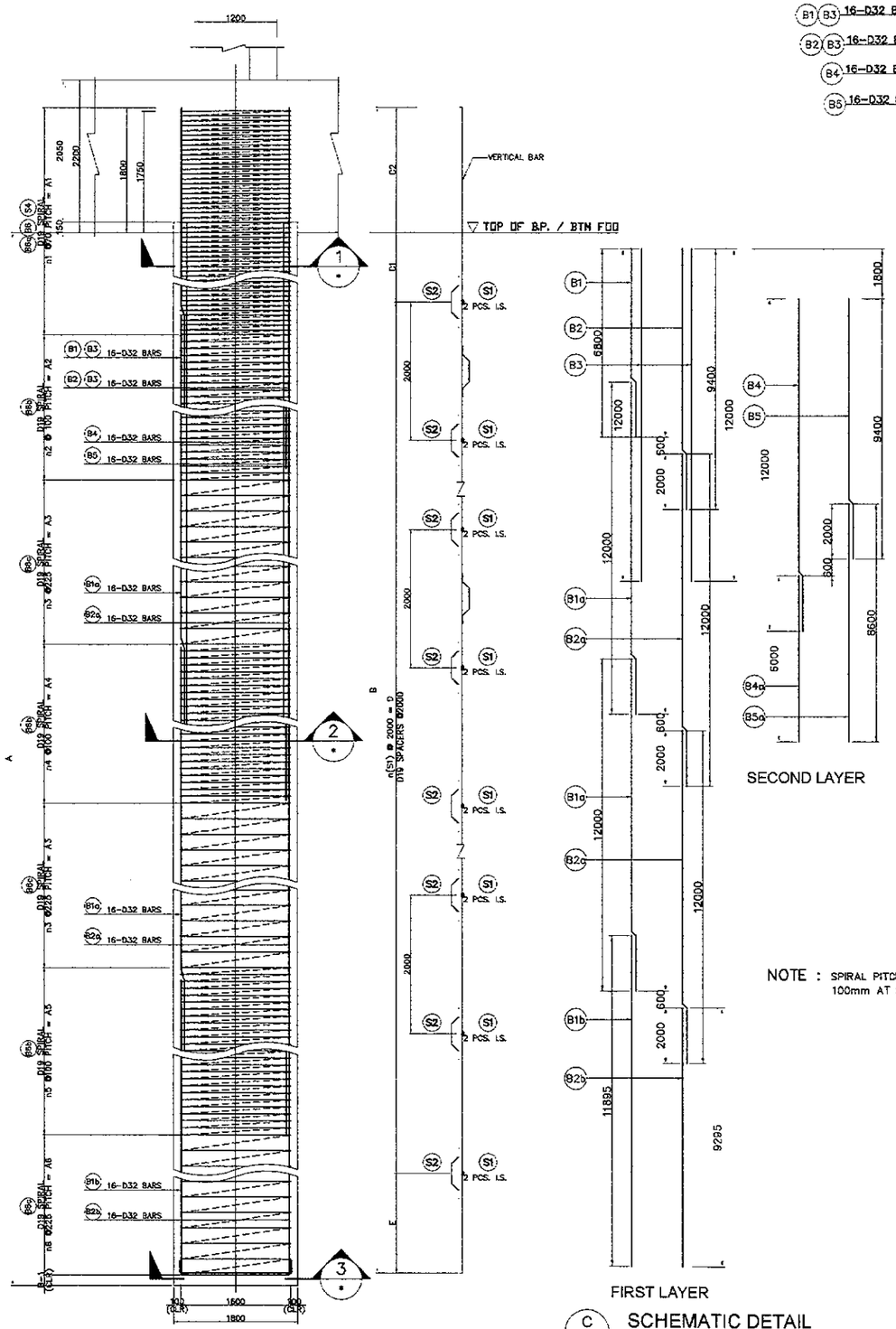

A ELEVATION SCALE 1 : 100

B LAYOUT OF STIFFENER SCALE 1 : 100

C SCHEMATIC DETAIL NOT TO SCALE

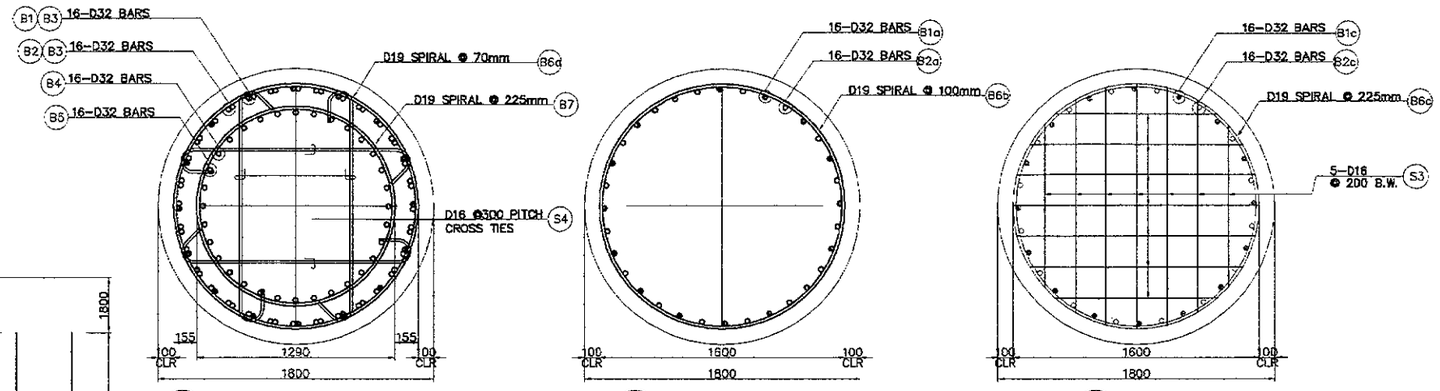

1 SECTION SCALE 1 : 40

2 SECTION SCALE 1 : 40

3 SECTION SCALE 1 : 40

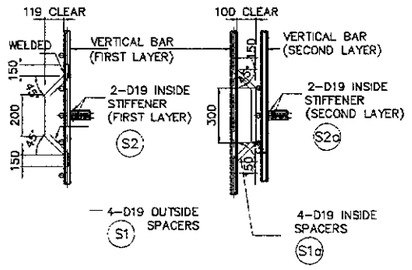

E DETAIL OF STIFFENER/SPACER NOT TO SCALE

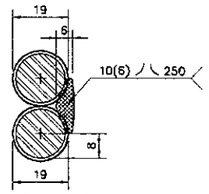

DOUBLE FLARED-V-GROOVE WELD SECTION - D1

NOTE : SPIRAL PITCH SHALL BE 100mm AT SPLICE LOCATION.

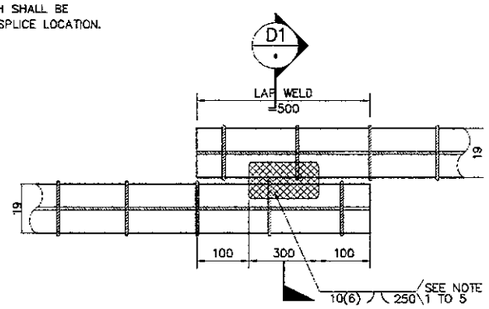

DIRECT LAP JOINT WITH BARS IN CONTACT

D DETAILS OF SPIRAL REINF. FULL LAP-WELD CONNECTION NOT TO SCALE

NOTES ON LAP-WELD CONNECTION :

1. SPIRAL REINFORCEMENT ARE LAP-WELD CONNECTED (FLARED-V-GROOVE TYPE)
2. WELDING SHOULD CONFORM TO AWS (D1.4) "STRUCTURAL WELDING CODE REINFORCED STEEL."
3. USE ELECTRODE E90XX.
4. CARE SHOULD BE TAKEN NOT TO DAMAGE THE COLUMN MAIN BARS DURING WELDING.

NOTES :

1. ALL DIMENSIONS ARE IN MILIMETERS.
2. BORED PILE MAIN BARS ARE PROVIDED WITHOUT ANY SPLICE. HOWEVER SPLICING OF MAIN BARS BY MECHANICAL COUPLERS ARE ALLOWED WITH PERMISSION FROM THE STRUCTURAL ENGINEER.
3. CONCRETE : fc' = 30MPa
4. REINFORCING STEEL= D51 : YIELD STRENGTH = 345 N/mm2
   OTHERS : YIELD STRENGTH = 390 N/mm2

LOCATION	DIMENSION A (mm)	B (mm)	B-1 (mm)	C1 (mm)	C2 (mm)	D (mm)	E (mm)	n (S1)	n(S1a)
A2	35000	36695	105	1000	1800	32000	1895	16	7

LOCATION	DIMENSION A1 (mm)	A2 (mm)	A3 (mm)	A4 (mm)	A5 (mm)	A6 (mm)	n1	n2	n3	n4	n5	n6
A2	5390	4500	5175	4700	4800	6975	77	45	23	47	48	31

BAR BENDING DIAGRAM

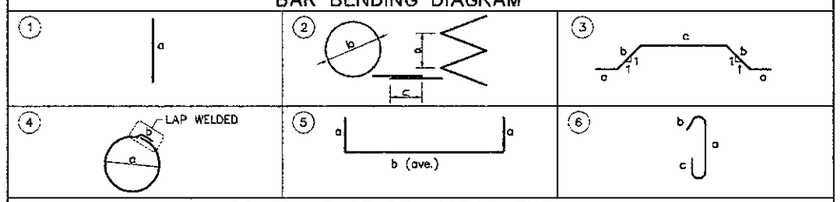

SCHEDULE OF REINFORCEMENT

LOCATION	BAR MARK	SIZE (mm)	BEND TYPE	DIMENSION(mm) OUT TO OUT a	b	c	d	e	f	LENGTH (mm)	NO. REQ'D.	UNIT WEIGHT (kg/m)	TOTAL WEIGHT (kg)	VOLUME CONCRETE (kg)
ABUTMENT A2	B1	32	1	6800						6800	16	6.31	687	89.08
	B1a	32	1	12000						12000	32	6.31	2423	
	B1b	32	1	11895						11895	16	6.31	1201	
	B2	32	1	9400						9400	16	6.31	949	
	B2a	32	1	12000						12000	32	6.31	2423	
	B2b	32	1	9295						9295	16	6.31	938	
	B3	32	1	12000						12000	32	6.31	2423	
	B4	32	1	12000						12000	16	6.31	1212	
	B4a	32	1	6000						8000	16	6.31	606	
	B5	32	1	9400						9400	16	6.31	949	
	B5a	32	1	8600						8600	16	6.31	868	
	B6a	19	2	70	1600	500				408407	1	2.23	911	
	B6b	19	2	100	1600	500				733038	1	2.23	1635	
	B6c	19	2	225	1600	500				240855	1	2.23	537	
	B7	19	2	225	1290	500				303949	1	2.23	678	
	S1	19	3	150	170	250				890	68	2.23	135	
	S1a	19	3	150	150	350				950	28	2.23	59	
	S2	19	4	1498	170					4876	34	2.23	370	
	S2a	19	4	1188	170					3902	14	2.23	122	
	S3	16	5	150	1395					1695	14	1.58	37	
	S4	16	6	1500	316	380				2195	72	1.58	250	
							TOTAL WEIGHT PER PILE =						19,413 Kgs	

THE REINFORCEMENT SHOWN ON THIS TABLE IS FOR REFERENCE ONLY. THE CONTRACTOR SHOULD CHECK AND VERIFY ALL DIMENSIONS, SIZES AND QUANTITIES OF REINFORCEMENT.

1 BORED PILE REINF. DETAILS FOR ABUT. A2 (Ø1800mm) SCALE AS SHOWN

JICA JAPAN INTERNATIONAL COOPERATION AGENCY / KEI KATAHIRA & ENGINEERS INTERNATIONAL	DESIGNED BY	CHECKED BY	SUBMITTED BY	REPUBLIC OF INDONESIA MINISTRY OF PUBLIC WORKS DIRECTORATE GENERAL OF HIGHWAYS	PROJECT AND LOCATION :	SCALE :	DRAWING TITLE :	DRAWING NO :
	Name A. GOURLEY	Name T. OKUMURA	Name M. KIUCHI		DETAILED DESIGN STUDY OF NORTH JAVA CORRIDOR FLYOVER PROJECT GEBANG FLYOVER - CONTRACT PACKAGE 2 (NAGREG - GEBANG) WEST JAVA PROVINCE		SCHEDULE BORED PILE	GSB-55
	Sign	Sign	Sign	APPROVED BY Ir. HERRY VAZA M,Eng.Sc				SHEET NO :
	Date	Date	Date	NIP. : 110038400 Date		FULL SIZE A3		55/ 57

SCHEDULE OF BORED PILE

BP-GF01

PIER P1, P2, P3 & P13
PIER P14 & P15

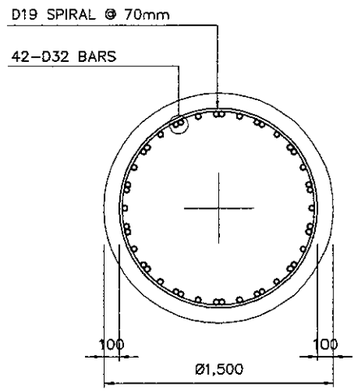

COLUMN TYPE		BP-GF01
SIZE (mm)		1500 ø
MAIN BARS	SIZE (mm)	32
	NO. LAYERS	1
	NO. OF PCS.	42
SPIRAL	SIZE (mm)	19
STEEL RATIO, ρ		

BP-GF02

PIER P4, P5, P6 & P12

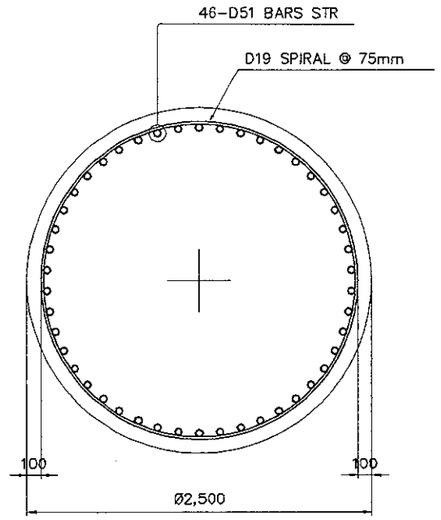

COLUMN TYPE		BP-GF02
SIZE (mm)		2500 ø
MAIN BARS	SIZE (mm)	32
	NO. LAYERS	1
	NO. OF PCS.	46
SPIRAL	SIZE (mm)	19
STEEL RATIO, ρ		

BP-GF03

PIER P7

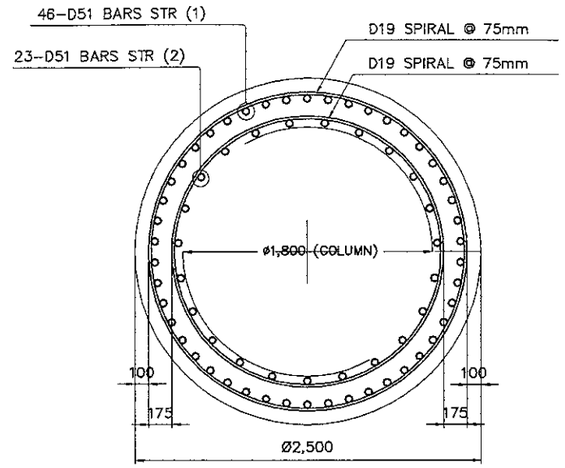

COLUMN TYPE		BP-GF03
SIZE (mm)		2500 ø
MAIN BARS	SIZE (mm)	32
	NO. LAYERS	1
	NO. OF PCS(1)	46
	NO. OF PCS(2)	23
SPIRAL	SIZE (mm)	19
STEEL RATIO, ρ		

BP-GF04

PIER P8

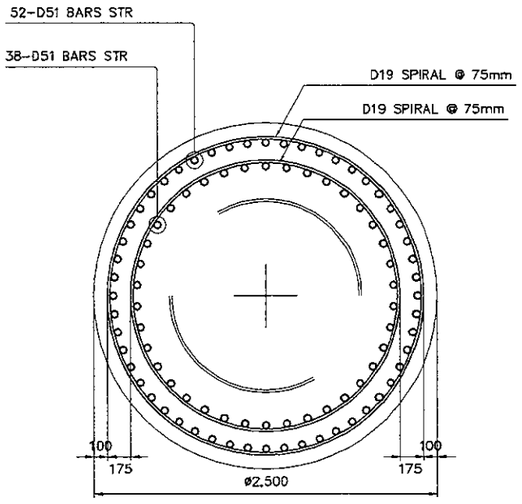

COLUMN TYPE		BP-GF04
SIZE (mm)		2500 ø
MAIN BARS	SIZE (mm)	32
	NO. LAYERS	2
	NO. OF PCS(1)	52
	NO. OF PCS(2)	38
SPIRAL	SIZE (mm)	19
STEEL RATIO, ρ		

BP-GF05

PIER P9, P10 & P11

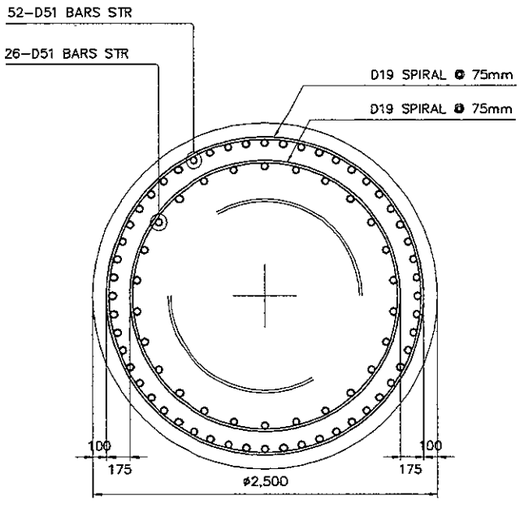

COLUMN TYPE		BP-GF05
SIZE (mm)		2500 ø
MAIN BARS	SIZE (mm)	32
	NO. LAYERS	2
	NO. OF PCS(1)	52
	NO. OF PCS(2)	26
SPIRAL	SIZE (mm)	19
STEEL RATIO, ρ		

NOTES :

1. LAP SPLICE OF COLUMN MAIN BARS WILL NOT BE ALLOWED IN ANY LOCATION.

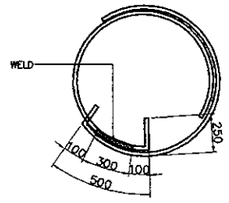

PLAN

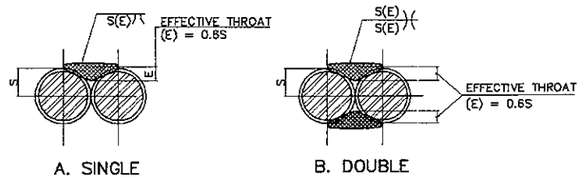

A. SINGLE B. DOUBLE

WHERE: S = RADIUS OF REINFORCING BAR
E = EFFECTIVE THROAT

SECTIONS

DETAILS OF LAP WELD SPLICE FOR SPIRAL

PRINTED: OCT. 18, 2006

JAPAN INTERNATIONAL COOPERATION AGENCY KATAHIRA & ENGINEERS INTERNATIONAL	DESIGNED BY	CHECKED BY	SUBMITTED BY	REPUBLIC OF INDONESIA MINISTRY OF PUBLIC WORKS DIRECTORATE GENERAL OF HIGHWAYS	PROJECT AND LOCATION :	SCALE :	DRAWING TITLE :	DRAWING NO :
	Name: A. GOURLEY	Name: T. OKUMURA	Name: M. KIUCHI		DETAILED DESIGN STUDY OF NORTH JAVA CORRIDOR FLYOVER PROJECT GEBANG FLYOVER - CONTRACT PACKAGE 2 (NAGREG - GEBANG) WEST JAVA PROVINCE	1 : 20 1 : 40 1 : 50 1 : 100	TYPICAL APPROACH SLAB DETAILS ABUTMENT A1 & A2	GSB-056
	Sign	Sign	Sign	APPROVED BY: Ir. HERRY VAZA M,Eng.Sc				SHEET NO :
	Date	Date	Date	NIP. : 110038400 Sign / Date		FULL SIZE A3		56 / 57

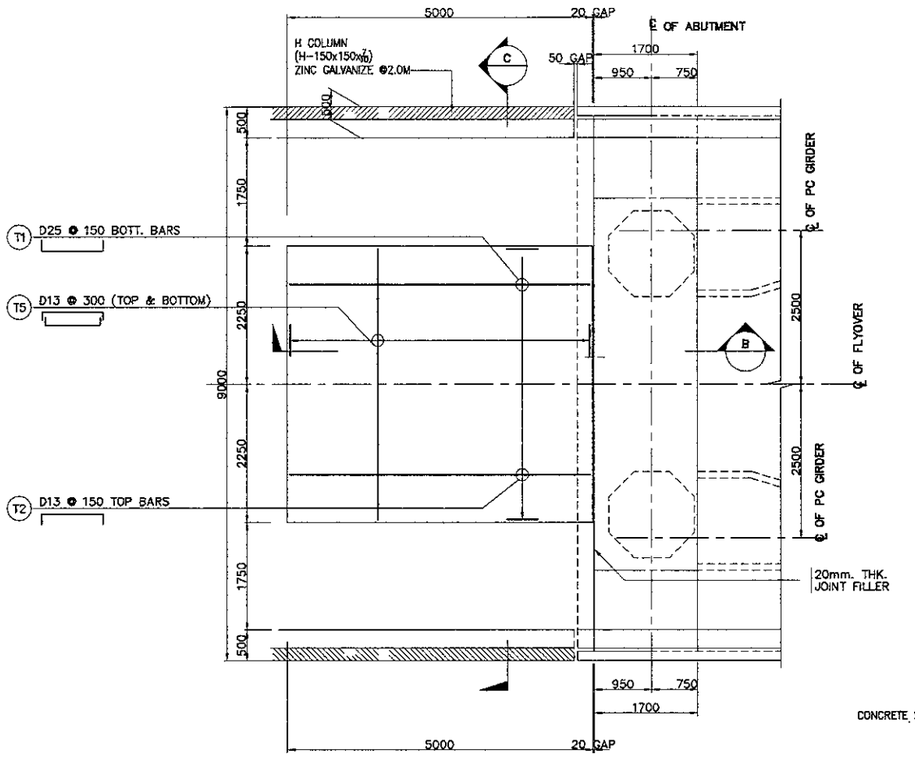

A PLAN
SCALE 1:100

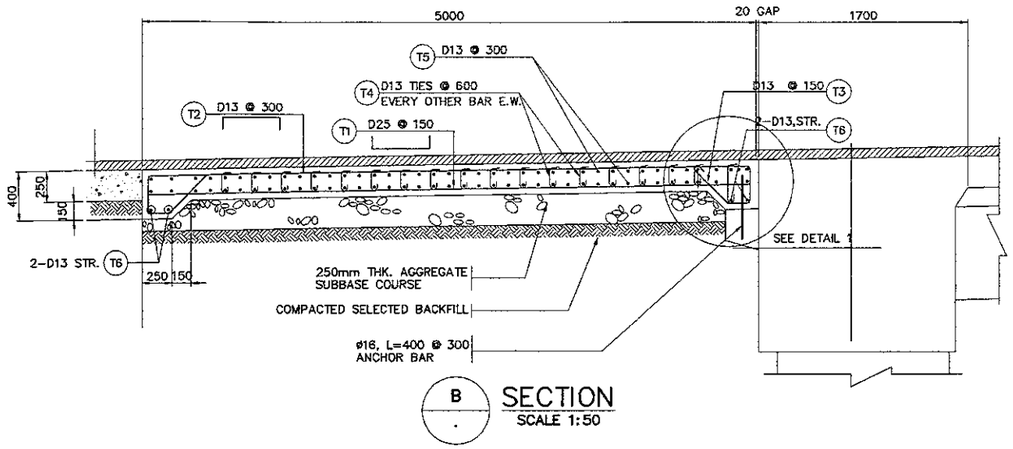

B SECTION
SCALE 1:50

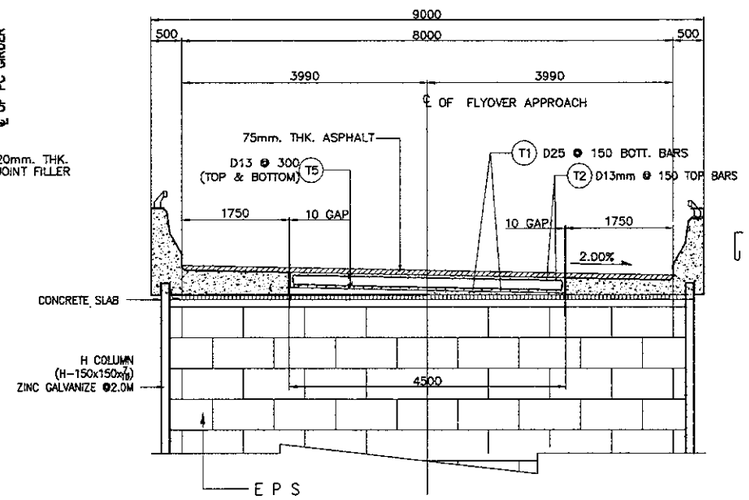

C SECTION @ APPROACH SLAB
SCALE 1:100

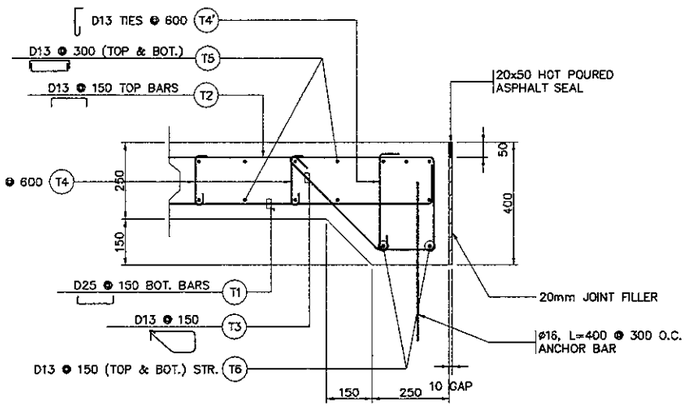

1 DETAIL
SCALE 1:20

ESTIMATE OF QUANTITIES (PER APPROACH SLAB)

BAR BENDING DIAGRAM

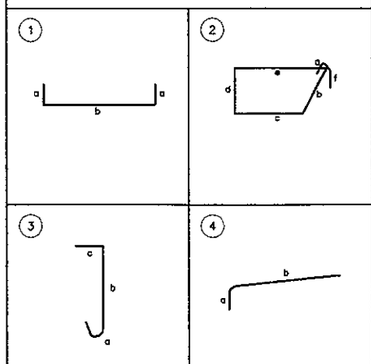

SCHEDULE OF REINFORCEMENT

LOCATION	BAR MARK	D (mm)	BEND TYPE	DIMENSION(mm) OUT TO OUT a	b	c	d	e	f	LENGTH (mm)	NO. REQ'D.	UNIT WEIGHT (kg/m.)	WEIGHT (kg)
TRANSITION SLAB	T1	25	1	100	4900					5100	30	3.85	609
	T2	13	1	100	4900					5100	30	1.04	164
	T3	13	2	150	300	250	300	550	150	1700	30	1.04	55
	T4	13	3	150	150	200				500	72	1.04	33
	T4'	13	3	150	300	200				650	16	1.04	11
	T5	13	1	100	4400					4600	34	1.04	163
	T6	13	4	100	4400					4500	4	1.04	19
										TOTAL WEIGHT			= 1,056 kg.
VOLUME OF CONCRETE	APPROACH SLAB												= 5.625 cu.m.
										TOTAL VOLUME A1 + A2 = 11.250 cu.m.			

THE REINFORCEMENT SHOWN ON THIS TABLE IS FOR REFERENCE ONLY. THE CONTRACTOR SHOULD CHECK AND VERIFY ALL DIMENSIONS, SIZES AND QUANTITIES OF REINFORCEMENT.

NOTES :
1. ALL DIMENSION ARE IN MILIMETERS.
2. CONCRETE : fc' = 24 MPa
3. REINFORCING STEEL : YIELD STRENGTH = 390 N/mm2
4. QUANTITY SHOWN ON TABLE IS FOR ONE APPROACH SLAB ONLY

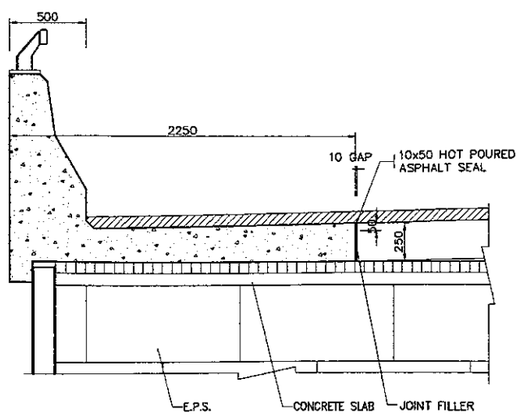

2 DETAIL
SCALE 1:40

JAPAN INTERNATIONAL COOPERATION AGENCY KATAHIRA & ENGINEERS INTERNATIONAL	DESIGNED BY	CHECKED BY	SUBMITTED BY	REPUBLIC OF INDONESIA MINISTRY OF PUBLIC WORKS DIRECTORATE GENERAL OF HIGHWAYS	PROJECT AND LOCATION :	SCALE :	DRAWING TITLE :	DRAWING NO :
	Name: A. GOURLEY	Name: T. OKUMURA	Name: M. KIUCHI		DETAILED DESIGN STUDY OF NORTH JAVA CORRIDOR FLYOVER PROJECT GEBANG FLYOVER - CONTRACT PACKAGE 2 (NAGREG - GEBANG) WEST JAVA PROVINCE	1 : 200 1 : 1000	SOIL IMPROVEMENT	GSB-057
	Sign	Sign	Sign	APPROVED BY: Ir. HERRY VAZA M,Eng.Sc NIP. : 110038400				SHEET NO :
	Date	Date	Date	Sign / Date		FULL SIZE A3		57 / 57

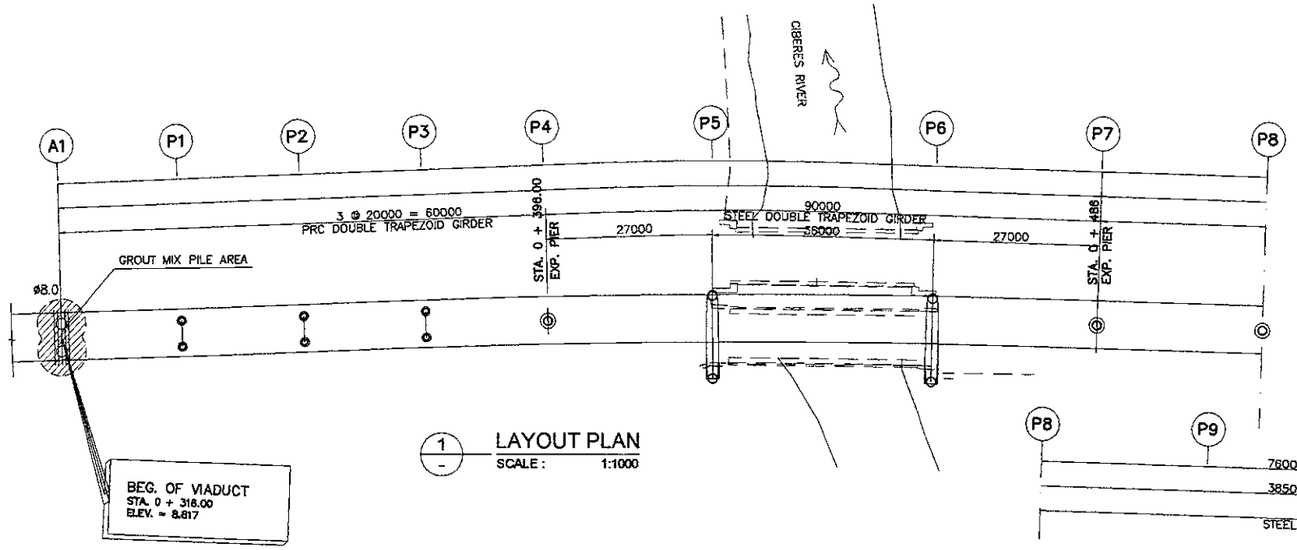

1 LAYOUT PLAN
SCALE : 1:1000

SCHEDULE OF SOIL TREATMENT

PIER	ELEVATION TOP OF PILE	ELEVATION BOTTON OF GROUT MIX PILE	NOS OF GROUT MIX	VOLUME OF GROUT MIX PILE
	m	m		m³
A1	−0.160	−5.160	101	396.626
A2	−0.104	−5.104	101	396.626
		TOTALS	202	793.252

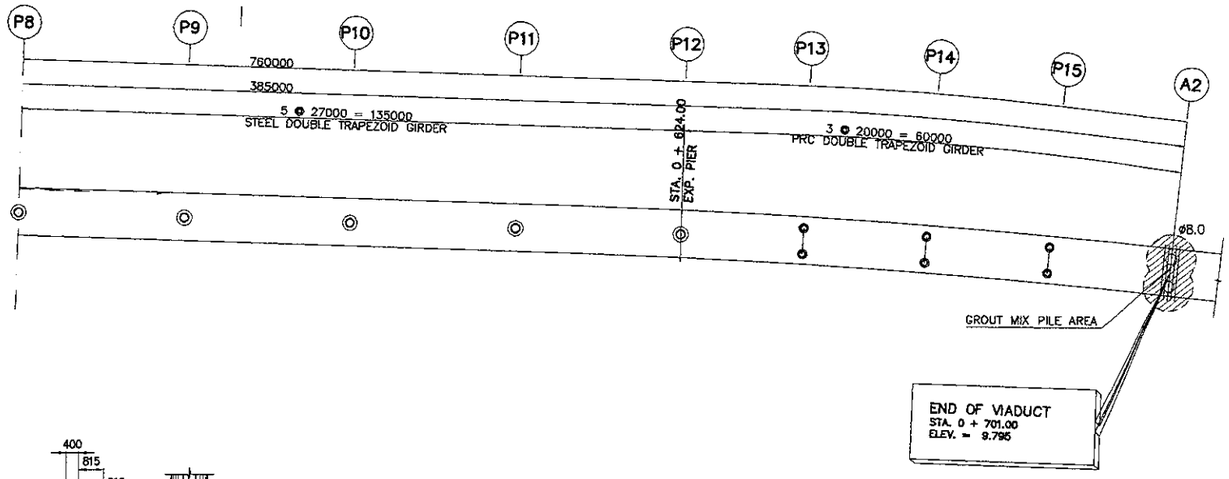

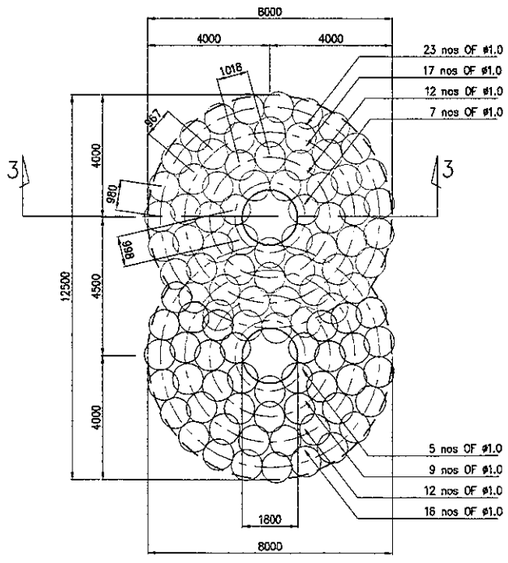

2 PLAN ON A1, A2
SCALE : 1:200

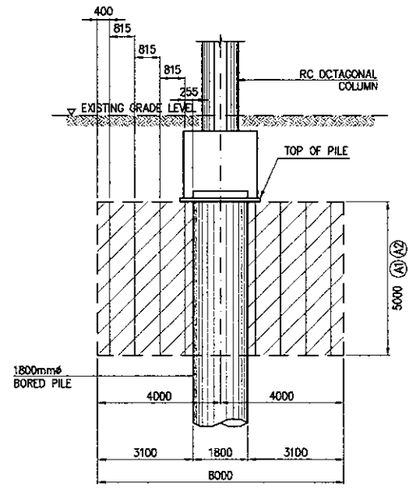

3 SECTION
SCALE : 1:200

NOTES :

1). FOR GENERAL NOTES REFER TO DRAWING NO. TGE 011
2). ALL DIMENSION ARE IN MM
3). ALL ELEVATION ARE IN M
4). GROUT MIX PILE SHALL BE ACHEIVED BY MEANS OF A GROUT MIX METHOD PROPOSED BY THE CONTRACTOR IN ACCORDANCE WITH THE SPECIFICATION AND APPROVED BY THE ENGINEER

PRINTED: OCT. 18, 2006