JAPAN INTERNATIONAL
COOPERATION AGENCY

DIRECTORATE GENERAL OF HIGHWAY
MINISTRY OF PUBLIC WORKS
REPUBLIC OF INDONESIA

SUBSTRUCTURES

KATAHIRA & ENGINEERS INTERNATIONAL

JAPAN INTERNATIONAL COOPERATION AGENCY KATAHIRA & ENGINEERS INTERNATIONAL	DESIGNED BY	CHECKED BY	SUBMITTED BY	REPUBLIC OF INDONESIA MINISTRY OF PUBLIC WORKS DIRECTORATE GENERAL OF HIGHWAYS	PROJECT AND LOCATION :	SCALE :	DRAWING TITLE :	DRAWING NO :
	Name A. GOURLEY	Name T. OKUMURA	Name M. KIUCHI		DETAILED DESIGN STUDY OF NORTH JAVA CORRIDOR FLYOVER PROJECT GEBANG FLYOVER - CONTRACT PACKAGE 2 (NAGREG - GEBANG) WEST JAVA PROVINCE	1 : 4000 1 : 100 1 : 40	ABUTMENT LAYOUT & DIMENSIONS (ABUT. A1)	GSB-001
	Sign	Sign	Sign	APPROVED BY Ir. HERRY VAZA M,Eng.Sc Sign				SHEET NO :
	Date	Date	Date	NIP. : 110038400 Date		FULL SIZE A3		01 / 57

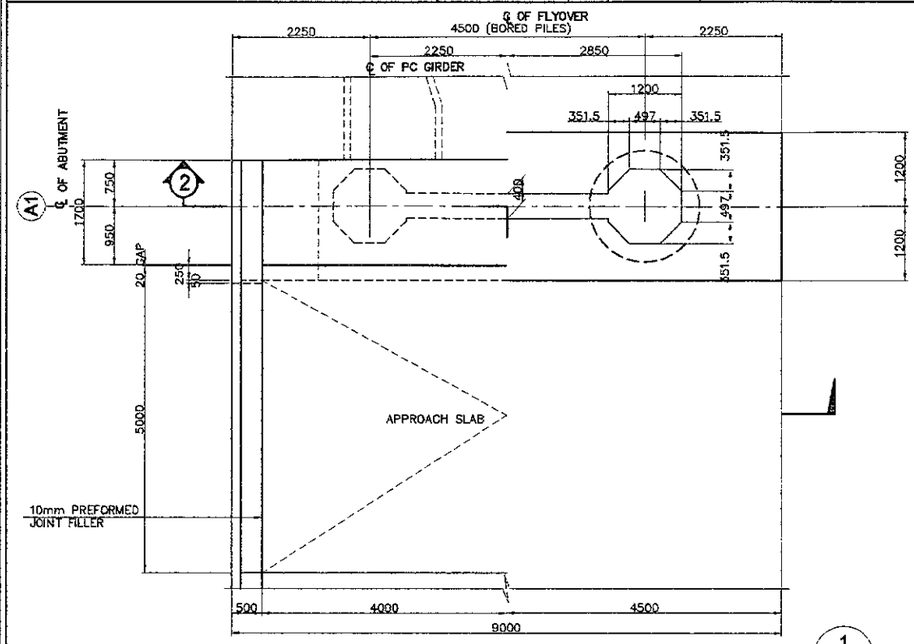

1 PLAN
SCALE 1:100

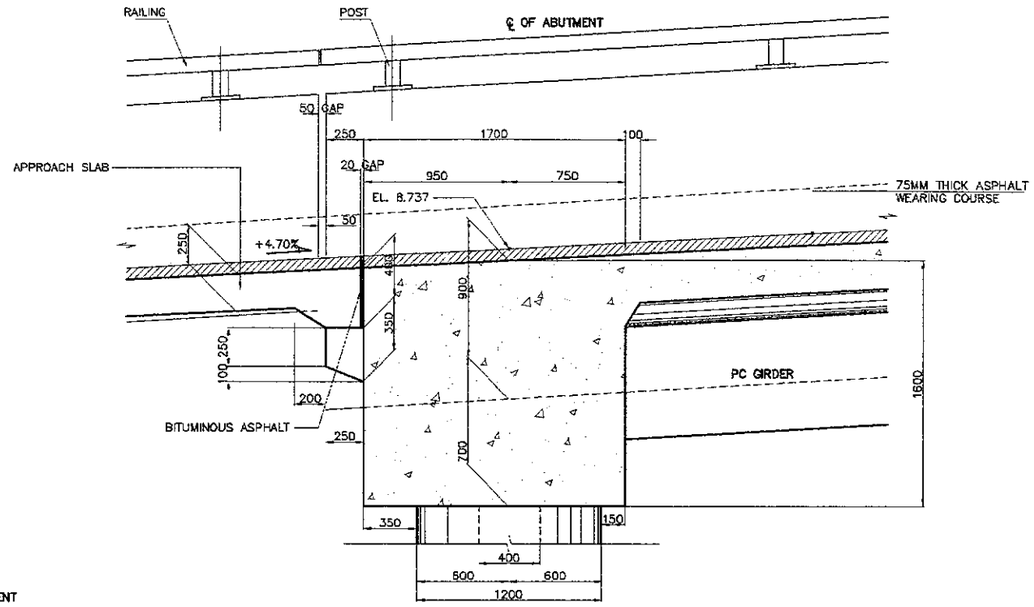

4 DETAIL
SCALE 1:40

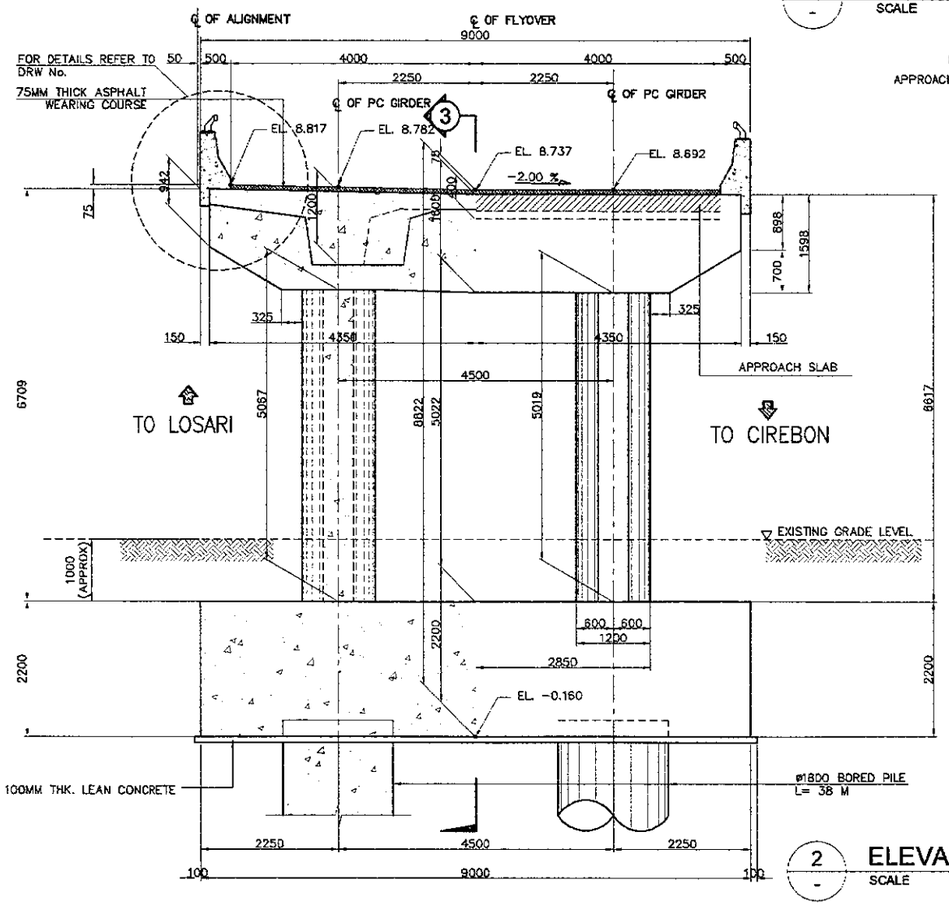

2 ELEVATION
SCALE 1:100

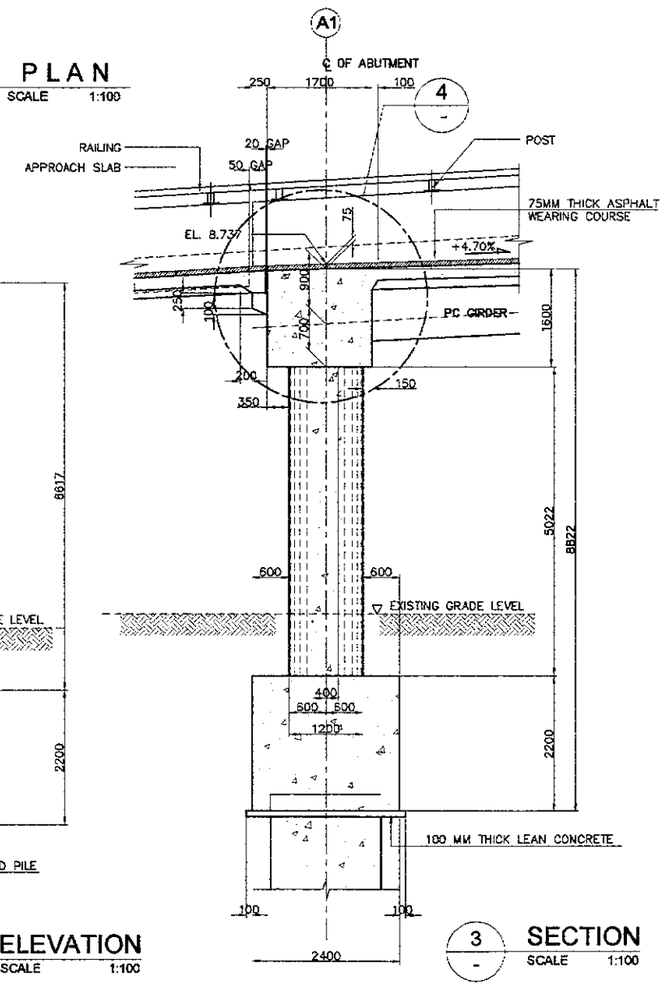

3 SECTION
SCALE 1:100

NOTES :
1. ALL DIMENSIONS ARE IN MILLIMETER
2. ELEVATIONS ARE IN METERS

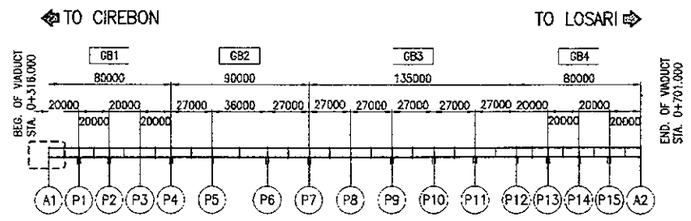

KEY PLAN
SCALE 1:4000

JICA JAPAN INTERNATIONAL COOPERATION AGENCY / KEI KATAHIRA & ENGINEERS INTERNATIONAL	DESIGNED BY	CHECKED BY	SUBMITTED BY	REPUBLIC OF INDONESIA MINISTRY OF PUBLIC WORKS DIRECTORATE GENERAL OF HIGHWAYS	PROJECT AND LOCATION :	SCALE :	DRAWING TITLE :	DRAWING NO :
	Name: A. GOURLEY	Name: T. OKUMURA	Name: M. KIUCHI	APPROVED BY: Ir. HERRY VAZA M,Eng.Sc NIP. : 110038400	DETAILED DESIGN STUDY OF NORTH JAVA CORRIDOR FLYOVER PROJECT GEBANG FLYOVER - CONTRACT PACKAGE 2 (NAGREG - GEBANG) WEST JAVA PROVINCE	1 : 40 1 : 60 1 : 150 1 : 4000 FULL SIZE A3	PIER LAYOUT P1,P2,P3,P13,P14,P15 (FIXED)	GSB-002
	Sign	Sign	Sign	Sign				SHEET NO : 02 / 57
	Date	Date	Date	Date				

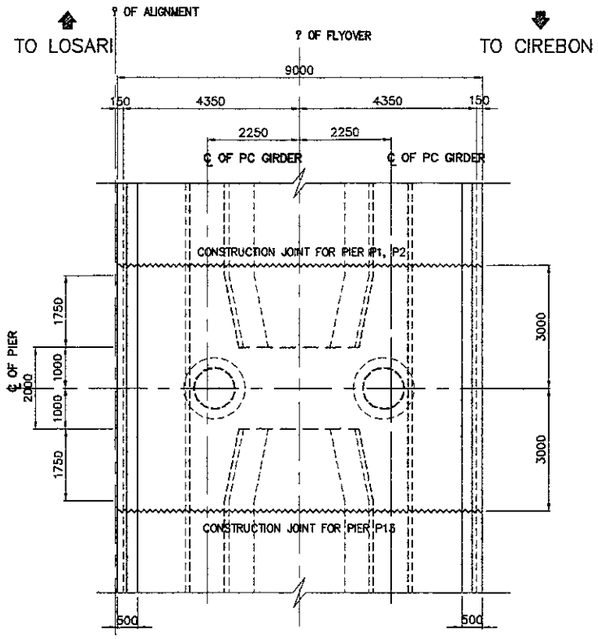

2 PLAN
SCALE : 1:150

SCHEDULE OF PIERS (FIXED)																
PIER	EL A	EL AL	EL AR	EL BL	EL BR	SL 1	SL 2	H	HL	HR	H1	H2	H3	H4	H5	H6
P1	9.757	9.722	9.632	1.560	1.560	-2.000%	+4.700%	1200	6887	6797	1158	1242	799	821	359	421
P2	10.697	10.662	10.572	1.900	1.900	-2.000%	+4.700%	1200	7487	7397	1158	1242	799	821	359	421
P3	11.603	11.568	11.478	1.900	1.900	-2.000%		1200	8393	8303	1158	1242	799	821	359	421
P13	11.342	11.307	11.217	2.380	2.380	-2.000%	-0.910%	1200	7652	7562	1158	1242	799	821	359	421
P14	10.957	10.922	10.832	2.380	2.380	-2.000%		1200	7267	7177	1158	1242	799	821	359	421
P15	10.442	10.407	10.317	2.380	2.380	-2.000%		1200	6752	6662	1158	1242	799	821	359	421

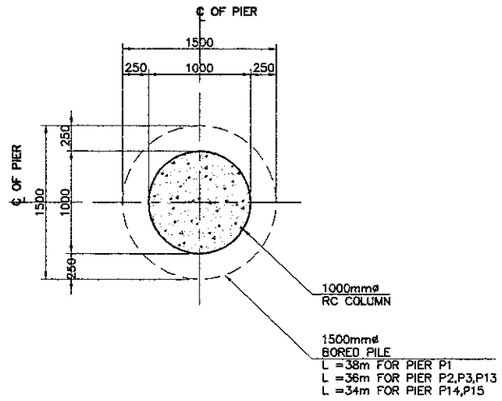

4 SECTION
SCALE : 1:60

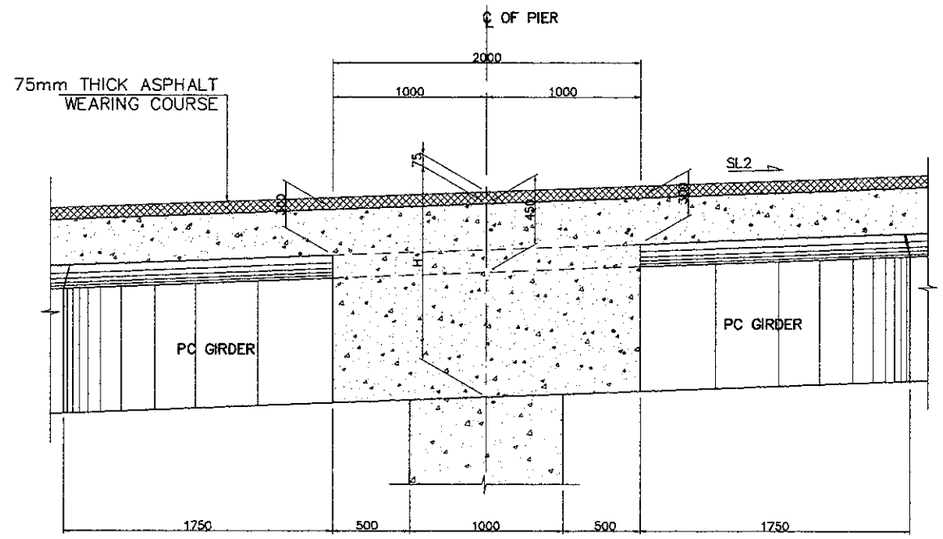

5 DETAIL
SCALE : 1:40

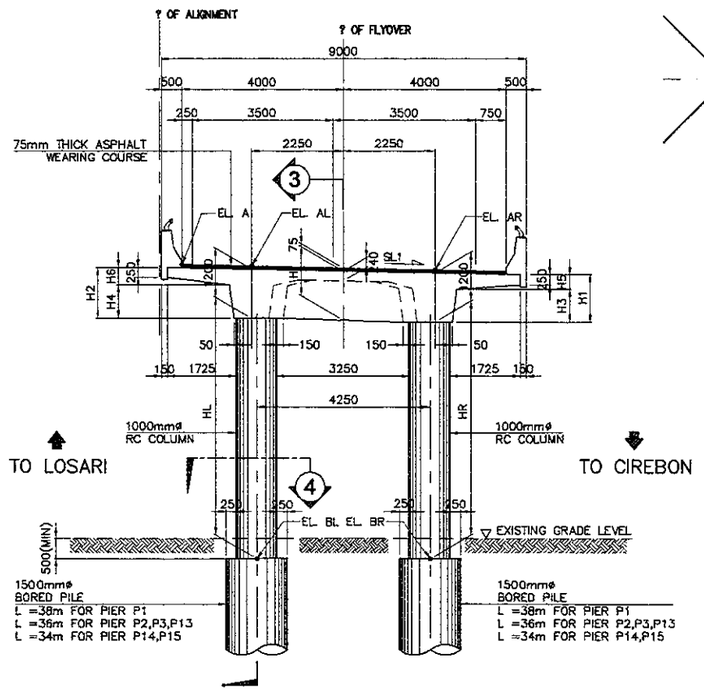

1 ELEVATION
SCALE : 1:150

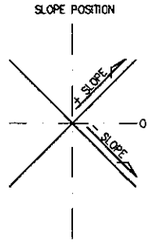

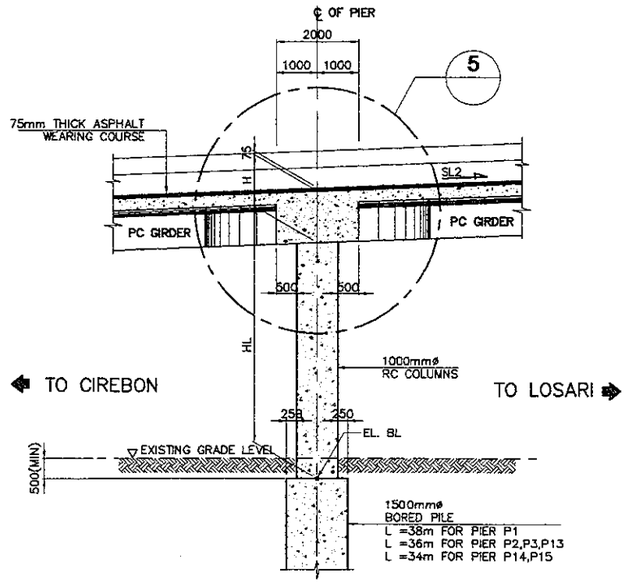

3 SECTION
SCALE : 1:150

NOTES :
1. ALL DIMENSIONS ARE IN MILLIMETER
2. ELEVATIONS ARE IN METERS

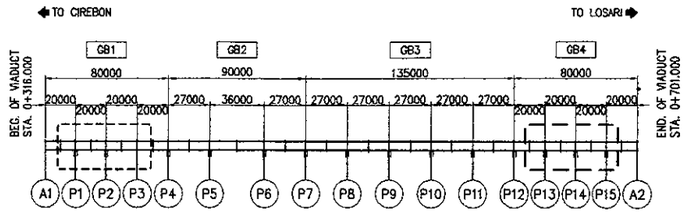

KEY PLAN
SCALE : 1:4000

JICA JAPAN INTERNATIONAL COOPERATION AGENCY / KATAHIRA & ENGINEERS INTERNATIONAL	DESIGNED BY	CHECKED BY	SUBMITTED BY	REPUBLIC OF INDONESIA MINISTRY OF PUBLIC WORKS DIRECTORATE GENERAL OF HIGHWAYS	PROJECT AND LOCATION :	SCALE :	DRAWING TITLE :	DRAWING NO :
	Name: A. GOURLEY	Name: T. OKUMURA	Name: M. KIUCHI		DETAILED DESIGN STUDY OF NORTH JAVA CORRIDOR FLYOVER PROJECT GEBANG FLYOVER - CONTRACT PACKAGE 2 (NAGREG - GEBANG) WEST JAVA PROVINCE	1 : 40 1 : 60 1 : 150 1 : 4000	PIER LAYOUT P4 (EXP.)	GSB-003
	Sign	Sign	Sign	APPROVED BY: Ir. HERRY VAZA M,Eng.Sc NIP. : 110038400 — Sign		FULL SIZE A3		SHEET NO : 03 / 57
	Date	Date	Date	Date				

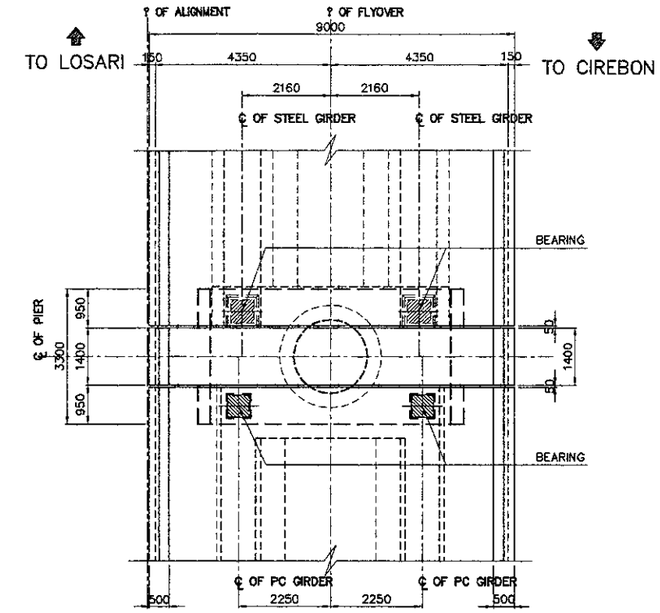

2 — PLAN
SCALE : 1:150

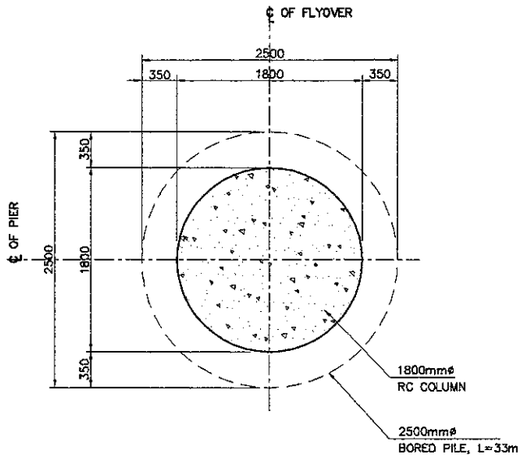

4 — SECTION
SCALE : 1:60

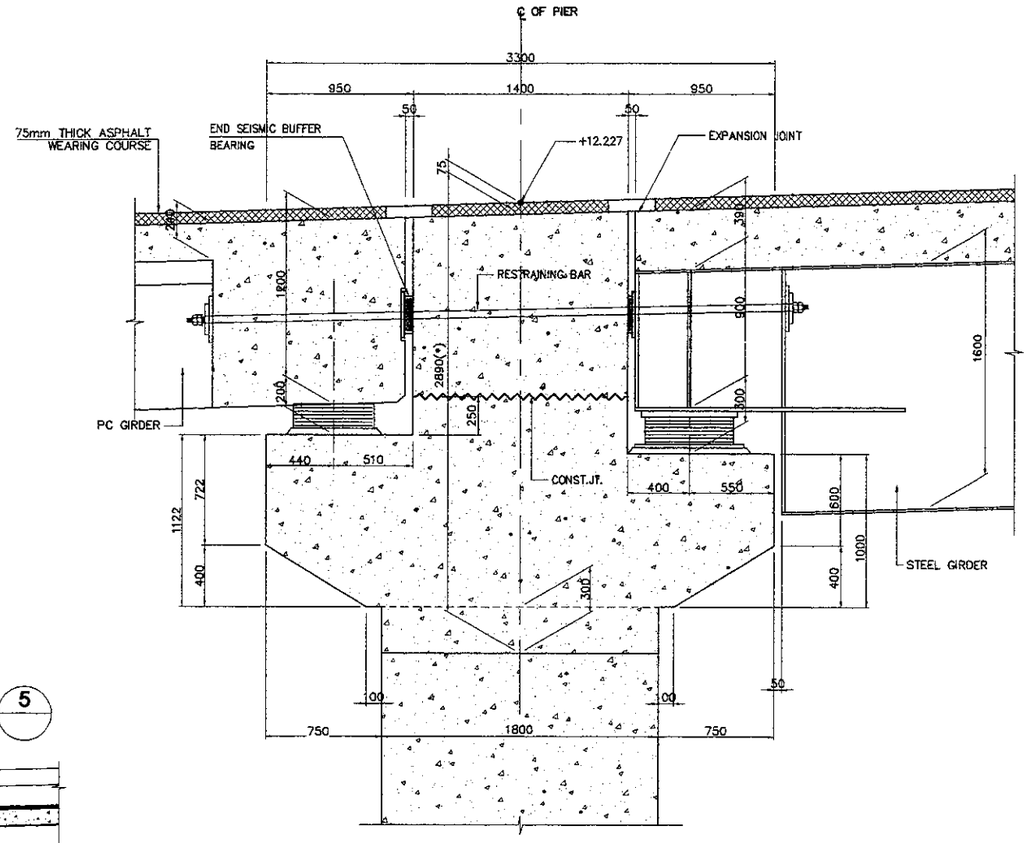

5 — DETAIL
SCALE : 1:40

(*) NOTES :
1. DIMENSION GIVEN AT ? ALIGNMENT OF FLYOVER
2. DIMENSION VARIES AT CROSS DECK

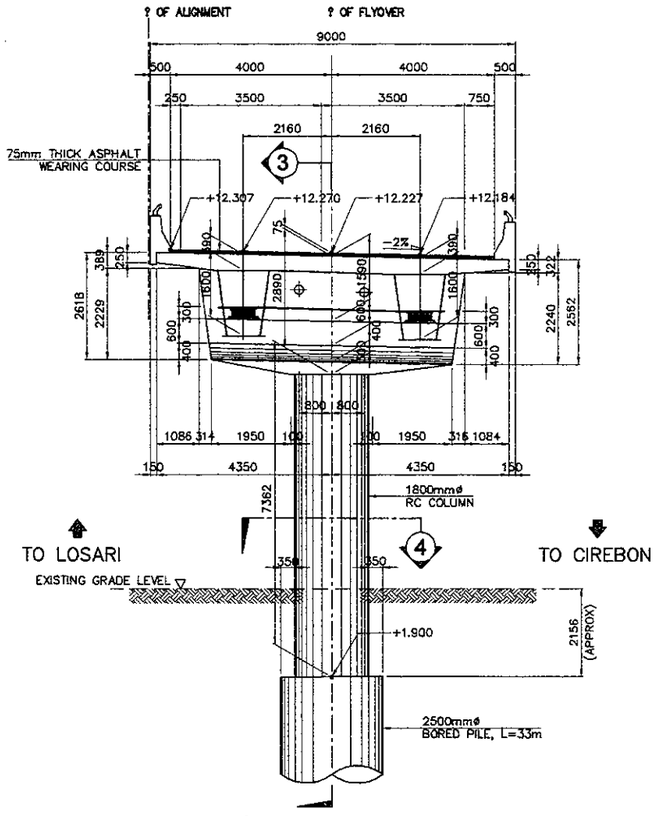

1 — ELEVATION
SCALE : 1:150

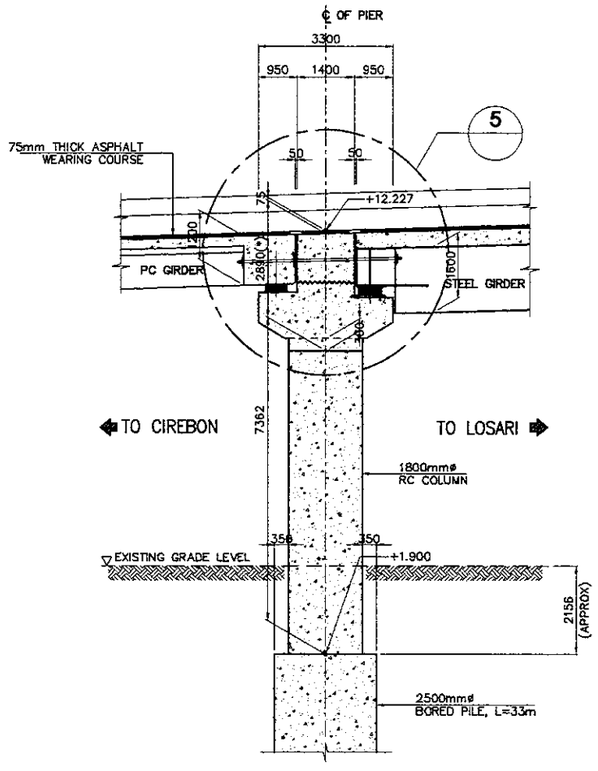

3 — SECTION
SCALE : 1:150

NOTES :
1. ALL DIMENSIONS ARE IN MILLIMETER
2. ELEVATIONS ARE IN METERS

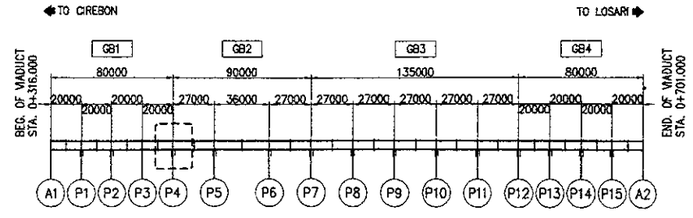

* — KEY PLAN
SCALE : 1:4000

JAPAN INTERNATIONAL COOPERATION AGENCY KATAHIRA & ENGINEERS INTERNATIONAL	DESIGNED BY	CHECKED BY	SUBMITTED BY	REPUBLIC OF INDONESIA MINISTRY OF PUBLIC WORKS DIRECTORATE GENERAL OF HIGHWAYS	PROJECT AND LOCATION :	SCALE :	DRAWING TITLE :	DRAWING NO :
	Name A. GOURLEY	Name T. OKUMURA	Name M. KIUCHI		DETAILED DESIGN STUDY OF NORTH JAVA CORRIDOR FLYOVER PROJECT GEBANG FLYOVER - CONTRACT PACKAGE 2 (NAGREG - GEBANG) WEST JAVA PROVINCE	1 : 60 1 : 150 1 : 4000	PIER LAYOUT P5 (PORTAL)	GSB-004
	Sign	Sign	Sign	APPROVED BY Ir. HERRY VAZA M.Eng.Sc NIP. : 110038400 Sign		FULL SIZE A3		SHEET NO : 04 / 57
	Date	Date	Date	Date				

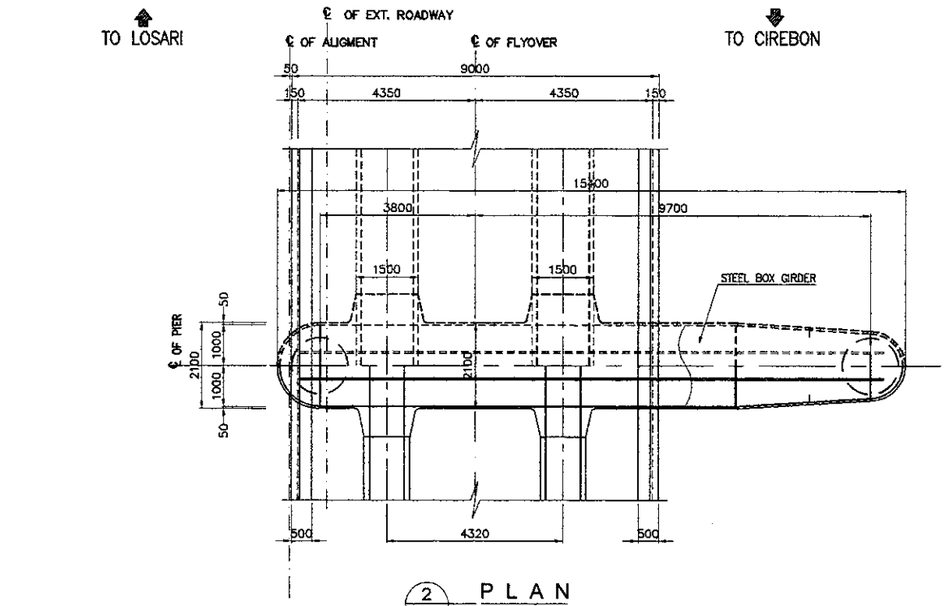

2 PLAN
SCALE : 1:150

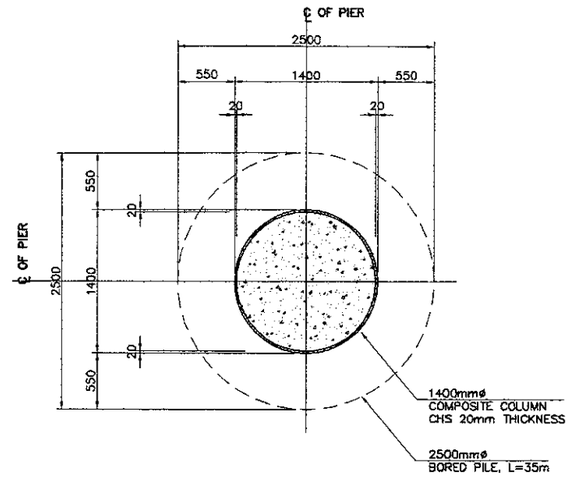

3 SECTION
SCALE : 1:60

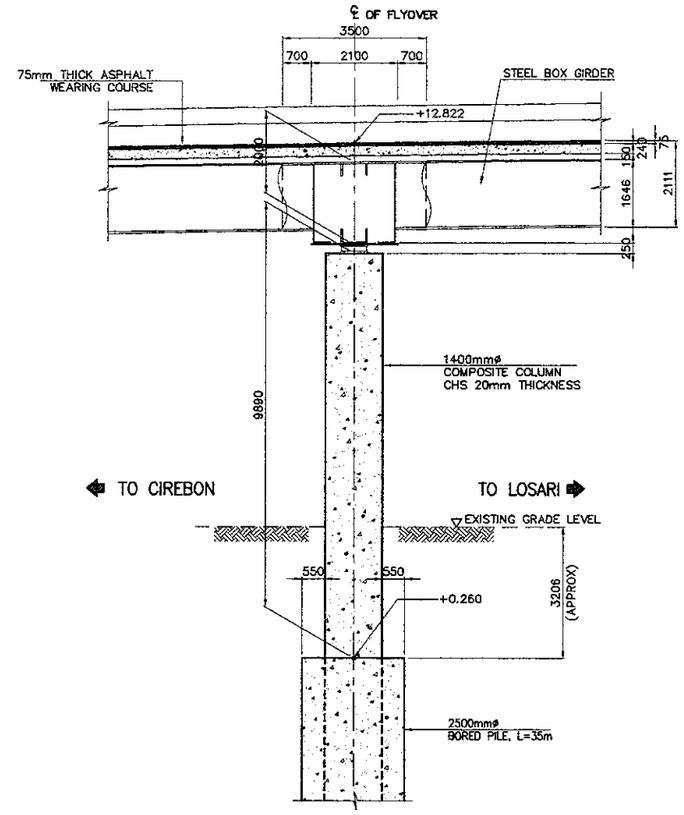

4 DETAIL
SCALE : 1:150

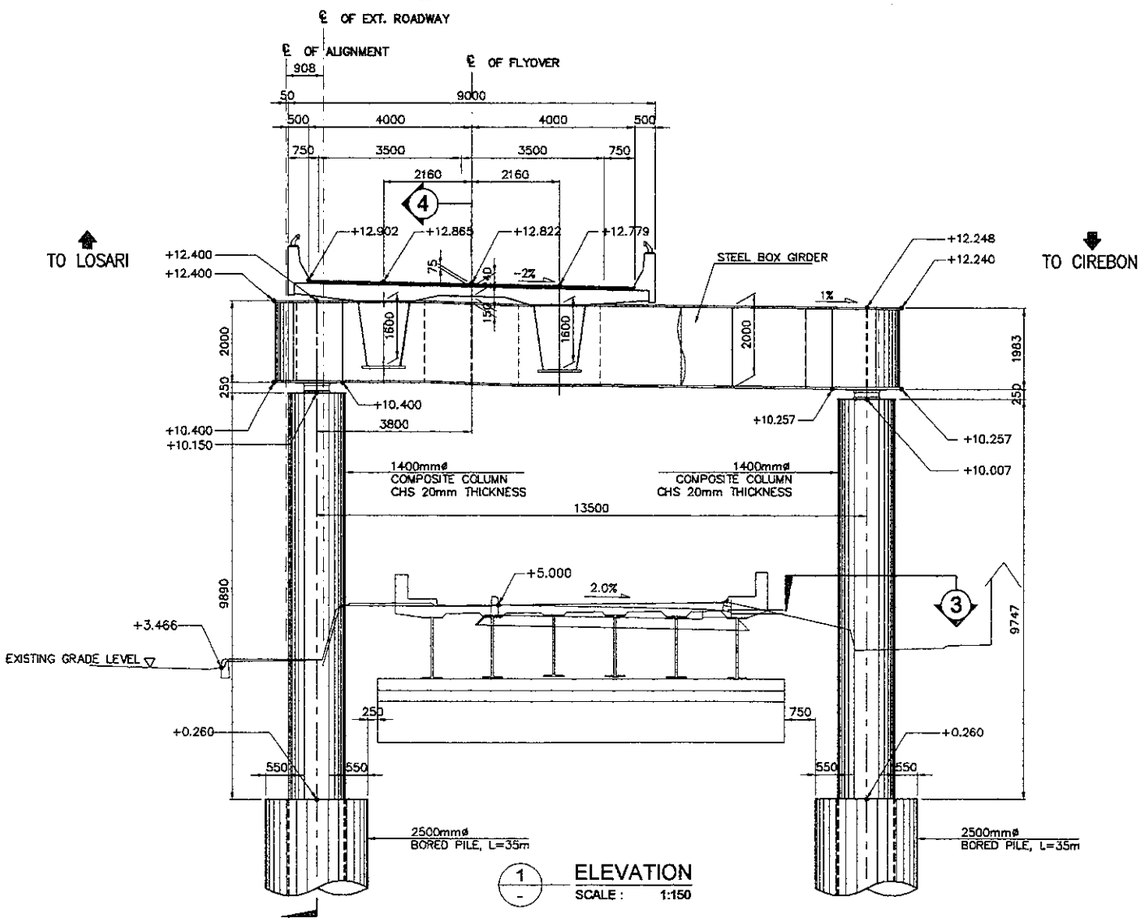

1 ELEVATION
SCALE : 1:150

NOTES :
1. ALL DIMENSIONS ARE IN MILLIMETER
2. ELEVATIONS ARE IN METERS

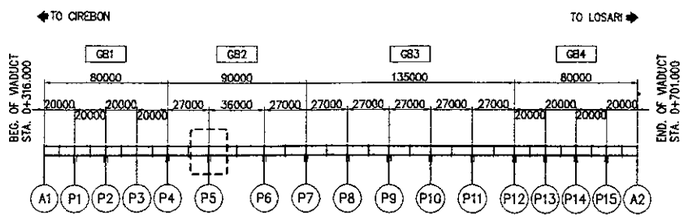

KEY PLAN
SCALE : 1:4000

JICA JAPAN INTERNATIONAL COOPERATION AGENCY	DESIGNED BY	CHECKED BY	SUBMITTED BY	REPUBLIC OF INDONESIA MINISTRY OF PUBLIC WORKS DIRECTORATE GENERAL OF HIGHWAYS	PROJECT AND LOCATION :	SCALE :	DRAWING TITLE :	DRAWING NO :
KATAHIRA & ENGINEERS INTERNATIONAL	Name: A. GOURLEY	Name: T. OKUMURA	Name: M. KIUCHI		DETAILED DESIGN STUDY OF NORTH JAVA CORRIDOR FLYOVER PROJECT GEBANG FLYOVER - CONTRACT PACKAGE 2 (NAGREG - GEBANG) WEST JAVA PROVINCE	1 : 60 1 : 150 1 : 4000	PIER LAYOUT P6 (PORTAL)	GSB-005
	Sign	Sign	Sign	APPROVED BY: Ir. HERRY VAZA M,Eng.Sc NIP. : 110038400		FULL SIZE A3		SHEET NO : 05 / 57
	Date	Date	Date	Sign / Date				

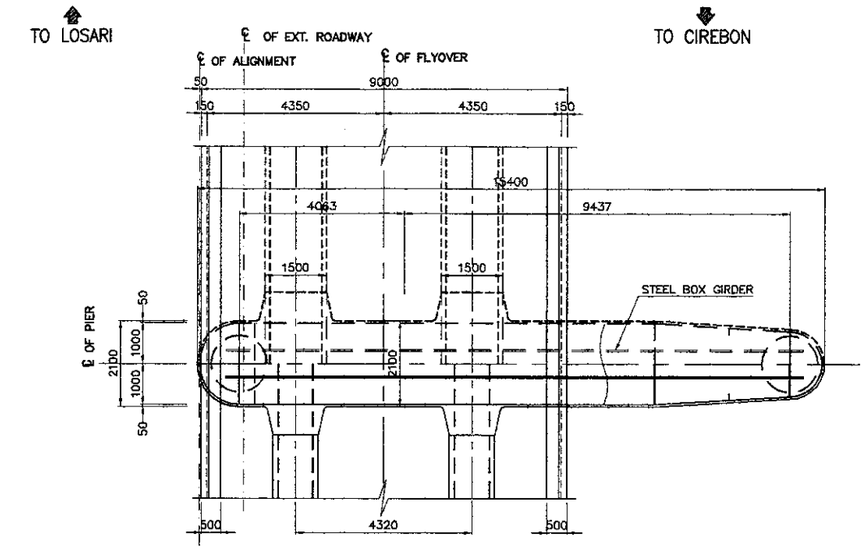

2 PLAN
SCALE : 1:150

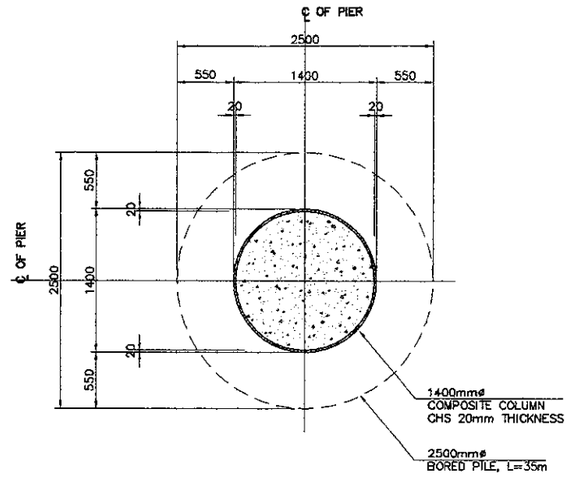

3 SECTION
SCALE : 1:60

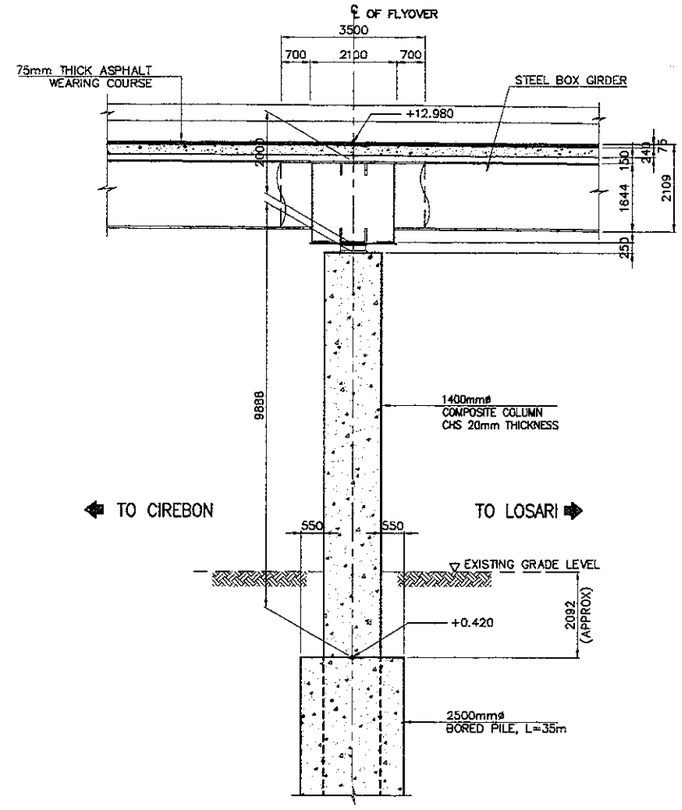

4 DETAIL
SCALE : 1:150

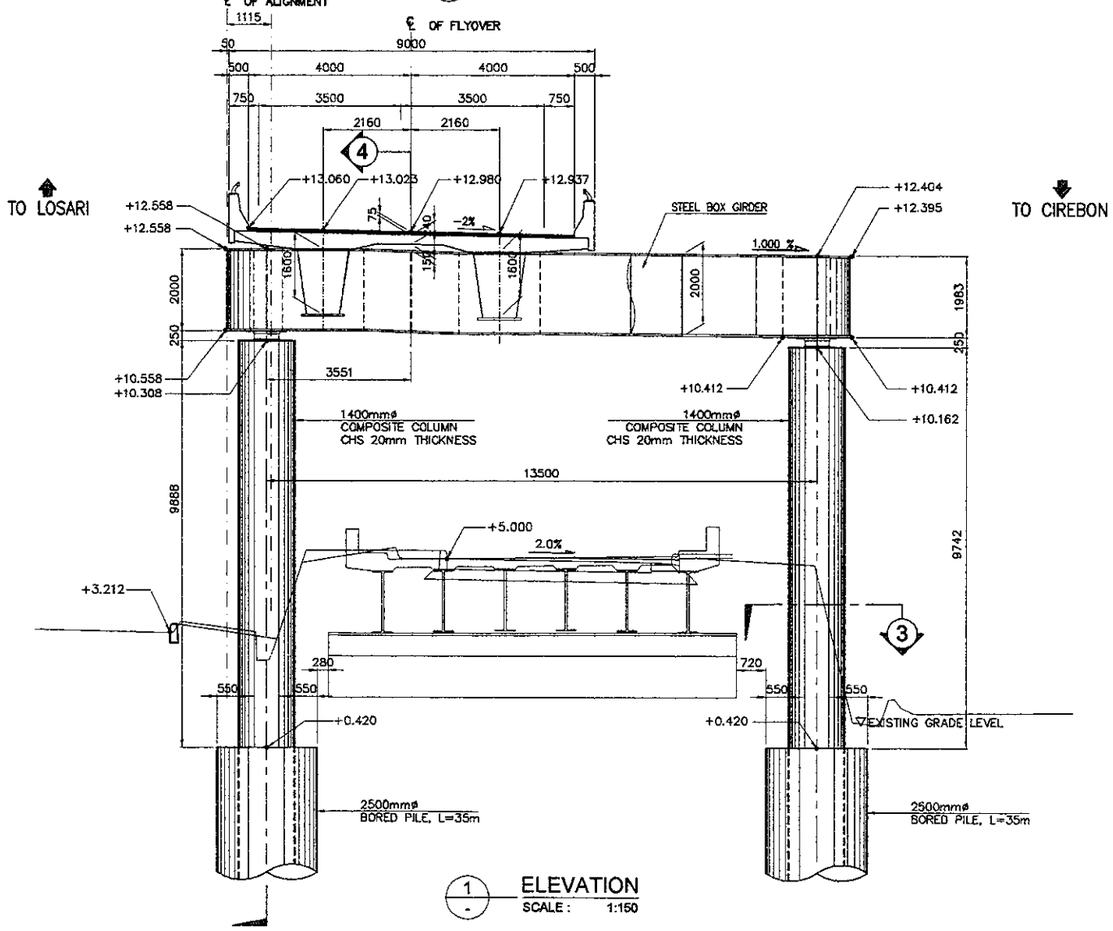

1 ELEVATION
SCALE : 1:150

NOTES :
1. ALL DIMENSIONS ARE IN MILLIMETER
2. ELEVATIONS ARE IN METERS

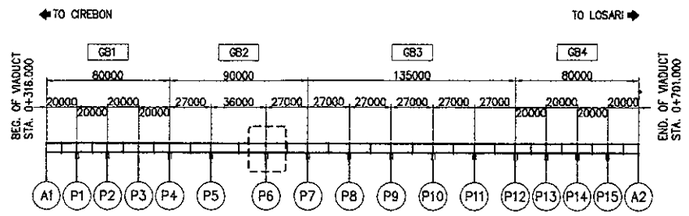

KEY PLAN
SCALE : 1:4000

JICA JAPAN INTERNATIONAL COOPERATION AGENCY	DESIGNED BY	CHECKED BY	SUBMITTED BY	REPUBLIC OF INDONESIA MINISTRY OF PUBLIC WORKS DIRECTORATE GENERAL OF HIGHWAYS	PROJECT AND LOCATION :	SCALE :	DRAWING TITLE :	DRAWING NO :
KEI KATAHIRA & ENGINEERS INTERNATIONAL	Name: A. GOURLEY	Name: T. OKUMURA	Name: M. KIUCHI	APPROVED BY: Ir. HERRY VAZA M,Eng.Sc NIP. : 110038400	DETAILED DESIGN STUDY OF NORTH JAVA CORRIDOR FLYOVER PROJECT GEBANG FLYOVER - CONTRACT PACKAGE 2 (NAGREG - GEBANG) WEST JAVA PROVINCE	1 : 40 1 : 60 1 : 150 1 : 4000 FULL SIZE A3	PIER LAYOUT P7 (EXP.)	GSB-006
	Sign	Sign	Sign	Sign				SHEET NO : 06 / 57
	Date	Date	Date	Date				

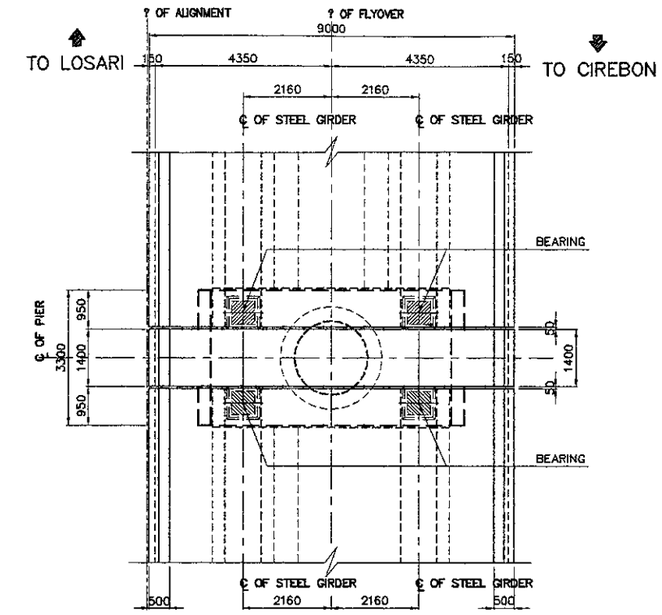

2 PLAN
SCALE : 1:150

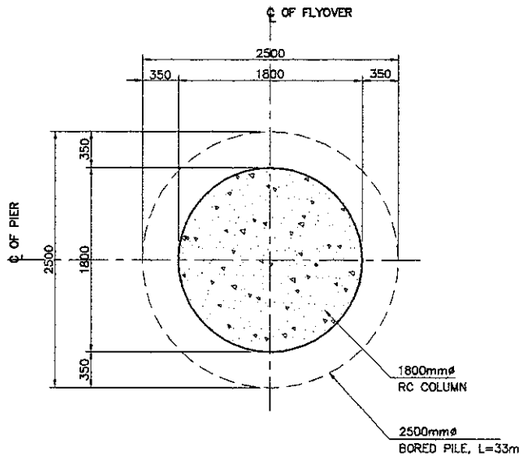

4 SECTION
SCALE : 1:60

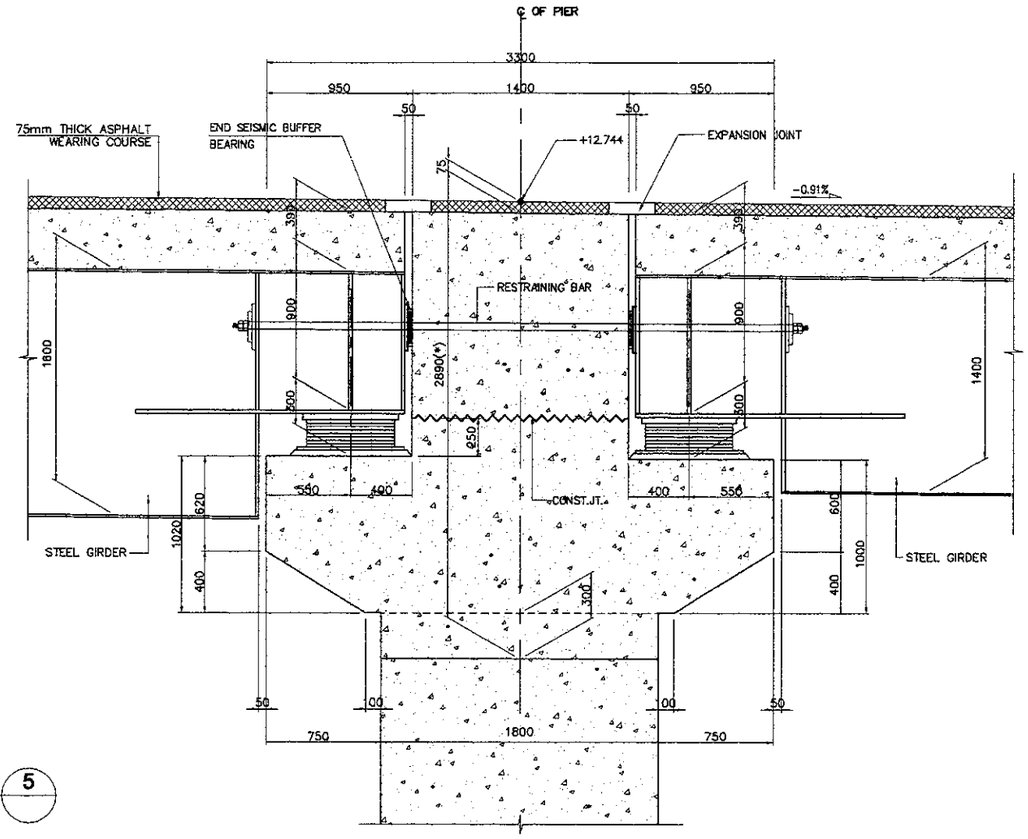

5 DETAIL
SCALE : 1:40

(*) NOTES :
1. DIMENSION GIVEN AT ? ALIGNMENT OF FLYOVER
2. DIMENSION VARIES AT CROSS DECK

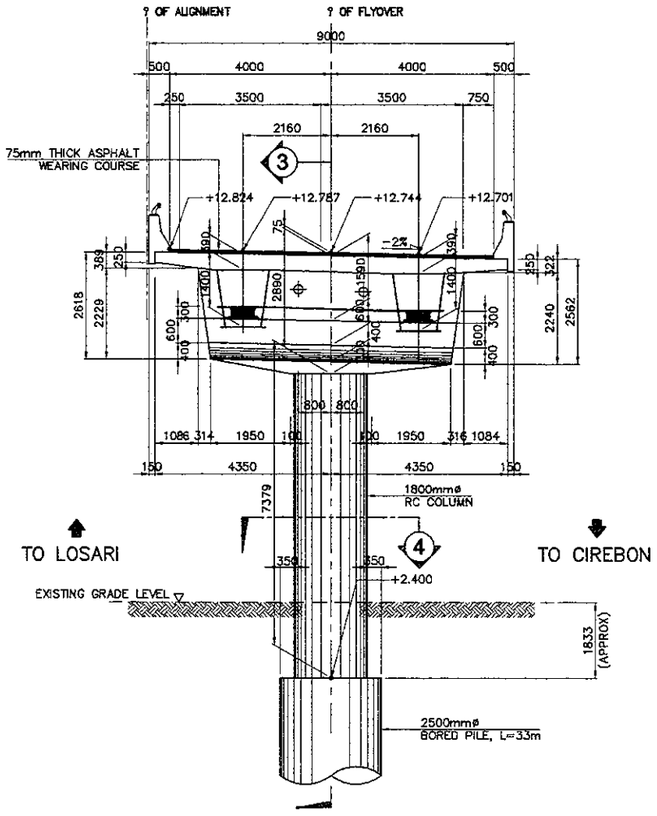

1 ELEVATION
SCALE : 1:150

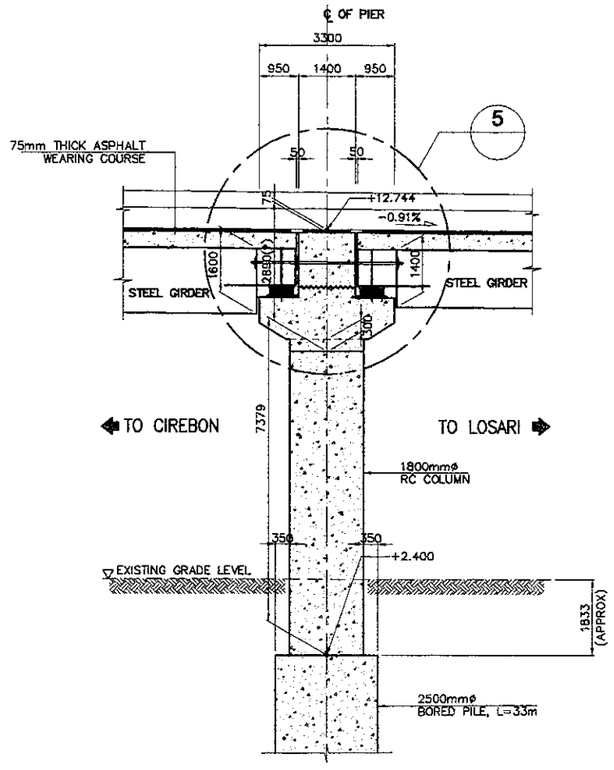

3 SECTION
SCALE : 1:150

NOTES :
1. ALL DIMENSIONS ARE IN MILLIMETER
2. ELEVATIONS ARE IN METERS

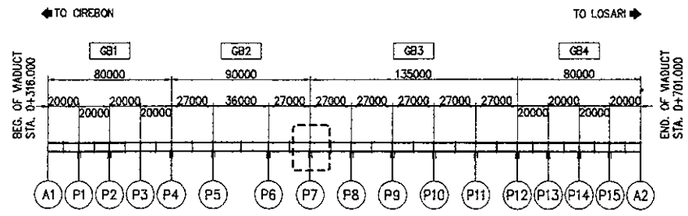

KEY PLAN
SCALE : 1:4000

JAPAN INTERNATIONAL COOPERATION AGENCY KATAHIRA & ENGINEERS INTERNATIONAL	DESIGNED BY	CHECKED BY	SUBMITTED BY	REPUBLIC OF INDONESIA MINISTRY OF PUBLIC WORKS DIRECTORATE GENERAL OF HIGHWAYS	PROJECT AND LOCATION :	SCALE :	DRAWING TITLE :	DRAWING NO :
	Name: A. GOURLEY	Name: T. OKUMURA	Name: M. KIUCHI	APPROVED BY: Ir. HERRY VAZA M.Eng.Sc NIP. : 110038400	DETAILED DESIGN STUDY OF NORTH JAVA CORRIDOR FLYOVER PROJECT GEBANG FLYOVER - CONTRACT PACKAGE 2 (NAGREG - GEBANG) WEST JAVA PROVINCE	1 : 60 1 : 150 1 : 4000 FULL SIZE A3	PIER LAYOUT P8,P9,P10,P11 (FIXED)	GSB-007
	Sign	Sign	Sign	Sign				SHEET NO :
	Date	Date	Date	Date				07 / 57

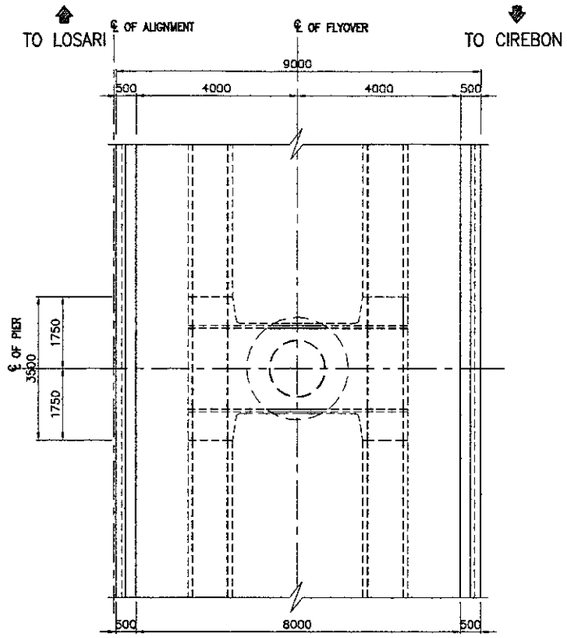

2 PLAN
SCALE : 1:150

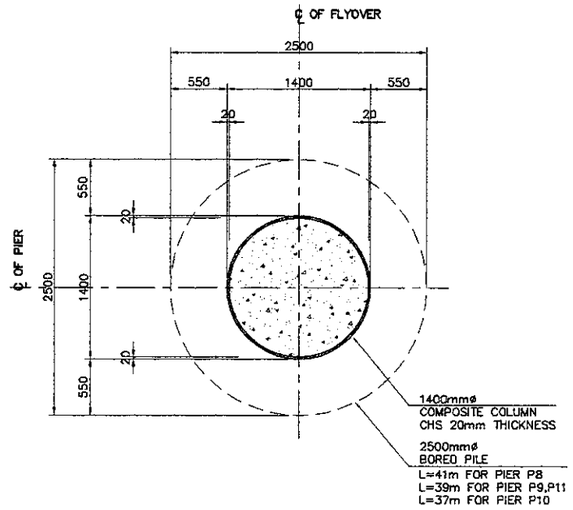

4 SECTION
SCALE : 1:60

SCHEDULE OF PIERS (FIXED)													
PIER	EL A	EL AL	EL AR	EL B	SL 1	SL 2	H	H1	H2	H3	H4	H5	H6
P8	12.578	12.541	12.455	2.400	-2.000%	-0.910%	7733	1778	1866	1432	1432	346	434
P9	12.333	12.296	12.210	2.400	-2.000%	-0.910%	7488	1772	1860	1426	1426	346	434
P10	12.087	12.050	11.964	2.200	-2.000%	-0.910%	7442	1772	1860	1426	1426	346	434
P11	11.841	11.804	11.718	2.000	-2.000%	-0.910%	7396	1778	1866	1432	1432	346	434

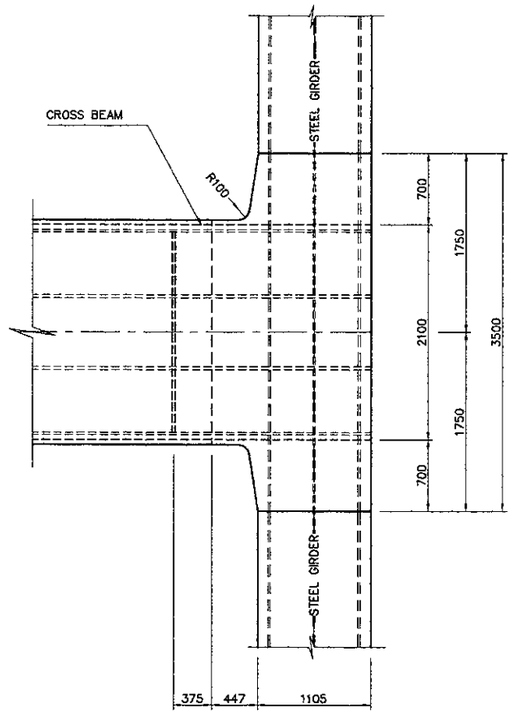

5 DETAIL
SCALE : 1:40

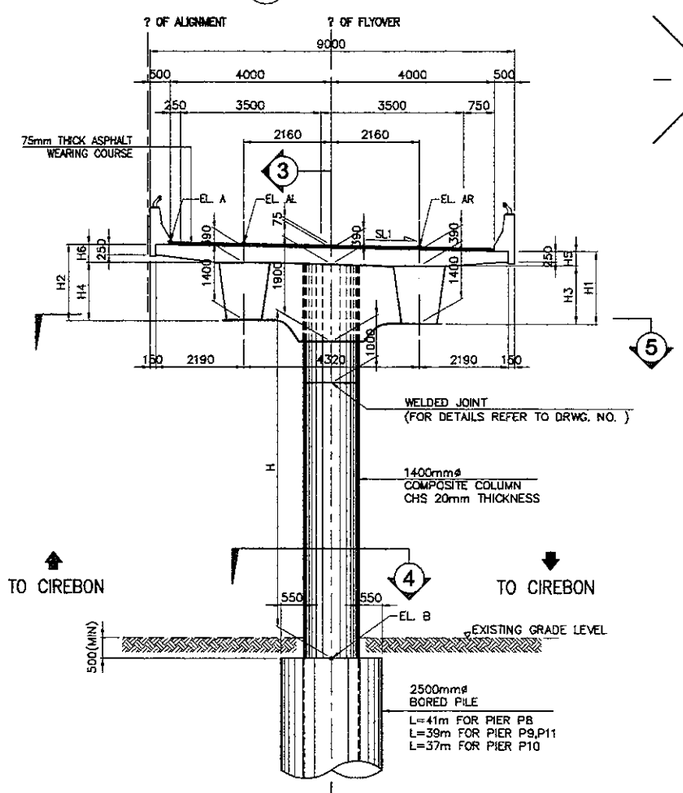

1 ELEVATION
SCALE : 1:150

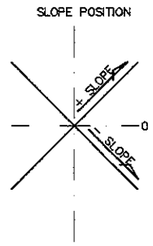

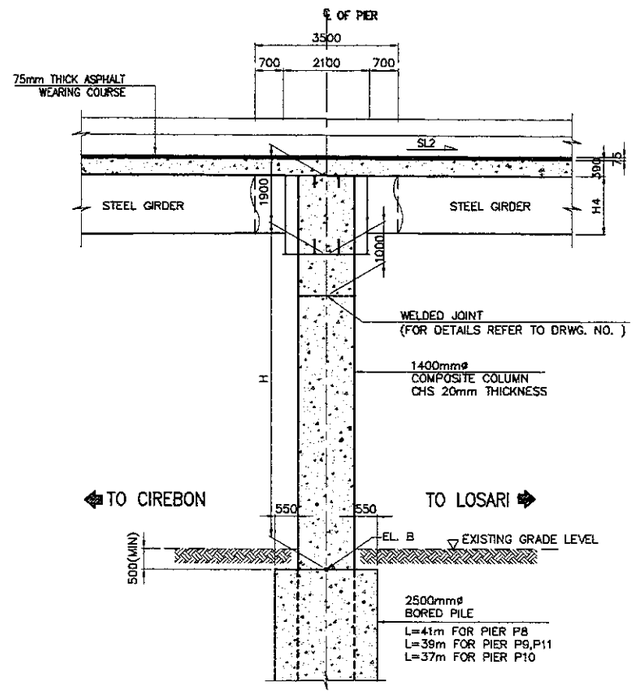

3 SECTION
SCALE : 1:150

NOTES :
1. ALL DIMENSIONS ARE IN MILLIMETER
2. ELEVATIONS ARE IN METERS

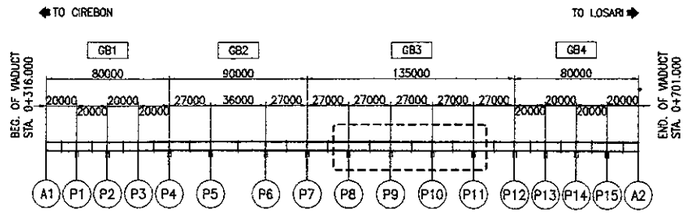

* KEY PLAN
SCALE : 1:4000

JICA JAPAN INTERNATIONAL COOPERATION AGENCY	DESIGNED BY	CHECKED BY	SUBMITTED BY	REPUBLIC OF INDONESIA MINISTRY OF PUBLIC WORKS DIRECTORATE GENERAL OF HIGHWAYS	PROJECT AND LOCATION :	SCALE :	DRAWING TITLE :	DRAWING NO :
KATAHIRA & ENGINEERS INTERNATIONAL	Name: A. GOURLEY Sign: Date:	Name: T. OKUMURA Sign: Date:	Name: M. KIUCHI Sign: Date:	APPROVED BY: Ir. HERRY VAZA M,Eng.Sc NIP. : 110038400 Sign: Date:	DETAILED DESIGN STUDY OF NORTH JAVA CORRIDOR FLYOVER PROJECT GEBANG FLYOVER - CONTRACT PACKAGE 2 (NAGREG - GEBANG) WEST JAVA PROVINCE	1 : 40 1 : 60 1 : 150 1 : 4000 FULL SIZE A3	PIER LAYOUT P12 (EXP.)	GSB-008 SHEET NO : 08 / 57

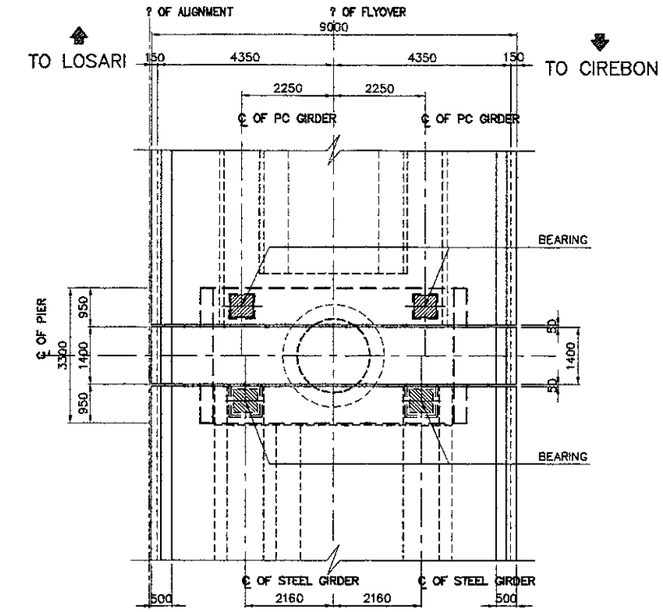

2 PLAN
SCALE : 1:150

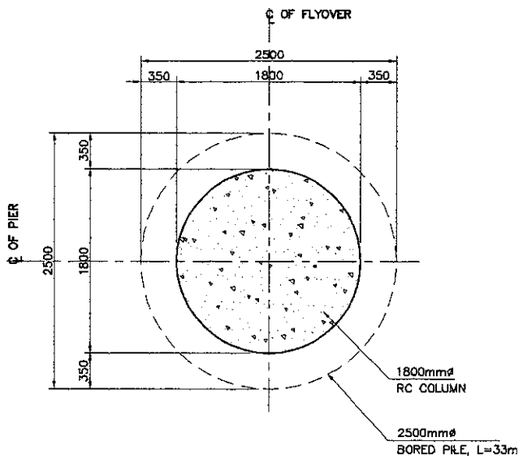

4 SECTION
SCALE : 1:60

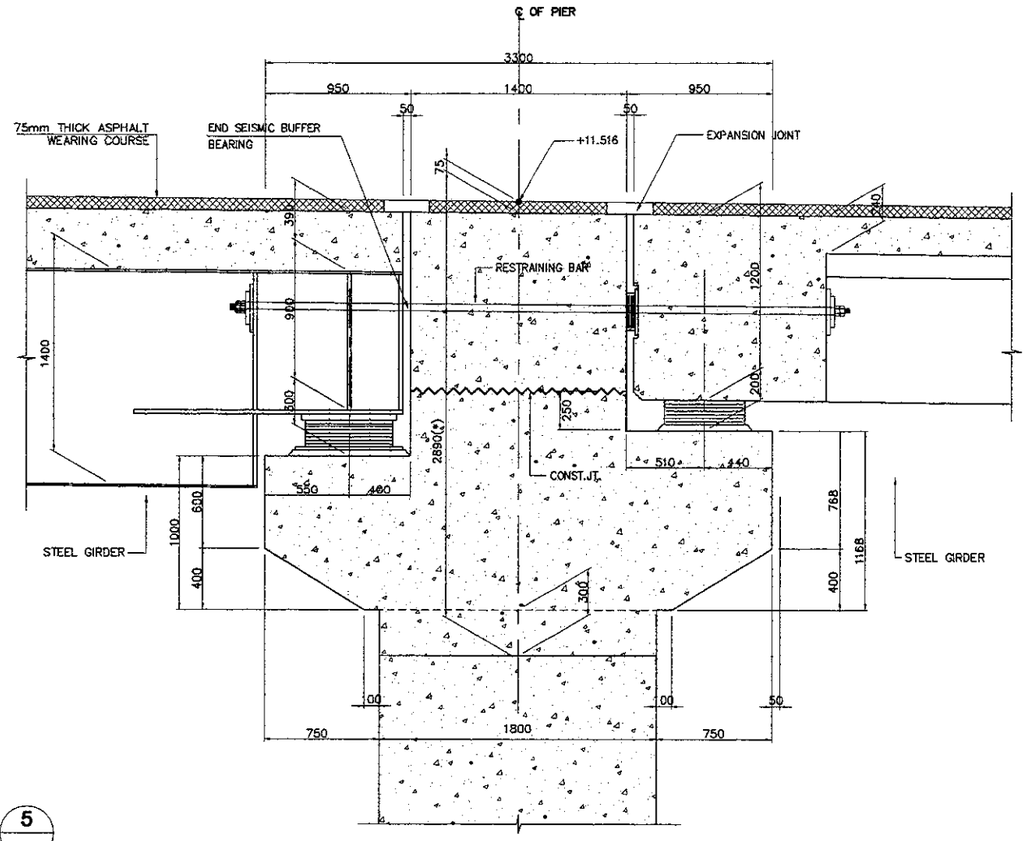

5 DETAIL
SCALE : 1:40

(*) NOTES :
1. DIMENSION GIVEN AT ? ALIGNMENT OF FLYOVER
2. DIMENSION VARIES AT CROSS DECK

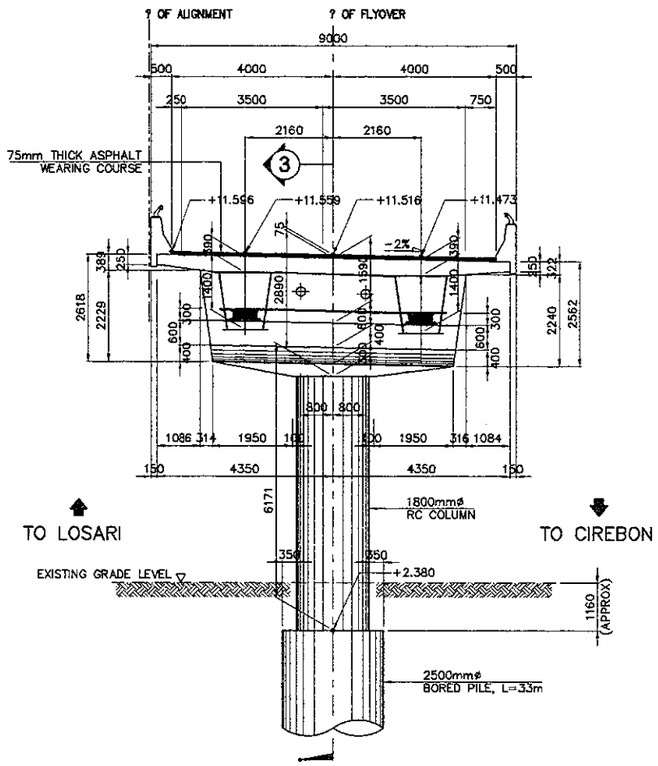

1 ELEVATION
SCALE : 1:150

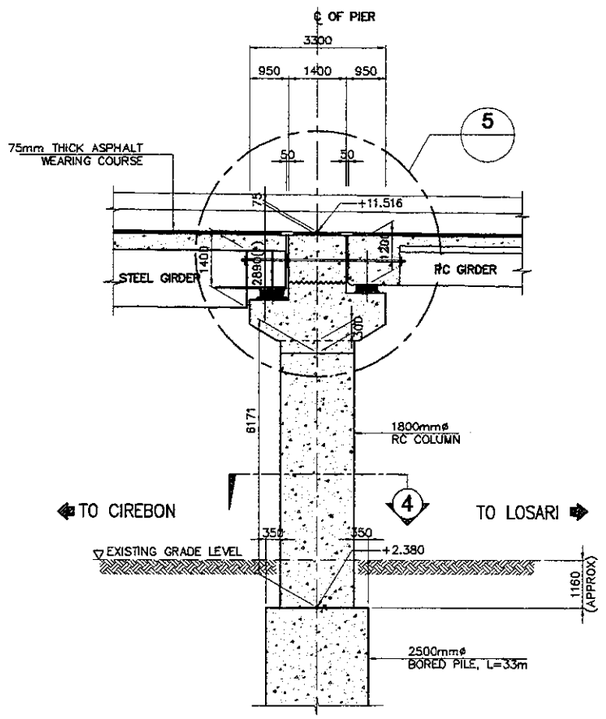

3 SECTION
SCALE : 1:150

NOTES :
1. ALL DIMENSIONS ARE IN MILLIMETER
2. ELEVATIONS ARE IN METERS

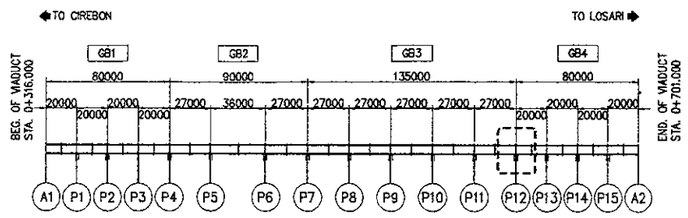

* KEY PLAN
SCALE : 1:4000

JAPAN INTERNATIONAL COOPERATION AGENCY KATAHIRA & ENGINEERS INTERNATIONAL	DESIGNED BY	CHECKED BY	SUBMITTED BY	REPUBLIC OF INDONESIA MINISTRY OF PUBLIC WORKS DIRECTORATE GENERAL OF HIGHWAYS	PROJECT AND LOCATION :	SCALE :	DRAWING TITLE :	DRAWING NO :
	Name A. GOURLEY	Name T. OKUMURA	Name M. KIUCHI		DETAILED DESIGN STUDY OF NORTH JAVA CORRIDOR FLYOVER PROJECT GEBANG FLYOVER - CONTRACT PACKAGE 2 (NAGREG - GEBANG) WEST JAVA PROVINCE	1 : 4000 1 : 100 1 : 40	ABUTMENT LAYOUT & DIMENSIONS (ABUT. A2)	GSB-009
	Sign	Sign	Sign	APPROVED BY Ir. HERRY VAZA M,Eng.Sc Sign				SHEET NO :
	Date	Date	Date	NIP. : 110038400 Date		FULL SIZE A3		09 / 57

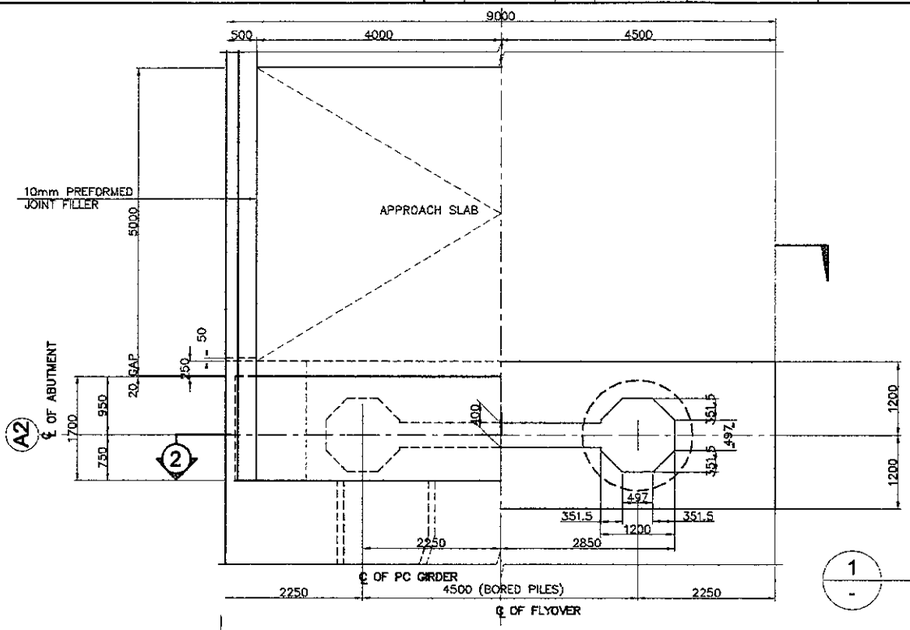

1 PLAN
SCALE 1:100

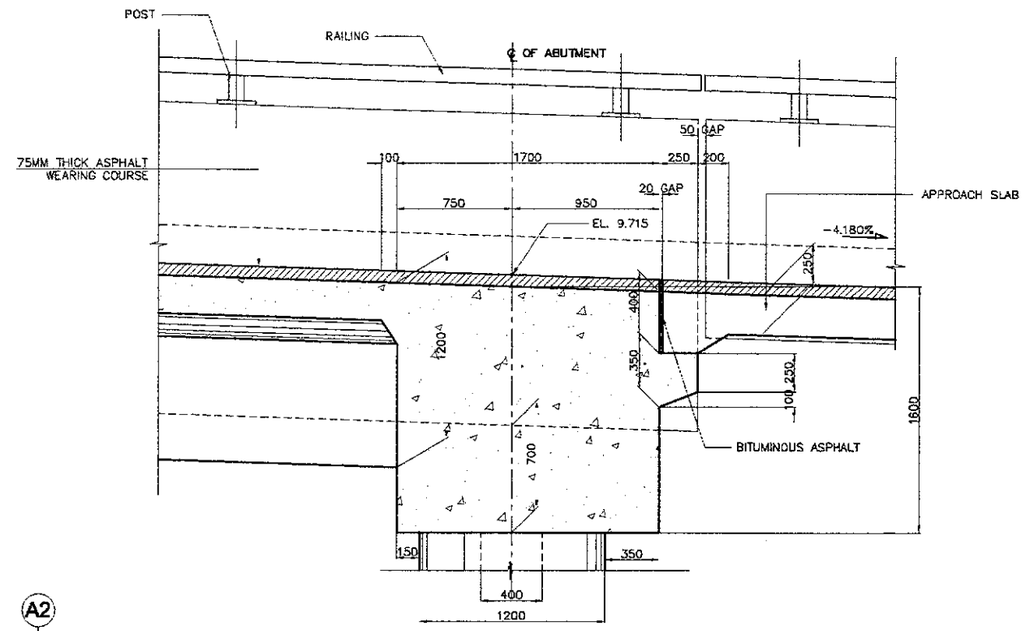

4 DETAIL
SCALE 1:40

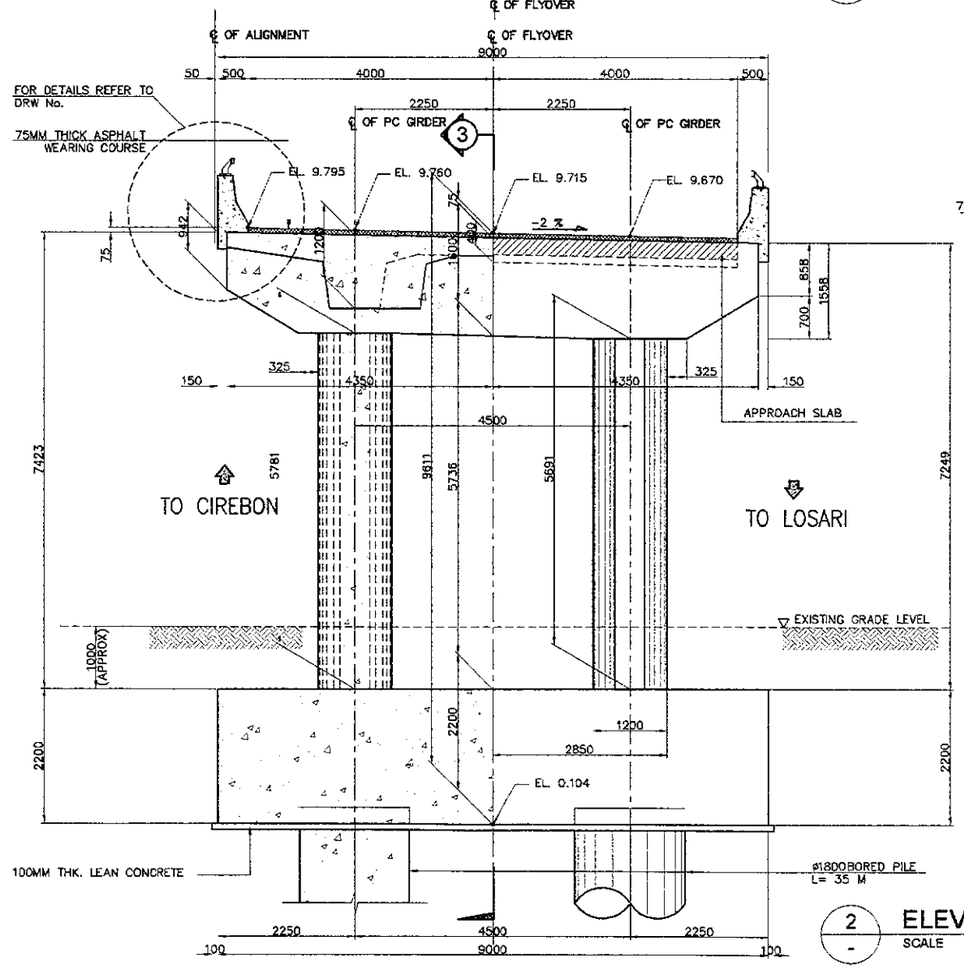

2 ELEVATION
SCALE 1:100

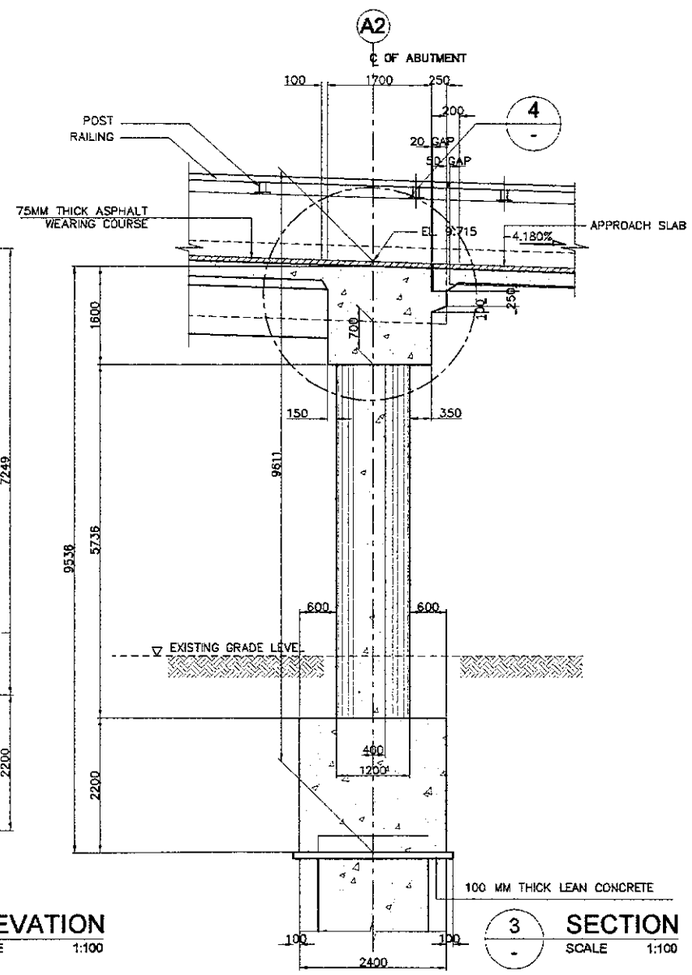

3 SECTION
SCALE 1:100

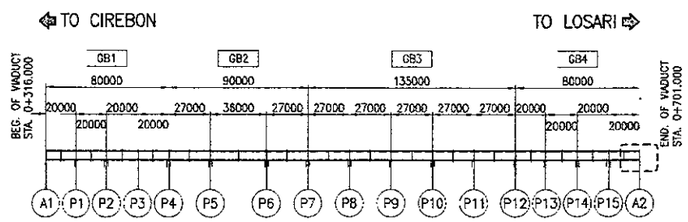

KEY PLAN
SCALE 1:4000

PRINTED: OCT. 25, 2006

JICA JAPAN INTERNATIONAL COOPERATION AGENCY / KEI KATAHIRA & ENGINEERS INTERNATIONAL	DESIGNED BY	CHECKED BY	SUBMITTED BY	REPUBLIC OF INDONESIA MINISTRY OF PUBLIC WORKS DIRECTORATE GENERAL OF HIGHWAYS	PROJECT AND LOCATION :	SCALE :	DRAWING TITLE :	DRAWING NO :
	Name: A. GOURLEY	Name: T. OKUMURA	Name: M. KIUCHI		DETAILED DESIGN STUDY OF NORTH JAVA CORRIDOR FLYOVER PROJECT GEBANG FLYOVER - CONTRACT PACKAGE 2 (NAGREG - GEBANG) WEST JAVA PROVINCE	1 : 100 1 : 40	REINFORCEMENT COLUMN OF ABUTMENT A1 (1 OF 2)	GSB-010
	Sign	Sign	Sign	APPROVED BY: Ir. HERRY VAZA M,Eng.Sc				SHEET NO :
	Date	Date	Date	NIP. : 110038400 / Sign / Date		FULL SIZE A3		10 / 57

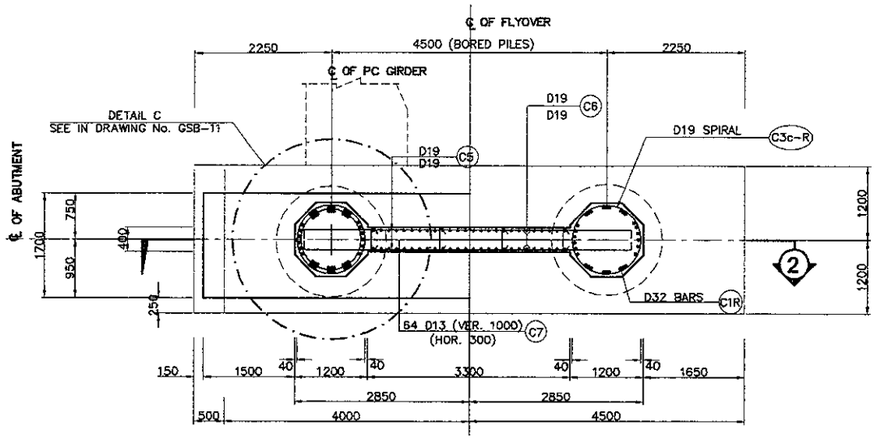

1 - PLAN
SCALE 1:100

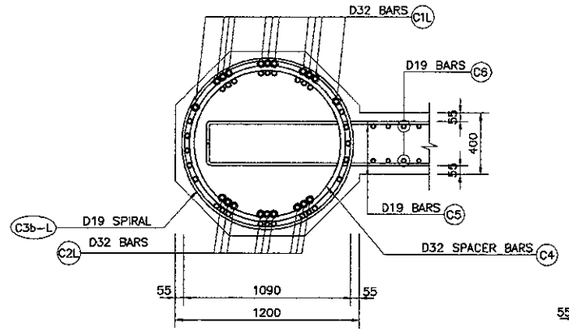

4 - SECTION
SCALE 1:40

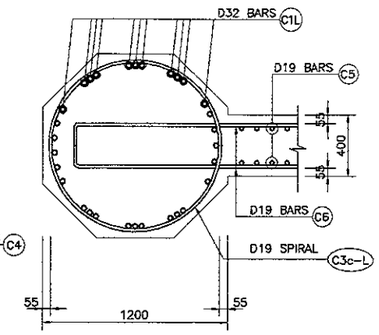

5 - SECTION
SCALE 1:40

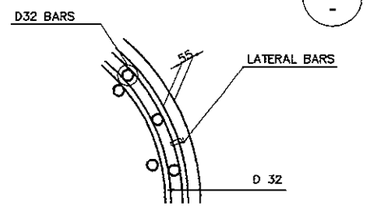

B - TYPICAL BAR LAYOUT DETAIL
NOT TO SCALE

NOTES :

1. ALL DIMENSIONS ARE IN MILLIMETERS
2. ELEVATION ARE IN METERS
3. CONCRETE ABUTMENT AND FOOTING fc' = 30 MPa
4. REINFORCING STEEL : YIELD STRENGTH = 390 N/mm2

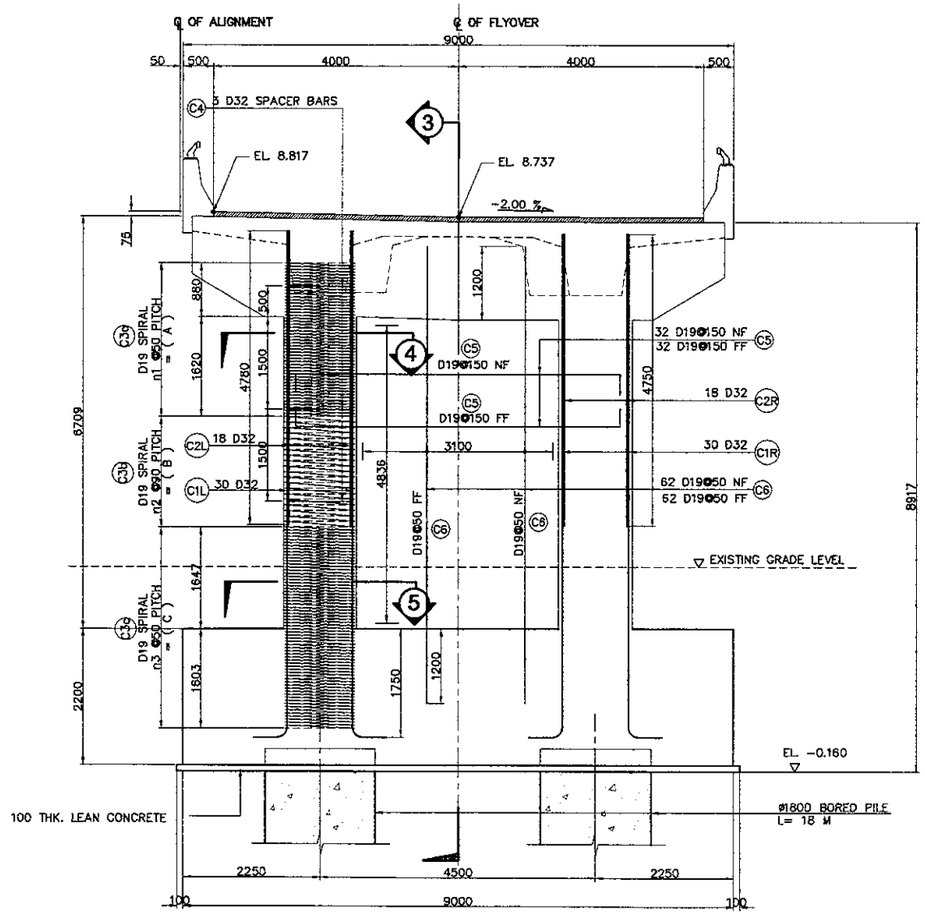

2 - ELEVATION
SCALE 1:100

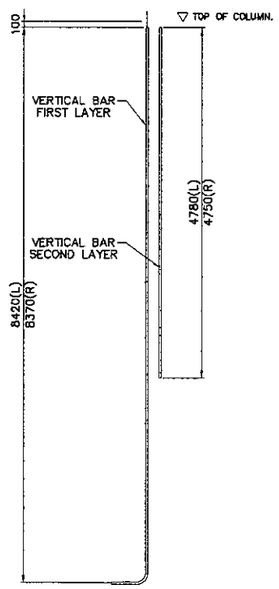

A - SCHEMATIC DETAIL
NOT TO SCALE

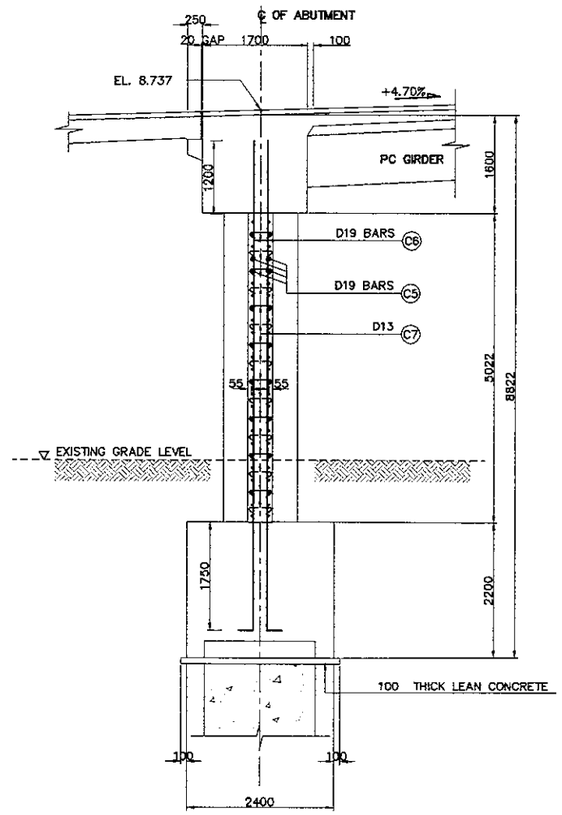

3 - SECTION
SCALE 1:100

PRINTED: OCT. 18, 2006

JAPAN INTERNATIONAL COOPERATION AGENCY KATAHIRA & ENGINEERS INTERNATIONAL	DESIGNED BY	CHECKED BY	SUBMITTED BY	REPUBLIC OF INDONESIA MINISTRY OF PUBLIC WORKS DIRECTORATE GENERAL OF HIGHWAYS	PROJECT AND LOCATION :	SCALE :	DRAWING TITLE :	DRAWING NO :
	Name A. GOURLEY	Name T. OKUMURA	Name M. KIUCHI		DETAILED DESIGN STUDY OF NORTH JAVA CORRIDOR FLYOVER PROJECT GEBANG FLYOVER - CONTRACT PACKAGE 2 (NAGREG - GEBANG) WEST JAVA PROVINCE	1 : 20	REINFORCEMENT COLUMN OF ABUTMENT A1 (2 OF 2)	GSB-011
	Sign	Sign	Sign	APPROVED BY Ir. HERRY VAZA M,Eng.Sc				SHEET NO :
	Date	Date	Date	NIP. : 110038400 Date		FULL SIZE A3		11 / 57

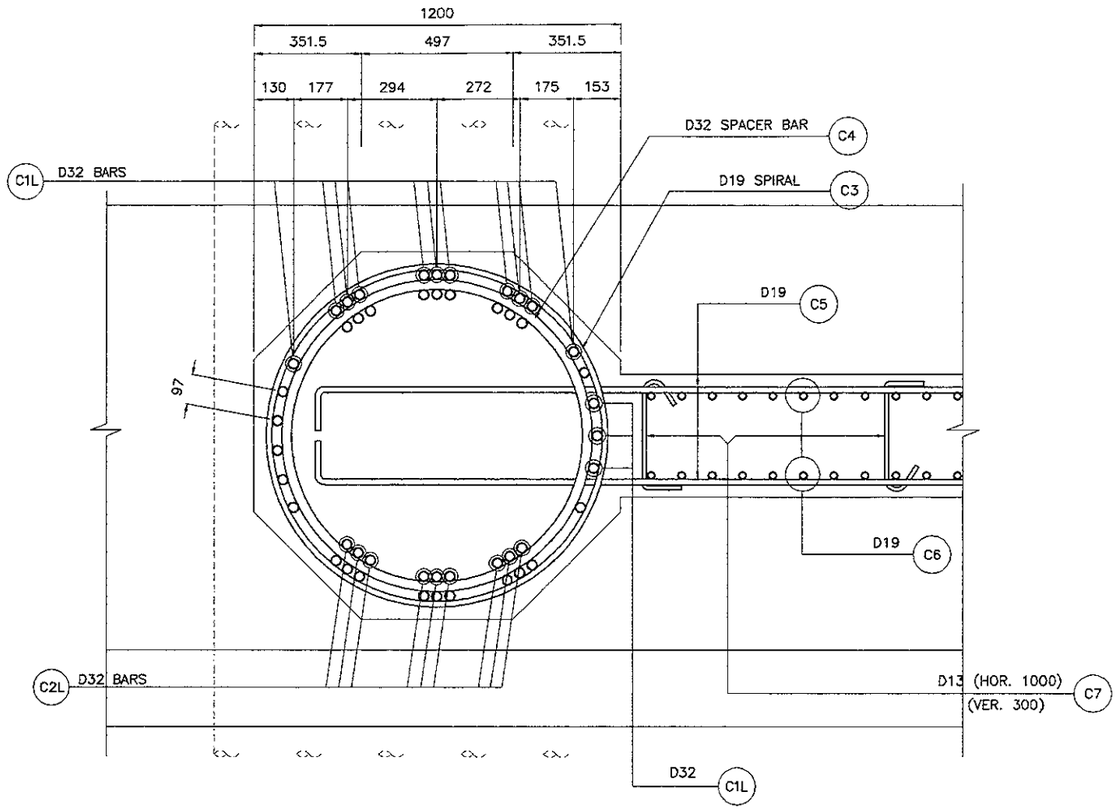

C / 1 10 **DETAIL**
SCALE 1:20

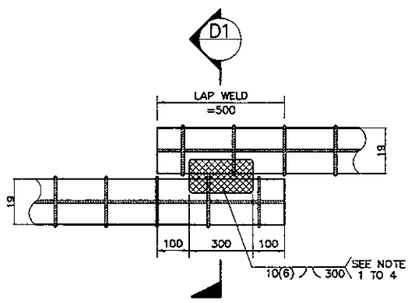

DIRECT LAP JOINT WITH BARS IN CONTACT

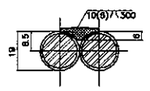

D1 / . **DETAIL**
NOT TO SCALE

NOTES ON LAP-WELD CONNECTION :

1. SPIRAL REINFORCEMENT ARE LAP-WELD CONNECTED (FLARED-V-GROOVE TYPE)
2. WELDING SHOULD CONFORM TO AWS (D1.4) *STRUCTURAL WELDING CODE REINFORCED STEEL.*
3. USE ELECTRODE E90XX.
4. CARE SHOULD BE TAKEN NOT TO DAMAGE THE COLUMN MAIN BARS DURING WELDING.

D / . **DETAIL OF SPIRAL REINF. FULL LAP-WELD CONNECTION**
NOT TO SCALE

NOTES :

1. ALL DIMENSIONS ARE IN MILLIMETERS
2. ELEVATION ARE IN METERS
3. CONCRETE ABUTMENT AND FOOTING fc' = 30 MPa
4. REINFORCING STEEL : YIELD STRENGTH = 390 N/mm2

BAR BENDING DIAGRAM

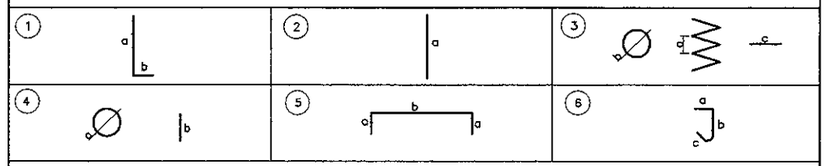

SCHEDULE OF REINFORCEMENT

LOCATION	BAR MARK	SIZE (mm)	BEND TYPE	DIMENSION (mm) OUT TO OUT a	b	c	d	e	f	LENGTH (mm)	NO. REQ'D.	UNIT WEIGHT (kg/m.)	WEIGHT (kg.)	VOLUME OF CONC. (M³)
ABUTMENT (A1)	COLUMN													
	C1L	32	1	8420	550					8420	30	6.31	1698	6.670
	C2L	32	2	4780						4780	18	6.31	543	
	C3a-L	19	3	50	1090	500				181918	1	2.23	409	
	C3b-L	19	3	90	1090	500				71340	1	2.23	159	
	C3c-L	19	3	50	1090	500				203320	1	2.23	453	
	C4	32	4	988	500					3604	3	6.31	68	
										TOTAL WEIGHT CULOMN (L) = 3,223 kg.				
	C1R	32	1	8370	550					8370	30	6.31	1689	5.500
	C2R	32	2	4720						4720	18	6.31	536	
	C3a-R	19	3	50	1090	500				181918	1	2.23	406	
	C3b-R	19	3	90	1090	500				67773	1	2.23	151	
	C3c-R	19	3	50	1090	500				263320	1	2.23	453	
	C5	32	4	988	500					3604	3	6.31	68	
										TOTAL WEIGHT COLUMN (R) = 3,198 kg.				
										TOTAL (A) WEIGHT ABUTMENT A2 (L + R) = 6,421 kg.				12.170
	WALL													
	C5	19	5	300	5300					5600	64	2.23	799	6.690
	C6	19	1	7420	500					7920	124	2.23	2190	
	C7	13	6	110	320	160				590	66	1.04	40	
										TOTAL (B) WALL = 3,029 kg.				
										TOTAL WEIGHT (A + B) = 9,450 kg.				18.860

THE REINFORCEMENT SHOWN ON THIS TABLE IS FOR REFERENCE ONLY, THE CONTRACTOR SHOULD CHECKED AND VERIFY ALL DIMENSIONS, SIZES AND QUANTITIES OF REINFORCEMENT.

SCHEDULE OF COLUMN

No. OF COLUMN	A (mm)	B (mm)	C (mm)	V (mm)	n1	n2	n3
A1 (L)	2500	1800	3250	1647	50	20	65
A1 (R)	2500	1710	3250	1647	50	19	65

JAPAN INTERNATIONAL COOPERATION AGENCY KATAHIRA & ENGINEERS INTERNATIONAL	DESIGNED BY	CHECKED BY	SUBMITTED BY	REPUBLIC OF INDONESIA MINISTRY OF PUBLIC WORKS DIRECTORATE GENERAL OF HIGHWAYS	PROJECT AND LOCATION :	SCALE :	DRAWING TITLE :	DRAWING NO :
	Name: A. GOURLEY	Name: T. OKUMURA	Name: M. KIUCHI		DETAILED DESIGN STUDY OF NORTH JAVA CORRIDOR FLYOVER PROJECT GEBANG FLYOVER - CONTRACT PACKAGE 2 (NAGREG - GEBANG) WEST JAVA PROVINCE	1 : 100 1 : 40	REINFORCEMENT COLUMN OF ABUTMENT A2 (1 OF 2)	GSB-012
	Sign	Sign	Sign	APPROVED BY: Ir. HERRY VAZA M,Eng.Sc NIP. : 110038400		FULL SIZE A3		SHEET NO : 12 / 57
	Date	Date	Date	Sign / Date				

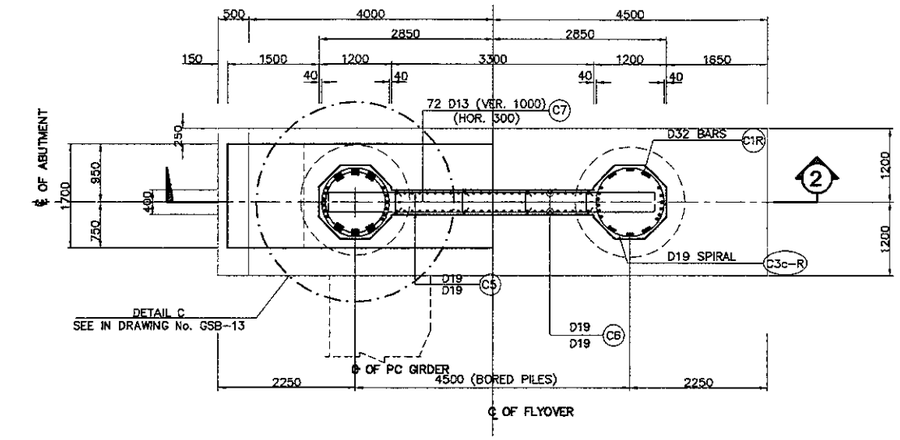

1 PLAN
SCALE 1:100

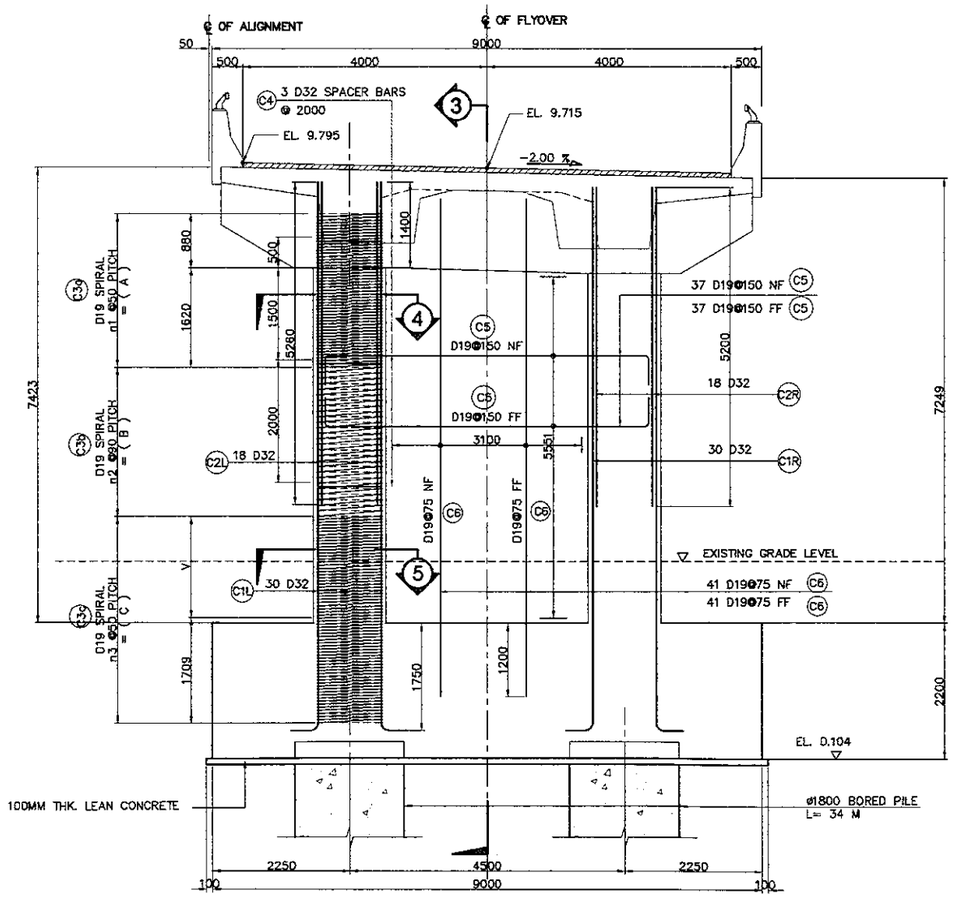

2 ELEVATION
SCALE 1:100

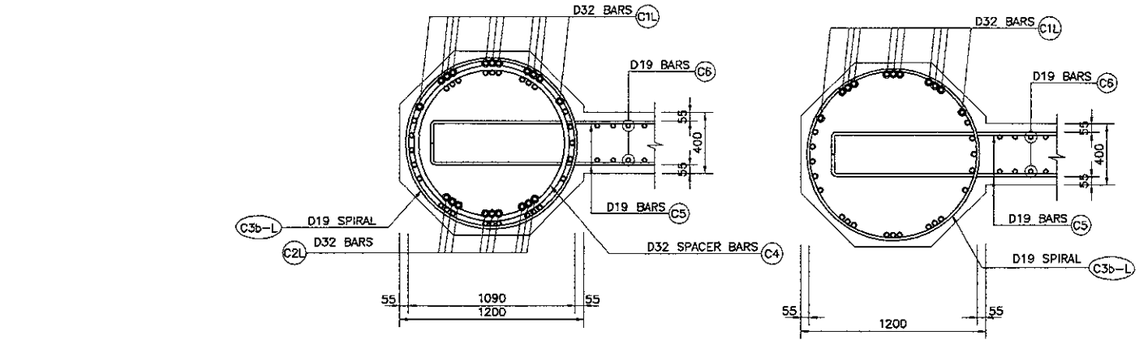

4 SECTION
SCALE 1:40

5 SECTION
SCALE 1:40

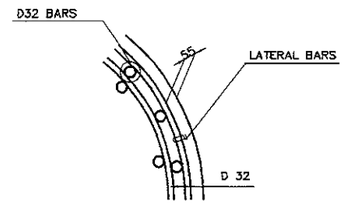

B TYPICAL BAR LAYOUT DETAIL
NOT TO SCALE

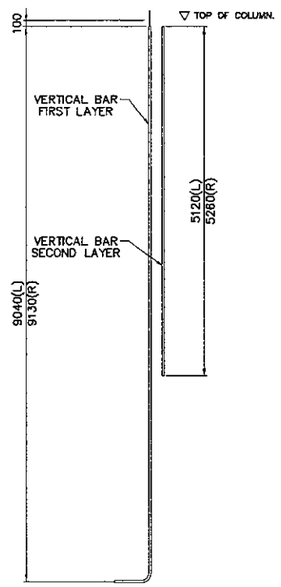

A SCHEMATIC DETAIL
NOT TO SCALE

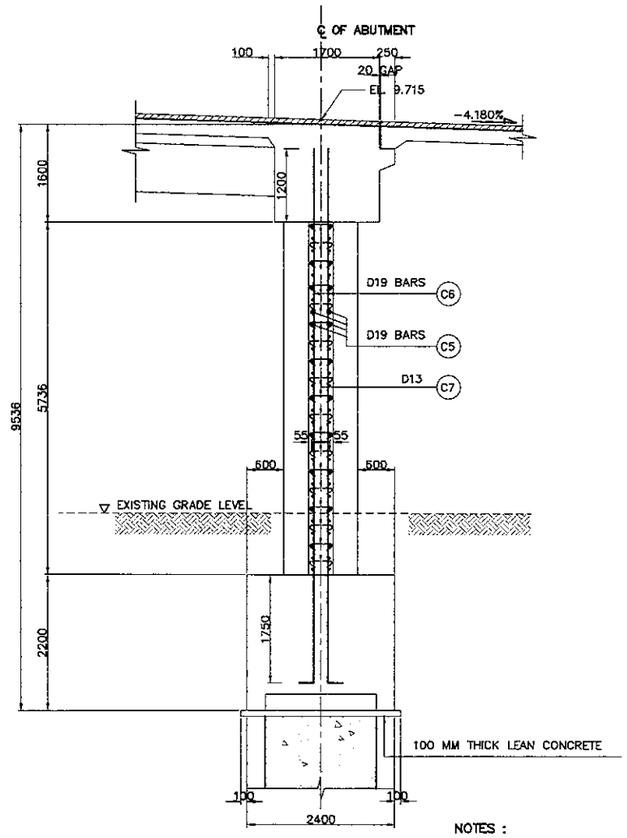

3 SECTION
SCALE 1:100

NOTES :

1. ALL DIMENSIONS ARE IN MILLIMETERS
2. ELEVATION ARE IN METERS
3. CONCRETE ABUTMENT AND FOOTING fc' = 30 MPa
4. REINFORCING STEEL : YIELD STRENGTH = 390 N/mm2

PRINTED: OCT. 18, 2006

JAPAN INTERNATIONAL COOPERATION AGENCY KATAHIRA & ENGINEERS INTERNATIONAL	DESIGNED BY	CHECKED BY	SUBMITTED BY	REPUBLIC OF INDONESIA MINISTRY OF PUBLIC WORKS DIRECTORATE GENERAL OF HIGHWAYS	PROJECT AND LOCATION :	SCALE :	DRAWING TITLE :	DRAWING NO :
	Name: A. GOURLEY	Name: T. OKUMURA	Name: M. KIUCHI		DETAILED DESIGN STUDY OF NORTH JAVA CORRIDOR FLYOVER PROJECT GEBANG FLYOVER - CONTRACT PACKAGE 2 (NAGREG - GEBANG) WEST JAVA PROVINCE	1 : 20	REINFORCEMENT COLUMN OF ABUTMENT A2 (2 OF 2)	GSB-013
	Sign	Sign	Sign	APPROVED BY: Ir. HERRY VAZA M,Eng.Sc NIP. : 110038400		FULL SIZE A3		SHEET NO : 13 / 57
	Date	Date	Date	Sign / Date				

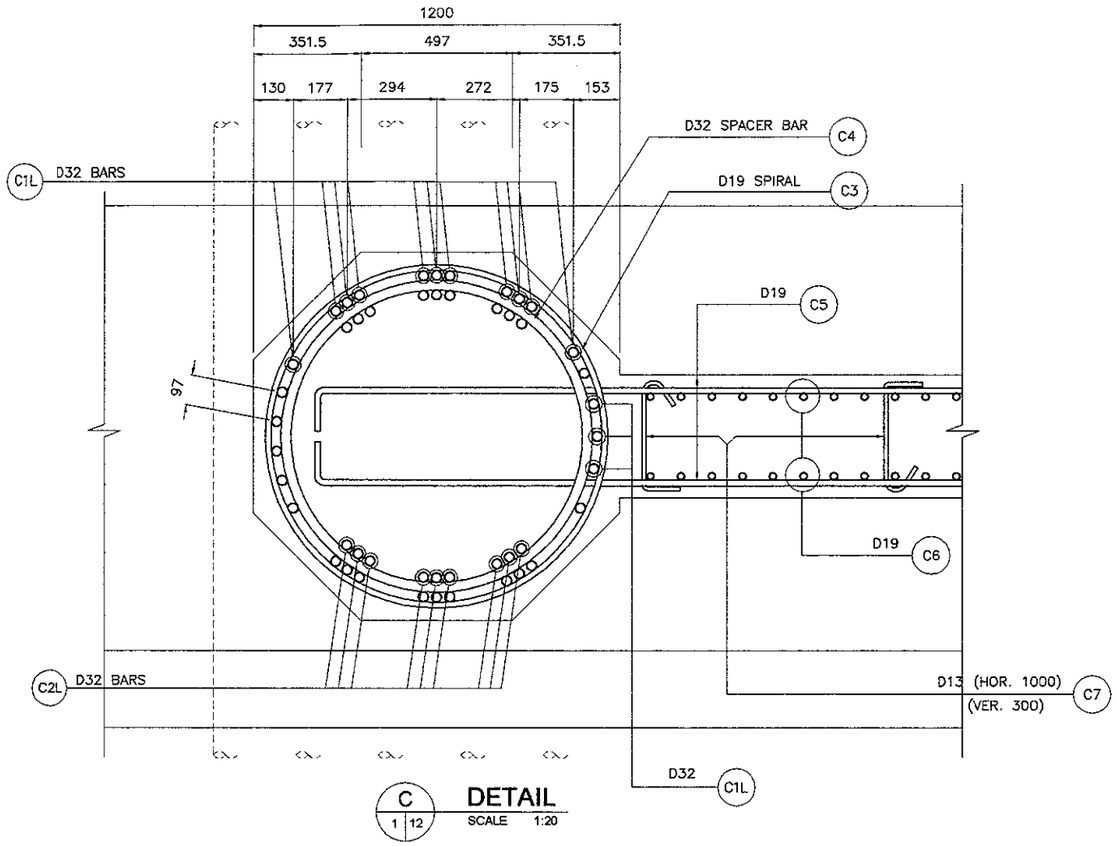

C / 1 12 **DETAIL**
SCALE 1:20

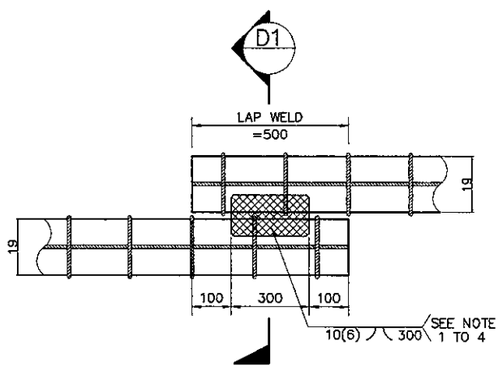

DIRECT LAP JOINT WITH BARS IN CONTACT

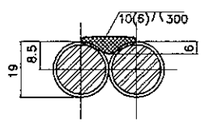

D1 **DETAIL**
NOT TO SCALE

D / . **DETAIL OF SPIRAL REINF. FULL LAP-WELD CONNECTION**
NOT TO SCALE

NOTES ON LAP-WELD CONNECTION :

1. SPIRAL REINFORCEMENT ARE LAP-WELD CONNECTED (FLARED-V-GROOVE TYPE)
2. WELDING SHOULD CONFORM TO AWS (D1.4) *STRUCTURAL WELDING CODE REINFORCED STEEL.*
3. USE ELECTRODE E90XX.
4. CARE SHOULD BE TAKEN NOT TO DAMAGE THE COLUMN MAIN BARS DURING WELDING.

NOTES :

1. ALL DIMENSIONS ARE IN MILLIMETERS
2. ELEVATION ARE IN METERS
3. CONCRETE ABUTMENT AND FOOTING fc' = 30 MPa
4. REINFORCING STEEL : YIELD STRENGTH = 390 N/mm2

BAR BENDING DIAGRAM

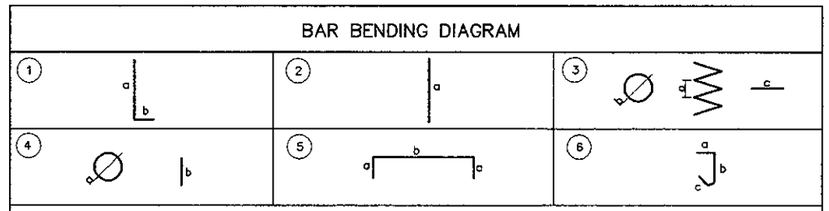

SCHEDULE OF REINFORCEMENT

LOCATION	BAR MARK	SIZE (mm)	BEND TYPE	DIMENSION (mm) OUT TO OUT a	b	c	d	e	f	LENGTH (mm)	NO. REQ'D.	UNIT WEIGHT (kg/m.)	WEIGHT (kg.)	VOLUME OF CONC. (M³)
ABUTMENT (A1)	COLUMN													
	C1L	32	1	9040	550					9590	30	6.31	1713	6.898
	C2L	32	2	5120						5120	18	6.31	582	
	C3a-L	19	3	50	1090	500				181918	1	2.23	406	
	C3b-L	19	3	90	1090	500				71340	1	2.23	159	
	C3c-L	19	3	50	1090	500				203320	1	2.23	453	
	C4	32	4	988	500					3604	3	6.31	68	
										TOTAL WEIGHT COLUMN (L) = 3,396 kg.				
	C1R	32	1	9130	550					9680	30	6.31	1728	6.791
	C2R	32	2	5260						5260	18	6.31	597	
	C3a-R	19	3	50	1090	500				181918	1	2.23	406	
	C3b-R	19	3	90	1090	500				67773	1	2.23	151	
	C3c-R	19	3	50	1090	500				263320	1	2.23	453	
	C4	32	4	988	500					3604	3	6.31	68	
										TOTAL WEIGHT CULOMN (R) = 3,388 kg.				
										TOTAL (A) WEIGHT ABUTMENT A2 (L + R) = 6,784 kg.				13.688
	WALL													
	C5	19	5	300	5300					5600	74	2.23	924	8.882
	C6	19	1	7420	500					7920	82	2.23	1448	
	C7	13	6	110	320	160				590	74	1.04	45	
										TOTAL (B) WALL = 2,417 kg.				
										TOTAL WEIGHT (A + B) = 9,201 kg.				22.570

THE REINFORCEMENT SHOWN ON THIS TABLE IS FOR REFERENCE ONLY, THE CONTRACTOR SHOULD CHECKED AND VERIFY ALL DIMENSIONS, SIZES AND QUANTITIES OF REINFORCEMENT.

SCHEDULE OF COLUMN

No. OF COLUMN	A (mm)	B (mm)	C (mm)	V (mm)	n1	n2	n3
A2 (L)	2500	1800	3350	1641	51	20	67
A2 (R)	2500	1710	3350	1641	51	19	67

JAPAN INTERNATIONAL COOPERATION AGENCY KATAHIRA & ENGINEERS INTERNATIONAL	DESIGNED BY	CHECKED BY	SUBMITTED BY	REPUBLIC OF INDONESIA MINISTRY OF PUBLIC WORKS DIRECTORATE GENERAL OF HIGHWAYS	PROJECT AND LOCATION :	SCALE :	DRAWING TITLE :	DRAWING NO :
	Name A. GOURLEY	Name T. OKUMURA	Name M. KIUCHI		DETAILED DESIGN STUDY OF NORTH JAVA CORRIDOR FLYOVER PROJECT GEBANG FLYOVER - CONTRACT PACKAGE 2 (NAGREG - GEBANG) WEST JAVA PROVINCE	1 : 80 1 : 40	REINFORCEMENT OF FOOTING ABUTMENT A1 & A2 (1 OF 2)	GSB-014
	Sign	Sign	Sign	APPROVED BY Ir. HERRY VAZA M,Eng.Sc Sign				SHEET NO :
	Date	Date	Date	NIP. : 110038400 Date		FULL SIZE A3		14 / 57

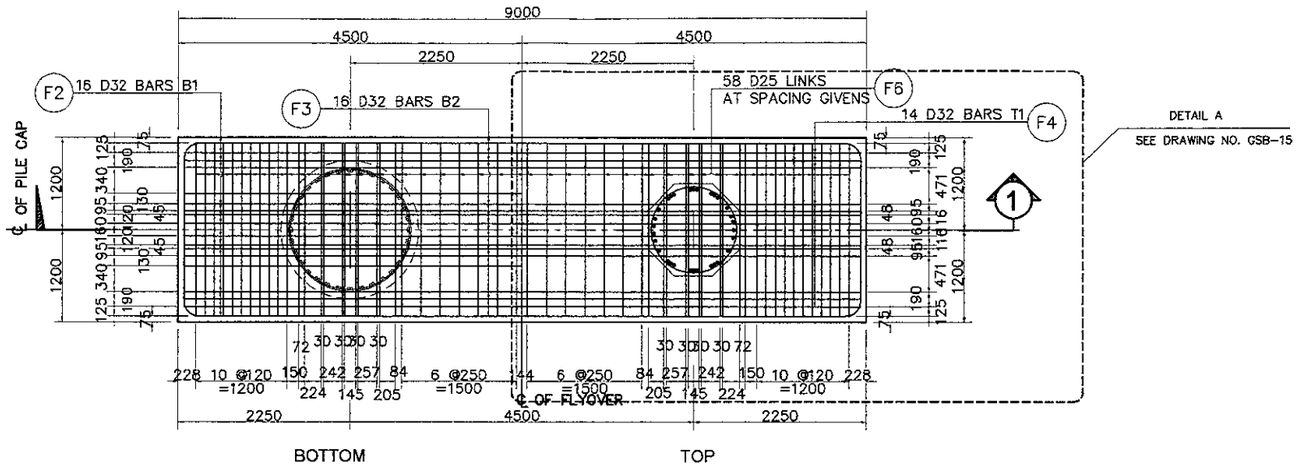

2 PLAN
SCALE 1:80

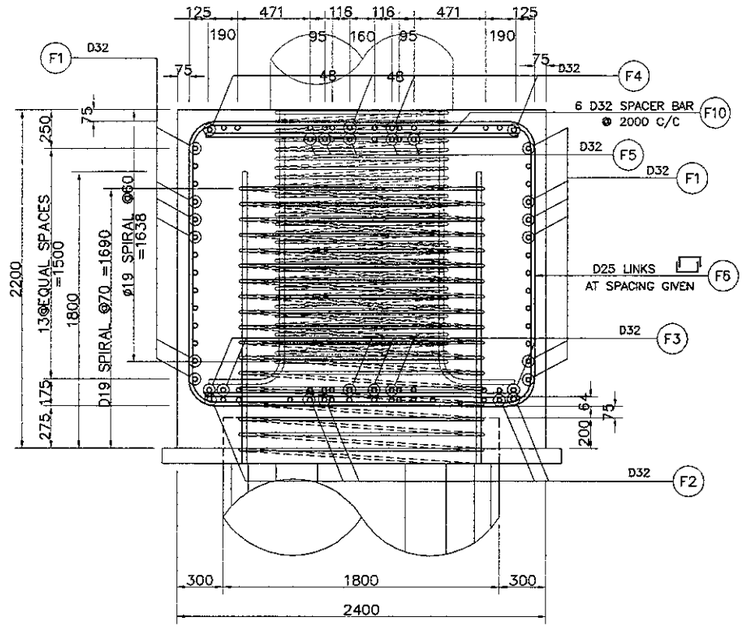

4 SECTION
SCALE 1:40

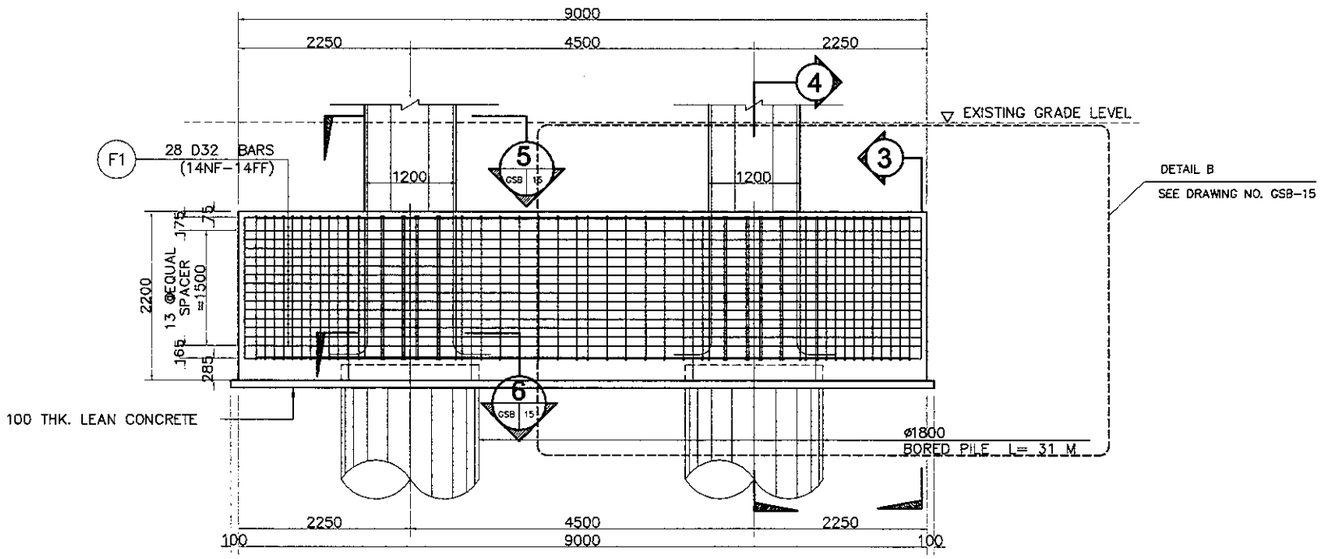

1 ELEVATION
SCALE 1:80

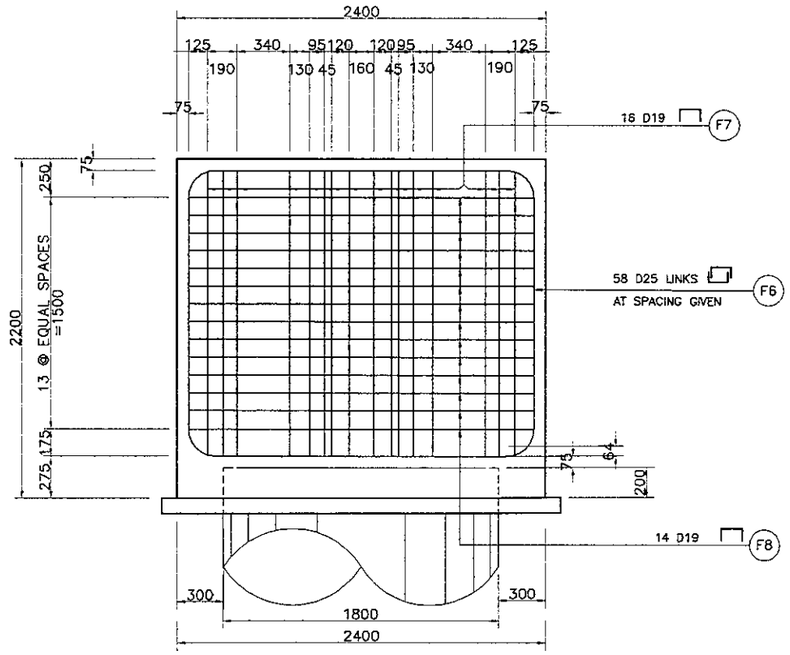

3 ELEVATION
SCALE 1:40

NOTES :

1. ALL DIMENSIONS ARE IN MILLIMETERS
2. ELEVATION ARE IN METERS
3. CONCRETE ABUTMENT AND FOOTING fc' = 30 MPa
4. REINFORCING STEEL : YIELD STRENGTH = 390 N/mm2

PRINTED: OCT. 18, 2006

JAPAN INTERNATIONAL COOPERATION AGENCY KATAHIRA & ENGINEERS INTERNATIONAL	DESIGNED BY	CHECKED BY	SUBMITTED BY	REPUBLIC OF INDONESIA MINISTRY OF PUBLIC WORKS DIRECTORATE GENERAL OF HIGHWAYS	PROJECT AND LOCATION :	SCALE :	DRAWING TITLE :	DRAWING NO :
	Name: A. GOURLEY	Name: T. OKUMURA	Name: M. KIUCHI		DETAILED DESIGN STUDY OF NORTH JAVA CORRIDOR FLYOVER PROJECT GEBANG FLYOVER - CONTRACT PACKAGE 2 (NAGREG - GEBANG) WEST JAVA PROVINCE	1 : 50 1 : 40	REINFORCEMENT OF FOOTING ABUTMENT A1 & A2 (2 OF 2)	GSB-015
	Sign	Sign	Sign	APPROVED BY: Ir. HERRY VAZA M,Eng.Sc NIP. : 110038400		FULL SIZE A3		SHEET NO : 15 / 57
	Date	Date	Date	Sign / Date				

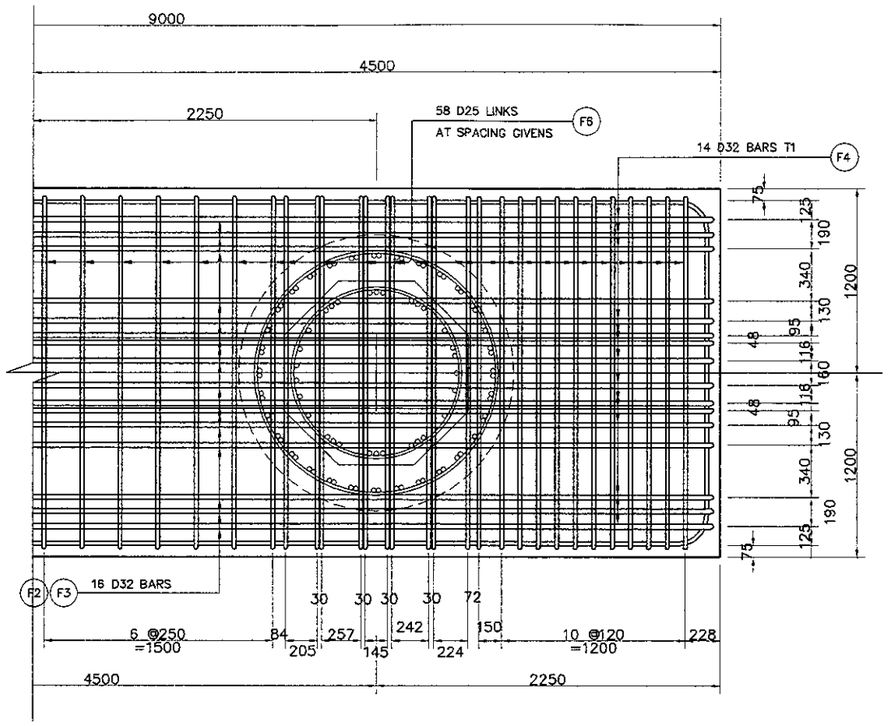

A 2|14 DETAIL
SCALE 1:40

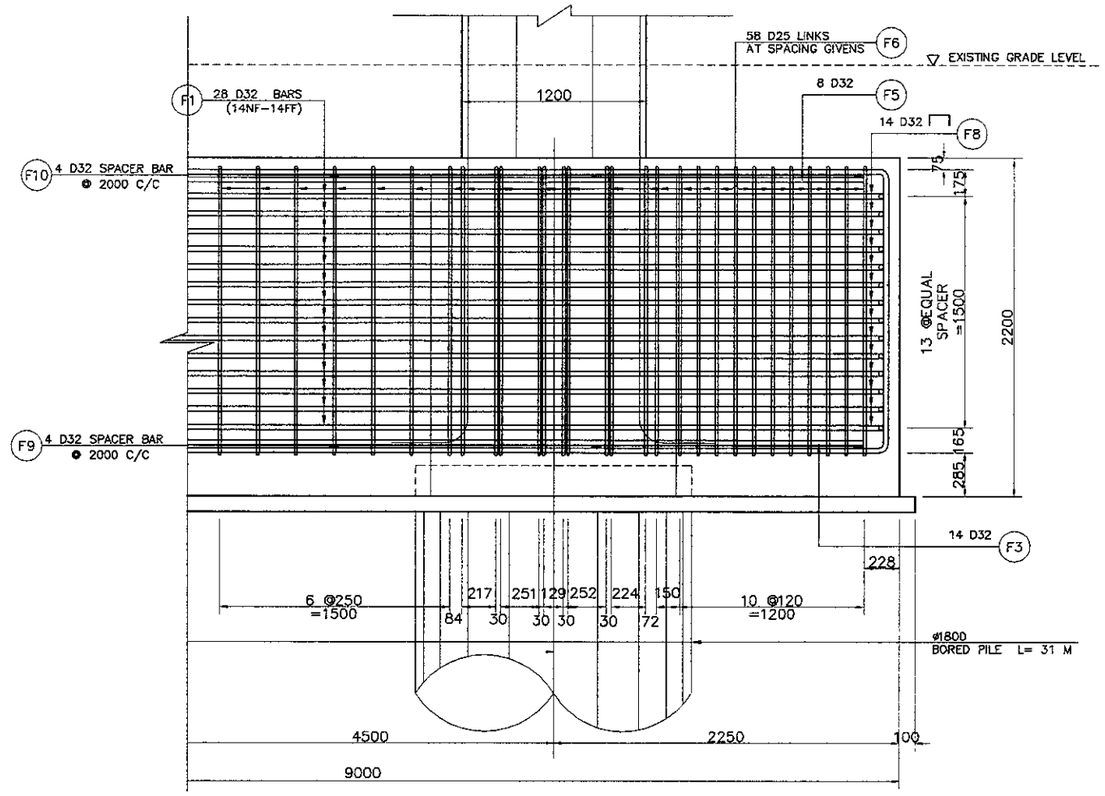

B 1|14 DETAIL
SCALE 1:40

NOTES :

1. ALL DIMENSIONS ARE IN MILLIMETERS
2. ELEVATION ARE IN METERS
3. CONCRETE ABUTMENT AND FOOTING fc' = 30 MPa
4. REINFORCING STEEL : YIELD STRENGTH = 390 N/mm2

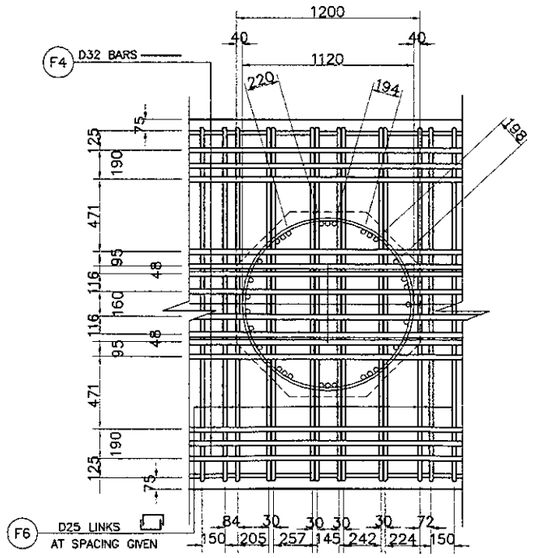

5 1|14 SECTION
SCALE 1:50

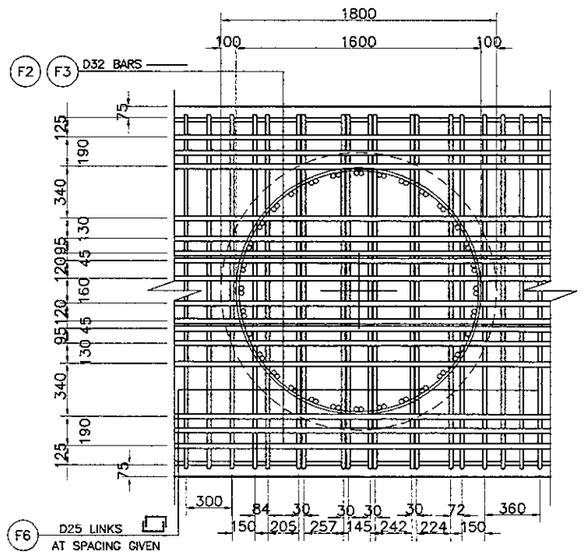

6 1|14 SECTION
SCALE 1:50

BAR BENDING DIAGRAM

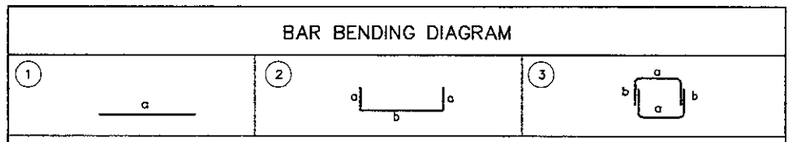

SCHEDULE OF REINFORCEMENT

LOCATION	BAR MARK	SIZE (mm)	BEND TYPE	DIMENSION (mm) OUT TO OUT a	b	c	d	e	f	LENGTH (mm)	NO. REQ'D.	UNIT WEIGHT (kg/m.)	WEIGHT (kg.)
ABUTMENT (A1 & A2)	F1	32	1	8850						8850	28	6.31	1563
	F2	32	1	8850						8850	16	6.31	893
	F3	32	1	8850						8850	14	6.31	782
	F4	32	1	8850						8850	14	6.31	782
	F5	32	1	8850						8850	8	6.31	447
	F6	25	3	2250	1600					5450	116	3.85	2433
	F7	19	2	1800	500					2800	32	2.23	200
	F8	19	2	2250	500					3250	28	2.23	203
	F9	32	1	2000						2000	4	6.31	50
	F10	32	1	2000						2000	4	6.31	50
										TOTAL WEIGHT PER 1 FOOTING =			7,403 kg.
										CONCRETE VOLUME PER 1 FOOTING =			47.520 M3
										LEAN CONCRETE VOLUME PER 1 FOOTING =			2.208 M3

THE REINFORCEMENT SHOWN ON THIS TABLE IS FOR REFERENCE ONLY, THE CONTRACTOR SHOULD CHECKED AND VERIFY ALL DIMENSIONS, SIZES AND QUANTITIES OF REINFORCEMENT.

JAPAN INTERNATIONAL COOPERATION AGENCY KATAHIRA & ENGINEERS INTERNATIONAL	DESIGNED BY	CHECKED BY	SUBMITTED BY	REPUBLIC OF INDONESIA MINISTRY OF PUBLIC WORKS DIRECTORATE GENERAL OF HIGHWAYS	PROJECT AND LOCATION :	SCALE :	DRAWING TITLE :	DRAWING NO :
	Name: A. GOURLEY	Name: T. OKUMURA	Name: M. KIUCHI		DETAILED DESIGN STUDY OF NORTH JAVA CORRIDOR FLYOVER PROJECT GEBANG FLYOVER - CONTRACT PACKAGE 2 (NAGREG - GEBANG) WEST JAVA PROVINCE	1 : 80 1 : 50	PIER COLUMN REINFORCEMENT (P1 & P13)	GSB-016
	Sign	Sign	Sign	APPROVED BY: Ir. HERRY VAZA M,Eng.Sc NIP. : 110038400 — Sign		FULL SIZE A3		SHEET NO : 16 / 57
	Date	Date	Date	Date				

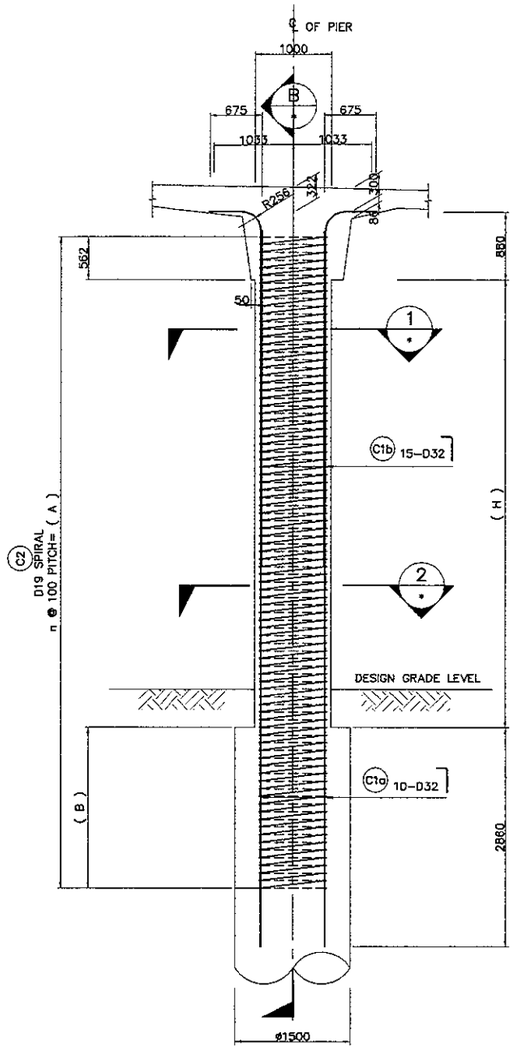

A ELEVATION
SCALE 1 : 80

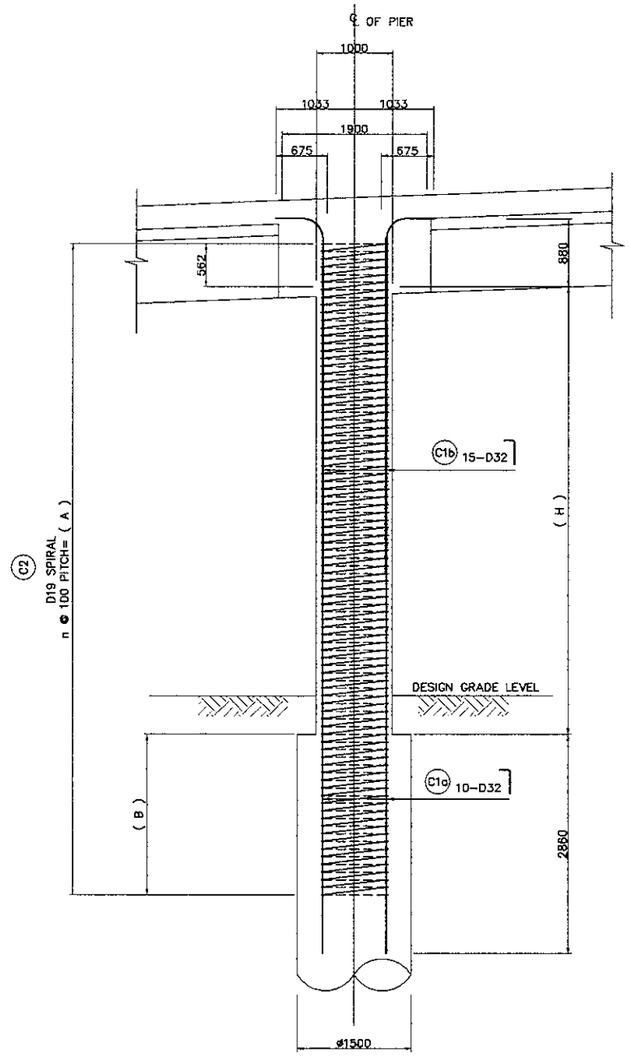

B ELEVATION
SCALE 1 : 80

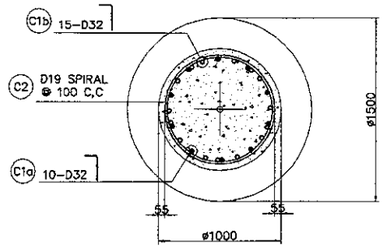

1 SECTION
SCALE 1 : 50

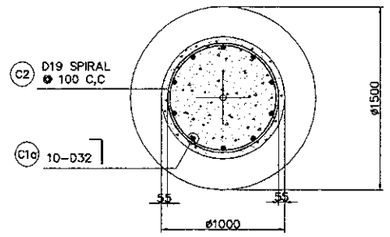

2 SECTION
SCALE 1 : 50

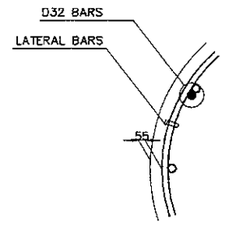

C TYPICAL BAR LAYOUT DETAIL
NOT TO SCALE

NOTES ON LAP-WELD CONNECTION :
1. SPIRAL REINFORCEMENT ARE LAP-WELD CONNECTED (FLARED-V-GROOVE TYPE)
2. WELDING SHOULD CONFORM TO AWS (D1.4) *STRUCTURAL WELDING CODE REINFORCED STEEL.*
3. USE ELECTRODE E90XX.
4. CARE SHOULD BE TAKEN NOT TO DAMAGE THE COLUMN MAIN BARS DURING WELDING.

NOTES :
1. ALL DIMENSIONS ARE IN MILLIMETERS
2. CONCRETE : fc' = 30 MPa
3. REINFORCING STEEL : YIELD STRENGTH = 390 N/mm2

D1

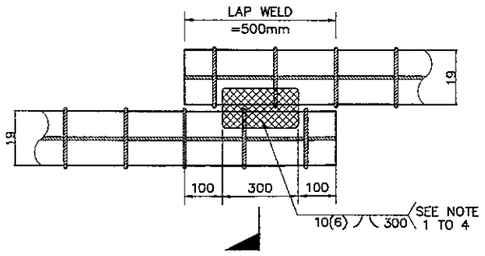

DIRECT LAP JOINT WITH BARS IN CONTACT

D DETAIL OF SPIRAL REINF. FULL LAP-WELD CONNECTION
NOT TO SCALE

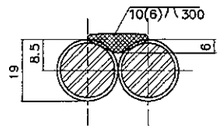

SECTION-D1
SINGLE FLARED-V-GROOVE WELD

COLUMN TYPE		CL-GF02
SIZE (mm)		ø 1000
MAIN BARS	SIZE (mm)	32
	NO. LAYERS	1
	NO. OF PCS.(a)	10
	NO. OF PCS.(b)	15
SPIRAL	SIZE (mm)	19

SCHEDULE OF PIER

PIER NO.	HEIGHT H (mm)	A (mm)	B (mm)	n
P1L	6887	9500	2051	96
P1R	6797	9400	2041	95
P13L	7652	10300	2086	104
P13R	7562	10200	2076	103

BAR BENDING DIAGRAM

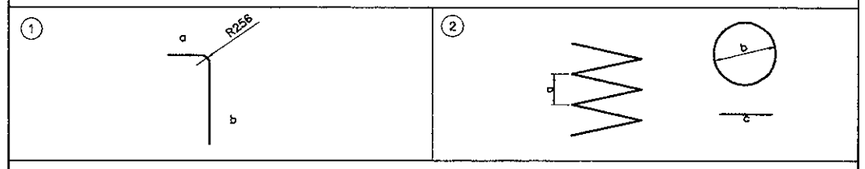

SCHEDULE OF REINFORCEMENT

LOCATION	BAR MARK	SIZE (mm)	BEND TYPE	DIMENSION(mm) OUT TO OUT a	b	c	d	e	f	LENGTH (mm)	NO. REQ'D.	UNIT WEIGHT (kg/m)	WEIGHT (kg)	VOLUME CONCRETE (m3)
P1L	C1a	32	1	675	10630					11305	10	6.31	713	5.441
	C1b	32	1	675	6020					6695	15	6.31	634	
	C2	19	2	100	890	500				279718	1	2.23	624	
											SUB TOTAL =		1,971 Kgs	
P1R	C1a	32	1	675	10540					11215	10	6.31	707	5.370
	C1b	32	1	675	5960					6635	15	6.31	628	
	C2	19	2	100	890	500				276689	1	2.23	617	
											SUB TOTAL =		1,952 Kgs	
											TOTAL =		3,923 Kgs	10.810
P13L	C1a	32	1	675	11400					12075	10	6.31	762	6.045
	C1b	32	1	675	6480					7155	15	6.31	677	
	C2	19	2	100	890	500				273777	1	2.23	611	
											SUB TOTAL =		2,050 Kgs	
P13R	C1a	32	1	675	11300					11975	10	6.31	756	5.974
	C1b	32	1	675	6420					7095	15	6.31	672	
	C2	19	2	100	890	500				299989	1	2.23	669	
											SUB TOTAL =		2,097 Kgs	
											TOTAL =		4,147 Kgs	12.019

THE SCHEDULE OF REINFORCEMENT SHOWN ON THIS TABLE IS FOR REFERENCE ONLY. THE CONTRACTOR SHOULD CHECKED AND VERIFY ALL DIMENSIONS, SIZES AND QUANTITIES OF REINFORCEMENT.

JAPAN INTERNATIONAL COOPERATION AGENCY KATAHIRA & ENGINEERS INTERNATIONAL	DESIGNED BY	CHECKED BY	SUBMITTED BY	REPUBLIC OF INDONESIA MINISTRY OF PUBLIC WORKS DIRECTORATE GENERAL OF HIGHWAYS	PROJECT AND LOCATION :	SCALE :	DRAWING TITLE :	DRAWING NO :
	Name: A. GOURLEY	Name: T. OKUMURA	Name: M. KIUCHI		DETAILED DESIGN STUDY OF NORTH JAVA CORRIDOR FLYOVER PROJECT GEBANG FLYOVER - CONTRACT PACKAGE 2 (NAGREG - GEBANG) WEST JAVA PROVINCE	1 : 80 1 : 50	PIER COLUMN REINFORCEMENT (P2, P14, P15)	GSB-017
	Sign	Sign	Sign	APPROVED BY: Ir. HERRY VAZA M,Eng.Sc NIP. : 110038400		FULL SIZE A3		SHEET NO : 17 / 57
	Date	Date	Date	Sign / Date				

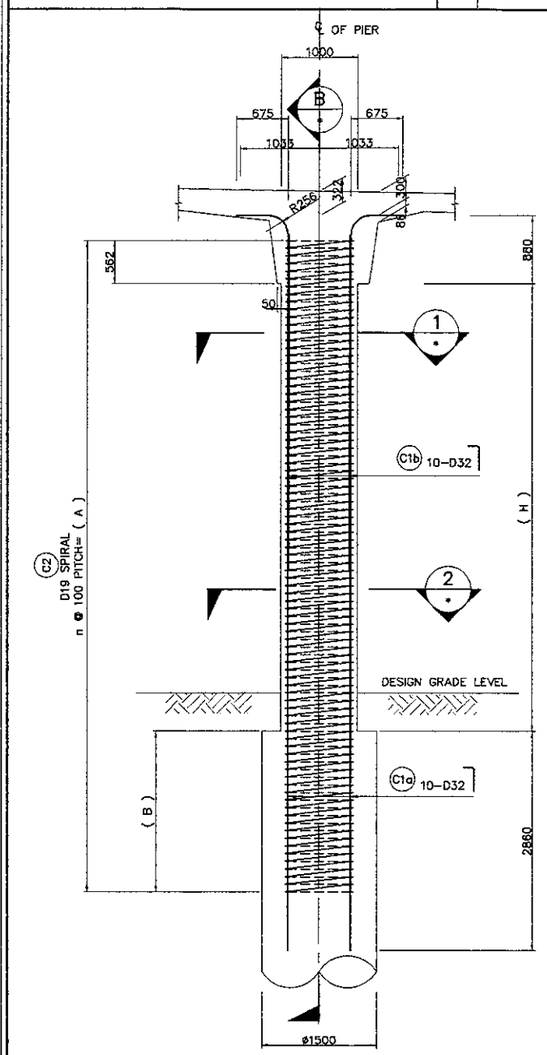

A ELEVATION
SCALE 1 : 80

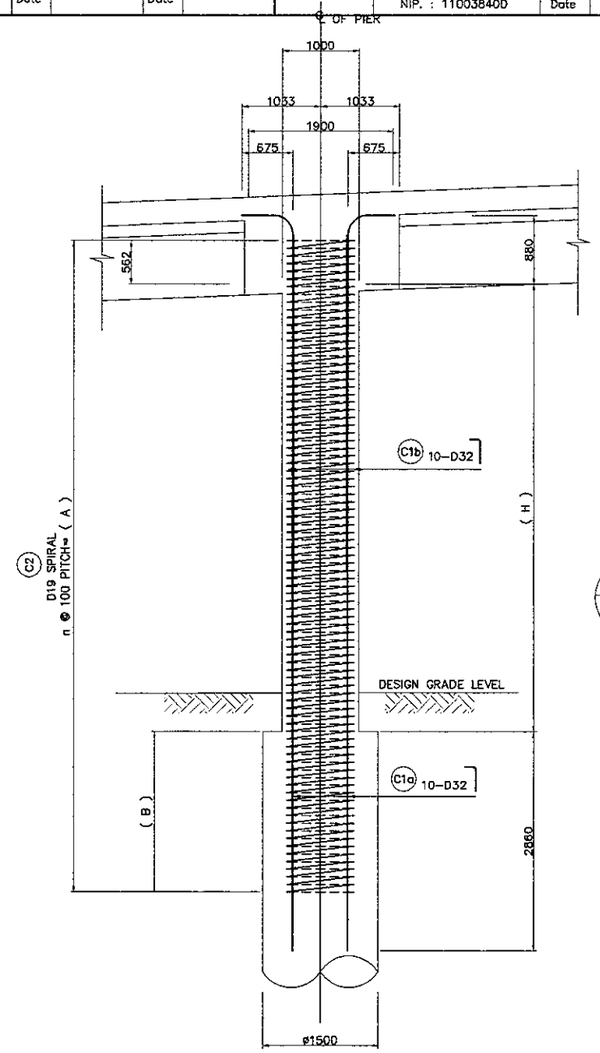

B ELEVATION
SCALE 1 : 80

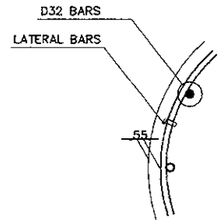

C TYPICAL BAR LAYOUT DETAIL
NOT TO SCALE

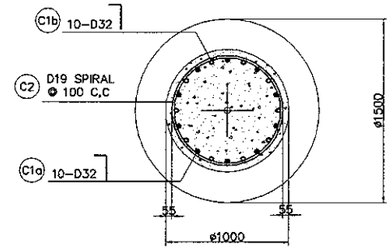

*1 SECTION
SCALE 1 : 50

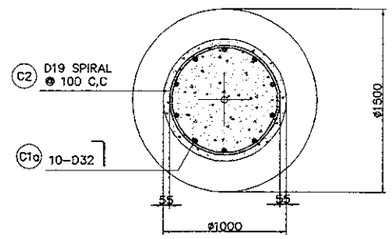

*2 SECTION
SCALE 1 : 50

NOTES ON LAP-WELD CONNECTION :
1. SPIRAL REINFORCEMENT ARE LAP-WELD CONNECTED (FLARED-V-GROOVE TYPE)
2. WELDING SHOULD CONFORM TO AWS (D1.4) *STRUCTURAL WELDING CODE REINFORCED STEEL.*
3. USE ELECTRODE E90XX.
4. CARE SHOULD BE TAKEN NOT TO DAMAGE THE COLUMN MAIN BARS DURING WELDING.

D1

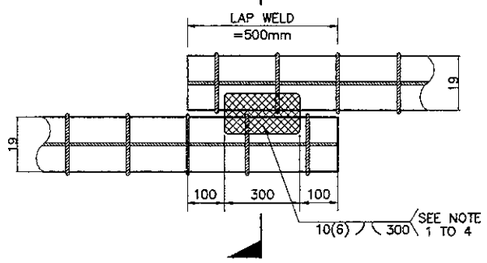

DIRECT LAP JOINT WITH BARS IN CONTACT

D DETAIL OF SPIRAL REINF. FULL LAP-WELD CONNECTION
NOT TO SCALE

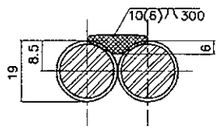

SECTION-D1
SINGLE FLARED-V-GROOVE WELD

COLUMN TYPE		CL-GFD1
SIZE (mm)		ø1000
MAIN BARS	SIZE (mm)	32
	NO. LAYERS	1
	NO. OF PCS.(a)	10
	NO. OF PCS.(b)	10
SPIRAL	SIZE (mm)	19

NOTES :
1. ALL DIMENSIONS ARE IN MILLIMETERS
2. CONCRETE : fc' = 30 MPa
3. REINFORCING STEEL : YIELD STRENGTH = 390 N/mm2

SCHEDULE OF PIER

PIER NO.	HEIGHT H (mm)	A (mm)	B (mm)	n
P2L	7467	10100	2071	102
P2R	7397	10000	2041	101
P14L	7267	9900	2071	100
P14R	7177	9800	2061	99
P15L	6752	9400	2086	95
P15R	6662	9300	2076	94

BAR BENDING DIAGRAM

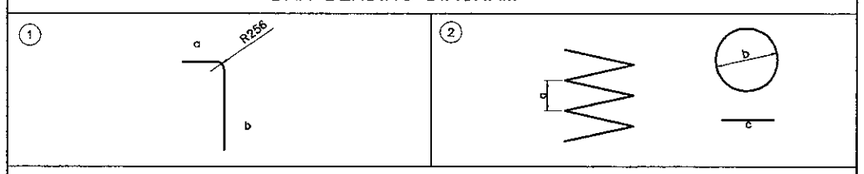

SCHEDULE OF REINFORCEMENT

LOCATION	BAR MARK	SIZE (mm)	BEND TYPE	DIMENSION(mm) OUT TO OUT a	b	c	d	e	f	LENGTH (mm)	NO. REQ'D.	UNIT WEIGHT (kg/m)	WEIGHT (kg)	VOLUME CONCRETE (m3)
P2L	C1a	32	1	675	11200					11875	10	6.31	749	5.899
	C1b	32	1	675	5610					6285	10	6.31	397	
	C2	19	2	100	890	500				297077	1	2.23	663	
											SUB TOTAL =		1,809 Kgs	
P2R	C1a	32	1	675	11130					11805	10	6.31	745	5.844
	C1b	32	1	675	5580					6255	10	6.31	395	
	C2	19	2	100	890	500				294164	1	2.23	656	
											SUB TOTAL =		1,796 Kgs	
											TOTAL P2 =		6,605 Kgs	11.743
P14L	C1a	32	1	675	11000					11675	10	6.31	737	5.741
	C1b	32	1	675	5520					6195	10	6.31	391	
	C2	19	2	100	890	500				291252	1	2.23	649	
											SUB TOTAL =		1,777 Kgs	
P14R	C1a	32	1	675	10900					11575	10	6.31	730	5.670
	C1b	32	1	675	5470					6145	10	6.31	388	
	C2	19	2	100	890	500				288339	1	2.23	643	
											SUB TOTAL =		1,761 Kgs	
											TOTAL P14 =		3,538 Kgs	11.411
P15L	C1a	32	1	675	10500					11175	10	6.31	705	5.334
	C1b	32	1	675	5256					5931	10	6.31	374	
	C2	19	2	100	890	500				276689	1	2.23	617	
											SUB TOTAL =		1,696 Kgs	
P15R	C1a	32	1	675	10400					11075	10	6.31	699	5.263
	C1b	32	1	675	5720					6395	10	6.31	404	
	C2	19	2	100	890	500				273777	1	2.23	611	
											SUB TOTAL =		1,714 Kgs	
											TOTAL P15 =		3,410 Kgs	10.597

THE SCHEDULE OF REINFORCEMENT SHOWN ON THIS TABLE IS FOR REFERENCE ONLY. THE CONTRACTOR SHOULD CHECKED AND VERIFY ALL DIMENSIONS, SIZES AND QUANTITIES OF REINFORCEMENT.

JAPAN INTERNATIONAL COOPERATION AGENCY KATAHIRA & ENGINEERS INTERNATIONAL	DESIGNED BY	CHECKED BY	SUBMITTED BY	REPUBLIC OF INDONESIA MINISTRY OF PUBLIC WORKS DIRECTORATE GENERAL OF HIGHWAYS	PROJECT AND LOCATION :	SCALE :	DRAWING TITLE :	DRAWING NO :
	Name: A. GOURLEY	Name: T. OKUMURA	Name: M. KIUCHI		DETAILED DESIGN STUDY OF NORTH JAVA CORRIDOR FLYOVER PROJECT GEBANG FLYOVER - CONTRACT PACKAGE 2 (NAGREG - GEBANG) WEST JAVA PROVINCE	1 : 80 1 : 50 FULL SIZE A3	PIER COLUMN REINFORCEMENT (P3)	GSB-018
	Sign:	Sign:	Sign:	APPROVED BY: Ir. HERRY VAZA M,Eng.Sc NIP. : 110038400				SHEET NO : 18 / 57
	Date:	Date:	Date:	Sign: / Date:				

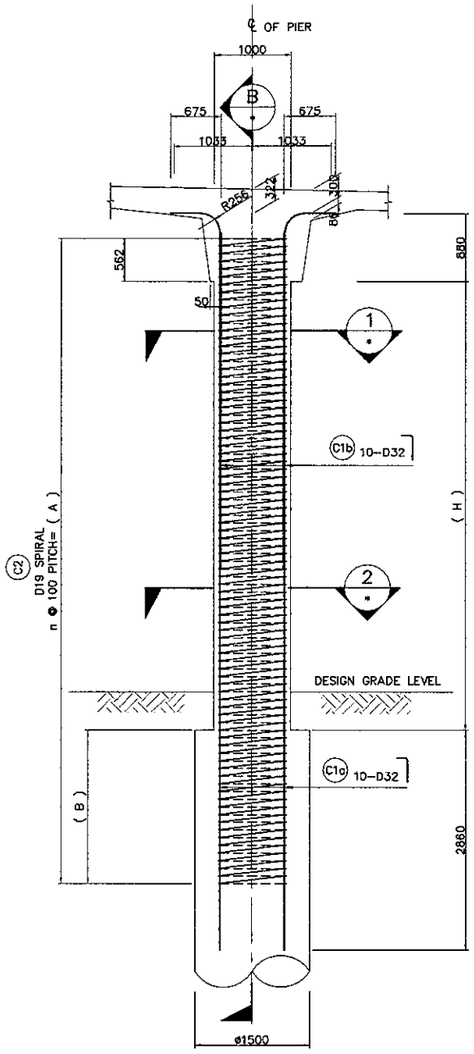

A ELEVATION
SCALE 1 : 80

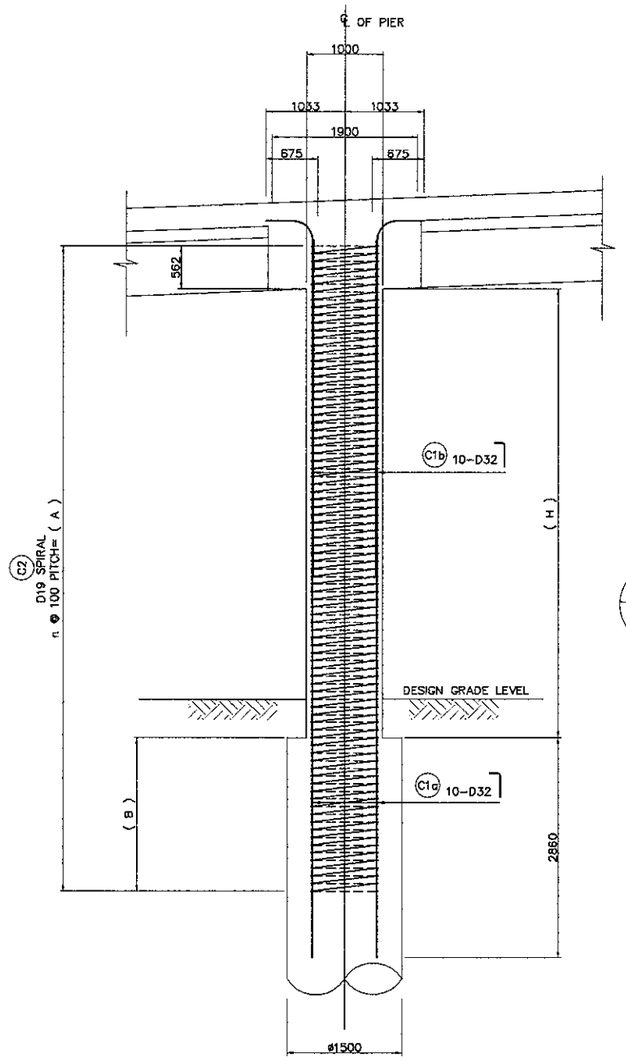

B ELEVATION
SCALE 1 : 80

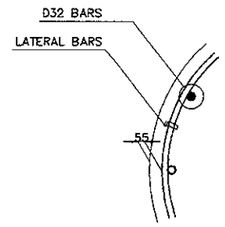

C TYPICAL BAR LAYOUT DETAIL
NOT TO SCALE

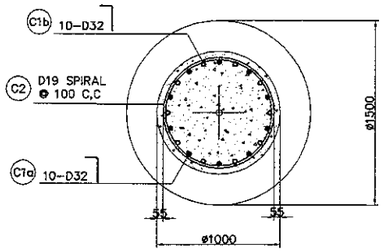

*1 SECTION
SCALE 1 : 50

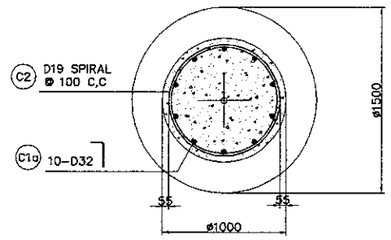

*2 SECTION
SCALE 1 : 50

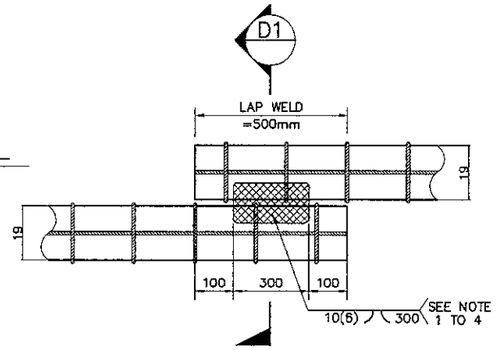

DIRECT LAP JOINT WITH BARS IN CONTACT

D DETAIL OF SPIRAL REINF.
FULL LAP-WELD CONNECTION
NOT TO SCALE

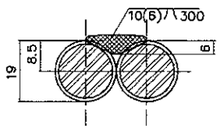

SECTION-D1
SINGLE FLARED-V-GROOVE WELD

NOTES ON LAP-WELD CONNECTION :
1. SPIRAL REINFORCEMENT ARE LAP-WELD CONNECTED (FLARED-V-GROOVE TYPE)
2. WELDING SHOULD CONFORM TO AWS (D1.4) *STRUCTURAL WELDING CODE REINFORCED STEEL.*
3. USE ELECTRODE E90XX.
4. CARE SHOULD BE TAKEN NOT TO DAMAGE THE COLUMN MAIN BARS DURING WELDING.

BAR BENDING DIAGRAM

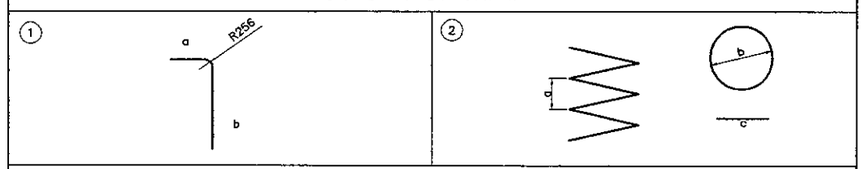

SCHEDULE OF REINFORCEMENT

LOCATION	BAR MARK	SIZE (mm)	BEND TYPE	DIMENSION(mm) OUT TO OUT a	b	c	d	e	f	LENGTH (mm)	NO. REQ'D.	UNIT WEIGHT (kg/m)	WEIGHT (kg)	VOLUME CONCRETE (m3)
P3L	C1a	32	1	675	12130					12805	10	6.31	808	6.630
	C1b	32	1	675	6080					6755	10	6.31	426	
	C2	19	2	100	890	500				323777	1	2.23	720	
											SUB TOTAL =		1,954 Kgs	
P3R	C1a	32	1	675	12040					12715	10	6.31	803	6.559
	C1b	32	1	675	6040					6715	10	6.31	424	
	C2	19	2	100	890	500				320377	1	2.23	714	
											SUB TOTAL =		1,941 Kgs	
											TOTAL P3 =		3,895 Kgs	13.190

THE SCHEDULE OF REINFORCEMENT SHOWN ON THIS TABLE IS FOR REFERENCE ONLY. THE CONTRACTOR SHOULD CHECKED AND VERIFY ALL DIMENSIONS, SIZES AND QUANTITIES OF REINFORCEMENT.

NOTES :
1. ALL DIMENSIONS ARE IN MILLIMETERS
2. CONCRETE : fc' = 30 MPa
3. REINFORCING STEEL : YIELD STRENGTH = 390 N/mm2

COLUMN TYPE		CL-GF01
SIZE (mm)		1000 ø
MAIN BARS	SIZE (mm)	32
	NO. LAYERS	1
	NO. OF PCS.(a)	10
	NO. OF PCS.(b)	10
SPIRAL	SIZE (mm)	19

SCHEDULE OF PIER

PIER NO.	HEIGHT H (mm)	A (mm)	B (mm)	n
P3L	8393	11000	2045	111
P3R	8303	10900	2035	110

PRINTED: OCT. 18, 2006

JAPAN INTERNATIONAL COOPERATION AGENCY KATAHIRA & ENGINEERS INTERNATIONAL	DESIGNED BY	CHECKED BY	SUBMITTED BY	REPUBLIC OF INDONESIA MINISTRY OF PUBLIC WORKS DIRECTORATE GENERAL OF HIGHWAYS	PROJECT AND LOCATION :	SCALE :	DRAWING TITLE :	DRAWING NO :
	Name A. GOURLEY	Name T. OKUMURA	Name M. KIUCHI		DETAILED DESIGN STUDY OF NORTH JAVA CORRIDOR FLYOVER PROJECT GEBANG FLYOVER - CONTRACT PACKAGE 2 (NAGREG - GEBANG) WEST JAVA PROVINCE	1 : 80 1 : 50	PIER COLUMN REINFORCEMENT P4 & P12 (EXP)	GSB-019
	Sign	Sign	Sign	APPROVED BY Ir. HERRY VAZA M,Eng.Sc Sign		FULL SIZE A3		SHEET NO :
	Date	Date	Date	NIP. : 110038400 Date				19 / 57

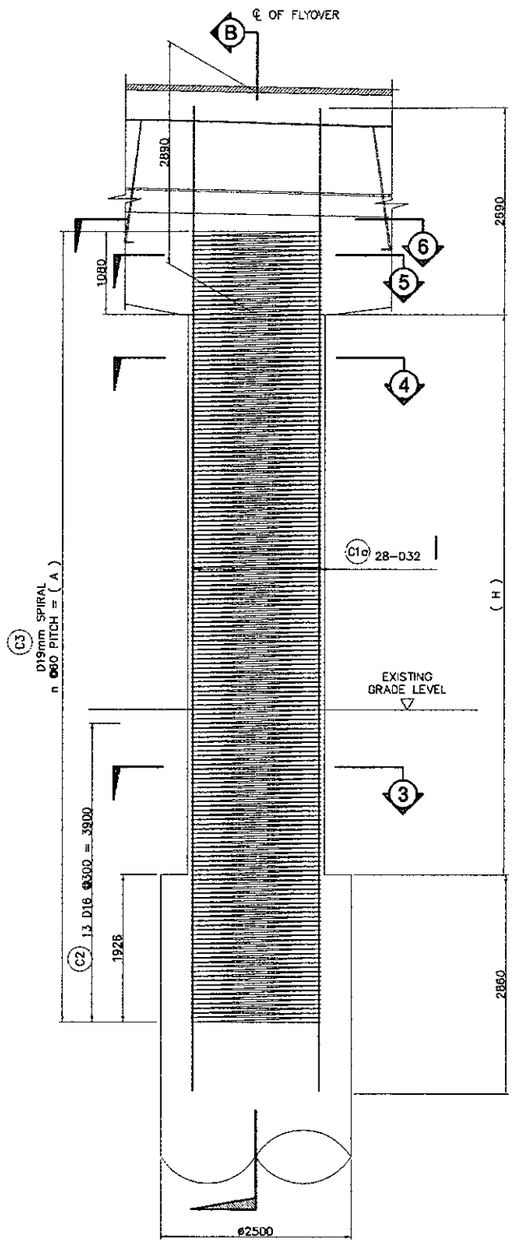

1 ELEVATION
SCALE 1:80

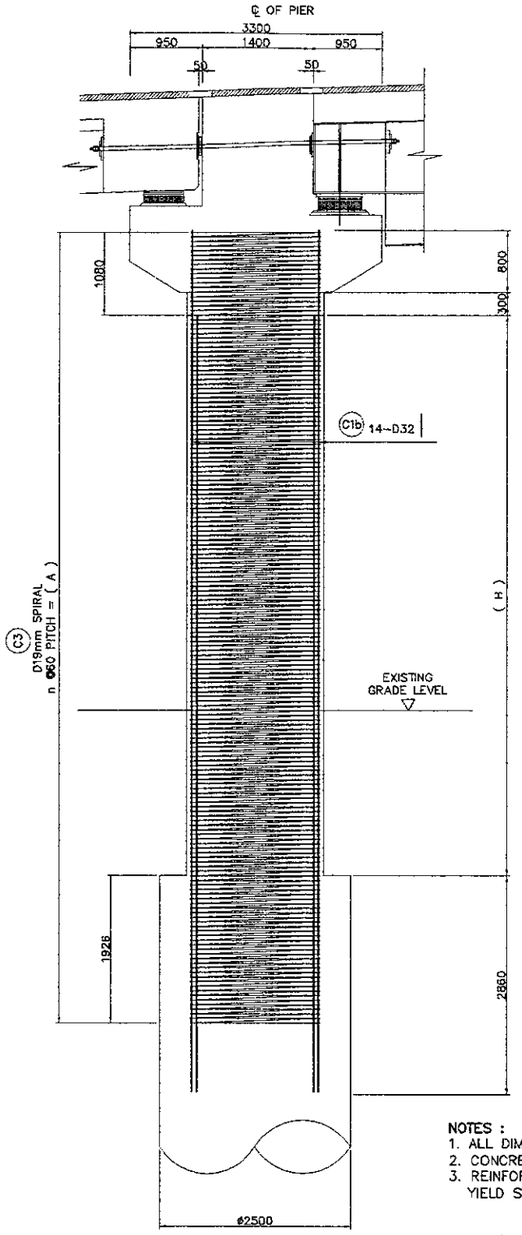

2 ELEVATION
SCALE 1:80

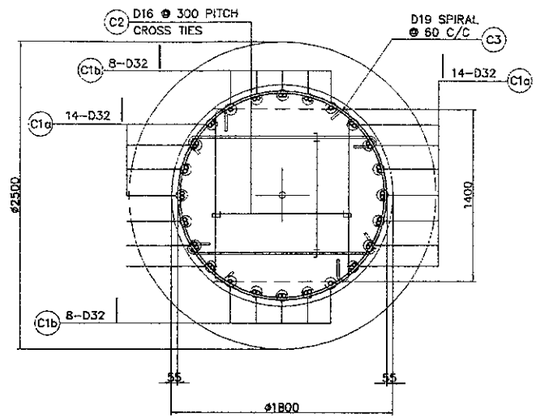

3 SECTION
SCALE 1:50

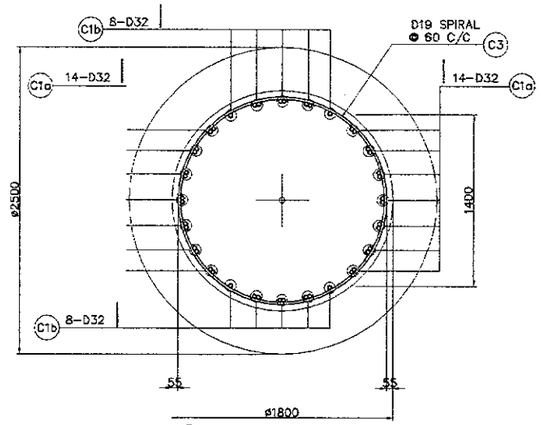

4 SECTION
SCALE 1:50

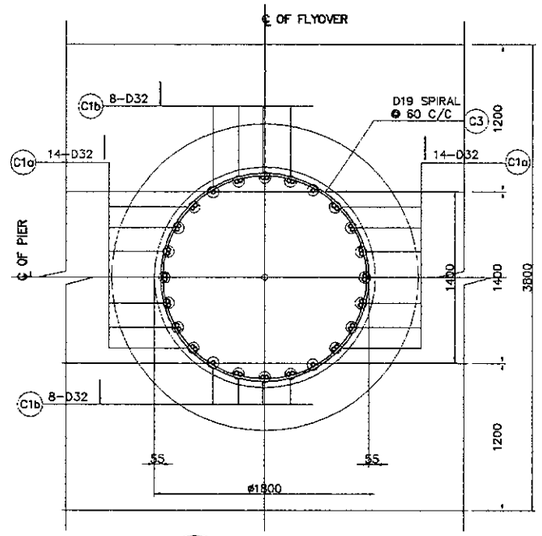

5 SECTION
SCALE 1:50

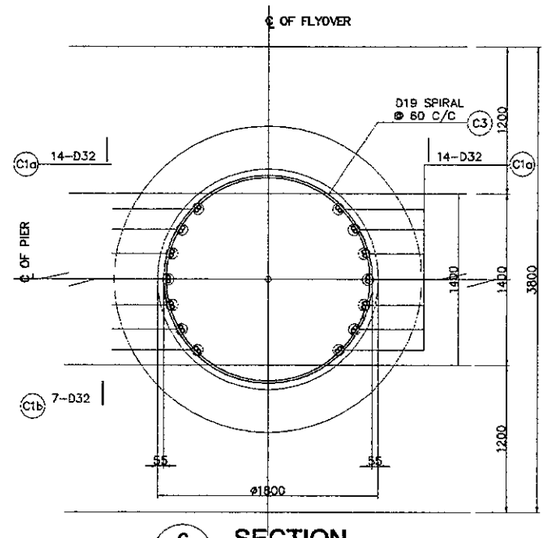

6 SECTION
SCALE 1:50

NOTES :
1. ALL DIMENSIONS ARE IN MILLIMETERS
2. CONCRETE : fc' = 30 MPa
3. REINFORCING STEEL :
   YIELD STRENGTH = 390 N/mm2

SCHEDULE OF PIER			
PIER NO.	HEIGHT H (mm)	A (mm)	n (mm)
P4	7314	10360	149
P12	6148	9170	132

COLUMN TYPE		CL-GF03
SIZE (mm)		ø1800
MAIN BARS	SIZE (mm)	32
	NO. LAYERS	1
	NO. OF PCS.(a)	28
	NO. OF PCS.(b)	14
SPIRAL	SIZE (mm)	19

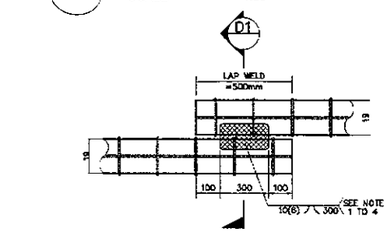

DIRECT LAP JOINT WITH BARS IN CONTACT

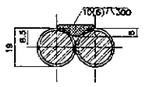

SECTION-B1
SINGLE FLARED-V-GROOVE WELD

B DETAIL OF SPIRAL REINF.
FULL LAP-WELD CONNECTION
NOT TO SCALE

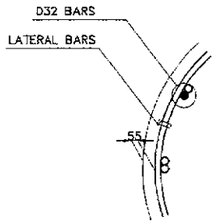

A TYPICAL BAR
LAYOUT DETAIL
NOT TO SCALE

NOTES ON LAP-WELD CONNECTION :
1. SPIRAL REINFORCEMENT ARE LAP-WELD CONNECTED (FLARED-V-GROOVE TYPE)
2. WELDING SHOULD CONFORM TO AWS (D1.4) *STRUCTURAL WELDING CODE REINFORCED STEEL.*
3. USE ELECTRODE E90XX.
4. CARE SHOULD BE TAKEN NOT TO DAMAGE THE COLUMN MAIN BARS DURING WELDING.

BAR BENDING DIAGRAM

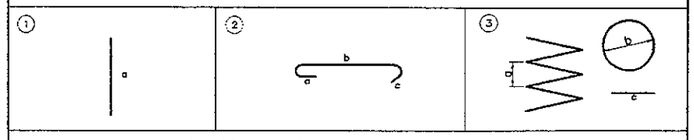

SCHEDULE OF REINFORCEMENT

LOCATION	BAR MARK	SIZE (mm)	BEND TYPE	DIMENSION(mm) OUT TO OUT a	b	c	d	e	f	LENGTH (mm)	NO. REQ'D.	UNIT WEIGHT (kg/m)	WEIGHT (kg)	VOLUME CONCRETE (m3)
P4	C1a	32	1	12864						12864	28	6.31	2273	18.578
	C1b	32	1	11274						11274	16	6.31	1138	
	C2	16	2	130	1400	200				1730	134	1.56	363	
	C3	19	3	60	1690	500				951248	1	2.23	2121	
											TOTAL P4 =		5.895	Kgs
P12	C1a	32	1	11698						11698	28	6.31	2067	15.618
	C1b	32	1	10108						10108	16	6.31	1020	
	C2	16	2	130	1400	200				1730	120	1.56	324	
	C3	19	3	60	1690	500				785701	1	2.23	1752	
											TOTAL P12 =		5.163	Kgs

THE SCHEDULE OF REINFORCEMENT SHOWN ON THIS TABLE IS FOR REFERENCE ONLY. THE CONTRACTOR SHOULD CHECKED AND VERIFY ALL DIMENSIONS, SIZES AND QUANTITES OF REINFORCEMENT.

PRINTED: OCT. 30, 2006

JAPAN INTERNATIONAL COOPERATION AGENCY KATAHIRA & ENGINEERS INTERNATIONAL	DESIGNED BY	CHECKED BY	SUBMITTED BY	REPUBLIC OF INDONESIA MINISTRY OF PUBLIC WORKS DIRECTORATE GENERAL OF HIGHWAYS	PROJECT AND LOCATION :	SCALE :	DRAWING TITLE :	DRAWING NO :
	Name: A. GOURLEY	Name: T. OKUMURA	Name: M. KIUCHI		DETAILED DESIGN STUDY OF NORTH JAVA CORRIDOR FLYOVER PROJECT GEBANG FLYOVER - CONTRACT PACKAGE 2 (NAGREG - GEBANG) WEST JAVA PROVINCE	1 : 80 1 : 50	PIER COLUMN REINFORCEMENT P7 (EXP)	GSB-020
	Sign	Sign	Sign	APPROVED BY: Ir. HERRY VAZA M,Eng.Sc NIP. : 110038400				SHEET NO : 20 / 57
	Date	Date	Date	Sign / Date		FULL SIZE A3		

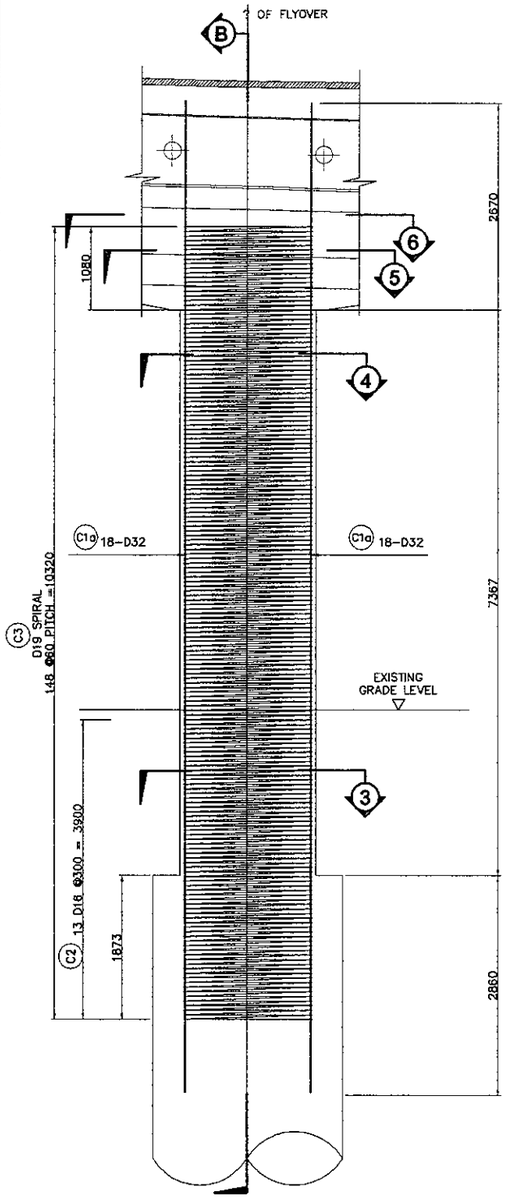

1 ELEVATION
SCALE 1:80

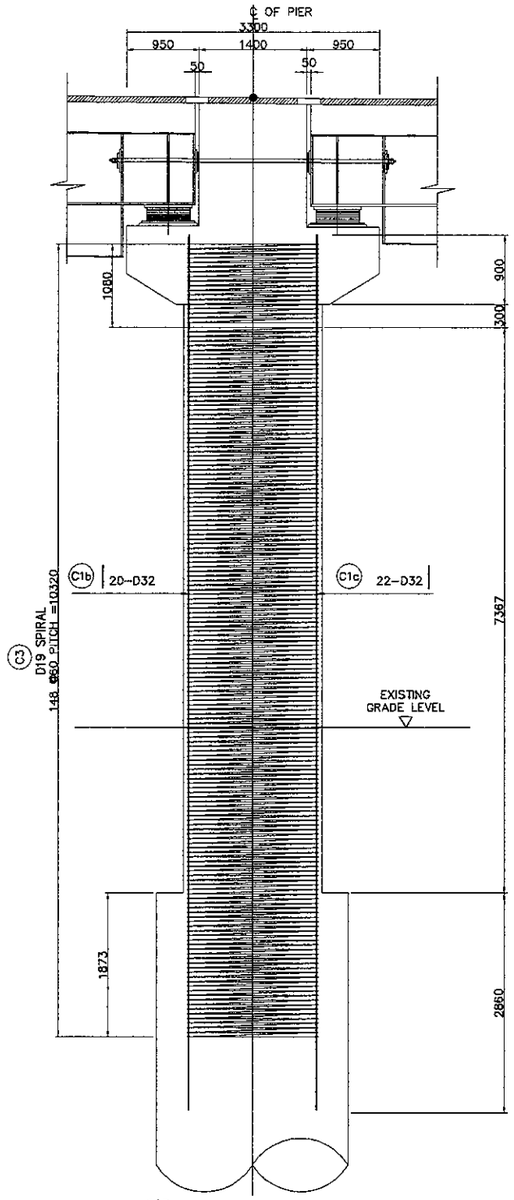

2 ELEVATION
SCALE 1:80

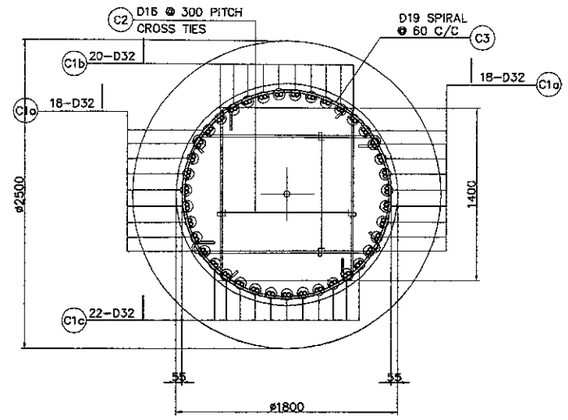

3 SECTION
SCALE 1:50

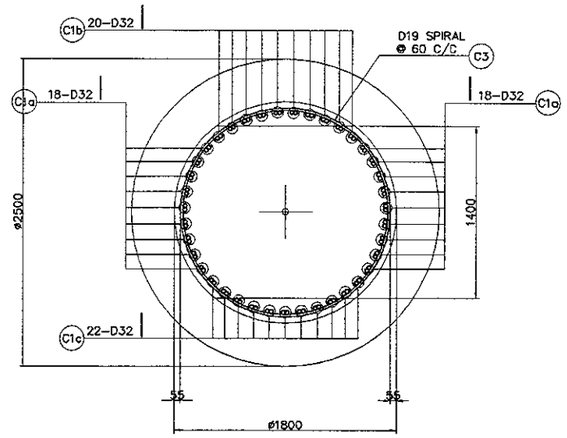

4 SECTION
SCALE 1:50

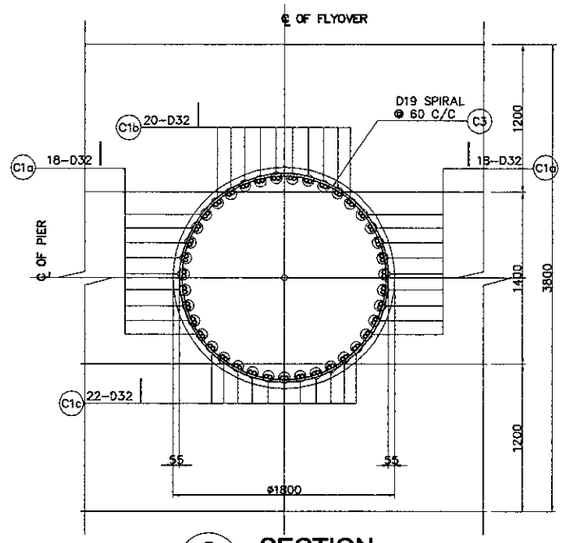

5 SECTION
SCALE 1:50

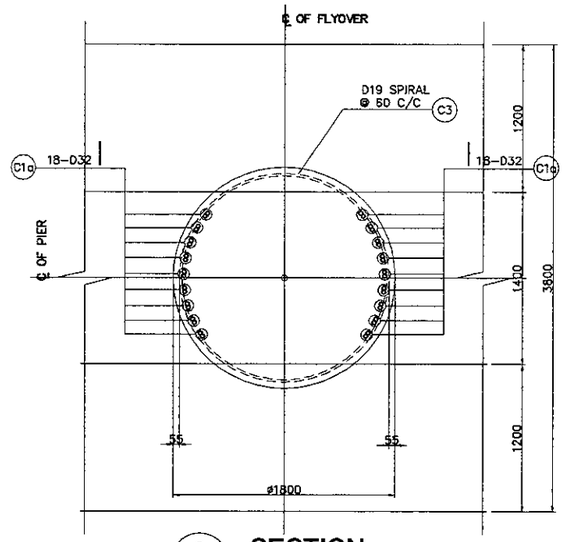

6 SECTION
SCALE 1:50

SCHEDULE OF PIER		
PIER NO.	HEIGHT H (mm)	A (mm)
P7	7367	10360

COLUMN TYPE		CL-GF04
SIZE (mm)		ø1800
MAIN BARS	SIZE (mm)	32
	NO. LAYERS	1
	NO. OF PCS.(a)	36
	NO. OF PCS.(b)	42
SPIRAL	SIZE (mm)	19

BAR BENDING DIAGRAM

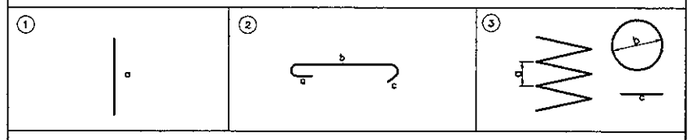

SCHEDULE OF REINFORCEMENT

LOCATION	BAR MARK	SIZE (mm)	BEND TYPE	DIMENSION(mm) OUT TO OUT a	b	c	d	e	f	LENGTH (mm)	NO. REQ'D.	UNIT WEIGHT (kg/m)	WEIGHT (kg)	VOLUME CONCRETE (m3)
COLUMN PIER 7	C1a	32	1	12895						12895	36	6.31	2929	18.712
	C1b	32	1	11425						11425	20	6.31	1442	
	C1c	32	1	11425						11425	22	6.31	1586	
	C2	16	2	130	1400	200				1730	58	1.56	151	
	C3	19	3	60	1690	500				951248	1	2.23	2121	
										TOTAL P7 =			8,229 Kgs	

THE SCHEDULE OF REINFORCEMENT SHOWN ON THIS TABLE IS FOR REFERENCE ONLY. THE CONTRACTOR SHOULD CHECKED AND VERIFY ALL DIMENSIONS, SIZES AND QUANTITIES OF REINFORCEMENT.

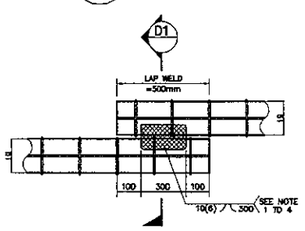

DIRECT LAP JOINT WITH BARS IN CONTACT

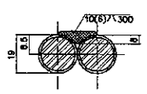

SECTION–D1
SINGLE FLARED–V–GROOVE WELD

D DETAIL OF SPIRAL REINF. FULL LAP–WELD CONNECTION
NOT TO SCALE

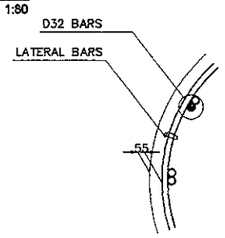

C TYPICAL BAR LAYOUT DETAIL
NOT TO SCALE

NOTES ON LAP–WELD CONNECTION :

1. SPIRAL REINFORCEMENT ARE LAP–WELD CONNECTED (FLARED–V–GROOVE TYPE)
2. WELDING SHOULD CONFORM TO AWS (D1.4) *STRUCTURAL WELDING CODE REINFORCED STEEL.*
3. USE ELECTRODE E90XX.
4. CARE SHOULD BE TAKEN NOT TO DAMAGE THE COLUMN MAIN BARS DURING WELDING.

NOTES :

1. ALL DIMENSIONS ARE IN MILLIMETERS
2. CONCRETE : fc' = 30 MPa
3. REINFORCING STEEL : YIELD STRENGTH = 390 N/mm2

PRINTED: OCT. 18, 2006

JAPAN INTERNATIONAL COOPERATION AGENCY KATAHIRA & ENGINEERS INTERNATIONAL	DESIGNED BY	CHECKED BY	SUBMITTED BY	REPUBLIC OF INDONESIA MINISTRY OF PUBLIC WORKS DIRECTORATE GENERAL OF HIGHWAYS	PROJECT AND LOCATION :	SCALE :	DRAWING TITLE :	DRAWING NO :
	Name: A. GOURLEY	Name: T. OKUMURA	Name: M. KIUCHI		DETAILED DESIGN STUDY OF NORTH JAVA CORRIDOR FLYOVER PROJECT GEBANG FLYOVER - CONTRACT PACKAGE 2 (NAGREG - GEBANG) WEST JAVA PROVINCE		SCHEDULE OF REINFORCED CONCRETE COLUMN	GSB-021
	Sign	Sign	Sign	APPROVED BY: Ir. HERRY VAZA M,Eng.Sc NIP. : 110038400		FULL SIZE A3		SHEET NO : 21 / 57
	Date	Date	Date	Sign / Date				

SCHEDULE OF COLUMN

CL-GF01

PIER P2, P3, P14 & P15

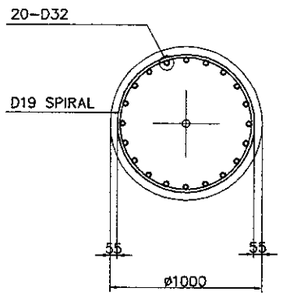

COLUMN TYPE		CL-GF01
SIZE (mm)		ø1000
MAIN BARS	SIZE (mm)	32
	NO. LAYERS	1
	NO. OF PCS.	20
SPIRAL	SIZE (mm)	19
STEEL RATIO, ρ		2 %

CL-GF02

PIER P1 & P13

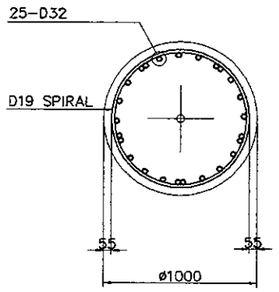

COLUMN TYPE		CL-GF02
SIZE (mm)		ø1000
MAIN BARS	SIZE (mm)	32
	NO. LAYERS	1
	NO. OF PCS.	25
SPIRAL	SIZE (mm)	19
STEEL RATIO, ρ		2.5%

CL-GF03

PIER P4 & P12

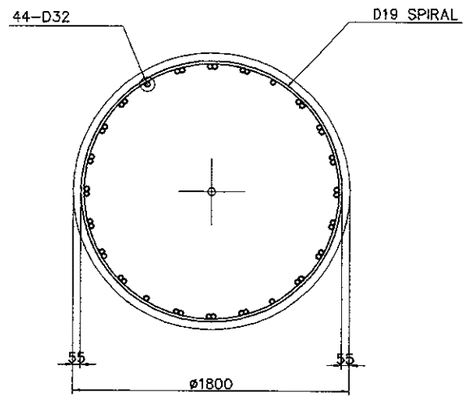

COLUMN TYPE		CL-GF03
SIZE (mm)		ø1800
MAIN BARS	SIZE (mm)	32
	NO. LAYERS	1
	NO. OF PCS.	44
SPIRAL	SIZE (mm)	19
STEEL RATIO, ρ		1.4 %

CL-GF04

PIER P7

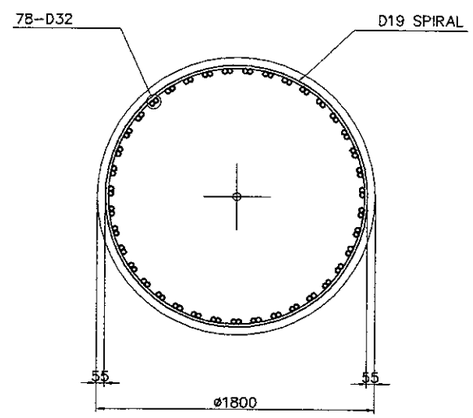

COLUMN TYPE		CL-GF04
SIZE (mm)		ø1800
MAIN BARS	SIZE (mm)	32
	NO. LAYERS	1
	NO. OF PCS.	78
SPIRAL	SIZE (mm)	19
STEEL RATIO, ρ		2.5 %

CL-GF05

PIER P5 & P6
PIER P8, P9, P10 & P11

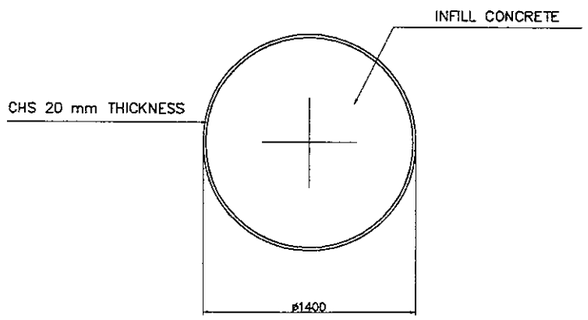

COLUMN TYPE : COMPOSITE COLUMN
SIZE (mm) : 1400

CL-GF06

ABUTMENT A1 & A2

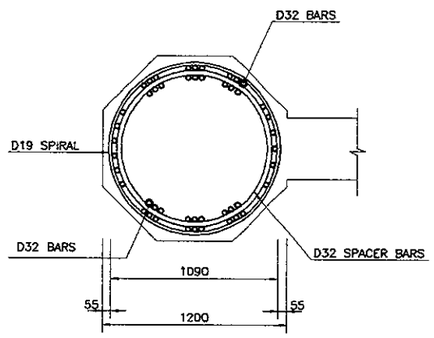

COLUMN TYPE		CL-GF06
SIZE (mm)		1200
MAIN BARS	SIZE (mm)	32
	NO. LAYERS	2
	NO. OF PCS (1)	30
	NO. OF PCS (2)	18
SPIRAL	SIZE (mm)	19
STEEL RATIO, ρ		3 %

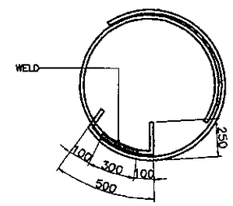

PLAN

NOTES :

1. LAP SPLICE OF COLUMN MAIN BARS WILL NOT BE ALLOWED IN ANY LOCATION.

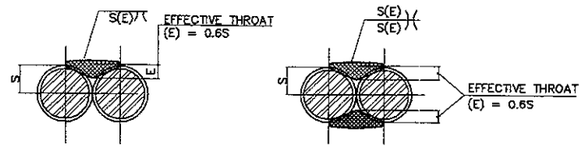

A. SINGLE B. DOUBLE

WHERE: S = RADIUS OF REINFORCING BAR
E = EFFECTIVE THROAT

SECTIONS

DETAILS OF LAP WELD SPLICE FOR SPIRAL

JAPAN INTERNATIONAL COOPERATION AGENCY KATAHIRA & ENGINEERS INTERNATIONAL	DESIGNED BY	CHECKED BY	SUBMITTED BY	REPUBLIC OF INDONESIA MINISTRY OF PUBLIC WORKS DIRECTORATE GENERAL OF HIGHWAYS	PROJECT AND LOCATION :	SCALE :	DRAWING TITLE :	DRAWING NO :
	Name: A. GOURLEY	Name: T. OKUMURA	Name: M. KIUCHI		DETAILED DESIGN STUDY OF NORTH JAVA CORRIDOR FLYOVER PROJECT GEBANG FLYOVER - CONTRACT PACKAGE 2 (NAGREG - GEBANG) WEST JAVA PROVINCE	1 : 40 1 : 50	PIER COPING REINFORCEMENT P4 (EXP.) (1 OF 4)	GSB-022
	Sign	Sign	Sign	APPROVED BY: Ir. HERRY VAZA M,Eng.Sc NIP. : 110038400				SHEET NO :
	Date	Date	Date	Sign / Date		FULL SIZE A3		22 / 57

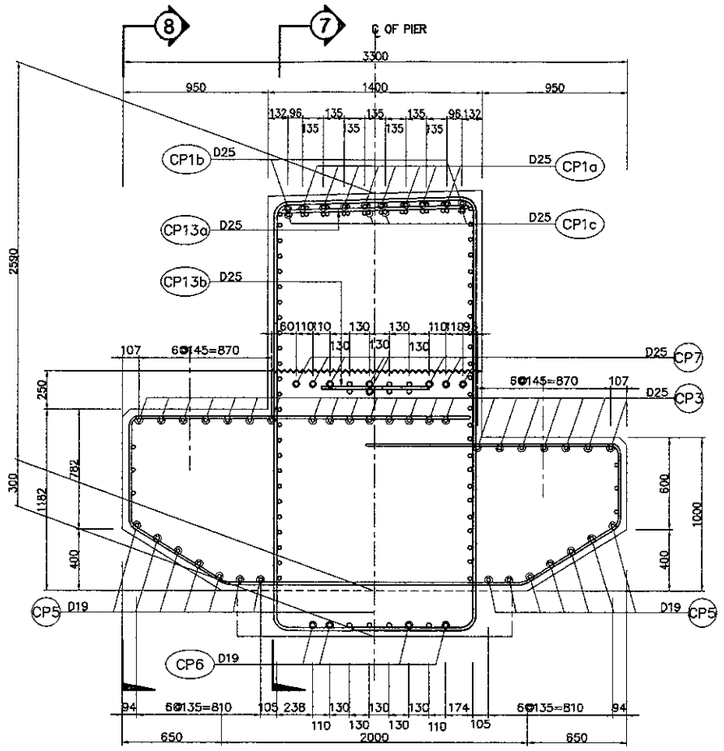

1 SECTION
SCALE 1:40

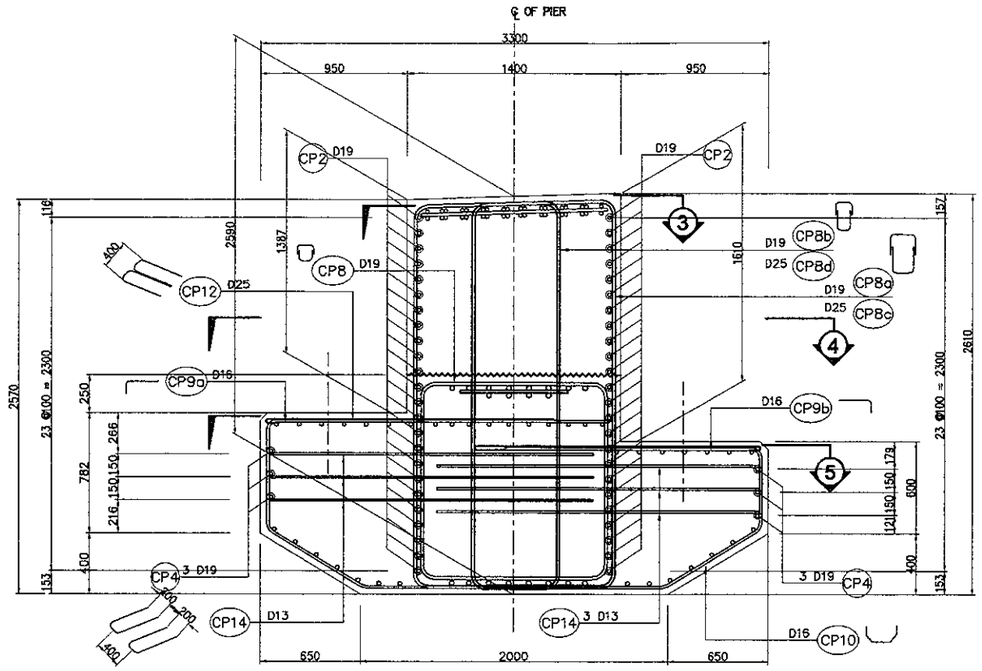

2 SECTION
SCALE 1:40

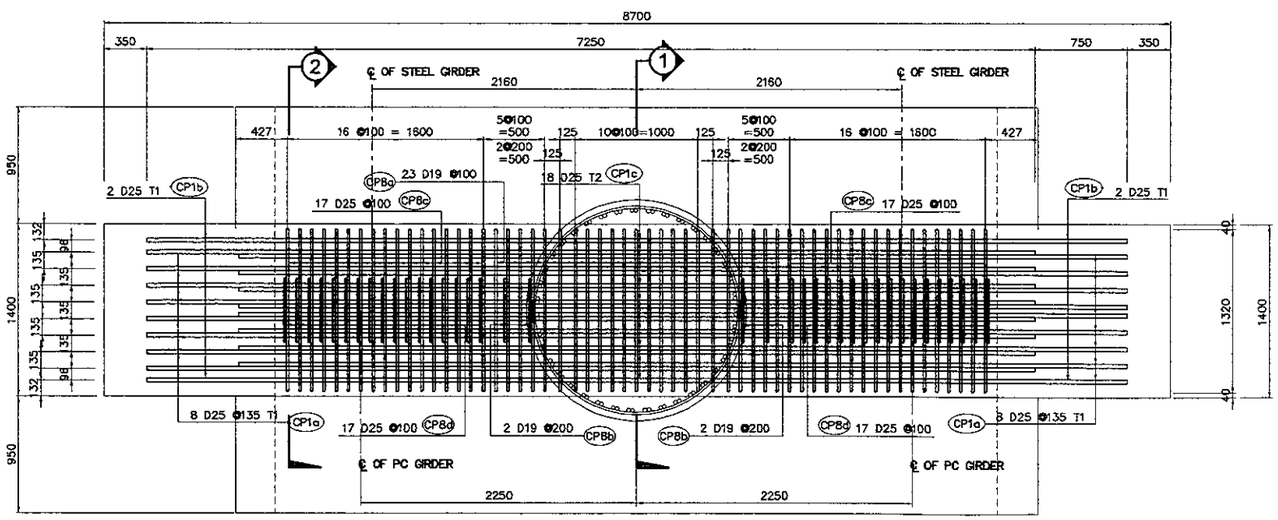

3 PLAN ON COPING TOP
SCALE 1:50

NOTES :
1. ALL DIMENSIONS ARE IN MILIMETERS.
2. CONCRETE : Fc' = 30MPa
3. REINFORCING STEEL=
   D51 : YIELD STRENGTH = 345 N/mm2
   OTHERS : YIELD STRENGTH = 390 N/mm2

PRINTED: OCT. 18, 2006

JAPAN INTERNATIONAL COOPERATION AGENCY / KATAHIRA & ENGINEERS INTERNATIONAL	DESIGNED BY	CHECKED BY	SUBMITTED BY	REPUBLIC OF INDONESIA MINISTRY OF PUBLIC WORKS DIRECTORATE GENERAL OF HIGHWAYS	PROJECT AND LOCATION :	SCALE :	DRAWING TITLE :	DRAWING NO :
	Name: A. GOURLEY	Name: T. OKUMURA	Name: M. KIUCHI		DETAILED DESIGN STUDY OF NORTH JAVA CORRIDOR FLYOVER PROJECT GEBANG FLYOVER - CONTRACT PACKAGE 2 (NAGREG - GEBANG) WEST JAVA PROVINCE	1 : 50	PIER COPING REINFORCEMENT P4 (EXP.) (2 OF 4)	GSB-023
	Sign	Sign	Sign	APPROVED BY: Ir. HERRY VAZA M,Eng.Sc NIP. : 110038400				SHEET NO :
	Date	Date	Date	Sign / Date		FULL SIZE A3		23 / 57

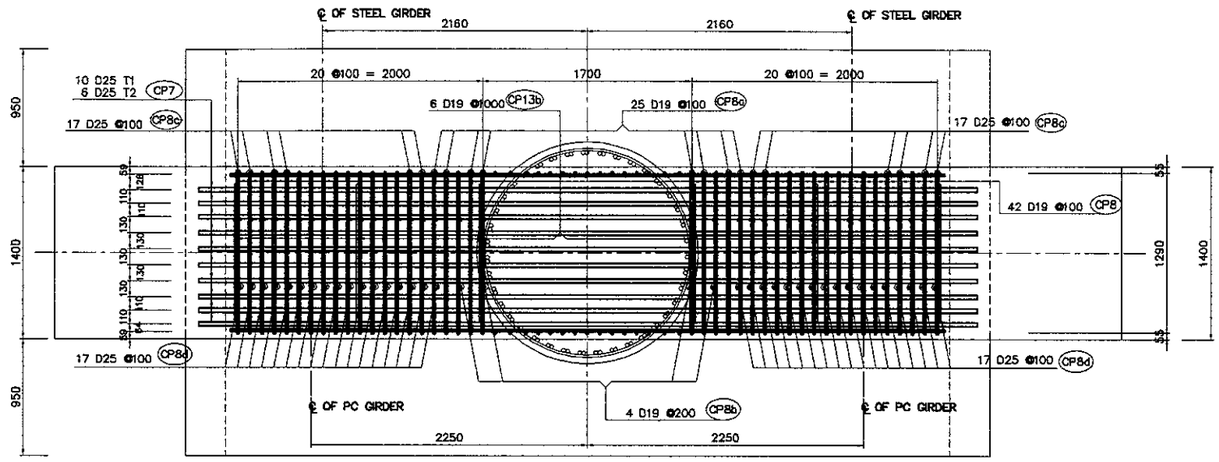

4 PLAN AT CONSTRUCTION JOINT

SCALE 1 : 50

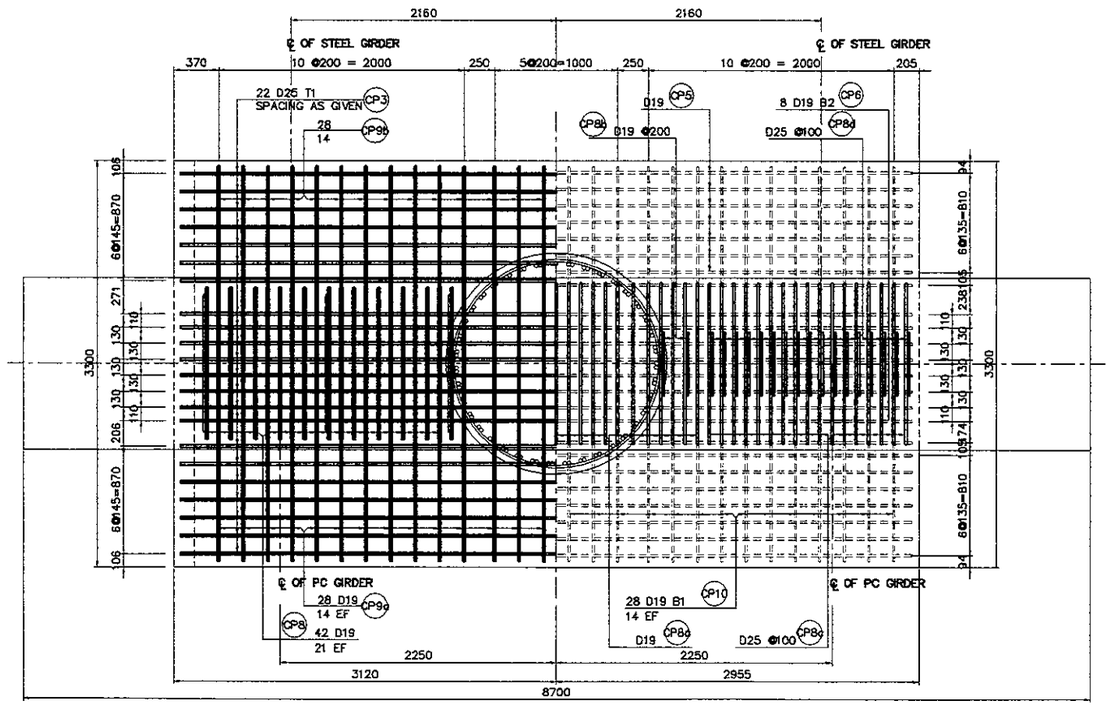

HALF SHOWING TOP

HALF SHOWING BASE

5 PLAN ON BEAM LEDGE

SCALE 1 : 50

NOTES :
1. ALL DIMENSIONS ARE IN MILIMETERS.
2. CONCRETE : Fc' = 30MPa
3. REINFORCING STEEL=
   D51 : YIELD STRENGTH = 345 N/mm2
   OTHERS : YIELD STRENGTH = 390 N/mm2

PRINTED: OCT. 18, 2006

JAPAN INTERNATIONAL COOPERATION AGENCY / KATAHIRA & ENGINEERS INTERNATIONAL	DESIGNED BY	CHECKED BY	SUBMITTED BY	REPUBLIC OF INDONESIA MINISTRY OF PUBLIC WORKS DIRECTORATE GENERAL OF HIGHWAYS	PROJECT AND LOCATION :	SCALE :	DRAWING TITLE :	DRAWING NO :
	Name A. GOURLEY	Name T. OKUMURA	Name M. KIUCHI		DETAILED DESIGN STUDY OF NORTH JAVA CORRIDOR FLYOVER PROJECT GEBANG FLYOVER - CONTRACT PACKAGE 2 (NAGREG - GEBANG) WEST JAVA PROVINCE	1 : 40 1 : 50	PIER COPING REINFORCEMENT P4 (EXP.) (3 OF 4)	GSB-024
	Sign	Sign	Sign	APPROVED BY Ir. HERRY VAZA M,Eng.Sc NIP. : 110038400 Sign				SHEET NO :
	Date	Date	Date	Date		FULL SIZE A3		24 / 57

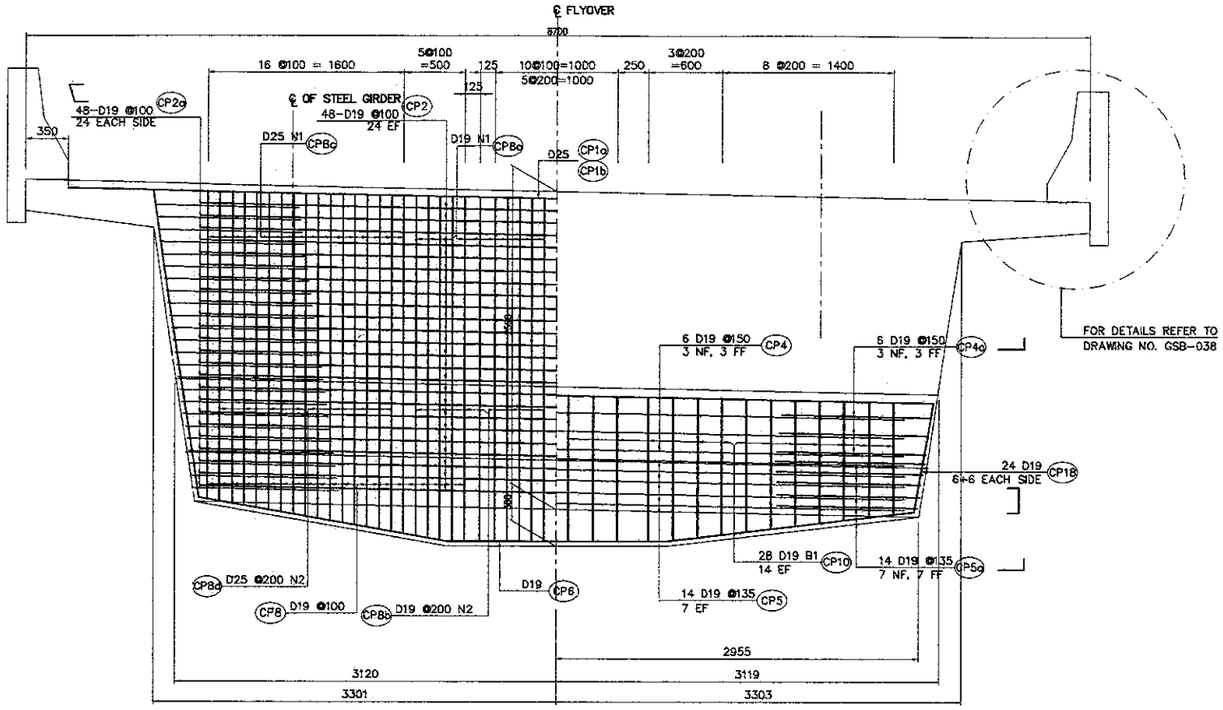

6 ELEVATION ON COPING
SCALE 1 : 50

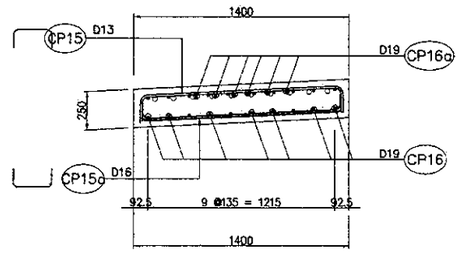

10 SECTION A-A
SCALE 1:40

7 ELEVATION ON BEAM LEDGE
SCALE 1 : 50

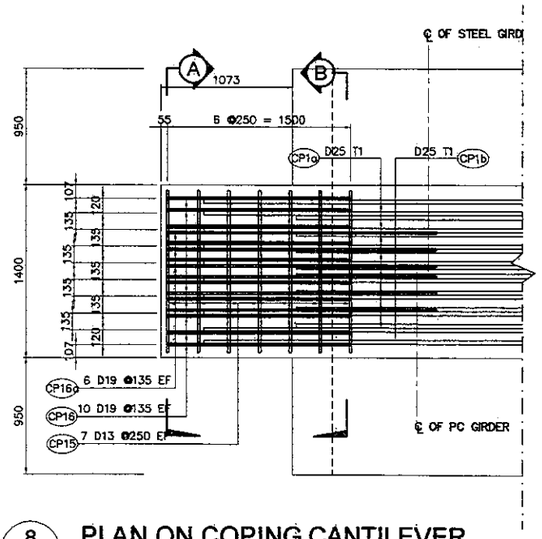

8 PLAN ON COPING CANTILEVER
SCALE 1 : 50

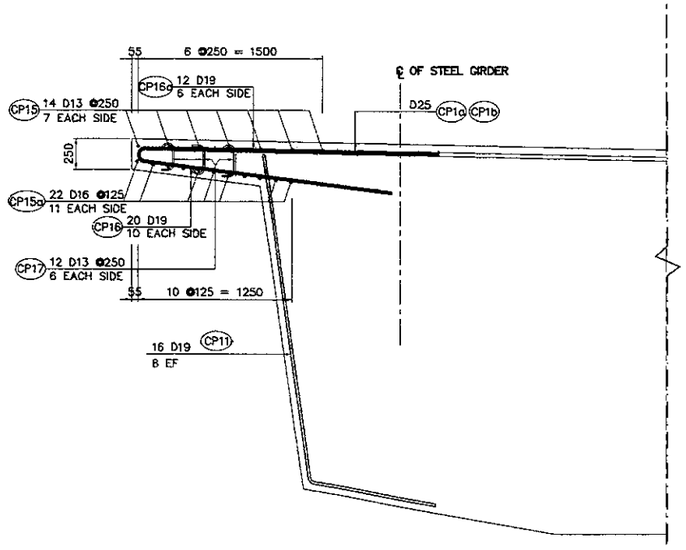

9 ELEVATION ON COPING CANTILEVER
SCALE 1 : 50

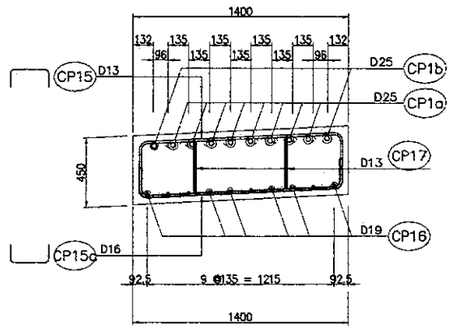

11 SECTION B-B
SCALE 1:40

NOTES :
1. ALL DIMENSIONS ARE IN MILIMETERS.
2. CONCRETE : Fc' = 30MPa
3. REINFORCING STEEL=
   D51 : YIELD STRENGTH = 345 N/mm2
   OTHERS : YIELD STRENGTH = 390 N/mm2

JICA JAPAN INTERNATIONAL COOPERATION AGENCY / KEI KATAHIRA & ENGINEERS INTERNATIONAL	DESIGNED BY	CHECKED BY	SUBMITTED BY	REPUBLIC OF INDONESIA MINISTRY OF PUBLIC WORKS DIRECTORATE GENERAL OF HIGHWAYS	PROJECT AND LOCATION :	SCALE :	DRAWING TITLE :	DRAWING NO :
	Name: A. GOURLEY	Name: T. OKUMURA	Name: M. KIUCHI	APPROVED BY: Ir. HERRY VAZA M.Eng.Sc	DETAILED DESIGN STUDY OF NORTH JAVA CORRIDOR FLYOVER PROJECT GEBANG FLYOVER - CONTRACT PACKAGE 2 (NAGREG - GEBANG) WEST JAVA PROVINCE	1 : 50	PIER COPING REINFORCEMENT P4 (EXP.) (4 OF 4)	GSB-025
	Sign	Sign	Sign	Sign				SHEET NO :
	Date	Date	Date	NIP. : 110038400 / Date		FULL SIZE A3		25 / 57

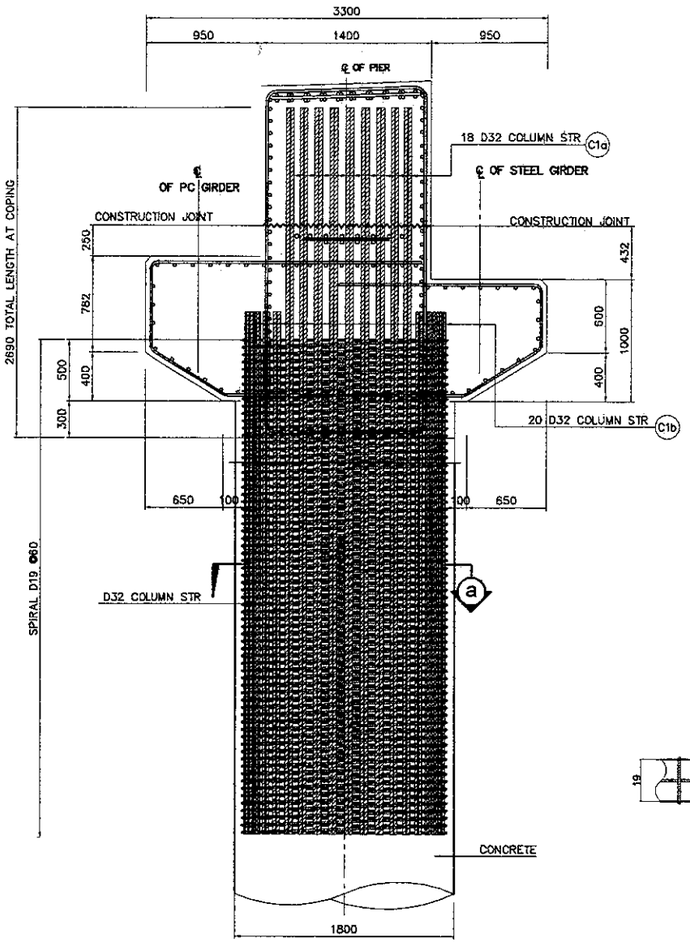

A ELEVATION
SCALE 1:50

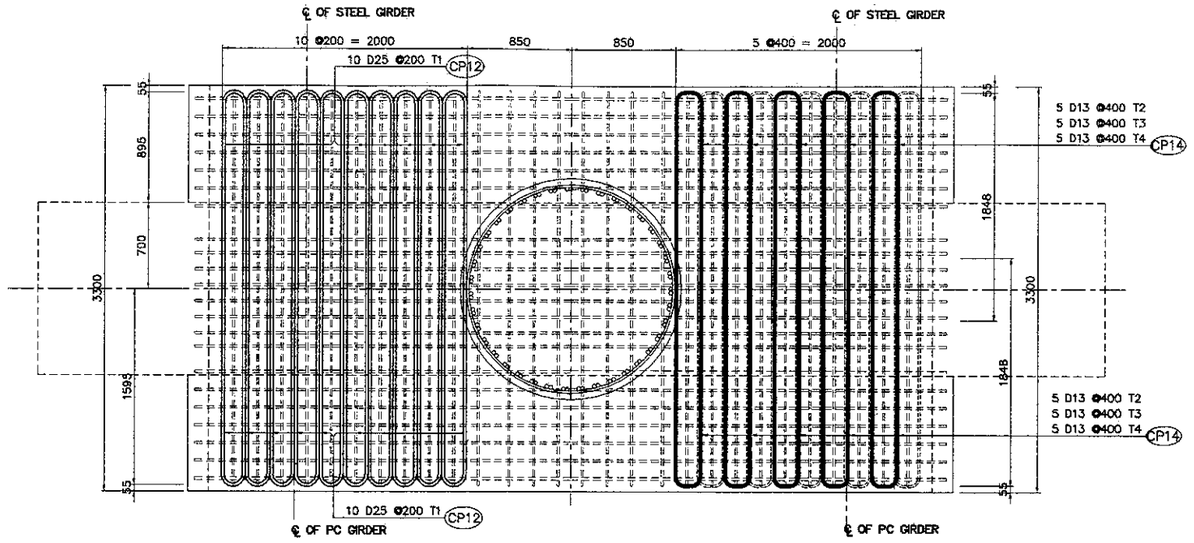

B STIRRUP PLACING
SCALE 1:50

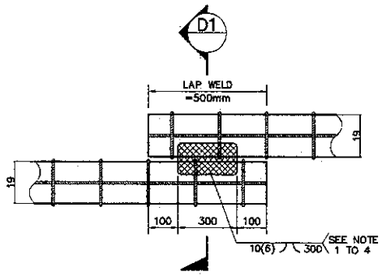

DIRECT LAP JOINT WITH IN CONTACT

D DETAIL OF SPIRAL REINF. FULL LAP-WELD CONNECTION
NOT TO SCALE

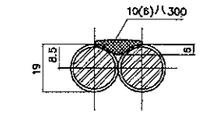

SECTION–D1
SINGLE FLARED–V–GROOVE WELD

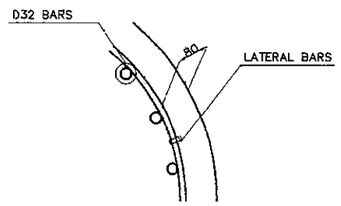

E TYPICAL BAR LAYOUT DETAIL
NOT TO SCALE

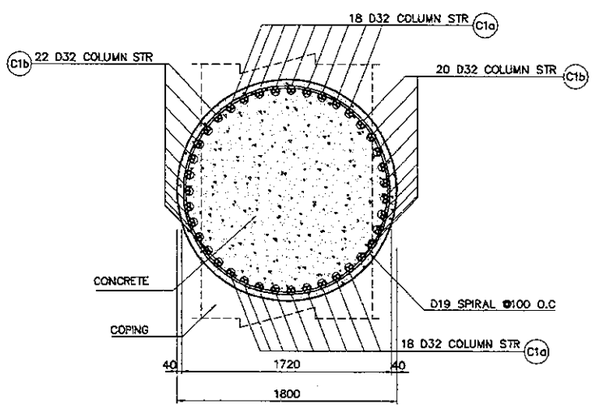

a-a

C SECTION DETAIL
SCALE 1:50

NOTES ON LAP-WELD CONNECTION :
1. SPIRAL REINFORCEMENT ARE LAP-WELD CONNECTED (FLARED-V-GROOVE TYPE)
2. WELDING SHOULD CONFORM TO AWS (D1.4) "STRUCTURAL WELDING CODE REINFORCED STEEL"
3. USE ELECTRODE E90XX.
4. CARE SHOULD BE TAKEN NOT TO DAMAGE THE COLUMN MAIN DURING WELDING.

NOTES :
1. ALL DIMENSIONS ARE IN MILIMETERS.
2. CONCRETE : fc' = 30MPa
3. REINFORCING STEEL=
   D51 : YIELD STRENGTH = 345 N/mm2
   OTHERS : YIELD STRENGTH = 390 N/mm2

BAR BENDING DIAGRAM

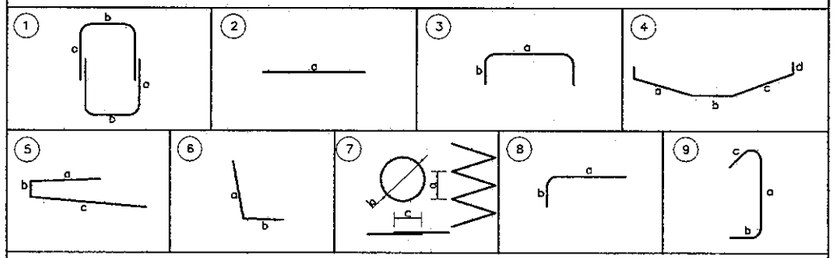

SCHEDULE OF REINFORCEMENT

LOCATION	BAR MARK	SIZE (mm)	BEND TYPE	DIMENSION (mm) OUT TO OUT a	b	c	d	e	f	LENGTH (mm)	NO. REQ'D.	UNIT WEIGHT (kg/m.)	WEIGHT (kg.)	VOLUME OF CONCRETE (m3)
COPING PIER 4	COPING													36.84
	CP1a	25	2	7250						7250	16	3.85	447	
	CP1b	25	2	8000						8000	2	3.85	62	
	CP1c	25	2	6500						6500	18	3.85	450	
	CP2	19	2	5850						5850	48	2.23	626	
	CP2d	19	3	1280	1250					3780	48	2.23	405	
	CP3	25	2	6000						6000	22	3.85	508	
	CP4	19	2	5650						5650	6	2.23	76	
	CP4a	19	8	1580	800					2380	12	2.23	64	
	CP5	19	2	5650						5650	14	2.23	176	
	CP5a	19	8	1345	800					2145	28	2.23	134	
	CP6	19	4	1917	1690	1917				6124	8	2.23	109	
	CP7	25	2	5800						5800	16	3.85	357	
	CP8	19	1	1290	1225	1200				7430	42	2.23	696	
	CP8a	19	1	2660	1300	800				9520	23	2.23	488	
	CP8b	19	1	2660	600	800				8120	4	2.23	72	
	CP8c	25	1	2660	1300	1150				10220	34	3.85	1338	
	CP8d	25	1	2660	600	1150				8820	34	3.85	1155	
	CP9a	19	8	2150	650					3450	28	2.23	215	
	CP9b	19	8	1665	510					2685	28	2.23	168	
	CP10	19	4	725	1965	725	515			4445	28	2.23	278	
	CP11	19	6	2645	1000					3645	16	2.23	130	
	CP12	25	3	200	1800					3800	40	3.85	585	
	CP13a	25	2	1200						1200	6	3.85	28	
	CP13b	25	2	700						700	6	3.85	16	
	CP14	13	3	200	1800					3800	60	1.04	237	
	CP15	13	3	1300	200					1700	14	1.04	25	
	CP15a	16	3	1300	350					2000	22	1.58	70	
	CP16	19	5	1500	165	2000				3665	20	2.23	164	
	CP16a	19	5	1500	165	165				1830	12	2.23	49	
	CP17	13	9	350	165	165				680	12	1.04	8	
	CP18	19	5	400	890	400				1690	24	2.23	91	
										TOTAL WEIGHT FOR / COPING = 8,737 Kgs.				

THE REINFORCEMENT SHOWN ON THIS TABLE IS FOR REFERENCE ONLY, THE CONTRACTOR SHOULD CHECKED AND VERIFY ALL DIMENSIONS, SIZES AND QUANTITIES OF REINFORCEMENT.

JAPAN INTERNATIONAL COOPERATION AGENCY KATAHIRA & ENGINEERS INTERNATIONAL	DESIGNED BY	CHECKED BY	SUBMITTED BY	REPUBLIC OF INDONESIA MINISTRY OF PUBLIC WORKS DIRECTORATE GENERAL OF HIGHWAYS	PROJECT AND LOCATION :	SCALE :	DRAWING TITLE :	DRAWING NO :
	Name A. GOURLEY	Name T. OKUMURA	Name M. KIUCHI		DETAILED DESIGN STUDY OF NORTH JAVA CORRIDOR FLYOVER PROJECT GEBANG FLYOVER - CONTRACT PACKAGE 2 (NAGREG - GEBANG) WEST JAVA PROVINCE	1 : 40 1 : 50	PIER COPING REINFORCEMENT P7 (EXP.) (1 OF 4)	GSB-026
	Sign	Sign	Sign	APPROVED BY Ir. HERRY VAZA M,Eng.Sc				SHEET NO :
	Date	Date	Date	NIP. : 110038400 Sign / Date		FULL SIZE A3		26 / 57

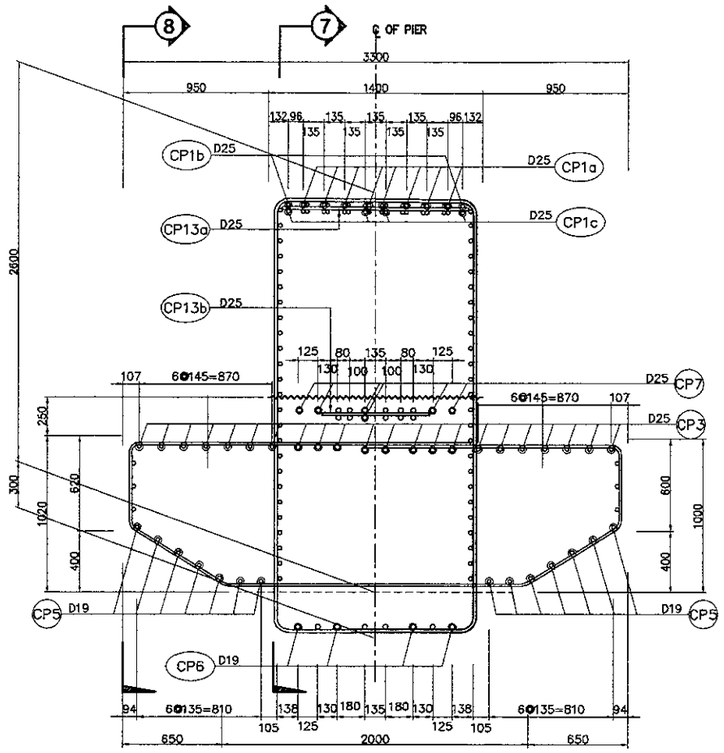

1 SECTION
SCALE 1:40

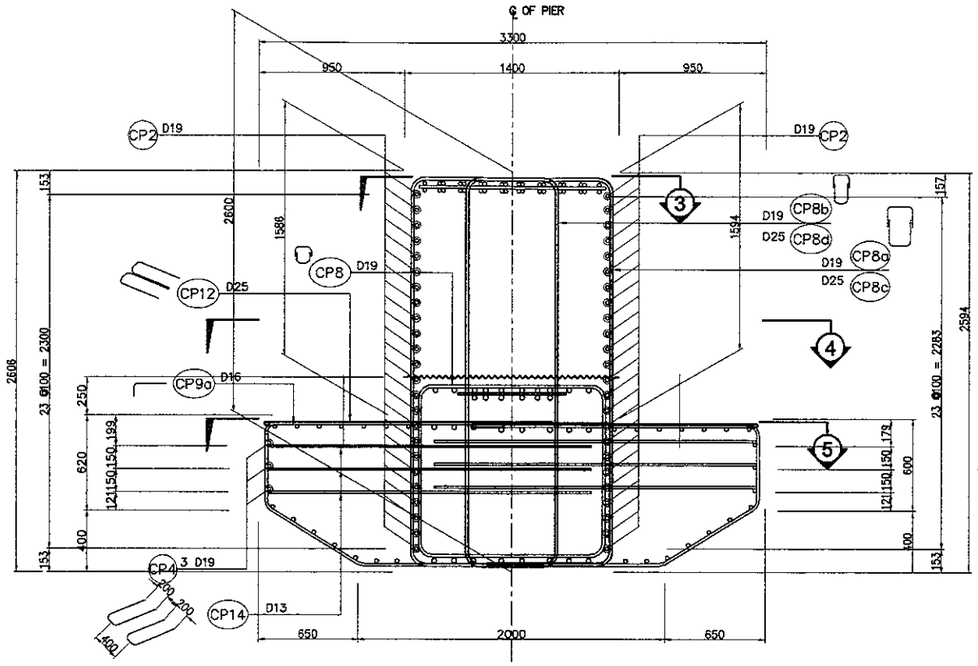

2 SECTION
SCALE 1:40

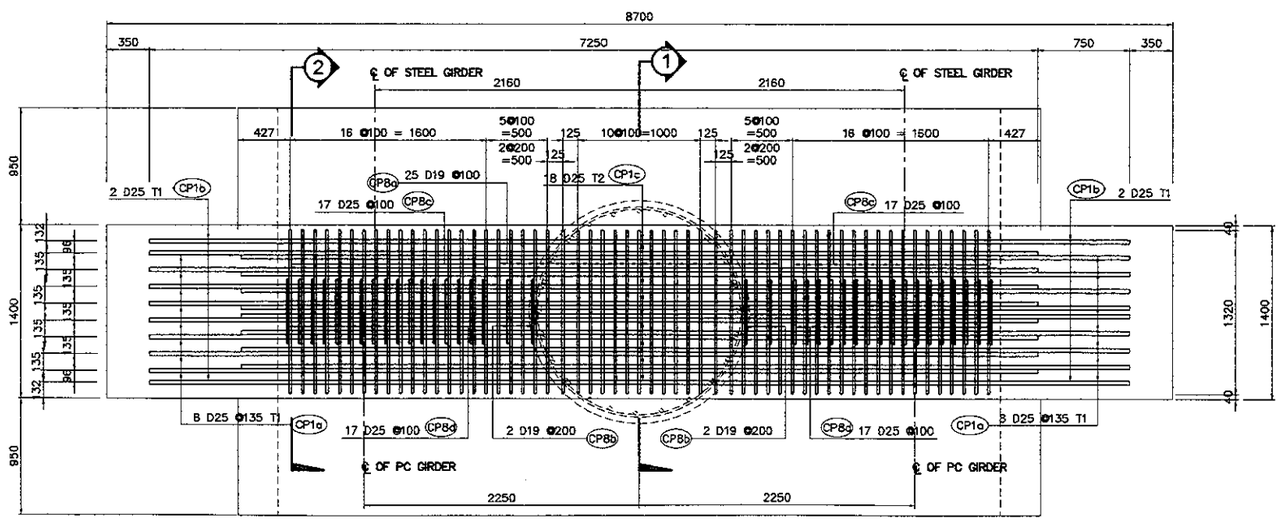

3 PLAN ON COPING TOP
SCALE 1:50

NOTES :
1. ALL DIMENSIONS ARE IN MILIMETERS.
2. CONCRETE : fc' = 30MPa
3. REINFORCING STEEL=
   D51 : YIELD STRENGTH = 345 N/mm2
   OTHERS : YIELD STRENGTH = 390 N/mm2

PRINTED: OCT. 18, 2006

JAPAN INTERNATIONAL COOPERATION AGENCY / KATAHIRA & ENGINEERS INTERNATIONAL	DESIGNED BY	CHECKED BY	SUBMITTED BY	REPUBLIC OF INDONESIA MINISTRY OF PUBLIC WORKS DIRECTORATE GENERAL OF HIGHWAYS	PROJECT AND LOCATION :	SCALE :	DRAWING TITLE :	DRAWING NO :
	Name: A. GOURLEY	Name: T. OKUMURA	Name: M. KIUCHI		DETAILED DESIGN STUDY OF NORTH JAVA CORRIDOR FLYOVER PROJECT GEBANG FLYOVER - CONTRACT PACKAGE 2 (NAGREG - GEBANG) WEST JAVA PROVINCE	1 : 50	PIER COPING REINFORCEMENT P7 (EXP.) (2 OF 4)	GSB-027
	Sign	Sign	Sign	APPROVED BY: Ir. HERRY VAZA M,Eng.Sc				SHEET NO :
	Date	Date	Date	NIP. : 110038400 / Sign / Date		FULL SIZE A3		27 / 57

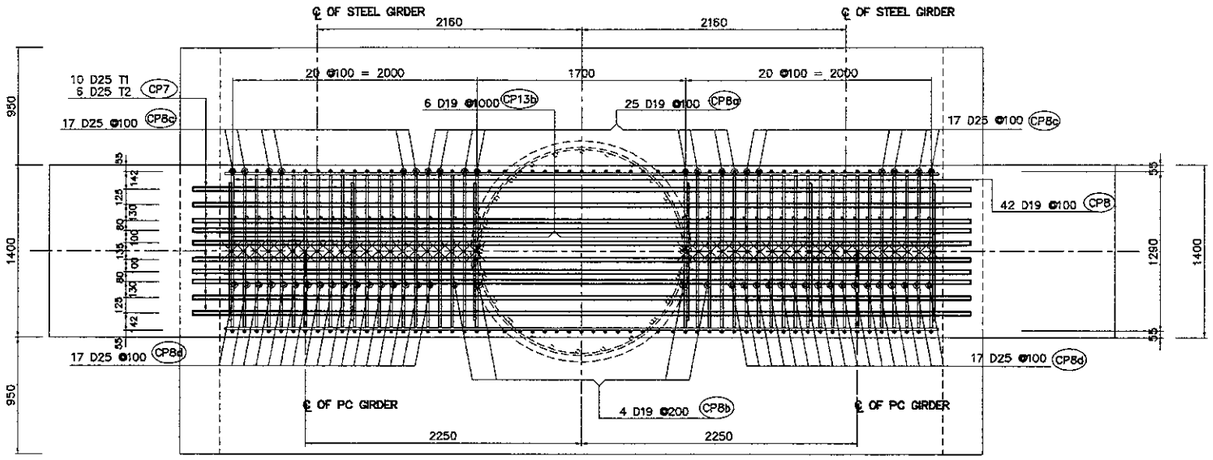

4 PLAN AT CONSTRUCTION JOINT

SCALE 1 : 50

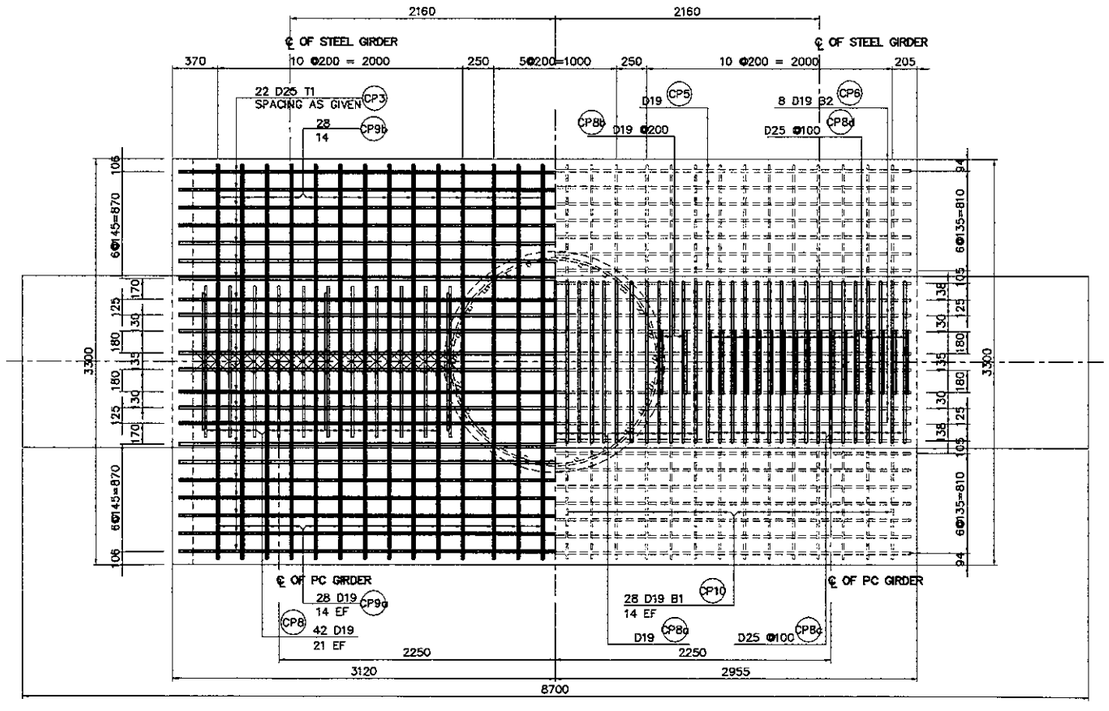

HALF SHOWING TOP

HALF SHOWING BASE

5 PLAN ON BEAM LEDGE

SCALE 1 : 50

NOTES :
1. ALL DIMENSIONS ARE IN MILIMETERS.
2. CONCRETE : fc' = 30MPa
3. REINFORCING STEEL=
   D51 : YIELD STRENGTH = 345 N/mm2
   OTHERS : YIELD STRENGTH = 390 N/mm2

JAPAN INTERNATIONAL COOPERATION AGENCY KATAHIRA & ENGINEERS INTERNATIONAL	DESIGNED BY	CHECKED BY	SUBMITTED BY	REPUBLIC OF INDONESIA MINISTRY OF PUBLIC WORKS DIRECTORATE GENERAL OF HIGHWAYS	PROJECT AND LOCATION :	SCALE :	DRAWING TITLE :	DRAWING NO :
	Name: A. GOURLEY	Name: T. OKUMURA	Name: M. KIUCHI		DETAILED DESIGN STUDY OF NORTH JAVA CORRIDOR FLYOVER PROJECT GEBANG FLYOVER - CONTRACT PACKAGE 2 (NAGREG - GEBANG) WEST JAVA PROVINCE	1 : 40 1 : 50	PIER COPING REINFORCEMENT P7 (EXP.) (3 OF 4)	GSB-028
	Sign	Sign	Sign	APPROVED BY: Ir. HERRY VAZA M,Eng.Sc NIP. : 110038400				SHEET NO :
	Date	Date	Date	Sign / Date		FULL SIZE A3		28 / 57

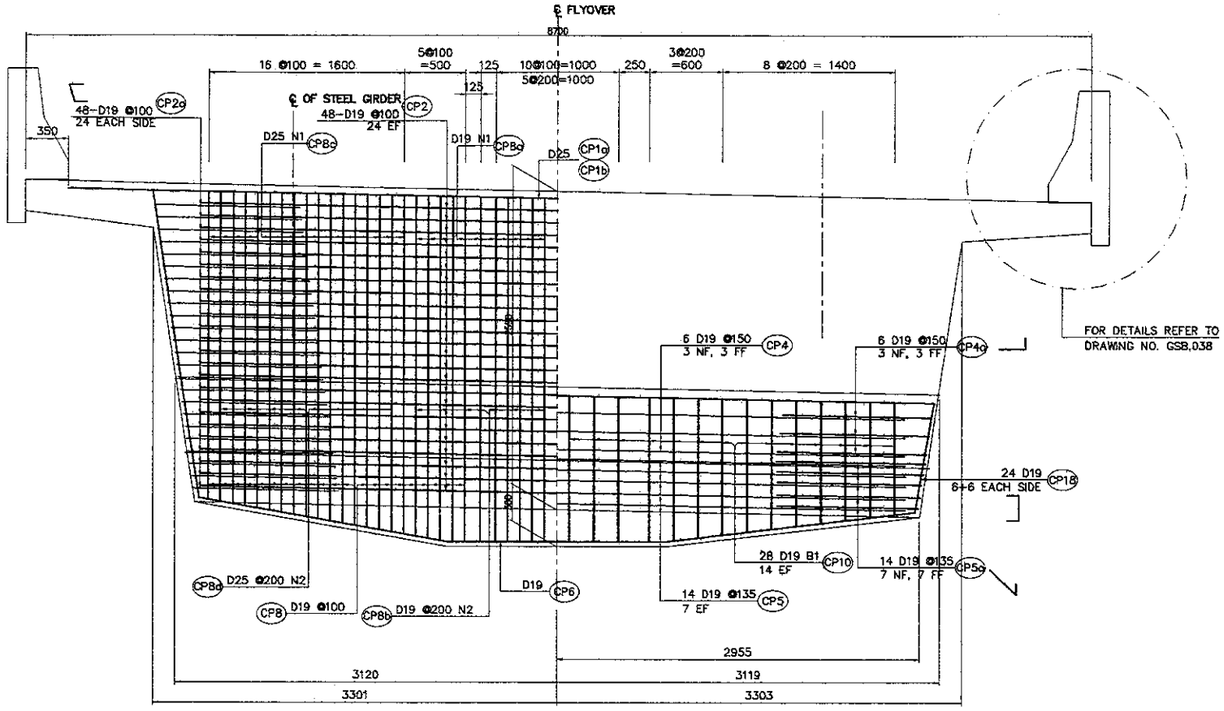

6 ELEVATION ON COPING
SCALE 1 : 50

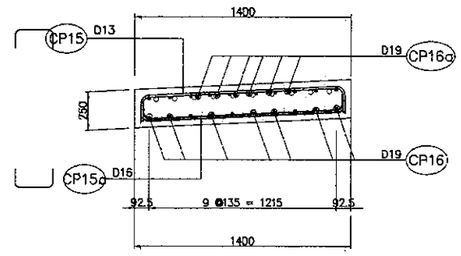

10 SECTION A-A
SCALE 1:40

7 ELEVATION ON BEAM LEDGE
SCALE 1 : 50

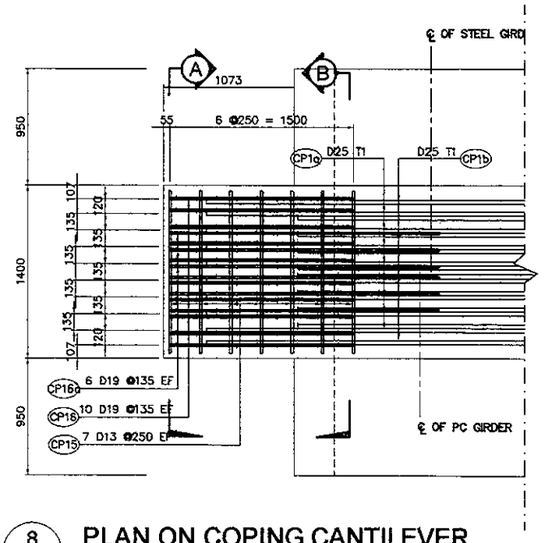

8 PLAN ON COPING CANTILEVER
SCALE 1 : 50

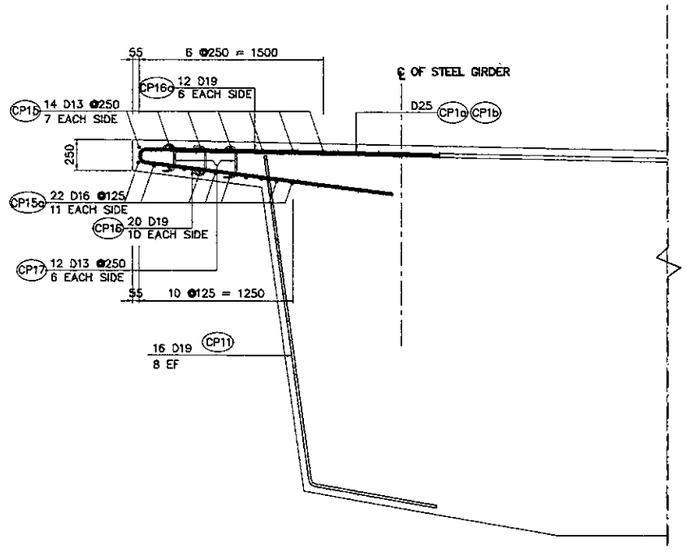

9 ELEVATION ON COPING CANTILEVER
SCALE 1 : 50

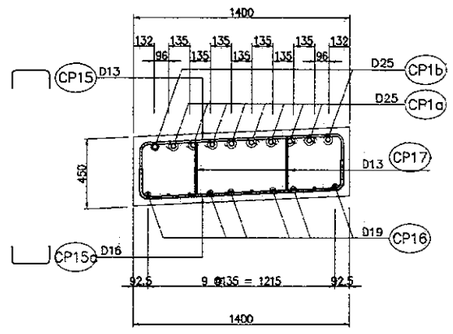

11 SECTION B-B
SCALE 1:40

NOTES :
1. ALL DIMENSIONS ARE IN MILIMETERS.
2. CONCRETE : fc' = 30MPa
3. REINFORCING STEEL=
   D51 : YIELD STRENGTH = 345 N/mm2
   OTHERS : YIELD STRENGTH = 390 N/mm2

PRINTED: NOV. 02, 2006

JAPAN INTERNATIONAL COOPERATION AGENCY KATAHIRA & ENGINEERS INTERNATIONAL	DESIGNED BY	CHECKED BY	SUBMITTED BY	REPUBLIC OF INDONESIA MINISTRY OF PUBLIC WORKS DIRECTORATE GENERAL OF HIGHWAYS	PROJECT AND LOCATION :	SCALE :	DRAWING TITLE :	DRAWING NO :
	Name A. GOURLEY	Name T. OKUMURA	Name M. KIUCHI		DETAILED DESIGN STUDY OF NORTH JAVA CORRIDOR FLYOVER PROJECT GEBANG FLYOVER - CONTRACT PACKAGE 2 (NAGREG - GEBANG) WEST JAVA PROVINCE	1 : 50	PIER COPING REINFORCEMENT P7 (EXP.) (4 OF 4)	GSB-029
	Sign	Sign	Sign	APPROVED BY Ir. HERRY VAZA M.Eng.Sc NIP. : 110038400 Sign				SHEET NO :
	Date	Date	Date	Date		FULL SIZE A3		29 / 57

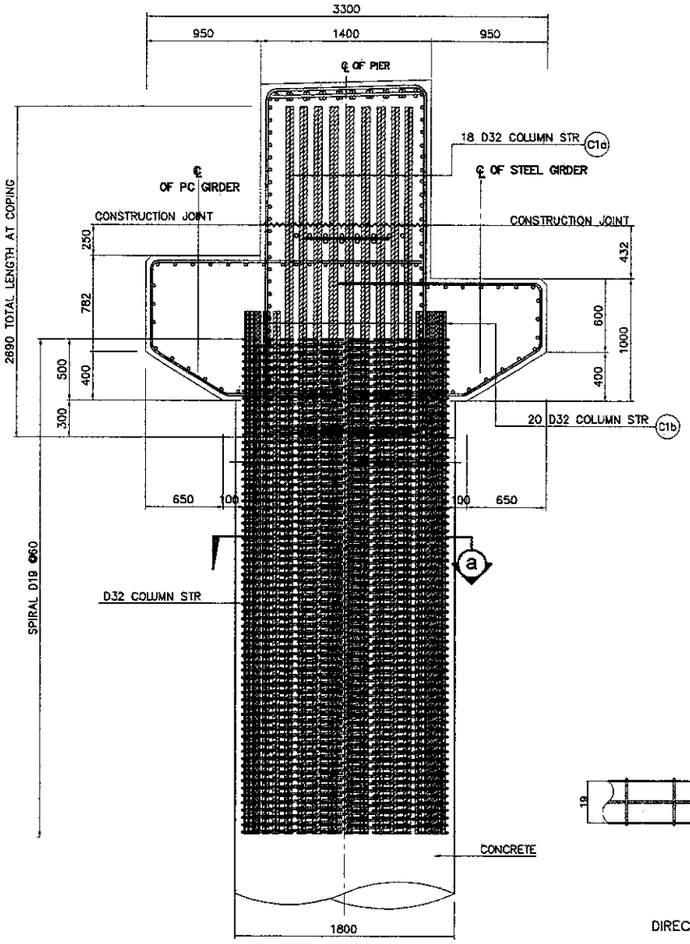

A ELEVATION
SCALE 1:50

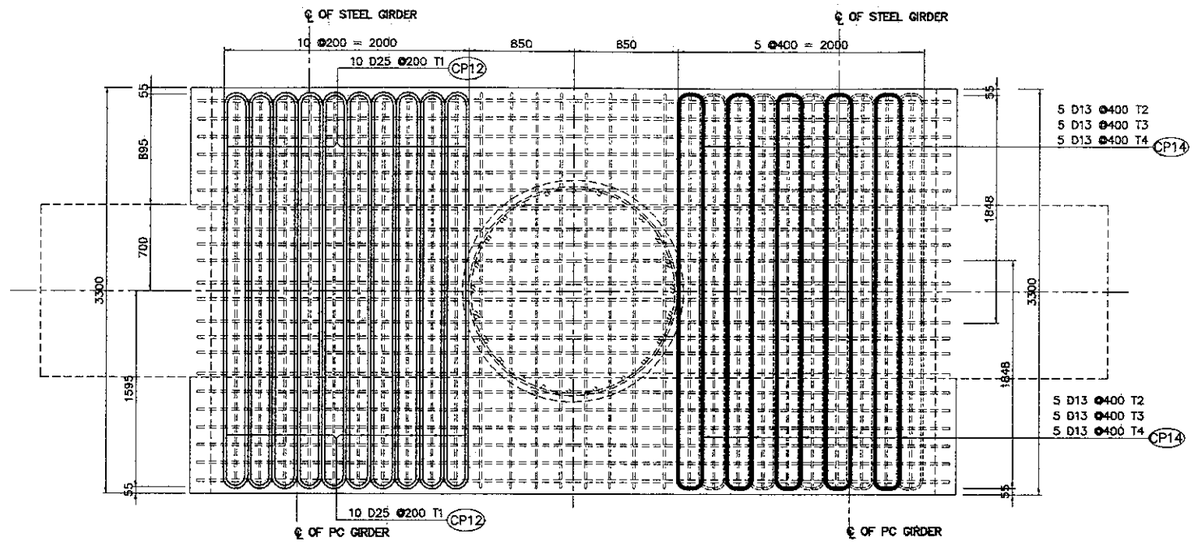

B STIRRUP PLACING
SCALE 1:50

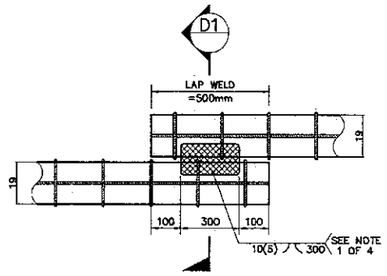

DIRECT LAP JOINT WITH IN CONTACT

D DETAIL OF SPIRAL REINF.
FULL LAP-WELD CONNECTION
NOT TO SCALE

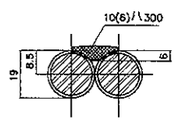

SECTION–D1
SINGLE FLARED–V–GROOVE WELD

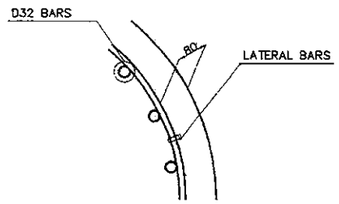

E TYPICAL BAR
LAYOUT DETAIL
NOT TO SCALE

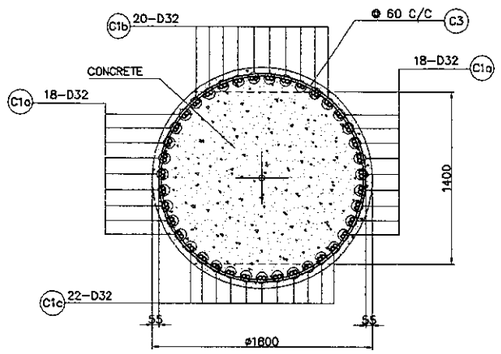

a-a

C SECTION DETAIL
SCALE 1:50

NOTES ON LAP–WELD CONNECTION :
1. SPIRAL REINFORCEMENT ARE LAP–WELD CONNECTED (FLARED–V–GROOVE TYPE)
2. WELDING SHOULD CONFORM TO AWS (D1.4) *STRUCTURAL WELDING CODE REINFORCED STEEL.*
3. USE ELECTRODE E90XX.
4. CARE SHOULD BE TAKEN NOT TO DAMAGE THE COLUMN MAIN DURING WELDING.

NOTES :
1. ALL DIMENSIONS ARE IN MILIMETERS.
2. CONCRETE : fc' = 30MPa
3. REINFORCING STEEL=
   D51 : YIELD STRENGTH = 345 N/mm2
   OTHERS : YIELD STRENGTH = 390 N/mm2

BAR BENDING DIAGRAM

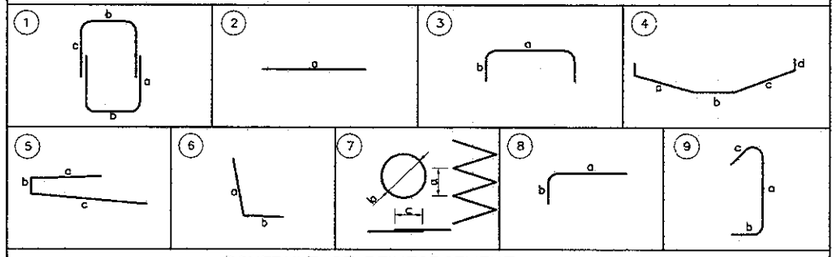

SCHEDULE OF REINFORCEMENT

LOCATION	BAR MARK	SIZE (mm)	BEND TYPE	DIMENSION (mm) OUT TO OUT a	b	c	d	e	f	LENGTH (mm)	NO. REQ'D.	UNIT WEIGHT (kg/m.)	WEIGHT (kg.)	VOLUME OF CONCRETE (m3)
COPING PIER 7	COPING													34.916
	CP1a	25	2	7250						7250	18	3.85	502	
	CP1b	25	2	8000						8000	2	3.85	62	
	CP1c	25	2	6500						6500	18	3.85	450	
	CP2	19	2	5850						5850	48	2.23	626	
	CP2a	19	3	1280	1250					3780	48	2.23	405	
	CP3	25	2	6000						6000	22	3.85	508	
	CP4	19	2	5650						5650	6	2.23	76	
	CP4a	19	8	1580	800					2380	12	2.23	64	
	CP5	19	2	5650						5650	14	2.23	176	
	CP5a	19	8	1345	800					2145	28	2.23	134	
	CP6	19	4	1917	1790	1917				6124	8	2.23	109	
	CP7	25	2	5800						5800	16	3.85	357	
	CP8	19	1	1122	1225	1200				7094	42	2.23	664	
	CP8a	19	1	2525	1300	800				9250	25	2.23	460	
	CP8b	19	1	2525	600	800				7850	4	2.23	70	
	CP8c	25	1	2525	1300	1150				9250	34	3.85	1211	
	CP8d	25	1	2525	600	1150				7850	34	3.85	1027	
	CP9a	19	8	2150	650					3450	28	2.23	215	
	CP9b	19	8	1665	510					2685	28	2.23	168	
	CP10	19	4	850	1885	870	515			4635	28	2.23	289	
	CP11	19	6	2645	1000					3645	16	2.23	130	
	CP12	25	3	200	1800					3800	40	3.85	585	
	CP13a	25	2	1200						1200	6	3.85	28	
	CP13b	25	2	700						700	6	3.85	16	
	CP14	13	3	200	1800					3800	60	1.04	237	
	CP15	13	3	1300	200					1700	14	1.04	25	
	CP15d	16	3	1300	350					2000	22	1.58	70	
	CP16	19	5	1500	165	2000				3665	20	2.23	164	
	CP16a	19	5	1500	165	165				1830	12	2.23	49	
	CP17	13	9	350	165	165				680	12	1.04	8	
	CP18	19	5	400	890	400				1690	24	2.23	91	
										TOTAL WEIGHT FOR / COPING = 8,976 Kgs.				

THE REINFORCEMENT SHOWN ON THIS TABLE IS FOR REFERENCE ONLY, THE CONTRACTOR SHOULD CHECKED AND VERIFY ALL DIMENSIONS, SIZES AND QUANTITIES OF REINFORCEMENT.

PRINTED: NOV. 02, 2006

JAPAN INTERNATIONAL COOPERATION AGENCY KATAHIRA & ENGINEERS INTERNATIONAL	DESIGNED BY	CHECKED BY	SUBMITTED BY	REPUBLIC OF INDONESIA MINISTRY OF PUBLIC WORKS DIRECTORATE GENERAL OF HIGHWAYS	PROJECT AND LOCATION :	SCALE :	DRAWING TITLE :	DRAWING NO :
	Name A. GOURLEY	Name T. OKUMURA	Name M. KIUCHI		DETAILED DESIGN STUDY OF NORTH JAVA CORRIDOR FLYOVER PROJECT GEBANG FLYOVER - CONTRACT PACKAGE 2 (NAGREG - GEBANG) WEST JAVA PROVINCE	1 : 40 1 : 50	PIER COPING REINFORCEMENT P12 (EXP.) (1 OF 4)	GSB-030
	Sign	Sign	Sign	APPROVED BY ir. HERRY VAZA M,Eng.Sc NIP. : 110038400 Sign				SHEET NO :
	Date	Date	Date	Date		FULL SIZE A3		30 / 57

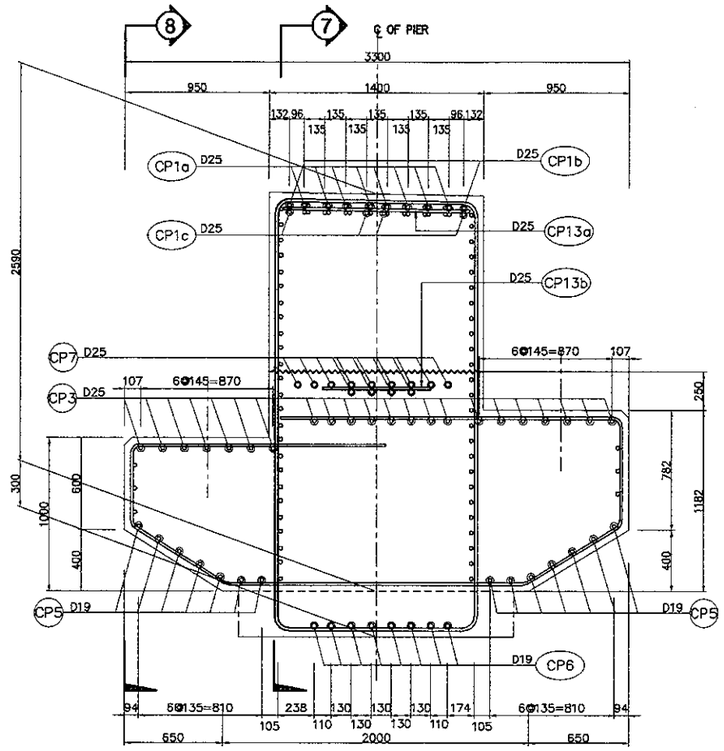

1 SECTION
SCALE 1:40

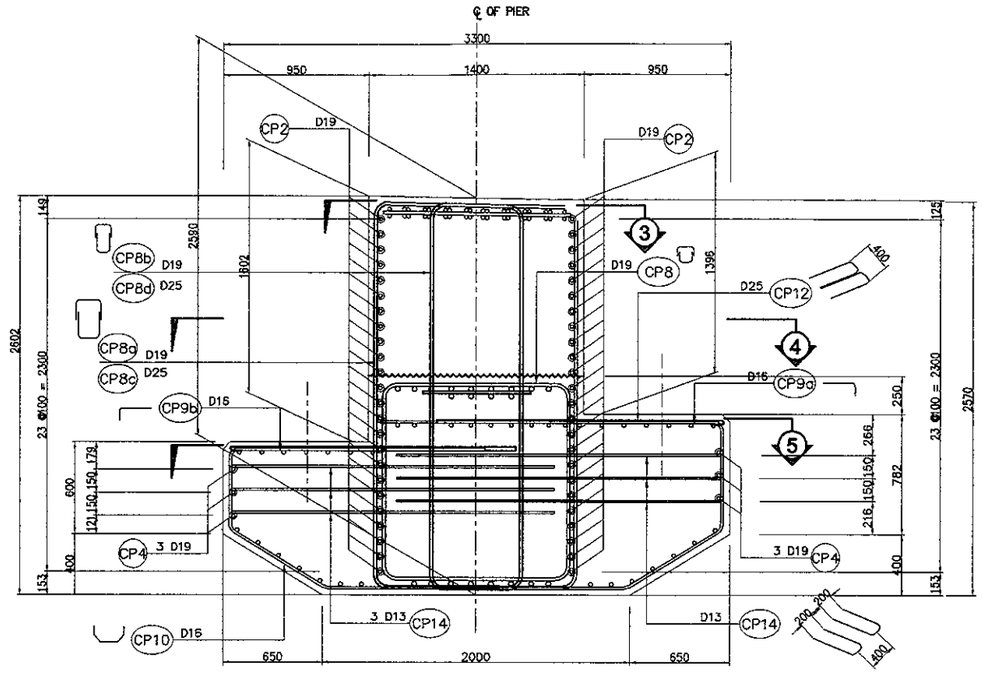

2 SECTION
SCALE 1:40

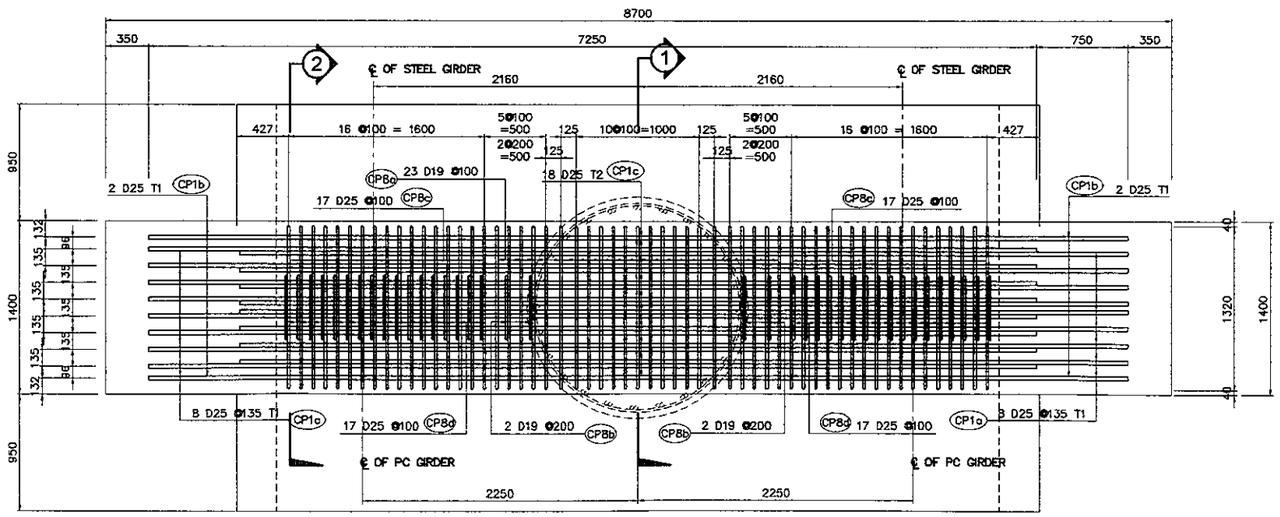

3 PLAN ON COPING TOP
SCALE 1:50

NOTES :
1. ALL DIMENSIONS ARE IN MILIMETERS.
2. CONCRETE : fc' = 30MPa
3. REINFORCING STEEL=
   D51 : YIELD STRENGTH = 345 N/mm2
   OTHERS : YIELD STRENGTH = 390 N/mm2

PRINTED: OCT. 18, 2006