JICA JAPAN INTERNATIONAL COOPERATION AGENCY / KEI KATAHIRA & ENGINEERS INTERNATIONAL	DESIGNED BY	CHECKED BY	SUBMITTED BY	REPUBLIC OF INDONESIA MINISTRY OF PUBLIC WORKS DIRECTORATE GENERAL OF HIGHWAYS	PROJECT AND LOCATION :	SCALE :	DRAWING TITLE :	DRAWING NO :
	Name: H. HONDA	Name: T. OKUMURA	Name: M. KIUCHI		DETAILED DESIGN STUDY OF NORTH JAVA CORRIDOR FLYOVER PROJECT GEBANG FLYOVER - CONTRACT PACKAGE 2 (NAGREG - GEBANG) WEST JAVA PROVINCE	1 : 200	ARRANGEMENT OF REINFORCEMENT FOR PC GIRDER A1-P2	GCL-011
	Sign	Sign	Sign	APPROVED BY: Ir. HERRY VAZA M,Eng.Sc NIP. : 110038400		FULL SIZE A3		SHEET NO : 11 / 21
	Date	Date	Date	Sign / Date				

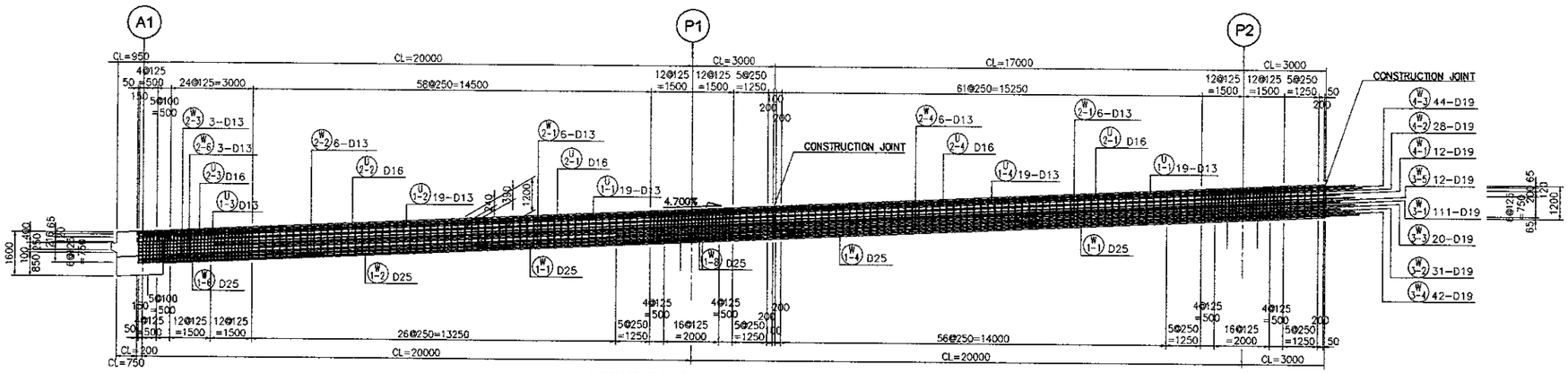

SECTION SPAN A1~P2

SCALE : 1 : 200

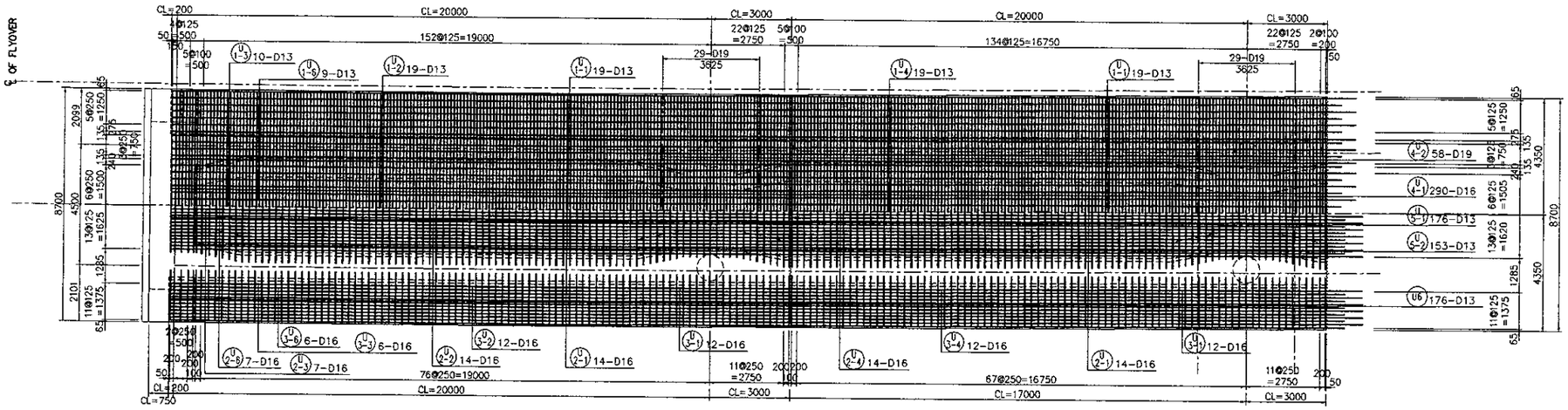

SECTION TOP SLAB

SCALE : 1 : 200

SECTION BOTTOM SLAB

SCALE : 1 : 200

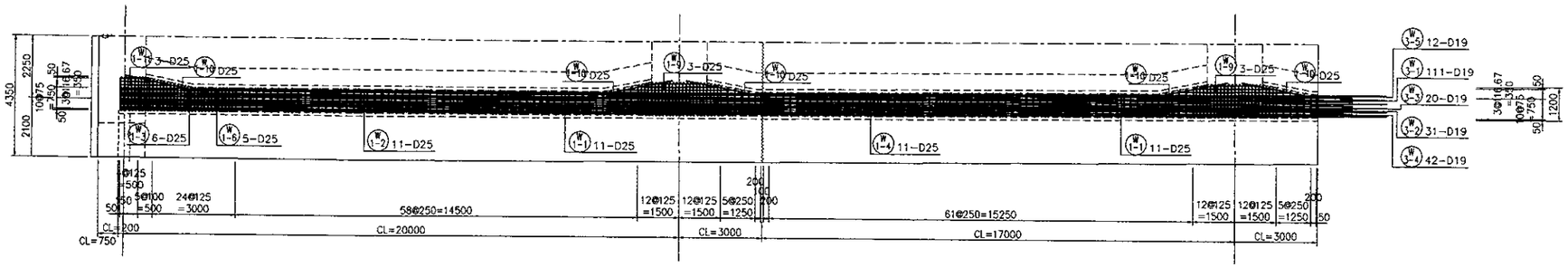

SECTION BOTTOM GIRDER

SCALE : 1 : 200

JICA JAPAN INTERNATIONAL COOPERATION AGENCY / KEI KATAHIRA & ENGINEERS INTERNATIONAL	DESIGNED BY	CHECKED BY	SUBMITTED BY	REPUBLIC OF INDONESIA MINISTRY OF PUBLIC WORKS DIRECTORATE GENERAL OF HIGHWAYS	PROJECT AND LOCATION :	SCALE :	DRAWING TITLE :	DRAWING NO :
	Name: H. HONDA	Name: T. OKUMURA	Name: M. KIUCHI		DETAILED DESIGN STUDY OF NORTH JAVA CORRIDOR FLYOVER PROJECT GEBANG FLYOVER - CONTRACT PACKAGE 2 (NAGREG - GEBANG) WEST JAVA PROVINCE	1 : 200	ARRANGEMENT OF REINFORCEMENT FOR PC GIRDER P2 - P4	GCL-012
	Sign	Sign	Sign	APPROVED BY: Ir. HERRY VAZA M,Eng.Sc NIP. : 110038400		FULL SIZE A3		SHEET NO : 12 / 21
	Date	Date	Date	Sign / Date				

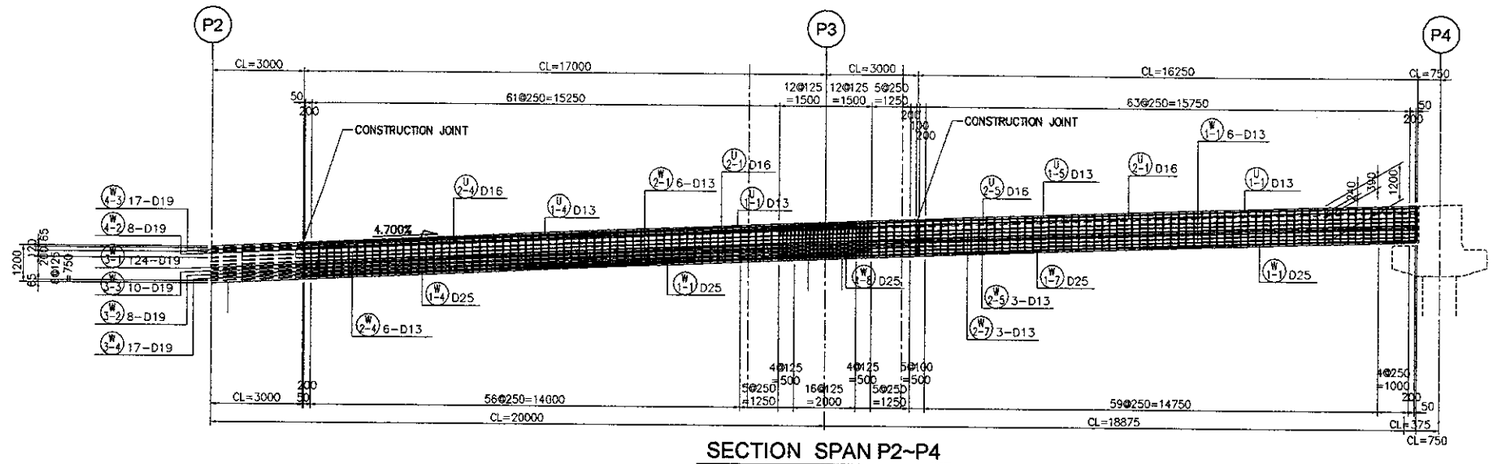

SECTION SPAN P2~P4

SCALE : 1 : 200

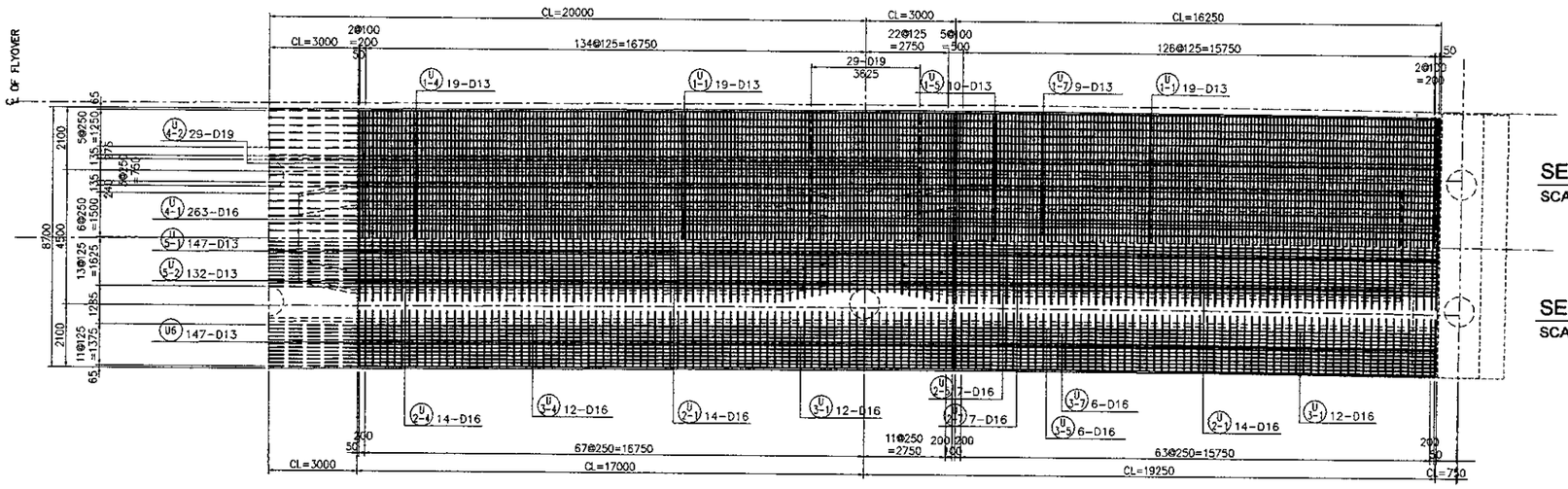

SECTION TOP SLAB

SCALE : 1 : 200

SECTION BOTTOM SLAB

SCALE : 1 : 200

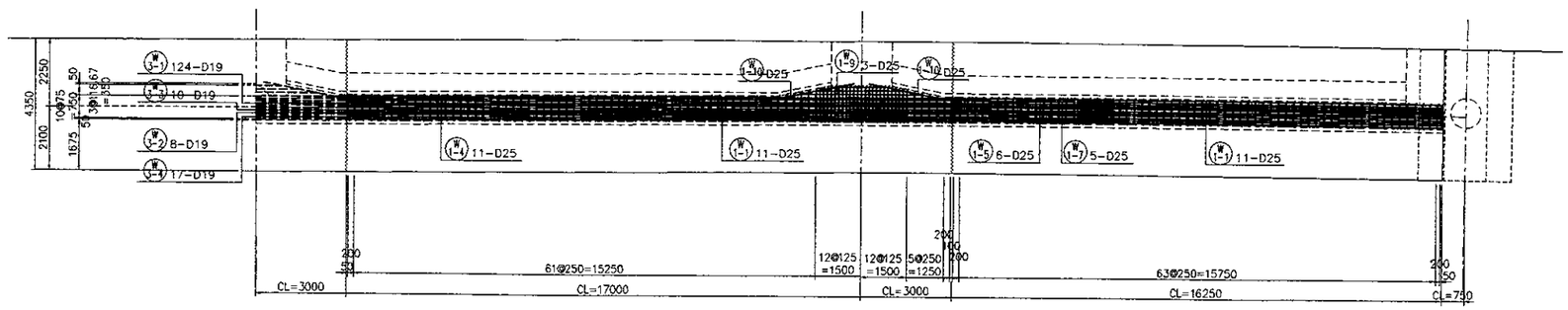

SECTION BOTTOM GIRDER

SCALE : 1 : 200

JAPAN INTERNATIONAL COOPERATION AGENCY KATAHIRA & ENGINEERS INTERNATIONAL	DESIGNED BY		CHECKED BY		SUBMITTED BY		REPUBLIC OF INDONESIA MINISTRY OF PUBLIC WORKS DIRECTORATE GENERAL OF HIGHWAYS	PROJECT AND LOCATION :	SCALE :	DRAWING TITLE :	DRAWING NO :
	Name	H. HONDA	Name	T. OKUMURA	Name	M. KIUCHI		DETAILED DESIGN STUDY OF NORTH JAVA CORRIDOR FLYOVER PROJECT GEBANG FLYOVER - CONTRACT PACKAGE 2 (NAGREG - GEBANG) WEST JAVA PROVINCE	1 : 100	ARRANGEMENT OF REINFORCEMENT FOR PC GIRDER A1-P4 (1 OF 2)	GCL-013
	Sign		Sign		Sign		APPROVED BY: Ir. HERRY VAZA M,Eng.Sc NIP. : 110038400		FULL SIZE A3		SHEET NO : 13 / 21
	Date		Date		Date		Sign / Date				

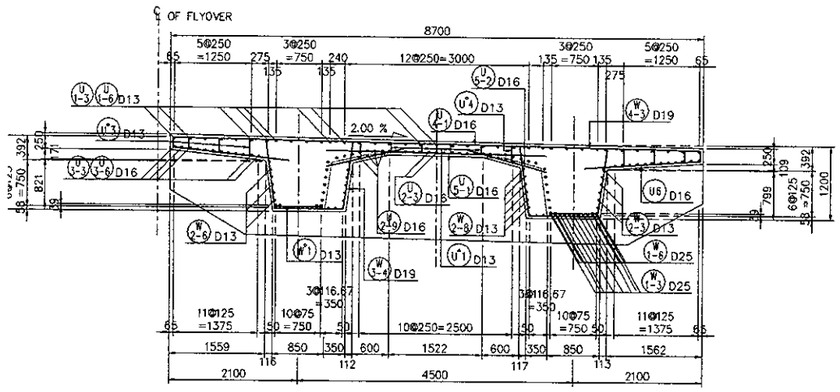

SECTION AT A1
SCALE : 1 : 100

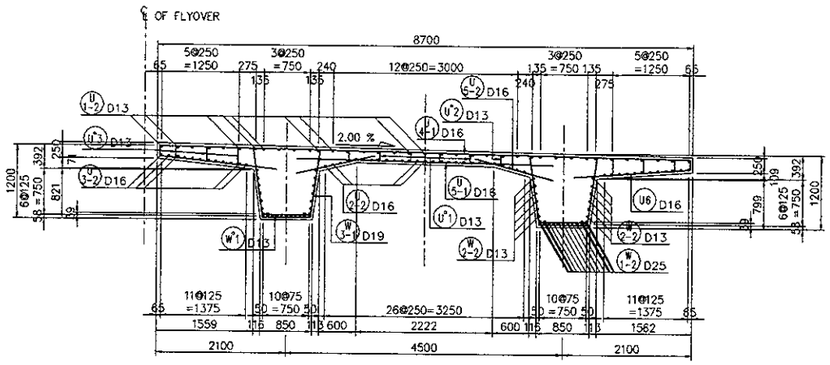

SECTION MID SPAN A1~P1
SCALE : 1 : 100

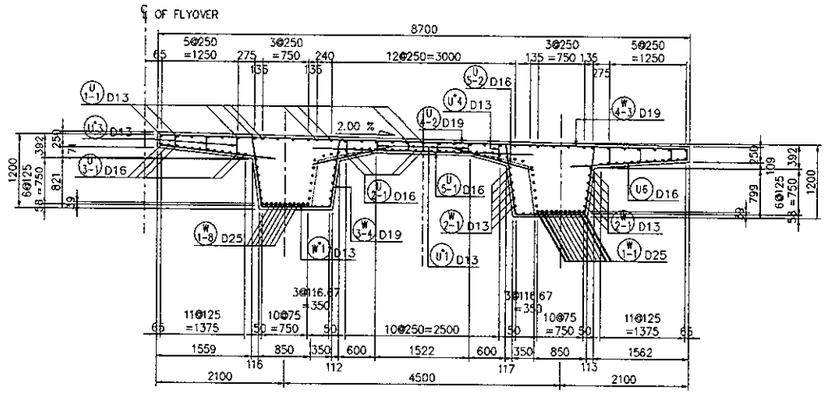

SECTION AT P1
SCALE : 1 : 100

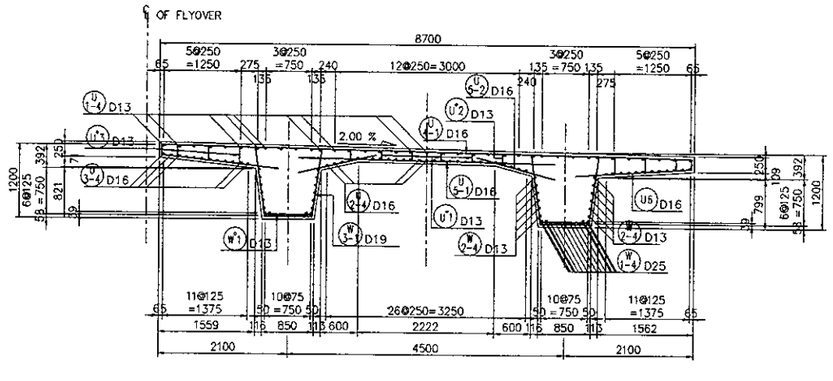

SECTION MID SPAN P1~P2
SCALE : 1 : 100

JICA JAPAN INTERNATIONAL COOPERATION AGENCY / KEI KATAHIRA & ENGINEERS INTERNATIONAL	DESIGNED BY	CHECKED BY	SUBMITTED BY	REPUBLIC OF INDONESIA MINISTRY OF PUBLIC WORKS DIRECTORATE GENERAL OF HIGHWAYS	PROJECT AND LOCATION :	SCALE :	DRAWING TITLE :	DRAWING NO :
	Name: H. HONDA	Name: T. OKUMURA	Name: M. KIUCHI		DETAILED DESIGN STUDY OF NORTH JAVA CORRIDOR FLYOVER PROJECT GEBANG FLYOVER - CONTRACT PACKAGE 2 (NAGREG - GEBANG) WEST JAVA PROVINCE	1 : 100	ARRANGEMENT OF REINFORCEMENT FOR PC GIRDER A1-P4 (2 OF 2)	GCL-014
	Sign	Sign	Sign	APPROVED BY: Ir. HERRY VAZA M,Eng.Sc				SHEET NO :
	Date	Date	Date	NIP. : 110038400 / Sign / Date		FULL SIZE A3		14/21

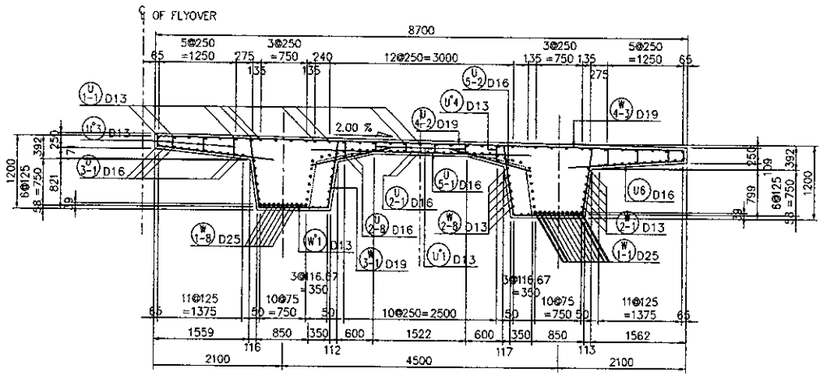

SECTION AT P2

SCALE : 1 : 100

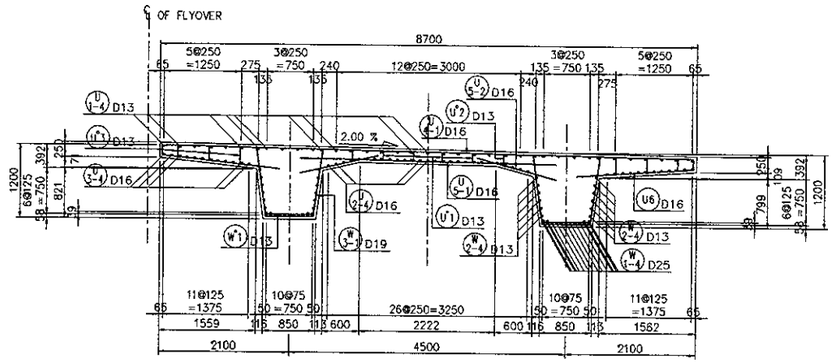

SECTION MID SPAN P2~P3

SCALE : 1 : 100

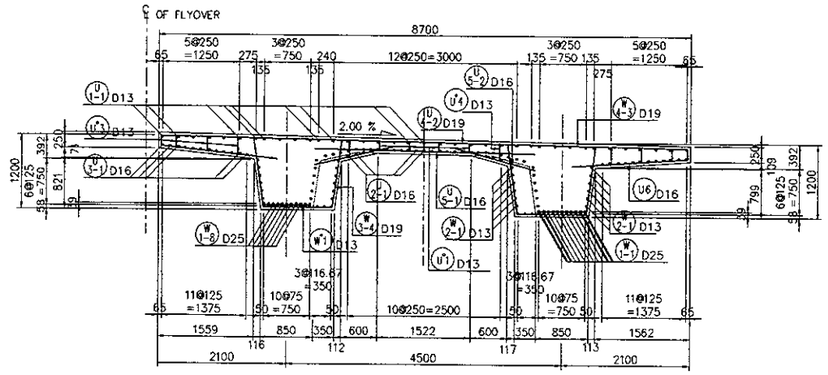

SECTION AT P3

SCALE : 1 : 100

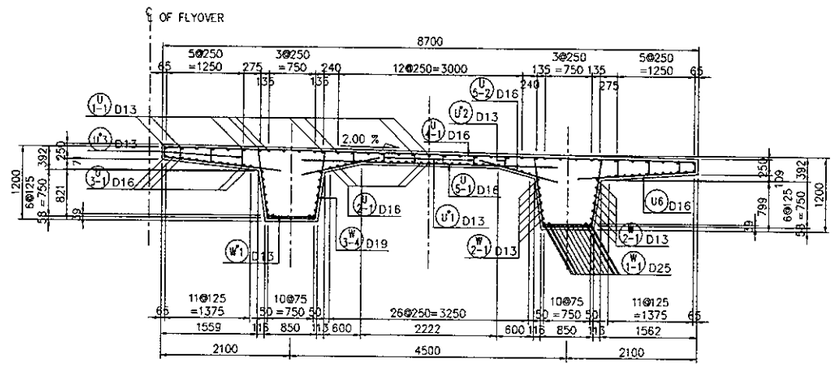

SECTION MID SPAN P3~P4

SCALE : 1 : 100

JICA JAPAN INTERNATIONAL COOPERATION AGENCY / KATAHIRA & ENGINEERS INTERNATIONAL	DESIGNED BY	CHECKED BY	SUBMITTED BY	REPUBLIC OF INDONESIA MINISTRY OF PUBLIC WORKS DIRECTORATE GENERAL OF HIGHWAYS	PROJECT AND LOCATION :	SCALE :	DRAWING TITLE :	DRAWING NO :
	Name: H. HONDA	Name: T. OKUMURA	Name: M. KIUCHI		DETAILED DESIGN STUDY OF NORTH JAVA CORRIDOR FLYOVER PROJECT GEBANG FLYOVER - CONTRACT PACKAGE 2 (NAGREG - GEBANG) WEST JAVA PROVINCE	1 : 300	REINFORCEMENT SCHEDULE FOR PC GIRDER A1 - P4 (1 OF 3)	GCL-015
	Sign	Sign	Sign	APPROVED BY: Ir. HERRY VAZA M,Eng.Sc				SHEET NO :
	Date	Date	Date	NIP. : 110038400 / Sign / Date		FULL SIZE A3		15 / 21

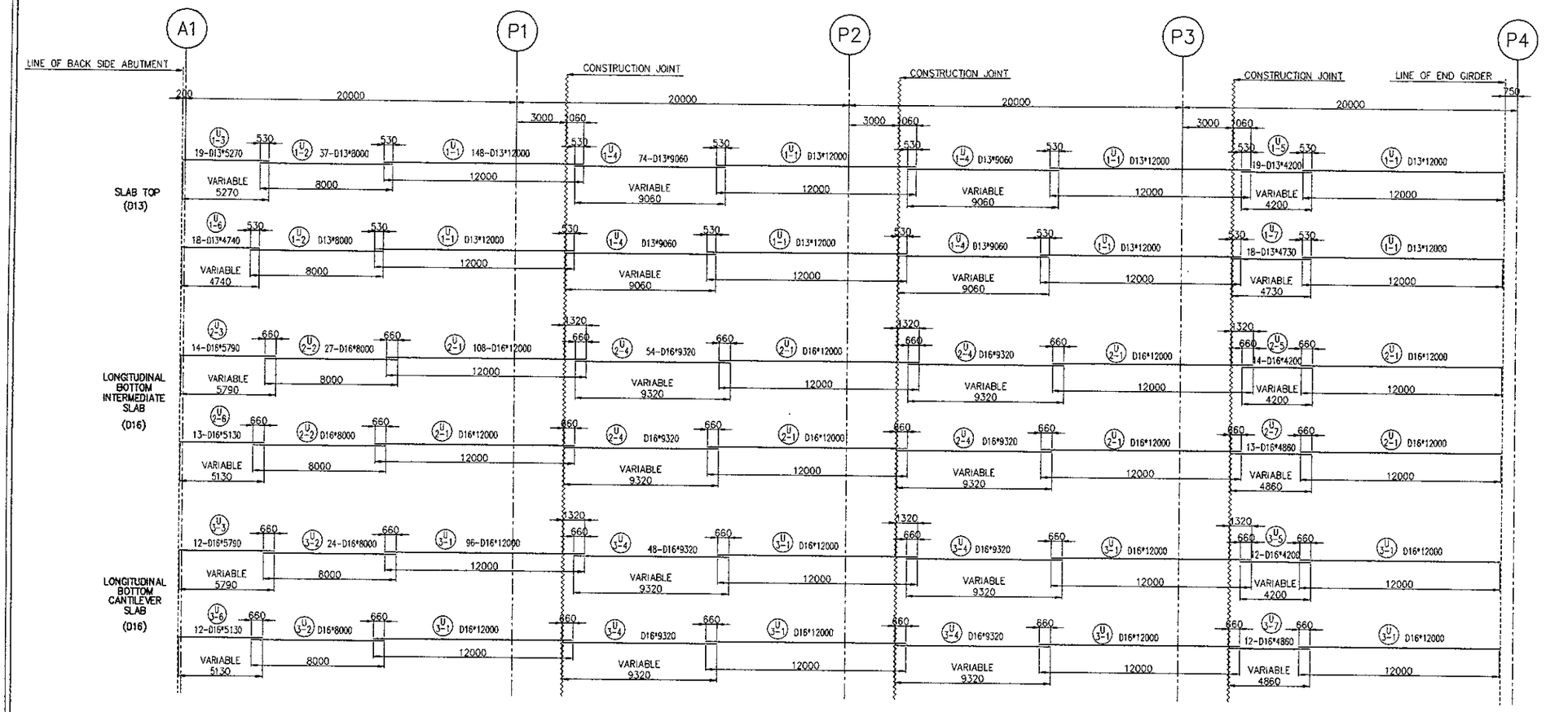

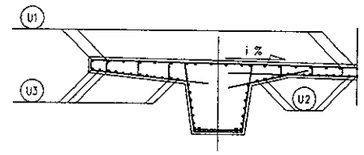

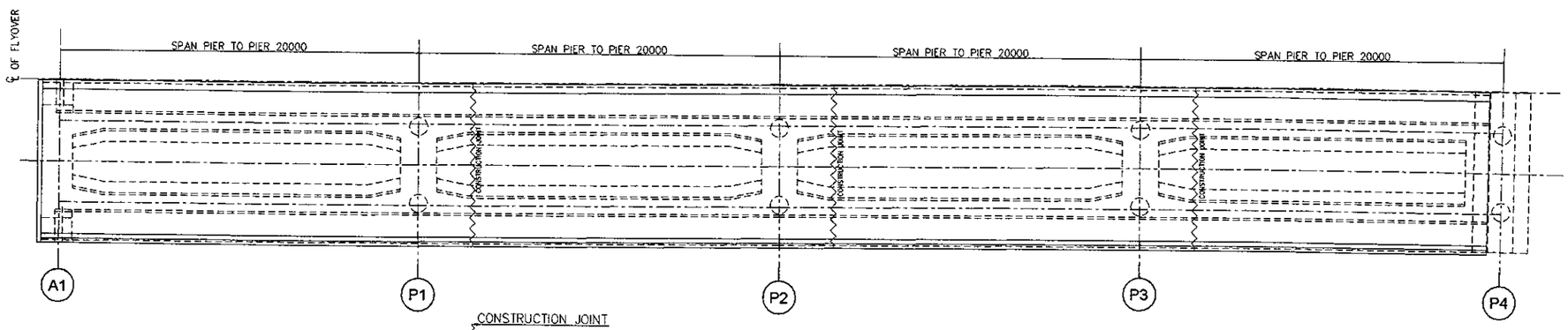

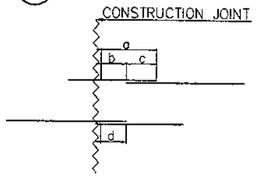

	a	b	c	d
D 13	1060	530	530	530
D 16	1320	660	660	660

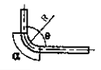

	MAIN REBARS										STIRRUP						
	θ≤90° R=3φ	θ>90° R=5.5φ	θ=45°		θ=60°		θ=90°		θ=135°		R=2.5φ	θ=45°		θ=60°		θ=90°	
			α	AL	α	AL	α	AL	α	AL		α	AL	α	AL	α	AL
D 13	39	71.5	92	98	82	53	61	17	55	3	32.5	77	80	66	46	51	14
D 16	48	88	113	119	100	66	75	21	69	4	40	94	99	84	55	63	17

JICA JAPAN INTERNATIONAL COOPERATION AGENCY / KEI KATAHIRA & ENGINEERS INTERNATIONAL	DESIGNED BY	CHECKED BY	SUBMITTED BY	REPUBLIC OF INDONESIA MINISTRY OF PUBLIC WORKS DIRECTORATE GENERAL OF HIGHWAYS	PROJECT AND LOCATION :	SCALE :	DRAWING TITLE :	DRAWING NO :
	Name: H. HONDA	Name: T. OKUMURA	Name: M. KIUCHI		DETAILED DESIGN STUDY OF NORTH JAVA CORRIDOR FLYOVER PROJECT GEBANG FLYOVER - CONTRACT PACKAGE 2 (NAGREG - GEBANG) WEST JAVA PROVINCE	1 : 300	REINFORCEMENT SCHEDULE FOR PC GIRDER A1 - P4 (2 OF 3)	GCL-016
	Sign	Sign	Sign	APPROVED BY: Ir. HERRY VAZA M,Eng.Sc		FULL SIZE A3		SHEET NO : 16 /21
	Date	Date	Date	NIP. : 110038400 — Sign / Date				

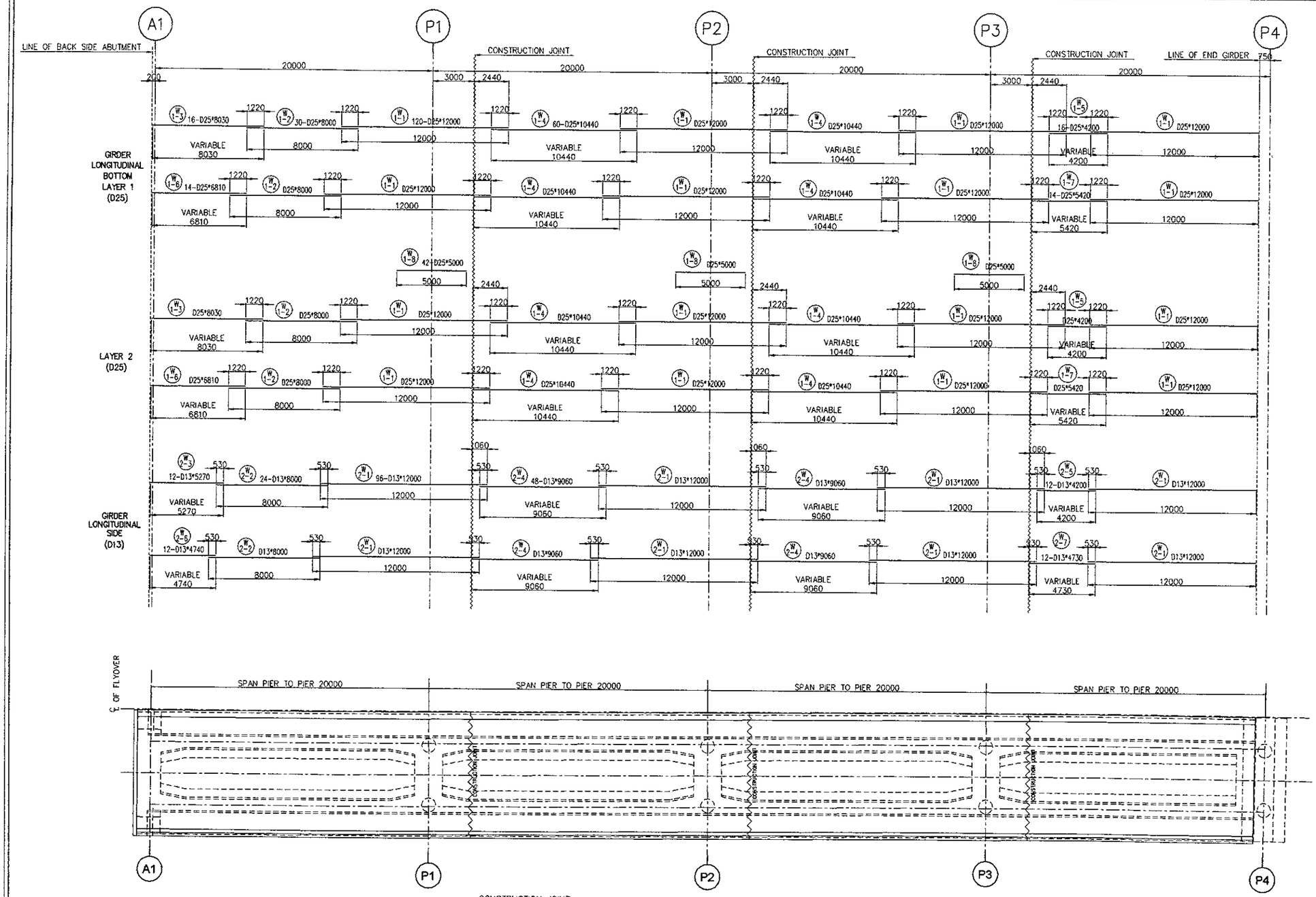

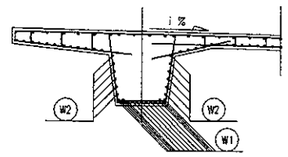

	a	b	c	d
D 13	1060	530	530	530
D 25	2440	1220	1220	1220

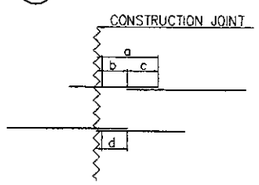

	MAIN REBARS												STIRRUP						
	θ=90° R=3φ	θ=90° R=5.5φ	θ=45° α	θ=45° ΔL	θ=60° α	θ=60° ΔL	θ=90° α	θ=90° ΔL	θ=135° α	θ=135° ΔL	R=2.5φ	θ=45° α	θ=45° ΔL	θ=60° α	θ=60° ΔL	θ=90° α	θ=90° ΔL
D 13	39	71.5	62	88	82	63	61	17	88	3	32.5	77	80	66	46	51	14
D 25	76	137.5	117	165	157	103	118	32	169	6	75*	177	185	157	103	118	32

* R=3φ

JICA JAPAN INTERNATIONAL COOPERATION AGENCY / KEI KATAHIRA & ENGINEERS INTERNATIONAL	DESIGNED BY	CHECKED BY	SUBMITTED BY	REPUBLIC OF INDONESIA MINISTRY OF PUBLIC WORKS DIRECTORATE GENERAL OF HIGHWAYS	PROJECT AND LOCATION :	SCALE :	DRAWING TITLE :	DRAWING NO :
	Name: H. HONDA	Name: T. OKUMURA	Name: M. KIUCHI		DETAILED DESIGN STUDY OF NORTH JAVA CORRIDOR FLYOVER PROJECT GEBANG FLYOVER - CONTRACT PACKAGE 2 (NAGREG - GEBANG) WEST JAVA PROVINCE	NTS	REINFORCEMENT SCHEDULE FOR PC GIRDER A1 - P4 (3 OF 3)	GCL-017
	Sign	Sign	Sign	APPROVED BY: Ir. HERRY VAZA M,Eng.Sc NIP. : 110038400		FULL SIZE A3		SHEET NO : 17 / 21
	Date	Date	Date	Sign / Date				

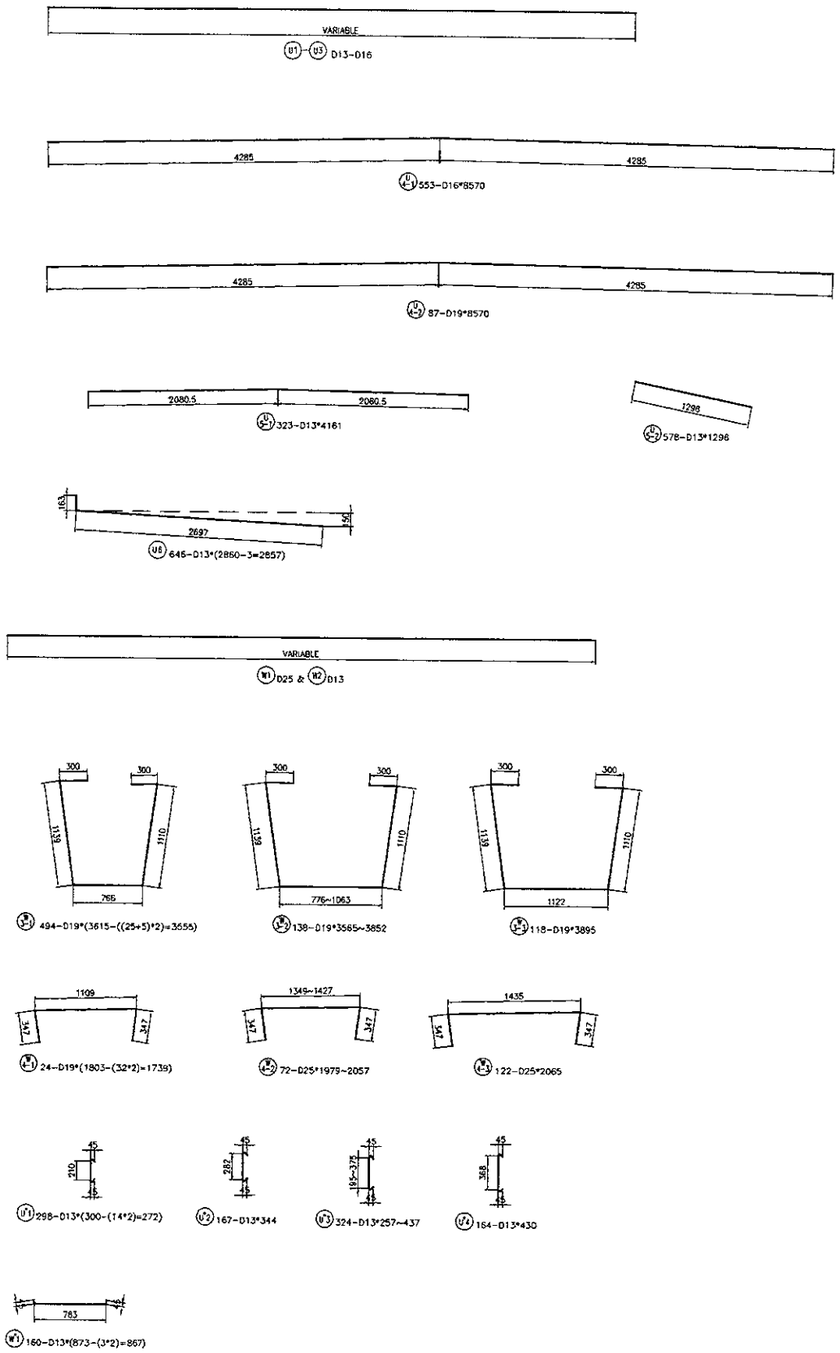

BAR BENDING SCHEDULE

REBAR NAME	DIA. (mm)	LENGTH (mm)	NOS.	UNIT WEIGHT (kg/m')	WEIGHT (kg)	TOTAL WEIGHT (kg)	DIAGRAM	REMARKS
U 1 - 1	13	12000	148	1.04	12.48	1847		
U 1 - 2	13	8000	37	1.04	8.32	308		
U 1 - 3	13	5270	19	1.04	5.48	104		varies length
U 1 - 4	13	9060	74	1.04	9.42	697		varies length
U 1 - 5	13	4200	19	1.04	4.37	83		varies length
U 1 - 6	13	4740	18	1.04	4.93	89		varies length
U 1 - 7	13	4730	18	1.04	4.92	89		varies length
U 2 - 1	16	12000	108	1.58	18.96	2048		
U 2 - 2	16	8000	27	1.58	12.64	341		
U 2 - 3	16	5790	14	1.58	9.15	128		varies length
U 2 - 4	16	9320	54	1.58	14.73	795		varies length
U 2 - 5	16	4200	14	1.58	6.64	93		varies length
U 2 - 6	16	5130	13	1.58	8.11	105		varies length
U 2 - 7	16	4860	13	1.58	7.68	100		varies length
U 2 - 8	16	3164	24	1.58	5.00	120		varies length
U 2 - 9	16	1582	6	1.58	2.50	20		varies length
U 3 - 1	16	12000	96	1.58	18.96	1820		
U 3 - 2	16	8000	24	1.58	12.64	303		
U 3 - 3	16	5790	12	1.58	9.15	110		varies length
U 3 - 4	16	9320	48	1.58	14.73	707		varies length
U 3 - 5	16	4200	12	1.58	6.64	80		varies length
U 3 - 6	16	5130	12	1.58	8.11	97		varies length
U 3 - 7	16	4860	12	1.58	7.68	92		varies length
U 4 - 1	16	8570	553	1.58	13.54	7488		
U 4 - 2	19	8570	87	2.23	19.11	1663		
U 5 - 1	13	4161	323	1.04	4.33	1398		
U 5 - 2	13	1298	578	1.04	1.35	779		
U 6	13	2857	646	1.04	2.97	1919		
U' 1	13	272	298	1.04	0.28	84		
U' 2	13	344	167	1.04	0.36	60		varies length
U' 3	13	342	495	1.04	0.36	178		varies length
U' 4	13	430	164	1.04	0.45	73		varies length
SUB TOTAL - 1						23816		

REBAR NAME	DIA. (mm)	LENGTH (mm)	NOS.	UNIT WEIGHT (kg/m')	WEIGHT (kg)	TOTAL WEIGHT (kg)	DIAGRAM	REMARKS
W 1 - 1	25	12000	120	3.85	46.20	5544		
W 1 - 2	25	8000	30	3.85	30.80	924		
W 1 - 3	25	8030	16	3.85	30.92	495		varies length
W 1 - 4	25	10440	60	3.85	40.19	2412		varies length
W 1 - 5	25	4200	16	3.85	16.17	259		varies length
W 1 - 6	25	6810	14	3.85	26.22	367		varies length
W 1 - 7	25	5420	14	3.85	20.87	292		varies length
W 1 - 8	25	5000	42	3.85	19.25	809		varies length
W 1 - 9	25	2830	18	3.85	10.90	196		varies length
W 1 - 10	25	3275	14	3.85	12.61	177		varies length
W 1 - 11	25	1315	6	3.85	5.06	30		varies length
W 2 - 1	13	12000	96	1.04	12.48	1198		
W 2 - 2	13	8000	24	1.04	8.32	200		
W 2 - 3	13	5270	12	1.04	5.48	66		varies length
W 2 - 4	13	9060	48	1.04	9.42	452		varies length
W 2 - 5	13	4200	12	1.04	4.37	52		varies length
W 2 - 6	13	4740	12	1.04	4.93	59		varies length
W 2 - 7	13	4730	12	1.04	4.92	59		varies length
W 2 - 8	13	3185	30	1.04	3.31	99		varies length
W 2 - 9	13	1593	10	1.04	1.66	17		varies length
W 3 - 1	19	3555	494	2.23	7.93	3916		
W 3 - 2	19	3683	138	2.23	8.21	1133		varies length
W 3 - 3	19	3895	116	2.23	8.69	1025		
W 4 - 1	19	1739	24	2.23	3.88	93		
W 4 - 2	19	2018	72	2.23	4.50	324		varies length
W 4 - 3	19	2065	122	2.23	4.60	562		
W' 1	13	867	160	1.04	0.90	144		
SUB TOTAL - 2						20904		
TOTAL REBAR WEIGHT A1 - P4						44720		

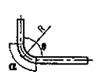

	MAIN REBARS											STIRRUP								
	θ≤90° R=3φ	θ>90° R=5.5φ	θ=45°		θ=60°		θ=90°		θ=135°			R=2.5φ	θ=45°		θ=60°		θ=90°			
			α	AL	α	AL	α	AL	α	AL			α	AL	α	AL	α	AL		
D 13	39	71.5	92	99	82	63	61	17	69	3		32.5	77	80	66	45	51	14		
D 16	48	88	113	119	100	86	76	21	69	4		40	94	99	84	55	63	17		
D 19	57	104.5	134	141	119	78	89	25	82	5		47.5	112	117	99	66	75	20		
D 25	75	137.5	117	185	157	103	118	32	108	6		75*	177	185	157	103	118	32		

*R=3φ

JICA JAPAN INTERNATIONAL COOPERATION AGENCY / KATAHIRA & ENGINEERS INTERNATIONAL	DESIGNED BY	CHECKED BY	SUBMITTED BY	REPUBLIC OF INDONESIA MINISTRY OF PUBLIC WORKS DIRECTORATE GENERAL OF HIGHWAYS	PROJECT AND LOCATION :	SCALE :	DRAWING TITLE :	DRAWING NO :
	Name: H. HONDA	Name: T. OKUMURA	Name: M. KIUCHI		DETAILED DESIGN STUDY OF NORTH JAVA CORRIDOR FLYOVER PROJECT GEBANG FLYOVER - CONTRACT PACKAGE 2 (NAGREG - GEBANG) WEST JAVA PROVINCE	1 : 100	ARRANGEMENT OF REINFORCEMENT FOR CROSS BEAMS P1, P2,P3	GCL-018
	Sign	Sign	Sign	APPROVED BY: Ir. HERRY VAZA M,Eng.Sc		FULL SIZE A3		SHEET NO : 18 / 21
	Date	Date	Date	NIP. : 110038400				

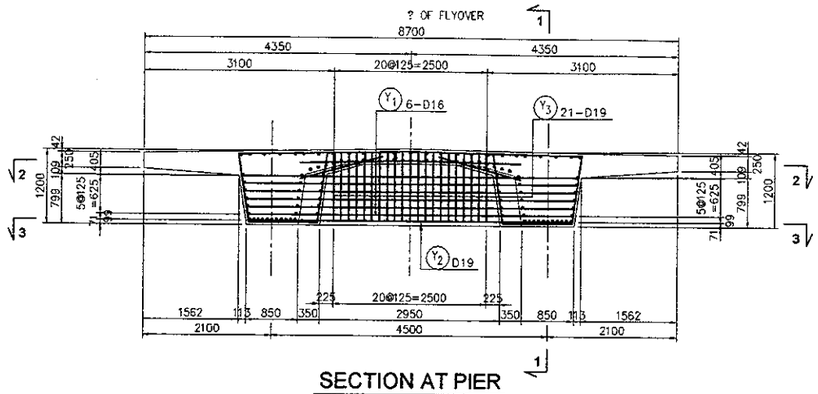

SECTION AT PIER
SCALE : 1 :100

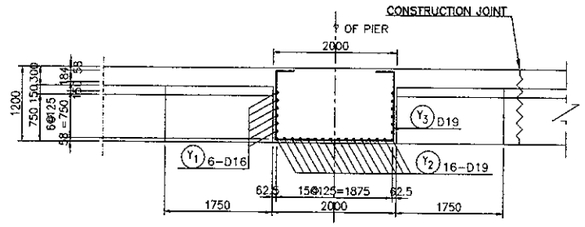

SECTION 1 - 1
SCALE : 1 : 100

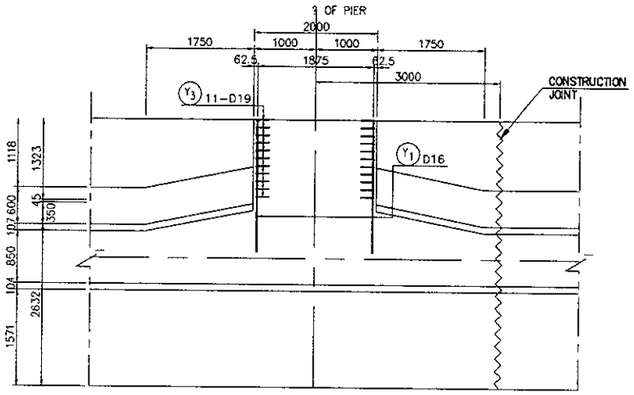

SECTION 2 - 2
SCALE : 1 : 100

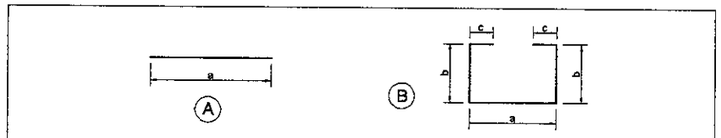

REINF NO.	ϕ (mm)	TYPE	BENDING DIMENSION (mm) a	b	c	d	TOTAL LENGTH (m)	NUMBER	UNIT WEIGHT (kg/m)	WEIGHT (kg)	REMARK
PIER											
Y 1	D16	A	5430				5.430	12	1.58	103	—
2	D19	A	5300				5.300	16	2.23	189	—
3	D19	B	1901	1043	276		4.460	21	2.23	209	☐
									D19	398	
									D16	103	
									TOTAL (per 1 pier)	501	
PIER LOCATION							A1 - P4 (P1, P2,P3)				
REBAR WEIGHT TOTAL							501 x 3 = 1503 kg				

STIRRUP

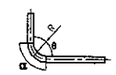

	R= 2.5ϕ	θ= 45° α	θ= 45° ΔL	θ= 60° α	θ= 60° ΔL	θ= 90° α	θ= 90° ΔL
D16	40	94	99	84	55	63	17
D19	47.5	112	117	99	66	75	20

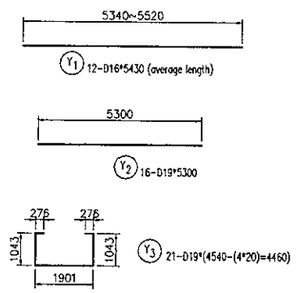

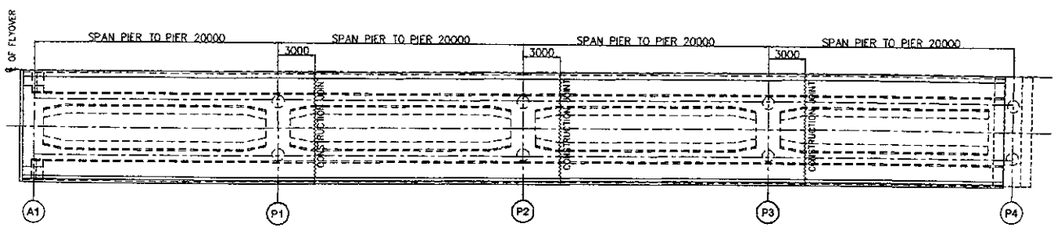

KEY PLAN
SCALE : 1 : 500

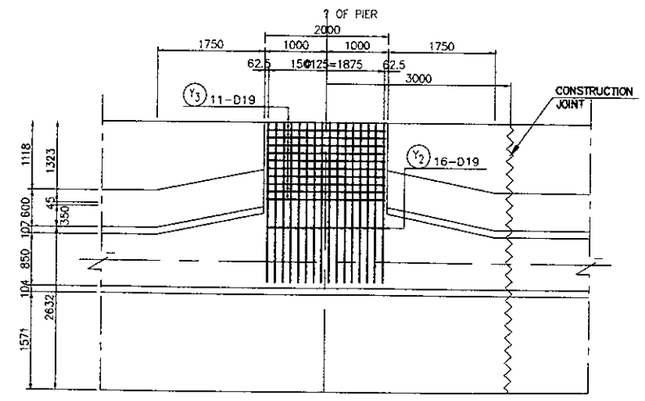

SECTION 3 - 3
SCALE : 1 : 100

JICA JAPAN INTERNATIONAL COOPERATION AGENCY / KATAHIRA & ENGINEERS INTERNATIONAL	DESIGNED BY	CHECKED BY	SUBMITTED BY	REPUBLIC OF INDONESIA MINISTRY OF PUBLIC WORKS DIRECTORATE GENERAL OF HIGHWAYS	PROJECT AND LOCATION :	SCALE :	DRAWING TITLE :	DRAWING NO :
	Name: H. HONDA	Name: T. OKUMURA	Name: M. KIUCHI	APPROVED BY: Ir. HERRY VAZA M,Eng.Sc, NIP. : 110038400	DETAILED DESIGN STUDY OF NORTH JAVA CORRIDOR FLYOVER PROJECT GEBANG FLYOVER - CONTRACT PACKAGE 2 (NAGREG - GEBANG) WEST JAVA PROVINCE	1 : 100	ARRANGEMENT OF REINFORCEMENT FOR CROSS BEAMS A1	GCL-019
	Sign	Sign	Sign	Sign		FULL SIZE A3		SHEET NO : 19 / 21
	Date	Date	Date	Date				

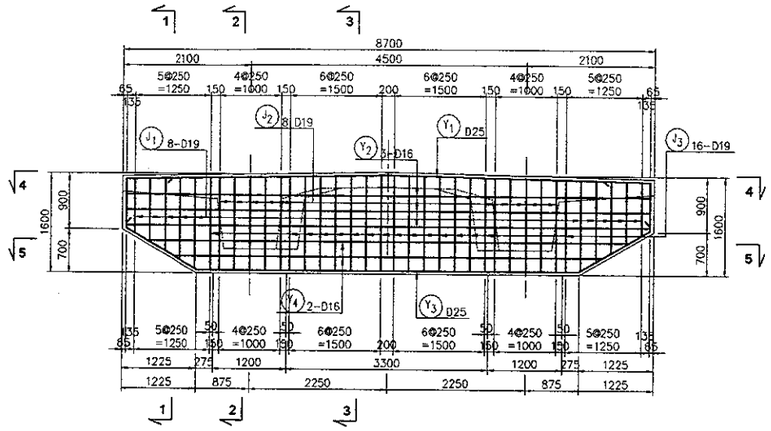

SECTION AT ABUTMENT

SCALE : 1 :100

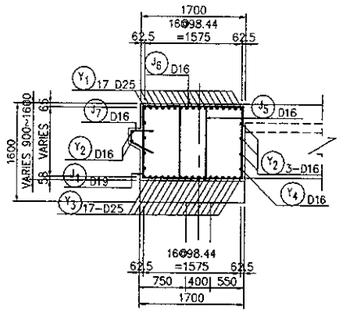

SECTION 1 - 1

SCALE : 1 : 100

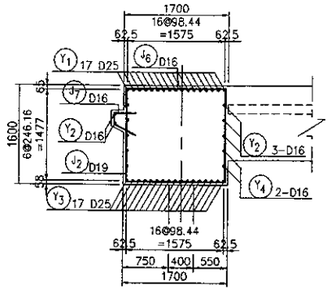

SECTION 2 - 2

SCALE : 1 : 100

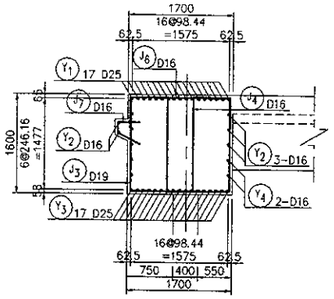

SECTION 3 - 3

SCALE : 1 : 100

BAR BENDING ABUTMENT

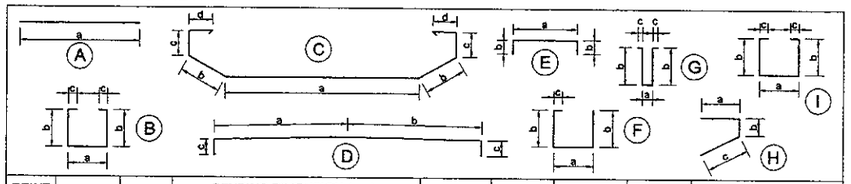

REINF NO.	ϕ (mm)	TYPE	BENDING DIMENSION (mm) a	b	c	d	e	TOTAL LENGTH (m)	NUMBER	UNIT WEIGHT (kg/m)	WEIGHT (kg)	REMARK
A 1												
J 1	D19	F	1601	1078	300			4.57	8	2.23	82	
2	D19	I	1601	1503	340			5.287	8	2.23	94	
3	D19	F	1601	1503	340			4.947	16	2.23	177	
4	D16	G	420	1523	200			3.866	16	1.58	98	
5	D16	G	420	1097.1	200			3.0142	10	1.58	48	
6	D16	E	1620	300				2.22	36	1.58	126	
7	D16	H	350	177	391			0.918	36	1.58	52	
Y 1	D25	D	4286	4286	500			9.572	17	3.85	626	
2	D16	A	8570					8.57	3	1.58	41	
3	D25	C	6222	1351	789	749		12	17	3.85	785	
4	D16	A	10652					10.652	4	1.58	67	
										D25	1411	
										D19	353	
										D16	432	
									REBAR WEIGHT TOTAL		2196 kg	

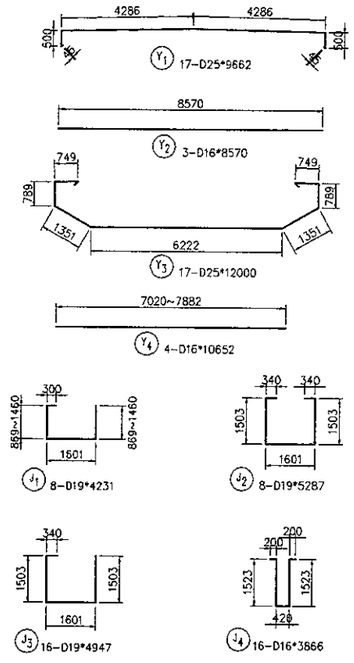

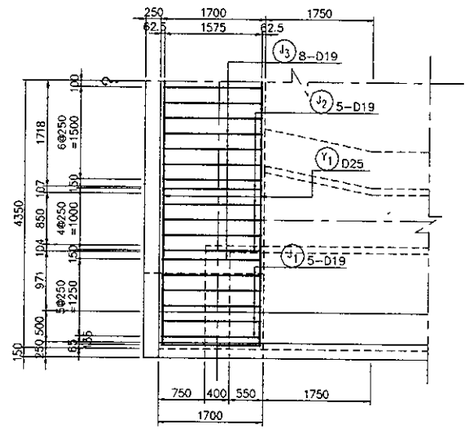

SECTION 4 - 4

SCALE : 1 : 100

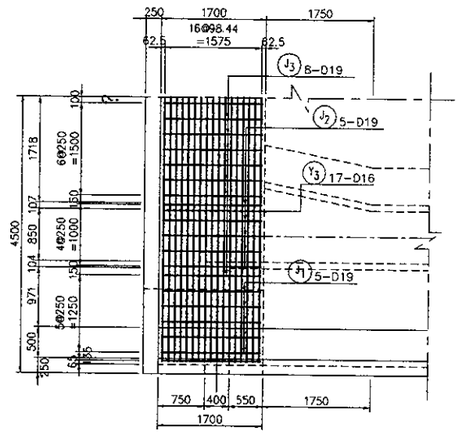

SECTION 5 - 5

SCALE : 1 : 100

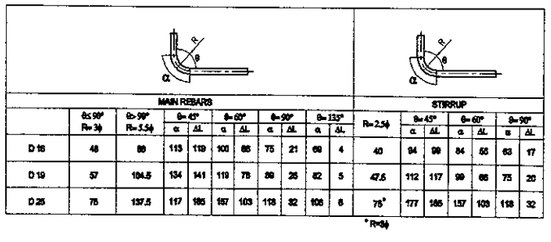

	MAIN REBARS										STIRRUP						
	θ=90° R=3ϕ	θ=90° R=5.5ϕ	θ=45° α	ΔL	θ=60° α	ΔL	θ=90° α	ΔL	θ=135° α	ΔL	R=2.5ϕ	θ=45° α	ΔL	θ=60° α	ΔL	θ=90° α	ΔL
D16	48	80	113	119	100	85	75	21	69	4	40	94	99	84	55	63	17
D19	57	104.5	134	141	119	75	89	25	82	5	47.5	112	117	99	65	75	20
D25	75	137.5	117	185	157	103	118	32	108	6	75*	177	185	157	103	118	32

*R=3ϕ

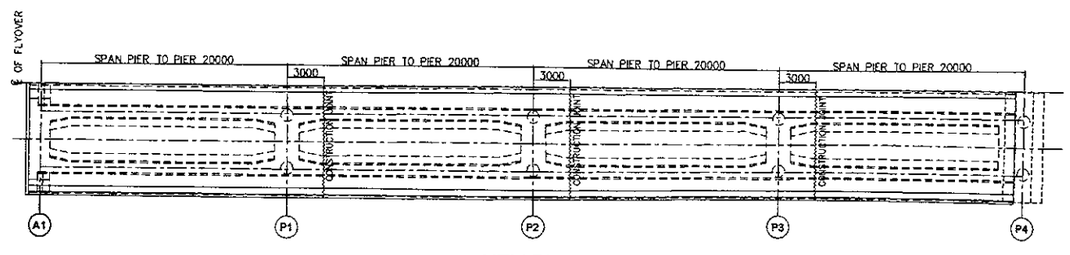

KEY PLAN

SCALE : 1 : 500

JAPAN INTERNATIONAL COOPERATION AGENCY / KATAHIRA & ENGINEERS INTERNATIONAL	DESIGNED BY	CHECKED BY	SUBMITTED BY	REPUBLIC OF INDONESIA MINISTRY OF PUBLIC WORKS DIRECTORATE GENERAL OF HIGHWAYS	PROJECT AND LOCATION :	SCALE :	DRAWING TITLE :	DRAWING NO :
	Name: H. HONDA	Name: T. OKUMURA	Name: M. KIUCHI		DETAILED DESIGN STUDY OF NORTH JAVA CORRIDOR FLYOVER PROJECT GEBANG FLYOVER - CONTRACT PACKAGE 2 (NAGREG - GEBANG) WEST JAVA PROVINCE	1 : 100 1 : 500	ARRANGEMENT OF REINFORCEMENT FOR CROSS BEAMS P4	GCL-020
	Sign	Sign	Sign	APPROVED BY: Ir. HERRY VAZA M,Eng.Sc NIP. : 110038400				SHEET NO :
	Date	Date	Date	Sign / Date		FULL SIZE A3		20 / 21

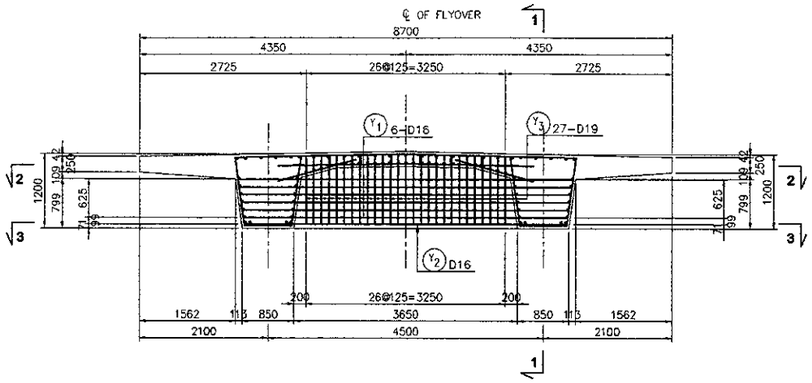

SECTION AT COPING PIER

SCALE : 1 :100

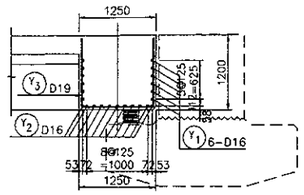

SECTION 1 - 1

SCALE : 1 : 100

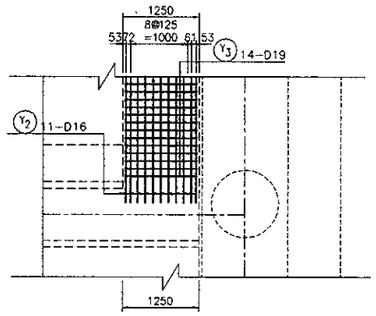

SECTION 2 - 2

SCALE : 1 : 100

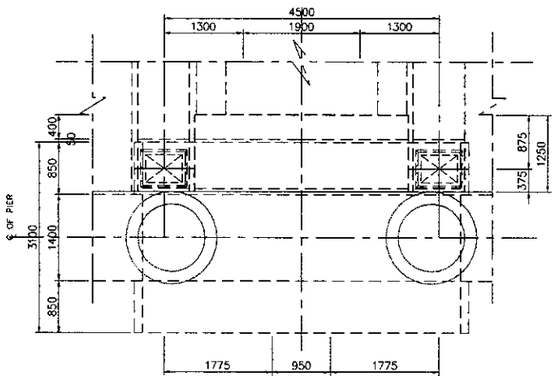

SECTION

SCALE : 1 :100

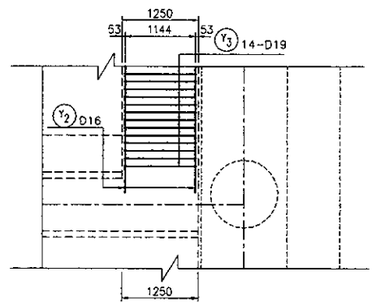

SECTION 3 - 3

SCALE : 1 : 100

BAR BENDING

REINF NO.	φ (mm)	TYPE	BENDING DIMENSION (mm) a	b	c	d	TOTAL LENGTH (m)	NUMBER	UNIT WEIGHT (kg/m)	WEIGHT (kg)	REMARK
PIER											
Y 1	D16	A	5430				5.430	12	1.58	103	—
2	D16	A	5300				5.300	16	1.58	134	—
3	D19	B	1165	1110			3.345	27	2.23	201	⊔
									D19	201	
									D16	237	
									REBAR WEIGHT TOTAL	438 kg	

STIRRUP

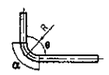

	R=2.5φ	θ=45° α	θ=45° ΔL	θ=60° α	θ=60° ΔL	θ=90° α	θ=90° ΔL
D16	40	94	99	84	55	63	17
D19	47.5	112	117	99	66	75	20

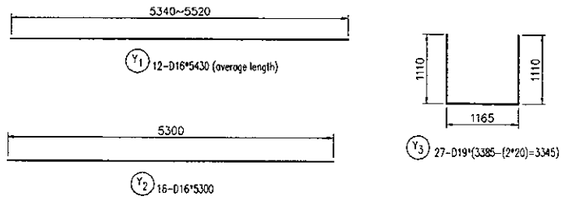

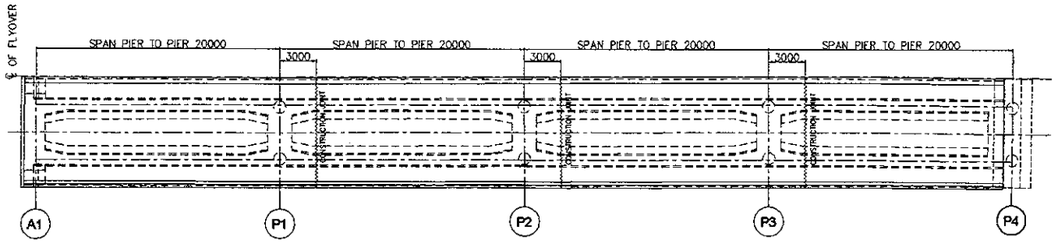

KEY PLAN

SCALE : 1 : 500

JICA JAPAN INTERNATIONAL COOPERATION AGENCY / KEI KATAHIRA & ENGINEERS INTERNATIONAL	DESIGNED BY	CHECKED BY	SUBMITTED BY	REPUBLIC OF INDONESIA MINISTRY OF PUBLIC WORKS DIRECTORATE GENERAL OF HIGHWAYS	PROJECT AND LOCATION :	SCALE :	DRAWING TITLE :	DRAWING NO :
	Name: H. HONDA	Name: T. OKUMURA	Name: M. KIUCHI		DETAILED DESIGN STUDY OF NORTH JAVA CORRIDOR FLYOVER PROJECT GEBANG FLYOVER - CONTRACT PACKAGE 2 (NAGREG - GEBANG) WEST JAVA PROVINCE	1 : 50 1 : 500	ARRANGEMENT OF REINFORCEMENT FOR ANCHORAGE A1 - P4	GCL-021
	Sign	Sign	Sign	APPROVED BY: Ir. HERRY VAZA M,Eng.Sc NIP. : 110038400		FULL SIZE A3		SHEET NO : 21 /21
	Date	Date	Date	Sign / Date				

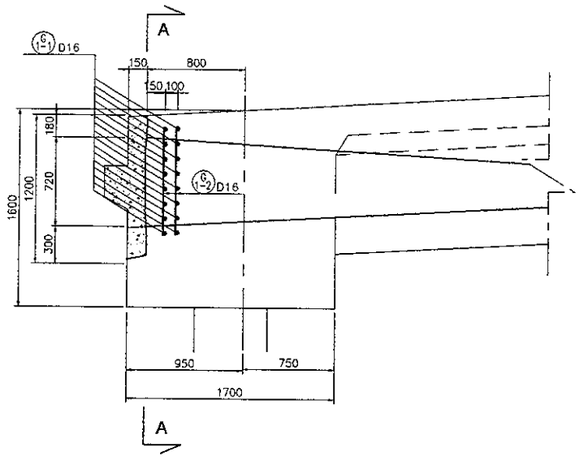

SECTION END ANCHORAGE
SCALE : 1 : 50

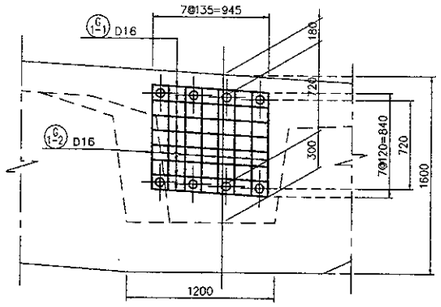

SECTION A - A
SCALE : 1 : 50

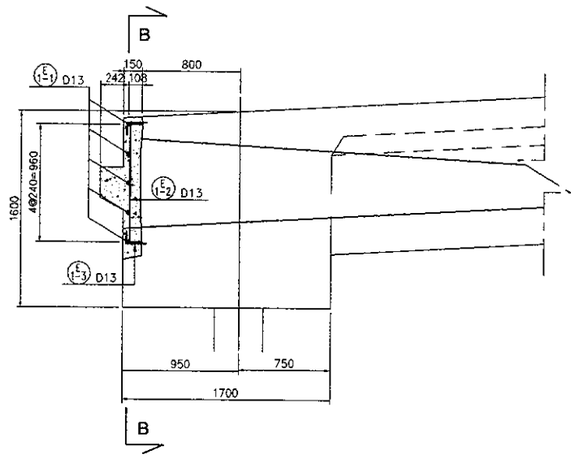

SECTION END ANCHORAGE
SCALE : 1 : 50

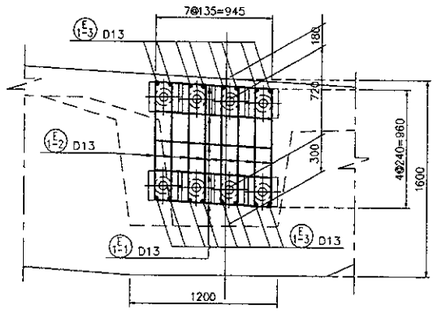

SECTION B - B
SCALE : 1 : 50

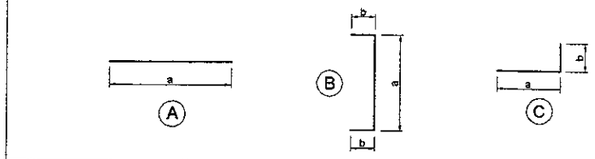

REINF NO.	ϕ (mm)	TYPE	BENDING DIMENSION (mm) a	b	c	d	TOTAL LENGTH (m)	NUMBER	UNIT WEIGHT (kg/m)	WEIGHT (kg)	REMARK
E 1-1	D13	A	945				0.945	16	1.04	16	—
E 1-2	D13	B	960	100			1.132	10	1.04	12	⊔
E 1-3	D13	C	150	50			0.186	32	1.04	6	⊔
G 1-1	D16	A	945				0.945	32	1.58	48	—
G 1-2	D16	A	840				0.84	32	1.58	43	—
									D16	91	
									D13	34	
									REBAR WEIGHT TOTAL	125 kg	

STIRRUP

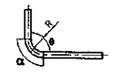

	R=2.5ϕ	θ=45° α	θ=45° ΔL	θ=60° α	θ=60° ΔL	θ=90° α	θ=90° ΔL
D16	40	94	99	84	55	63	17
D19	47.5	112	117	99	66	75	20

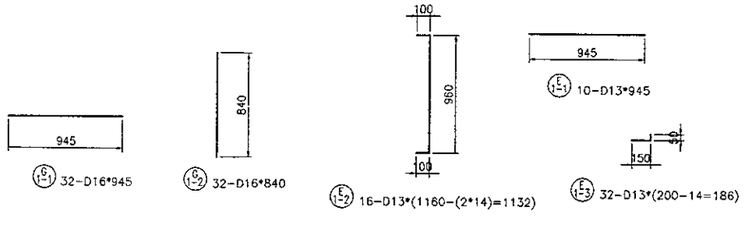

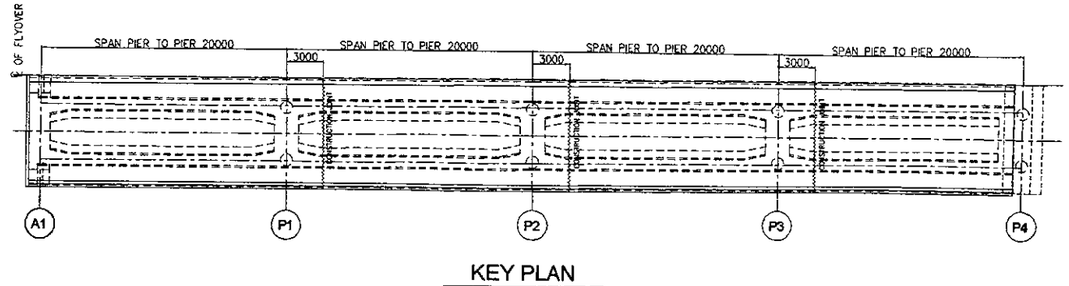

KEY PLAN
SCALE : 1 : 500

JAPAN INTERNATIONAL COOPERATION AGENCY KATAHIRA & ENGINEERS INTERNATIONAL	DESIGNED BY		CHECKED BY		SUBMITTED BY		REPUBLIC OF INDONESIA MINISTRY OF PUBLIC WORKS DIRECTORATE GENERAL OF HIGHWAYS			PROJECT AND LOCATION :	SCALE :	DRAWING TITLE :	DRAWING NO :
	Name	H. HONDA	Name	T. OKUMURA	Name	M. KIUCHI				DETAILED DESIGN STUDY OF NORTH JAVA CORRIDOR FLYOVER PROJECT GEBANG FLYOVER - CONTRACT PACKAGE 2 (NAGREG - GEBANG) WEST JAVA PROVINCE	1 : 250 1 : 200	COORDINATES AND ELEVATION FOR PC GIRDER	GCR-001
	Sign		Sign		Sign		APPROVED BY	Ir. HERRY VAZA M,Eng.Sc NIP. : 110038400	Sign		FULL SIZE A3		SHEET NO :
	Date		Date		Date				Date				01 / 20

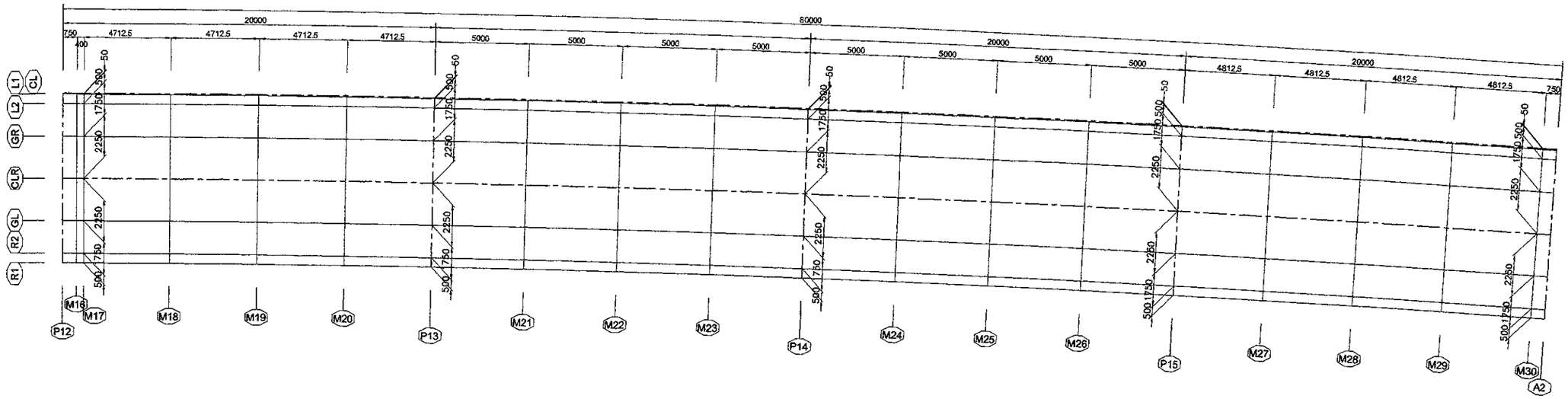

PLAN VIEW

SCALE 1:250

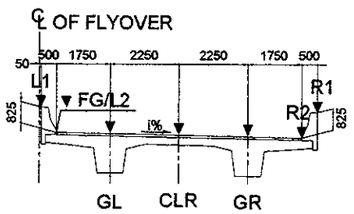

SECTION VIEW

SCALE 1:200

LIST OF COORDINATES

LABEL \ STA		A1	M1	M2	M3	M4	P1	M5	M6	M7	P2	M8	M9	M10	P3	M11	M12	M13	M14	M15	P4
		0+316.0000	0+316.7500	0+321.5625	0+326.3750	0+331.1875	0+336.0000	0+341.0000	0+346.0000	0+351.0000	0+356.0000	0+361.0000	0+366.0000	0+371.0000	0+376.0000	0+380.7125	0+385.4250	0+390.1375	0+394.8500	0+395.2500	0+396.0000
CL	E	248626.7067	248627.4383	248632.1334	248636.8304	248641.5293	248646.2300	248651.1158	248656.0033	248660.8910	248665.7786	248670.6662	248675.5539	248680.4415	248685.3275	248689.9292	248694.5277	248699.1229	248703.7149	248704.1045	248704.8350
	N	9245839.9535	9245839.7881	9245838.7318	9245837.6839	9245836.6443	9245835.6131	9245834.5507	9245833.4958	9245832.4418	9245831.3878	9245830.3338	9245829.2798	9245828.2258	9245827.1639	9245826.1481	9245825.1179	9245824.0732	9245823.0141	9245822.9236	9245822.7535
	Z	8.8170	8.8522	9.0784	9.3046	9.5308	9.7570	9.9920	10.2270	10.4620	10.6970	10.9320	11.1667	11.3919	11.6031	11.7892	11.9630	12.1242	12.2730	12.2851	12.3074
L1	E	248626.6957	248627.4272	248632.1225	248636.8196	248641.5186	248646.2194	248651.1053	248655.9928	248660.8804	248665.7681	248670.6557	248675.5433	248680.4310	248685.3168	248689.9183	248694.5167	248699.1118	248703.7036	248704.0932	248704.8236
	N	9245839.9047	9245839.7393	9245838.6830	9245837.6351	9245836.5955	9245835.5643	9245834.5018	9245833.4469	9245832.3929	9245831.3389	9245830.2849	9245829.2309	9245828.1769	9245827.1150	9245826.0993	9245825.0691	9245824.0245	9245822.9654	9245822.8749	9245822.7048
	Z	9.6420	9.6772	9.9034	10.1296	10.3558	10.5820	10.8170	11.0520	11.2870	11.5220	11.7570	11.9917	12.2169	12.4281	12.6142	12.7880	12.9492	13.0980	13.1101	13.1324
L2	E	248626.5854	248627.3171	248632.0132	248636.7111	248641.4110	248646.1127	248650.9995	248655.8874	248660.7750	248665.6627	248670.5503	248675.4379	248680.3256	248685.2098	248689.8098	248694.4066	248699.0002	248703.5904	248703.9799	248704.7101
	N	9245839.4170	9245839.2516	9245838.1951	9245837.1470	9245836.1072	9245835.0758	9245834.0131	9245832.9582	9245831.9042	9245830.8502	9245829.7962	9245828.7422	9245827.6882	9245826.6266	9245825.6112	9245824.5814	9245823.5371	9245822.4784	9245822.3879	9245822.2179
	Z	8.8170	8.8522	9.0784	9.3046	9.5308	9.7570	9.9920	10.2270	10.4620	10.6970	10.9320	11.1667	11.3919	11.6031	11.7892	11.9630	12.1242	12.2730	12.2851	12.3074
GL	E	248626.1993	248626.9314	248631.6306	248636.3316	248641.0345	248645.7392	248650.6292	248655.5185	248660.4061	248665.2938	248670.1814	248675.0690	248679.9567	248684.8352	248689.4299	248694.0214	248698.6096	248703.1945	248703.5835	248704.3128
	N	9245837.7101	9245837.5446	9245836.4874	9245835.4386	9245834.3982	9245833.3661	9245832.3027	9245831.2475	9245830.1935	9245829.1395	9245828.0855	9245827.0315	9245825.9775	9245824.9172	9245823.9030	9245822.8743	9245821.8313	9245820.7738	9245820.6834	9245820.5136
	Z	8.7820	8.8172	9.0434	9.2696	9.4958	9.7220	9.9570	10.1920	10.4270	10.6620	10.8970	11.1317	11.3569	11.5681	11.7542	11.9280	12.0892	12.2380	12.2501	12.2724
CLR	E	248625.7029	248626.4356	248631.1387	248635.8436	248640.5504	248645.2591	248650.1531	248655.0442	248659.9318	248664.8195	248669.7071	248674.5947	248679.4824	248684.3537	248688.9415	248693.5260	248698.1073	248702.6854	248703.0738	248703.8020
	N	9245835.5156	9245835.3499	9245834.2919	9245833.2422	9245832.2009	9245831.1680	9245830.1037	9245829.0481	9245827.9941	9245826.9401	9245825.8861	9245824.8321	9245823.7781	9245822.7193	9245821.7066	9245820.6795	9245819.6380	9245818.5822	9245818.4919	9245818.3223
	Z	8.7370	8.7722	8.9984	9.2246	9.4508	9.6770	9.9120	10.1470	10.3820	10.6170	10.8520	11.0867	11.3119	11.5231	11.7092	11.8830	12.0442	12.1930	12.2051	12.2274
GR	E	248625.2064	248625.9398	248630.6468	248635.3556	248640.0664	248644.7789	248649.6770	248654.5699	248659.4575	248664.3452	248669.2328	248674.1204	248679.0081	248683.8722	248688.4530	248693.0307	248697.6051	248702.1762	248702.5641	248703.2912
	N	9245833.3210	9245833.1552	9245832.0963	9245831.0457	9245830.0036	9245828.9698	9245827.9046	9245826.8486	9245825.7946	9245824.7406	9245823.6866	9245822.6326	9245821.5786	9245820.5214	9245819.5103	9245818.4847	9245817.4448	9245816.3905	9245816.3004	9245816.1311
	Z	8.6920	8.7272	8.9534	9.1796	9.4058	9.6320	9.8670	10.1020	10.3370	10.5720	10.8070	11.0417	11.2669	11.4781	11.6642	11.8380	11.9992	12.1480	12.1601	12.1824
R2	E	248624.8203	248625.5542	248630.2642	248634.9761	248639.6899	248644.4055	248649.3068	248654.2010	248659.0886	248663.9763	248668.8639	248673.7515	248678.6392	248683.4977	248688.0731	248692.6454	248697.2145	248701.7803	248702.1677	248702.8940
	N	9245831.6142	9245831.4483	9245830.3886	9245829.3374	9245828.2945	9245827.2601	9245826.1943	9245825.1379	9245824.0839	9245823.0299	9245821.9759	9245820.9219	9245819.8679	9245818.8120	9245817.8020	9245816.7777	9245815.7390	9245814.6859	9245814.5959	9245814.4267
	Z	8.6570	8.6922	8.9184	9.1446	9.3708	9.5970	9.8320	10.0670	10.3020	10.5370	10.7720	11.0067	11.2319	11.4431	11.6292	11.8030	11.9642	12.1130	12.1251	12.1474
R1	E	248624.7100	248625.4440	248630.1549	248634.8677	248639.5823	248644.2988	248649.2010	248654.0956	248658.9832	248663.8709	248668.7585	248673.6461	248678.5338	248683.3906	248687.9546	248692.5354	248697.1029	248701.6671	248702.0544	248702.7805
	N	9245831.1265	9245830.9605	9245829.9007	9245828.8493	9245827.8062	9245826.7716	9245825.7056	9245824.6492	9245823.5952	9245822.5412	9245821.4872	9245820.4332	9245819.3792	9245818.3236	9245817.3139	9245816.2899	9245815.2516	9245814.1989	9245814.1089	9245813.9398
	Z	9.4820	9.5172	9.7434	9.9696	10.1958	10.4220	10.6570	10.8920	11.1270	11.3620	11.5970	11.8317	12.0569	12.2681	12.4542	12.6280	12.7892	12.9380	12.9501	12.9724

JICA JAPAN INTERNATIONAL COOPERATION AGENCY	DESIGNED BY	CHECKED BY	SUBMITTED BY	REPUBLIC OF INDONESIA MINISTRY OF PUBLIC WORKS DIRECTORATE GENERAL OF HIGHWAYS	PROJECT AND LOCATION :	SCALE :	DRAWING TITLE :	DRAWING NO :
KATAHIRA & ENGINEERS INTERNATIONAL	Name: H. HONDA	Name: T. OKUMURA	Name: M. KIUCHI		DETAILED DESIGN STUDY OF NORTH JAVA CORRIDOR FLYOVER PROJECT GEBANG FLYOVER - CONTRACT PACKAGE 2 (NAGREG - GEBANG) WEST JAVA PROVINCE	1 : 200 1 : 100	DIMENSION PLAN OF PC SUPERSTRUCTURE P12 - P14	GCR-002
	Sign	Sign	Sign	APPROVED BY: Ir. HERRY VAZA M,Eng.Sc		FULL SIZE A3		SHEET NO : 02 / 20
	Date	Date	Date	NIP. : 110038400 Sign / Date				

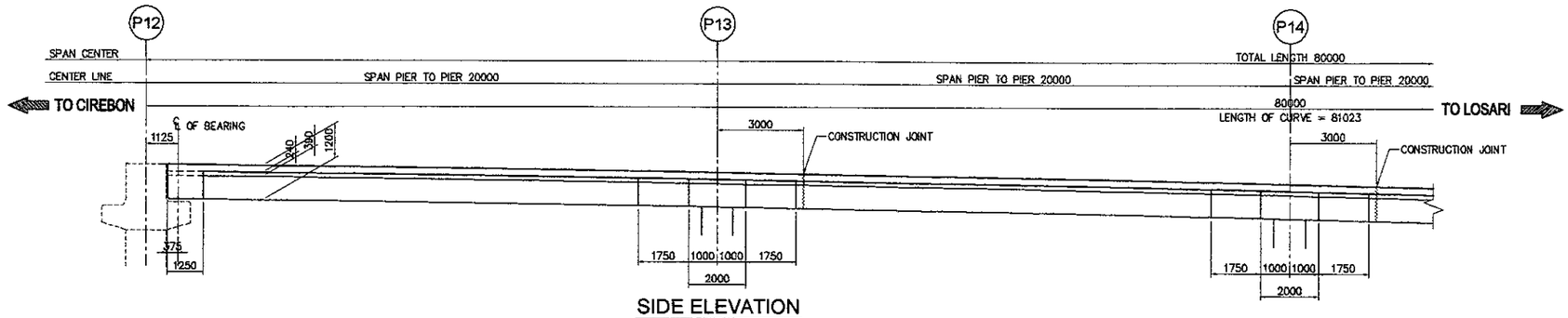

SIDE ELEVATION

SCALE 1 : 200

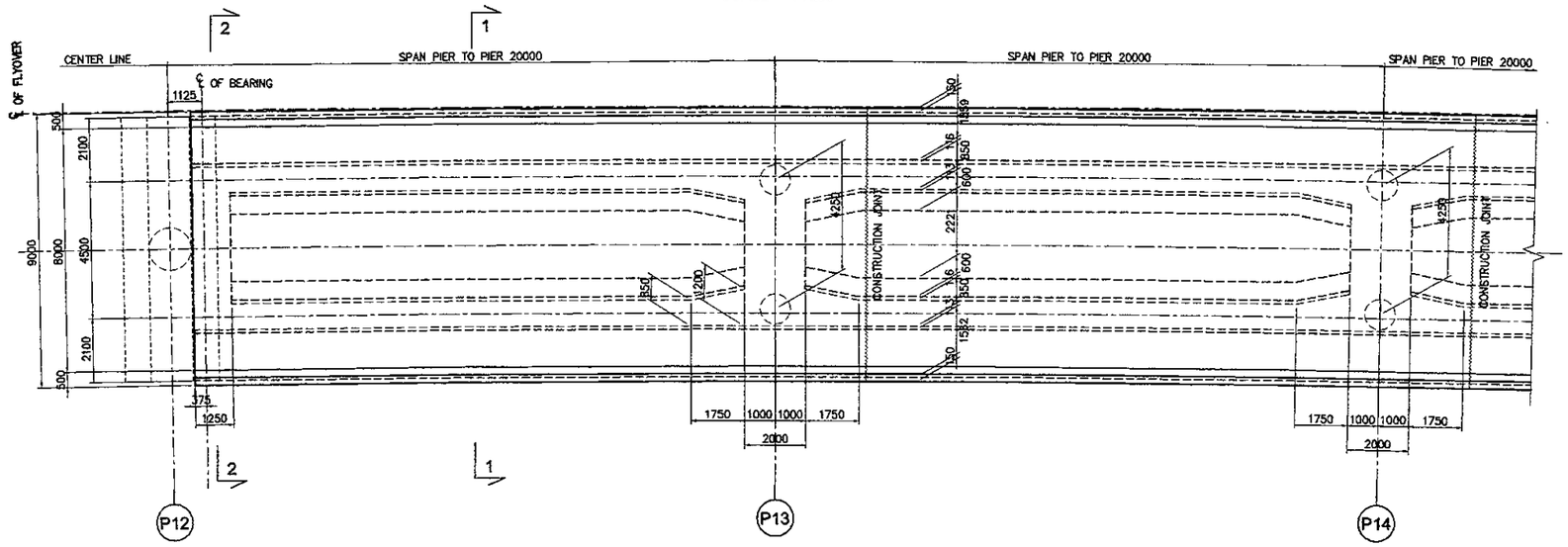

P L A N

SCALE 1 : 200

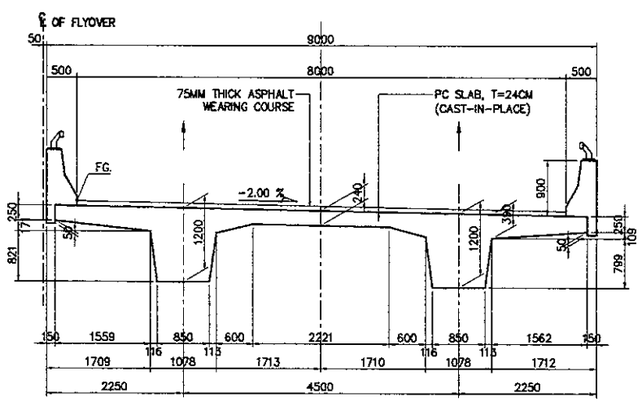

SECTION 1-1

SCALE 1 : 100

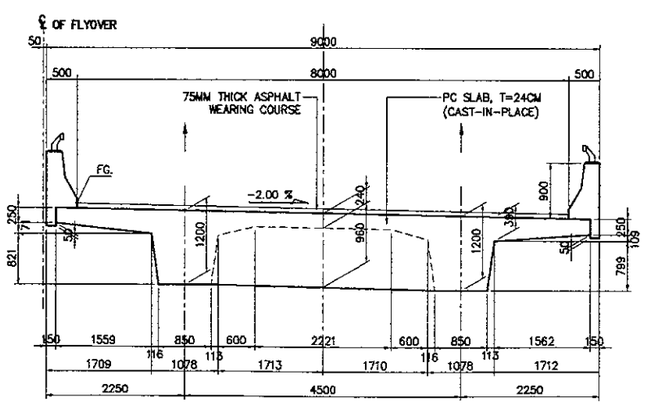

SECTION 2-2

SCALE 1 : 100

NOTES :

1. All dimension are in mm unless noted otherwise.
2. Concrete Girder and Slab fc'= 35 MPa.
3. All Reinforcing steel shall be BJTD 40 or ASTM A615 Grade 60 deformed bars.
4. The Contractor shall be responsible to carry out the following before Construction :
   a) Verification of all elevations and dimensions, using actual field survey.
   b) Preparation and submission of shop drawings for all bridge components for the Engineer's approval.

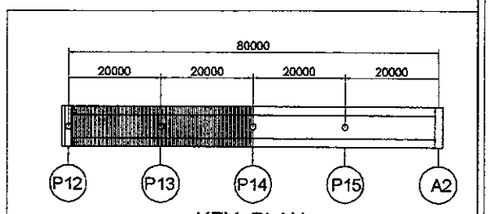

KEY PLAN

JAPAN INTERNATIONAL COOPERATION AGENCY KATAHIRA & ENGINEERS INTERNATIONAL	DESIGNED BY	CHECKED BY	SUBMITTED BY	REPUBLIC OF INDONESIA MINISTRY OF PUBLIC WORKS DIRECTORATE GENERAL OF HIGHWAYS	PROJECT AND LOCATION :	SCALE :	DRAWING TITLE :	DRAWING NO :
	Name: H. HONDA	Name: T. OKUMURA	Name: M. KIUCHI		DETAILED DESIGN STUDY OF NORTH JAVA CORRIDOR FLYOVER PROJECT GEBANG FLYOVER - CONTRACT PACKAGE 2 (NAGREG - GEBANG) WEST JAVA PROVINCE	1 : 200 1 : 100	DIMENSION PLAN OF PC SUPERSTRUCTURE P14 - A2	GCR-003
	Sign	Sign	Sign	APPROVED BY: Ir. HERRY VAZA M,Eng.Sc NIP. : 110038400				SHEET NO :
	Date	Date	Date	Sign / Date		FULL SIZE A3		03 / 20

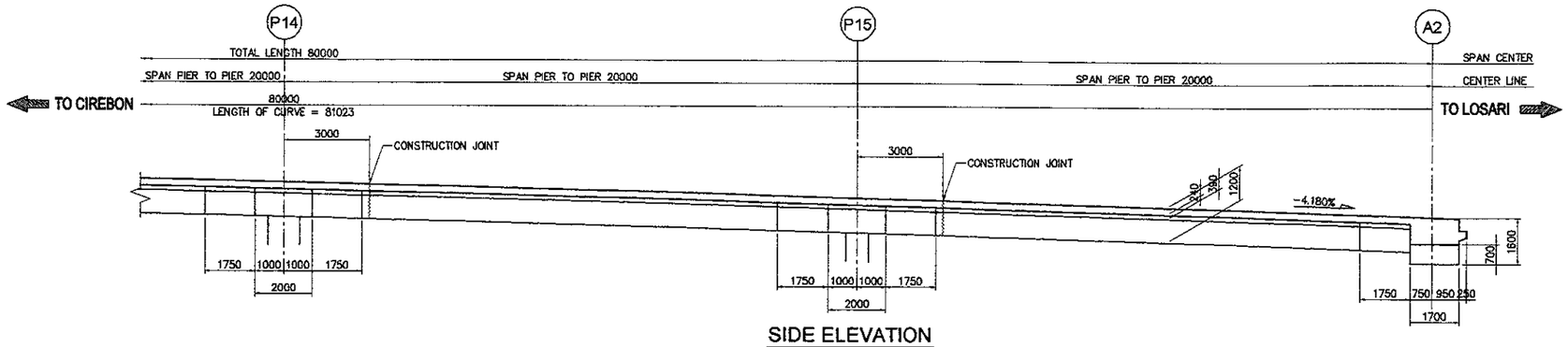

SIDE ELEVATION
SCALE 1 : 200

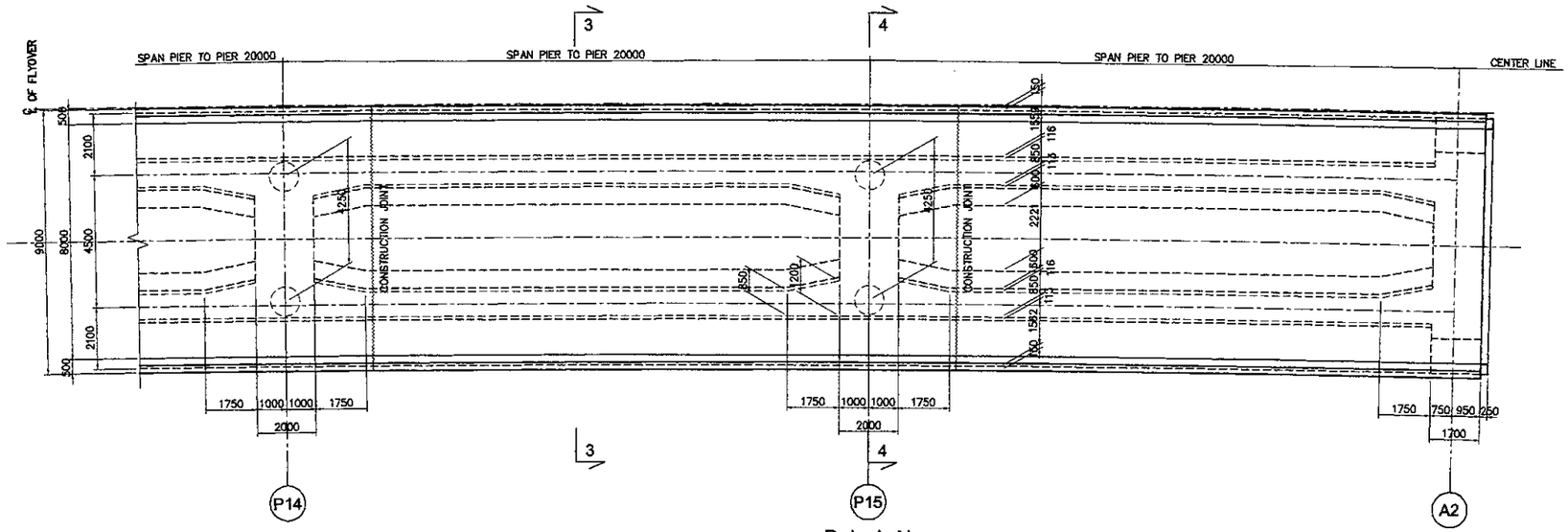

P L A N
SCALE 1 : 200

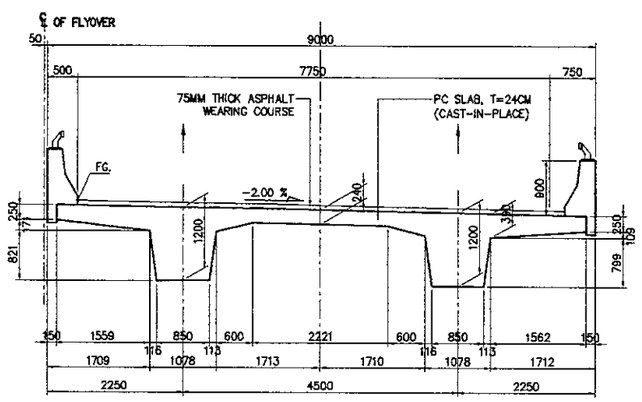

SECTION 3-3
SCALE 1 : 100

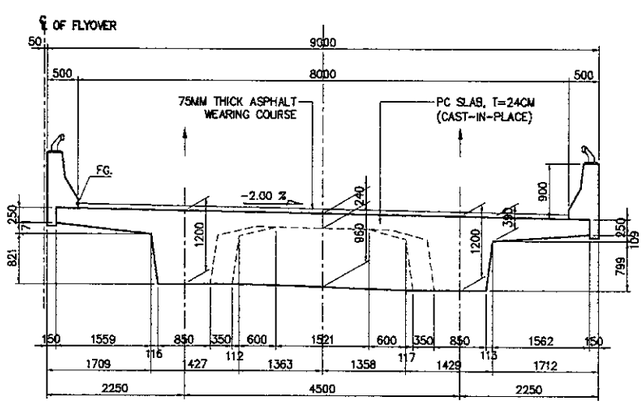

SECTION 4-4
SCALE 1 : 100

NOTES :

1. All dimension are in mm unless noted otherwise.
2. Concrete Girder and Slab fc'= 35 MPa.
3. All Reinforcing steel shall be BJTD 40 or ASTM A615 Grade 60 deformed bars.
4. The Contractor shall be responsible to carry out the following before Construction :
   a) Verification of all elevations and dimensions, using actual field survey.
   b) Preparation and submission of shop drawings for all bridge components for the Engineer's approval.

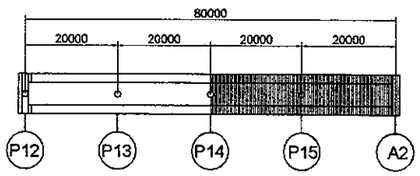

KEY PLAN

JICA JAPAN INTERNATIONAL COOPERATION AGENCY / KEI KATAHIRA & ENGINEERS INTERNATIONAL	DESIGNED BY	CHECKED BY	SUBMITTED BY	REPUBLIC OF INDONESIA MINISTRY OF PUBLIC WORKS DIRECTORATE GENERAL OF HIGHWAYS	PROJECT AND LOCATION :	SCALE :	DRAWING TITLE :	DRAWING NO :
	Name: H. HONDA	Name: T. OKUMURA	Name: M. KIUCHI		DETAILED DESIGN STUDY OF NORTH JAVA CORRIDOR FLYOVER PROJECT GEBANG FLYOVER - CONTRACT PACKAGE 2 (NAGREG - GEBANG) WEST JAVA PROVINCE	1 : 50	TYPICAL CROSS SECTION P12 - A2	GCR-004
	Sign	Sign	Sign	APPROVED BY: Ir. HERRY VAZA M,Eng.Sc				SHEET NO :
	Date	Date	Date	NIP. : 110038400 / Sign / Date		FULL SIZE A3		04 / 20

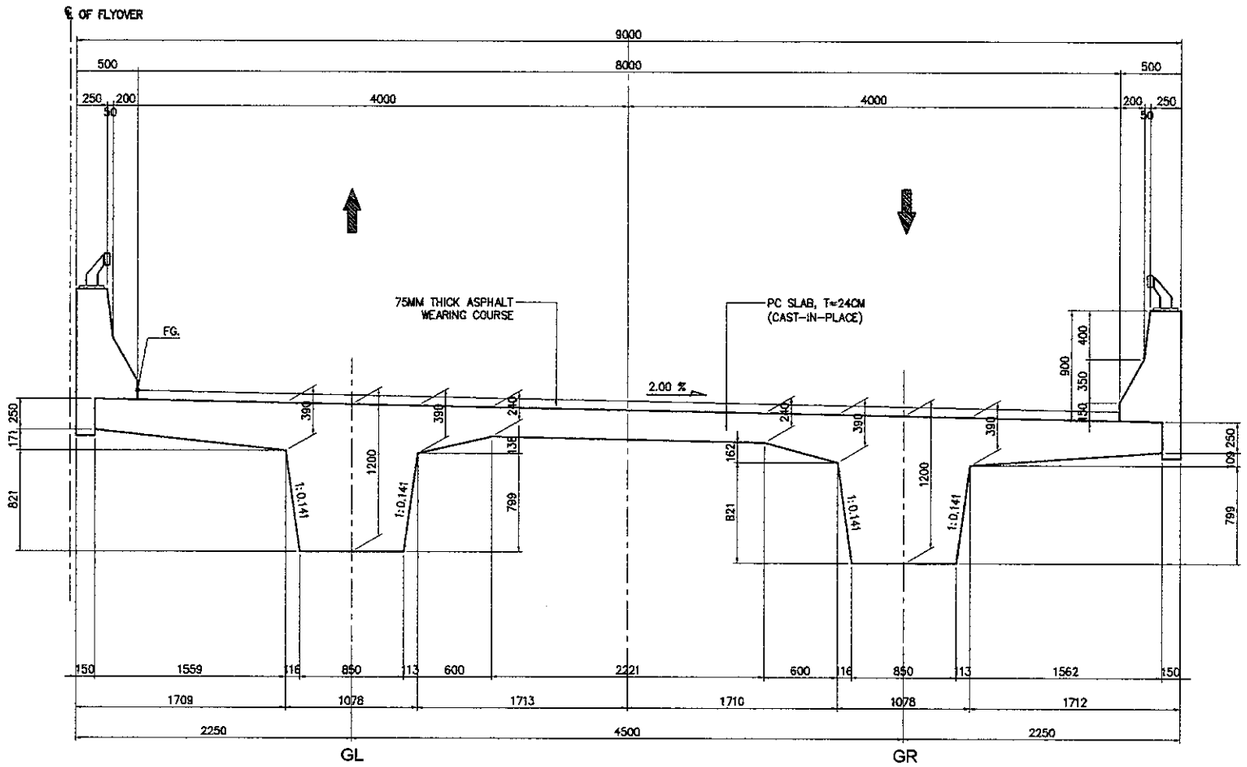

INFORMATION OF PC SUPERSTUCTURE

	P12'	P13	P14	P15	A2
FG.	11.585	11.342	10.957	10.442	9.795
Super Elev. GL	−2.000%	−2.000%	−2.000%	−2.000%	−2.000%
Super Elev. GR	2.000%	2.000%	2.000%	2.000%	2.000%
Top Slab Girder GL	11.447	11.204	10.819	10.304	9.657
Top Slab Girder GR	11.574	11.331	10.946	10.431	9.784
Bottom GL	9.772	9.929	9.544	9.029	8.382
Bottom GR	9.899	10.056	9.746	9.231	8.509
Station	0+622.125	0+641.000	0+661.000	0+681.000	0+701.000

TYPICAL CROSS SECTION
(Span Length = 20 M)

SCALE : 1 : 50

JICA JAPAN INTERNATIONAL COOPERATION AGENCY / KEI KATAHIRA & ENGINEERS INTERNATIONAL	DESIGNED BY	CHECKED BY	SUBMITTED BY	REPUBLIC OF INDONESIA MINISTRY OF PUBLIC WORKS DIRECTORATE GENERAL OF HIGHWAYS	PROJECT AND LOCATION :	SCALE :	DRAWING TITLE :	DRAWING NO :
	Name: H. HONDA	Name: T. OKUMURA	Name: M. KIUCHI		DETAILED DESIGN STUDY OF NORTH JAVA CORRIDOR FLYOVER PROJECT GEBANG FLYOVER - CONTRACT PACKAGE 2 (NAGREG - GEBANG) WEST JAVA PROVINCE	1 : 200 / 1 : 100	ARRANGEMENT OF PC CABLES P12-P14	GCR-005
	Sign	Sign	Sign	APPROVED BY: Ir. HERRY VAZA M,Eng.Sc				SHEET NO :
	Date	Date	Date	NIP. : 110038400 / Sign / Date		FULL SIZE A3		05 / 20

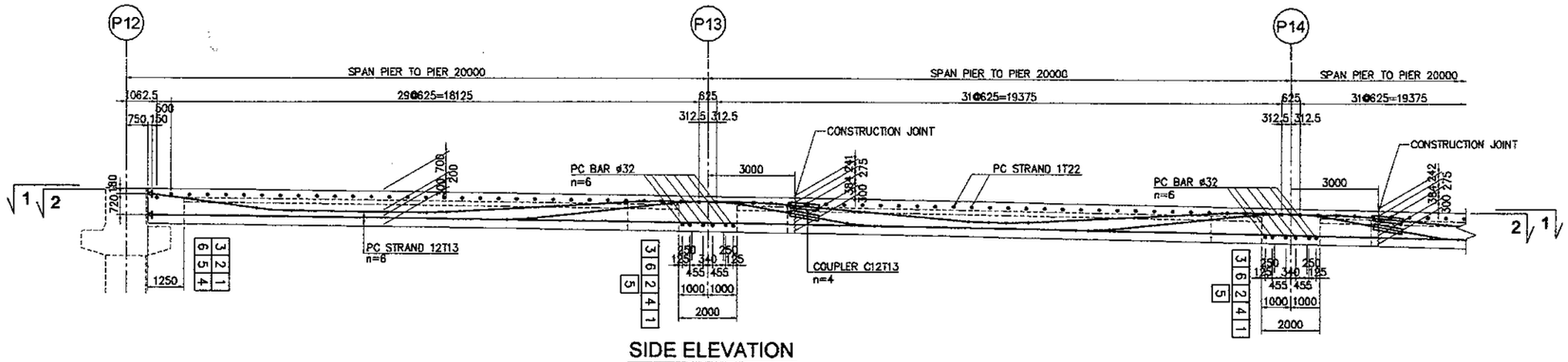

SIDE ELEVATION

SCALE 1 : 200

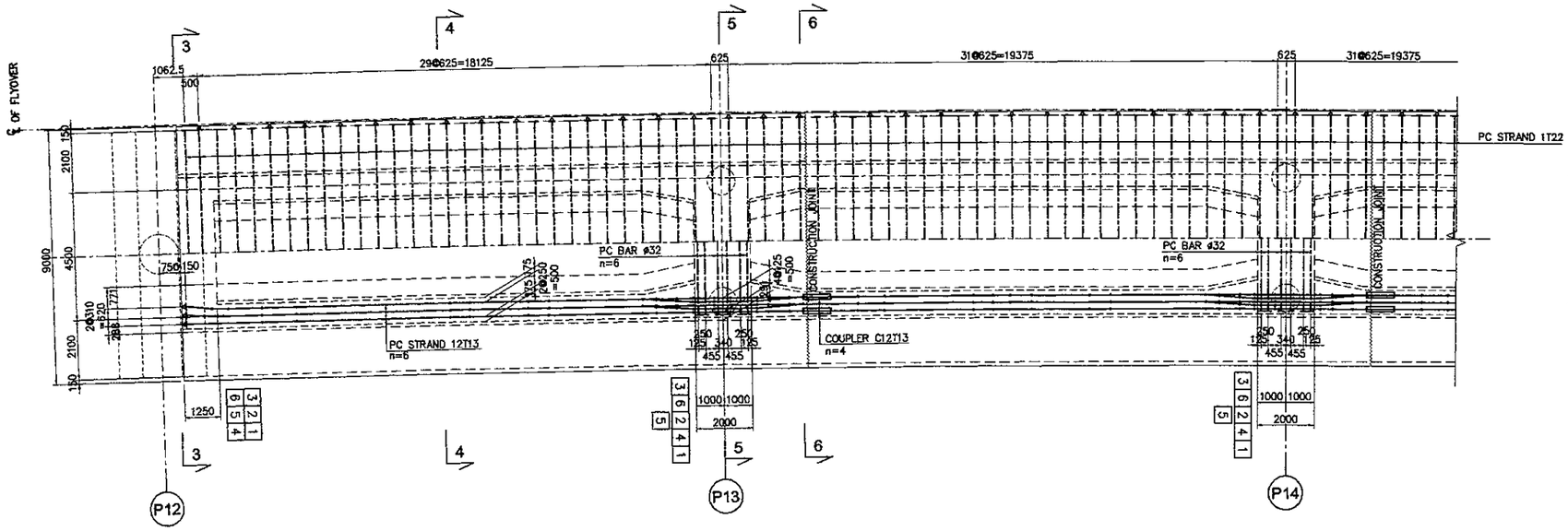

SECTION 1-1

SCALE 1 : 200

SECTION 2-2

SCALE 1 : 200

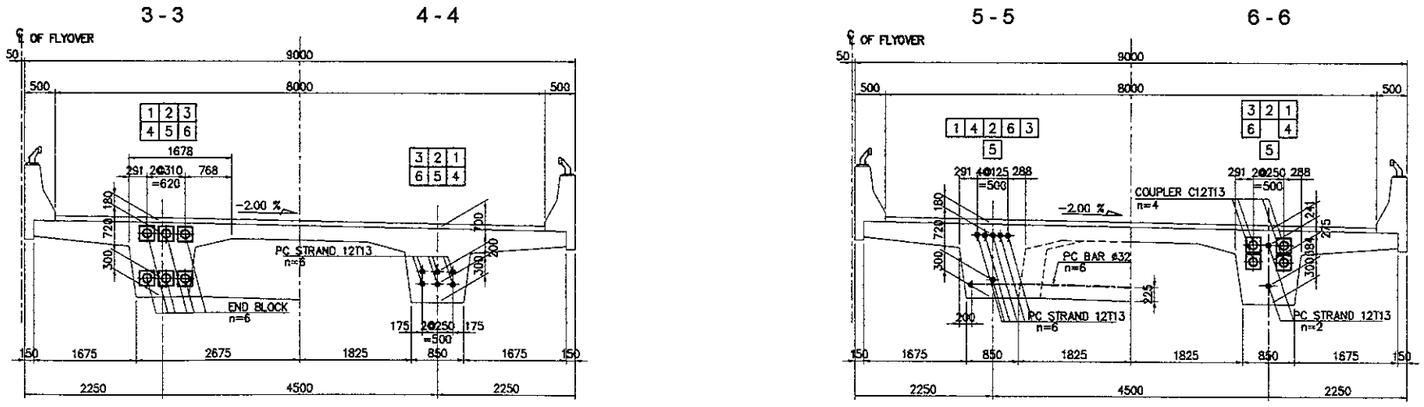

CROSS SECTION

SCALE 1 : 100

NOTES :

1. All dimension are in mm unless noted otherwise.
2. Prestressing Tendon Shall be 12T13 (7 WIRE STRAND).
   . Nominal Diameter 12.7mm.
3. Shows Bending Point Of Prestressing Cable.

Stressing Anchorage

Dead End Anchorage

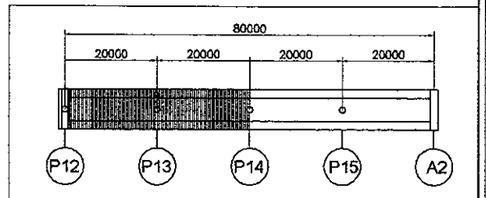

KEY PLAN

JICA JAPAN INTERNATIONAL COOPERATION AGENCY / KEI KATAHIRA & ENGINEERS INTERNATIONAL	DESIGNED BY	CHECKED BY	SUBMITTED BY	REPUBLIC OF INDONESIA MINISTRY OF PUBLIC WORKS DIRECTORATE GENERAL OF HIGHWAYS	PROJECT AND LOCATION :	SCALE :	DRAWING TITLE :	DRAWING NO :
	Name: H. HONDA	Name: T. OKUMURA	Name: M. KIUCHI		DETAILED DESIGN STUDY OF NORTH JAVA CORRIDOR FLYOVER PROJECT GEBANG FLYOVER - CONTRACT PACKAGE 2 (NAGREG - GEBANG) WEST JAVA PROVINCE	1 : 200 1 : 100	ARRANGEMENT OF PC CABLES P14-A2	GCR-006
	Sign	Sign	Sign	APPROVED BY: Ir. HERRY VAZA M,Eng.Sc				SHEET NO :
	Date	Date	Date	NIP. : 110038400 / Sign / Date		FULL SIZE A3		06 / 20

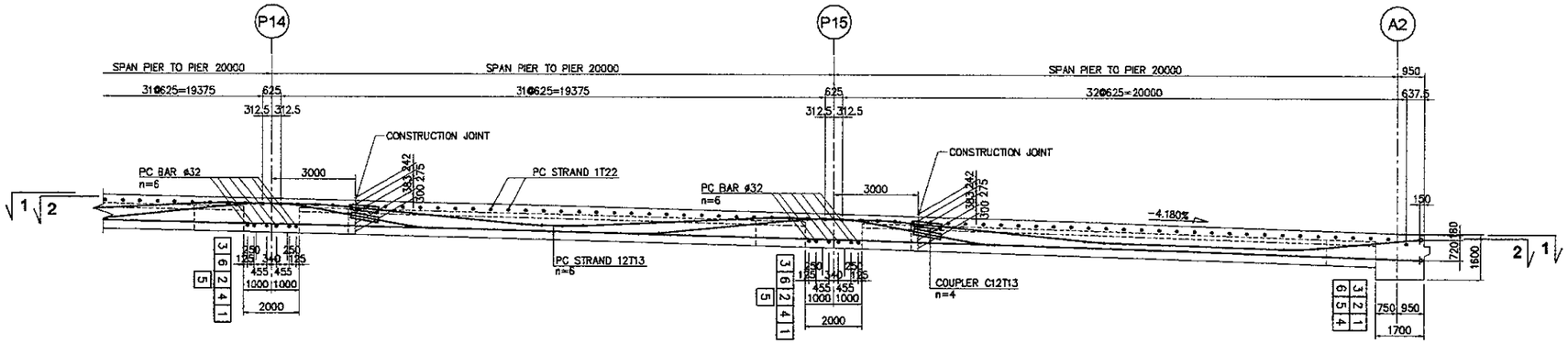

SIDE ELEVATION

SCALE 1 : 200

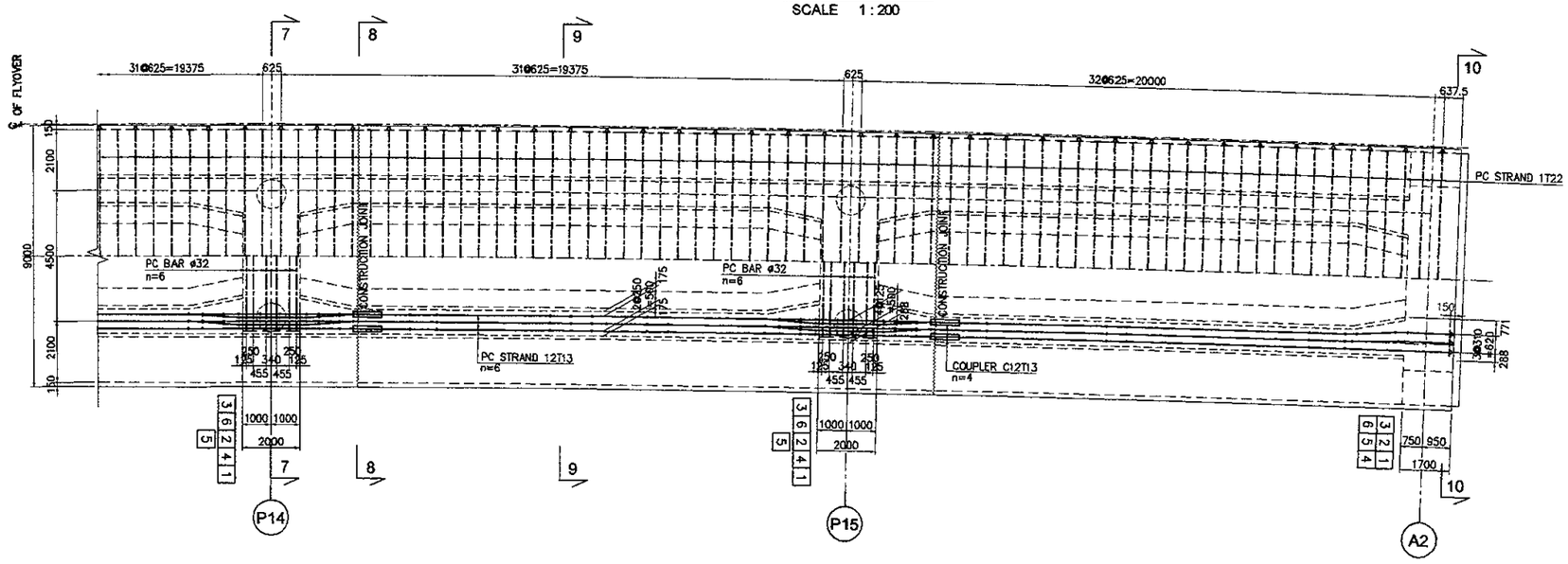

SECTION 1-1

SCALE 1 : 200

SECTION 2-2

SCALE 1 : 200

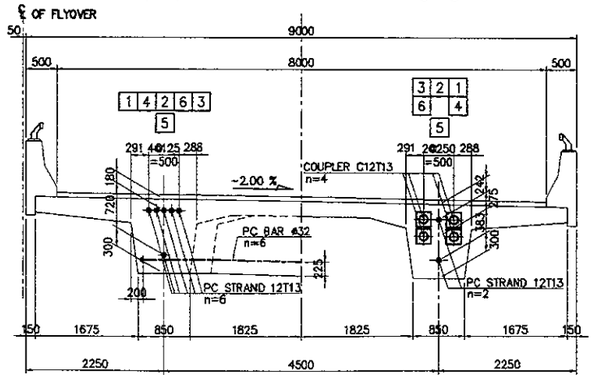

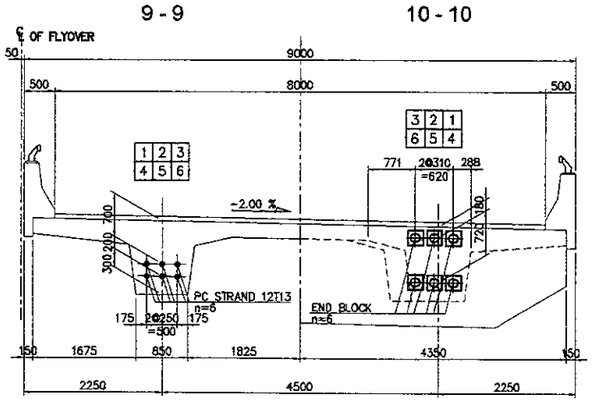

CROSS SECTION

SCALE 1 : 100

NOTES :

1. All dimension are in mm unless noted otherwise.
2. Prestressing Tendon Shall be 12T13 (7 WIRE STRAND).
   . Nominal Diameter 12.7mm.
3. Shows Bending Point Of Prestressing Cable.

Stressing Anchorage

Dead End Anchorage

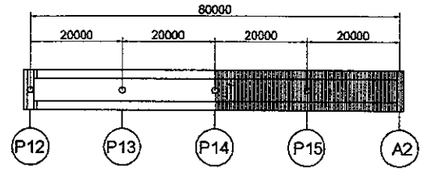

KEY PLAN

JICA JAPAN INTERNATIONAL COOPERATION AGENCY / KEI KATAHIRA & ENGINEERS INTERNATIONAL	DESIGNED BY	CHECKED BY	SUBMITTED BY	REPUBLIC OF INDONESIA MINISTRY OF PUBLIC WORKS DIRECTORATE GENERAL OF HIGHWAYS	PROJECT AND LOCATION :	SCALE :	DRAWING TITLE :	DRAWING NO :
	Name: H. HONDA	Name: T. OKUMURA	Name: M. KIUCHI		DETAILED DESIGN STUDY OF NORTH JAVA CORRIDOR FLYOVER PROJECT GEBANG FLYOVER - CONTRACT PACKAGE 2 (NAGREG - GEBANG) WEST JAVA PROVINCE	1 : 50 / 1 : 300	ARRANGEMENT OF PC CABLES P12 - A2	GCR-007
	Sign	Sign	Sign	APPROVED BY: Ir. HERRY VAZA M,Eng.Sc				SHEET NO :
	Date	Date	Date	NIP. : 110038400 / Sign / Date		FULL SIZE A3		07 / 20

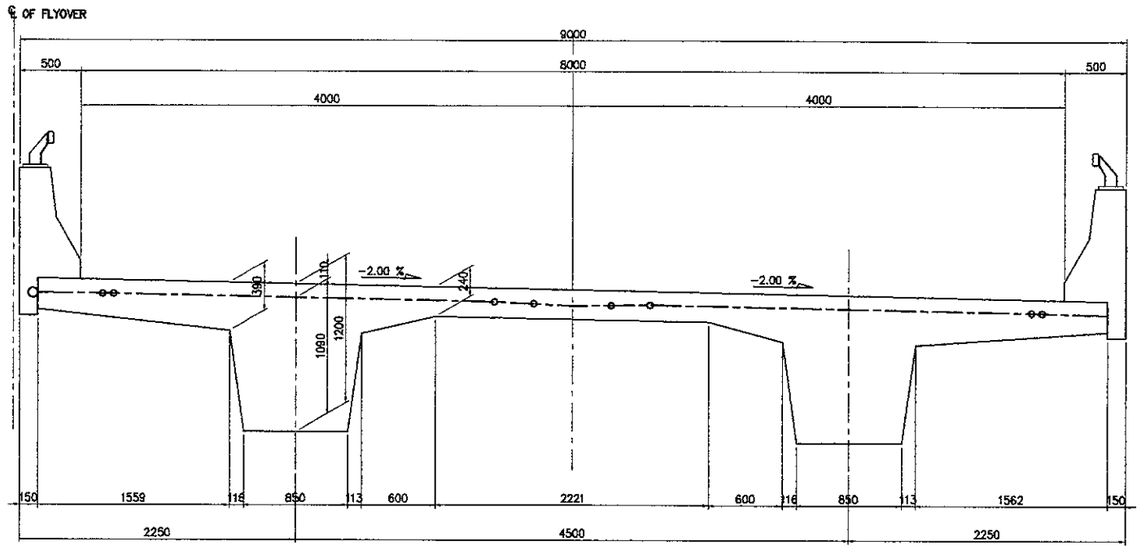

TRANVERSAL PC CABLE

SCALE 1 : 50

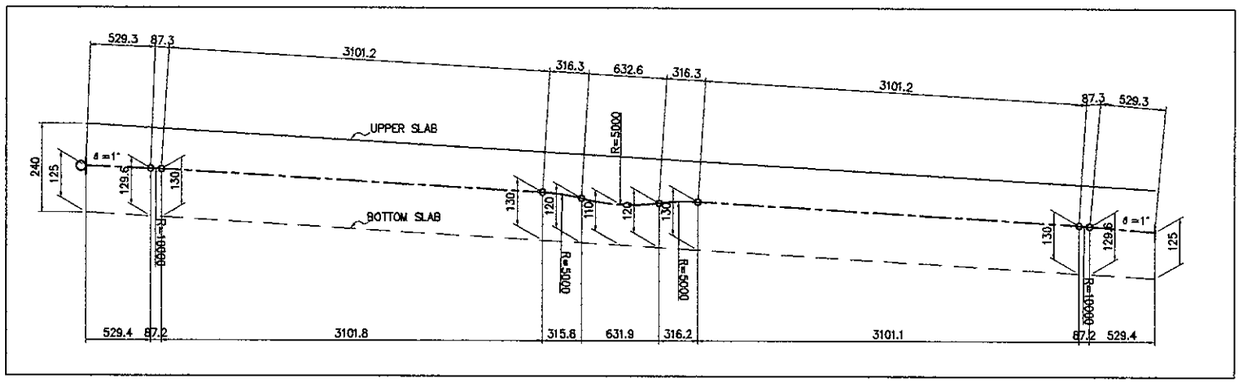

PC CABLE PROFILE

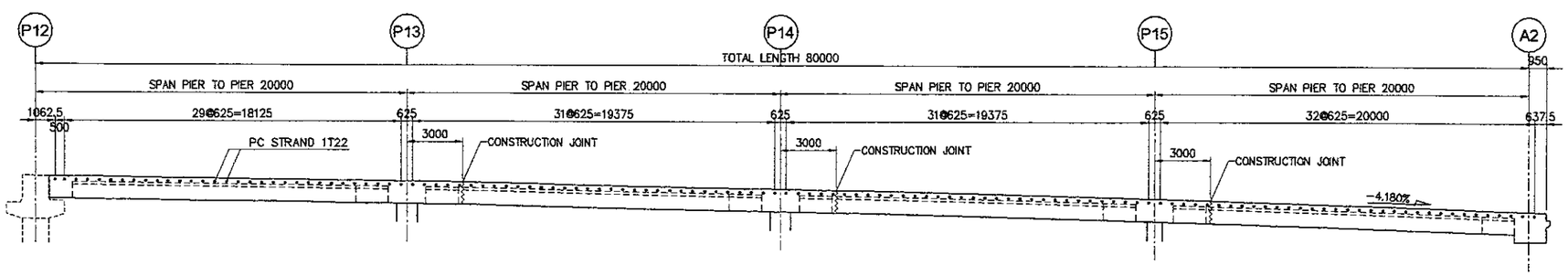

LONGITUDINAL PC CABLE ARRANGEMENT

SCALE 1 : 300

TABEL OF PC CABLES

Length (m)	Nos.	Unit Weight (kg/m)	Weight / 1 nos (kg)	Weight (kg)	Remarks
8.700	128	2.482	21.59	2,763.96	Stressing Anchorage One Side Staggered
TOTAL LENGTH (L) =			1,113.60	m	
TOTAL WEIGHT (W) =			2,763.96	kg	

NOTES :

1. All dimension are in mm unless noted otherwise.
2. Shows Bending Point Of Prestressing Cable.

Stressing Anchorage

Dead End Anchorage

JAPAN INTERNATIONAL COOPERATION AGENCY KATAHIRA & ENGINEERS INTERNATIONAL	DESIGNED BY	CHECKED BY	SUBMITTED BY	REPUBLIC OF INDONESIA MINISTRY OF PUBLIC WORKS DIRECTORATE GENERAL OF HIGHWAYS	PROJECT AND LOCATION :	SCALE :	DRAWING TITLE :	DRAWING NO :
	Name: H. HONDA	Name: T. OKUMURA	Name: M. KIUCHI		DETAILED DESIGN STUDY OF NORTH JAVA CORRIDOR FLYOVER PROJECT GEBANG FLYOVER - CONTRACT PACKAGE 2 (NAGREG - GEBANG) WEST JAVA PROVINCE	-	PC CABLES SCHEDULE P12 - A2	GCR-008
	Sign:	Sign:	Sign:	APPROVED BY: Ir. HERRY VAZA M,Eng.Sc NIP. : 110038400		FULL SIZE A3		SHEET NO : 08 / 20
	Date:	Date:	Date:	Sign: / Date:				

CONSTRUCTION SECTION NO.1 (C1 & C3)

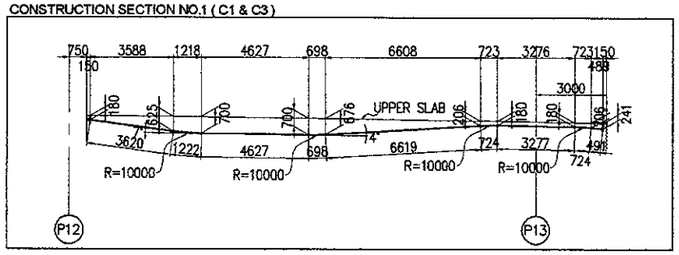

CONSTRUCTION SECTION NO.2 (C1 & C3)

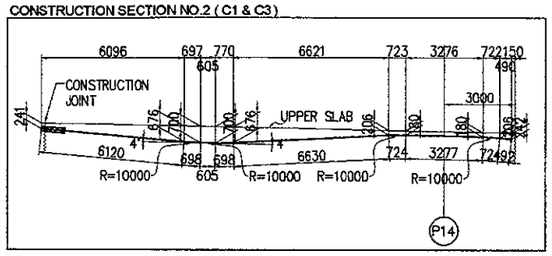

CONSTRUCTION SECTION NO.3 (C1 & C3)

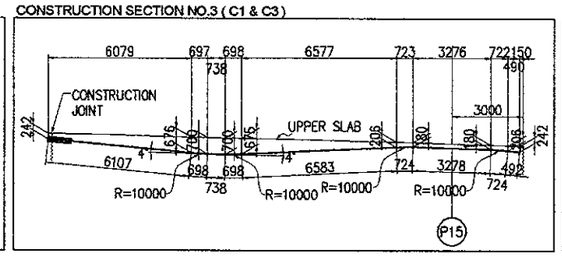

CONSTRUCTION SECTION NO.4 (C1 & C3)

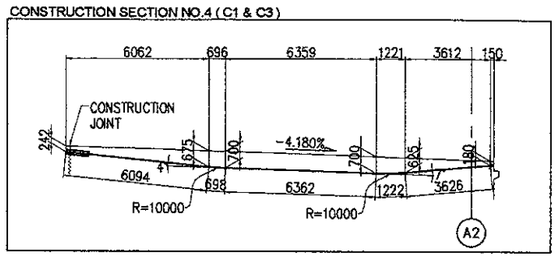

AFTER COMPLETION GIRDER (C2)

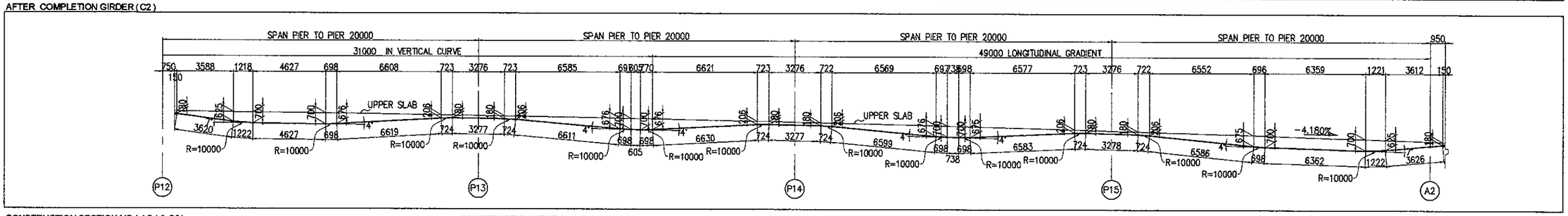

CONSTRUCTION SECTION NO.1 (C4 & C6)

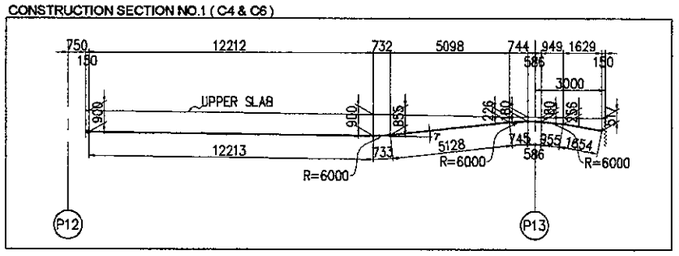

CONSTRUCTION SECTION NO.2 (C4 & C6)

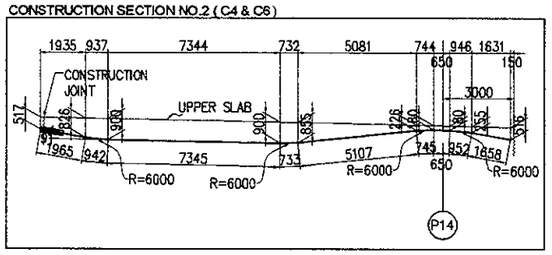

CONSTRUCTION SECTION NO.3 (C4 & C6)

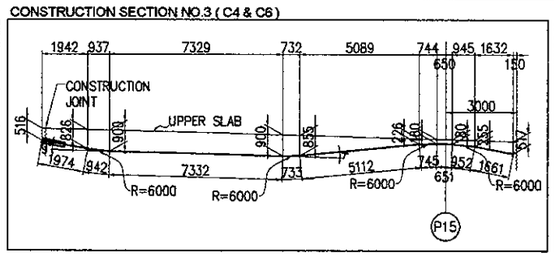

CONSTRUCTION SECTION NO.4 (C4 & C6)

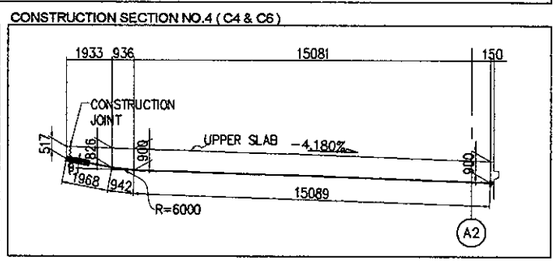

AFTER COMPLETION GIRDER (C5)

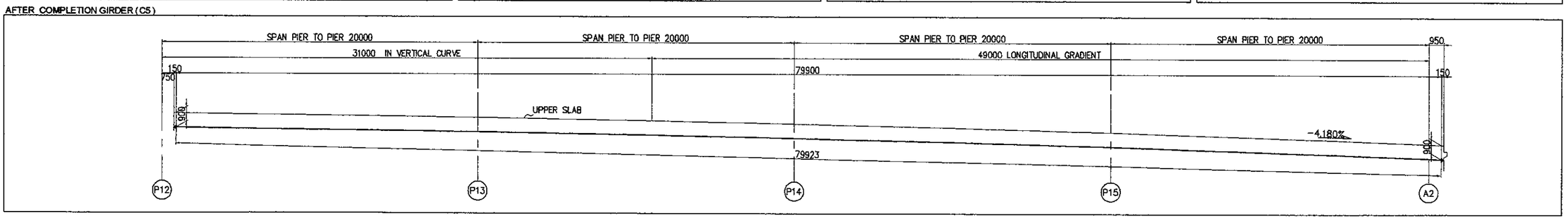

PC TENDONS SCHEDULE P12 - A2

SCALE : NON

NOTES :

1. All dimension are in mm unless noted otherwise.
2. Prestressing Tendon Shall be 12T13 (7 WIRE STRAND).
   . Nominal Diameter 12.7mm.
3. Shows Bending Point Of Prestressing Cable.

Stressing Anchorage

Dead End Anchorage

JICA JAPAN INTERNATIONAL COOPERATION AGENCY / KEI KATAHIRA & ENGINEERS INTERNATIONAL	DESIGNED BY	CHECKED BY	SUBMITTED BY	REPUBLIC OF INDONESIA MINISTRY OF PUBLIC WORKS DIRECTORATE GENERAL OF HIGHWAYS	PROJECT AND LOCATION :	SCALE :	DRAWING TITLE :	DRAWING NO :
	Name: H. HONDA	Name: T. OKUMURA	Name: M. KIUCHI		DETAILED DESIGN STUDY OF NORTH JAVA CORRIDOR FLYOVER PROJECT GEBANG FLYOVER - CONTRACT PACKAGE 2 (NAGREG - GEBANG) WEST JAVA PROVINCE	1 : 30	TYPICAL DETAIL OF CROSS SECTION REINFORCEMENT P12-A2	GCR-009
	Sign	Sign	Sign	APPROVED BY: Ir. HERRY VAZA M,Eng.Sc; NIP. : 110038400		FULL SIZE A3		SHEET NO : 09 / 20
	Date	Date	Date	Sign / Date				

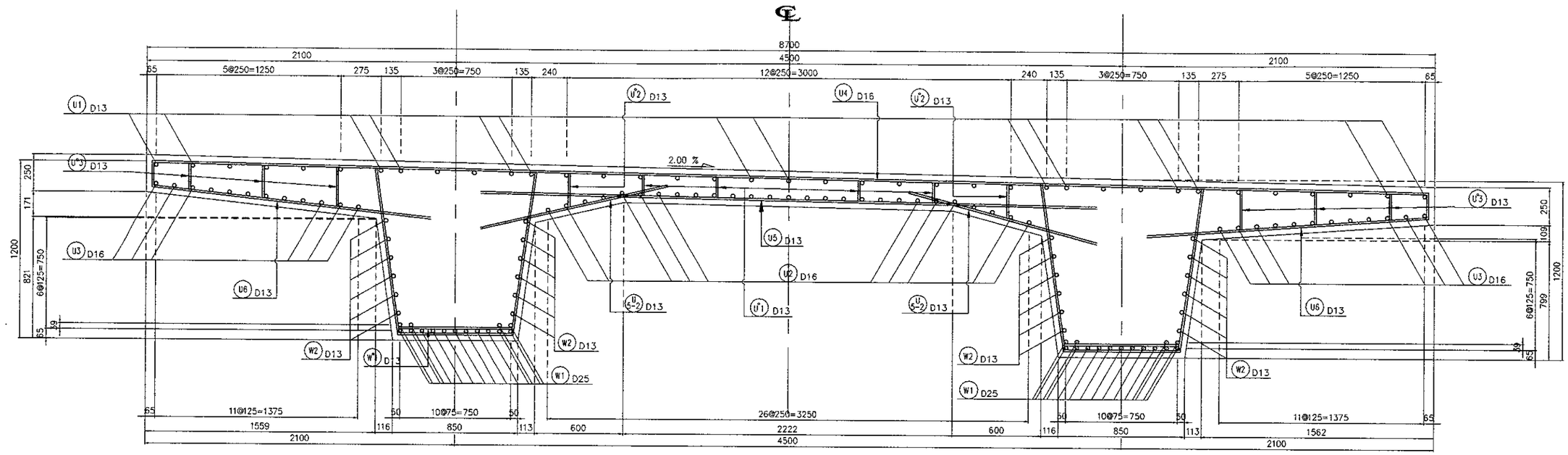

SECTION AT MID SPAN

SCALE 1:30

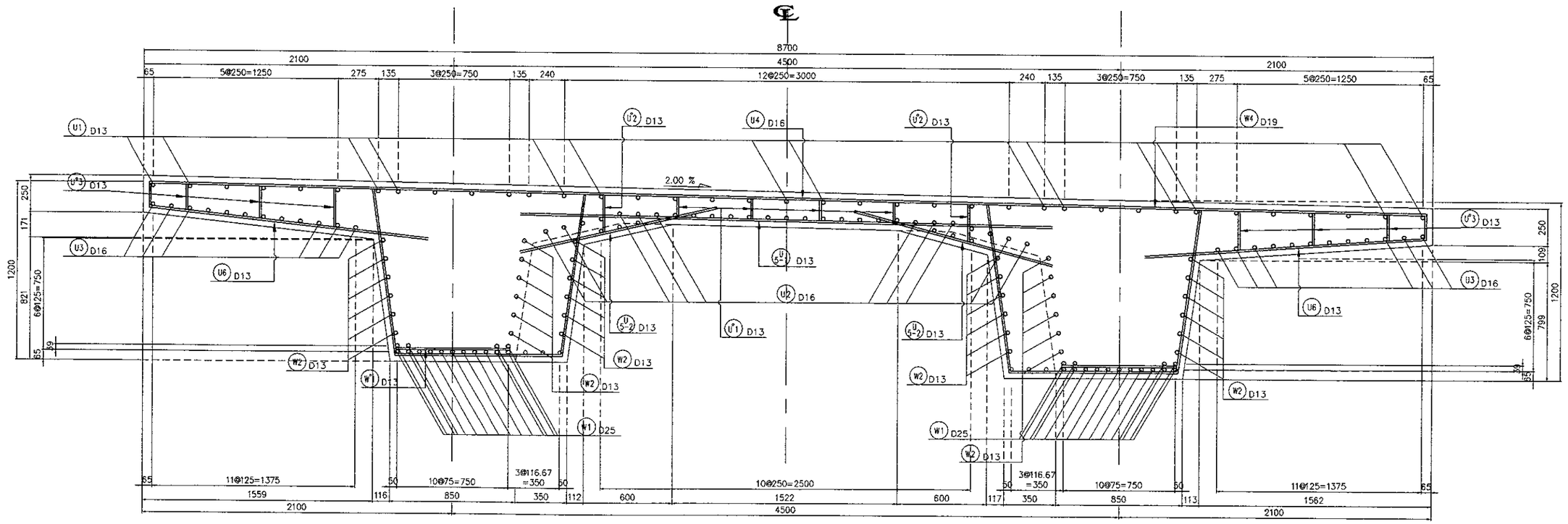

SECTION AT PIER

SCALE 1:30

JICA JAPAN INTERNATIONAL COOPERATION AGENCY / KATAHIRA & ENGINEERS INTERNATIONAL	DESIGNED BY	CHECKED BY	SUBMITTED BY	REPUBLIC OF INDONESIA MINISTRY OF PUBLIC WORKS DIRECTORATE GENERAL OF HIGHWAYS	PROJECT AND LOCATION :	SCALE :	DRAWING TITLE :	DRAWING NO :
	Name: H. HONDA	Name: T. OKUMURA	Name: M. KIUCHI		DETAILED DESIGN STUDY OF NORTH JAVA CORRIDOR FLYOVER PROJECT GEBANG FLYOVER - CONTRACT PACKAGE 2 (NAGREG - GEBANG) WEST JAVA PROVINCE	1 : 200	ARRANGEMENT OF REINFORCEMENT FOR PC GIRDER P12 - P14	GCR-010
	Sign	Sign	Sign	APPROVED BY: Ir. HERRY VAZA M,Eng.Sc				SHEET NO :
	Date	Date	Date	NIP. : 110038400 / Sign / Date		FULL SIZE A3		10 / 20

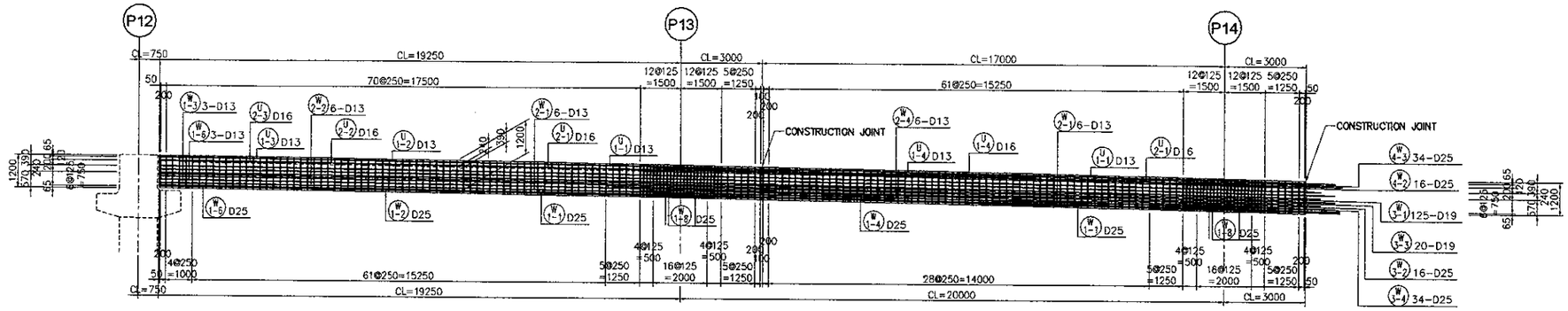

SECTION SPAN P12-P14

SCALE : 1 : 200

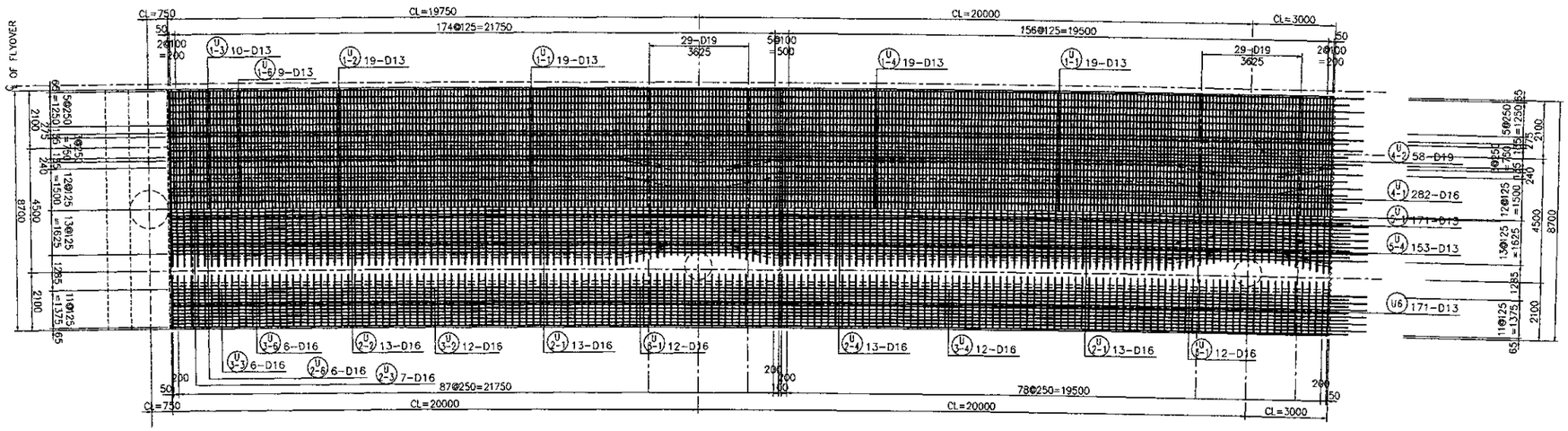

SECTION TOP SLAB

SCALE : 1 : 200

SECTION BOTTOM SLAB

SCALE : 1 : 200

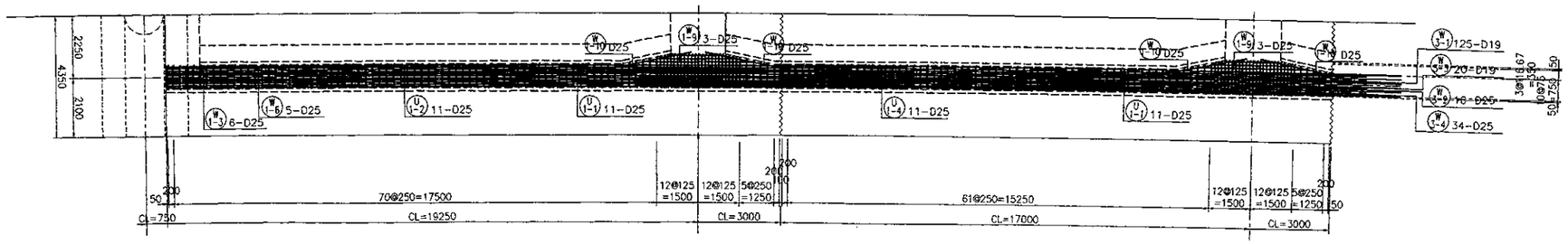

SECTION BOTTOM GIRDER

SCALE : 1 : 200

JICA JAPAN INTERNATIONAL COOPERATION AGENCY / KATAHIRA & ENGINEERS INTERNATIONAL	DESIGNED BY	CHECKED BY	SUBMITTED BY	REPUBLIC OF INDONESIA MINISTRY OF PUBLIC WORKS DIRECTORATE GENERAL OF HIGHWAYS	PROJECT AND LOCATION :	SCALE :	DRAWING TITLE :	DRAWING NO :
	Name: H. HONDA	Name: T. OKUMURA	Name: M. KIUCHI		DETAILED DESIGN STUDY OF NORTH JAVA CORRIDOR FLYOVER PROJECT GEBANG FLYOVER - CONTRACT PACKAGE 2 (NAGREG - GEBANG) WEST JAVA PROVINCE	1 : 200	ARRANGEMENT REINFORCEMENT FOR PC GIRDER P14 - A2	GCR-011
	Sign	Sign	Sign	APPROVED BY: Ir. HERRY VAZA M,Eng.Sc		FULL SIZE A3		SHEET NO :
	Date	Date	Date	NIP. : 110038400 / Sign / Date				11 / 20

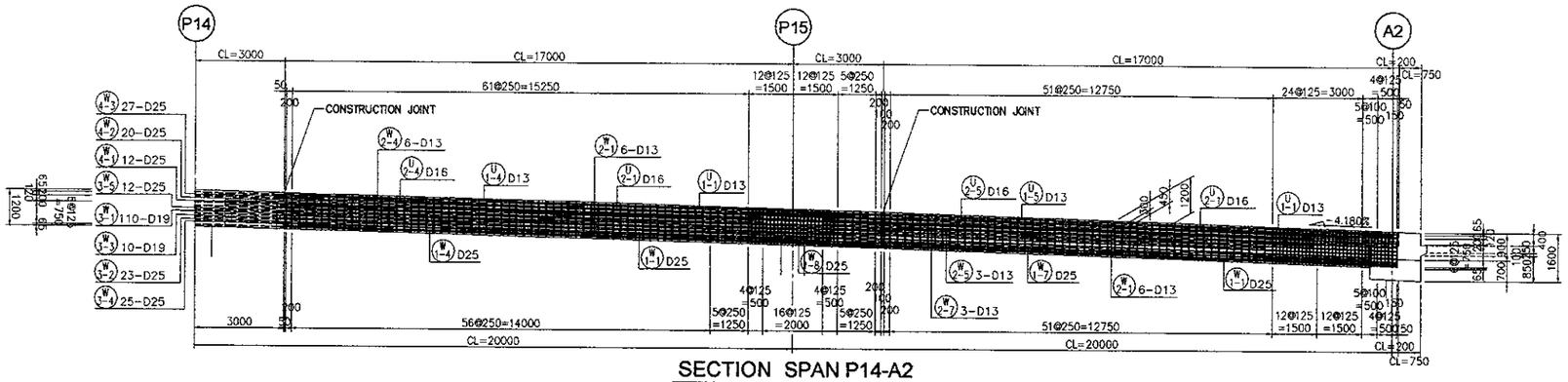

SECTION SPAN P14-A2

SCALE : 1 : 200

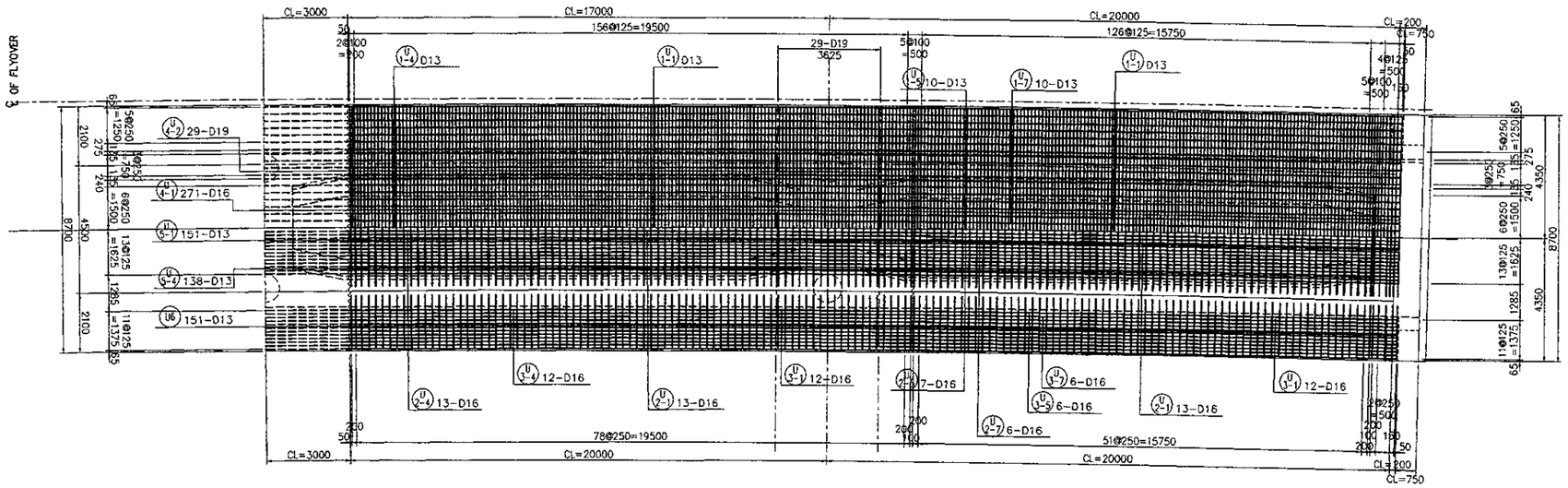

SECTION TOP SLAB

SCALE : 1 : 200

SECTION BOTTOM SLAB

SCALE : 1 : 200

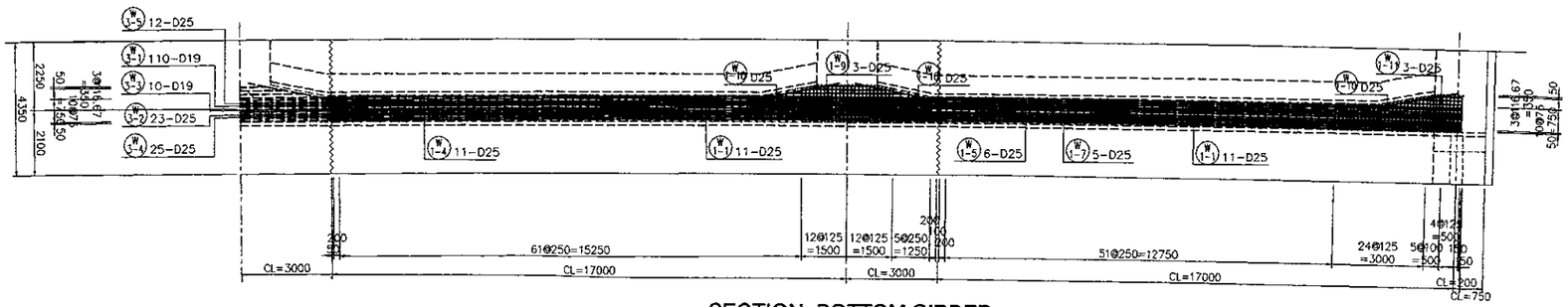

SECTION BOTTOM GIRDER

SCALE : 1 : 200

JICA JAPAN INTERNATIONAL COOPERATION AGENCY / KEI KATAHIRA & ENGINEERS INTERNATIONAL	DESIGNED BY	CHECKED BY	SUBMITTED BY	REPUBLIC OF INDONESIA MINISTRY OF PUBLIC WORKS DIRECTORATE GENERAL OF HIGHWAYS	PROJECT AND LOCATION :	SCALE :	DRAWING TITLE :	DRAWING NO :
	Name: H. HONDA	Name: T. OKUMURA	Name: M. KIUCHI		DETAILED DESIGN STUDY OF NORTH JAVA CORRIDOR FLYOVER PROJECT GEBANG FLYOVER - CONTRACT PACKAGE 2 (NAGREG - GEBANG) WEST JAVA PROVINCE	1 : 100	ARRANGEMENT OF REINFORCEMENT FOR PC GIRDER P12-A2 (1 OF 2)	GCR-012
	Sign	Sign	Sign	APPROVED BY: Ir. HERRY VAZA M,Eng.Sc		FULL SIZE A3		SHEET NO : 12 / 20
	Date	Date	Date	NIP. : 110038400 — Sign / Date				

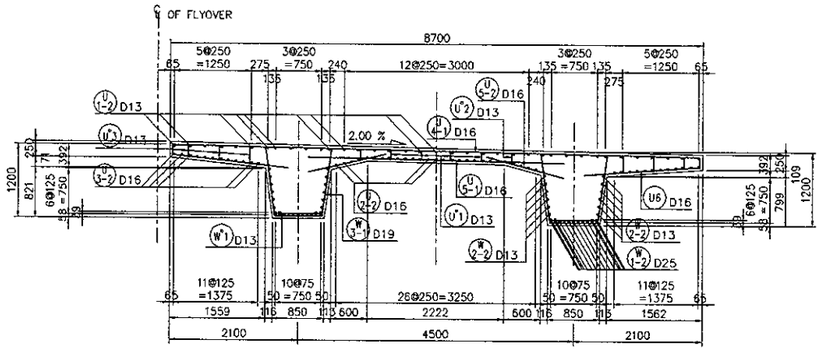

SECTION MID SPAN P12~P13

SCALE : 1 : 100

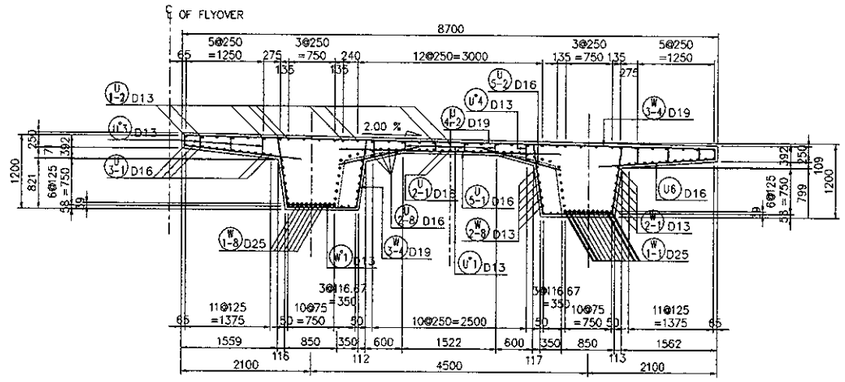

SECTION AT P13

SCALE : 1 : 100

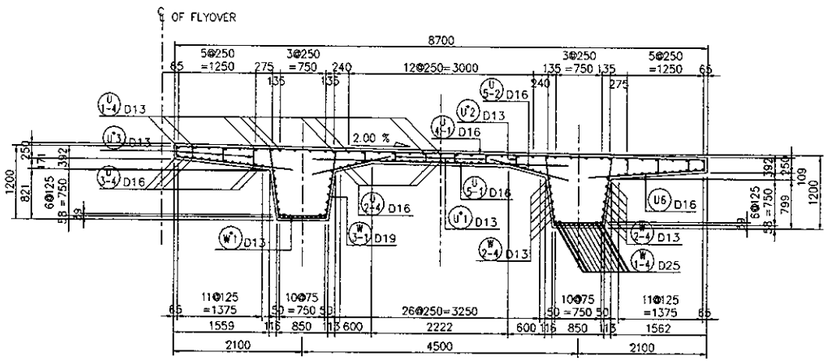

SECTION MID SPAN P13~P14

SCALE : 1 : 100

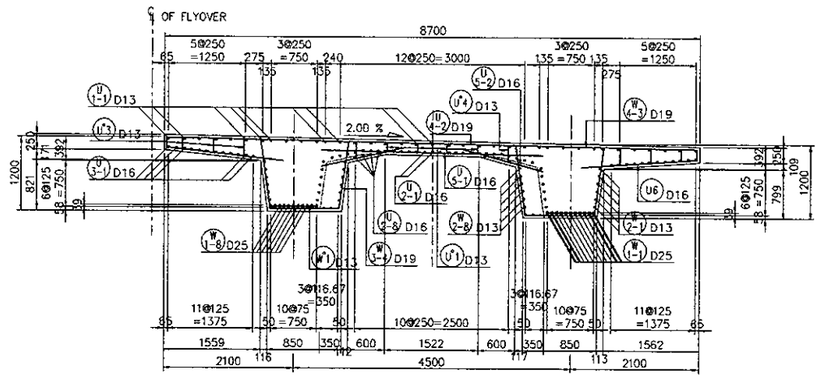

SECTION AT P14

SCALE : 1 : 100

JICA JAPAN INTERNATIONAL COOPERATION AGENCY / KEI KATAHIRA & ENGINEERS INTERNATIONAL	DESIGNED BY	CHECKED BY	SUBMITTED BY	REPUBLIC OF INDONESIA MINISTRY OF PUBLIC WORKS DIRECTORATE GENERAL OF HIGHWAYS	PROJECT AND LOCATION :	SCALE :	DRAWING TITLE :	DRAWING NO :
	Name: H. HONDA	Name: T. OKUMURA	Name: M. KIUCHI		DETAILED DESIGN STUDY OF NORTH JAVA CORRIDOR FLYOVER PROJECT GEBANG FLYOVER - CONTRACT PACKAGE 2 (NAGREG - GEBANG) WEST JAVA PROVINCE	1 : 100	ARRANGEMENT OF REINFORCEMENT FOR PC GIRDER P12-A2 (2 OF 2)	GCR-013
	Sign	Sign	Sign	APPROVED BY: Ir. HERRY VAZA M,Eng.Sc				SHEET NO :
	Date	Date	Date	NIP. : 110038400 / Sign / Date		FULL SIZE A3		13 / 20

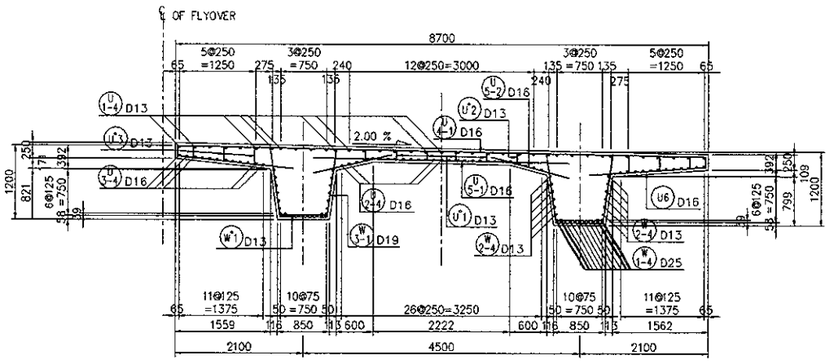

SECTION MID SPAN P14~P15

SCALE : 1 : 100

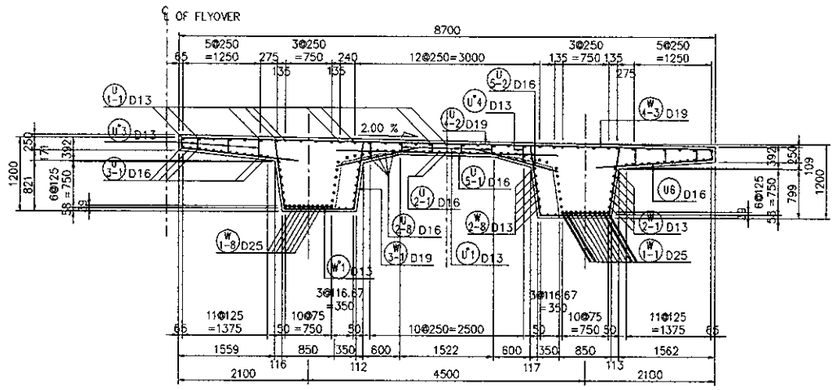

SECTION AT P15

SCALE : 1 : 100

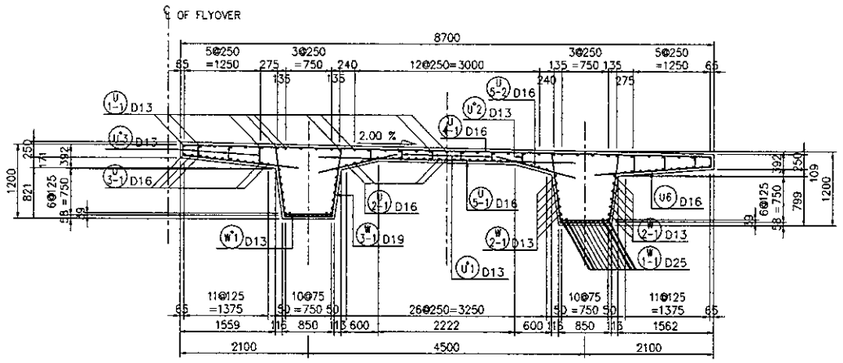

SECTION MID SPAN P15~A2

SCALE : 1 : 100

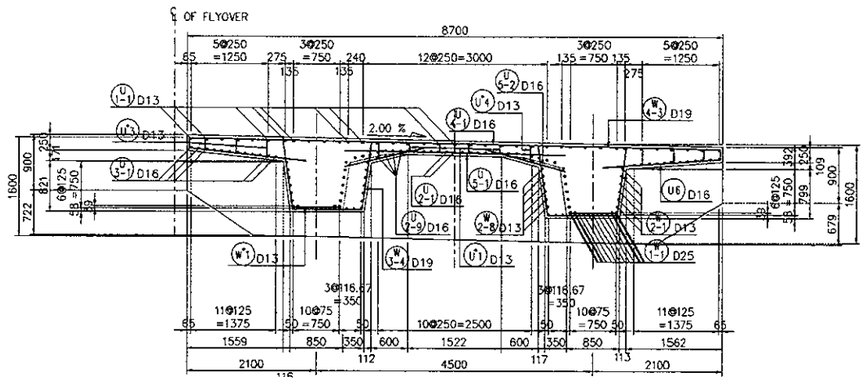

SECTION AT A2

SCALE : 1 : 100

JICA JAPAN INTERNATIONAL COOPERATION AGENCY / KEI KATAHIRA & ENGINEERS INTERNATIONAL	DESIGNED BY	CHECKED BY	SUBMITTED BY	REPUBLIC OF INDONESIA MINISTRY OF PUBLIC WORKS DIRECTORATE GENERAL OF HIGHWAYS	PROJECT AND LOCATION :	SCALE :	DRAWING TITLE :	DRAWING NO :
	Name: H. HONDA	Name: T. OKUMURA	Name: M. KIUCHI		DETAILED DESIGN STUDY OF NORTH JAVA CORRIDOR FLYOVER PROJECT GEBANG FLYOVER - CONTRACT PACKAGE 2 (NAGREG - GEBANG) WEST JAVA PROVINCE	1 : 300	REINFORCEMENT SCHEDULE FOR PC GIRDER P12 - A2 (1 OF 3)	GCR-014
	Sign	Sign	Sign	APPROVED BY: Ir. HERRY VAZA M,Eng.Sc		FULL SIZE A3		SHEET NO : 14 / 20
	Date	Date	Date	NIP. : 11003B400 — Sign / Date				

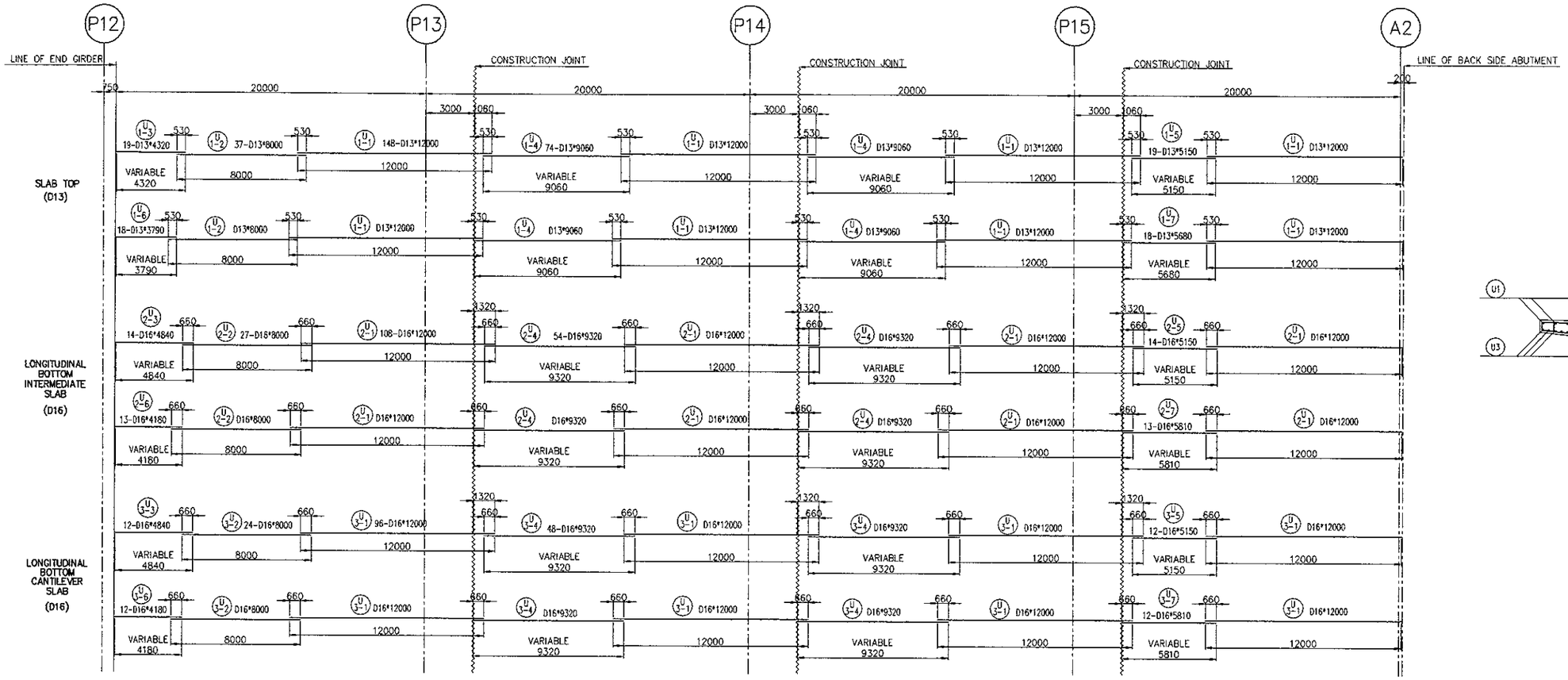

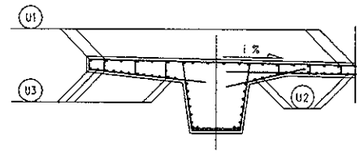

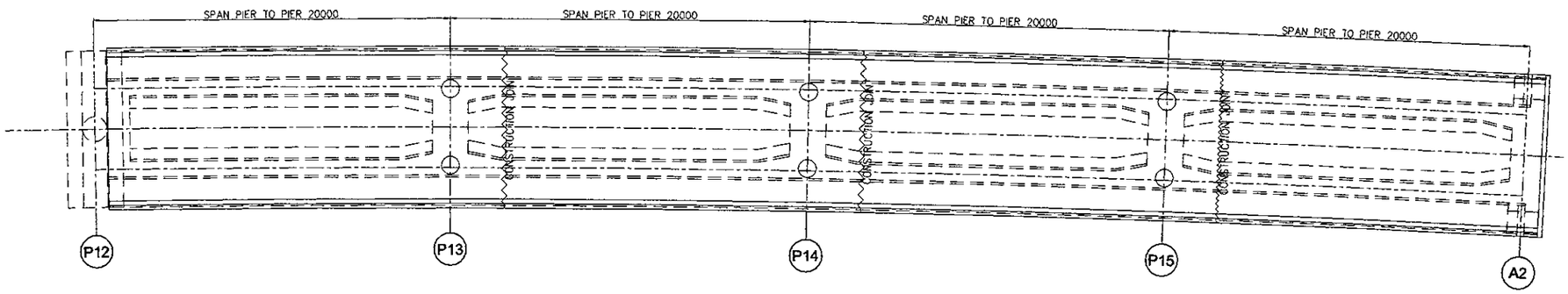

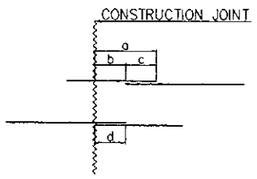

	a	b	c	d
D 13	1060	530	530	530
D 16	1320	660	660	660

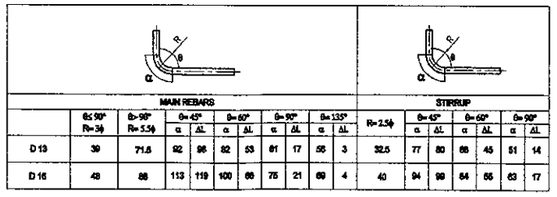

	MAIN REBARS												STIRRUP							
	θ≤90° R=3φ	θ>90° R=5.5φ	θ=45°		θ=60°		θ=90°		θ=135°		R=2.5φ	θ=45°		θ=60°		θ=90°	
			α	ΔL	α	ΔL	α	ΔL	α	ΔL		α	ΔL	α	ΔL	α	ΔL
D 13	39	71.5	92	98	82	53	61	17	55	3	32.5	77	80	65	45	51	14
D 16	48	88	113	119	100	66	75	21	69	4	40	94	98	64	55	63	17

JICA JAPAN INTERNATIONAL COOPERATION AGENCY / KEI KATAHIRA & ENGINEERS INTERNATIONAL	DESIGNED BY	CHECKED BY	SUBMITTED BY	REPUBLIC OF INDONESIA MINISTRY OF PUBLIC WORKS DIRECTORATE GENERAL OF HIGHWAYS	PROJECT AND LOCATION :	SCALE :	DRAWING TITLE :	DRAWING NO :
	Name: H. HONDA	Name: T. OKUMURA	Name: M. KIUCHI		DETAILED DESIGN STUDY OF NORTH JAVA CORRIDOR FLYOVER PROJECT GEBANG FLYOVER - CONTRACT PACKAGE 2 (NAGREG - GEBANG) WEST JAVA PROVINCE	1 : 300	REINFORCEMENT SCHEDULE FOR PC GIRDER P12 - A2 (2 OF 3)	GCR-015
	Sign	Sign	Sign	APPROVED BY: Ir. HERRY VAZA M,Eng.Sc		FULL SIZE A3		SHEET NO : 15 / 20
	Date	Date	Date	NIP. : 110038400 Sign / Date				

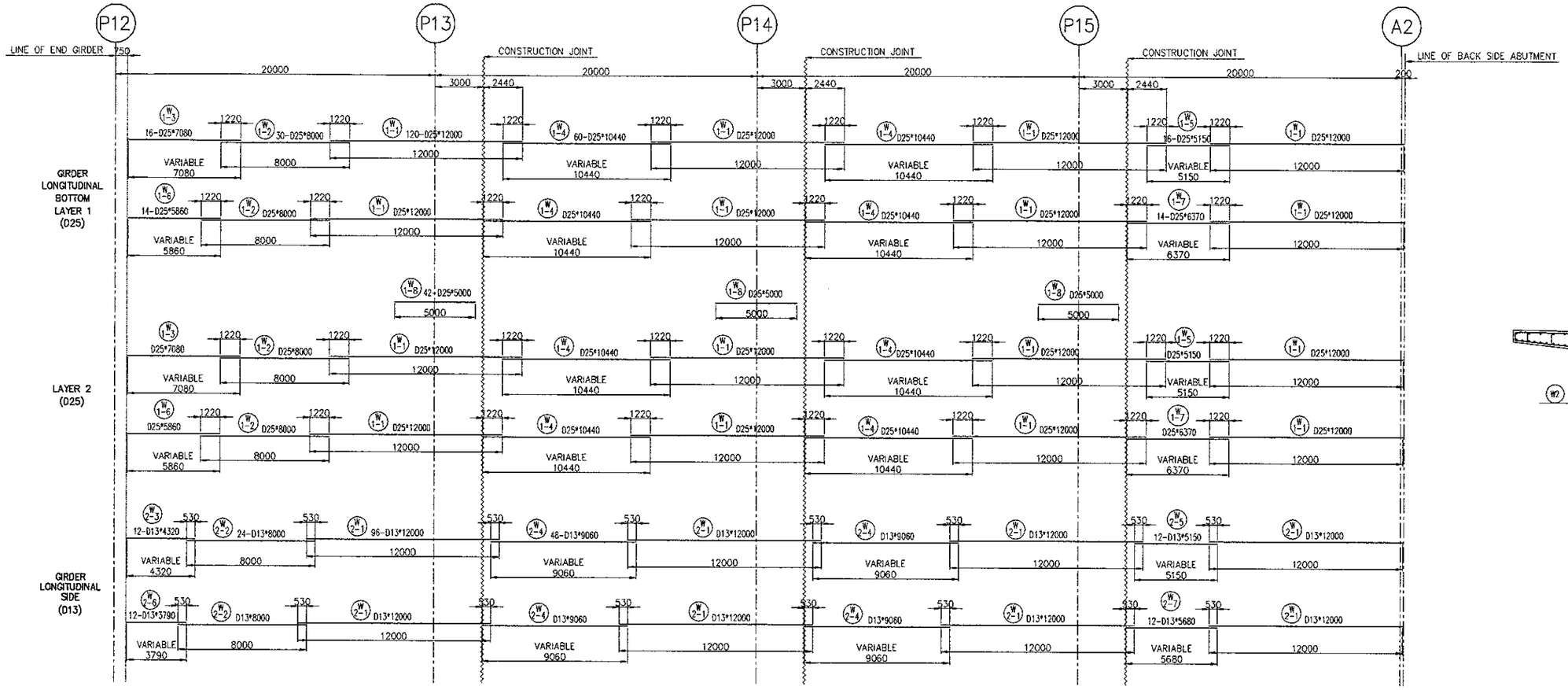

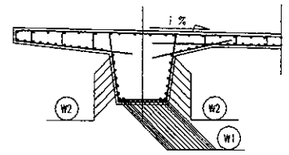

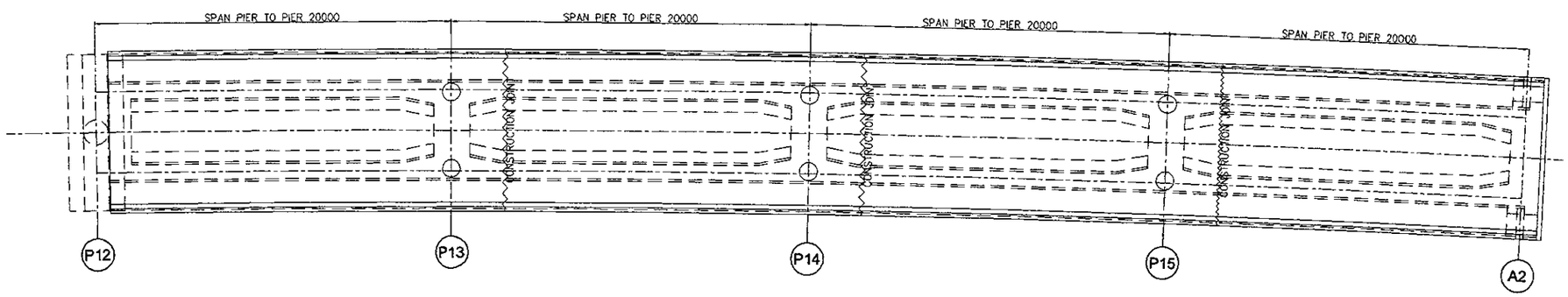

	a	b	c	d
D 13	1060	530	530	530
D 25	2440	1220	1220	1220

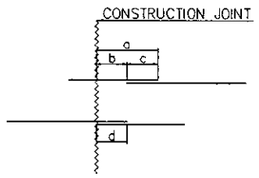

	MAIN REBARS										STIRRUP						
	θ≤90° R=3φ	θ>90° R=5.5φ	θ=45° α	θ=45° ΔL	θ=60° α	θ=60° ΔL	θ=90° α	θ=90° ΔL	θ=135° α	θ=135° ΔL	R=2.5φ	θ=45° α	θ=45° ΔL	θ=60° α	θ=60° ΔL	θ=90° α	θ=90° ΔL
D 13	39	71.5	92	98	82	63	61	17	86	3	32.5	77	80	68	45	51	14
D 25	75	137.5	117	186	157	103	118	32	108	6	75*	177	186	157	103	118	32

* R=3φ

JICA JAPAN INTERNATIONAL COOPERATION AGENCY / KEI KATAHIRA & ENGINEERS INTERNATIONAL	DESIGNED BY		CHECKED BY		SUBMITTED BY		REPUBLIC OF INDONESIA MINISTRY OF PUBLIC WORKS DIRECTORATE GENERAL OF HIGHWAYS		PROJECT AND LOCATION :	SCALE :	DRAWING TITLE :	DRAWING NO :
	Name	H. HONDA	Name	T. OKUMURA	Name	M. KIUCHI			DETAILED DESIGN STUDY OF NORTH JAVA CORRIDOR FLYOVER PROJECT GEBANG FLYOVER - CONTRACT PACKAGE 2 (NAGREG - GEBANG) WEST JAVA PROVINCE	NTS	REINFORCEMENT SCHEDULE FOR PC GIRDER P12-A2 (3 OF 3)	GCR-016
	Sign		Sign		Sign		APPROVED BY	Ir. HERRY VAZA M,Eng.Sc				SHEET NO :
	Date		Date		Date			NIP. : 110038400		FULL SIZE A3		16 / 20

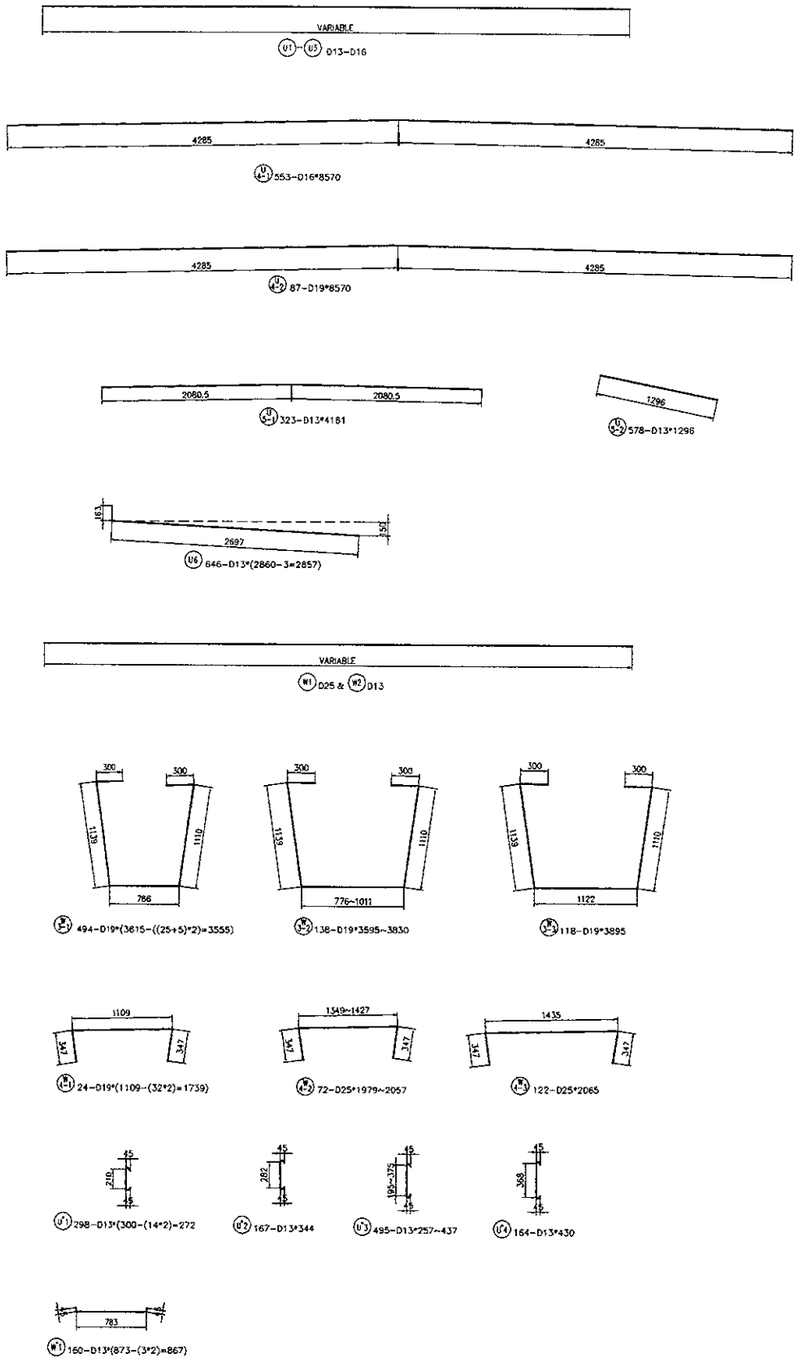

BAR BENDING SCHEDULE

REBAR NAME	DIA. (mm)	LENGTH (mm)	NOS.	UNIT WEIGHT (kg/m')	WEIGHT (kg)	TOTAL WEIGHT (kg)	DIAGRAM	REMARKS
U 1 - 1	13	12000	148	1.04	12.48	1847		
U 1 - 2	13	8000	37	1.04	8.32	308		
U 1 - 3	13	4320	19	1.04	4.49	85		varies length
U 1 - 4	13	9060	74	1.04	9.42	697		varies length
U 1 - 5	13	5150	19	1.04	5.36	102		varies length
U 1 - 6	13	3790	18	1.04	3.94	71		varies length
U 1 - 7	13	5680	18	1.04	5.91	106		varies length
U 2 - 1	16	12000	106	1.58	18.96	2048		
U 2 - 2	16	8000	27	1.58	12.64	341		
U 2 - 3	16	4840	14	1.58	7.65	107		varies length
U 2 - 4	16	9320	54	1.58	14.73	795		varies length
U 2 - 5	16	5150	14	1.58	8.14	114		varies length
U 2 - 6	16	4180	13	1.58	6.60	86		varies length
U 2 - 7	16	5810	13	1.58	9.18	119		varies length
U 2 - 8	16	3164	24	1.58	5.00	120		varies length
U 2 - 9	16	1582	8	1.58	2.50	20		varies length
U 3 - 1	16	12000	96	1.58	18.96	1820		
U 3 - 2	16	8000	24	1.58	12.64	303		
U 3 - 3	16	4840	12	1.58	7.65	92		varies length
U 3 - 4	16	9320	48	1.58	14.73	707		varies length
U 3 - 5	16	5150	12	1.58	8.14	98		varies length
U 3 - 6	16	4180	12	1.58	6.60	79		varies length
U 3 - 7	16	5810	12	1.58	9.18	110		varies length
U 4 - 1	16	8570	553	1.58	13.54	7488		
U 4 - 2	19	8570	87	2.23	19.11	1663		
U 5 - 1	13	4161	323	1.04	4.33	1398		
U 5 - 2	13	1296	578	1.04	1.35	779		
U 6	13	2857	646	1.04	2.97	1919		
U' 1	13	272	298	1.04	0.28	84		
U' 2	13	344	167	1.04	0.36	60		varies length
U' 3	13	342	495	1.04	0.36	178		varies length
U' 4	13	430	164	1.04	0.45	73		varies length
SUB TOTAL - 1						23818		

REBAR NAME	DIA. (mm)	LENGTH (mm)	NOS.	UNIT WEIGHT (kg/m')	WEIGHT (kg)	TOTAL WEIGHT (kg)	DIAGRAM	REMARKS
W 1 - 1	25	12000	120	3.85	46.20	5544		
W 1 - 2	25	8000	30	3.85	30.80	924		
W 1 - 3	25	7080	16	3.85	27.26	436		varies length
W 1 - 4	25	10440	60	3.85	40.19	2412		varies length
W 1 - 5	25	5150	16	3.85	19.83	317		varies length
W 1 - 6	25	5860	14	3.85	22.56	316		varies length
W 1 - 7	25	6370	14	3.85	24.52	343		varies length
W 1 - 8	25	5000	42	3.85	19.25	809		varies length
W 1 - 9	25	2830	18	3.85	10.90	196		varies length
W 1 - 10	25	3275	14	3.85	12.61	177		varies length
W 1 - 11	25	1315	6	3.85	5.06	30		varies length
W 2 - 1	13	12000	96	1.04	12.48	1198		
W 2 - 2	13	8000	24	1.04	8.32	200		
W 2 - 3	13	4320	12	1.04	4.49	54		varies length
W 2 - 4	13	9060	48	1.04	9.42	452		varies length
W 2 - 5	13	5150	12	1.04	5.36	64		varies length
W 2 - 6	13	3780	12	1.04	3.94	47		varies length
W 2 - 7	13	5680	12	1.04	5.91	71		varies length
W 2 - 8	13	3185	30	1.04	3.31	99		varies length
W 2 - 9	13	1593	10	1.04	1.66	17		varies length
W 3 - 1	19	3555	494	2.23	7.93	3916		
W 3 - 2	19	3683	138	2.23	8.21	1133		varies length
W 3 - 3	19	3895	118	2.23	8.69	1025		
W 4 - 1	19	1739	24	2.23	3.88	93		
W 4 - 2	19	2018	72	2.23	4.50	324		varies length
W 4 - 3	19	2065	122	2.23	4.60	562		
W' 1	13	867	160	1.04	0.90	144		
SUB TOTAL - 2						20904		
TOTAL REBAR WEIGHT P12 - A2						44720		

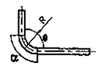

	MAIN REBARS										STIRRUP						
	θ≤90° R=3φ	θ>90° R=5.5φ	θ=45°		θ=60°		θ=90°		θ=135°		R=2.5φ	θ=45°		θ=60°		θ=90°	
			α	ΔL	α	ΔL	α	ΔL	α	ΔL		α	ΔL	α	ΔL	α	ΔL
D 13	39	71.5	92	96	82	63	61	17	58	3	32.5	77	80	66	46	51	14
D 16	48	88	113	119	100	65	75	21	69	4	40	94	99	84	55	63	17
D 19	57	104.5	134	141	119	78	89	25	82	5	47.5	112	117	99	66	75	20
D 25	75	137.5	117	156	157	103	118	32	108	6	75*	177	185	157	103	118	32

* R=3φ

JICA JAPAN INTERNATIONAL COOPERATION AGENCY / KEI KATAHIRA & ENGINEERS INTERNATIONAL	DESIGNED BY	CHECKED BY	SUBMITTED BY	REPUBLIC OF INDONESIA MINISTRY OF PUBLIC WORKS DIRECTORATE GENERAL OF HIGHWAYS	PROJECT AND LOCATION :	SCALE :	DRAWING TITLE :	DRAWING NO :
	Name: H. HONDA	Name: T. OKUMURA	Name: M. KIUCHI		DETAILED DESIGN STUDY OF NORTH JAVA CORRIDOR FLYOVER PROJECT GEBANG FLYOVER - CONTRACT PACKAGE 2 (NAGREG - GEBANG) WEST JAVA PROVINCE	1 : 100 1 : 500	ARRANGEMENT OF REINFORCEMENT FOR CROSS BEAMS P13, P14,P15	GCR-017
	Sign	Sign	Sign	APPROVED BY: Ir. HERRY VAZA M,Eng.Sc				SHEET NO :
	Date	Date	Date	NIP. : 110038400 — Sign / Date		FULL SIZE A3		17 / 20

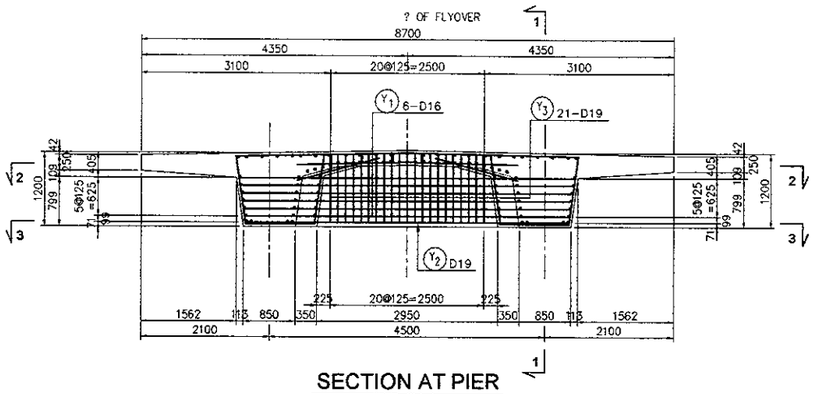

SECTION AT PIER
SCALE : 1 :100

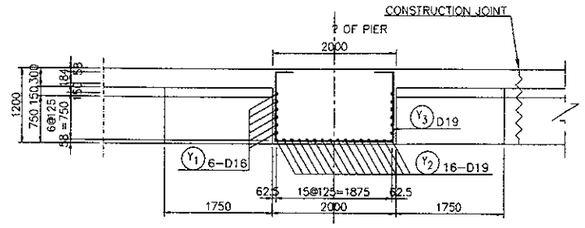

SECTION 1 - 1
SCALE : 1 : 100

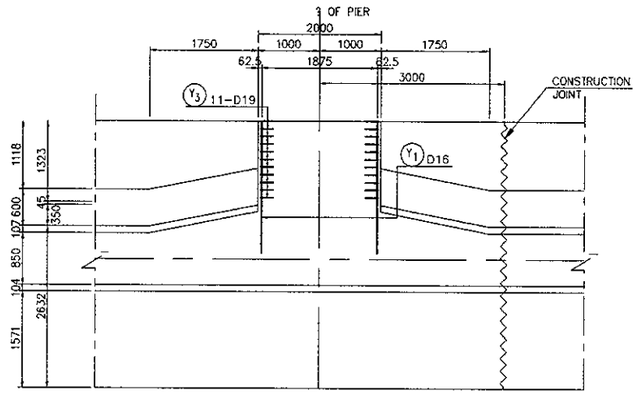

SECTION 2 - 2
SCALE : 1 : 100

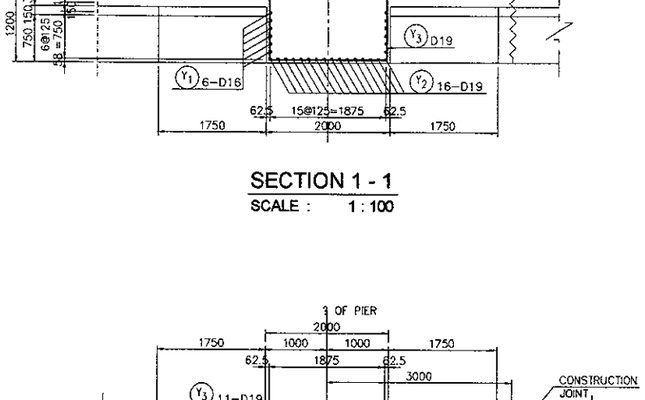

SECTION 3 - 3
SCALE : 1 : 100

REINF NO.	ϕ (mm)	TYPE	BENDING DIMENSION (mm) a	b	c	d	TOTAL LENGTH (m)	NUMBER	UNIT WEIGHT (kg/m)	WEIGHT (kg)	REMARK
PIER											
Y 1	D16	A	5430				5.430	12	1.58	103	—
2	D19	A	5300				5.300	16	2.23	189	—
3	D19	B	1901	1043	276		4.460	21	2.23	209	[ ]
									D19	398	
									D16	103	
									TOTAL (per 1 pier)	501	
PIER LOCATION							P12 - A2 (P13, P14,P15)				
REBAR WEIGHT TOTAL							501 x 3 = 1503 kg				

STIRRUP

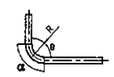

	R= 2.5ϕ	θ= 45° α	θ= 45° ΔL	θ= 60° α	θ= 60° ΔL	θ= 90° α	θ= 90° ΔL
D16	40	94	99	84	55	63	17
D19	47.5	112	117	99	66	75	20

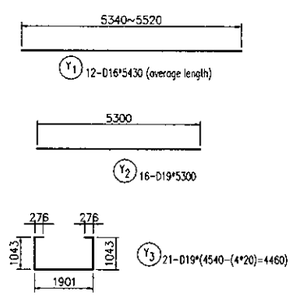

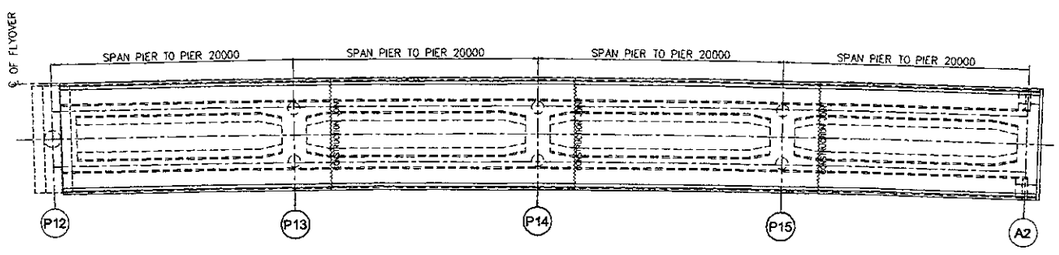

KEY PLAN
SCALE : 1 : 500

JICA JAPAN INTERNATIONAL COOPERATION AGENCY / KEI KATAHIRA & ENGINEERS INTERNATIONAL	DESIGNED BY	CHECKED BY	SUBMITTED BY	REPUBLIC OF INDONESIA MINISTRY OF PUBLIC WORKS DIRECTORATE GENERAL OF HIGHWAYS	PROJECT AND LOCATION :	SCALE :	DRAWING TITLE :	DRAWING NO :
	Name: H. HONDA	Name: T. OKUMURA	Name: M. KIUCHI	APPROVED BY: Ir. HERRY VAZA M,Eng.Sc	DETAILED DESIGN STUDY OF NORTH JAVA CORRIDOR FLYOVER PROJECT GEBANG FLYOVER - CONTRACT PACKAGE 2 (NAGREG - GEBANG) WEST JAVA PROVINCE	1 : 100 / 1 : 500	ARRANGEMENT OF REINFORCEMENT FOR CROSS BEAMS A2	GCR-018
	Sign	Sign	Sign	NIP. : 11003B400 Sign		FULL SIZE A3		SHEET NO : 18 / 20
	Date	Date	Date	Date				

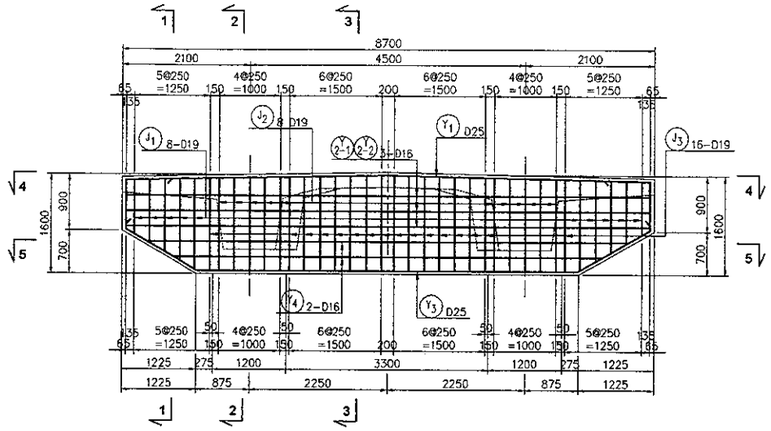

SECTION AT ABUTMENT
SCALE : 1 :100

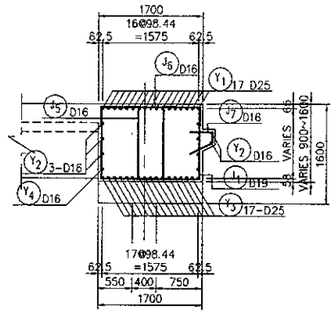

SECTION 1 - 1
SCALE : 1 : 100

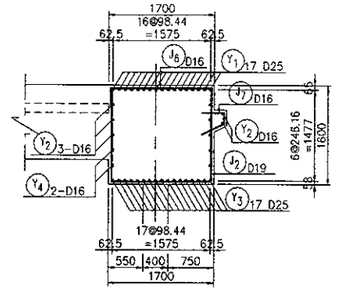

SECTION 2 - 2
SCALE : 1 : 100

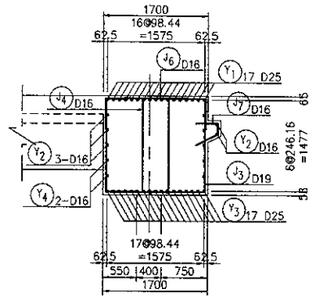

SECTION 3 - 3
SCALE : 1 : 100

BAR BENDING ABUTMENT

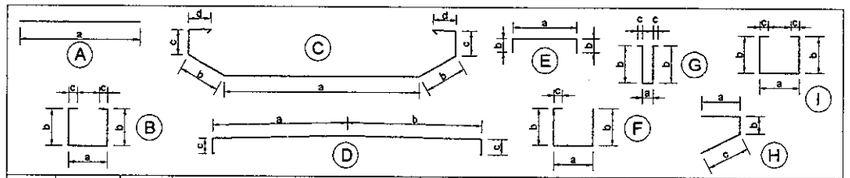

REINF NO.	φ (mm)	TYPE	BENDING DIMENSION (mm) a	b	c	d	e	TOTAL LENGTH (m)	NUMBER	UNIT WEIGHT (kg/m)	WEIGHT (kg)	REMARK
A 2												
J 1	D19	F	1601	1078	300			4.57	8	2.23	82	
2	D19	I	1601	1503	340			5.287	8	2.23	94	
3	D19	F	1601	1503	340			4.947	16	2.23	177	
4	D16	G	420	1523	200			3.866	16	1.58	98	
5	D16	G	420	1097.1	200			3.0142	10	1.58	48	
6	D16	E	1620	300				2.22	36	1.58	126	
7	D16	H	350	177	391			0.918	36	1.58	52	
Y 1	D25	D	4286	4286	500			9.572	17	3.85	626	
2	D16	A	8570					8.57	3	1.58	41	
3	D25	C	6222	1351	789	749		12	17	3.85	785	
4	D16	A	10652					10.652	4	1.58	67	
										D25	1411	
										D19	353	
										D16	432	
										REBAR WEIGHT TOTAL	2196 kg	

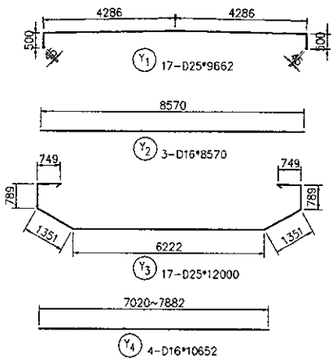

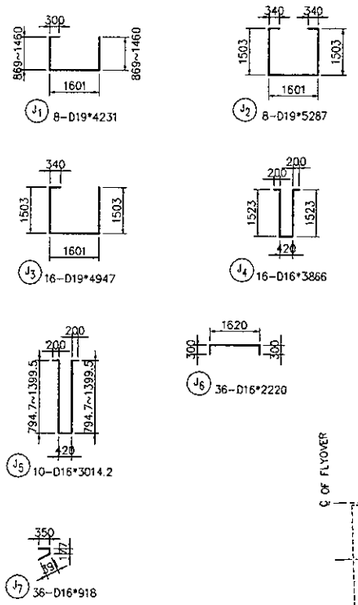

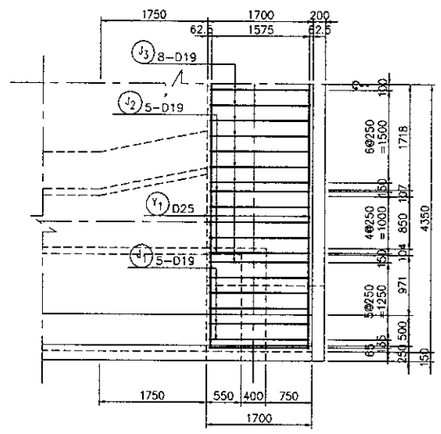

SECTION 4 - 4
SCALE : 1 : 100

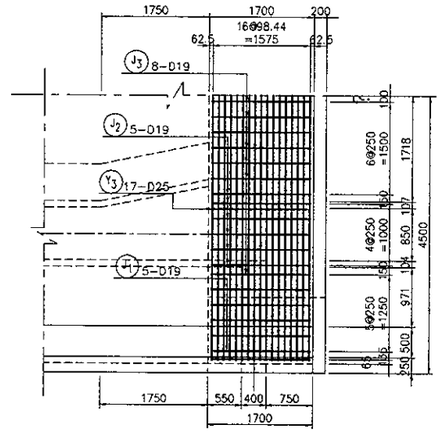

SECTION 5 - 5
SCALE : 1 : 100

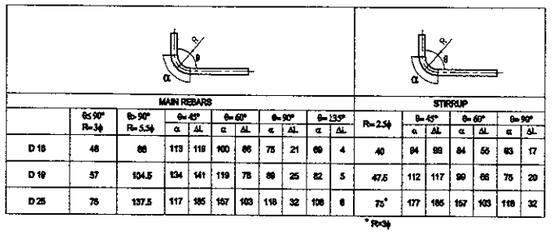

	MAIN REBARS										STIRRUP						
	θ≤90° R=3φ	θ>90° R=5.5φ	θ=45°		θ=60°		θ=90°		θ=135°		R=2.5φ	θ=45°		θ=60°		θ=90°	
			α	ΔL	α	ΔL	α	ΔL	α	ΔL		α	ΔL	α	ΔL	α	ΔL
D 16	48	88	113	118	100	86	75	21	69	4	40	94	99	84	55	63	17
D 19	57	104.5	134	141	119	75	89	25	82	5	47.5	112	117	99	66	75	20
D 25	75	137.5	117	185	157	103	118	32	108	6	75*	177	185	157	103	118	32

* R=3φ

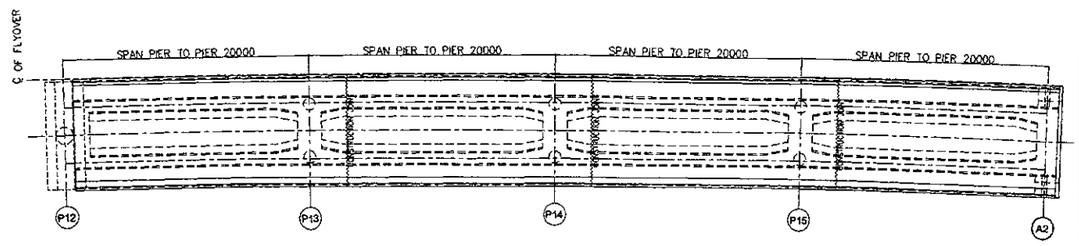

KEY PLAN
SCALE : 1 : 500

JICA JAPAN INTERNATIONAL COOPERATION AGENCY / KATAHIRA & ENGINEERS INTERNATIONAL	DESIGNED BY	CHECKED BY	SUBMITTED BY	REPUBLIC OF INDONESIA MINISTRY OF PUBLIC WORKS DIRECTORATE GENERAL OF HIGHWAYS	PROJECT AND LOCATION :	SCALE :	DRAWING TITLE :	DRAWING NO :
	Name: H. HONDA	Name: T. OKUMURA	Name: M. KIUCHI		DETAILED DESIGN STUDY OF NORTH JAVA CORRIDOR FLYOVER PROJECT GEBANG FLYOVER - CONTRACT PACKAGE 2 (NAGREG - GEBANG) WEST JAVA PROVINCE	1 : 100 1 : 500	ARRANGEMENT OF REINFORCEMENT FOR CROSS BEAMS P12	GCR-019
	Sign	Sign	Sign	APPROVED BY: Ir. HERRY VAZA M,Eng.Sc NIP. : 110038400		FULL SIZE A3		SHEET NO : 19 / 20
	Date	Date	Date	Sign / Date				

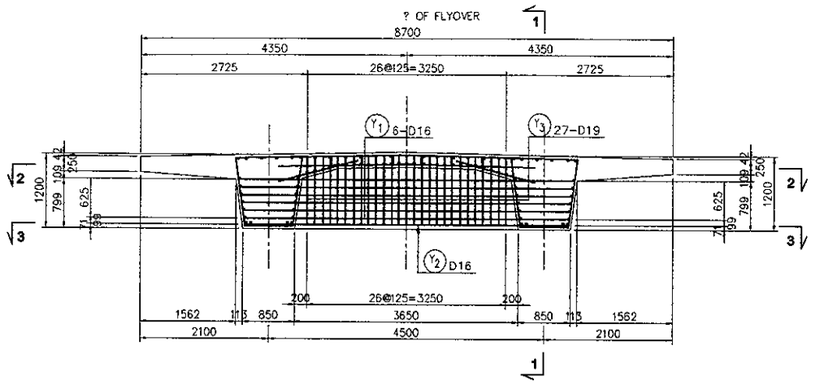

SECTION AT COPING PIER
SCALE : 1 :100

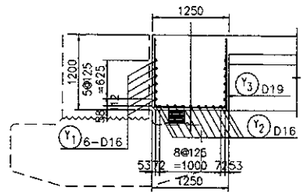

SECTION 1 - 1
SCALE : 1 : 100

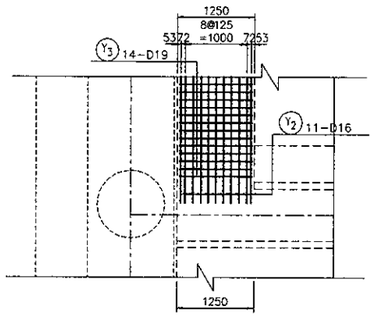

SECTION 2 - 2
SCALE : 1 : 100

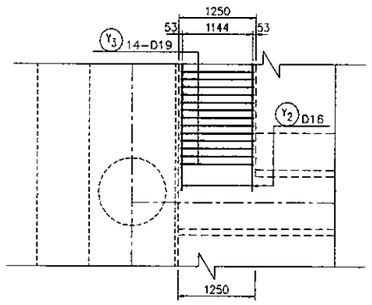

SECTION 3 - 3
SCALE : 1 : 100

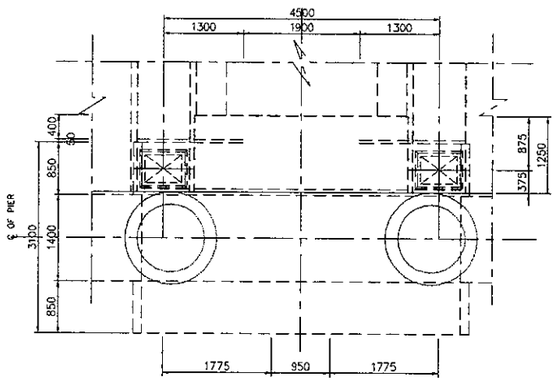

SECTION
SCALE : 1 :100

BAR BENDING

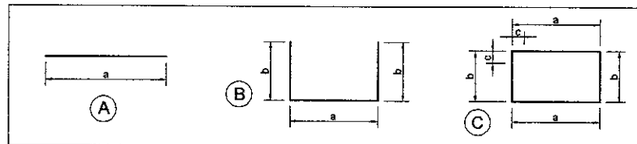

REINF NO.	φ (mm)	TYPE	BENDING DIMENSION (mm) a	b	c	d	TOTAL LENGTH (m)	NUMBER	UNIT WEIGHT (kg/m)	WEIGHT (kg)	REMARK
PIER											
Y 1	D16	A	5430				5.430	12	1.58	103	—
2	D16	A	5300				5.300	16	1.58	134	—
3	D19	B	1165	1110			3.345	27	2.23	201	⊔
									D19	201	
									D16	237	
									REBAR WEIGHT TOTAL	438 kg	

STIRRUP

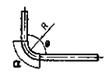

	R=2.5φ	θ=45° α	θ=45° ΔL	θ=60° α	θ=60° ΔL	θ=90° α	θ=90° ΔL
D16	40	94	99	84	55	63	17
D19	47.5	112	117	99	66	75	20

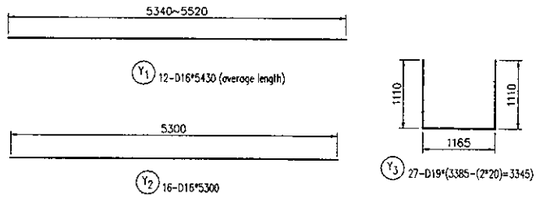

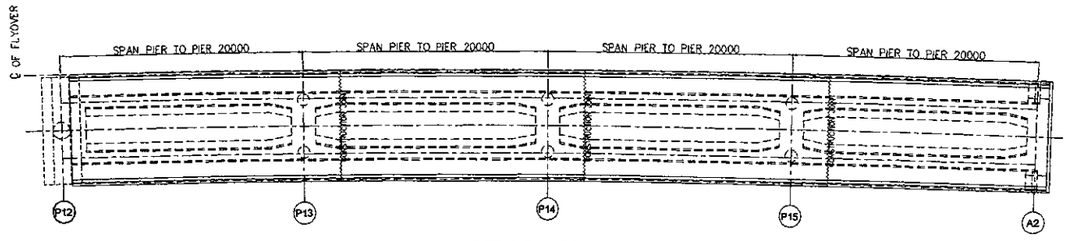

KEY PLAN
SCALE : 1 : 500

JAPAN INTERNATIONAL COOPERATION AGENCY KATAHIRA & ENGINEERS INTERNATIONAL	DESIGNED BY	CHECKED BY	SUBMITTED BY	REPUBLIC OF INDONESIA MINISTRY OF PUBLIC WORKS DIRECTORATE GENERAL OF HIGHWAYS	PROJECT AND LOCATION :	SCALE :	DRAWING TITLE :	DRAWING NO :
	Name: H. HONDA	Name: T. OKUMURA	Name: M. KIUCHI		DETAILED DESIGN STUDY OF NORTH JAVA CORRIDOR FLYOVER PROJECT GEBANG FLYOVER - CONTRACT PACKAGE 2 (NAGREG - GEBANG) WEST JAVA PROVINCE	1 : 50 1 : 500	ARRANGEMENT OF REINFORCEMENT FOR ANCHORAGE P12 - A2	GCR-020
	Sign	Sign	Sign	APPROVED BY: Ir. HERRY VAZA M,Eng.Sc NIP. : 110038400				SHEET NO :
	Date	Date	Date	Sign / Date		FULL SIZE A3		20 / 20

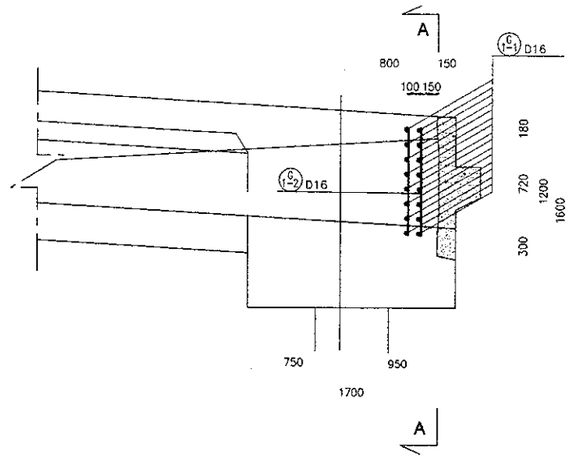

SECTION END ANCHORAGE
SCALE : 1 : 50

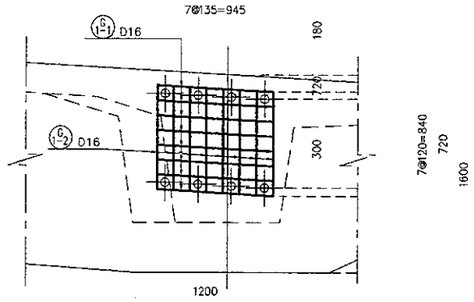

SECTION A - A
SCALE : 1 : 50

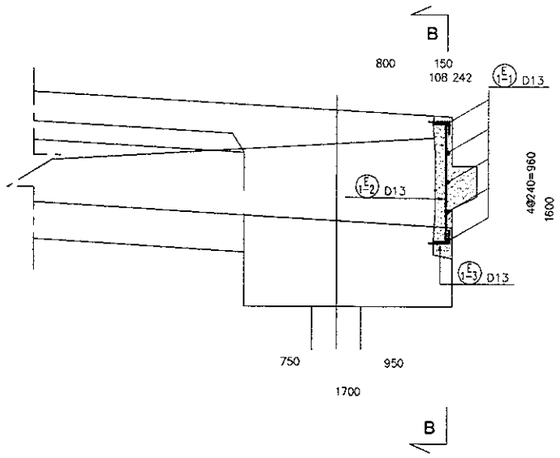

SECTION END ANCHORAGE
SCALE : 1 : 50

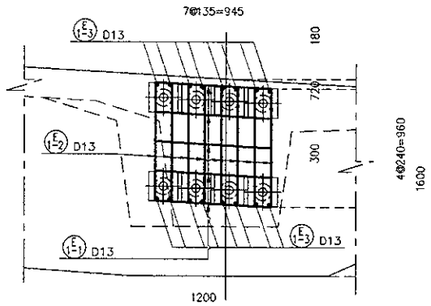

SECTION B - B
SCALE : 1 : 50

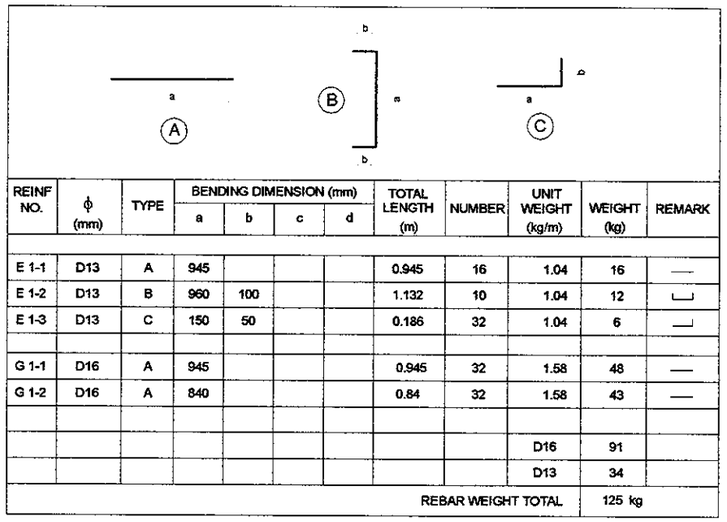

REINF NO.	ϕ (mm)	TYPE	BENDING DIMENSION (mm) a	b	c	d	TOTAL LENGTH (m)	NUMBER	UNIT WEIGHT (kg/m)	WEIGHT (kg)	REMARK
E 1-1	D13	A	945				0.945	16	1.04	16	—
E 1-2	D13	B	960	100			1.132	10	1.04	12	⊔
E 1-3	D13	C	150	50			0.186	32	1.04	6	⊔
G 1-1	D16	A	945				0.945	32	1.58	48	—
G 1-2	D16	A	840				0.84	32	1.58	43	—
									D16	91	
									D13	34	
								REBAR WEIGHT TOTAL		125 kg	

STIRRUP

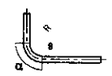

	R= 2.5ϕ	θ= 45°		θ= 60°		θ= 90°	
		α	ΔL	α	ΔL	α	ΔL
D16	40	94	99	84	55	63	17
D19	47.5	112	117	99	68	75	20

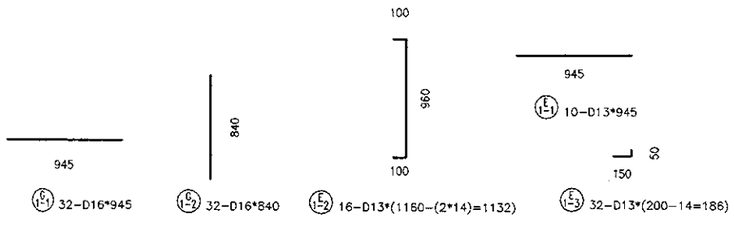

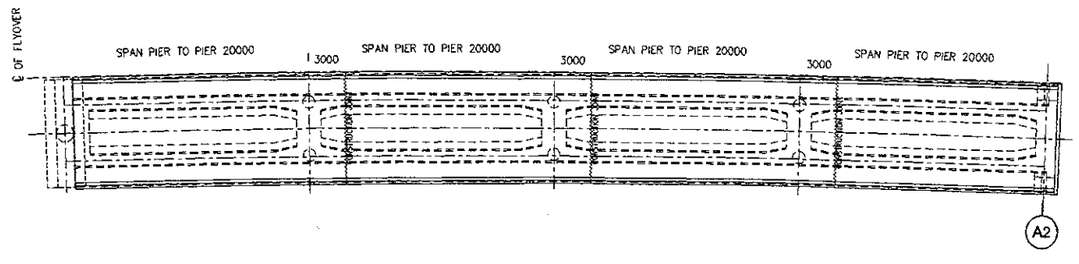

KEY PLAN
SCALE : 1 : 500

JAPAN INTERNATIONAL
COOPERATION AGENCY

DIRECTORATE GENERAL OF HIGHWAY
MINISTRY OF PUBLIC WORKS
REPUBLIC OF INDONESIA

MISCELLANEOUS

KATAHIRA & ENGINEERS INTERNATIONAL

JICA JAPAN INTERNATIONAL COOPERATION AGENCY / KEI KATAHIRA & ENGINEERS INTERNATIONAL	DESIGNED BY	CHECKED BY	SUBMITTED BY	REPUBLIC OF INDONESIA MINISTRY OF PUBLIC WORKS DIRECTORATE GENERAL OF HIGHWAYS	PROJECT AND LOCATION :	SCALE :	DRAWING TITLE :	DRAWING NO :
	Name: S. MATSUI	Name: T. OKUMURA	Name: M. KIUCHI		DETAILED DESIGN STUDY OF NORTH JAVA CORRIDOR FLYOVER PROJECT GEBANG FLYOVER - CONTRACT PACKAGE 2 (NAGREG - GEBANG) WEST JAVA PROVINCE	NOT TO SCALE	QUANTITIES SUMMARY FOR SUPERSTRUCTURE MISCELLANEOUS	GSM-01
	Sign	Sign	Sign	APPROVED BY: Ir. HERRY VAZA M,Eng.Sc NIP. : 110038400 — Sign		FULL SIZE A3		SHEET NO : 01 / 12
	Date	Date	Date	Date				

SUPPLEMENTARIES FOR STEEL SUPERSTRUCTURE

NO.	I T E M	UNIT	QUANTITY	NOTES
1	BEARING : – MOVEABLE TYPE B2 (ø400x65.5mm)	pcs	8	
	– FIXED TYPE C1 (ø580x77mm)	pcs	2	
	– FIXED TYPE C3 (ø935x112mm)	pcs	2	
2	STOPPER (ø300x143mm)	pcs	8	
3	EXPANSION JOINT : – PIER P4	m'	2	
	– PIER P7	m'	2	
	– PIER P12	m'	2	
4	RESTRAINER : – PIER P4 TYPE 2 (TP–170)	pcs	2	
	– PIER P7 TYPE 2 (TP–170)	pcs	2	
	– PIER P12 TYPE 2 (TP–170)	pcs	2	
5	PARAPET	m'	450	WITH OUTER GUTTER
6	MEDIAN	m'	–	HIGHWAY PORTION

SUPPLEMENTARIES FOR PC SUPERSTRUCTURE

NO.	I T E M	UNIT	QUANTITY	NOTES
1	BEARING : – TYPE A4 (520x520x123mm)	pcs	4	
2	STOPPER (ø55x143mm)	pcs	14	
3	PARAPET	m'	320.0	NO OUTER GUTTER
4	MEDIAN	m'	–	HIGHWAY PORTION
5	EXPANSION JOINT	m'	54.0	

JICA JAPAN INTERNATIONAL COOPERATION AGENCY / KEI KATAHIRA & ENGINEERS INTERNATIONAL	DESIGNED BY	CHECKED BY	SUBMITTED BY	REPUBLIC OF INDONESIA MINISTRY OF PUBLIC WORKS DIRECTORATE GENERAL OF HIGHWAYS	PROJECT AND LOCATION :	SCALE :	DRAWING TITLE :	DRAWING NO :
	Name: S. MATSUI	Name: T. OKUMURA	Name: M. KIUCHI		DETAILED DESIGN STUDY OF NORTH JAVA CORRIDOR FLYOVER PROJECT GEBANG FLYOVER - CONTRACT PACKAGE 2 (NAGREG - GEBANG) WEST JAVA PROVINCE	1 : 1000	EXPANSION JOINT LAY OUT PLAN	GSM-002
	Sign	Sign	Sign	APPROVED BY: Ir. HERRY VAZA M,Eng.Sc NIP. : 110038400				SHEET NO :
	Date	Date	Date	Sign / Date		FULL SIZE A3		02 / 12

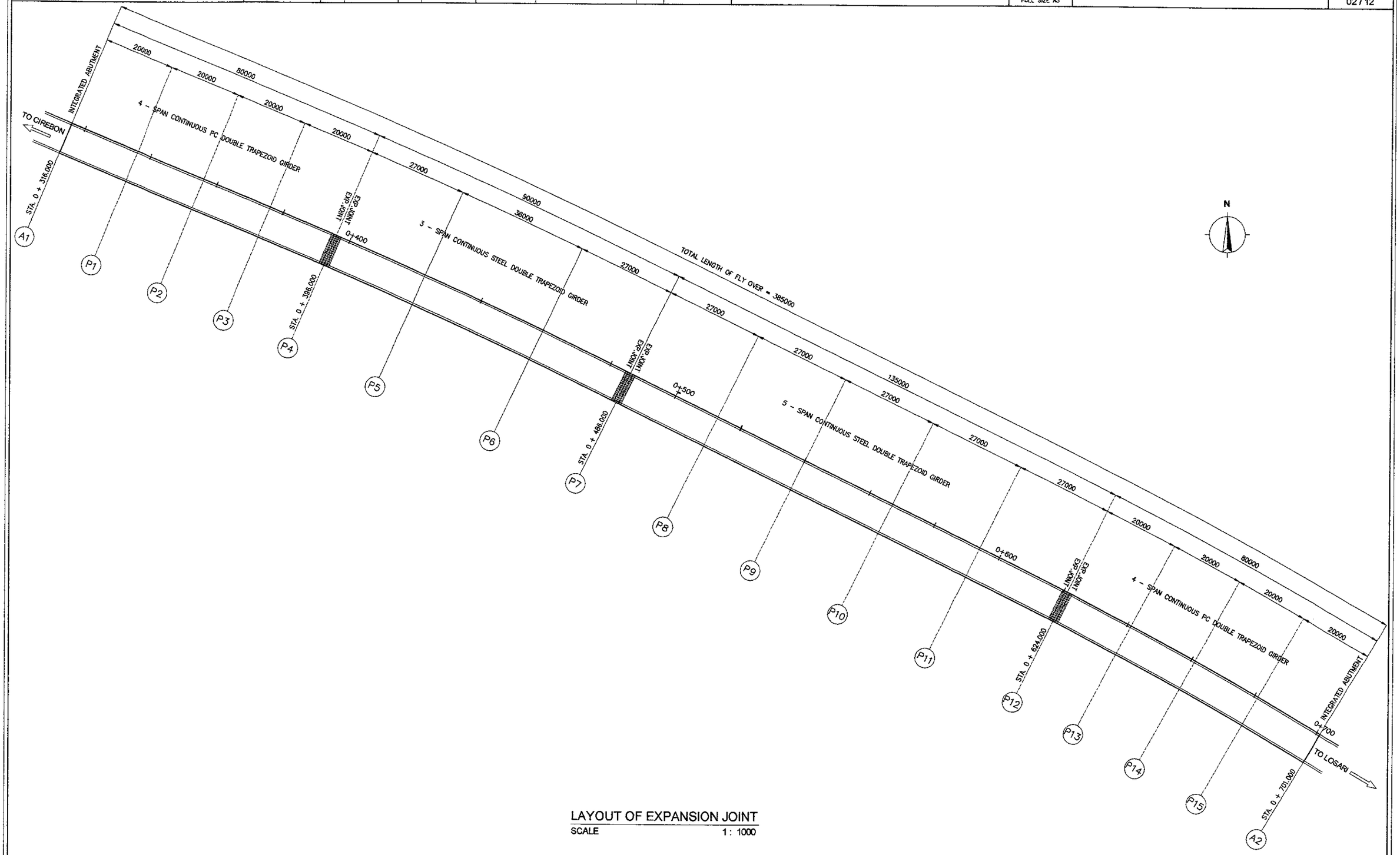

LAYOUT OF EXPANSION JOINT

SCALE 1 : 1000

NOTES :

1. TOTAL MOVEMENT OF EACH TYPE OF EXPANSION JOINTS = 50 mm
2. THE DETAIL OF EXPANSION JOINTS SEE DWG. NO. GSM-03
3. ALL DIMENSIONS ARE IN MILIMETERS

JICA JAPAN INTERNATIONAL COOPERATION AGENCY / KEI KATAHIRA & ENGINEERS INTERNATIONAL	DESIGNED BY	CHECKED BY	SUBMITTED BY	REPUBLIC OF INDONESIA MINISTRY OF PUBLIC WORKS DIRECTORATE GENERAL OF HIGHWAYS	PROJECT AND LOCATION :	SCALE :	DRAWING TITLE :	DRAWING NO :
	Name: S. MATSUI	Name: T. OKUMURA	Name: M. KIUCHI		DETAILED DESIGN STUDY OF NORTH JAVA CORRIDOR FLYOVER PROJECT GEBANG FLYOVER - CONTRACT PACKAGE 2 (NAGREG - GEBANG) WEST JAVA PROVINCE	1 : 5 1 : 100 1 : 2000	DETAIL OF EXPANSION JOINT	GSM-003
	Sign	Sign	Sign	APPROVED BY: Ir. HERRY VAZA M,Eng.Sc NIP. : 110038400 — Sign		FULL SIZE A3		SHEET NO : 03 / 12
	Date	Date	Date	Date				

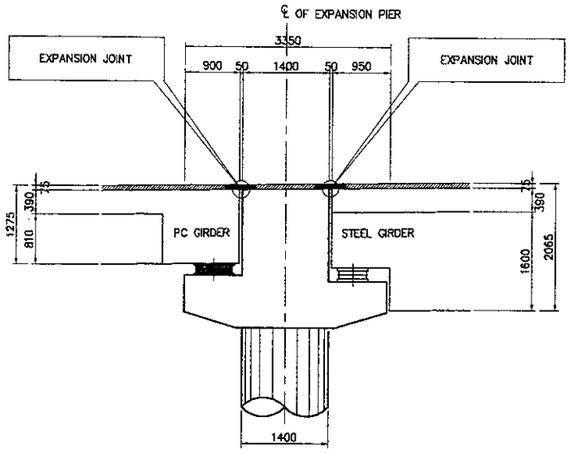

PROFILE OF PIER

SCALE 1 : 100

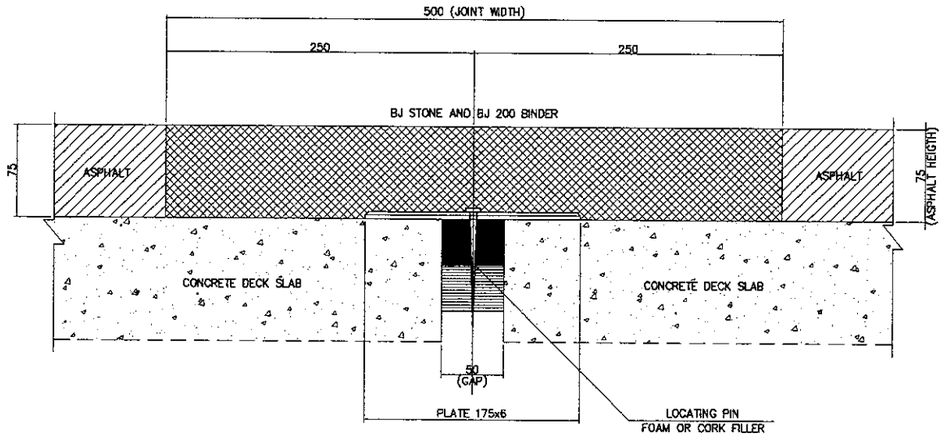

* MAXIMUM MOVEMENT HORIZONTAL 50 MM
* MAXIMUM MOVEMENT VERTICAL 2 MM

DETAIL - A

SCALE 1 : 5

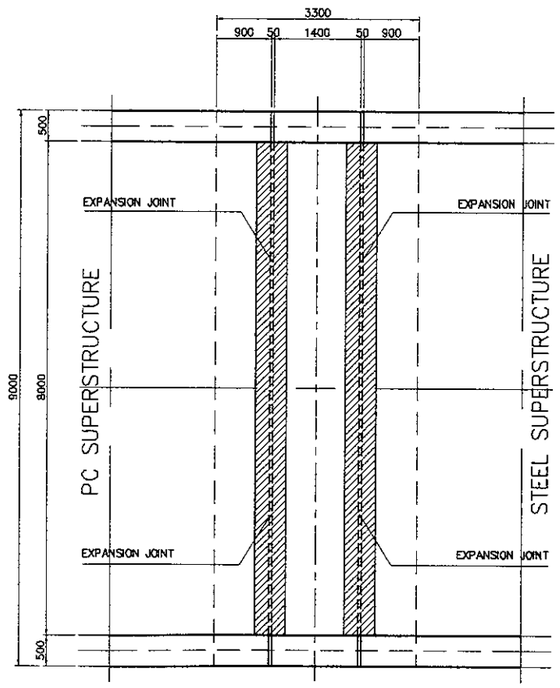

PLAN SECTION

SCALE 1 : 100

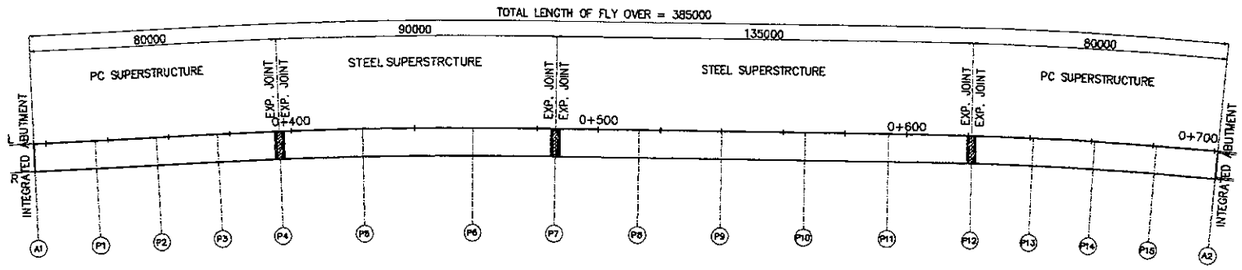

KEY PLAN

SCALE 1 : 2000

NOTES :

1. THE SAME CONDITION WITH HIGHWAY EXPANSION JOINT
2. ALL DIMENSIONS ARE IN MILIMETERS

JAPAN INTERNATIONAL COOPERATION AGENCY KATAHIRA & ENGINEERS INTERNATIONAL	DESIGNED BY		CHECKED BY		SUBMITTED BY		REPUBLIC OF INDONESIA MINISTRY OF PUBLIC WORKS DIRECTORATE GENERAL OF HIGHWAYS			PROJECT AND LOCATION :	SCALE :	DRAWING TITLE :	DRAWING NO :
	Name	S. MATSUI	Name	T.OKUMURA	Name	M. KIUCHI	APPROVED BY	ir. HERRY VAZA M,Eng.Sc NIP. : 110038400	Sign	DETAILED DESIGN STUDY OF NORTH JAVA CORRIDOR FLYOVER PROJECT GEBANG FLYOVER - CONTRACT PACKAGE 2 (NAGREG - GEBANG) WEST JAVA PROVINCE	1 : 10 1 : 20 1 : 1000	BEARING LAYOUT PLAN	GSM-004
	Sign		Sign		Sign				Date		FULL SIZE A3		SHEET NO : 04 / 12
	Date		Date		Date								

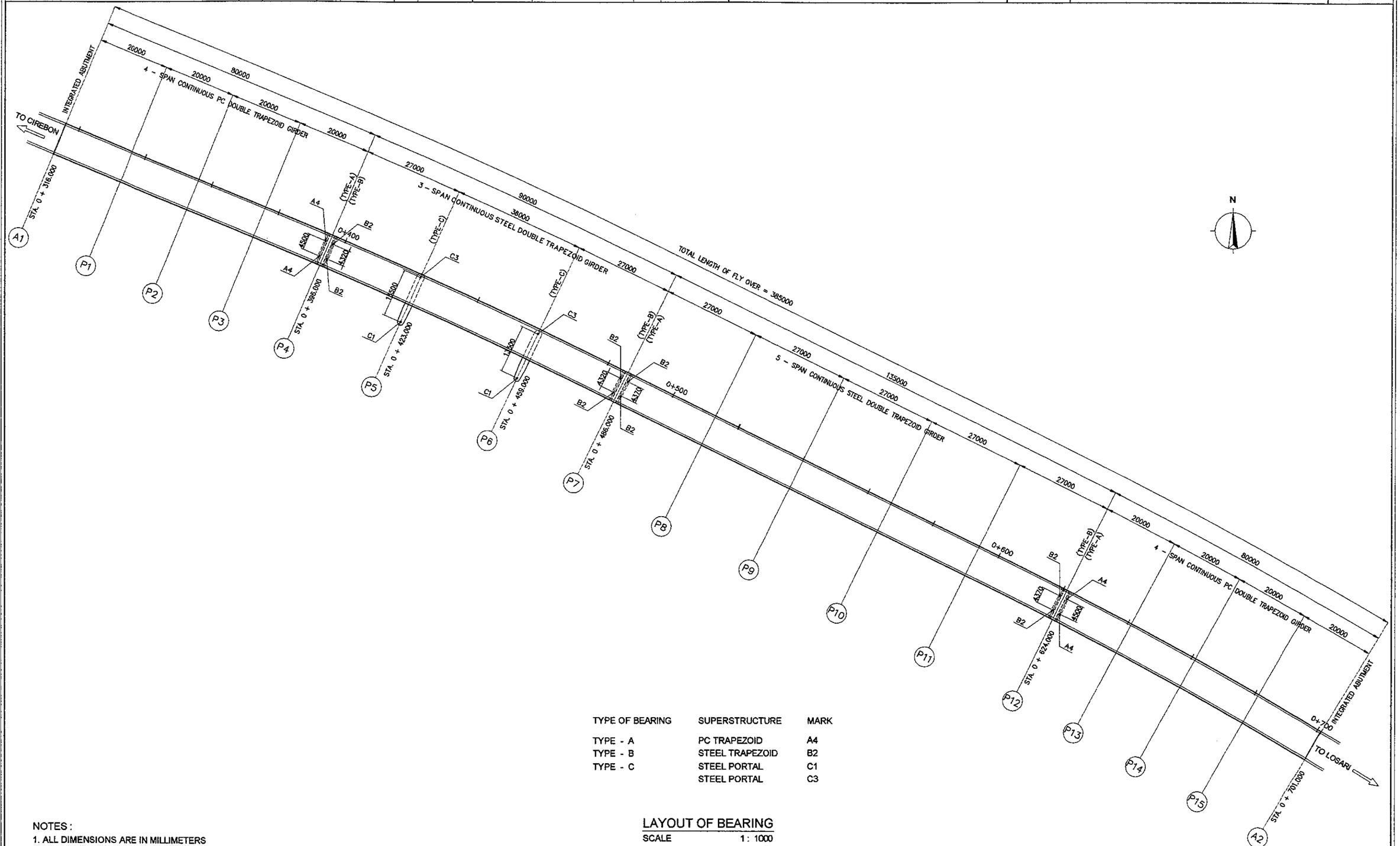

TYPE OF BEARING	SUPERSTRUCTURE	MARK
TYPE - A	PC TRAPEZOID	A4
TYPE - B	STEEL TRAPEZOID	B2
TYPE - C	STEEL PORTAL	C1
	STEEL PORTAL	C3

LAYOUT OF BEARING

SCALE 1 : 1000

NOTES :

1. ALL DIMENSIONS ARE IN MILLIMETERS
2. SEE DETAIL OF BEARING TYPE
3. - TYPE A : MOVABLE BEARING FOR PC
   - TYPE B : MOVABLE BEARING FOR STEEL
   - TYPE C : FIXED BEARING FOR STEEL

JAPAN INTERNATIONAL COOPERATION AGENCY KATAHIRA & ENGINEERS INTERNATIONAL	DESIGNED BY	CHECKED BY	SUBMITTED BY	REPUBLIC OF INDONESIA MINISTRY OF PUBLIC WORKS DIRECTORATE GENERAL OF HIGHWAYS	PROJECT AND LOCATION :	SCALE :	DRAWING TITLE :	DRAWING NO :
	Name: S. MATSUI	Name: T. OKUMURA	Name: M. KIUCHI		DETAILED DESIGN STUDY OF NORTH JAVA CORRIDOR FLYOVER PROJECT GEBANG FLYOVER - CONTRACT PACKAGE 2 (NAGREG - GEBANG) WEST JAVA PROVINCE	1 : 50 1 : 2000	ARRANGEMENT OF BEARING, STOPPER AND RESTRAINER	GSM-005
	Sign	Sign	Sign	APPROVED BY: Ir. HERRY VAZA M,Eng.Sc NIP. : 110038400		FULL SIZE A3		SHEET NO : 05 / 12
	Date	Date	Date	Sign / Date				

STEEL SUPERSTRUCTURE

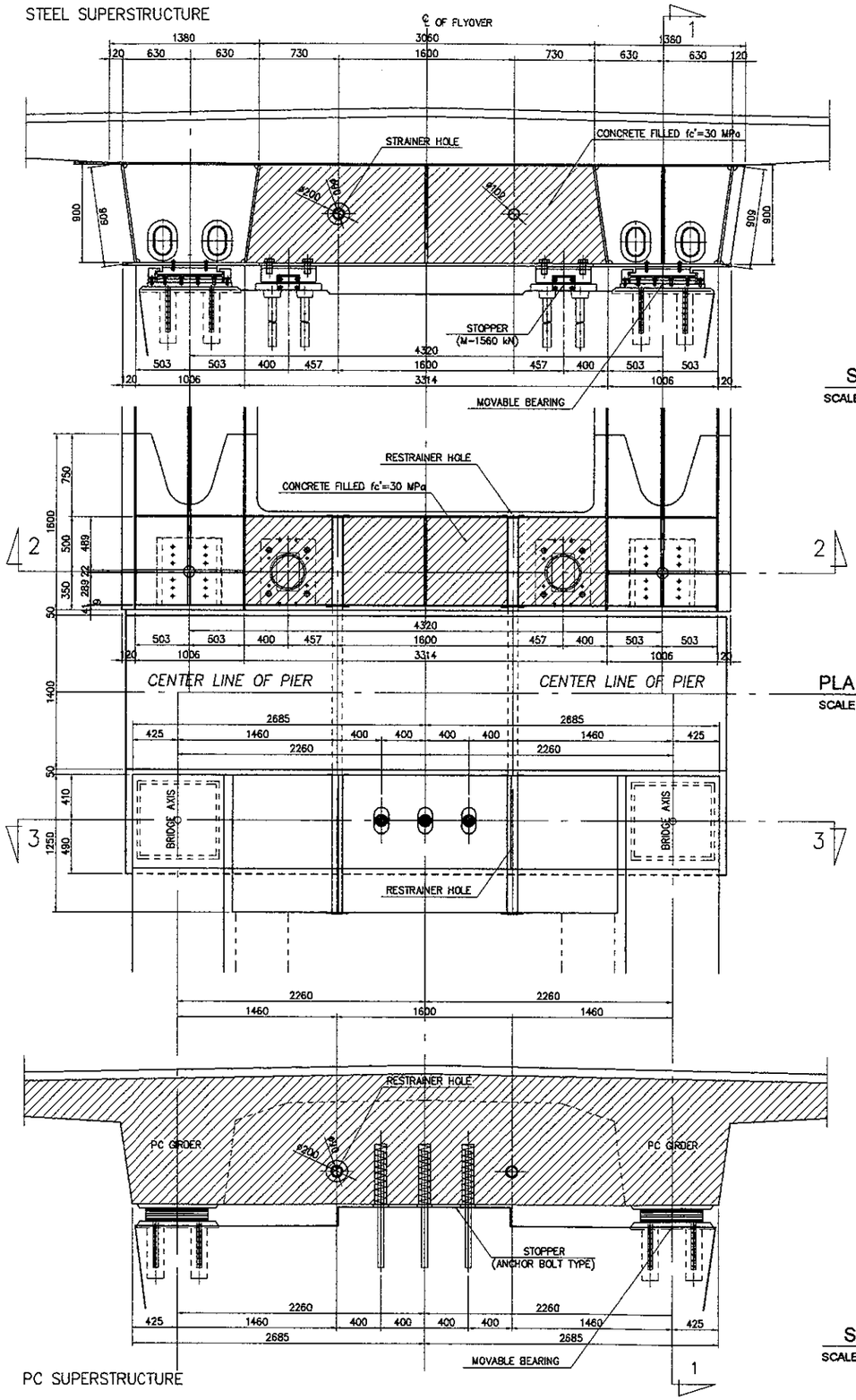

SECTION 2-2
SCALE 1 : 50

PLAN OF SECTION
SCALE 1 : 50

SECTION 3-3
SCALE 1 : 50

PC SUPERSTRUCTURE

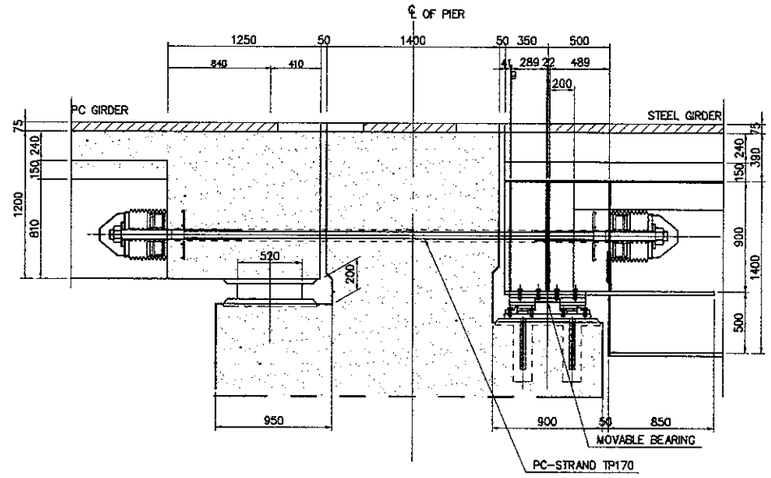

SECTION 1-1
SCALE 1 : 50

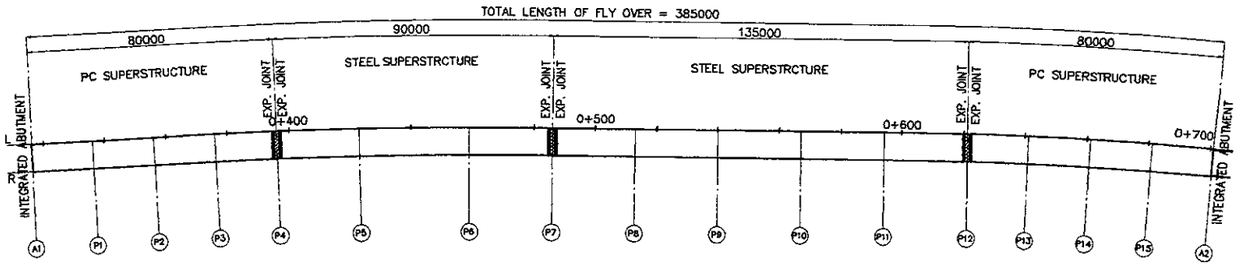

KEY PLAN
SCALE 1 : 2000

NOTES :
ALL DIMENSIONS ARE IN MILLIMETERS

JICA JAPAN INTERNATIONAL COOPERATION AGENCY / KEI KATAHIRA & ENGINEERS INTERNATIONAL	DESIGNED BY	CHECKED BY	SUBMITTED BY	REPUBLIC OF INDONESIA MINISTRY OF PUBLIC WORKS DIRECTORATE GENERAL OF HIGHWAYS	PROJECT AND LOCATION :	SCALE :	DRAWING TITLE :	DRAWING NO :
	Name: S. MATSUI	Name: T. OKUMURA	Name: M. KIUCHI		DETAILED DESIGN STUDY OF NORTH JAVA CORRIDOR FLYOVER PROJECT GEBANG FLYOVER - CONTRACT PACKAGE 2 (NAGREG - GEBANG) WEST JAVA PROVINCE	1 : 10 / 1 : 2000	DETAIL OF BEARING TYPE-A4	GSM-006
	Sign	Sign	Sign	APPROVED BY: Ir. HERRY VAZA M,Eng.Sc NIP. : 110038400		FULL SIZE A3		SHEET NO : 06 / 12
	Date	Date	Date	Sign / Date				

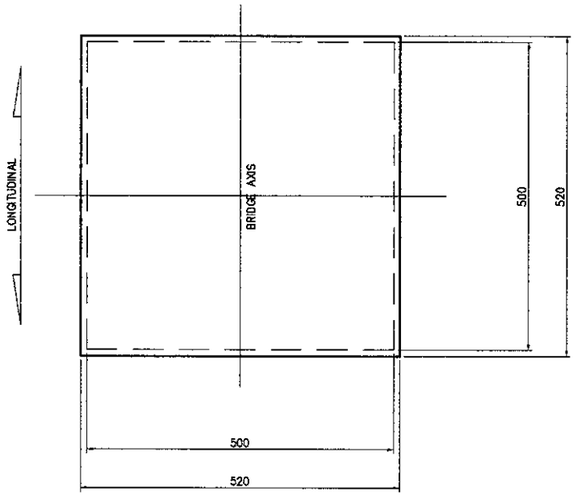

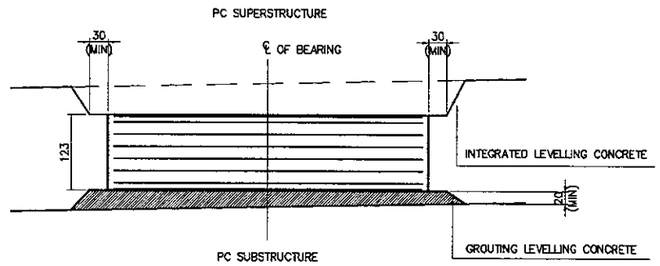

BEARING SEATING DETAIL

SCALE 1 : 10

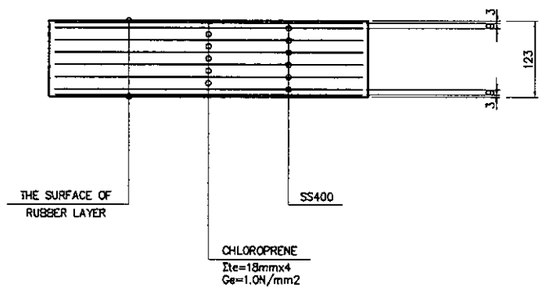

MOVABLE BEARING

SCALE 1 : 10

NAME	SIZE	MATERIAL	UNIT (NOS.)	
RUBBER BEARING (TYPE-4)	520x520x123	CHLOROPRENE SS400	P4	2 (LEFT-RIGTH)
			P12	2 (LEFT-RIGTH)

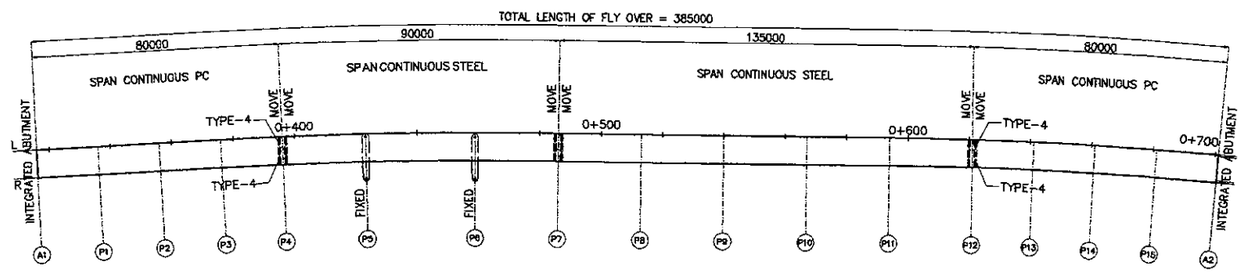

KEY PLAN

SCALE 1 : 2000

NOTES :

ALL DIMENSIONS ARE IN MILLIMETERS

JICA JAPAN INTERNATIONAL COOPERATION AGENCY	DESIGNED BY	CHECKED BY	SUBMITTED BY	REPUBLIC OF INDONESIA MINISTRY OF PUBLIC WORKS DIRECTORATE GENERAL OF HIGHWAYS	PROJECT AND LOCATION :	SCALE :	DRAWING TITLE :	DRAWING NO :
KEI KATAHIRA & ENGINEERS INTERNATIONAL	Name S. MATSUI	Name T. OKUMURA	Name M. KIUCHI	APPROVED BY Ir. HERRY VAZA M,Eng.Sc NIP. : 110038400	DETAILED DESIGN STUDY OF NORTH JAVA CORRIDOR FLYOVER PROJECT GEBANG FLYOVER - CONTRACT PACKAGE 2 (NAGREG - GEBANG) WEST JAVA PROVINCE	1 : 10 1 : 20 1 : 2000	DETAIL OF BEARING TYPE - B2	GSM-007
	Sign	Sign	Sign	Sign		FULL SIZE A3		SHEET NO : 07 / 12
	Date	Date	Date	Date				

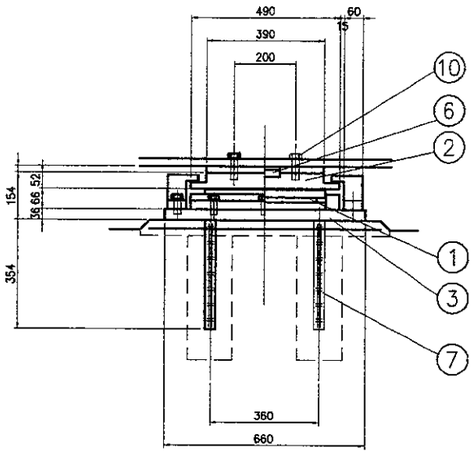

SECTION OF TRANVERSE DIRECTION
SCALE 1 : 20

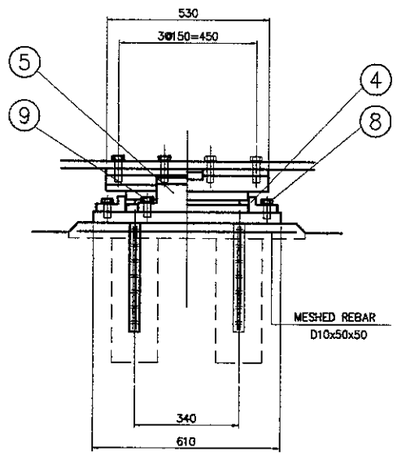

SECTION OF LONGITUDINAL DIRECTION
SCALE 1 : 20

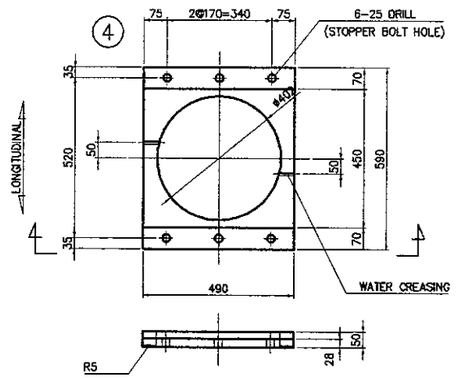

STOPPER
SCALE 1 : 20

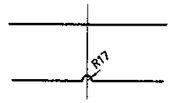

DETAIL OF WATER CREASING
SCALE 1 : 10

DESIGN CONDITION

REACTION FORCE			
MAXIMUM REACTION FORCE	kN	R max	1944
MAXIMUM REACTION	kN	R max2	1018
DEAD LOAD REACTION	kN	Rd	924
LIVE LOAD REACTION	kN	R1 l	510
MAX UP LIFT MOVEMENT	mm	δ c l	0.72
MAX VERTICAL MOVEMENT	mm	δ 1	1.44
VERTICAL SPRING	kN/mm	Kv	710
HORIZONTAL DISPLACEMENT(RUBBER BEARING DISPLACEMENT)			
LONGITUDINAL DISPLACEMENT (NORMAL)	mm	Δ l	8.2
LONGITUDINAL DISPLACEMENT (DYNAMIC ANALYSIS)	mm	Δ l e	50.0
RUBBER BEARING MATERIAL AND CHARACTERISTIC			
TYPE OF RUBBER	—	MATERIAL.G	NR.G10

MATERIAL LIST

(1 UNIT)

NO.	DESCRIPTION	MATERIAL	QTY	WEIGHT (kg)	REMARK
1	MOVABLE RUBBER TYPE BEARING (ELASTIC LOAD BEARING PAD)	NR,SS400,P.T.F.E.	1	42.0	Hips-2000
2	SLIDING PLATE	SM490A,SUS316	1	91.9	
3	BASE PLATE	SM490A	1	112.3	
4	STOPPER PLATE	SM490A	1	51.2	
5	SIDE BLOCK	SCW480NorM490A	2	26.4	
6	SHEAR KEY	SM490AorS35CN	1	1.5	
7	ANCHOR BOLT	SD345	4	11.7	
8	STOPPER BOLT WASHER	STRENGTH 8.8	8	1.5	
9	SIDE BLOCK BOLT WASHER	STRENGTH 8.8	4	0.8	
10	SET BOLT WASHER	STRENGTH 8.8	8	2.6	
11	EYE BOLT	SS400	—	—	M16
	TOTAL			341.9 (kg)	
BRIDGE SEAT MORTAR		NON SCHRINK MORTAR		(m³)	
GRID REINFORCING BAR					
S1	D10x700	SD295	16	6.3	
S2	D10x750	SD295	15	6.3	
	TOTAL			12.6 (kg)	

1. BASED ON HIGHWAY BRIDGE BEARING MANUAL
2. MEMBER WITH O TO BE MELT ZINC PLATING
   JIS H 8641 HDZ55, HDZ35
3. WEIGHT OF MOVABLE RUBBERS BEARING (ELASTIC LOADING PLATE) IS FOR REFERENCE ONLY
4. WEIGHT OF SET BOLT MUST BE COUNTED FOR Ω= 100 AS REFERENCE
5. SHEAR KEY AND PARTNES SHALL BE HIGH DENSITY ZINC COAT 80 μm
6. NUMBER OF EYE BOLT SHALL BE DECIDED BASED ON THE ERECTION REQUIREMENT
7. EYE BOLT HOLE FOR FABRICATION MUST BE LARGES

(8) STOPPER BOLT WASHER M22x55 STRENGTH 8.8
(9) SIDE BLOCK BOLT WASHER M20x55 STRENGTH 8.8
(10) SET BOLD WASHER M20xΩ STRENGTH 8.8

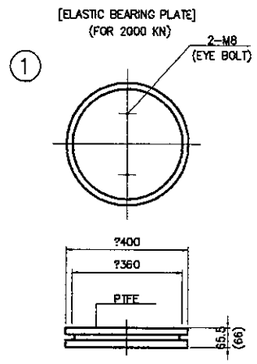

MOVABLE BEARING
SCALE 1 : 20

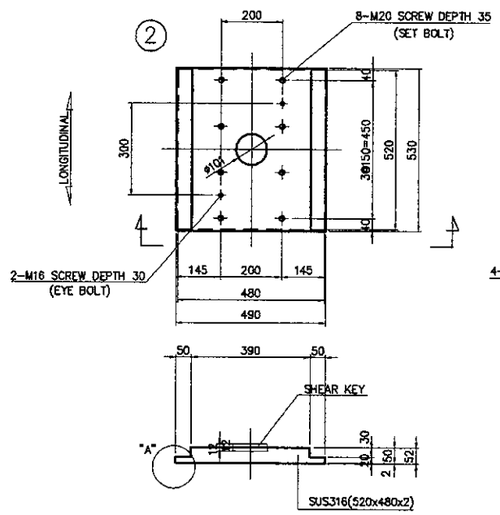

SLIDING PLATE
SCALE 1 : 20

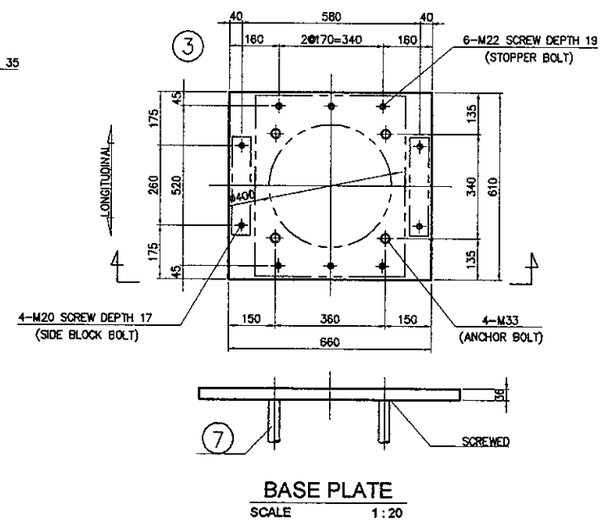

BASE PLATE
SCALE 1 : 20

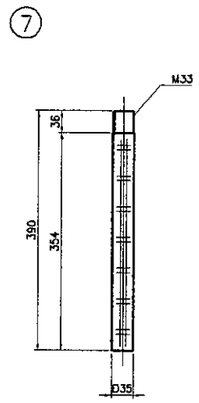

ANCHOR BOLT
SCALE 1 : 10

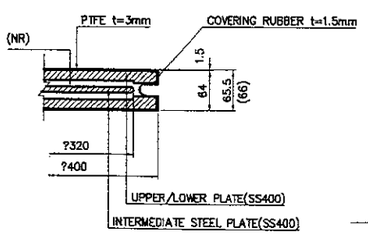

DETAIL OF E.B.P

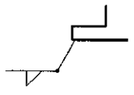

DETAIL OF "A"

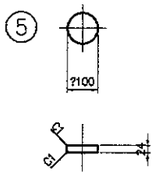

SHEAR KEY
SCALE 1 : 20

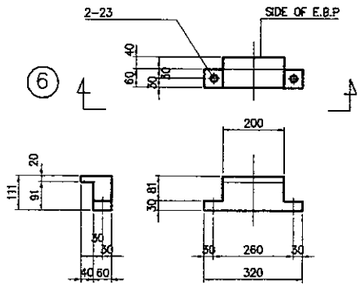

SIDE BLOCK
SCALE 1 : 20

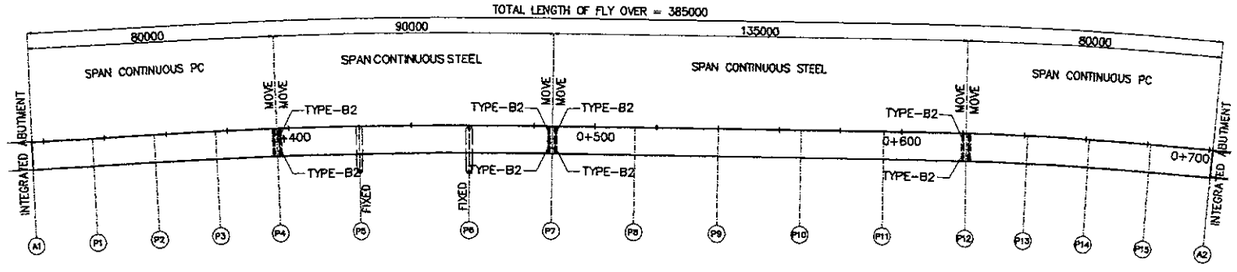

KEY PLAN
SCALE 1 : 2000

JICA JAPAN INTERNATIONAL COOPERATION AGENCY / KEI KATAHIRA & ENGINEERS INTERNATIONAL	DESIGNED BY	CHECKED BY	SUBMITTED BY	REPUBLIC OF INDONESIA MINISTRY OF PUBLIC WORKS DIRECTORATE GENERAL OF HIGHWAYS	PROJECT AND LOCATION :	SCALE :	DRAWING TITLE :	DRAWING NO :
	Name S. MATSUI	Name T.OKUMURA	Name M. KIUCHI	APPROVED BY Ir. HERRY VAZA M,Eng.Sc NIP. : 110038400	DETAILED DESIGN STUDY OF NORTH JAVA CORRIDOR FLYOVER PROJECT GEBANG FLYOVER - CONTRACT PACKAGE 2 (NAGREG - GEBANG) WEST JAVA PROVINCE	1 : 10 1 : 20 1 : 2000	DETAIL OF BEARING TYPE-C1	GSM-08
	Sign	Sign	Sign	Sign				SHEET NO :
	Date	Date	Date	Date		FULL SIZE A3		08 / 12

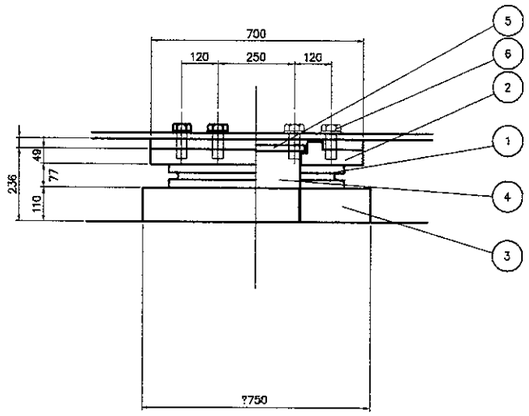

SECTION OF TRANVERSE DIRECTION
SCALE 1 : 20

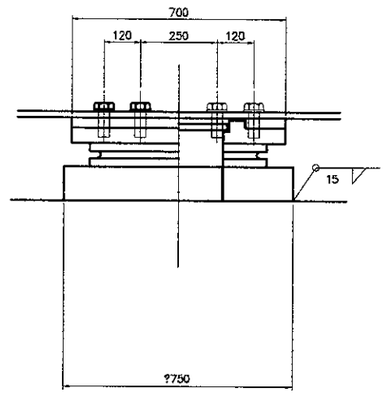

SECTION OF LONGITUDINAL DIRECTION
SCALE 1 : 20

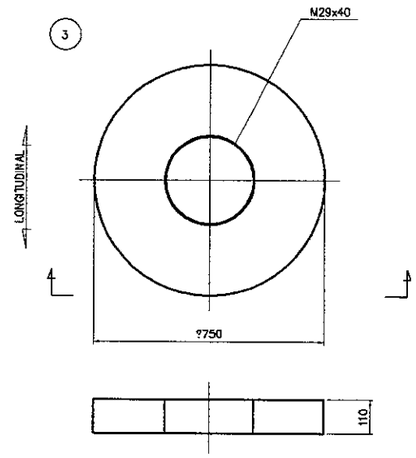

BASE PLATE
SCALE 1 : 20

DESIGN CONDITION

REACTION FORCE			????
MAXIMUM REACTION FORCE	kN	Rmax	2991
MAXIMUM REACTION	kN	Rmax2	2207
DEAD LOAD REACTION	kN	Rd	1761
MAXIMUM VERTICAL MOVEMENT	mm	δr	0.817
VERTICAL SPRING	kN/mm	Kv	890
LONGITUDINAL REACTION	kN	Rhe1	2700
TRANSVERSAL REACTION	kN	Rhe2	2700
SEISMIC UP LIFT FORCE	kN	Ru	528
RUBBER BEARING MATERIAL & CHARECTERISTIC			
RUBBER TYPE	–	MATERIAL.G	NR.G10

MATERIAL LIST (1 UNIT)

NO.	DESCRIPTION	MATERIAL	QTY	WEIGHT (kg)	REMARKS
1	FIXED RUBBER TYPE BEARING	NR,SS400	1	78.7	FxSB
2	SLIDING PLATE	SM490A	1	168.1	
3	BASE PLATE	SM490A	1	324.5	
4	DOWEL	S45CN	1	129.6	
5	RING NUT	S45CN	1	2.3	
6	SET BOLT WHASER	STRENGTH 8.8	12	15.4	
7	EYE BOLT	SS400	—	——	M16
	TOTAL			718.6	(kg)

1. BASED ON HIGHWAY BRIDGE BEARING MANUAL
2. MEMBER WITH O TO MELT ZINC PLATING
   JIS H 8641 HDZ55, HDZ35
3. WEIGHT OF FIXED RUBBER BEARING (ELASTIC LOADING PLATE) IS FOR REFERENCE ONLY
4. WEIGHT OF SET BOLT MUST BE COUNTED FOR φ =100mm AS REFERENCE
5. NUMBER OF EYE BOLT SHALL BE DECIDED BASED ON THE ERECTION REQUIREMENT
6. EYE BOLT HOLE FOR FABRICATION MUST BE RESONABLY LARGES

(6) SET BOLT WASHER M36xφ STREGTH 8.8

FIXED BEARING
[ELASTIC BEARING PLATE]

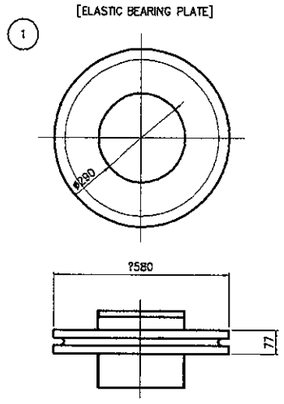

FIXED BEARING
SCALE 1 : 20

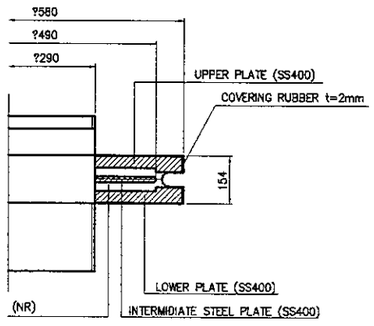

DETAIL OF E.B.P

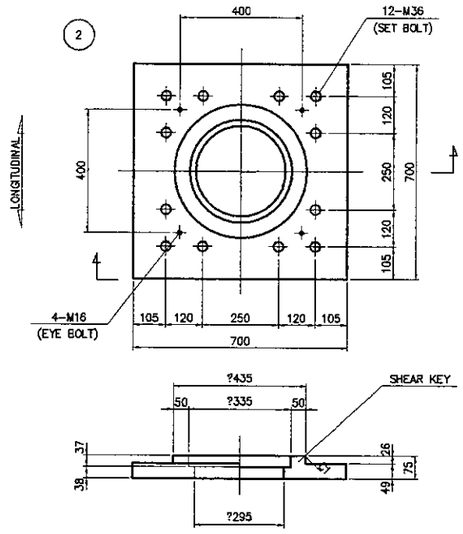

SLIDING PLATE
SCALE 1 : 20

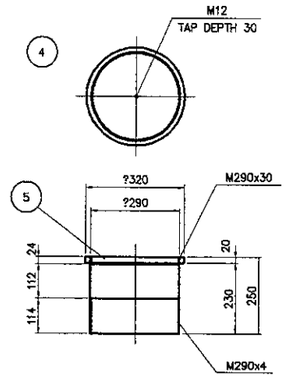

DOWEL
SCALE 1 : 10

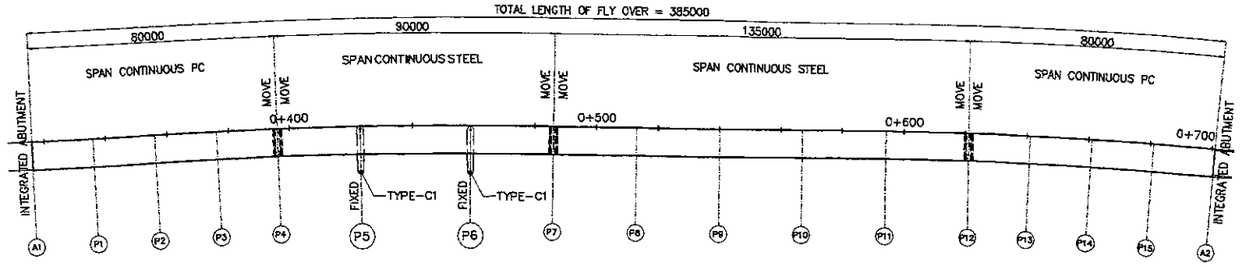

KEY PLAN
SCALE 1 : 2000

JAPAN INTERNATIONAL COOPERATION AGENCY / KATAHIRA & ENGINEERS INTERNATIONAL	DESIGNED BY	CHECKED BY	SUBMITTED BY	REPUBLIC OF INDONESIA MINISTRY OF PUBLIC WORKS DIRECTORATE GENERAL OF HIGHWAYS	PROJECT AND LOCATION :	SCALE :	DRAWING TITLE :	DRAWING NO :
	Name: S. MATSUI	Name: T.OKUMURA	Name: M. KIUCHI	APPROVED BY: Ir. HERRY VAZA M,Eng.Sc NIP. : 110038400	DETAILED DESIGN STUDY OF NORTH JAVA CORRIDOR FLYOVER PROJECT GEBANG FLYOVER - CONTRACT PACKAGE 2 (NAGREG - GEBANG) WEST JAVA PROVINCE	1 : 10 1 : 20 1 : 2000 FULL SIZE A3	DETAIL OF BEARING TYPE-C3	GSM-09
	Sign	Sign	Sign	Sign / Date				SHEET NO : 09 / 12
	Date	Date	Date					

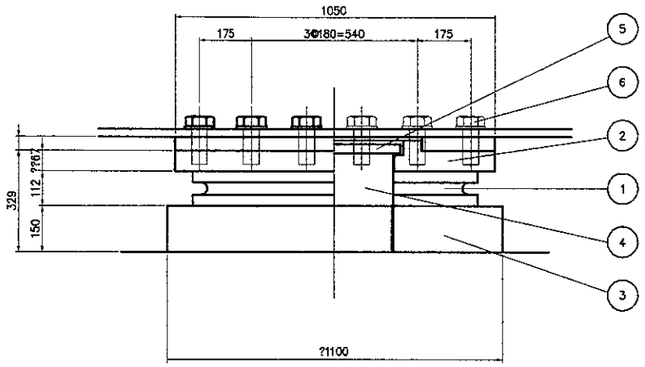

SECTION OF TRANVERSE DIRECTION
SCALE 1 : 20

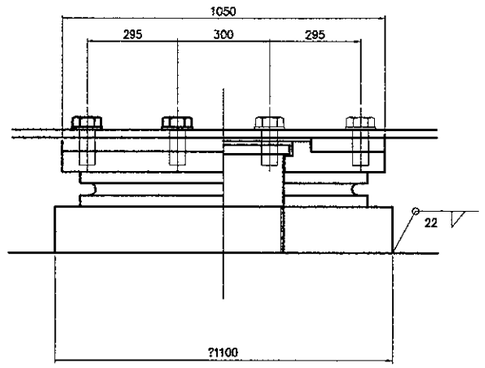

SECTION OF LONGITUDINAL DIRECTION
SCALE 1 : 20

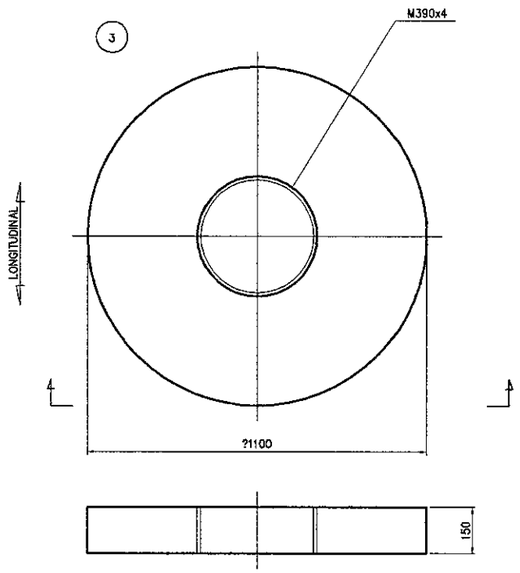

BASE PLATE
SCALE 1 : 20

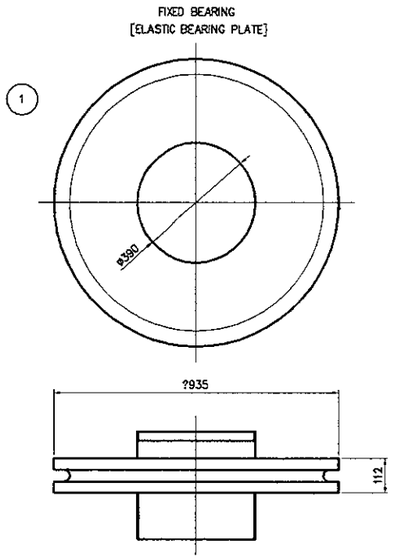

FIXED BEARING
SCALE 1 : 20

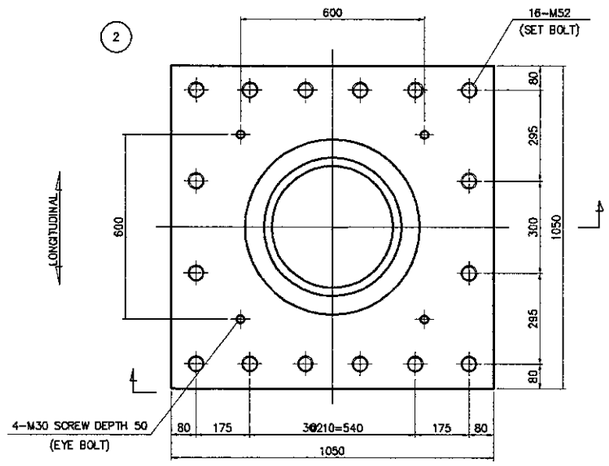

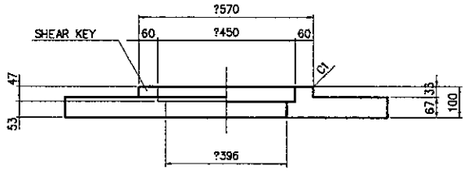

SLIDING PLATE
SCALE 1 : 20

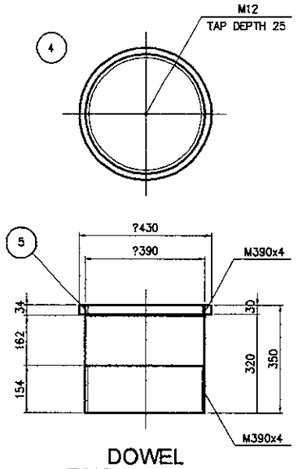

DOWEL
SCALE 1 : 10

DESIGN CONDITION

REACTION FORCE			
MAXIMUM REACTION FORCE	kN	Rmax	8185
MAXIMUM REACTION	kN	Rmax2	5115
DEAD LOAD REACTION	kN	Rd	5046
MAXIMUM VERTICAL MOVEMENT	mm	δr	1.358
VERTICAL SPRING	kN/mm	Kv	2430
LONGITUDINAL REACTION	kN	Rhe1	7600
TRANSVERSAL REACTION	kN	Rhe2	7600
SEISMIC UP LIFT FORCE	kN	Ru	1514
RUBBER BEARING MATERIAL & CHARECTERISTIC			
RUBBER TYPE	–	MATERIAL-C	NR.G10

MATERIAL LIST (1 UNIT)

NO.	DESCRIPTION	MATERIAL	QTY	WEIGHT (kg)	REMARKS
1	FIXED RUBBER TYPE BEARING	NR,SS400	1	313.8	FXSB
2	SUDING PLATE	SM490A	1	518.2	
3	BASE PLATE	SM490A	1	978.3	
4	DOWEL	S45CN	1	328.2	
5	RING NUT	S45CN	1	6.1	
6	SET BOLT WHASER	STRENGTH 8.8	16	51.2	
7	EYE BOLT	SS400	—	———	M30
	TOTAL			2195.8	(kg)

1. BASED ON HIGHWAY BRIDGE BEARING MANUAL
2. MEMBER WITH O TO MELT ZINC PLATING
   JIS H 8641 HDZ55, HDZ35
3. WEIGHT OF FIXED RUBBER BEARING (ELASTIC LOADING PLATE) IS FOR REFERENCE ONLY
4. WEIGHT OF SET BOLT MUST BE COUNTED FOR Ø =100mm AS REFERENCE
5. NUMBER OF EYE BOLT SHALL BE DECIDED BASED ON THE ERECTION REQUIREMENT
6. EYE BOLT HOLE FOR FABRICATION MUST BE RESONABLY LARGES

(6) SET BOLT WASHER M52xØ STREGTH 8.8

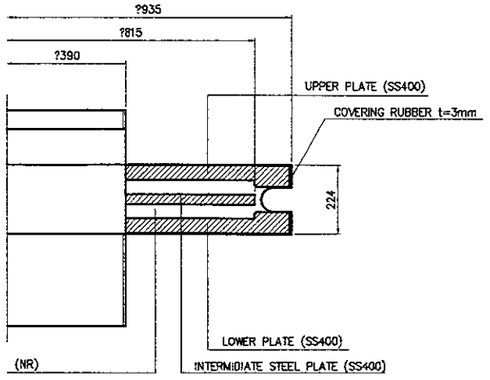

DETAIL OF E.B.P

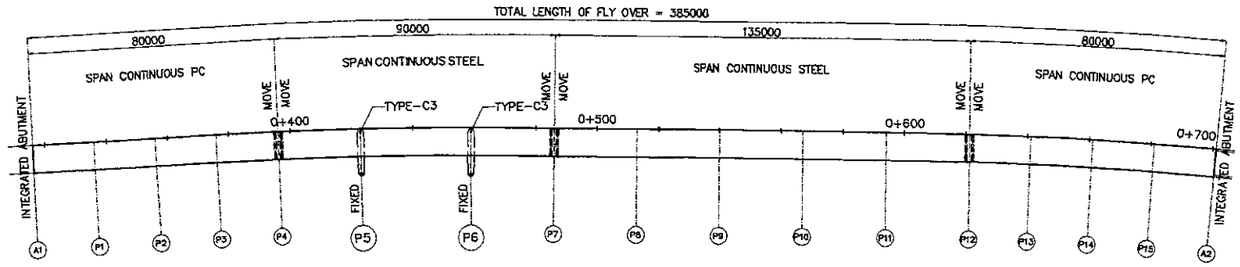

KEY PLAN
SCALE 1 : 2000

JICA JAPAN INTERNATIONAL COOPERATION AGENCY / KEI KATAHIRA & ENGINEERS INTERNATIONAL	DESIGNED BY	CHECKED BY	SUBMITTED BY	REPUBLIC OF INDONESIA MINISTRY OF PUBLIC WORKS DIRECTORATE GENERAL OF HIGHWAYS	PROJECT AND LOCATION :	SCALE :	DRAWING TITLE :	DRAWING NO :
	Name: S. MATSUI	Name: T. OKUMURA	Name: M. KIUCHI		DETAILED DESIGN STUDY OF NORTH JAVA CORRIDOR FLYOVER PROJECT GEBANG FLYOVER - CONTRACT PACKAGE 2 (NAGREG - GEBANG) WEST JAVA PROVINCE	1 : 10 / 1 : 20	DETAIL OF STOPPER	GSM-010
	Sign	Sign	Sign	APPROVED BY: Ir. HERRY VAZA M,Eng.Sc NIP. : 110038400				SHEET NO :
	Date	Date	Date	Sign / Date		FULL SIZE A3		10 / 12

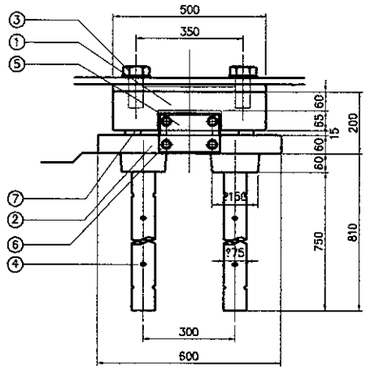

TRANVERSE DIRECTION
SCALE 1 : 20

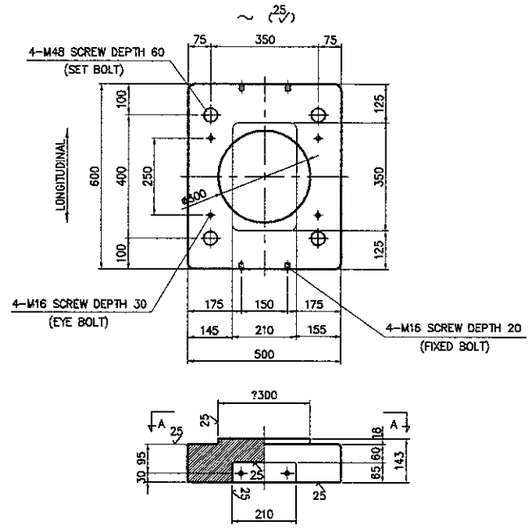

SLIDING PLATE
SCALE 1 : 20

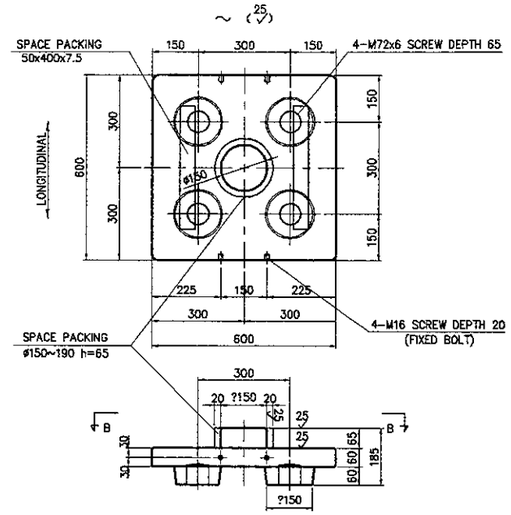

STOPPER PLATE
SCALE 1 : 20

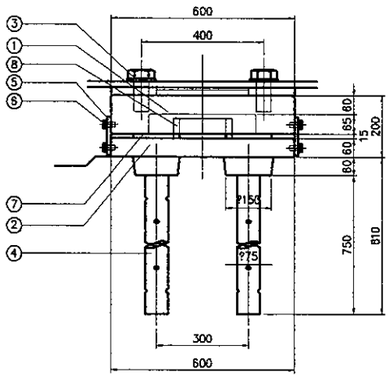

LONGITUDINAL DIRECTION
SCALE 1 : 20

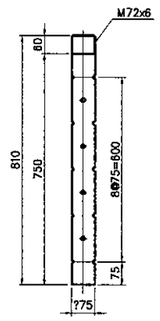

ANCHOR BOLT
SCALE 1 : 20

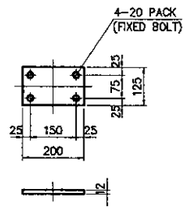

FIXED PLATE
SCALE 1 : 20

DESCRIPTION

NO.	DESCRIPTION	DIMENSI	MATERIAL	QTY	WEIGHT (kg)	REMARKS
1	SLIDING PLATE	600x500x143	SCW480N	1	263.5	
2	STOPPER PART	600x600x185	SCW480N	1	203.6	
3	SET BOLT WHASER	M48xα	STRENGTH 8.8	4	10.7	
4	ANCHOR BOLT	ø75x810	S35CN	4	112.4	M72 SCREW DEPTH 60
5	FIXED PLATE	125x200x12	SS400	2	4.5	
6	FIXED BOLT, WHASER	M16x30	STRENGTH 4.6	8	0.8	
7	SPACE PACKING	50x400x15	NR or CR	2 SET	——	G=8 2
8	CUSHION PACKING	ø150~190 h=65	CR	1 SET	——	Hs = 55° ±5
9	EYE BOLT	M16	SS400	–	——	
					595.5	(kg)

1. BASED ON HIGHWAY BRIDGE BEARING MANUAL
2. MEMBER WITH O TO BE MELT ZINC PLATING
   JIS H 8641 HDZ55, HDZ35
3. SPACE PACKING CAN NOT BE OMITTED TO KEEP THE SPACE BETWEEN SUPERSTRUCTURE AND SUBSTRUCTURE
4. WEIGHT OF SET BOLT MUST BE COUNTED FOR α=100 AS REFERENCE
5. EYE BOLT CAN BE USE FOR HANGING HOOK
6. NUMBER OF EYE BOLT SHALL BE DECICED BASED ON THE ERECTION REQUIREMENT

JAPAN INTERNATIONAL COOPERATION AGENCY KATAHIRA & ENGINEERS INTERNATIONAL	DESIGNED BY	CHECKED BY	SUBMITTED BY	REPUBLIC OF INDONESIA MINISTRY OF PUBLIC WORKS DIRECTORATE GENERAL OF HIGHWAYS	PROJECT AND LOCATION :	SCALE :	DRAWING TITLE :	DRAWING NO :
	Name: S. MATSUI	Name: T. OKUMURA	Name: M. KIUCHI		DETAILED DESIGN STUDY OF NORTH JAVA CORRIDOR FLYOVER PROJECT GEBANG FLYOVER - CONTRACT PACKAGE 2 (NAGREG - GEBANG) WEST JAVA PROVINCE	1 : 20	DETAIL OF RESTRAINER TYPE-2	GSM-011
	Sign	Sign	Sign	APPROVED BY: Ir. HERRY VAZA M,Eng.Sc NIP. : 110038400 — Sign				SHEET NO :
	Date	Date	Date	Date		FULL SIZE A3		11 / 12

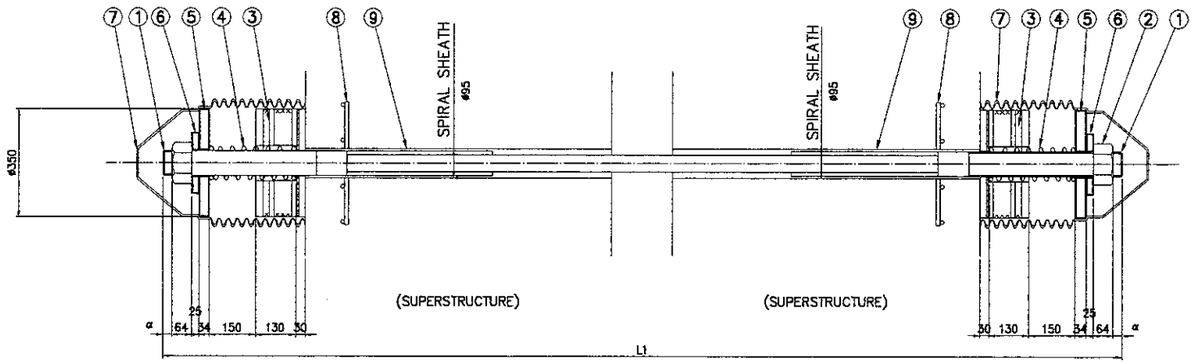

DETAIL OF ATTACHMENT
SCALE 1 : 20

DESIGN CONDITION

DESIGN LOAD	≤ 1428 (kN)
PC WIRE STRAND	TP 170
TYPE	350

MATERIAL LIST (1-SET BRIDGE FALL PREVENTION SYSTEM)

No	NAME	SPECIFICATION	UNIT	QTY	1 PIER	REMARKS
1	PC WIRE STRAND	SWPR	PCS	1		PE-COAT
2	N U T	S45C	SET	2		ZINC PLATING M8 BOLT
3	STOPPER PLATE	CR,NEO PLUS,SS400	PCS	2		
4	SPRING	SWOSC8	SET	2		PE-COAT
5	BUFFER	NEO PLUS,SS400	SET	2		
6	BUFFER	NEO PLUS,SS400	SET	2		
7	PROTECTION CAP	CR or TPE	SET	2		
8	WIRE MESH	SD295	SET	16		
9	SPIRAL	SPCC	SET	2		

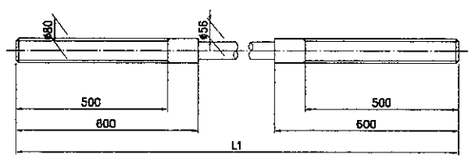

1-PC WIRE STRAND (TP200)
SCALE 1 : 20

① PC鋼より線 (TP170)

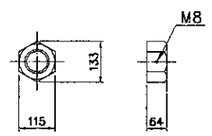

2-N U T
SCALE 1 : 20

② 緩み止め付ナット

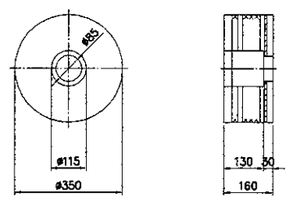

3-STOPPER PLATE
SCALE 1 : 20

③ セーフティストッパー

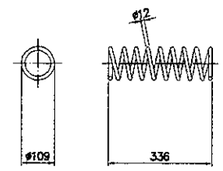

4-SPRING
SCALE 1 : 20

④ コイルスプリング

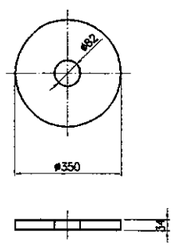

5-BUFFER
SCALE 1 : 20

⑤ 防錆支圧板

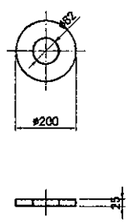

6-BUFFER
SCALE 1 : 20

⑥ 防錆座金

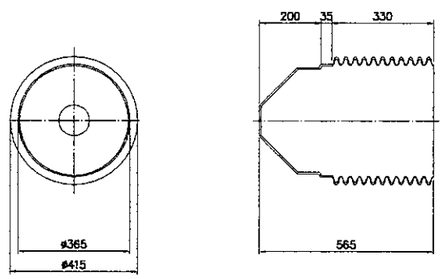

7-PROTECTION CAP
(POLYETHELENE)
SCALE 1 : 20

⑦ 防錆キャップ

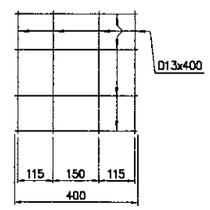

8-WIRE MESH
SCALE 1 : 20

⑧ 用心鉄筋

JAPAN INTERNATIONAL COOPERATION AGENCY / KATAHIRA & ENGINEERS INTERNATIONAL	DESIGNED BY	CHECKED BY	SUBMITTED BY	REPUBLIC OF INDONESIA MINISTRY OF PUBLIC WORKS DIRECTORATE GENERAL OF HIGHWAYS	PROJECT AND LOCATION :	SCALE :	DRAWING TITLE :	DRAWING NO :
	Name: S. MATSUI	Name: T. OKUMURA	Name: M. KIUCHI	APPROVED BY: Ir. HERRY VAZA M.Eng.Sc, NIP. : 110038400	DETAILED DESIGN STUDY OF NORTH JAVA CORRIDOR FLYOVER PROJECT GEBANG FLYOVER - CONTRACT PACKAGE 2 (NAGREG - GEBANG) WEST JAVA PROVINCE	1:10, 1:20	DETAIL OF PARAPET, MEDIAN AND RAILING	GSM-12
	Sign	Sign	Sign	Sign		FULL SIZE A3		SHEET NO : 12 / 12
	Date	Date	Date	Date				

NOTES :

1. DIMENSIONS ARE IN MILLIMETERS
2. STRUCTURAL STEEL SECTIONS ARE TO BE GRADE 400 STEEL TO BE BS 4360
3. BOLTS AND SCREWS ARE TO BE GRADE 6.8 TO BS 3692 ALL BOLTS AND SCREWS ARE TO BE GALVANIZED SHERARDIZED OR OTHERWISE CORROSION PROTECTED
4. ALL STEEL WORK AND WELDING TO BE IN ACCORDANCE WITH CLAUSE 57.07 OF THE SPECIFICATION
5. WELDS ARE 5 MM CONTINOUS FILLET WELDS UNLESS STATED OTHERWISE
6. POSTS ARE TO BE FIXED TRULY VERTICAL
7. RAIL JOINT TO BE LOCATED AT THE QUARTER POINT OF A PANEL
8. RAIL EXPANSION JOINTS ARE TO BE PROVIDED AT ALL BRIDGE DECK AND APPROACH RAMP EXPANSION JOINTS
9. RAILS ARE TO BE CONTINOUS OVER TWO POSTS MAXIMUM RAIL LENGTH IS NOT TO EXCEED 6000
10. ALL FABRICATED STEELWORK IS TO BE HOT DIP GALVANIZED
11. AFTER ERECTION ALL STEELWORK IS TO BE PAINTED TO THE REINFORCEMENTS OF SECTION 57.07 OF THE SPESIFICATION

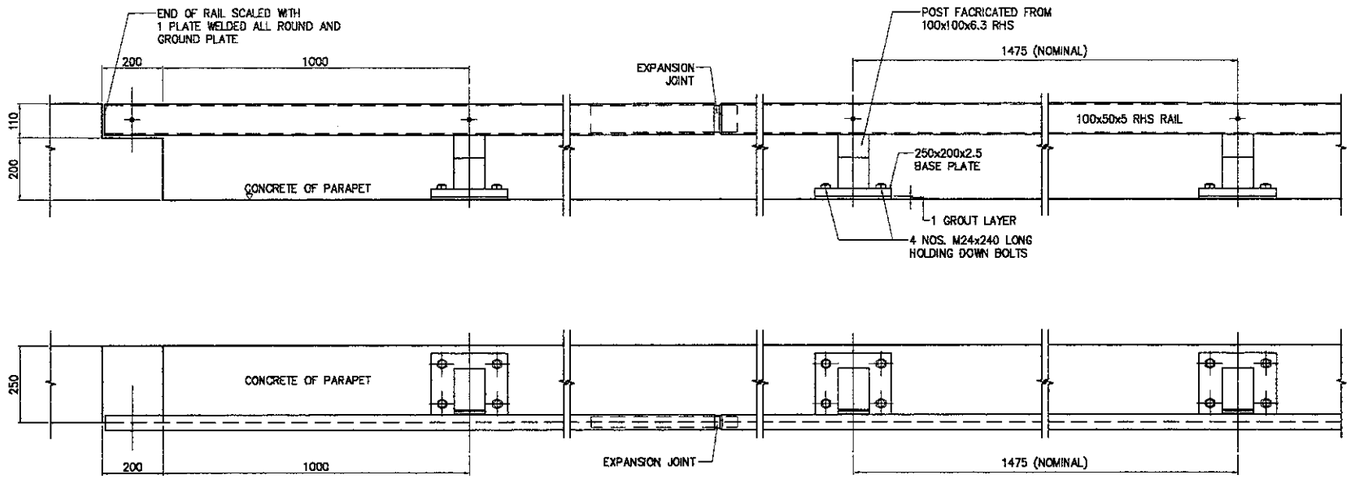

DETAILS FOR PROFILED PLINTH

SCALE : 1:20

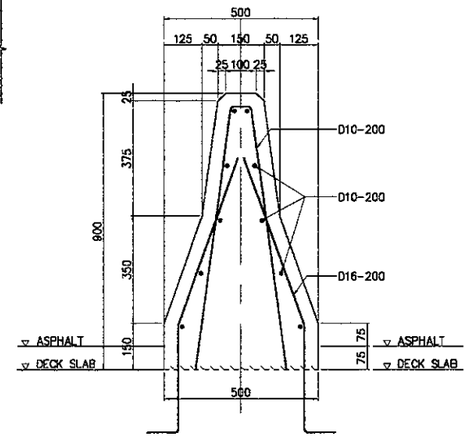

DETAIL OF MEDIAN

SCALE : 1:20

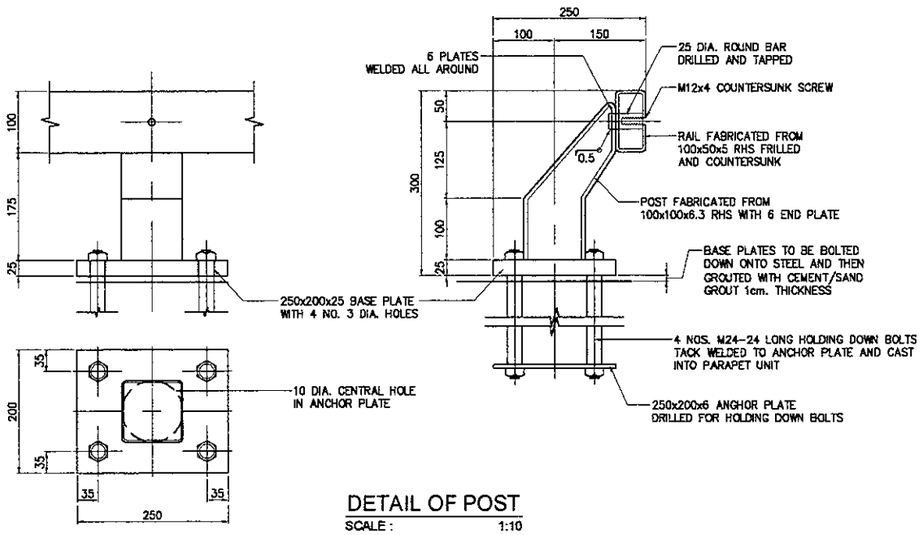

DETAIL OF POST

SCALE : 1:10

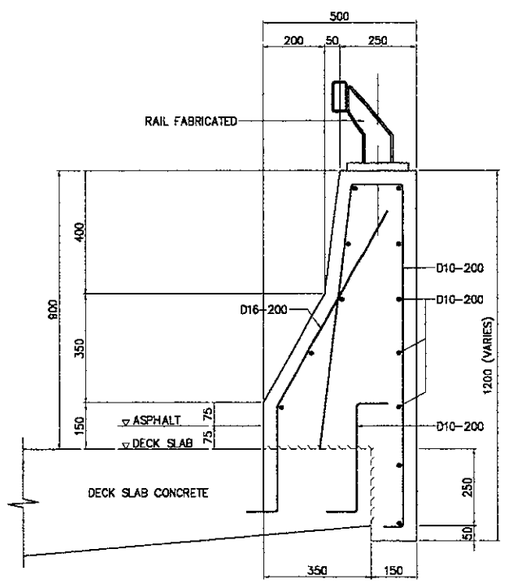

DETAIL OF PARAPET

SCALE : 1:20

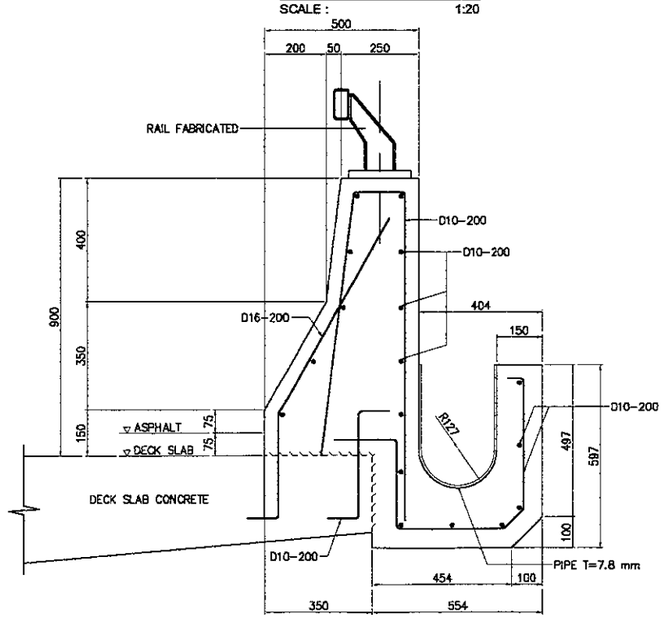

DETAIL OF OUTER GUTTER

SCALE : 1:20

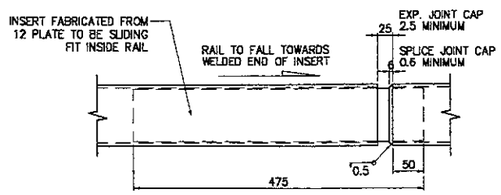

DETAILS OF JOINT

SCALE : 1:10