JAPAN INTERNATIONAL COOPERATION AGENCY KATAHIRA & ENGINEERS INTERNATIONAL	DESIGNED BY	CHECKED BY	SUBMITTED BY	REPUBLIC OF INDONESIA MINISTRY OF PUBLIC WORKS DIRECTORATE GENERAL OF HIGHWAYS	PROJECT AND LOCATION :	SCALE :	DRAWING TITLE :	DRAWING NO :
	Name S. MATSUI	Name T. OKUMURA	Name M. KIUCHI		DETAILED DESIGN STUDY OF NORTH JAVA CORRIDOR FLYOVER PROJECT GEBANG FLYOVER - CONTRACT PACKAGE 2 (NAGREG - GEBANG) WEST JAVA PROVINCE	1:20, 1:40 1:400	INTERMEDIATE CROSS BEAM AND DIAPHRAGM P7 - P12	GST-51
	Sign	Sign	Sign	APPROVED BY Ir. HERRY VAZA M,Eng.Sc NIP. : 110038400 Sign		FULL SIZE A3		SHEET NO :
	Date	Date	Date	Date				51 / 76

DETAIL "A"

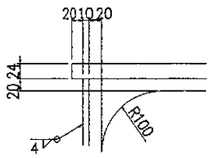

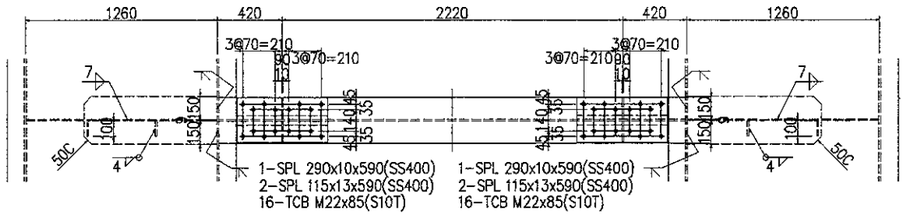

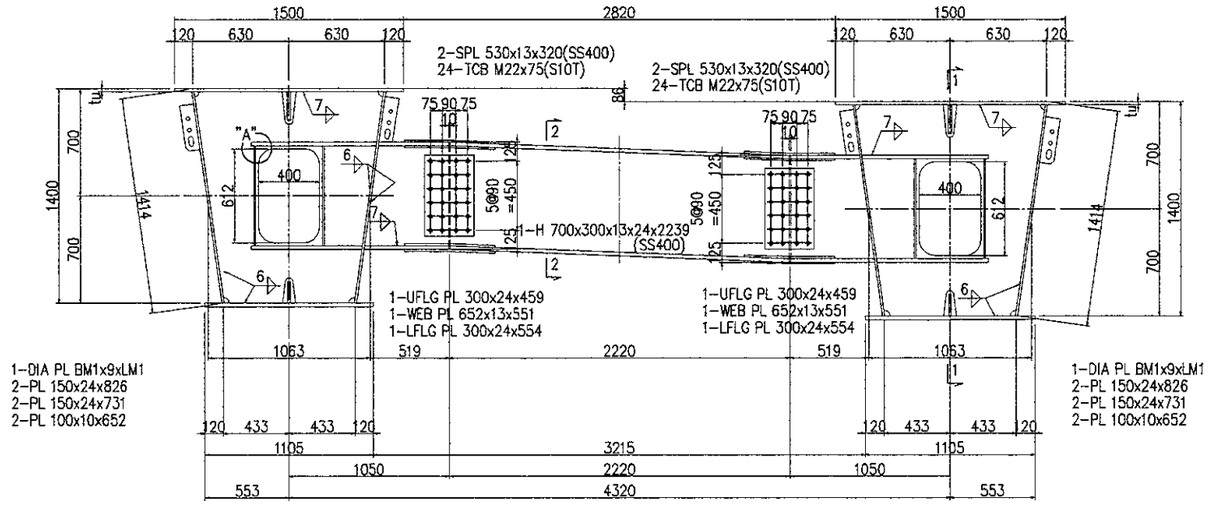

SECTION 1-1

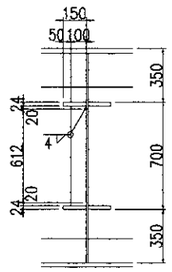

SECTION 2-2

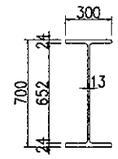

	Fl-1	Fl-2
	C1~C4 C17~C20	C5~C16
tu	20	17
BM1	1380	1383
LM1	1245	1246
箇所数	8	12

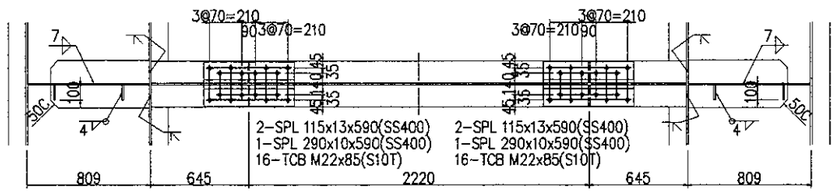

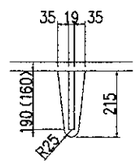

UPPER L.RIB

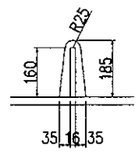

LOWER L.RIB

SCARE LOOPS FOR RIB PLATE
SCALE : 1:20

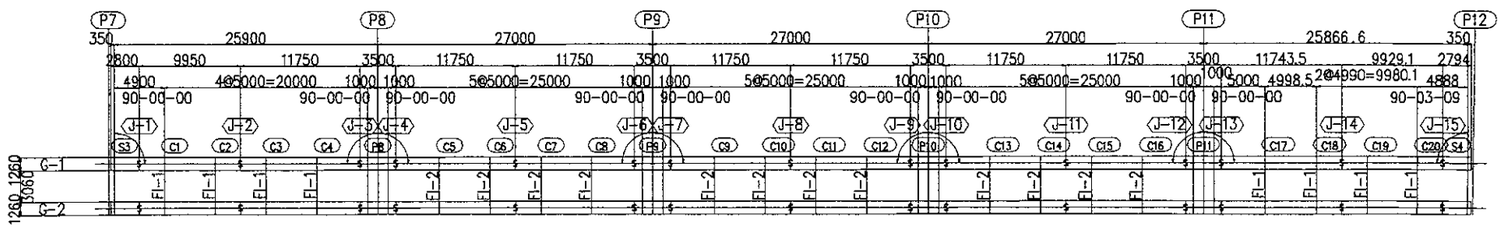

KEY PLAN
SCALE : 1:400

NOTE :

1. ALL STEEL GRADE SHALL BE SMA400AW UNLESS OTHERWISE NOTED
2. MARK "+" SHAW HIGH TENSION TORSION TYPE BOLT M22(S10TW)
3. ALL SCARE LOOPS SHALL BE 35 RADIUS UNLESS OTHERWISE NOTED

JICA JAPAN INTERNATIONAL COOPERATION AGENCY / KEI KATAHIRA & ENGINEERS INTERNATIONAL	DESIGNED BY: Name S. MATSUI, Sign, Date	CHECKED BY: Name T. OKUMURA, Sign, Date	SUBMITTED BY: Name M. KIUCHI, Sign, Date	REPUBLIC OF INDONESIA MINISTRY OF PUBLIC WORKS DIRECTORATE GENERAL OF HIGHWAYS — APPROVED BY Ir. HERRY VAZA M,Eng.Sc NIP. : 110038400, Sign, Date	PROJECT AND LOCATION : DETAILED DESIGN STUDY OF NORTH JAVA CORRIDOR FLYOVER PROJECT GEBANG FLYOVER - CONTRACT PACKAGE 2 (NAGREG - GEBANG) WEST JAVA PROVINCE	SCALE : 1:20, 1:40 — FULL SIZE A3	DRAWING TITLE : END SUPPORT CROSS BEAM AND DIAPHRAGM S1<S2> P7 - P12	DRAWING NO : GST-52 — SHEET NO : 52 / 76

ELEVATION

SECTION 1-1 / SECTION 2-2

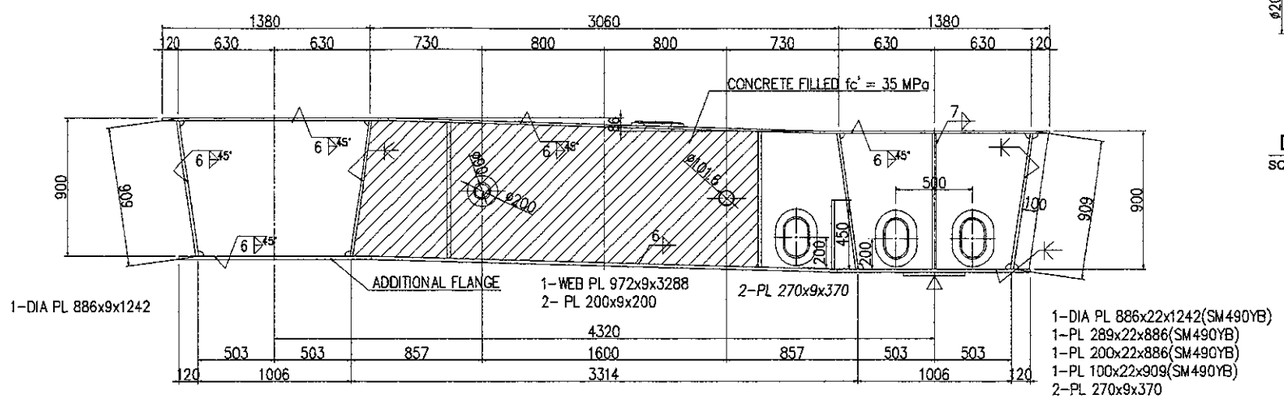

SECTION 3-3

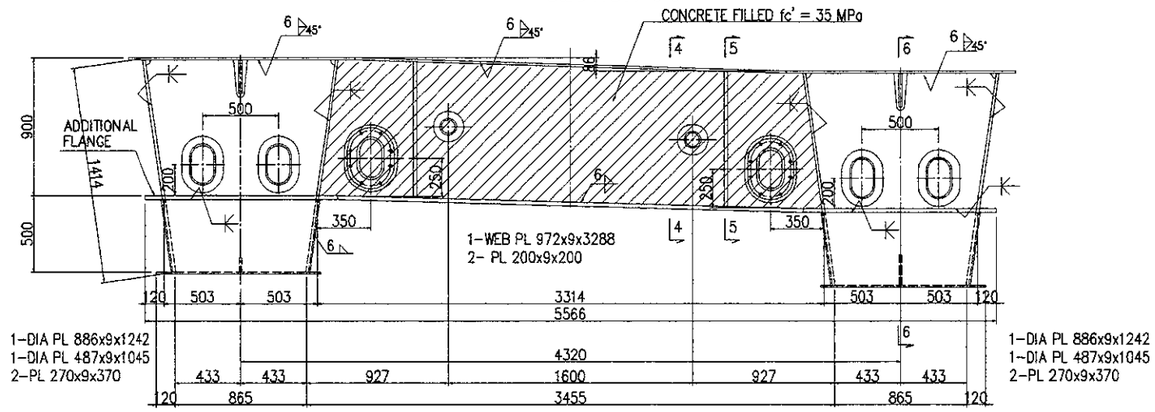

PLAN

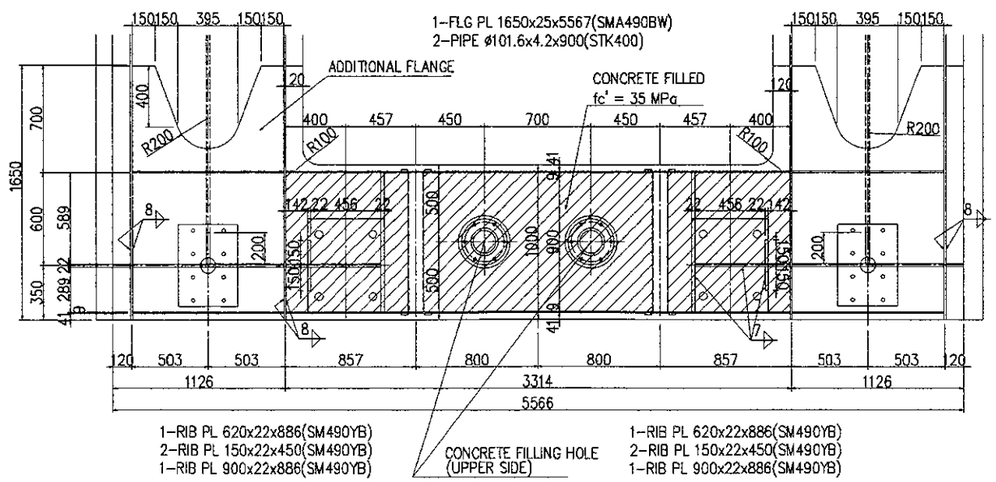

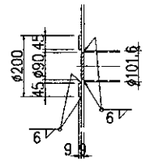

DETAIL "A"
SCALE : 1:20

SECTION 4-4

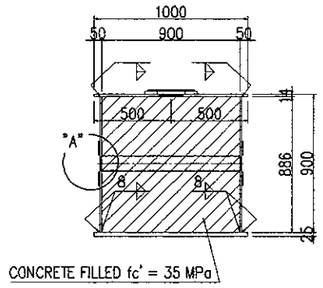

SECTION 5-5

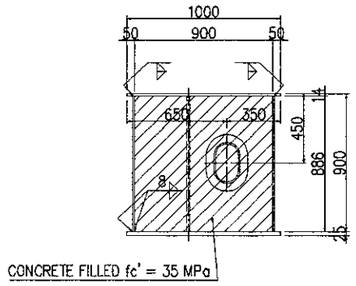

SECTION 6-6

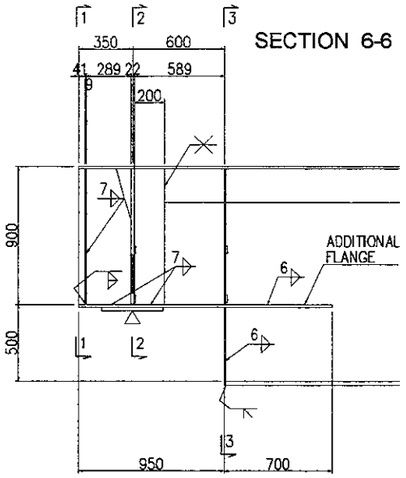

AT DIAPHRAGM / AT CROSS BEAM

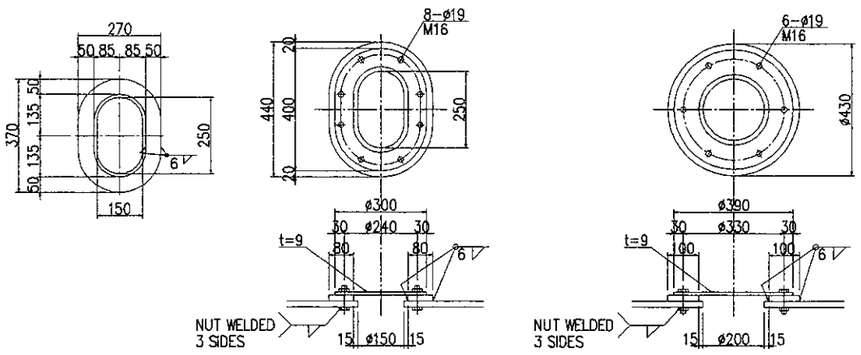

1-PL 300x9x400(SS400)
1-PL 340x9x440
8-BN M16x55(SS400)

DETAIL OF MAN HOLE
SCALE : 1:20

1-PL 390x9x390(SS400)
1-PL 430x14x430(SM490YA)
6-BN M16x65(SS400)

CONCRETE FILLING HOLE
SCALE : 1:20

NOTE :

1. ALL STEEL GRADE SHALL BE SM490YA UNLESS OTHERWISE NOTED
2. ALL SCARE LOOPS SHALL BE 35 RADIUS UNLESS OTHERWISE NOTED

JAPAN INTERNATIONAL COOPERATION AGENCY KATAHIRA & ENGINEERS INTERNATIONAL	DESIGNED BY	CHECKED BY	SUBMITTED BY	REPUBLIC OF INDONESIA MINISTRY OF PUBLIC WORKS DIRECTORATE GENERAL OF HIGHWAYS	PROJECT AND LOCATION :	SCALE :	DRAWING TITLE :	DRAWING NO :
	Name: S. MATSUI	Name: T. OKUMURA	Name: M. KIUCHI		DETAILED DESIGN STUDY OF NORTH JAVA CORRIDOR FLYOVER PROJECT GEBANG FLYOVER - CONTRACT PACKAGE 2 (NAGREG - GEBANG) WEST JAVA PROVINCE	NOT TO SCALE	DEAD LOAD CAMBER DIAGRAM P4 - P7	GST-53
	Sign	Sign	Sign	APPROVED BY: Ir. HERRY VAZA M,Eng.Sc NIP. : 110038400 — Sign				SHEET NO :
	Date	Date	Date	Date		FULL SIZE A3		53 / 76

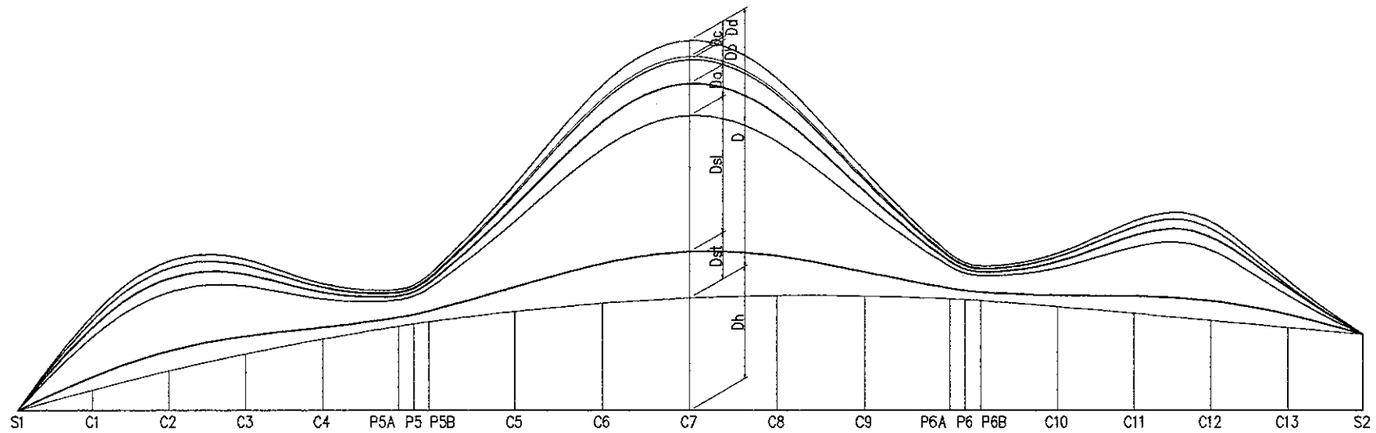

GIRDER G1	S1	C1	C2	C3	C4	P5A	P5	P5B	C5	C6	C7	C8	C9	P6A	P6	P6B	C10	C11	C12	C13	S2
Dh	0.0	135.2	259.4	369.6	465.7	547.8	562.3	576.9	645.9	698.1	732.1	747.8	745.4	725.2	719.5	713.7	675.3	629.8	584.3	538.8	494.2
Dst	0.0	2.0	2.9	2.5	1.5	1.2	1.3	1.4	3.2	5.5	6.5	5.5	3.1	1.3	1.2	1.1	1.4	2.4	2.8	2.0	0.0
Dsl	0.0	6.1	8.5	6.9	3.5	2.3	2.6	2.9	8.5	15.8	18.9	15.7	8.3	2.8	2.4	2.0	3.2	6.7	8.4	6.0	0.0
Da	0.0	1.4	2.0	1.6	0.8	0.5	0.6	0.7	2.0	3.7	4.4	3.7	2.0	0.6	0.6	0.5	0.8	1.6	2.0	1.4	0.0
Db	0.0	1.1	1.5	1.2	0.6	0.4	0.5	0.5	1.5	2.7	3.3	2.7	1.5	0.5	0.4	0.4	0.6	1.2	1.5	1.0	0.0
Dc	0.0	0.1	0.1	0.0	0.1	0.2	0.2	0.2	0.3	0.4	0.5	0.4	0.3	0.2	0.2	0.1	0.0	0.0	0.0	0.0	0.0
Dd	0.0	0.7	1.0	0.8	0.4	0.3	0.3	0.3	1.0	1.8	2.2	1.8	1.0	0.3	0.3	0.2	0.4	0.8	1.0	0.7	0.0
D	0.0	11.3	15.9	13.1	6.8	4.8	5.5	6.1	16.4	30.0	35.7	29.8	16.2	5.7	5.0	4.4	6.4	12.7	15.7	11.2	0.1

GIRDER G2	S1	C1	C2	C3	C4	P5A	P5	P5B	C5	C6	C7	C8	C9	P6A	P6	P6B	C10	C11	C12	C13	S2
Dh	0.0	135.2	259.4	369.6	465.7	547.8	562.3	576.9	645.9	698.1	732.1	747.8	745.4	725.2	719.5	713.7	675.3	629.8	584.3	538.8	494.2
Dst	0.0	2.1	3.1	2.8	1.9	1.7	1.8	1.9	3.7	6.0	6.9	5.9	3.7	1.9	1.8	1.6	1.9	2.7	3.0	2.1	0.0
Dsl	0.0	6.2	8.9	7.5	4.3	3.3	3.6	4.0	9.4	16.5	19.5	16.5	9.3	3.8	3.4	3.1	4.1	7.3	8.8	6.2	0.0
Da	0.0	1.4	2.1	1.8	1.0	0.8	0.8	0.9	2.2	3.9	4.6	3.8	2.2	0.9	0.8	0.7	1.0	1.7	2.0	1.4	0.0
Db	0.0	1.1	1.5	1.3	0.8	0.6	0.6	0.7	1.6	2.9	3.4	2.9	1.6	0.7	0.6	0.5	0.7	1.3	1.5	1.1	0.0
Dc	0.0	0.9	1.3	1.2	0.7	0.4	0.4	0.5	1.2	2.2	2.6	2.2	1.2	0.5	0.4	0.4	0.7	1.2	1.4	0.9	0.0
Dd	0.0	0.7	1.0	0.9	0.5	0.4	0.4	0.5	1.1	1.9	2.3	1.9	1.1	0.4	0.4	0.4	0.5	0.9	1.0	0.7	0.0
D	0.0	12.4	17.9	15.4	9.2	7.1	7.8	8.5	19.3	33.4	39.3	33.3	19.0	8.2	7.5	6.7	8.8	15.1	17.7	12.4	0.1

DEAD LOAD CAMBER DIAGRAM OF GIRDER P4 - P7

NOT TO SCALE

Dh : DEFLECTION DUE TO VERTICAL ALIGNEMENT
Dst : DEFLECTION DUE TO STEEL WEIGTH
Dsl : DEFLECTION DUE TO DECK SLAB
Da : DEFLECTION DUE TO RAILLING AND MEDIAN
Db : DEFLECTION DUE TO PAVEMENT
Dc : DEFLECTION DUE TO OUTER GUTTER AND MEDIAN
Dd : DEFLECTION DUE TO FALLING FENCE FOR RAILLING
De : DEFLECTION DUE TO FUTURE OVERLAY
D : TOTAL DEFLECTION

NOTES :
ALL UNIT IN MILLIMETERS

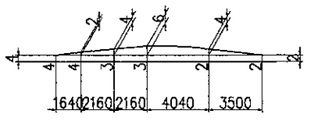

DEAD LOAD CAMBER DIAGRAM OF GIRDER OF P5

NOT TO SCALE

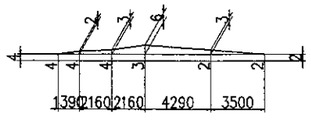

DEAD LOAD CAMBER DIAGRAM OF GIRDER OF P6

NOT TO SCALE

JAPAN INTERNATIONAL COOPERATION AGENCY KATAHIRA & ENGINEERS INTERNATIONAL	DESIGNED BY	CHECKED BY	SUBMITTED BY	REPUBLIC OF INDONESIA MINISTRY OF PUBLIC WORKS DIRECTORATE GENERAL OF HIGHWAYS	PROJECT AND LOCATION :	SCALE :	DRAWING TITLE :	DRAWING NO :
	Name: S. MATSUI	Name: T. OKUMURA	Name: M. KIUCHI	APPROVED BY: Ir. HERRY VAZA M,Eng.Sc NIP. : 110038400	DETAILED DESIGN STUDY OF NORTH JAVA CORRIDOR FLYOVER PROJECT GEBANG FLYOVER - CONTRACT PACKAGE 2 (NAGREG - GEBANG) WEST JAVA PROVINCE	NOT TO SCALE	DEAD LOAD CAMBER DIAGRAM P7 - P12	GST-54
	Sign	Sign	Sign	Sign				SHEET NO :
	Date	Date	Date	Date		FULL SIZE A3		54 / 76

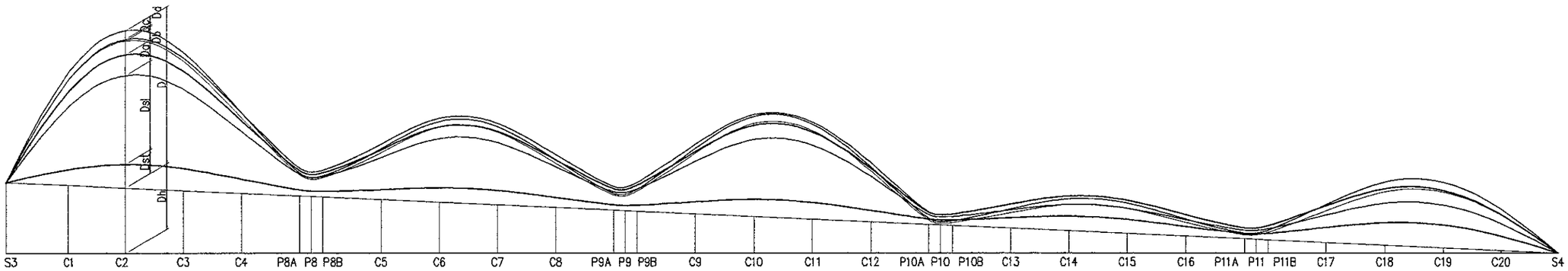

		S3	C1	C2	C3	C4	P8A	P8	P8B	C5	C6	C7	C8	P9A	P9	P9B	C9	C10	C11	C12	P10A	P10	P10B	C13	C14	C15	C16	P11A	P11	P11B	C17	C18	C19	C20	S4
GIRDER G1	Dh	0.0	-44.6	-90.1	-135.6	-181.1	-226.5	-235.6	-244.7	-290.2	-335.7	-381.2	-426.7	-472.2	-481.3	-490.4	-535.9	-581.4	-626.8	-672.3	-717.8	-726.9	-736.0	-781.5	-827.0	-872.5	-918.0	-963.5	-972.6	-981.7	-1027.2	-1072.7	-1118.2	-1163.6	-1208.2
	Dst	0.0	2.8	4.3	4.1	2.6	1.1	0.9	0.9	1.6	2.6	2.7	1.8	0.9	0.9	0.9	2.0	3.1	3.1	2.0	0.9	0.9	0.9	1.7	2.6	2.6	1.6	0.9	0.9	1.0	2.5	4.0	4.3	2.8	0.0
	Dsl	0.0	10.6	16.1	14.9	8.8	2.8	2.3	2.2	5.0	8.7	9.0	5.6	2.2	2.1	2.3	6.5	10.7	10.7	6.5	2.3	2.1	2.2	5.6	9.0	8.8	5.0	2.2	2.3	2.8	8.8	14.9	16.0	10.5	0.0
	Da	0.0	2.5	3.8	3.5	2.1	0.7	0.6	0.5	1.2	2.1	2.1	1.3	0.5	0.5	0.6	1.5	2.5	2.5	1.5	0.6	0.5	0.5	1.3	2.1	2.1	1.2	0.5	0.6	0.7	2.1	3.5	3.8	2.5	0.0
	Db	0.0	1.8	2.8	2.6	1.5	0.5	0.4	0.4	0.8	1.5	1.6	1.0	0.4	0.4	0.4	1.1	1.8	1.8	1.1	0.4	0.4	0.4	1.0	1.6	1.5	0.9	0.4	0.4	0.5	1.5	2.6	2.8	1.8	0.0
	Dc	0.0	0.0	-0.2	-0.5	-0.9	-1.2	-1.2	-1.2	-1.4	-1.5	-1.5	-1.5	-1.5	-1.5	-1.5	-1.5	-1.5	-1.5	-1.5	-1.4	-1.4	-1.4	-1.5	-1.5	-1.4	-1.3	-1.2	-1.2	-1.1	-0.9	-0.5	-0.3	-0.1	0.0
	Dd	0.0	1.2	1.9	1.7	1.0	0.3	0.3	0.2	0.6	1.0	1.0	0.6	0.2	0.2	0.3	0.7	1.2	1.2	0.7	0.3	0.2	0.2	0.6	1.0	1.0	0.6	0.2	0.3	0.3	1.0	1.7	1.8	1.2	0.0
	D	0.0	18.9	28.6	26.3	15.1	4.2	3.3	2.9	7.8	14.4	14.9	8.7	2.7	2.6	3.0	10.5	17.9	17.9	10.5	3.0	2.6	2.7	8.7	14.9	14.5	7.8	2.9	3.3	4.2	15.0	26.2	28.4	18.7	0.0

Dh : DEFLECTION DUE TO VERTICAL ALIGNEMENT
Dst : DEFLECTION DUE TO STEEL WEIGTH
Dsl : DEFLECTION DUE TO DECK SLAB
Da : DEFLECTION DUE TO RAILLING AND MEDIAN
Db : DEFLECTION DUE TO PAVEMENT
Dc : DEFLECTION DUE TO OUTER GUTTER AND MEDIAN
Dd : DEFLECTION DUE TO FALLING FENCE FOR RAILLING
De : DEFLECTION DUE TO FUTURE OVERLAY
D : TOTAL DEFLECTION

NOTES :
ALL UNIT IN MILLIMETERS

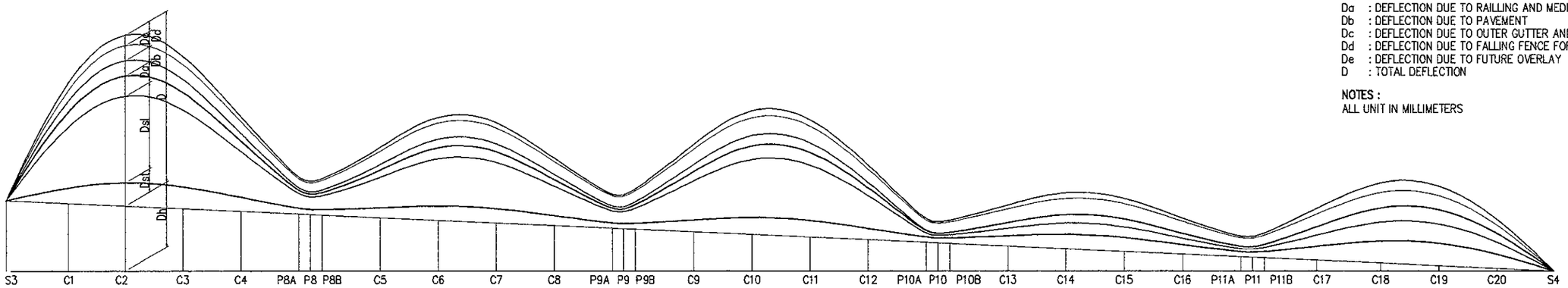

		S3	C1	C2	C3	C4	P8A	P8	P8B	C5	C6	C7	C8	P9A	P9	P9B	C9	C10	C11	C12	P10A	P10	P10B	C13	C14	C15	C16	P11A	P11	P11B	C17	C18	C19	C20	S4
GIRDER G2	Dh	0.0	-44.6	-90.1	-135.6	-181.0	-226.5	-235.6	-244.7	-290.2	-335.7	-381.2	-426.7	-472.2	-481.3	-490.4	-535.9	-581.4	-626.8	-672.3	-717.8	-726.9	-736.0	-781.5	-827.0	-872.5	-918.0	-963.5	-972.6	-981.7	-1027.2	-1072.7	-1118.2	-1163.6	-1208.2
	Dst	0.0	2.8	4.3	4.1	2.5	1.0	0.9	0.9	1.6	2.6	2.7	1.8	0.9	0.9	0.9	2.0	3.1	3.1	2.0	0.9	0.9	0.9	1.7	2.6	2.6	1.6	0.8	0.9	1.0	2.5	4.0	4.2	2.7	0.0
	Dsl	0.0	10.5	15.9	14.7	8.6	2.7	2.2	2.0	4.8	8.5	8.8	5.4	2.0	1.9	2.2	6.3	10.5	10.5	6.3	2.2	1.9	2.0	5.3	8.8	8.5	4.7	1.9	2.1	2.6	8.5	14.5	15.6	10.3	0.0
	Da	0.0	2.5	3.7	3.4	2.0	0.6	0.5	0.5	1.1	2.0	2.0	1.2	0.5	0.4	0.5	1.5	2.4	2.4	1.5	0.5	0.4	0.5	1.2	2.0	2.0	1.1	0.4	0.5	0.6	2.0	3.4	3.6	2.4	0.0
	Db	0.0	1.8	2.8	2.6	1.5	0.5	0.4	0.4	0.8	1.5	1.6	1.0	0.4	0.4	0.4	1.1	1.8	1.8	1.1	0.4	0.4	0.4	0.9	1.6	1.5	0.8	0.3	0.4	0.5	1.5	2.5	2.7	1.8	0.0
	Dc	0.0	1.6	2.6	2.8	2.2	1.6	1.6	1.6	2.2	2.8	2.9	2.4	1.8	1.8	1.8	2.5	3.1	3.1	2.4	1.8	1.7	1.8	2.3	2.9	2.8	2.1	1.5	1.5	1.5	2.2	2.8	2.6	1.7	0.0
	Dd	0.0	1.2	1.9	1.7	1.0	0.3	0.3	0.2	0.6	1.0	1.0	0.6	0.2	0.2	0.3	0.7	1.2	1.2	0.7	0.3	0.2	0.2	0.6	1.0	1.0	0.6	0.2	0.3	0.3	1.0	1.7	1.8	1.2	0.0
	D	0.0	20.5	31.2	29.4	18.0	6.7	5.8	5.5	11.0	18.4	19.0	12.3	5.7	5.6	6.0	14.1	22.2	22.1	14.1	6.0	5.5	5.7	12.2	18.9	18.3	10.9	5.3	5.6	6.5	17.6	28.9	30.7	20.1	0.0

DEAD LOAD CAMBER DIAGRAM OF GIRDER P7 - P12

NOT TO SCALE

Dh : DEFLECTION DUE TO VERTICAL ALIGNEMENT
Dst : DEFLECTION DUE TO STEEL WEIGTH
Dsl : DEFLECTION DUE TO DECK SLAB
Da : DEFLECTION DUE TO RAILLING AND MEDIAN
Db : DEFLECTION DUE TO PAVEMENT
Dc : DEFLECTION DUE TO OUTER GUTTER AND MEDIAN
Dd : DEFLECTION DUE TO FALLING FENCE FOR RAILLING
De : DEFLECTION DUE TO FUTURE OVERLAY
D : TOTAL DEFLECTION

NOTES :
ALL UNIT IN MILLIMETERS

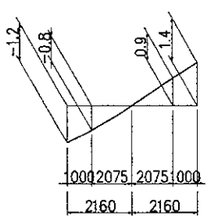

DEAD LOAD CAMBER DIAGRAM OF GIRDER P8

NOT TO SCALE

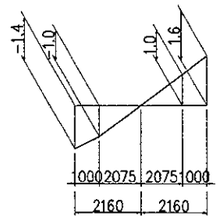

DEAD LOAD CAMBER DIAGRAM OF GIRDER P9

NOT TO SCALE

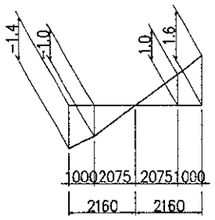

DEAD LOAD CAMBER DIAGRAM OF GIRDER P10

NOT TO SCALE

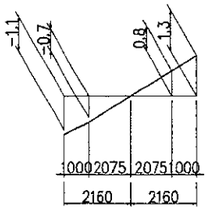

DEAD LOAD CAMBER DIAGRAM OF GIRDER P11

NOT TO SCALE

JAPAN INTERNATIONAL COOPERATION AGENCY / KATAHIRA & ENGINEERS INTERNATIONAL	DESIGNED BY	CHECKED BY	SUBMITTED BY	REPUBLIC OF INDONESIA MINISTRY OF PUBLIC WORKS DIRECTORATE GENERAL OF HIGHWAYS	PROJECT AND LOCATION :	SCALE :	DRAWING TITLE :	DRAWING NO :
	Name: S. MATSUI	Name: T. OKUMURA	Name: M. KIUCHI		DETAILED DESIGN STUDY OF NORTH JAVA CORRIDOR FLYOVER PROJECT GEBANG FLYOVER - CONTRACT PACKAGE 2 (NAGREG - GEBANG) WEST JAVA PROVINCE	1:50, 1:500	DETAIL OF GIRDER P5 (1 OF 3)	GST-55
	Sign	Sign	Sign	APPROVED BY: Ir. HERRY VAZA M,Eng.Sc NIP. : 110038400		FULL SIZE A3		SHEET NO : 55 / 76
	Date	Date	Date	Sign / Date				

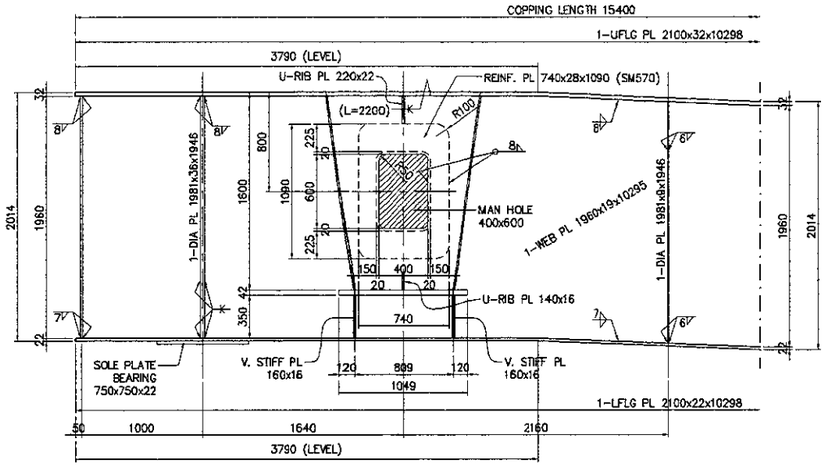

SECTION 2-2
SCALE : 1:50

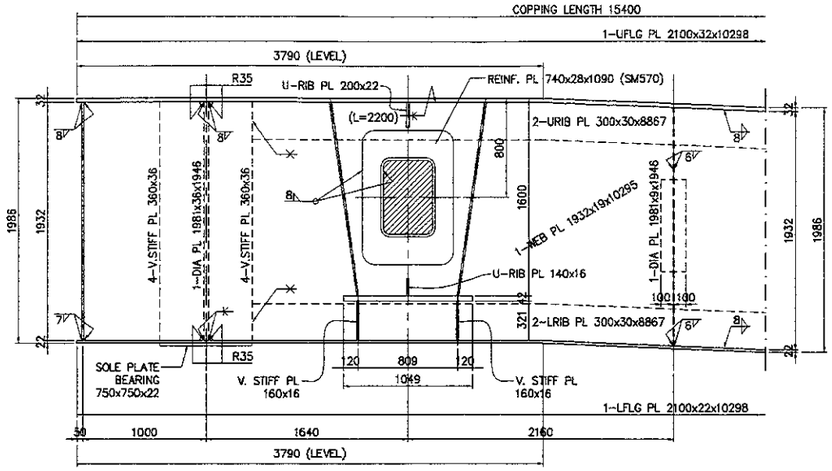

SECTION 1-1
SCALE : 1:50

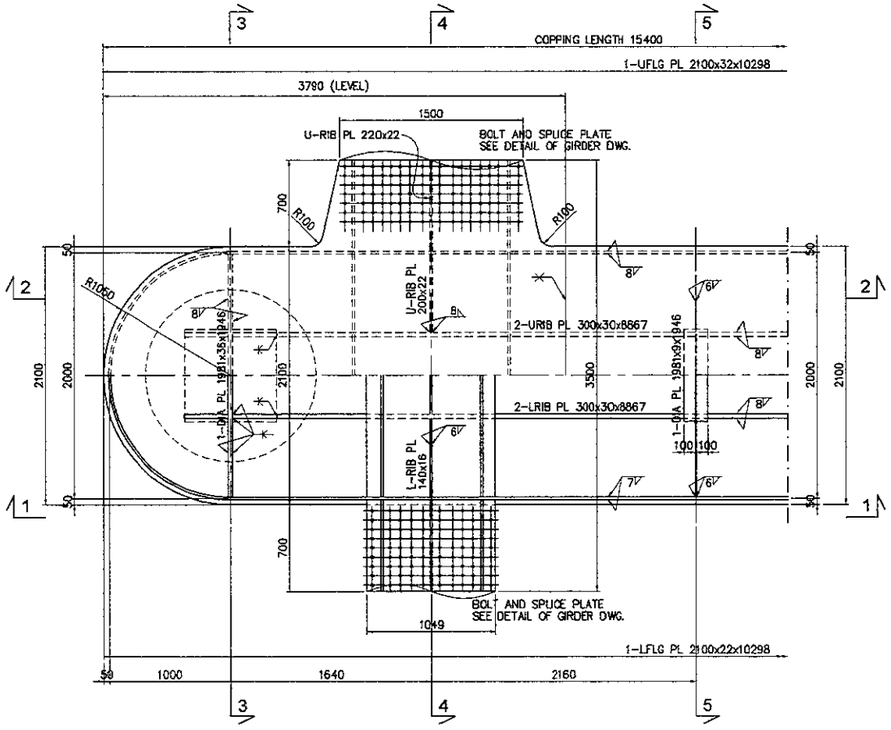

P L A N
SCALE : 1:50

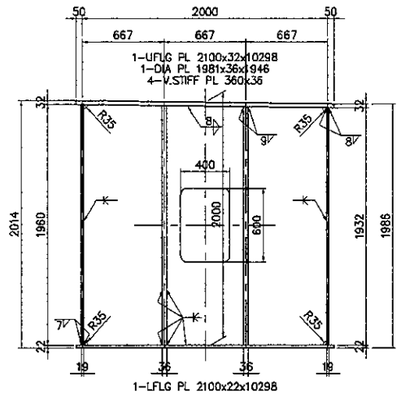

SECTION 3-3
SCALE : 1:50

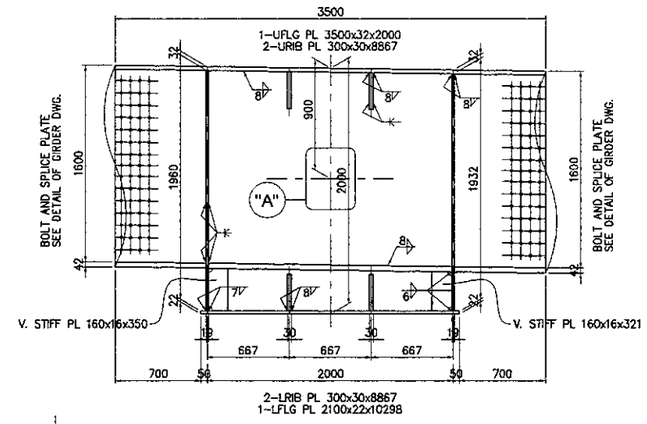

SECTION 4-4
SCALE : 1:50

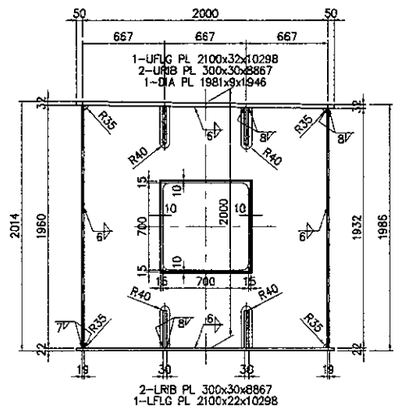

SECTION 5-5
SCALE : 1:50

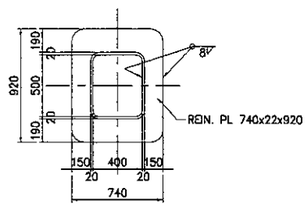

DETAIL "A"
SCALE : 1:50

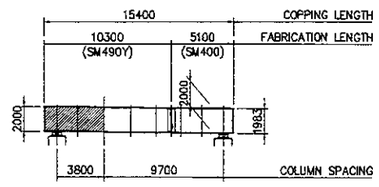

KEY PLAN
SCALE : 1:500

JICA JAPAN INTERNATIONAL COOPERATION AGENCY / KATAHIRA & ENGINEERS INTERNATIONAL	DESIGNED BY	CHECKED BY	SUBMITTED BY	REPUBLIC OF INDONESIA MINISTRY OF PUBLIC WORKS DIRECTORATE GENERAL OF HIGHWAYS	PROJECT AND LOCATION :	SCALE :	DRAWING TITLE :	DRAWING NO :
	Name S. MATSUI	Name T. OKUMURA	Name M. KIUCHI		DETAILED DESIGN STUDY OF NORTH JAVA CORRIDOR FLYOVER PROJECT GEBANG FLYOVER - CONTRACT PACKAGE 2 (NAGREG - GEBANG) WEST JAVA PROVINCE	1:40, 1:50 1:500	DETAIL OF GIRDER P5 (2 OF 3)	GST-56
	Sign	Sign	Sign	APPROVED BY Ir. HERRY VAZA M.Eng.Sc NIP. : 110038400 Sign		FULL SIZE A3		SHEET NO : 56 / 76
	Date	Date	Date	Date				

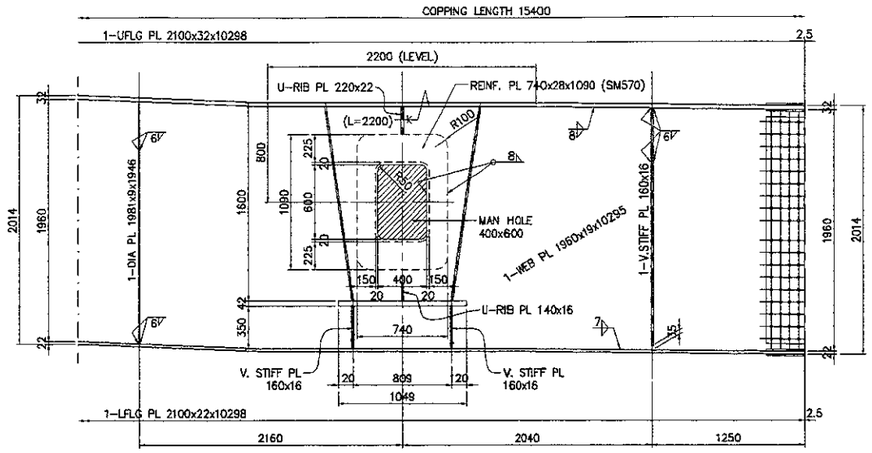

SECTION 2-2
SCALE : 1:50

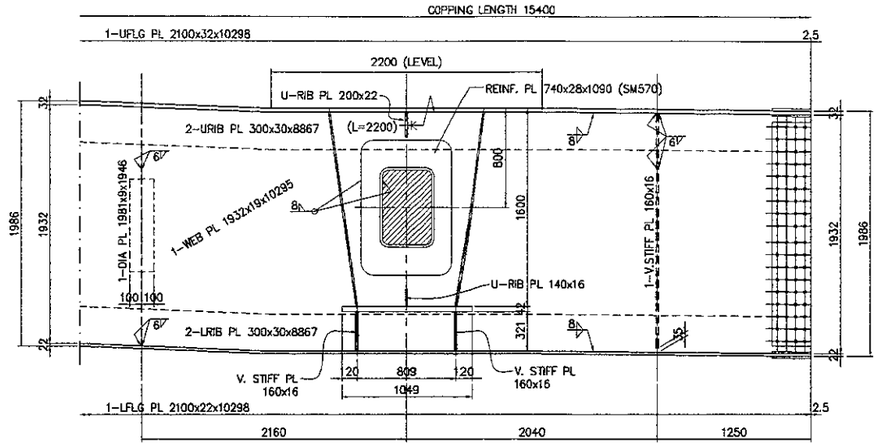

SECTION 1-1
SCALE : 1:50

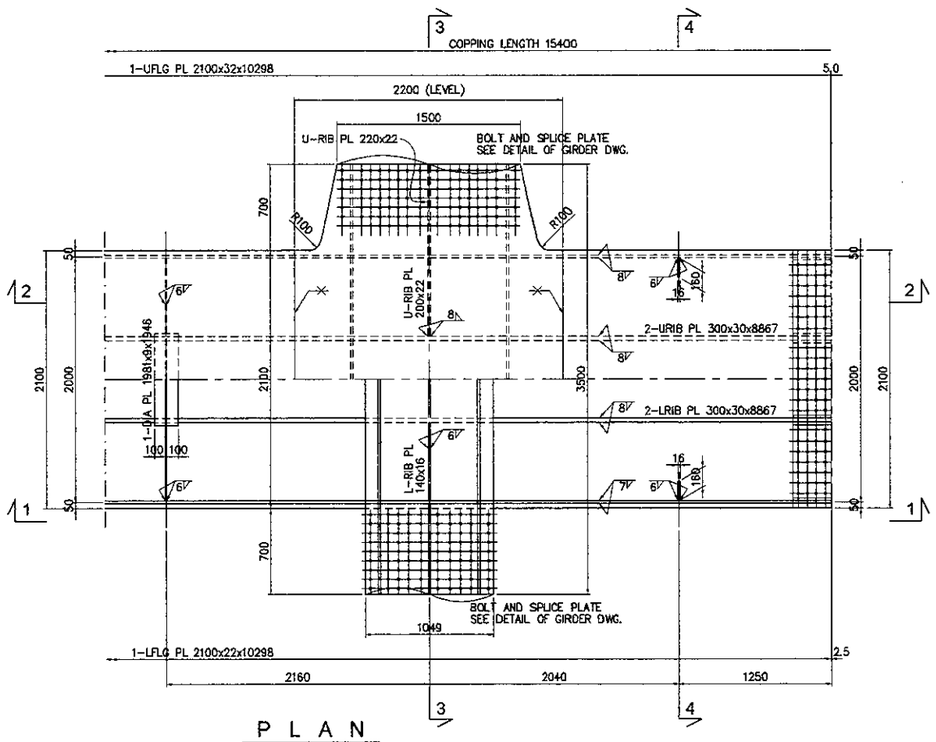

P L A N
SCALE : 1:50

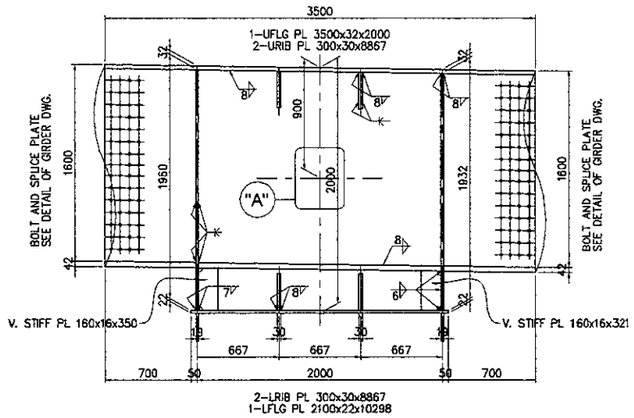

SECTION 3-3
SCALE : 1:50

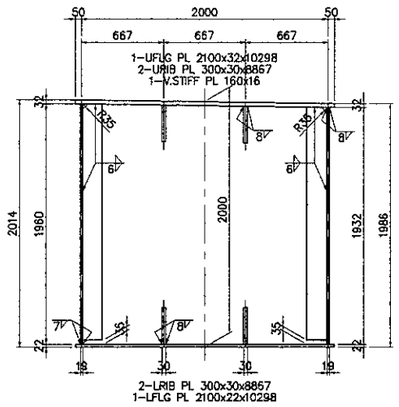

SECTION 4-4
SCALE : 1:50

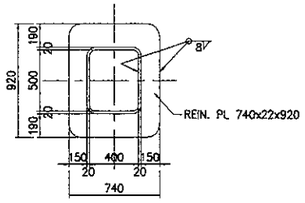

DETAIL "A"
SCALE : 1:50

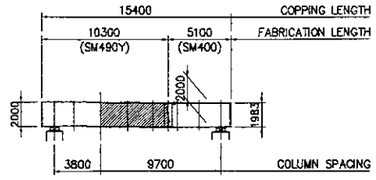

KEY PLAN
SCALE : 1:500

JAPAN INTERNATIONAL COOPERATION AGENCY / KATAHIRA & ENGINEERS INTERNATIONAL	DESIGNED BY	CHECKED BY	SUBMITTED BY	REPUBLIC OF INDONESIA MINISTRY OF PUBLIC WORKS DIRECTORATE GENERAL OF HIGHWAYS	PROJECT AND LOCATION :	SCALE :	DRAWING TITLE :	DRAWING NO :
	Name S. MATSUI	Name T. OKUMURA	Name M. KIUCHI		DETAILED DESIGN STUDY OF NORTH JAVA CORRIDOR FLYOVER PROJECT GEBANG FLYOVER - CONTRACT PACKAGE 2 (NAGREG - GEBANG) WEST JAVA PROVINCE	1:50, 1:500	DETAIL OF GIRDER P5 (3 OF 3)	GST-57
	Sign	Sign	Sign	APPROVED BY ir. HERRY VAZA M,Eng.Sc NIP. : 110038400 Sign		FULL SIZE A3		SHEET NO : 57 / 76
	Date	Date	Date	Date				

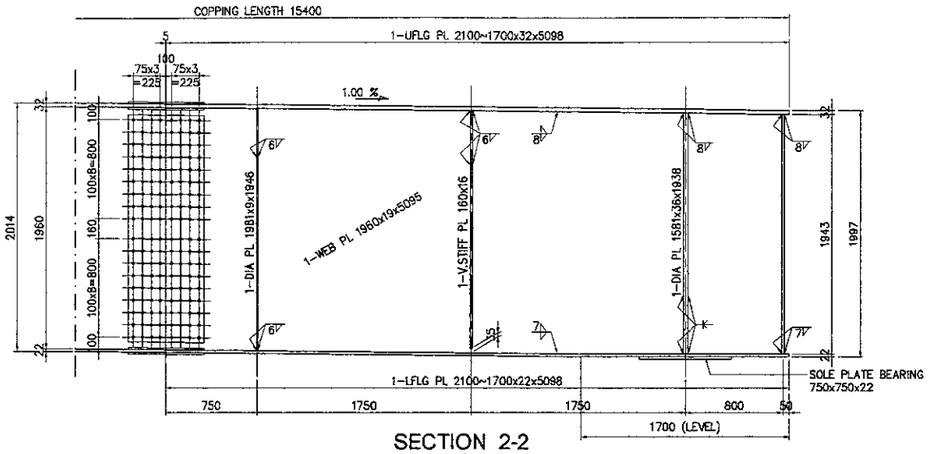

SECTION 2-2
SCALE : 1:50

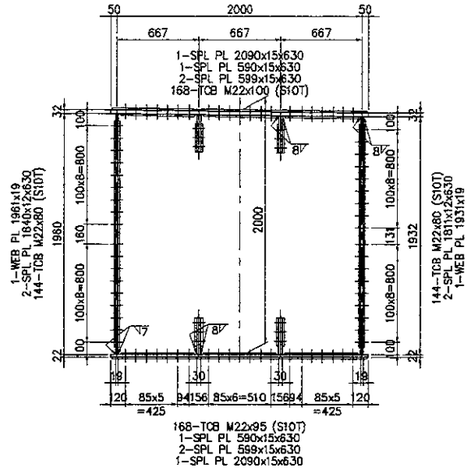

SECTION 3-3
SCALE : 1:50

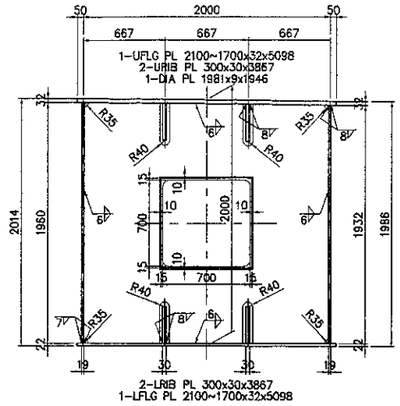

SECTION 4-4
SCALE : 1:50

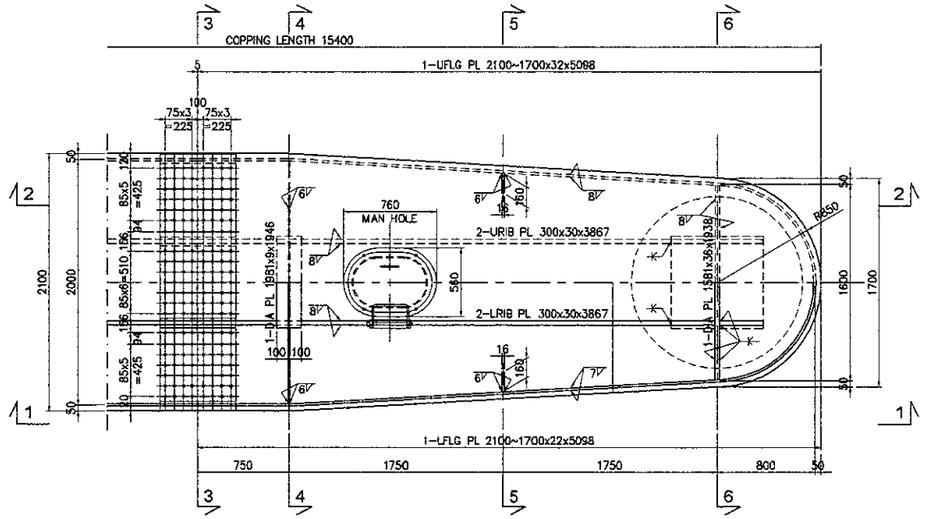

P L A N
SCALE : 1:50

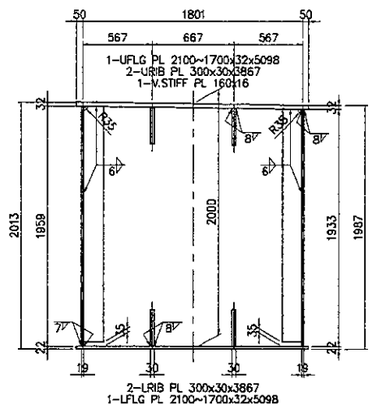

SECTION 5-5
SCALE : 1:50

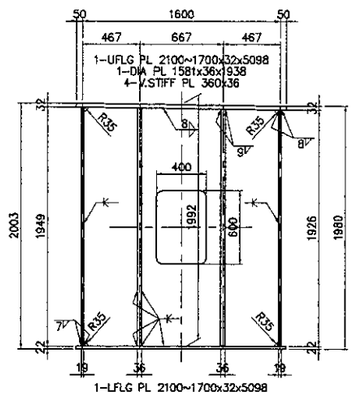

SECTION 6-6
SCALE : 1:50

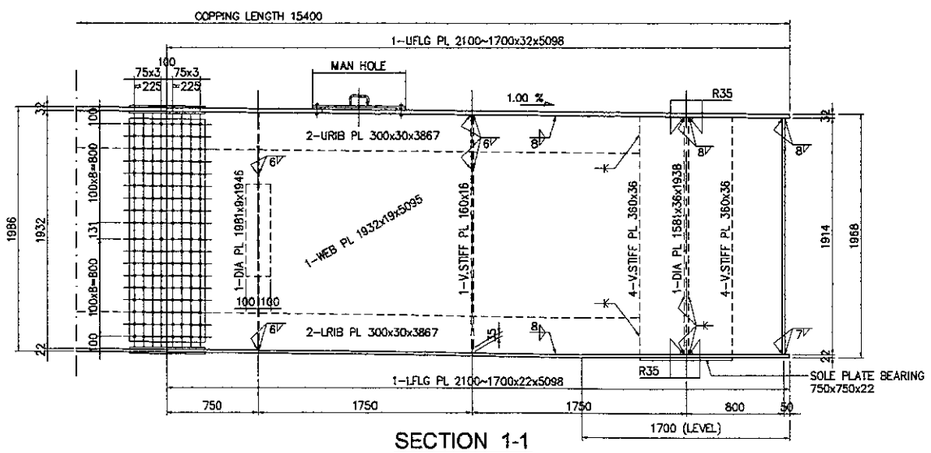

SECTION 1-1
SCALE : 1:50

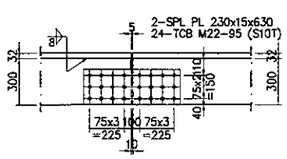

URIB PL FLANGE

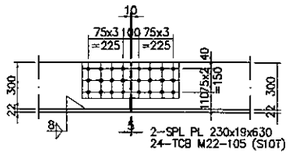

LRIB PL FLANGE

DETAIL OF SPLICE AT RIB PLATE
SCALE : 1:40

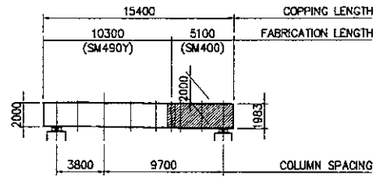

KEY PLAN
SCALE : 1:500

JAPAN INTERNATIONAL COOPERATION AGENCY / KATAHIRA & ENGINEERS INTERNATIONAL	DESIGNED BY	CHECKED BY	SUBMITTED BY	REPUBLIC OF INDONESIA MINISTRY OF PUBLIC WORKS DIRECTORATE GENERAL OF HIGHWAYS	PROJECT AND LOCATION :	SCALE :	DRAWING TITLE :	DRAWING NO :
	Name: S. MATSUI	Name: T. OKUMURA	Name: M. KIUCHI		DETAILED DESIGN STUDY OF NORTH JAVA CORRIDOR FLYOVER PROJECT GEBANG FLYOVER - CONTRACT PACKAGE 2 (NAGREG - GEBANG) WEST JAVA PROVINCE	1:50, 1:500	DETAIL OF GIRDER P6 (1 OF 3)	GST-58
	Sign	Sign	Sign	APPROVED BY: Ir. HERRY VAZA M,Eng.Sc NIP. : 110038400		FULL SIZE A3		SHEET NO : 58 / 76
	Date	Date	Date	Sign / Date				

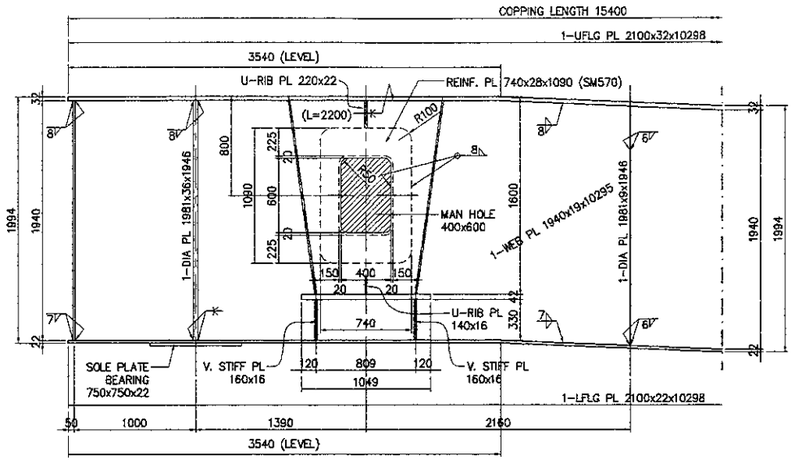

SECTION 2-2
SCALE : 1:50

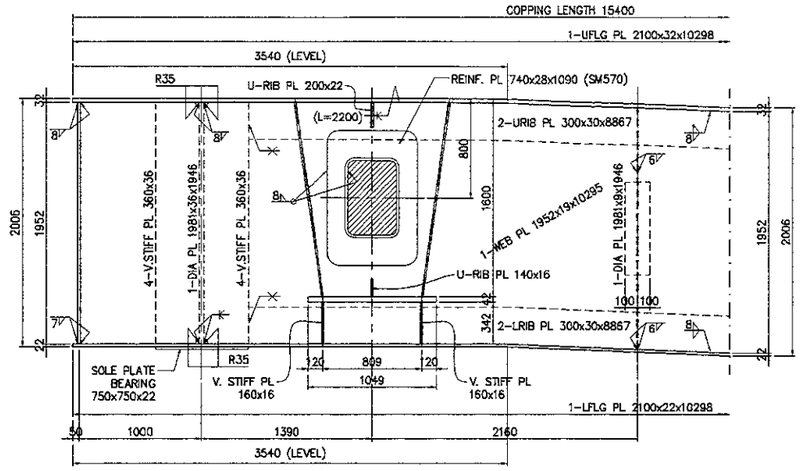

SECTION 1-1
SCALE : 1:50

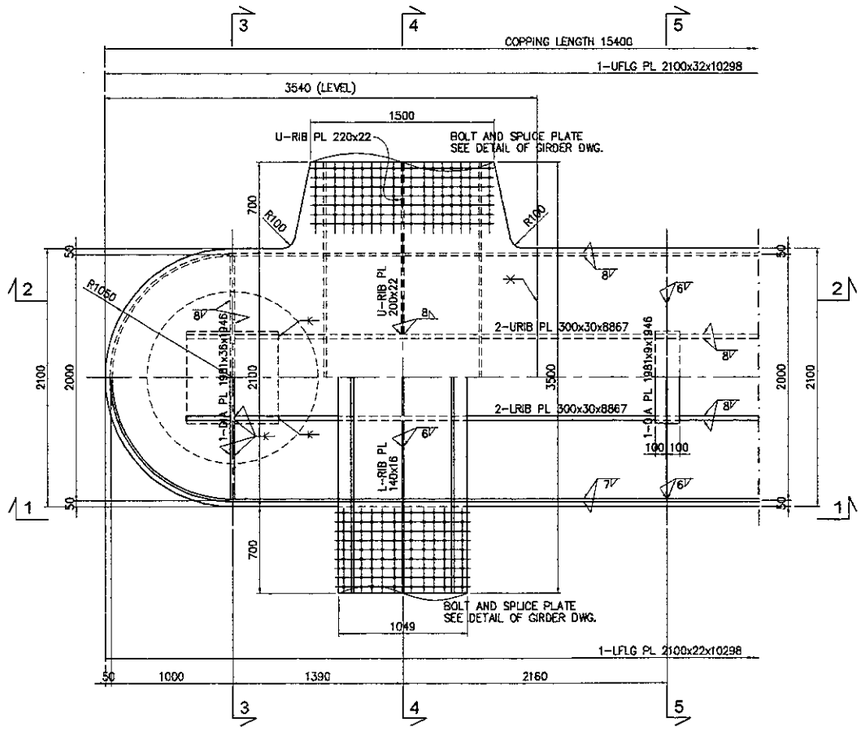

P L A N
SCALE : 1:50

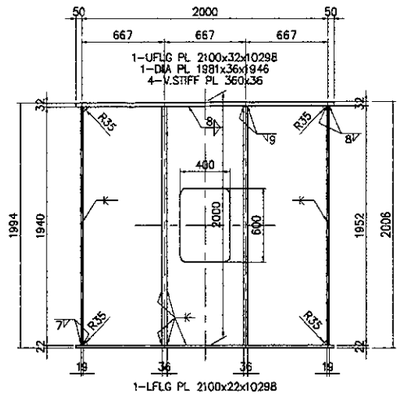

SECTION 3-3
SCALE : 1:50

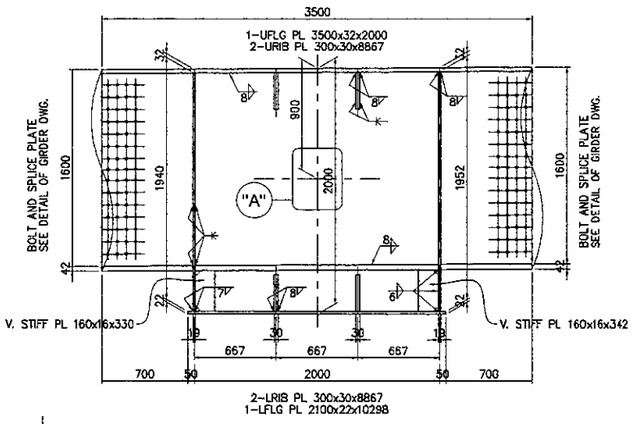

SECTION 4-4
SCALE : 1:50

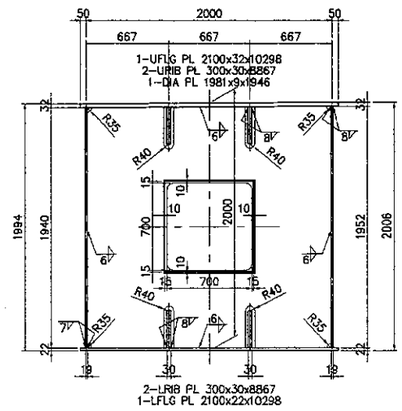

SECTION 5-5
SCALE : 1:50

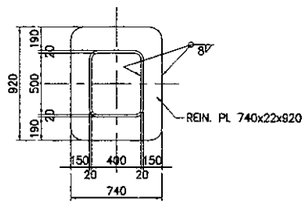

DETAIL "A"
SCALE : 1:50

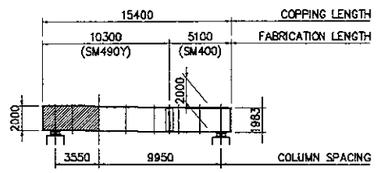

KEY PLAN
SCALE : 1:500

JAPAN INTERNATIONAL COOPERATION AGENCY / KATAHIRA & ENGINEERS INTERNATIONAL	DESIGNED BY	CHECKED BY	SUBMITTED BY	REPUBLIC OF INDONESIA MINISTRY OF PUBLIC WORKS DIRECTORATE GENERAL OF HIGHWAYS	PROJECT AND LOCATION :	SCALE :	DRAWING TITLE :	DRAWING NO :
	Name: S. MATSUI	Name: T. OKUMURA	Name: M. KIUCHI		DETAILED DESIGN STUDY OF NORTH JAVA CORRIDOR FLYOVER PROJECT GEBANG FLYOVER - CONTRACT PACKAGE 2 (NAGREG - GEBANG) WEST JAVA PROVINCE	1:40, 1:50 1:500	DETAIL OF GIRDER P6 (2 OF 3)	GST-59
	Sign	Sign	Sign	APPROVED BY: Ir. HERRY VAZA M,Eng.Sc NIP. : 110038400		FULL SIZE A3		SHEET NO : 59 / 76
	Date	Date	Date	Sign / Date				

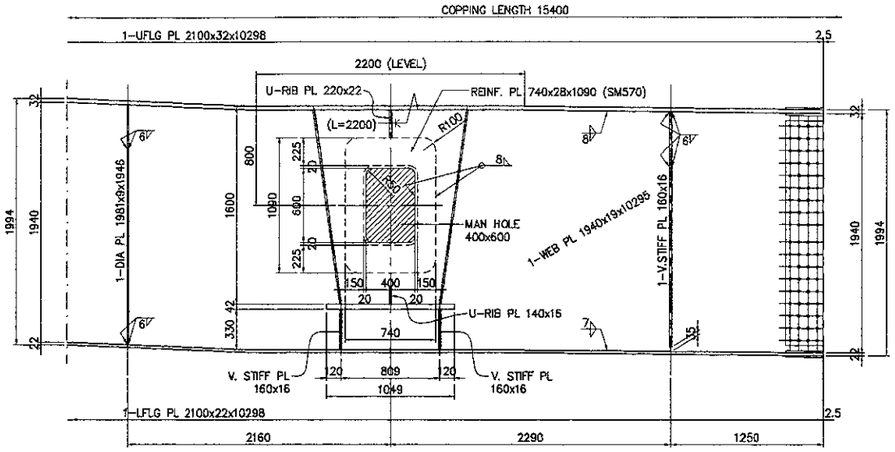

SECTION 2-2
SCALE : 1:50

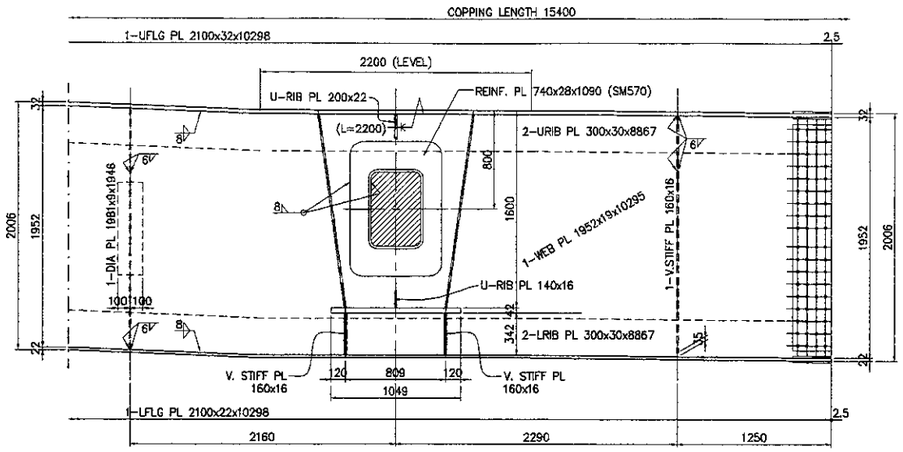

SECTION 1-1
SCALE : 1:50

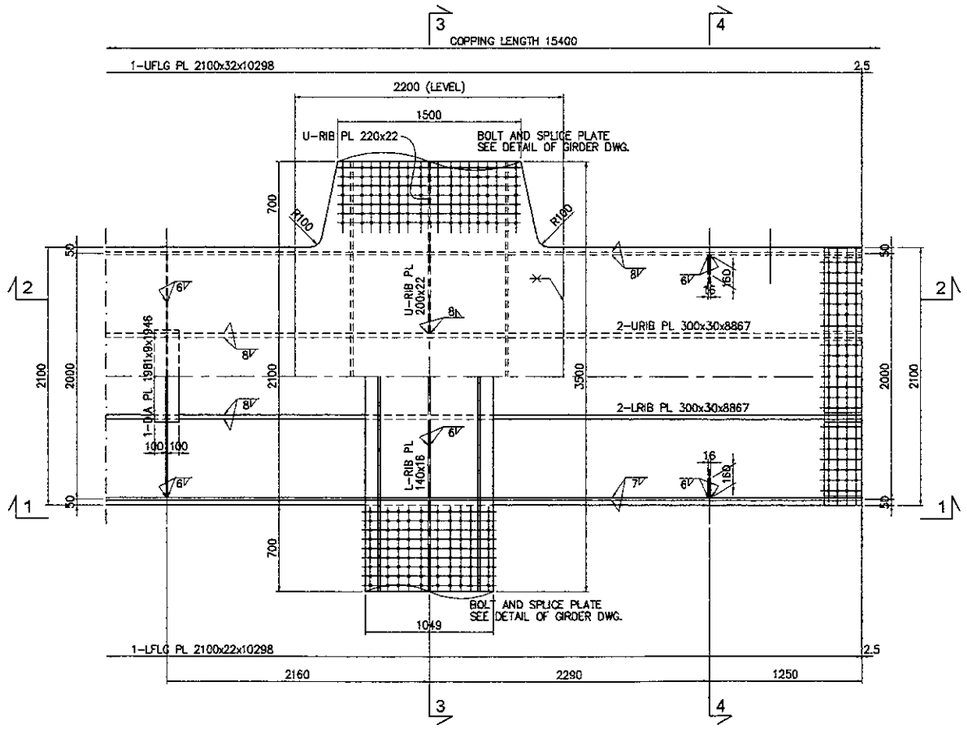

P L A N
SCALE : 1:50

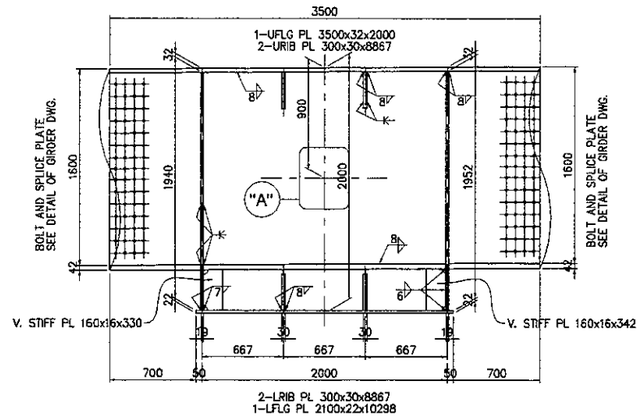

SECTION 3-3
SCALE : 1:50

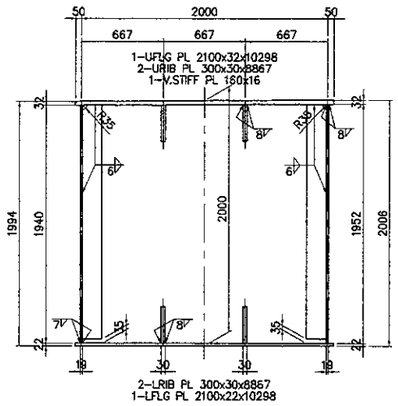

SECTION 4-4
SCALE : 1:50

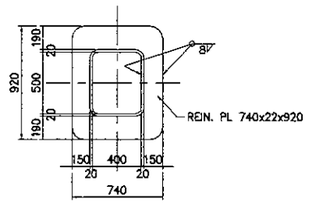

DETAIL "A"
SCALE : 1:50

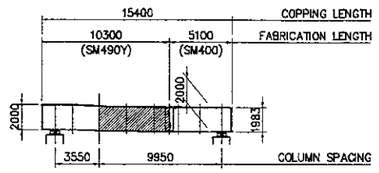

KEY PLAN
SCALE : 1:500

JAPAN INTERNATIONAL COOPERATION AGENCY / KATAHIRA & ENGINEERS INTERNATIONAL	DESIGNED BY	CHECKED BY	SUBMITTED BY	REPUBLIC OF INDONESIA MINISTRY OF PUBLIC WORKS DIRECTORATE GENERAL OF HIGHWAYS	PROJECT AND LOCATION :	SCALE :	DRAWING TITLE :	DRAWING NO :
	Name S. MATSUI	Name T. OKUMURA	Name M. KIUCHI	APPROVED BY Ir. HERRY VAZA M,Eng.Sc NIP. : 110038400	DETAILED DESIGN STUDY OF NORTH JAVA CORRIDOR FLYOVER PROJECT GEBANG FLYOVER - CONTRACT PACKAGE 2 (NAGREG - GEBANG) WEST JAVA PROVINCE	1:50, 1:500	DETAIL OF GIRDER P6 (3 OF 3)	GST-60
	Sign	Sign	Sign	Sign		FULL SIZE A3		SHEET NO : 60 / 76
	Date	Date	Date	Date				

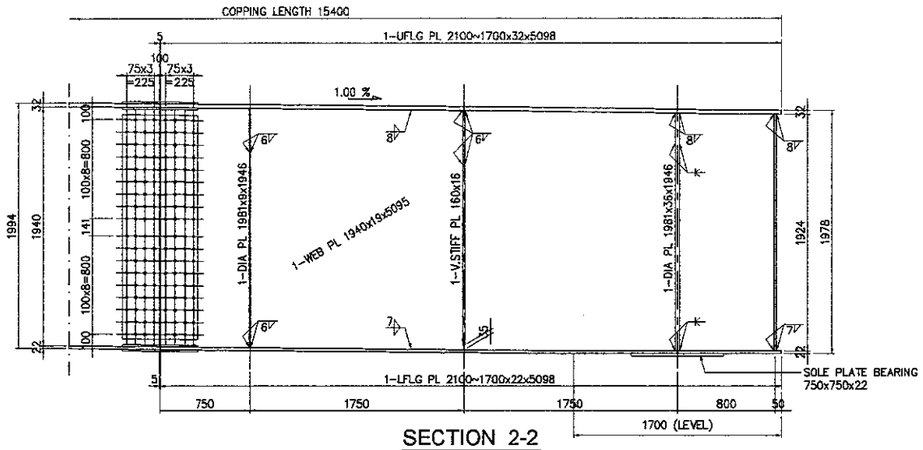

SECTION 2-2
SCALE : 1:50

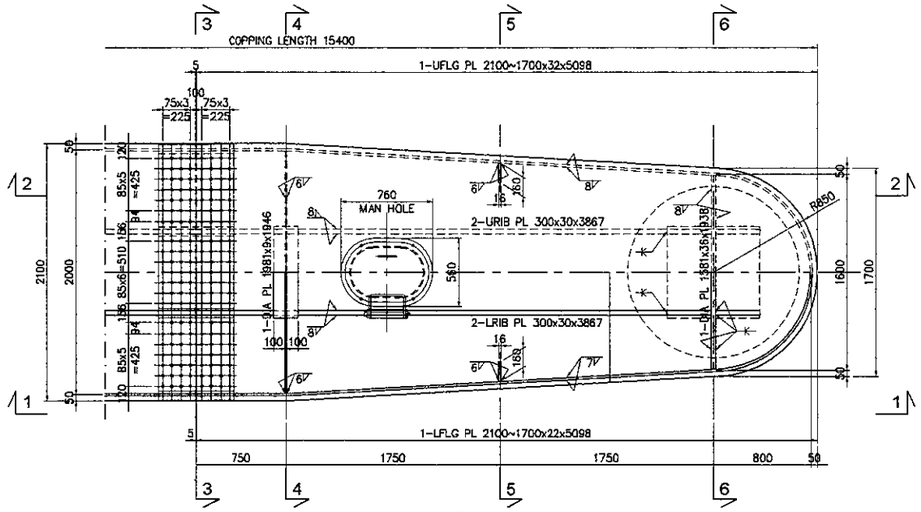

P L A N
SCALE : 1:50

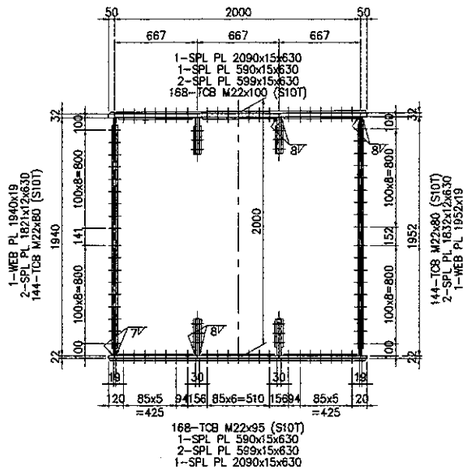

SECTION 3-3
SCALE : 1:50

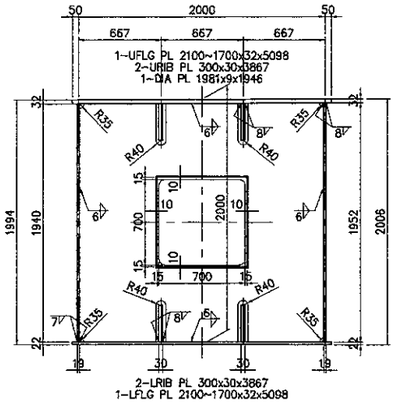

SECTION 4-4
SCALE : 1:50

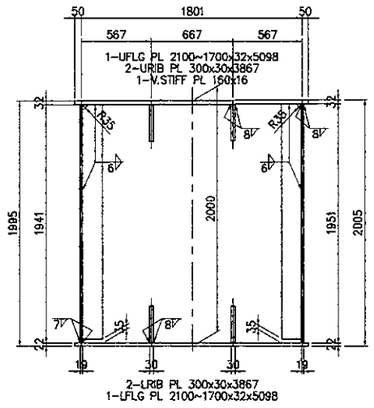

SECTION 5-5
SCALE : 1:50

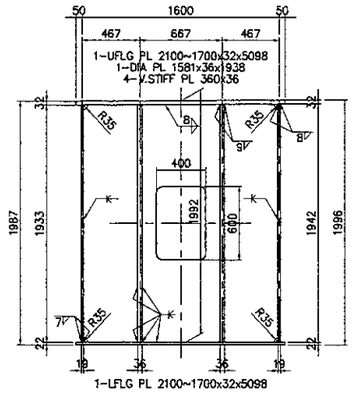

SECTION 6-6
SCALE : 1:50

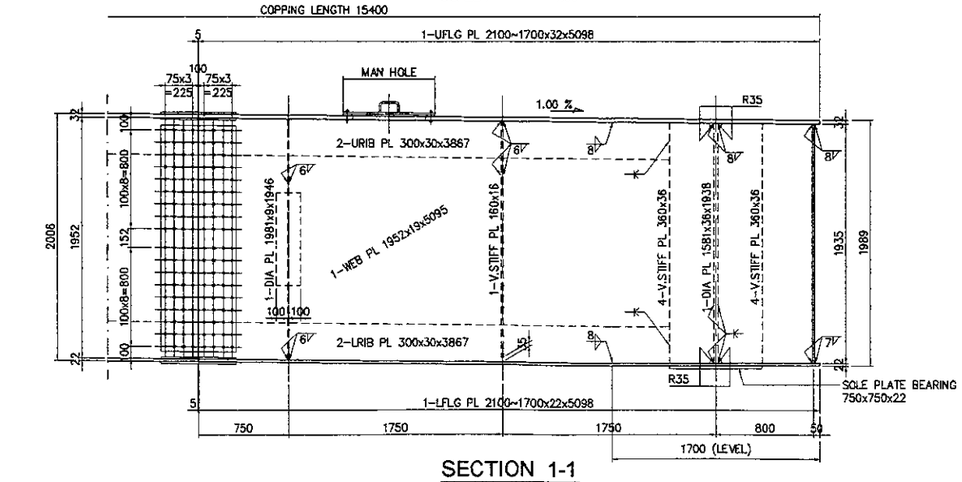

SECTION 1-1
SCALE : 1:50

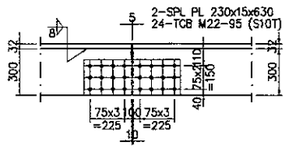

URIB PL FLANGE

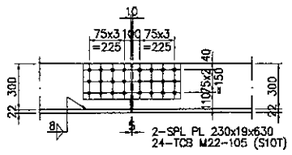

LRIB PL FLANGE

DETAIL OF SPLICE AT RIB PLATE
SCALE : 1:40

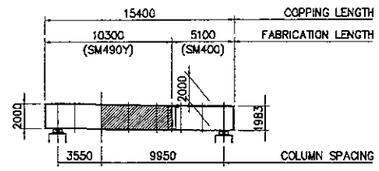

KEY PLAN
SCALE : 1:500

JAPAN INTERNATIONAL COOPERATION AGENCY / KATAHIRA & ENGINEERS INTERNATIONAL	DESIGNED BY	CHECKED BY	SUBMITTED BY	REPUBLIC OF INDONESIA MINISTRY OF PUBLIC WORKS DIRECTORATE GENERAL OF HIGHWAYS	PROJECT AND LOCATION :	SCALE :	DRAWING TITLE :	DRAWING NO :
	Name: S. MATSUI	Name: T.OKUMURA	Name: M. KIUCHI	APPROVED BY: Ir. HERRY VAZA M,Eng.Sc NIP. : 110038400	DETAILED DESIGN STUDY OF NORTH JAVA CORRIDOR FLYOVER PROJECT GEBANG FLYOVER - CONTRACT PACKAGE 2 (NAGREG - GEBANG) WEST JAVA PROVINCE	1 : 40 / 1 : 1000	DETAIL OF GIRDER P8/P11 (1 OF 2)	GST-061
	Sign	Sign	Sign	Sign		FULL SIZE A3		SHEET NO : 61 / 76
	Date	Date	Date	Date				

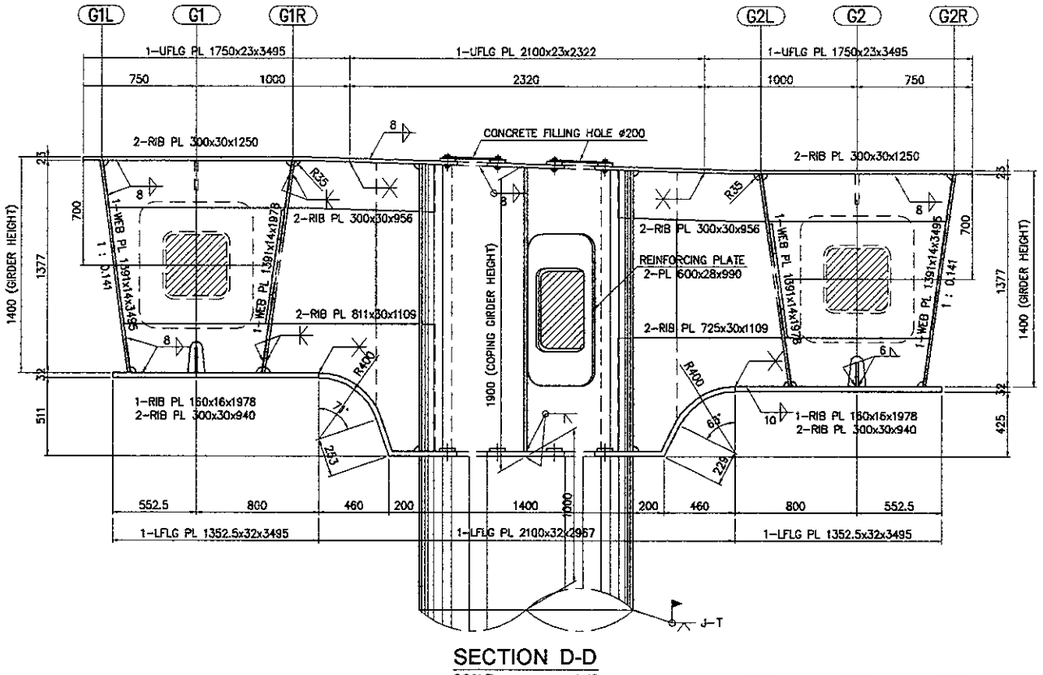

SECTION D-D
SCALE : 1:40

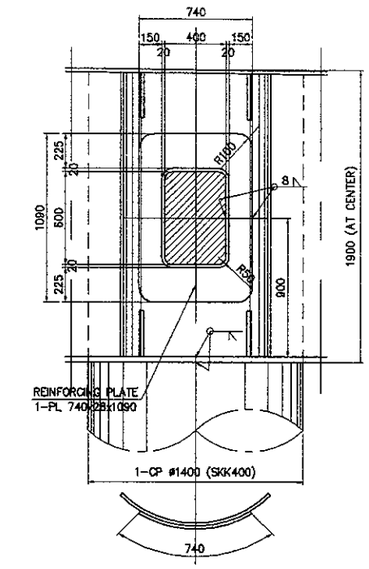

SECTION A-A
SCALE : 1:40

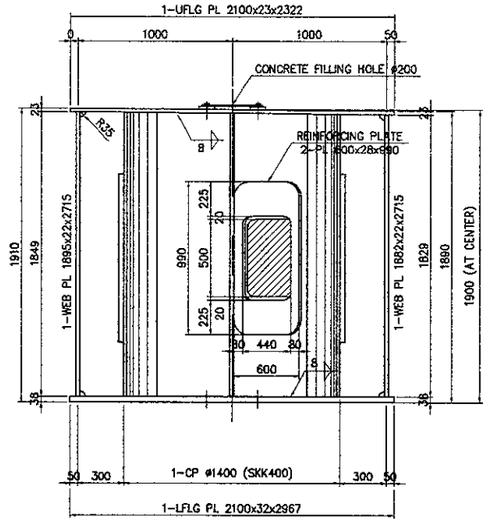

SECTION B-B
SCALE : 1:40

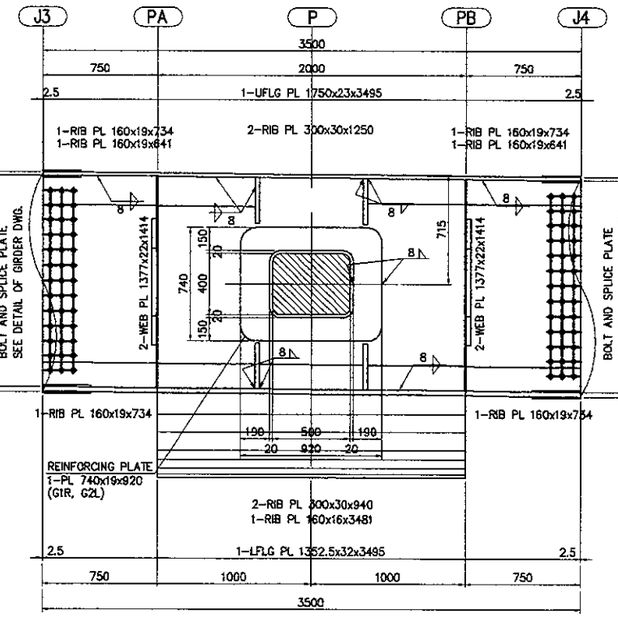

SECTION G1 (G2)
SCALE : 1:40

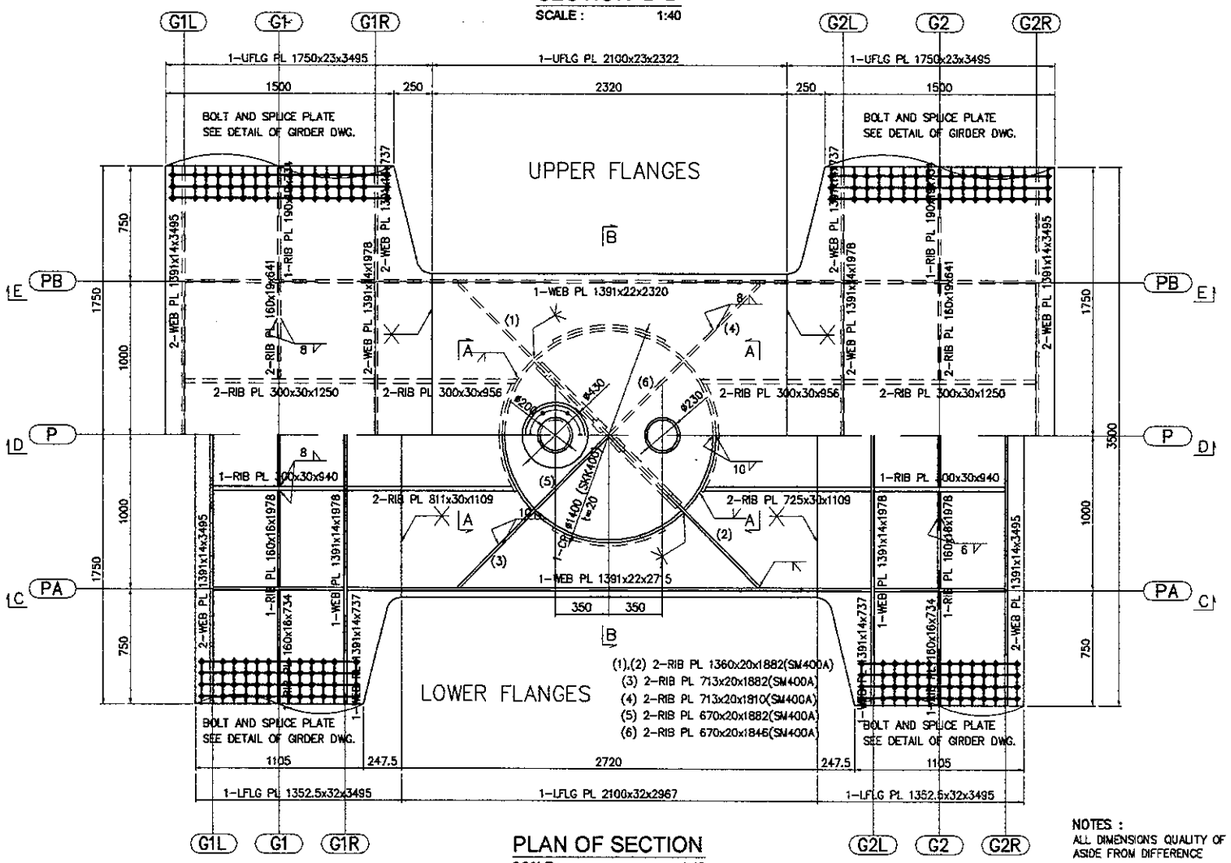

PLAN OF SECTION
SCALE : 1:40

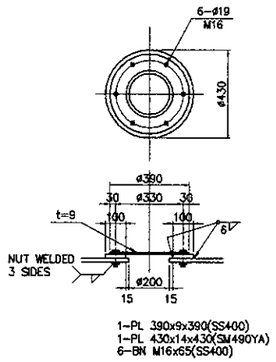

CONCRETE FILLING HOLE OF COLUMN
SCALE : 1:30

NOTES :
ALL DIMENSIONS QUALITY OF STEEL REQUIRE OF SM490Y ASIDE FROM DIFFERENCE

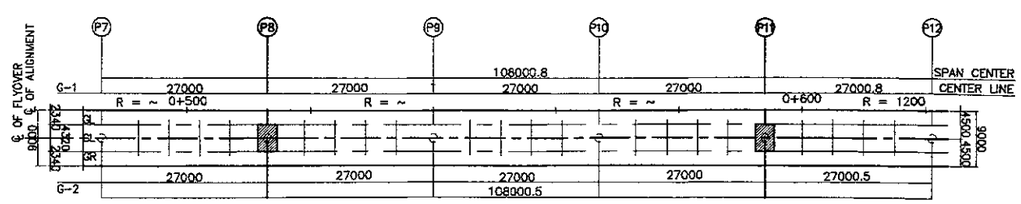

KEY PLAN
SCALE : 1:1000

JAPAN INTERNATIONAL COOPERATION AGENCY / KATAHIRA & ENGINEERS INTERNATIONAL	DESIGNED BY	CHECKED BY	SUBMITTED BY	REPUBLIC OF INDONESIA MINISTRY OF PUBLIC WORKS DIRECTORATE GENERAL OF HIGHWAYS	PROJECT AND LOCATION :	SCALE :	DRAWING TITLE :	DRAWING NO :
	Name: S. MATSUI	Name: T.OKUMURA	Name: M. KIUCHI		DETAILED DESIGN STUDY OF NORTH JAVA CORRIDOR FLYOVER PROJECT GEBANG FLYOVER - CONTRACT PACKAGE 2 (NAGREG - GEBANG) WEST JAVA PROVINCE	1 : 40	DETAIL OF GIRDER P8/P11 (2 OF 2)	GST-062
	Sign	Sign	Sign	APPROVED BY: Ir. HERRY VAZA M,Eng.Sc NIP. : 110038400		FULL SIZE A3		SHEET NO : 62 / 76
	Date	Date	Date	Sign / Date				

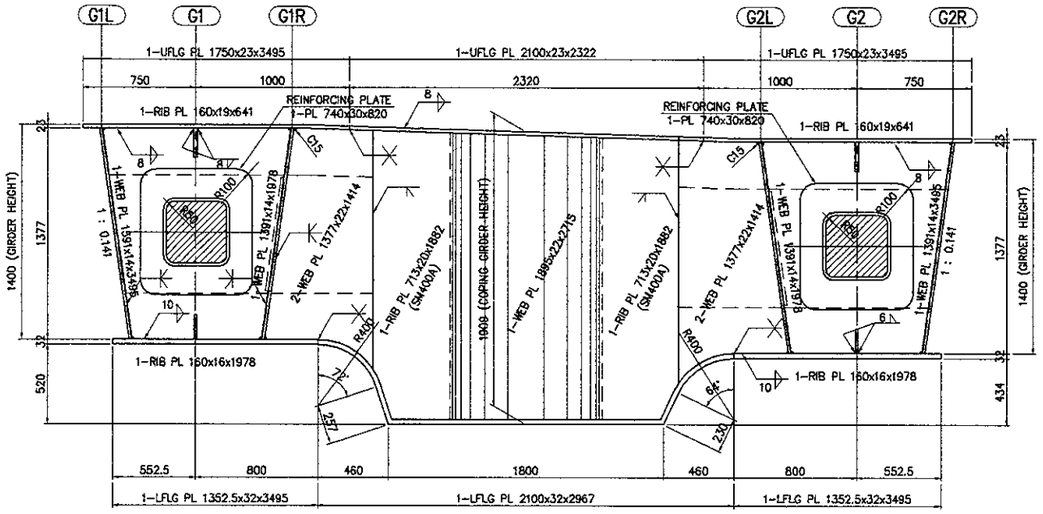

SECTION C-C
SCALE : 1:40

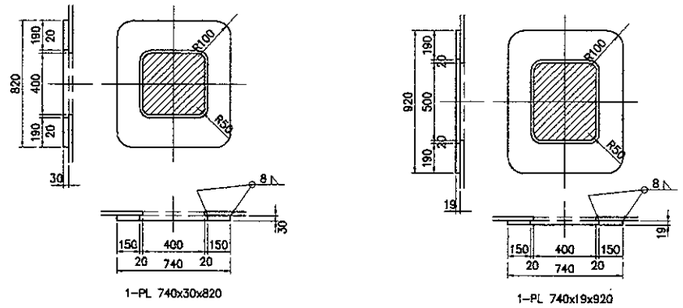

MAN HOLE OF GIRDER
SCALE : 1:40

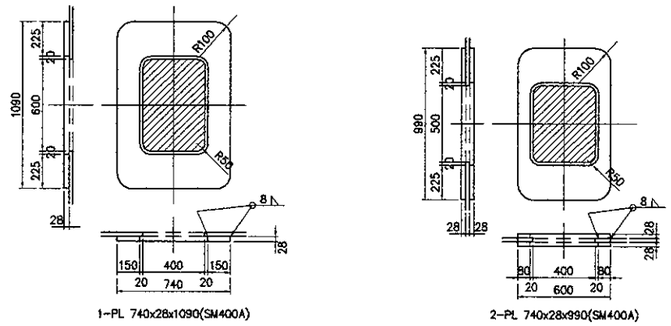

MAN HOLE OF PIER
SCALE : 1:40

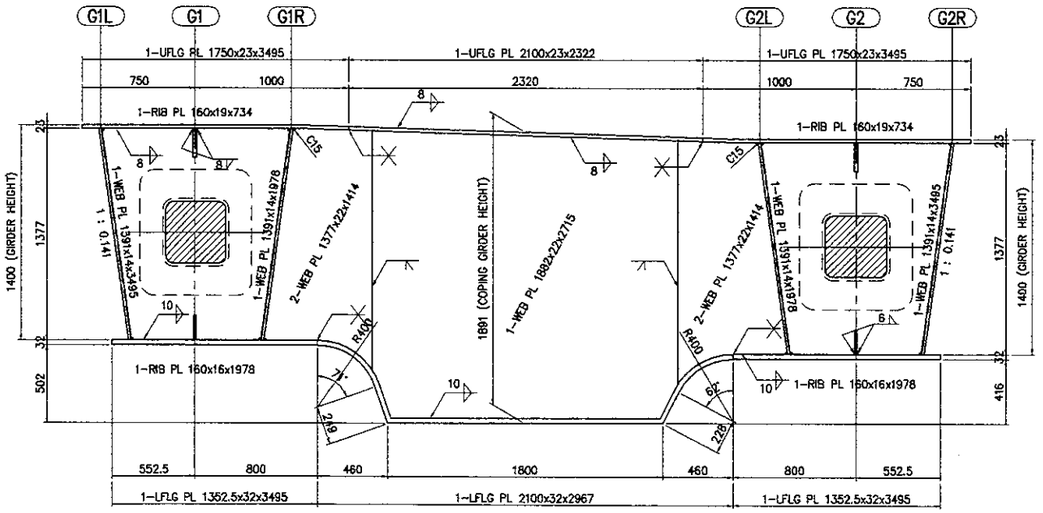

SECTION E-E
SCALE : 1:40

COORDINATES AND ELEVATIONS

		P8B	P8	P8A
G1L	X	248816.2995	248817.2597	248818.2199
	Y	9245790.7750	9245790.4956	9245790.2162
	Z	12.1607	12.1516	12.1425
G1	X	248816.1235	248817.0837	248818.0439
	Y	9245790.1701	9245789.8907	9245789.6113
	Z	12.1607	12.1516	12.1425
G1R	X	248815.9475	248816.9076	248817.8678
	Y	9245789.5652	9245789.2858	9245789.0064
	Z	12.1607	12.1516	12.1425
LCL	X	248815.5200	248816.4801	248817.4403
	Y	9245788.0962	9245787.8167	9245787.5373
	Z	12.1175	12.1084	12.0993
G2L	X	248815.0925	248816.0526	248817.0128
	Y	9245786.6271	9245786.3477	9245786.0683
	Z	12.0743	12.0652	12.0561
G2	X	248814.9164	248815.8766	248816.8368
	Y	9245786.0222	9245785.7428	9245785.4634
	Z	12.0743	12.0652	12.0561
G2R	X	248814.7404	248815.7006	248816.6607
	Y	9245785.4173	9245785.1379	9245784.8585
	Z	12.0743	12.0652	12.0561

		P11B	P11	P11A
G1L	X	248894.0732	248895.0334	248895.9936
	Y	9245768.1421	9245767.8626	9245767.5832
	Z	11.4237	11.4147	11.4056
G1	X	248893.8972	248894.8574	248895.8175
	Y	9245767.5372	9245767.2577	9245766.9783
	Z	11.4237	11.4147	11.4056
G1R	X	248893.7212	248894.6813	248895.6415
	Y	9245766.9322	9245766.6528	9245766.3734
	Z	11.4237	11.4147	11.4056
LCL	X	248893.2937	248894.2538	248895.2140
	Y	9245765.4632	9245765.1838	9245764.9043
	Z	11.3805	11.3715	11.3624
G2L	X	248892.8662	248893.8263	248894.7865
	Y	9245763.9941	9245763.7147	9245763.4353
	Z	11.3373	11.3283	11.3192
G2	X	248892.6901	248893.6503	248894.6105
	Y	9245763.3892	9245763.1098	9245762.8304
	Z	11.3373	11.3283	11.3192
G2R	X	248892.5141	248893.4743	248894.4344
	Y	9245762.7843	9245762.5049	9245762.2255
	Z	11.3373	11.3283	11.3192

NOTES :
ALL DIMENSIONS QUALITY OF STEEL REQUIRE OF SM490Y
ASIDE FROM DIFFERENCE

JAPAN INTERNATIONAL COOPERATION AGENCY / KATAHIRA & ENGINEERS INTERNATIONAL	DESIGNED BY	CHECKED BY	SUBMITTED BY	REPUBLIC OF INDONESIA MINISTRY OF PUBLIC WORKS DIRECTORATE GENERAL OF HIGHWAYS	PROJECT AND LOCATION :	SCALE :	DRAWING TITLE :	DRAWING NO :
	Name: S. MATSUI	Name: T.OKUMURA	Name: M. KIUCHI		DETAILED DESIGN STUDY OF NORTH JAVA CORRIDOR FLYOVER PROJECT GEBANG FLYOVER - CONTRACT PACKAGE 2 (NAGREG - GEBANG) WEST JAVA PROVINCE	1 : 40 1 : 1000	DETAIL OF GIRDER P9 & P10 (1 OF 2)	GST-063
	Sign	Sign	Sign	APPROVED BY: Ir. HERRY VAZA M,Eng.Sc NIP. : 110038400		FULL SIZE A3		SHEET NO : 63 / 76
	Date	Date	Date	Sign / Date				

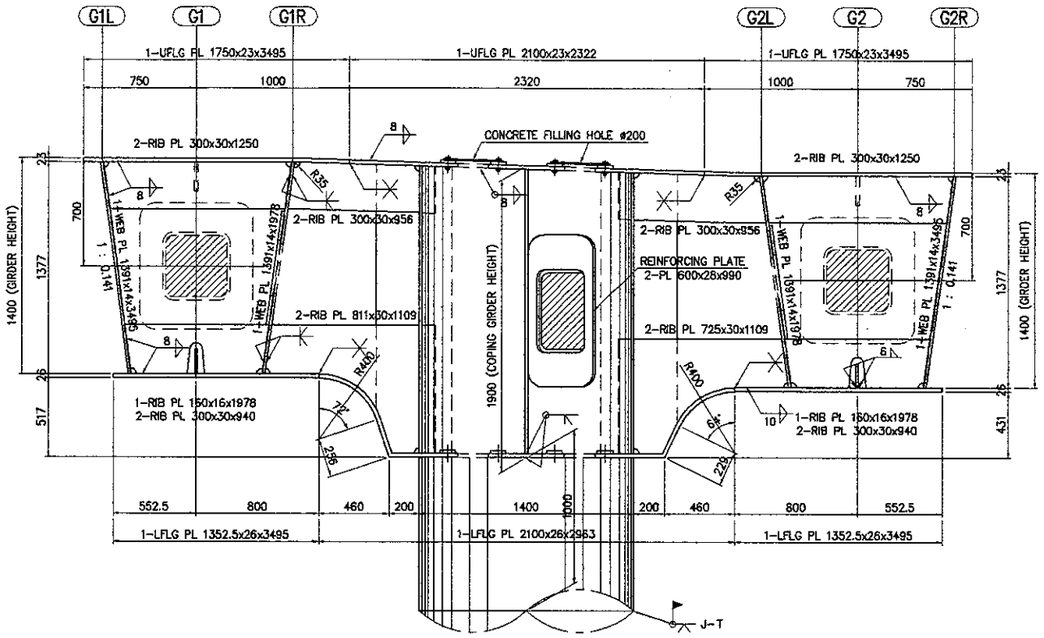

SECTION D-D
SCALE : 1:40

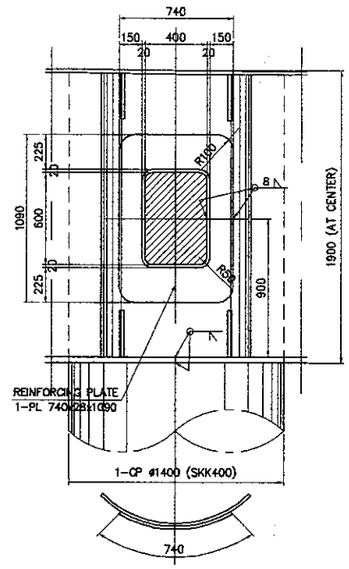

SECTION A-A
SCALE : 1:40

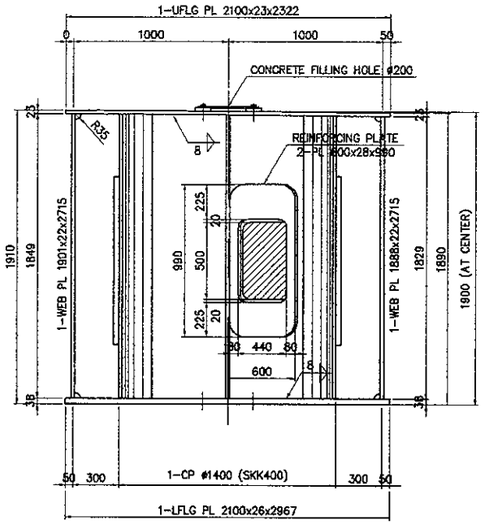

SECTION B-B
SCALE : 1:40

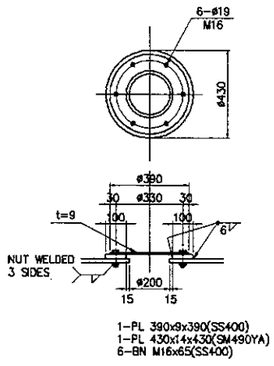

CONCRETE FILLING HOLE OF COLUMN
SCALE : 1:30

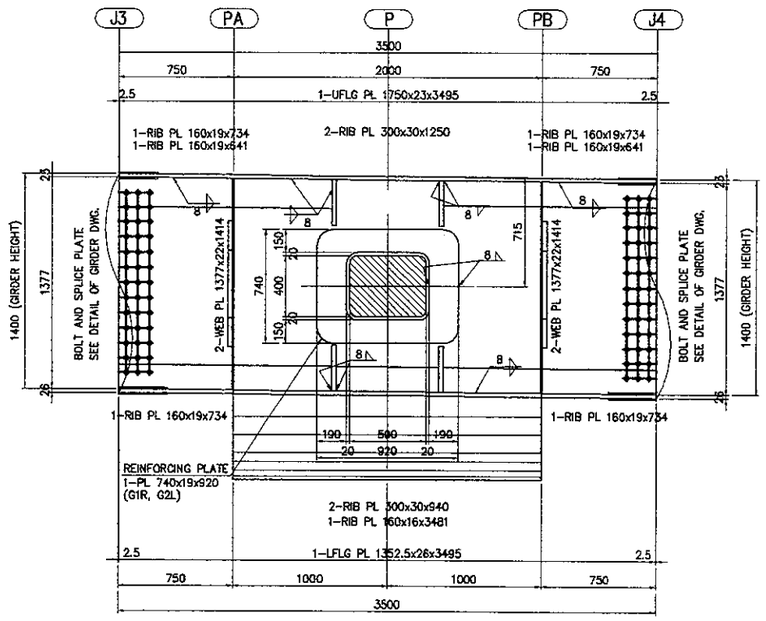

SECTION G1 (G2)
SCALE : 1:40

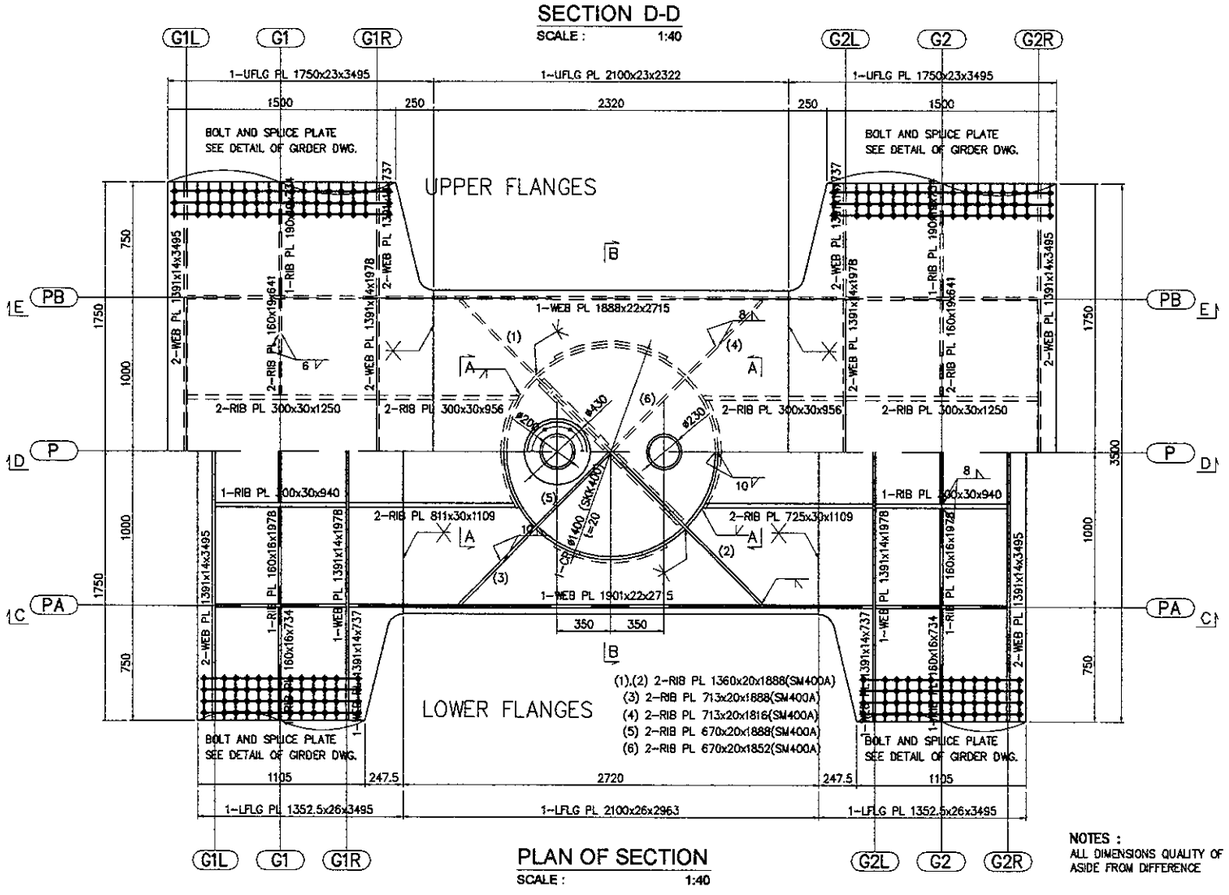

PLAN OF SECTION
SCALE : 1:40

NOTES :
ALL DIMENSIONS QUALITY OF STEEL REQUIRE OF SM490Y
ASIDE FROM DIFFERENCE

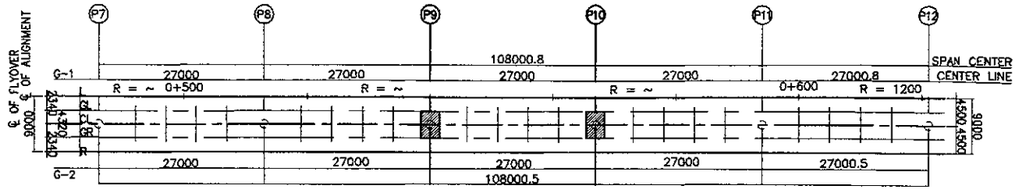

KEY PLAN
SCALE : 1:1000

JAPAN INTERNATIONAL COOPERATION AGENCY / KATAHIRA & ENGINEERS INTERNATIONAL	DESIGNED BY	CHECKED BY	SUBMITTED BY	REPUBLIC OF INDONESIA MINISTRY OF PUBLIC WORKS DIRECTORATE GENERAL OF HIGHWAYS	PROJECT AND LOCATION :	SCALE :	DRAWING TITLE :	DRAWING NO :
	Name: S. MATSUI	Name: T.OKUMURA	Name: M. KIUCHI		DETAILED DESIGN STUDY OF NORTH JAVA CORRIDOR FLYOVER PROJECT GEBANG FLYOVER - CONTRACT PACKAGE 2 (NAGREG - GEBANG) WEST JAVA PROVINCE	1 : 40 1 : 1000	DETAIL OF GIRDER P9 & P10 (2 OF 2)	GST-064
	Sign	Sign	Sign	APPROVED BY: Ir. HERRY VAZA M,Eng.Sc NIP. : 110038400				SHEET NO :
	Date	Date	Date	Sign / Date		FULL SIZE A3		64 / 76

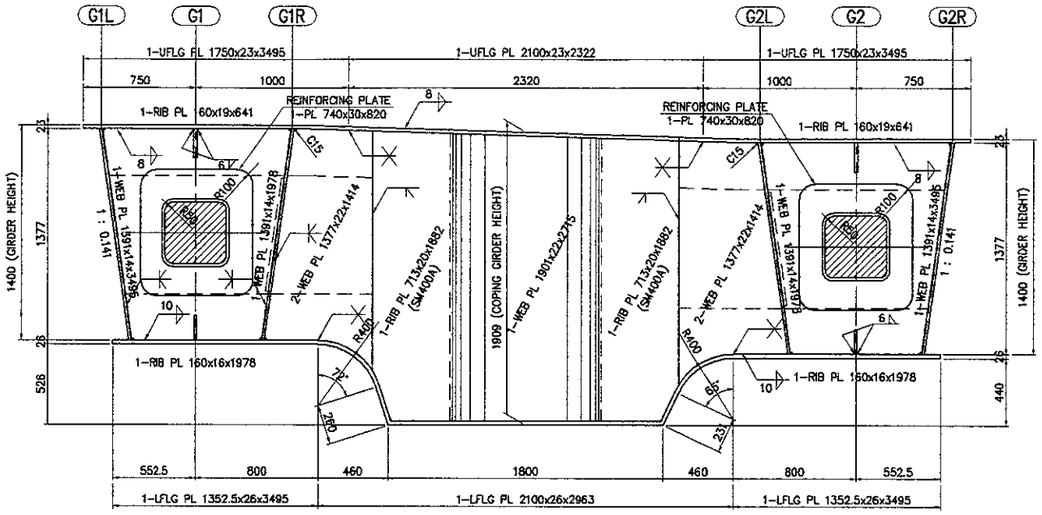

SECTION C-C

SCALE : 1:40

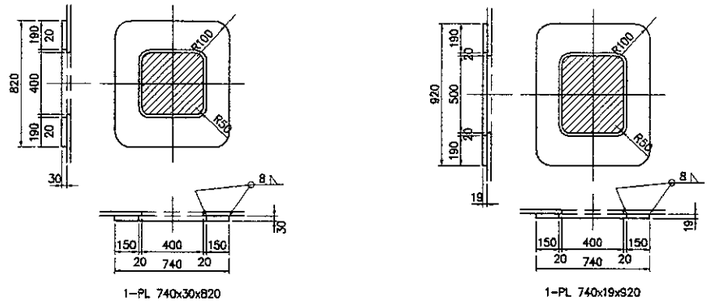

MAN HOLE OF GIRDER

SCALE : 1:40

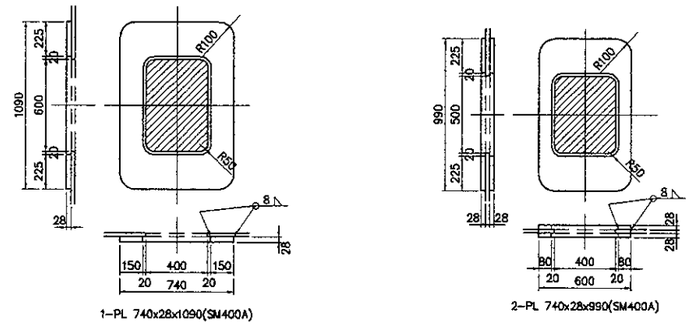

MAN HOLE OF PIER

SCALE : 1:40

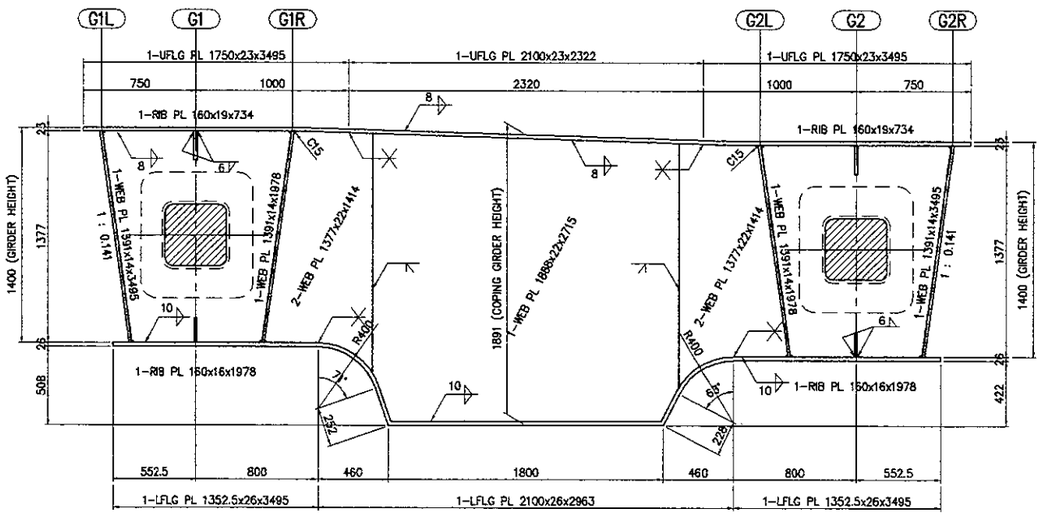

SECTION E-E

SCALE : 1:40

COORDINATES AND ELEVATIONS

		P9B	P9	P9A
G1L	X	248842.2241	248843.1843	248844.1445
	Y	9245783.2307	9245782.9513	9245782.6719
	Z	11.9150	11.9059	11.8968
G1	X	248842.0481	248843.0082	248843.9684
	Y	9245782.6258	9245782.3464	9245782.0670
	Z	11.9150	11.9059	11.8968
G1R	X	248841.8720	248842.8322	248843.7924
	Y	9245782.0209	9245781.7415	9245781.4621
	Z	11.9150	11.9059	11.8968
LCL	X	248841.4445	248842.4047	248843.3649
	Y	9245780.5518	9245780.2724	9245779.9930
	Z	11.8718	11.8627	11.8536
G2L	X	248841.0170	248841.9772	248842.9374
	Y	9245779.0828	9245778.8034	9245778.5239
	Z	11.8286	11.8195	11.8104
G2	X	248840.8410	248841.8012	248842.7613
	Y	9245778.4779	9245778.1985	9245777.9190
	Z	11.8286	11.8195	11.8104
G2R	X	248840.6650	248841.6251	248842.5853
	Y	9245777.8730	9245777.5936	9245777.3141
	Z	11.8286	11.8195	11.8104

		P10B	P10	P10A
G1L	X	248868.1487	248869.1088	248870.0690
	Y	9245775.6864	9245775.4070	9245775.1275
	Z	11.6694	11.6603	11.6512
G1	X	248867.9726	248868.9328	248869.8930
	Y	9245775.0815	9245774.8021	9245774.5226
	Z	11.6694	11.6603	11.6512
G1R	X	248867.7966	248868.7568	248869.7169
	Y	9245774.4766	9245774.1972	9245773.9177
	Z	11.6694	11.6603	11.6512
LCL	X	248867.3691	248868.3293	248869.2894
	Y	9245773.0075	9245772.7281	9245772.4487
	Z	11.6262	11.6171	11.6080
G2L	X	248866.9416	248867.9018	248868.8619
	Y	9245771.5385	9245771.2590	9245770.9796
	Z	11.5830	11.5739	11.5648
G2	X	248866.7656	248867.7257	248868.6859
	Y	9245770.9336	9245770.6541	9245770.3747
	Z	11.5830	11.5739	11.5648
G2R	X	248866.5895	248867.5497	248868.5099
	Y	9245770.3286	9245770.0492	9245769.7698
	Z	11.5830	11.5739	11.5648

NOTES :
ALL DIMENSIONS QUALITY OF STEEL REQUIRE OF SM490Y
ASIDE FROM DIFFERENCE

JAPAN INTERNATIONAL COOPERATION AGENCY KATAHIRA & ENGINEERS INTERNATIONAL	DESIGNED BY	CHECKED BY	SUBMITTED BY	REPUBLIC OF INDONESIA MINISTRY OF PUBLIC WORKS DIRECTORATE GENERAL OF HIGHWAYS	PROJECT AND LOCATION :	SCALE :	DRAWING TITLE :	DRAWING NO :
	Name: S. MATSUI	Name: T. OKUMURA	Name: M. KIUCHI		DETAILED DESIGN STUDY OF NORTH JAVA CORRIDOR FLYOVER PROJECT GEBANG FLYOVER - CONTRACT PACKAGE 2 (NAGREG - GEBANG) WEST JAVA PROVINCE	1:10, 1:20 1:400	DETAIL OF GIRDER ACCESSORIES P4 - P7	GST-065
	Sign	Sign	Sign	APPROVED BY: Ir. HERRY VAZA M.Eng.Sc NIP. : 110038400		FULL SIZE A3		SHEET NO : 65 / 76
	Date	Date	Date	Sign / Date				

DETAIL OF VERTICAL WEB STIFFENER

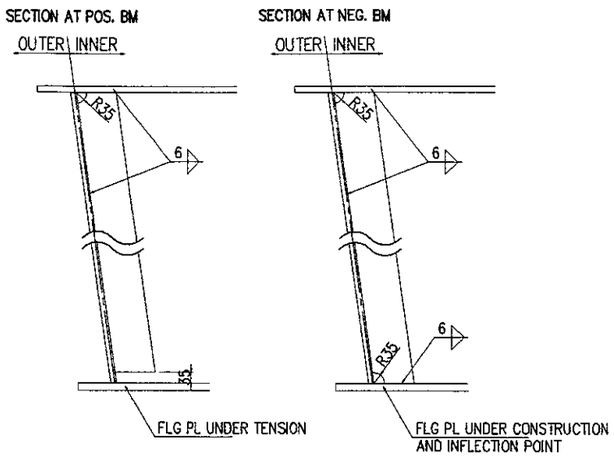

DETAIL OF WEB HOLE FOR DRAIN PIPE

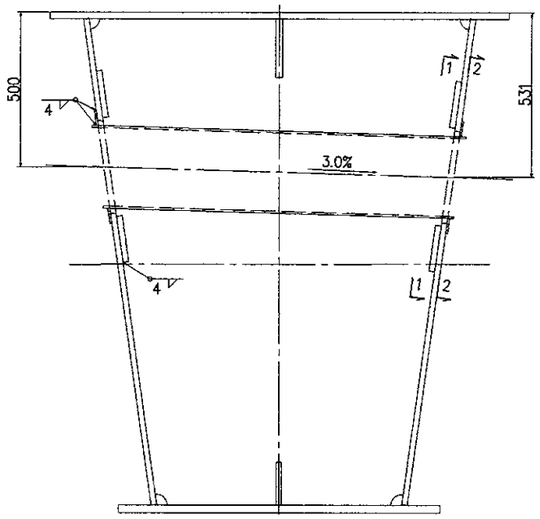

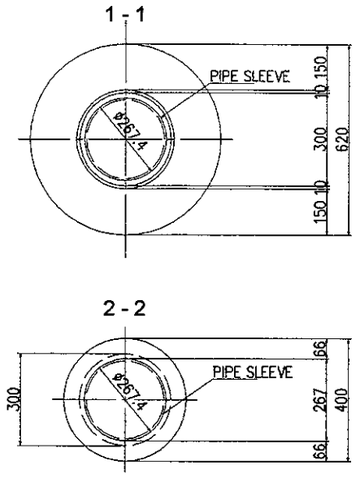

2-PL 620x15x620(SM490YA)
2-PL 400x6x400(SM400A)
1-PIPE ø267.4x6.6x1225(STK400)

DETAIL OF DRAIN PIPE CROSSING

SCALE : 1:20

DETAIL OF MAN HOLE

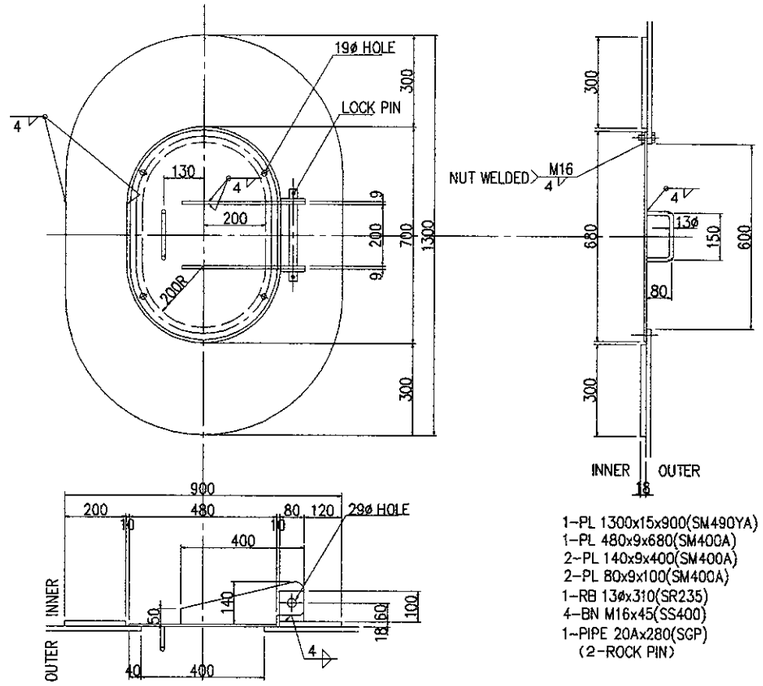

1-PL 1300x15x900(SM490YA)
1-PL 480x9x680(SM400A)
2-PL 140x9x400(SM400A)
2-PL 80x9x100(SM400A)
1-RB 13ø x 310(SR235)
4-BN M16x45(SS400)
1-PIPE 20Ax280(SGP)
(2-ROCK PIN)

DETAIL OF SOLE PLATE

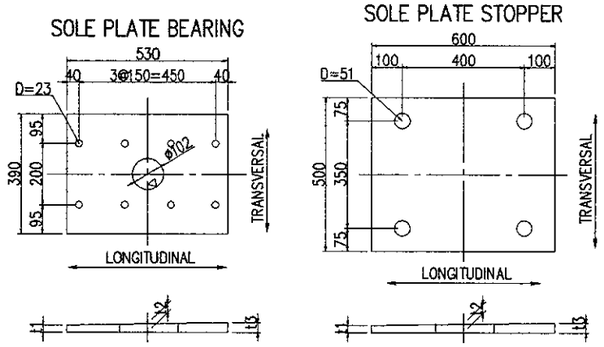

BEARING SOLE PLATE THICKNESS

	S1(P4)		S2(P7)	
	G1	G2	G1	G2
t1	22.7	22.7	27.4	27.4
t2	30	30	25	25
t3	37.3	37.3	22.6	22.6
tw	40	40	30	30

STOPPER SOLE PLATE THICKNESS

	S1(P4)		S2(P7)	
	G1	G2	G1	G2
t1	22.7	22.7	28.7	28.7
t2	31	31	26	26
t3	39.3	39.3	23.3	23.3
tw	42	42	31	31

DIMENSION OF GIRDER

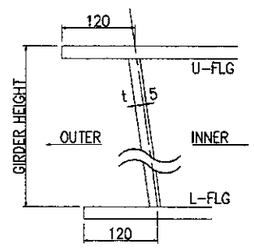

DETAIL OF HANGER

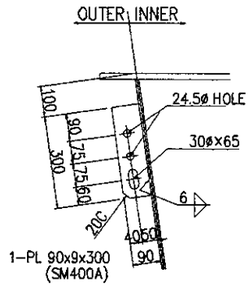

DETAIL OF LOG RIB

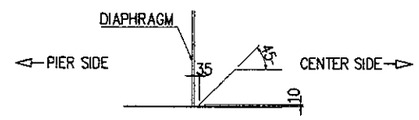

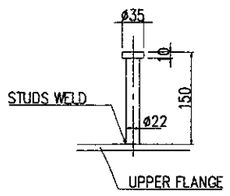

DETAIL OF STUDS (CONNECTION TO U-FLG)

SCALE : 1:10

STUDS SHALL BE WELDED TO UPPER SPLICE PLATE

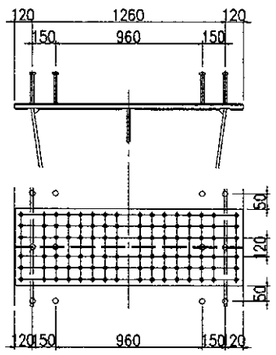

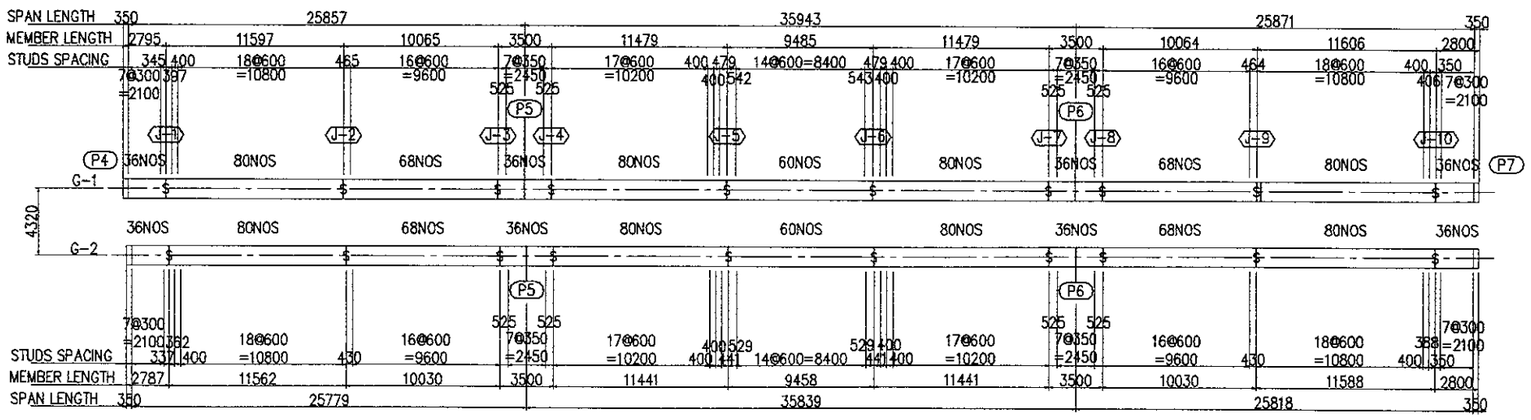

STUDS SPACING

SCALE : 1:400

JICA JAPAN INTERNATIONAL COOPERATION AGENCY / KEI KATAHIRA & ENGINEERS INTERNATIONAL	DESIGNED BY	CHECKED BY	SUBMITTED BY	REPUBLIC OF INDONESIA MINISTRY OF PUBLIC WORKS DIRECTORATE GENERAL OF HIGHWAYS	PROJECT AND LOCATION :	SCALE :	DRAWING TITLE :	DRAWING NO :
	Name: S. MATSUI	Name: T. OKUMURA	Name: M. KIUCHI		DETAILED DESIGN STUDY OF NORTH JAVA CORRIDOR FLYOVER PROJECT GEBANG FLYOVER - CONTRACT PACKAGE 2 (NAGREG - GEBANG) WEST JAVA PROVINCE	1:10, 1:20 1:400	DETAIL OF GIRDER ACCESSORIES P7 - P12	GST-066
	Sign	Sign	Sign	APPROVED BY: Ir. HERRY VAZA M.Eng.Sc NIP. : 110038400		FULL SIZE A3		SHEET NO : 66 / 76
	Date	Date	Date	Sign / Date				

DETAIL OF VERTICAL WEB STIFFENER

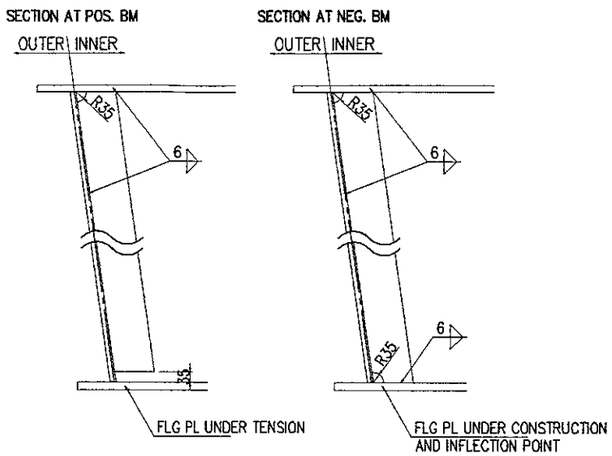

DETAIL OF WEB HOLE FOR DRAIN PIPE

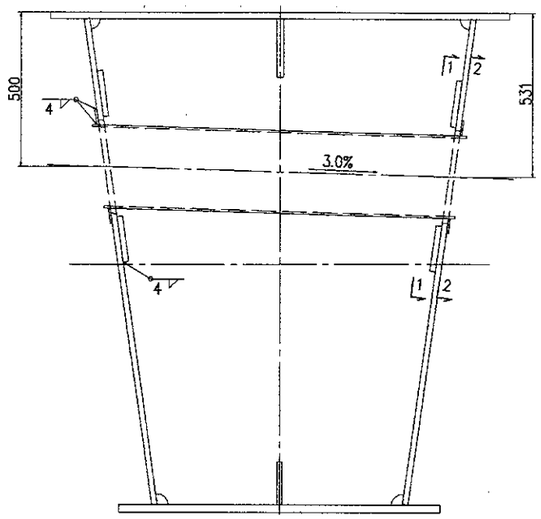

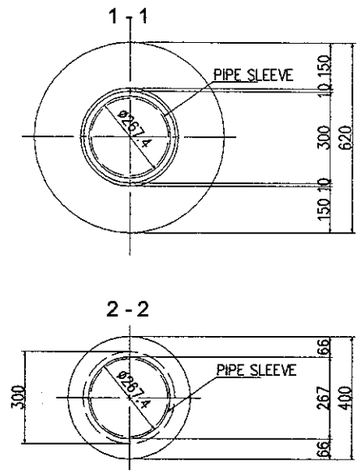

2-PL 620x14x620(SM490YA)
2-PL 400x6x400(SM400A)
1-PIPE ø267.4x6.6x1225(STK400)

DETAIL OF DRAIN PIPE CROSSING

SCALE : 1:20

DETAIL OF MAN HOLE

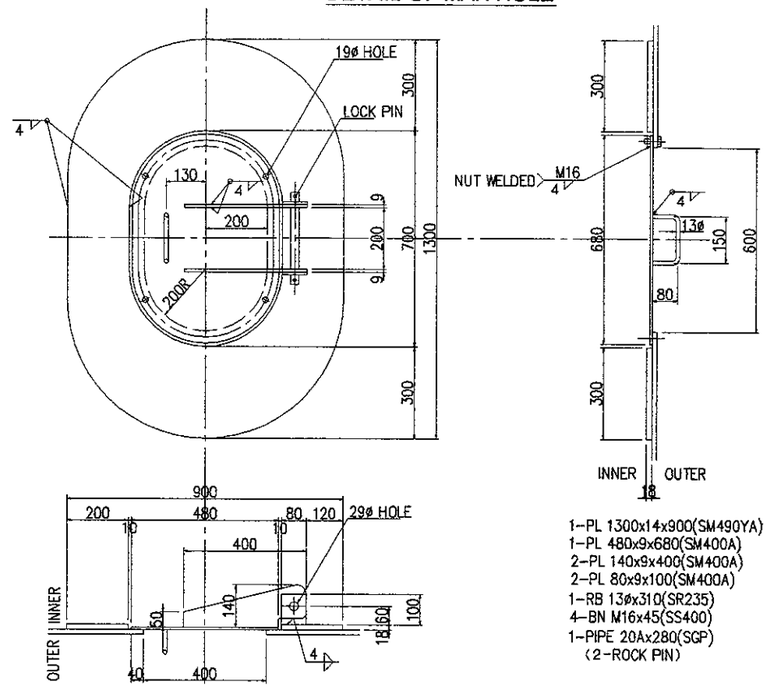

1-PL 1300x14x900(SM490YA)
1-PL 480x9x680(SM400A)
2-PL 140x9x400(SM400A)
2-PL 80x9x100(SM400A)
1-RB 13øx310(SR235)
4-BN M16x45(SS400)
1-PIPE 20Ax280(SGP)
(2-ROCK PIN)

DETAIL OF SOLE PLATE

SOLE PLATE BEARING

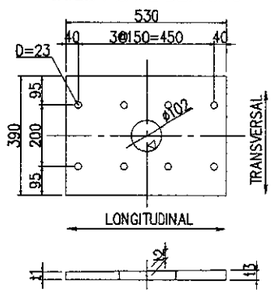

1-SOLE PL 530xtwx390

BEARING SOLE PLATE THICKNESS

	S1(P7)		S2(P12)	
	G1	G2	G1	G2
t1	27.4	27.4	27.4	27.4
t2	25	25	25	25
t3	22.6	22.6	22.6	22.6
tw	30	30	30	30

SOLE PLATE STOPPER

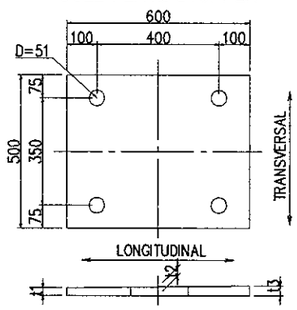

1-SOLE PL 600xtwx500

STOPPER SOLE PLATE THICKNESS

	S1(P7)		S2(P12)	
	G1	G2	G1	G2
t1	28.7	28.7	28.7	28.7
t2	26	26	26	26
t3	23.3	23.3	23.3	23.3
tw	31	31	31	31

STUDS SHALL BE WELDED TO UPPER SPLICE PLATE

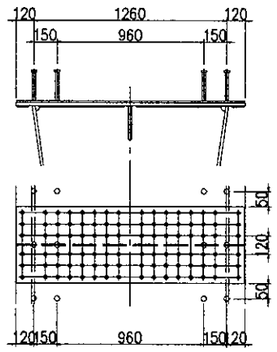

DIMENSION OF GIRDER

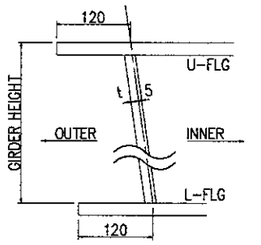

DETAIL OF HANGER

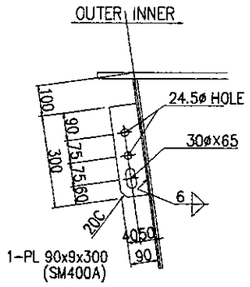

1-PL 90x9x300 (SM400A)

DETAIL OF LOG RIB

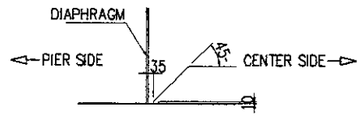

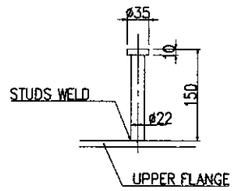

DETAIL OF STUDS (CONNECTION TO U-FLG)

SCALE : 1:10

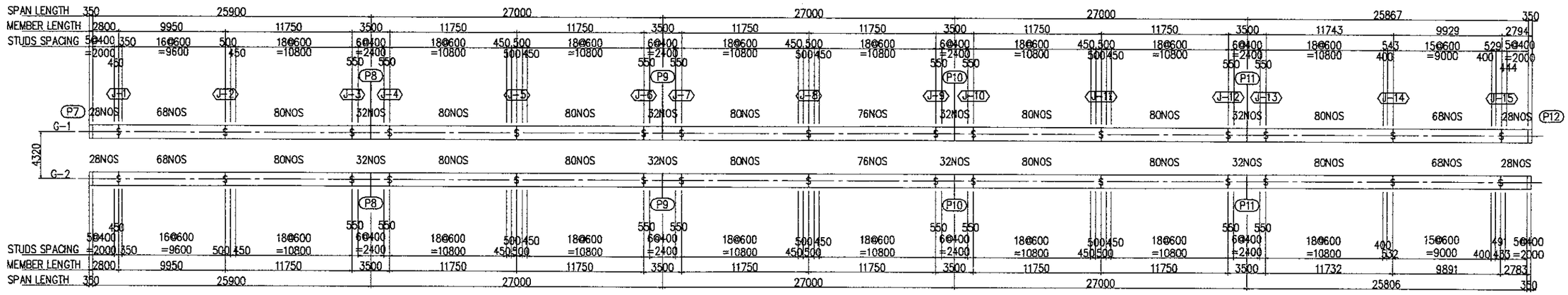

STUDS SPACING

SCALE : 1:400

JAPAN INTERNATIONAL COOPERATION AGENCY KATAHIRA & ENGINEERS INTERNATIONAL	DESIGNED BY	CHECKED BY	SUBMITTED BY	REPUBLIC OF INDONESIA MINISTRY OF PUBLIC WORKS DIRECTORATE GENERAL OF HIGHWAYS	PROJECT AND LOCATION :	SCALE :	DRAWING TITLE :	DRAWING NO :
	Name: S. MATSUI	Name: T. OKUMURA	Name: M. KIUCHI		DETAILED DESIGN STUDY OF NORTH JAVA CORRIDOR FLYOVER PROJECT GEBANG FLYOVER - CONTRACT PACKAGE 2 (NAGREG - GEBANG) WEST JAVA PROVINCE	1 : 000	DECK SLAB ARRANGEMENT PC CABLES P4 - P7	GST-067
	Sign	Sign	Sign	APPROVED BY: Ir. HERRY VAZA M,Eng.Sc NIP. : 110038400 — Sign				SHEET NO :
	Date	Date	Date	Date		FULL SIZE A3		67 / 76

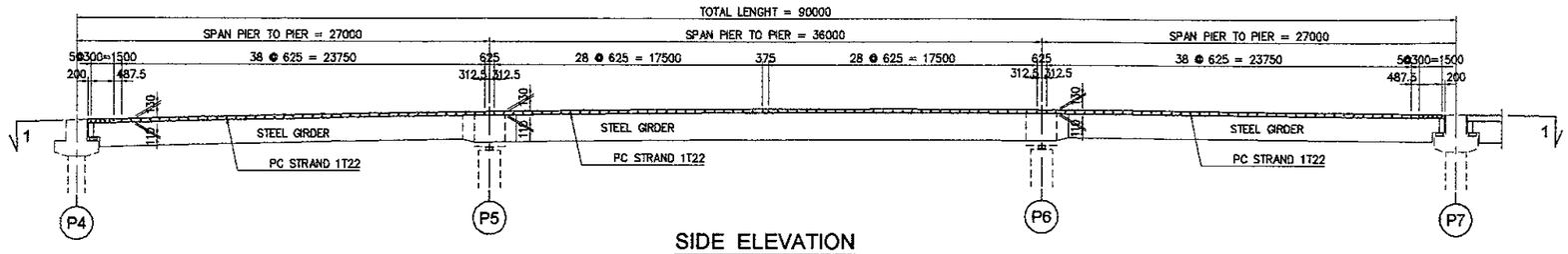

SIDE ELEVATION

SCALE : 1:400

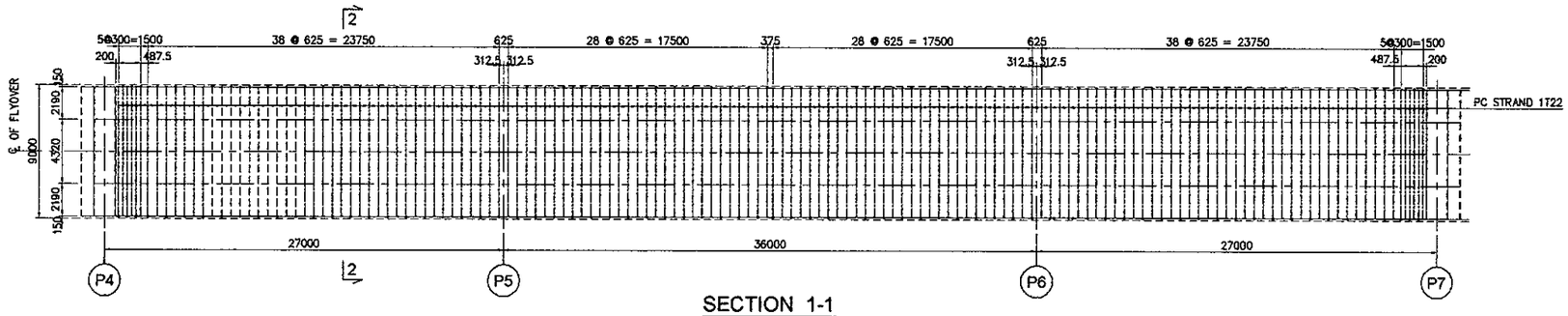

SECTION 1-1

SCALE : 1:400

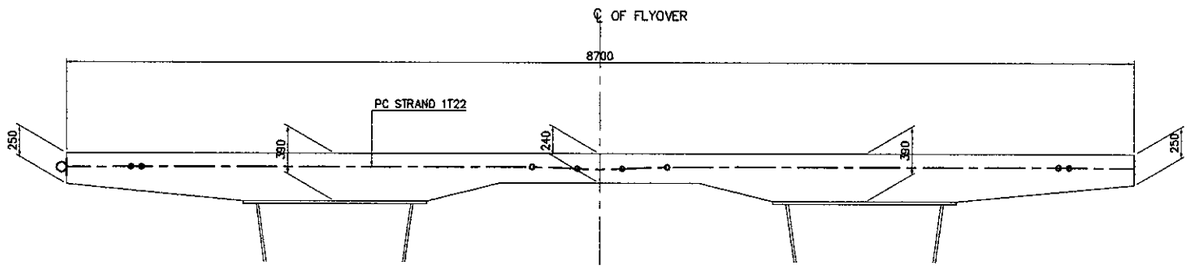

SECTION 2-2

SCALE : 1:50

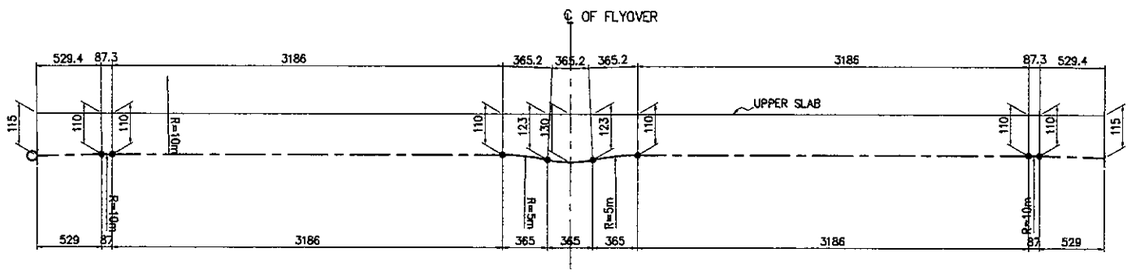

PC CABLE PROFILE

SCALE : 1:50

TABLE OF DECK SLAB PC CABLES 1T22 (Ø21.8 mm)

Length (m)	NOS	Unit Weight (kg / m)	Weight / 1 nos (kg)	Weight (kg)	Remarks
8.700	148	2.482	21.59	3,195.82	STRESSING ANCHORAGE ONE SIDE STAGERED
TOTAL LENGTH (L) = 1,287.60 m TOTAL WEIGHT (W) = 3,195.82 kg					

JAPAN INTERNATIONAL COOPERATION AGENCY KATAHIRA & ENGINEERS INTERNATIONAL	DESIGNED BY	CHECKED BY	SUBMITTED BY	REPUBLIC OF INDONESIA MINISTRY OF PUBLIC WORKS DIRECTORATE GENERAL OF HIGHWAYS	PROJECT AND LOCATION :	SCALE :	DRAWING TITLE :	DRAWING NO :
	Name: S. MATSUI	Name: T. OKUMURA	Name: M. KIUCHI		DETAILED DESIGN STUDY OF NORTH JAVA CORRIDOR FLYOVER PROJECT GEBANG FLYOVER - CONTRACT PACKAGE 2 (NAGREG - GEBANG) WEST JAVA PROVINCE	1 : 000	DECK SLAB ARRANGEMENT PC CABLES P7 - P12	GST-068
	Sign	Sign	Sign	APPROVED BY: Ir. HERRY VAZA M,Eng.Sc NIP. : 110038400 — Sign				SHEET NO :
	Date	Date	Date	Date		FULL SIZE A3		68 / 76

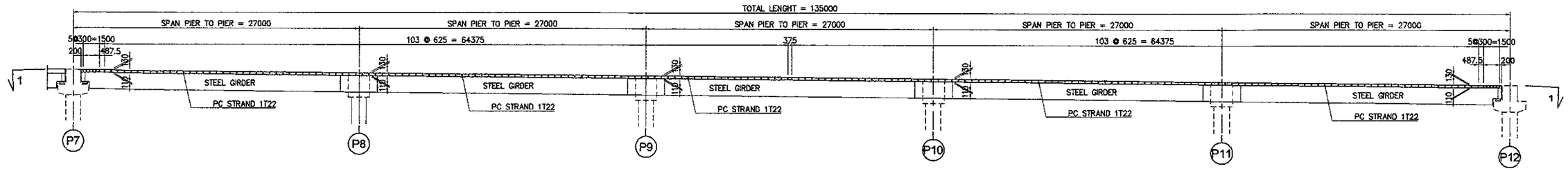

SIDE ELEVATION

SCALE : 1:400

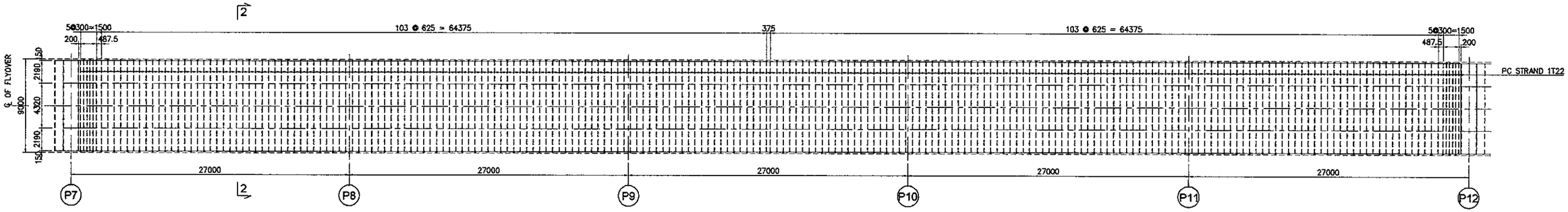

SECTION 1-1

SCALE : 1:400

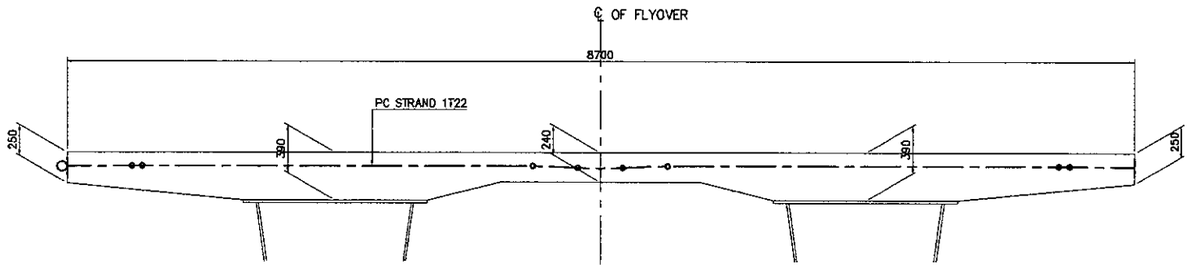

SECTION 2-2

SCALE : 1:50

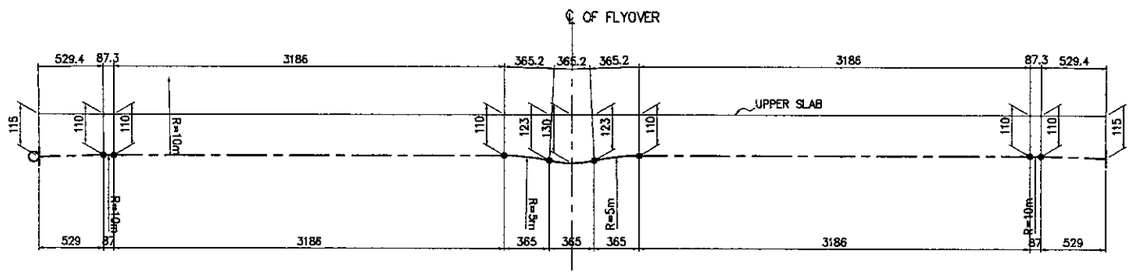

PC CABLE PROFILE

SCALE : 1:50

TABLE OF DECK SLAB PC CABLE 1T22 (Ø21.8 mm)

Length (m)	NOS	Unit Weight (kg / m)	Weight / 1 nos (kg)	Weight (kg)	Remarks
8.700	218	2.482	21.59	4,707.36	STRESSING ANCHORAGE ONE SIDE STAGERED
TOTAL LENGTH (L) = 1,896.60 m TOTAL WEIGHT (W) = 4,707.36 kg					

JAPAN INTERNATIONAL COOPERATION AGENCY KATAHIRA & ENGINEERS INTERNATIONAL	DESIGNED BY	CHECKED BY	SUBMITTED BY	REPUBLIC OF INDONESIA MINISTRY OF PUBLIC WORKS DIRECTORATE GENERAL OF HIGHWAYS	PROJECT AND LOCATION :	SCALE :	DRAWING TITLE :	DRAWING NO :
	Name: S. MATSUI	Name: T. OKUMURA	Name: M. KIUCHI		DETAILED DESIGN STUDY OF NORTH JAVA CORRIDOR FLYOVER PROJECT GEBANG FLYOVER - CONTRACT PACKAGE 2 (NAGREG - GEBANG) WEST JAVA PROVINCE	1 : 50	DECK SLAB REINFORCEMENT ARRANGEMENT P4 - P12 (1 OF 4)	GST-069
	Sign	Sign	Sign	APPROVED BY: Ir. HERRY VAZA M,Eng.Sc NIP. : 110038400 — Sign		FULL SIZE A3		SHEET NO : 69 / 76
	Date	Date	Date	Date				

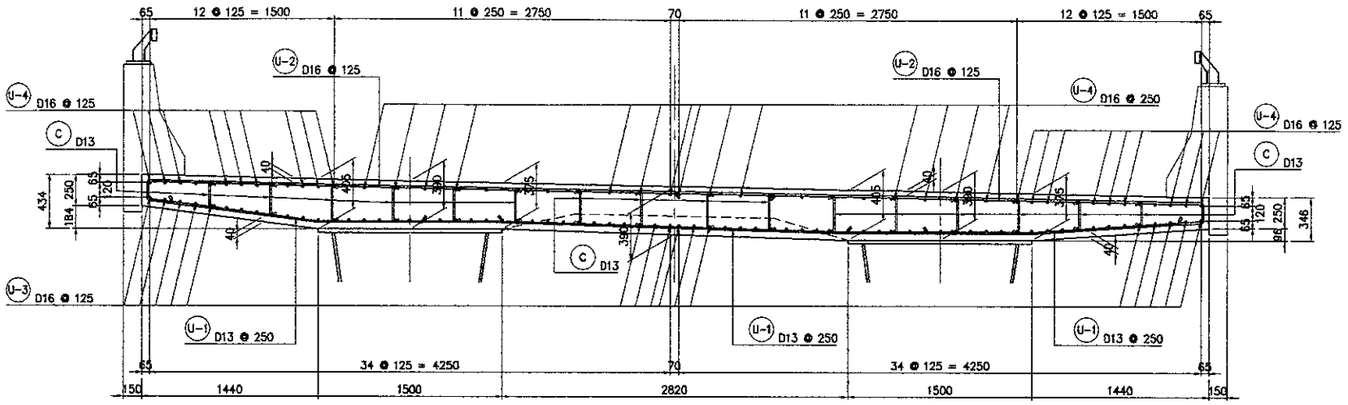

TYPICAL CROSS SECTION REINFORCEMENT AT EXP. JOINT

SCALE : 1:50

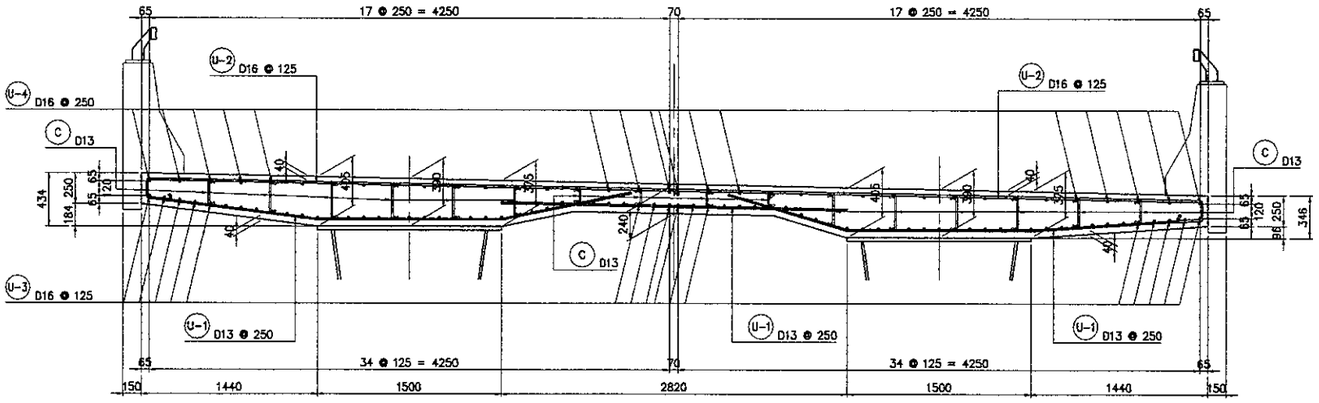

TYPICAL CROSS SECTION REINFORCEMENT AT MIDSPAN

SCALE : 1:50

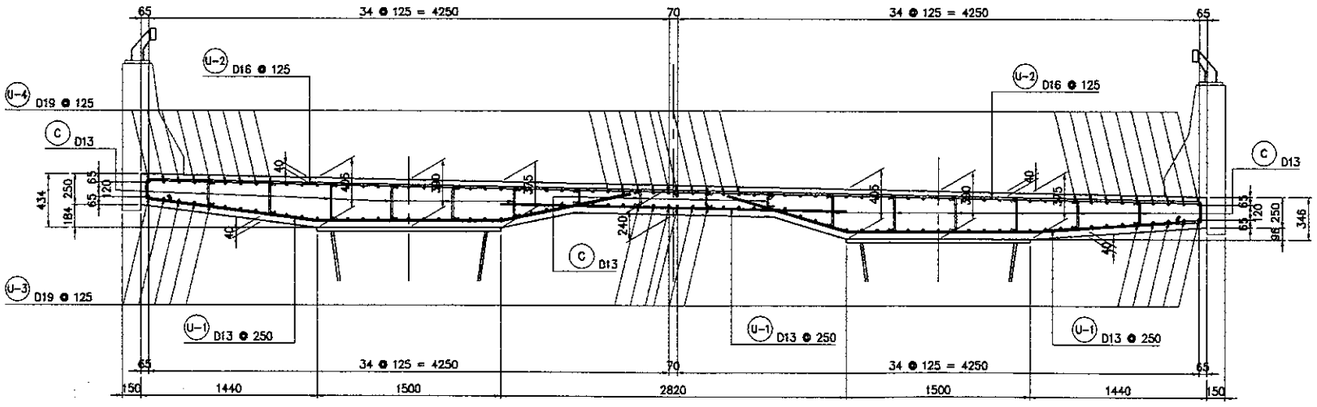

TYPICAL CROSS SECTION REINFORCEMENT AT PIER

SCALE : 1:50

TRANVERSAL REBAR,	LOWER	: U-1
	UPPER	: U-2
LONGITUDINAL REBAR,	LOWER	: U-3
	UPPER	: U-4
ERECTION REBAR		: C
REBAR CLEAR COVER		: 40 mm, ALL

NOTES :

1. ALL DIMENSION ARE IN MILLIMETER UNLESS NOTED OTHERWISE
2. CONCRETE , fc' = 35 MPa
3. REBARS, BJTD 40, fy = 400 MPa
4. THE CONTRACTOR SHALL BE RESPONSIBLE TO CARRY OUT THE FOLLOWING BEFORE CONSTRUCTION :
   - VERIFICATION OF ALL ELEVATIONS AND DIMENSIONS, USING ACTUAL FIELD SURVEY
   - PREPARATION AND SUBMISSION OF SHOP DRAWINGS FOR ALL BRIDGE COMPONENTS FOR THE ENGINEERS APPROVAL

JAPAN INTERNATIONAL COOPERATION AGENCY KATAHIRA & ENGINEERS INTERNATIONAL	DESIGNED BY		CHECKED BY		SUBMITTED BY		REPUBLIC OF INDONESIA MINISTRY OF PUBLIC WORKS DIRECTORATE GENERAL OF HIGHWAYS		PROJECT AND LOCATION :	SCALE :	DRAWING TITLE :	DRAWING NO :
	Name	S. MATSUI	Name	T. OKUMURA	Name	M. KIUCHI	APPROVED BY	Ir. HERRY VAZA M,Eng.Sc NIP. : 110038400	DETAILED DESIGN STUDY OF NORTH JAVA CORRIDOR FLYOVER PROJECT GEBANG FLYOVER - CONTRACT PACKAGE 2 (NAGREG - GEBANG) WEST JAVA PROVINCE	1 : 50 1 : 200	DECK SLAB REINFORCEMENT ARRANGEMENT P4 - P12 (2 OF 4)	GST-070
	Sign		Sign		Sign			Sign		FULL SIZE A3		SHEET NO :
	Date		Date		Date			Date				70 / 76

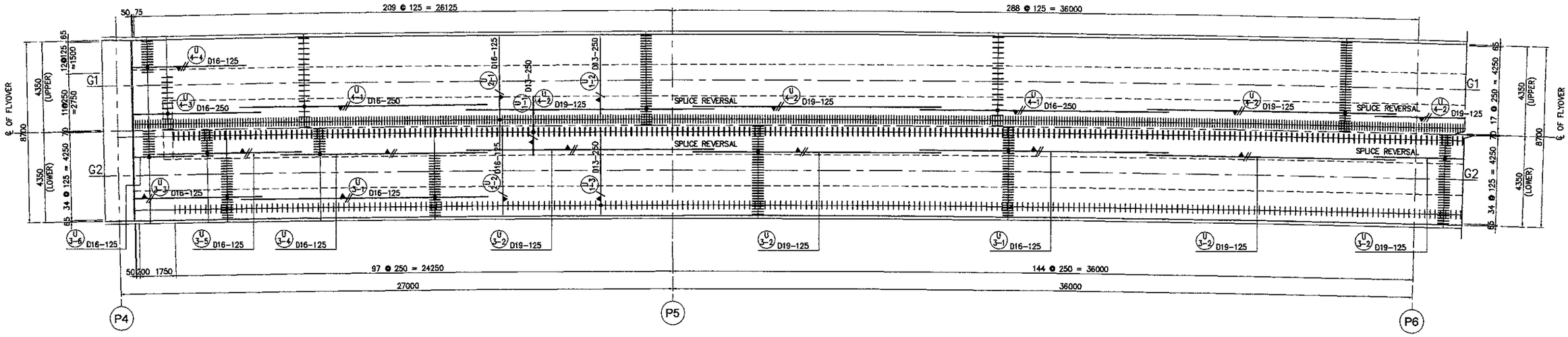

DECK SLAB REINFORCEMENT ARRANGEMENT P4 - P6

SCALE : 1:200

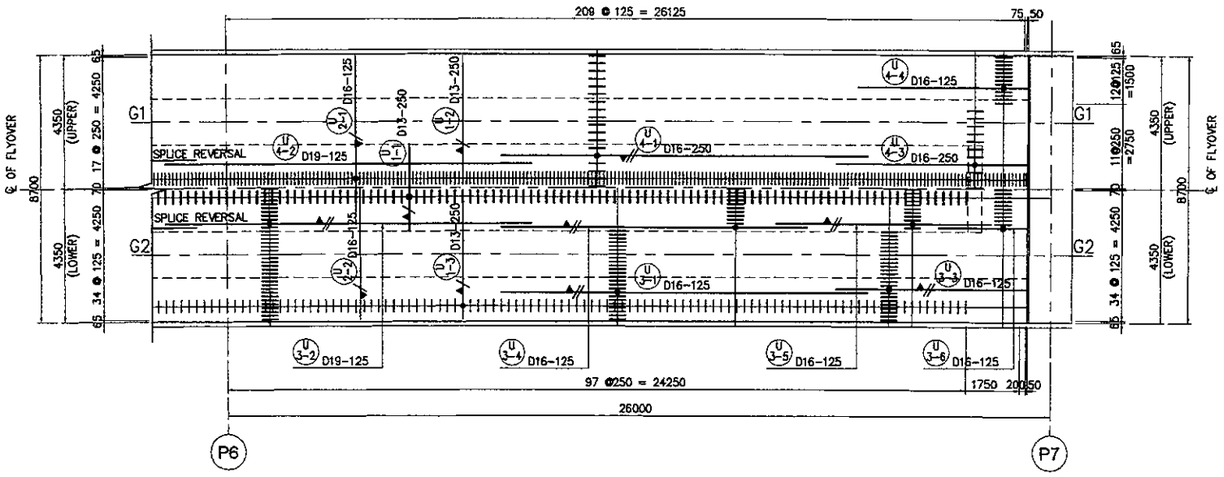

DECK SLAB REINFORCEMENT ARRANGEMENT P6 - P7

SCALE : 1:200

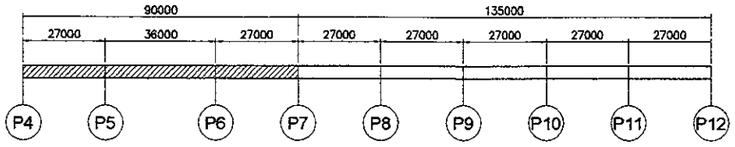

KEY PLAN

NOT TO SCALE

DECK POURING SEQUENCE :

TO CONTROL THE EFFECTS OF CONCRETE SHRINKAGE THE DECK IS TO BE POURED IN SECTIONS NOT EXCEEDING 30 METRES IN LENGTH WITH A MINIMUM SEVEN (7) DAY DELAY BETWEEN ADJOINING POURS. A STAGGERED SEQUENCE OF POURS MAY BE USED.

ERECTION BAR SPACING (3 NOS/Sq.m)

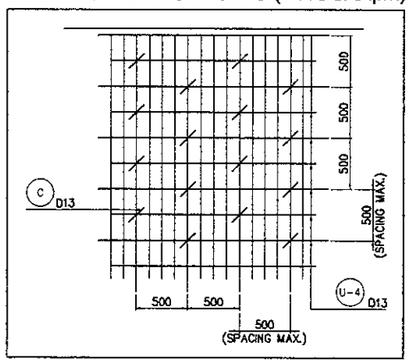

REBARS NOTATION :

- DENOTES TOP REBARS 1st LAYER
- DENOTES TOP REBARS 2nd LAYER
- DENOTES BOTTOM REBARS 1st LAYER
- DENOTES BOTTOM REBARS 2nd LAYER

CLEAR COVERS :

TOP : 40 MM
BOTTOM : 40 MM
SIDE : 40 MM

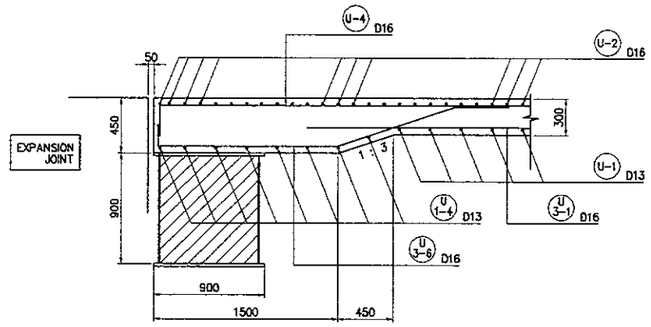

SECTION AT END SLAB THICKNESS

SCALE : 1:50

JAPAN INTERNATIONAL COOPERATION AGENCY KATAHIRA & ENGINEERS INTERNATIONAL	DESIGNED BY	CHECKED BY	SUBMITTED BY	REPUBLIC OF INDONESIA MINISTRY OF PUBLIC WORKS DIRECTORATE GENERAL OF HIGHWAYS	PROJECT AND LOCATION :	SCALE :	DRAWING TITLE :	DRAWING NO :
	Name: S. MATSUI	Name: T. OKUMURA	Name: M. KIUCHI		DETAILED DESIGN STUDY OF NORTH JAVA CORRIDOR FLYOVER PROJECT GEBANG FLYOVER - CONTRACT PACKAGE 2 (NAGREG - GEBANG) WEST JAVA PROVINCE	1 : 50 1 : 200	DECK SLAB REINFORCEMENT ARRANGEMENT P4 - P12 (3 OF 4)	GST-071
	Sign	Sign	Sign	APPROVED BY: Ir. HERRY VAZA M,Eng.Sc NIP. : 110038400		FULL SIZE A3		SHEET NO : 71 / 76
	Date	Date	Date	Sign / Date				

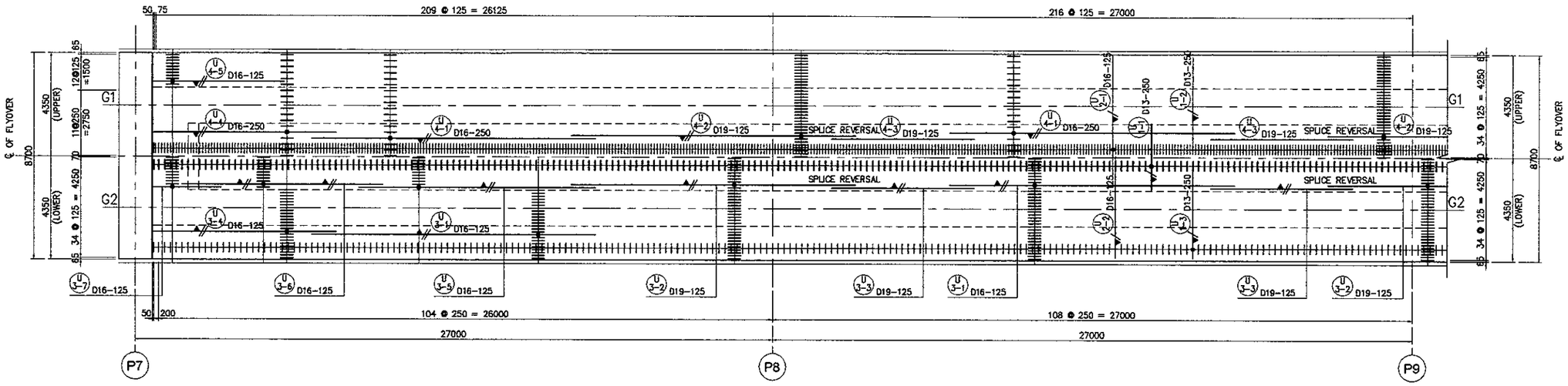

DECK SLAB REINFORCEMENT ARRANGEMENT P7 - P9

SCALE : 1:200

DECK POURING SEQUENCE :

TO CONTROL THE EFFECTS OF CONCRETE SHRINKAGE THE DECK IS TO BE POURED IN SECTIONS NOT EXCEEDING 30 METRES IN LENGTH WITH A MINIMUM SEVEN (7) DAY DELAY BETWEEN ADJOINING POURS. A STAGGERED SEQUENCE OF POURS MAY BE USED.

REBARS NOTATION :

- DENOTES TOP REBARS 1st LAYER
- DENOTES TOP REBARS 2nd LAYER
- DENOTES BOTTOM REBARS 1st LAYER
- DENOTES BOTTOM REBARS 2nd LAYER

CLEAR COVERS :

TOP : 40 MM
BOTTOM : 40 MM
SIDE : 40 MM

ERECTION BAR SPACING (3 NOS/Sq.m)

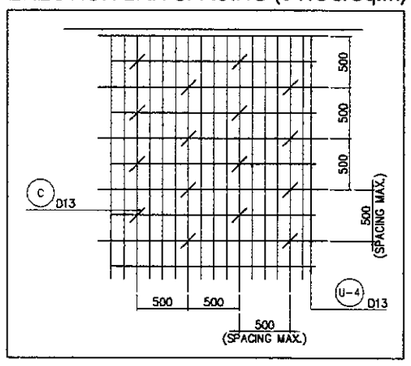

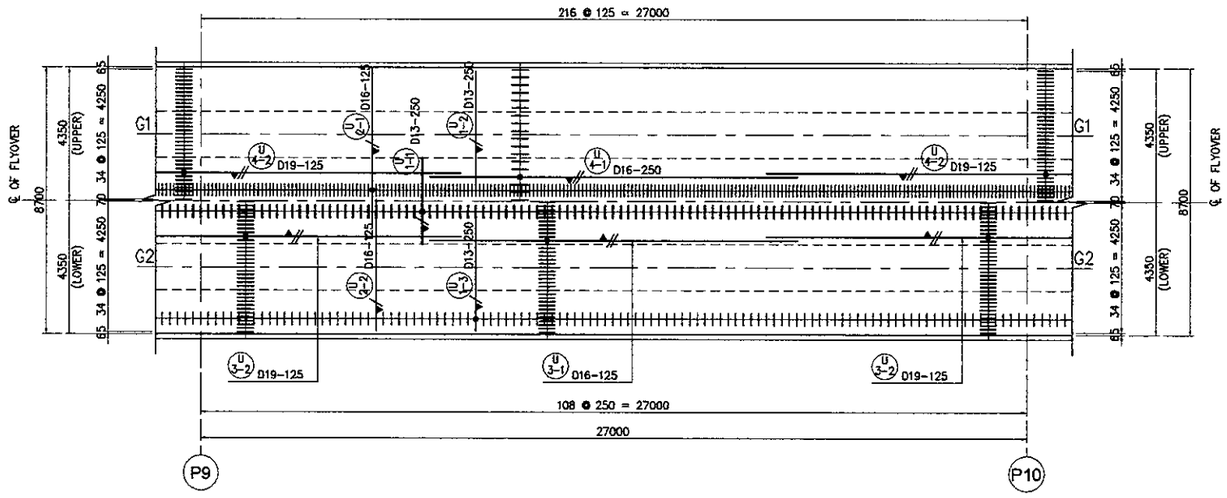

DECK SLAB REINFORCEMENT ARRANGEMENT P9 - P10

SCALE : 1:200

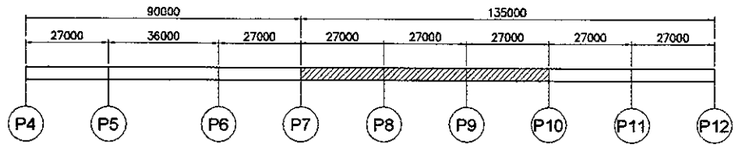

KEY PLAN

NOT TO SCALE

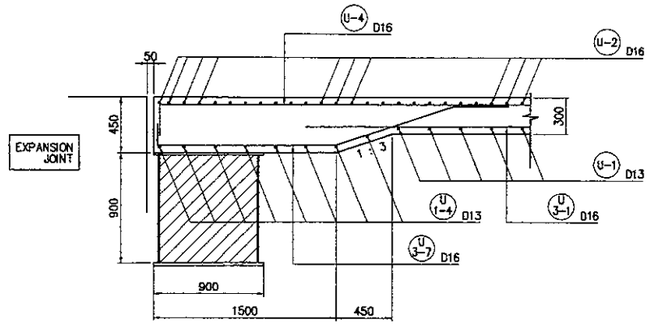

SECTION AT END SLAB THICKNESS

SCALE : 1:50

JAPAN INTERNATIONAL COOPERATION AGENCY KATAHIRA & ENGINEERS INTERNATIONAL	DESIGNED BY	CHECKED BY	SUBMITTED BY	REPUBLIC OF INDONESIA MINISTRY OF PUBLIC WORKS DIRECTORATE GENERAL OF HIGHWAYS	PROJECT AND LOCATION :	SCALE :	DRAWING TITLE :	DRAWING NO :
	Name: S. MATSUI	Name: T. OKUMURA	Name: M. KIUCHI		DETAILED DESIGN STUDY OF NORTH JAVA CORRIDOR FLYOVER PROJECT GEBANG FLYOVER - CONTRACT PACKAGE 2 (NAGREG - GEBANG) WEST JAVA PROVINCE	1 : 50 1 : 200	DECK SLAB REINFORCEMENT ARRANGEMENT P4 - P12 (4 OF 4)	GST-072
	Sign	Sign	Sign	APPROVED BY: Ir. HERRY VAZA M,Eng.Sc NIP. : 110038400 — Sign		FULL SIZE A3		SHEET NO : 72 / 76
	Date	Date	Date	Date				

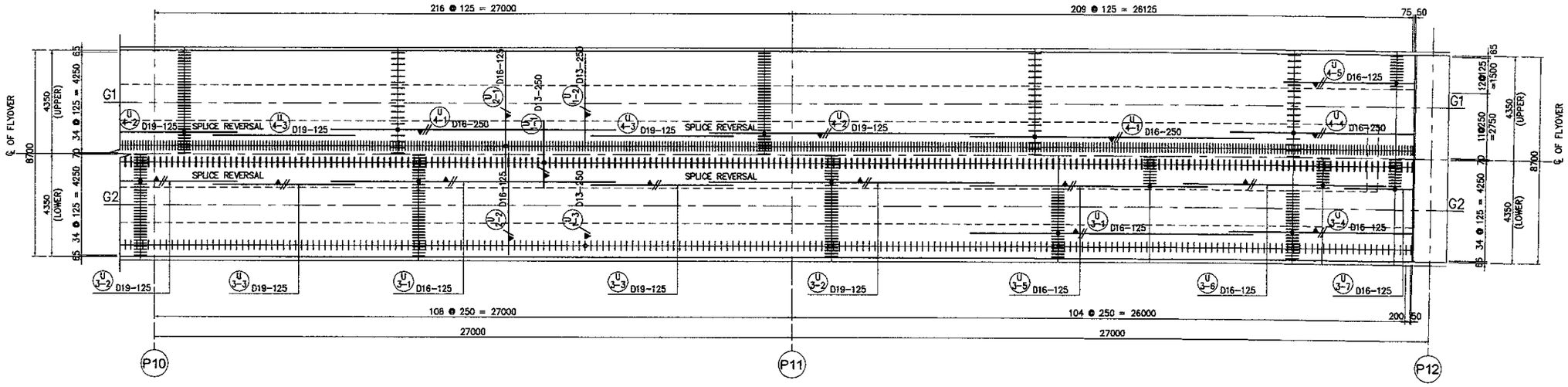

DECK SLAB REINFORCEMENT ARRANGEMENT P10 - P12

SCALE : 1:200

DECK POURING SEQUENCE :

TO CONTROL THE EFFECTS OF CONCRETE SHRINKAGE THE DECK IS TO BE POURED IN SECTIONS NOT EXCEEDING 30 METRES IN LENGTH WITH A MINIMUM SEVEN (7) DAY DELAY BETWEEN ADJOINING POURS. A STAGGERED SEQUENCE OF POURS MAY BE USED.

REBARS NOTATION :

- DENOTES TOP REBARS 1st LAYER
- DENOTES TOP REBARS 2nd LAYER
- DENOTES BOTTOM REBARS 1st LAYER
- DENOTES BOTTOM REBARS 2nd LAYER

CLEAR COVERS :

TOP : 40 MM
BOTTOM : 40 MM
SIDE : 40 MM

ERECTION BAR SPACING (3 NOS/Sq.m)

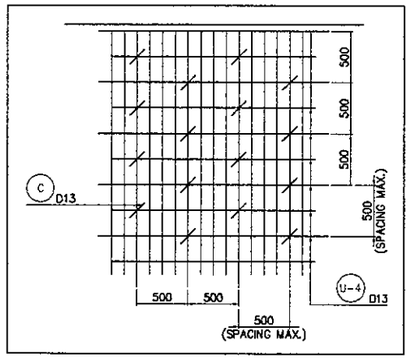

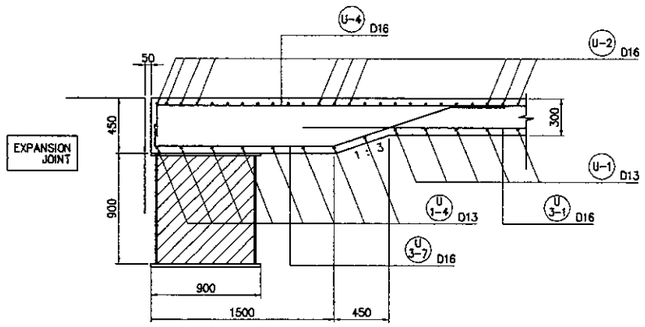

SECTION AT END SLAB THICKNESS

SCALE : 1:50

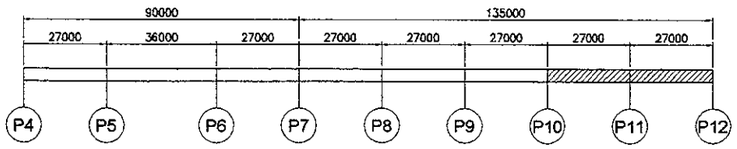

KEY PLAN

NOT TO SCALE

JICA JAPAN INTERNATIONAL COOPERATION AGENCY / KEI KATAHIRA & ENGINEERS INTERNATIONAL	DESIGNED BY	CHECKED BY	SUBMITTED BY	REPUBLIC OF INDONESIA MINISTRY OF PUBLIC WORKS DIRECTORATE GENERAL OF HIGHWAYS	PROJECT AND LOCATION :	SCALE :	DRAWING TITLE :	DRAWING NO :
	Name: S. MATSUI	Name: T. OKUMURA	Name: M. KIUCHI	APPROVED BY: Ir. HERRY VAZA M,Eng.Sc NIP. : 110038400	DETAILED DESIGN STUDY OF NORTH JAVA CORRIDOR FLYOVER PROJECT GEBANG FLYOVER - CONTRACT PACKAGE 2 (NAGREG - GEBANG) WEST JAVA PROVINCE	NOT TO SCALE	DECK SLAB REINFORCEMENT SCHEDULE P4 - P7 (1 OF 2)	GST-73
	Sign	Sign	Sign	Sign		FULL SIZE A3		SHEET NO : 73 / 76
	Date	Date	Date	Date				

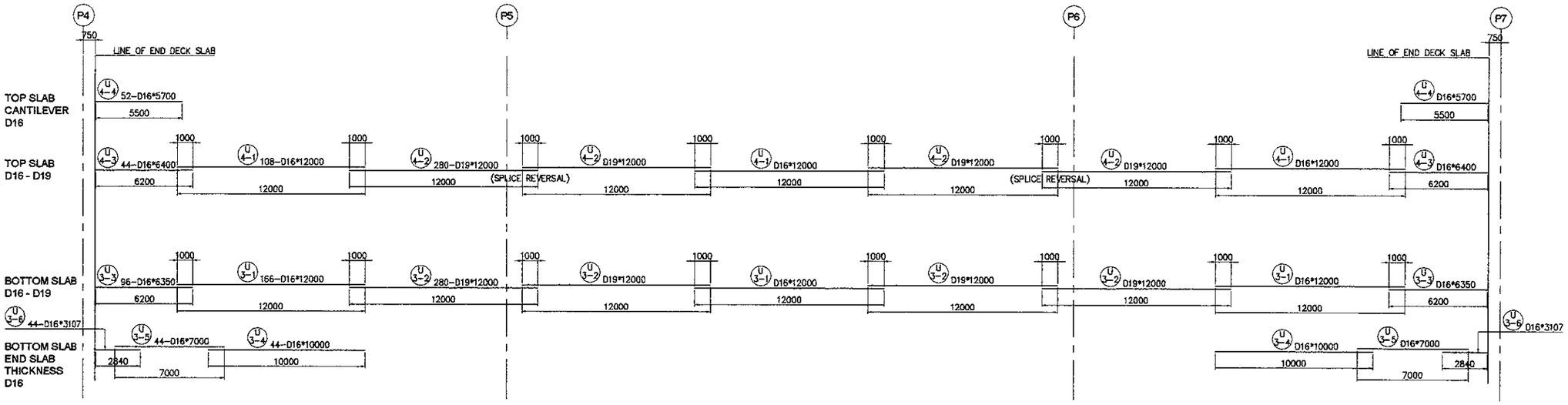

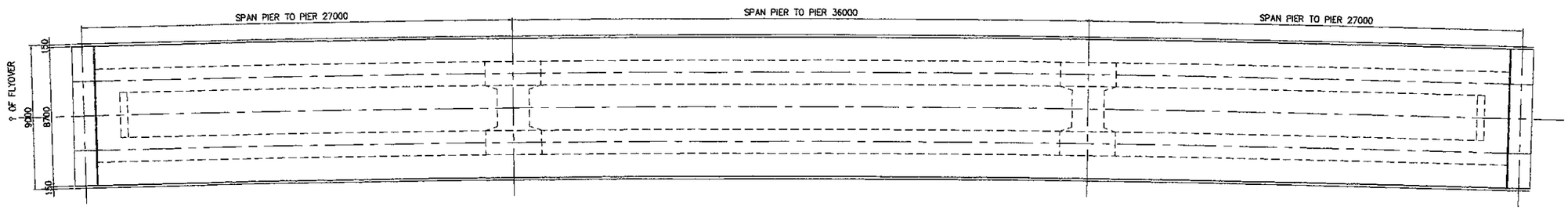

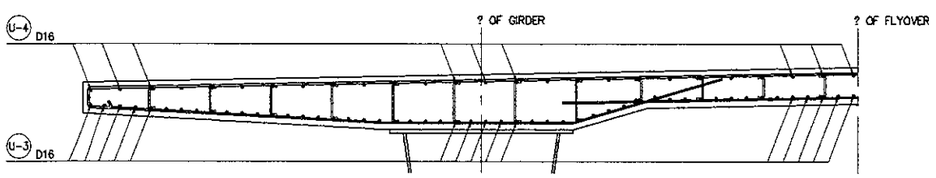

SPLICE LENGTH

TRANVERSAL	D13: 600
	D16: 800
LONGITUDINAL	D16 to D19: 1000

STANDARD HOOKS

BENDING ANGLE OF REBARS	FIGURE	DIAMETER OF REBARS	DIAMETER OF BEND OF REBARS OUT TO OUT	STRAIGHT EXTENSION LENGTH
90°	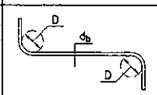	D10 TO 16 GENERAL	6 db	6 db
		D10 TO 16 STIRRUP AND TIES	4 db	6 db
		D32	6 db	12 db
135°	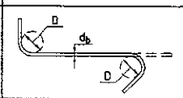	D10 to D25	8 db	6 db

JICA JAPAN INTERNATIONAL COOPERATION AGENCY / KEI KATAHIRA & ENGINEERS INTERNATIONAL	DESIGNED BY	CHECKED BY	SUBMITTED BY	REPUBLIC OF INDONESIA MINISTRY OF PUBLIC WORKS DIRECTORATE GENERAL OF HIGHWAYS	PROJECT AND LOCATION :	SCALE :	DRAWING TITLE :	DRAWING NO :
	Name S. MATSUI	Name T. OKUMURA	Name M. KIUCHI		DETAILED DESIGN STUDY OF NORTH JAVA CORRIDOR FLYOVER PROJECT GEBANG FLYOVER - CONTRACT PACKAGE 2 (NAGREG - GEBANG) WEST JAVA PROVINCE	NOT TO SCALE	DECK SLAB REINFORCEMENT SCHEDULE P4 - P7 (2 OF 2)	GST-074
	Sign	Sign	Sign	APPROVED BY Ir. HERRY VAZA M,Eng.Sc NIP. : 110038400 Sign				SHEET NO :
	Date	Date	Date	Date		FULL SIZE A3		74 / 76

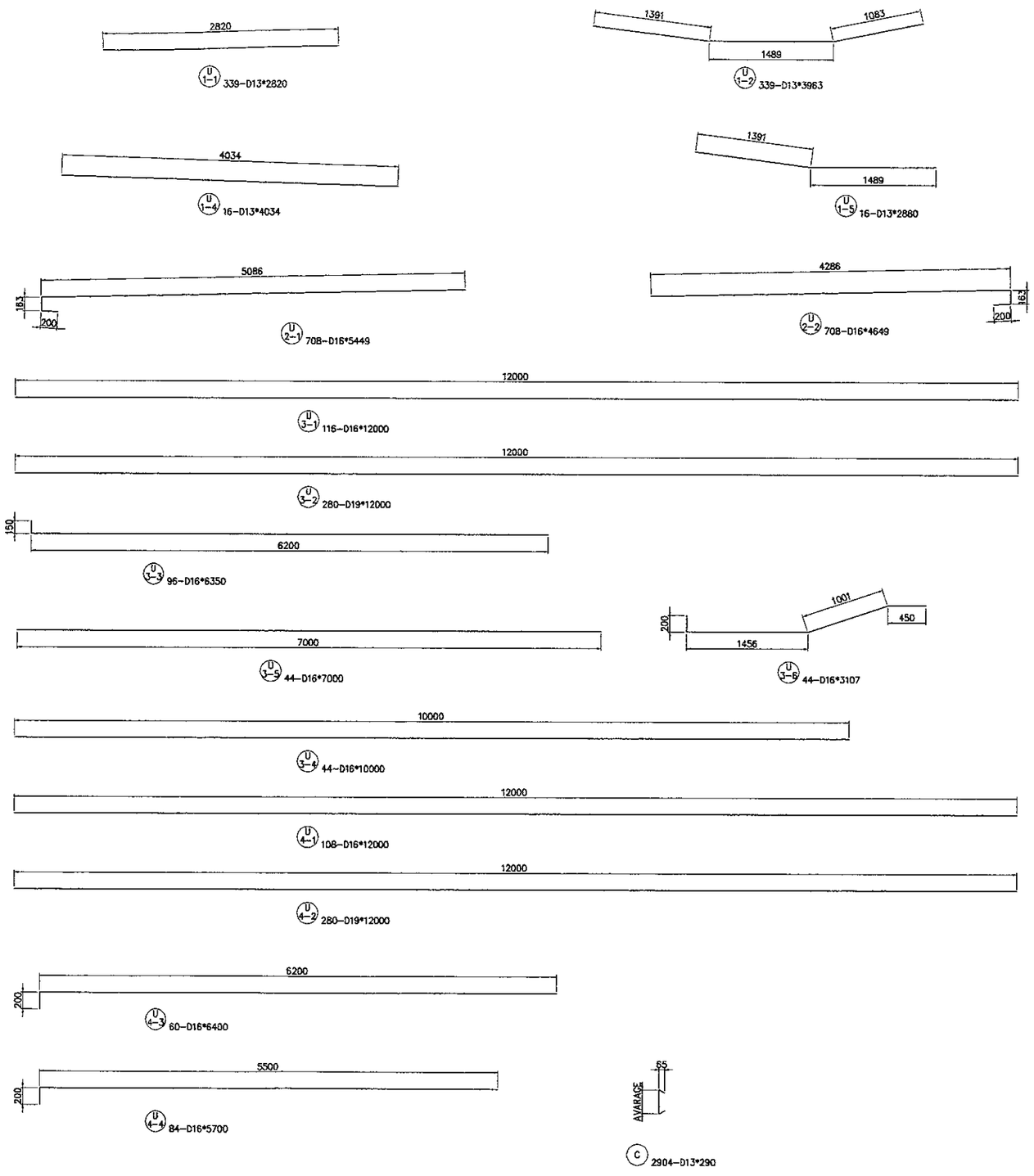

BAR BENDING SCHEDULE

REBAR NAME	DIA. (mm)	LENGTH (mm)	NOS.	UNIT WEIGHT (kg/m)	WEIGHT (kg)	TOTAL WEIGHT (kg)	DIAGRAM	REMARKS
U1-1	D13	2820	339	1.040	2.933	994.22		
U1-2	D13	3963	339	1.040	4.122	1397.20		
U1-3	D13	3887	339	1.040	4.042	1370.40		
U1-4	D13	4034	16	1.040	4.195	67.13		
U1-5	D13	2880	16	1.040	2.995	47.92		
U1-6	D13	2870	16	1.040	2.985	47.76		
U2-1	D16	5449	708	1.580	8.609	6095.47		
U2-2	D16	4649	708	1.580	7.345	5200.56		
U3-1	D16	12000	116	1.580	18.960	2199.36		
U3-2	D19	12000	280	2.230	26.760	7492.80		
U3-3	D19	6350	96	2.230	14.161	1359.41		
U3-4	D16	10000	44	1.580	15.800	695.20		
U3-5	D16	7000	44	1.580	11.060	486.64		
U3-6	D16	3107	44	1.580	4.909	216.00		
U4-1	D16	12000	108	1.580	18.960	2047.68		
U4-2	D19	12000	280	2.230	26.760	7492.80		
U4-3	D19	6400	60	2.230	14.272	856.32		
U4-4	D16	5700	84	1.580	9.006	756.504		
C	D13	290	2904	1.040	0.302	875.85		AVERAGE LENGTH
TOTAL STEEL WEIGHT AT SLAB P4 - P7						39709.20		

JICA JAPAN INTERNATIONAL COOPERATION AGENCY	DESIGNED BY	CHECKED BY	SUBMITTED BY	REPUBLIC OF INDONESIA MINISTRY OF PUBLIC WORKS DIRECTORATE GENERAL OF HIGHWAYS	PROJECT AND LOCATION :	SCALE :	DRAWING TITLE :	DRAWING NO :
KEI KATAHIRA & ENGINEERS INTERNATIONAL	Name S. MATSUI	Name T. OKUMURA	Name M. KIUCHI	APPROVED BY Ir. HERRY VAZA M,Eng.Sc NIP. : 110038400	DETAILED DESIGN STUDY OF NORTH JAVA CORRIDOR FLYOVER PROJECT GEBANG FLYOVER - CONTRACT PACKAGE 2 (NAGREG - GEBANG) WEST JAVA PROVINCE	NOT TO SCALE	DECK SLAB REINFORCEMENT SCHEDULE P7 - P12 (1 OF 2)	GST-75
	Sign	Sign	Sign	Sign		FULL SIZE A3		SHEET NO : 75 / 76
	Date	Date	Date	Date				

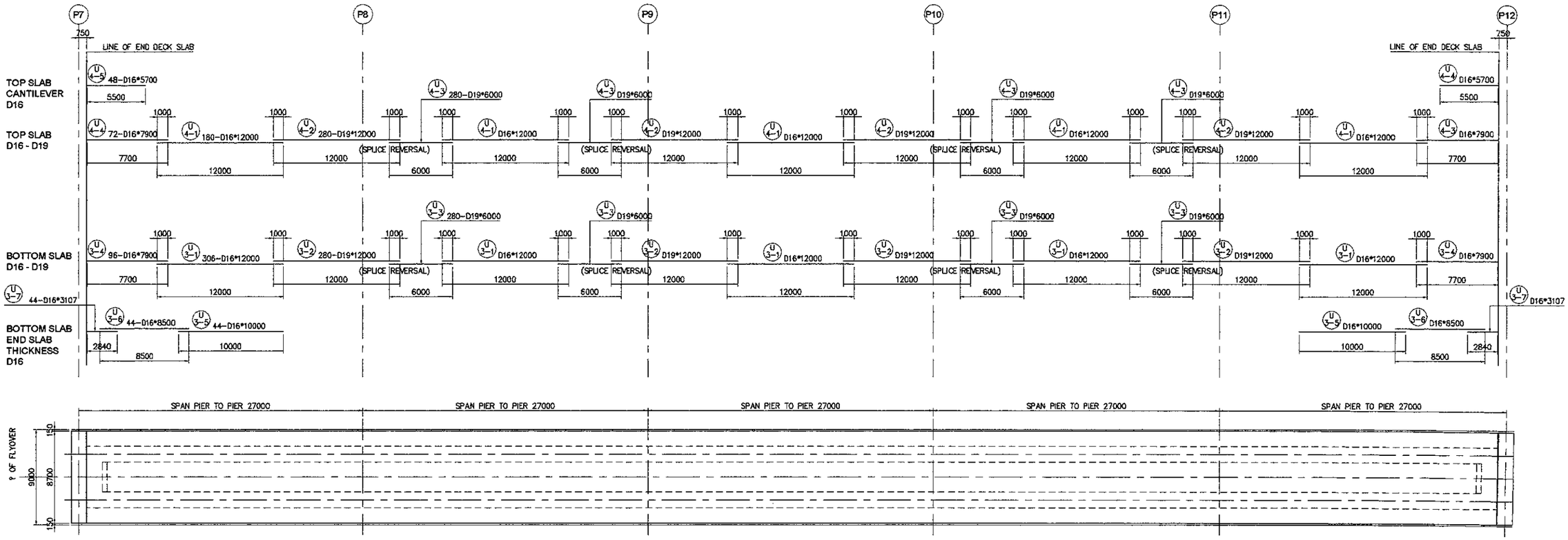

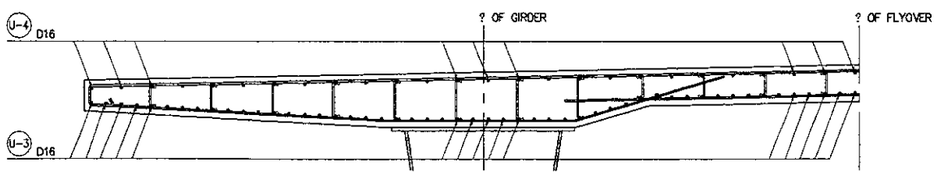

SPLICE LENGTH

TRANVERSAL	D13	500
	D16	800
LONGITUDINAL	D16 to D19	1000

STANDARD HOOKS

BENDING ANGLE OF REBARS	FIGURE	DIAMETER OF REBARS	DIAMETER OF BEND OF REBARS OUT TO OUT	STRAIGHT EXTENSION LENGTH
90°		D10 TO 16 GENERAL	6 db	6 db
		D10 TO 16 STIRRUP AND TIES	4 db	6 db
		D32	6 db	12 db
135°		D10 to D25	8 db	6 db

JICA JAPAN INTERNATIONAL COOPERATION AGENCY / KEI KATAHIRA & ENGINEERS INTERNATIONAL	DESIGNED BY	CHECKED BY	SUBMITTED BY	REPUBLIC OF INDONESIA MINISTRY OF PUBLIC WORKS DIRECTORATE GENERAL OF HIGHWAYS	PROJECT AND LOCATION :	SCALE :	DRAWING TITLE :	DRAWING NO :
	Name: S. MATSUI	Name: T. OKUMURA	Name: M. KIUCHI	APPROVED BY: Ir. HERRY VAZA M,Eng.Sc NIP. : 110038400	DETAILED DESIGN STUDY OF NORTH JAVA CORRIDOR FLYOVER PROJECT GEBANG FLYOVER - CONTRACT PACKAGE 2 (NAGREG - GEBANG) WEST JAVA PROVINCE	NOT TO SCALE	DECK SLAB REINFORCEMENT SCHEDULE P7 - P12 (2 OF 2)	GST-76
	Sign	Sign	Sign	Sign		FULL SIZE A3		SHEET NO : 76 / 76
	Date	Date	Date	Date				

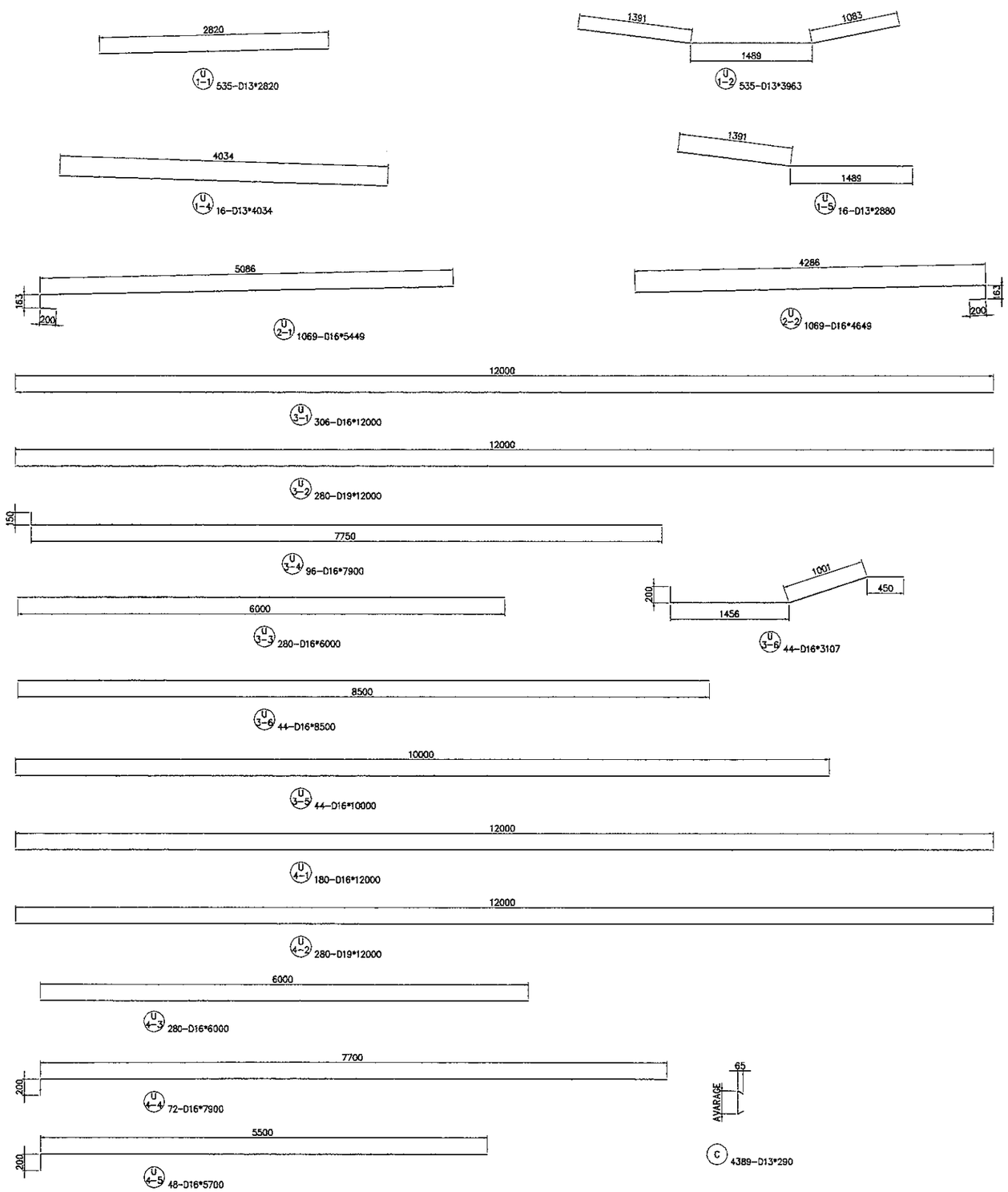

BAR BENDING SCHEDULE

REBAR NAME	DIA. (mm)	LENGTH (mm)	NOS.	UNIT WEIGHT (kg/m')	WEIGHT (kg)	TOTAL WEIGHT (kg)	DIAGRAM	REMARKS
U1-1	D13	2820	535	1.040	2.933	1569.05		
U1-2	D13	3963	535	1.040	4.122	2205.01		
U1-3	D13	3887	535	1.040	4.042	2162.73		
U1-4	D13	4034	16	1.040	4.195	67.13		
U1-5	D13	2880	16	1.040	2.995	47.92		
U1-6	D13	2870	16	1.040	2.985	47.76		
U2-1	D16	5449	1069	1.580	8.609	9203.47		
U2-2	D16	4649	1069	1.580	7.345	7852.25		
U3-1	D16	12000	306	1.580	18.960	5801.76		
U3-2	D19	12000	280	2.230	26.760	7492.80		
U3-3	D19	6000	280	2.230	13.380	3746.40		
U3-4	D16	7900	96	1.580	12.482	1198.27		
U3-5	D16	10000	44	1.580	15.800	695.20		
U3-6	D16	8500	44	1.580	13.430	590.92		
U3-7	D16	3107	44	1.580	4.909	216.00		
U4-1	D16	12000	180	1.580	18.960	3412.80		
U4-2	D19	12000	280	2.230	26.760	7492.80		
U4-3	D19	6000	280	2.230	13.380	3746.40		
U4-4	D16	7900	72	1.580	12.482	898.70		
U4-5	D16	5700	48	1.580	9.006	432.29		
C	D13	290	4389	1.040	0.302	1323.72		AVERAGE LENGTH
TOTAL STEEL WEIGHT AT SLAB P7 - P12						60203.38		

JAPAN INTERNATIONAL
COOPERATION AGENCY

DIRECTORATE GENERAL OF HIGHWAY
MINISTRY OF PUBLIC WORKS
REPUBLIC OF INDONESIA

CONCRETE SUPERSTRUCTURE

KATAHIRA & ENGINEERS INTERNATIONAL

JAPAN INTERNATIONAL COOPERATION AGENCY KATAHIRA & ENGINEERS INTERNATIONAL	DESIGNED BY	CHECKED BY	SUBMITTED BY	REPUBLIC OF INDONESIA MINISTRY OF PUBLIC WORKS DIRECTORATE GENERAL OF HIGHWAYS	PROJECT AND LOCATION :	SCALE :	DRAWING TITLE :	DRAWING NO :
	Name H. HONDA	Name T. OKUMURA	Name M. KIUCHI		DETAILED DESIGN STUDY OF NORTH JAVA CORRIDOR FLYOVER PROJECT GEBANG FLYOVER - CONTRACT PACKAGE 2 (NAGREG - GEBANG) WEST JAVA PROVINCE	1 : 250 1 : 200	COORDINATES AND ELEVATION FOR PC GIRDER	GCL-001
	Sign	Sign	Sign	APPROVED BY Ir. HERRY VAZA M,Eng.Sc NIP. : 110038400 Sign		FULL SIZE A3		SHEET NO : 01 / 21
	Date	Date	Date	Date				

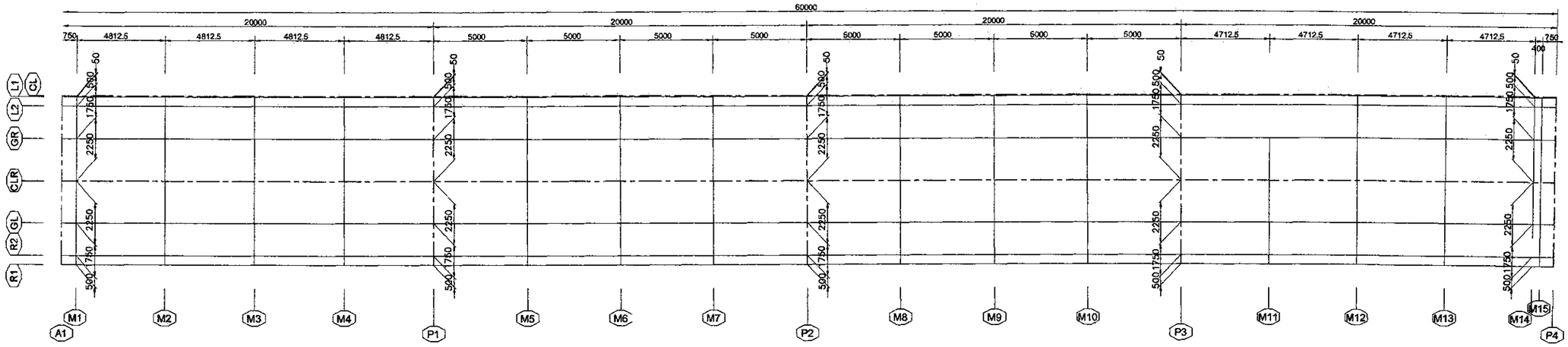

PLAN VIEW

SCALE 1:250

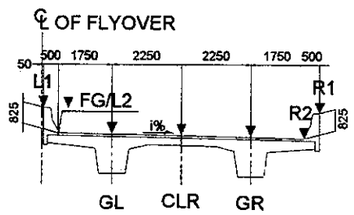

SECTION VIEW

SCALE 1:200

LIST OF COORDINATES

LABEL	STA	A1	M1	M2	M3	M4	P1	M5	M6	M7	P2	M8	M9	M10	P3	M11	M12	M13	M14	M15	P4
		0+316.0000	0+316.7500	0+321.5625	0+326.3750	0+331.1875	0+336.0000	0+341.0000	0+346.0000	0+351.0000	0+356.0000	0+361.0000	0+366.0000	0+371.0000	0+376.0000	0+380.7125	0+385.4250	0+390.1375	0+394.8500	0+395.2500	0+396.0000
CL	E	248626.7067	248627.4383	248632.1334	248636.8304	248641.5293	248646.2300	248651.1158	248656.0033	248660.8910	248665.7786	248670.6662	248675.5539	248680.4415	248685.3275	248689.9292	248694.5277	248699.1229	248703.7149	248704.1045	248704.8350
	N	9245839.9535	9245839.7881	9245838.7318	9245837.6839	9245836.6443	9245835.6131	9245834.5507	9245833.4958	9245832.4418	9245831.3878	9245830.3338	9245829.2798	9245828.2258	9245827.1639	9245826.1481	9245825.1179	9245824.0732	9245823.0141	9245822.9236	9245822.7535
	Z	8.8170	8.8522	9.0784	9.3046	9.5308	9.7570	9.9920	10.2270	10.4620	10.6970	10.9320	11.1667	11.3919	11.6031	11.7892	11.9630	12.1242	12.2730	12.2851	12.3074
L1	E	248626.6957	248627.4272	248632.1225	248636.8196	248641.5186	248646.2194	248651.1053	248655.9928	248660.8804	248665.7681	248670.6557	248675.5433	248680.4310	248685.3168	248689.9183	248694.5167	248699.1118	248703.7036	248704.0932	248704.8236
	N	9245839.9047	9245839.7393	9245838.6830	9245837.6351	9245836.5955	9245835.5643	9245834.5018	9245833.4469	9245832.3929	9245831.3389	9245830.2849	9245829.2309	9245828.1769	9245827.1150	9245826.0993	9245825.0691	9245824.0245	9245822.9654	9245822.8749	9245822.7048
	Z	9.6420	9.6772	9.9034	10.1296	10.3558	10.5820	10.8170	11.0520	11.2870	11.5220	11.7570	11.9917	12.2169	12.4281	12.6142	12.7880	12.9492	13.0980	13.1101	13.1324
L2	E	248626.5854	248627.3171	248632.0132	248636.7111	248641.4110	248646.1127	248650.9995	248655.8874	248660.7750	248665.6627	248670.5503	248675.4379	248680.3256	248685.2098	248689.8098	248694.4066	248698.0002	248703.5904	248703.9799	248704.7101
	N	9245839.4170	9245839.2516	9245838.1951	9245837.1470	9245836.1072	9245835.0758	9245834.0131	9245832.9582	9245831.9042	9245830.8502	9245829.7962	9245828.7422	9245827.6882	9245826.6266	9245825.6112	9245824.5814	9245823.5371	9245822.4784	9245822.3879	9245822.2179
	Z	8.8170	8.8522	9.0784	9.3046	9.5308	9.7570	9.9920	10.2270	10.4620	10.6970	10.9320	11.1667	11.3919	11.6031	11.7892	11.9630	12.1242	12.2730	12.2851	12.3074
GL	E	248626.1993	248626.9314	248631.6306	248636.3316	248641.0345	248645.7392	248650.6292	248655.5185	248660.4061	248665.2938	248670.1814	248675.0690	248679.9567	248684.8352	248689.4299	248694.0214	248698.6096	248703.1945	248703.5835	248704.3128
	N	9245837.7101	9245837.5446	9245836.4874	9245835.4386	9245834.3982	9245833.3661	9245832.3027	9245831.2475	9245830.1935	9245829.1395	9245828.0855	9245827.0315	9245825.9775	9245824.9172	9245823.9030	9245822.8743	9245821.8313	9245820.7738	9245820.6834	9245820.5136
	Z	8.7820	8.8172	9.0434	9.2696	9.4958	9.7220	9.9570	10.1920	10.4270	10.6620	10.8970	11.1317	11.3569	11.5681	11.7542	11.9280	12.0892	12.2380	12.2501	12.2724
CLR	E	248625.7029	248626.4356	248631.1387	248635.8436	248640.5504	248645.2591	248650.1531	248655.0442	248659.9318	248664.8195	248669.7071	248674.5947	248679.4824	248684.3537	248688.9415	248693.5260	248698.1073	248702.6854	248703.0738	248703.8020
	N	9245835.5156	9245835.3499	9245834.2919	9245833.2422	9245832.2009	9245831.1680	9245830.1037	9245829.0481	9245827.9941	9245826.9401	9245825.8861	9245824.8321	9245823.7781	9245822.7193	9245821.7066	9245820.6795	9245819.6380	9245818.5822	9245818.4919	9245818.3223
	Z	8.7370	8.7722	8.9984	9.2246	9.4508	9.6770	9.9120	10.1470	10.3820	10.6170	10.8520	11.0867	11.3119	11.5231	11.7092	11.8830	12.0442	12.1930	12.2051	12.2274
GR	E	248625.2064	248625.9398	248630.6468	248635.3556	248640.0664	248644.7789	248649.6770	248654.5699	248659.4575	248664.3452	248669.2328	248674.1204	248679.0081	248683.8722	248688.4530	248693.0307	248697.6051	248702.1762	248702.5641	248703.2912
	N	9245833.3210	9245833.1552	9245832.0963	9245831.0457	9245830.0036	9245828.9698	9245827.9046	9245826.8486	9245825.7946	9245824.7406	9245823.6866	9245822.6326	9245821.5786	9245820.5214	9245819.5103	9245818.4847	9245817.4448	9245816.3905	9245816.3004	9245816.1311
	Z	8.6920	8.7272	8.9534	9.1796	9.4058	9.6320	9.8670	10.1020	10.3370	10.5720	10.8070	11.0417	11.2669	11.4781	11.6842	11.8380	11.9992	12.1480	12.1601	12.1824
R2	E	248624.8203	248625.5542	248630.2642	248634.9761	248639.6899	248644.4055	248649.3068	248654.2010	248659.0886	248663.9763	248668.8639	248673.7515	248678.6392	248683.4977	248688.0731	248692.6454	248697.2145	248701.7803	248702.1677	248702.8940
	N	9245831.6142	9245831.4483	9245830.3886	9245829.3374	9245828.2945	9245827.2601	9245826.1943	9245825.1379	9245824.0839	9245823.0299	9245821.9759	9245820.9219	9245819.8679	9245818.8120	9245817.8020	9245816.7777	9245815.7390	9245814.6859	9245814.5999	9245814.4267
	Z	8.6570	8.6922	8.9184	9.1446	9.3708	9.5970	9.8320	10.0670	10.3020	10.5370	10.7720	11.0067	11.2319	11.4431	11.6292	11.8030	11.9642	12.1130	12.1251	12.1474
R1	E	248624.7100	248625.4440	248630.1549	248634.8677	248639.5823	248644.2988	248649.2010	248654.0956	248658.9832	248663.8709	248668.7585	248673.6461	248678.5338	248683.3906	248687.9646	248692.5354	248697.1029	248701.6671	248702.0544	248702.7805
	N	9245831.1265	9245830.9605	9245829.9007	9245828.8493	9245827.8062	9245826.7716	9245825.7056	9245824.6492	9245823.5952	9245822.5412	9245821.4872	9245820.4332	9245819.3792	9245818.3238	9245817.3139	9245816.2899	9245815.2516	9245814.1989	9245814.1089	9245813.9398
	Z	9.4820	9.5172	9.7434	9.9696	10.1958	10.4220	10.6570	10.8920	11.1270	11.3620	11.5970	11.8317	12.0569	12.2681	12.4542	12.6280	12.7892	12.9380	12.9501	12.9724

JAPAN INTERNATIONAL COOPERATION AGENCY KATAHIRA & ENGINEERS INTERNATIONAL	DESIGNED BY	CHECKED BY	SUBMITTED BY	REPUBLIC OF INDONESIA MINISTRY OF PUBLIC WORKS DIRECTORATE GENERAL OF HIGHWAYS	PROJECT AND LOCATION :	SCALE :	DRAWING TITLE :	DRAWING NO :
	Name: H. HONDA	Name: T. OKUMURA	Name: M. KIUCHI		DETAILED DESIGN STUDY OF NORTH JAVA CORRIDOR FLYOVER PROJECT GEBANG FLYOVER - CONTRACT PACKAGE 2 (NAGREG - GEBANG) WEST JAVA PROVINCE	NOT TO SCALE	QUANTITIES SUMMARY FOR PC SUPERSTRUCTURE A1~P4, P8~A2	GCL-002
	Sign	Sign	Sign	APPROVED BY: Ir. HERRY VAZA M,Eng.Sc NIP. : 110038400		FULL SIZE A3		SHEET NO : 02 / 21
	Date	Date	Date	Sign / Date				

QUANTITY SUMMARY FOR PC SUPERSTRUCTURE

NO.		UNIT	QUANTITY	NOTES
1	CONCRETE f'c = 35 MPa	m^3	856.75	
2	PC CABLE DECK SLAB	kg	7,886.56	
3	DEAD END ANCHORAGE PC DECK SLAB	pcs	250	
4	STRESSING ANCHORAGE PC DECK SLAB	pcs	250	
5	PC CABLE PPC GIRDER	kg	17,861.43	
6	DEAD END ANCHORAGE PPC GIRDER	pcs	24	
7	STRESSING ANCHORAGE PPC GIRDER	pcs	24	
8	COUPLER	pcs	48	
9	REBAR	ton	–	
10	WATERPROOFING	m^2		
11	PAVEMENT	m^2	–	HIGHWAY PORTION

JAPAN INTERNATIONAL COOPERATION AGENCY KATAHIRA & ENGINEERS INTERNATIONAL	DESIGNED BY	CHECKED BY	SUBMITTED BY	REPUBLIC OF INDONESIA MINISTRY OF PUBLIC WORKS DIRECTORATE GENERAL OF HIGHWAYS	PROJECT AND LOCATION :	SCALE :	DRAWING TITLE :	DRAWING NO :
	Name: H. HONDA	Name: T. OKUMURA	Name: M. KIUCHI		DETAILED DESIGN STUDY OF NORTH JAVA CORRIDOR FLYOVER PROJECT GEBANG FLYOVER - CONTRACT PACKAGE 2 (NAGREG - GEBANG) WEST JAVA PROVINCE	1 : 200 1 : 100	DIMENSION PLAN OF PC SUPERSTRUCTURE A1 - P2	GCL-003
	Sign	Sign	Sign	APPROVED BY: Ir. HERRY VAZA M,Eng.Sc NIP. : 110038400 — Sign		FULL SIZE A3		SHEET NO : 03 / 21
	Date	Date	Date	Date				

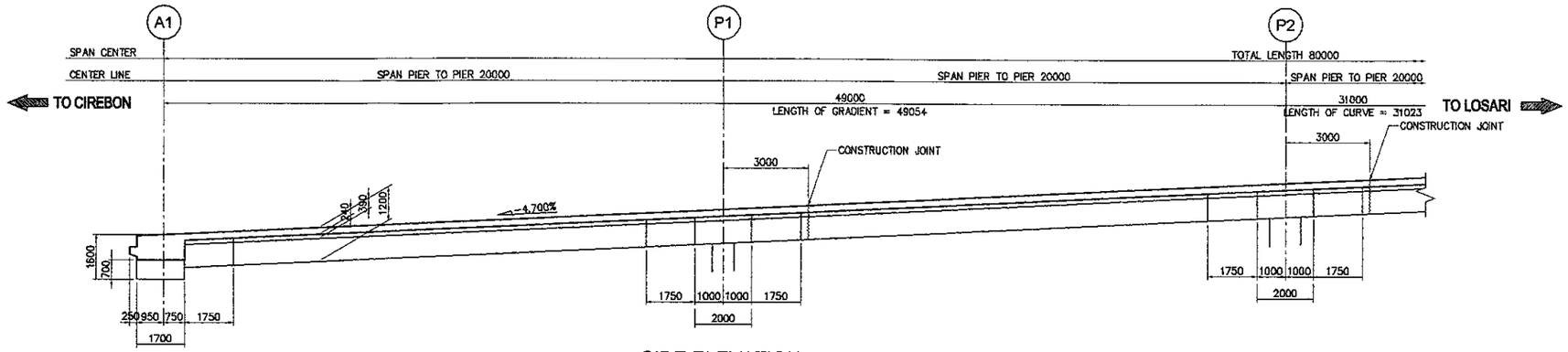

SIDE ELEVATION
SCALE 1 : 200

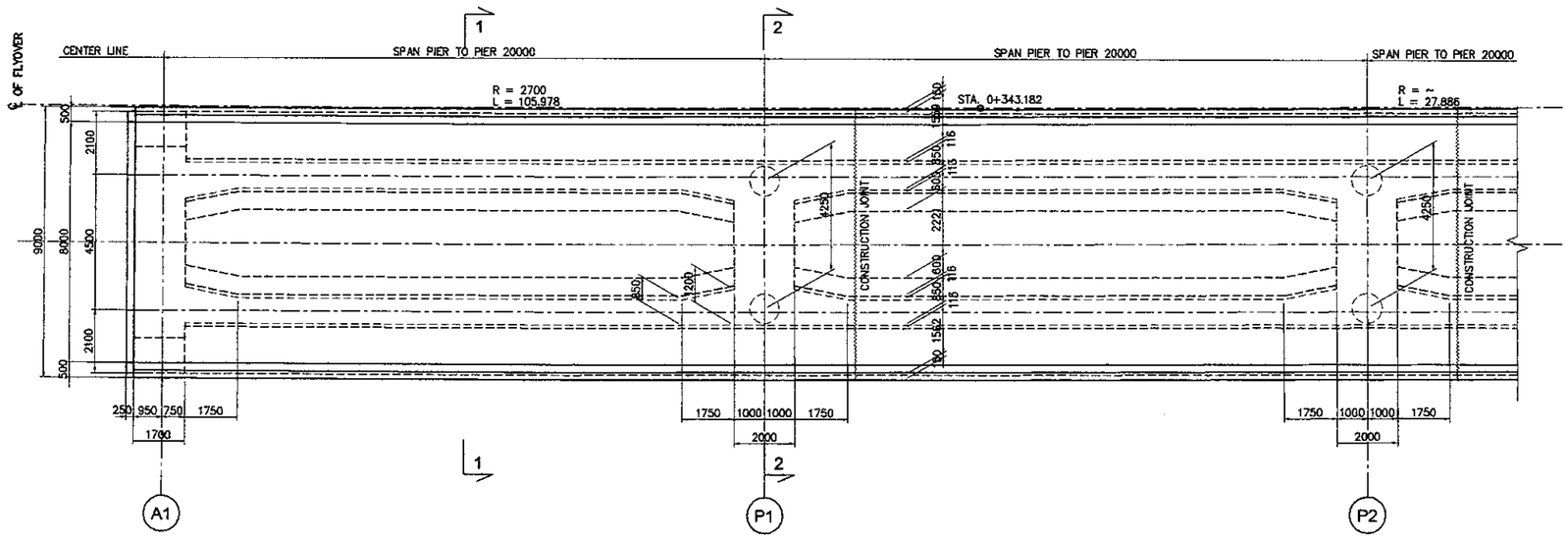

P L A N
SCALE 1 : 200

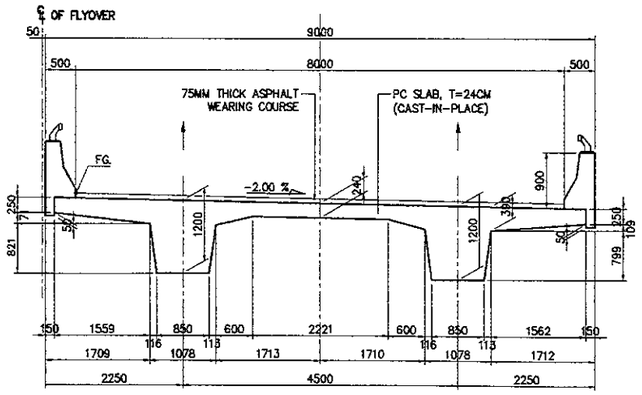

SECTION 1-1
SCALE 1 : 100

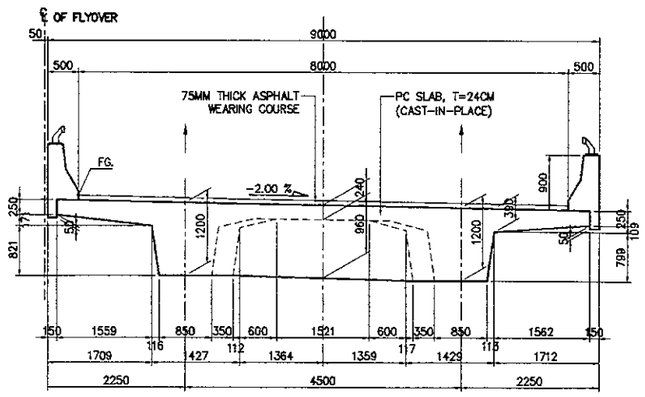

SECTION 2-2
SCALE 1 : 100

NOTES :

1. All dimension are in mm unless noted otherwise.
2. Concrete Girder and Slab fc'= 35 MPa.
3. All Reinforcing steel shall be BJTD 40 or ASTM A615 Grade 60 deformed bars.
4. The Contractor shall be responsible to carry out the following before Construction :
   a) Verification of all elevations and dimensions, using actual field survey.
   b) Preparation and submission of shop drawings for all bridge components for the Engineer's approval.

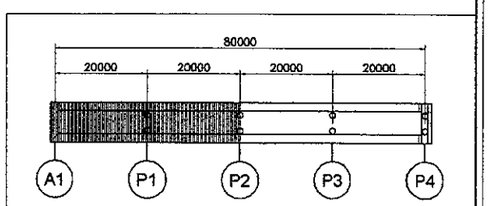

KEY PLAN

JICA JAPAN INTERNATIONAL COOPERATION AGENCY / KEI KATAHIRA & ENGINEERS INTERNATIONAL	DESIGNED BY	CHECKED BY	SUBMITTED BY	REPUBLIC OF INDONESIA MINISTRY OF PUBLIC WORKS DIRECTORATE GENERAL OF HIGHWAYS	PROJECT AND LOCATION :	SCALE :	DRAWING TITLE :	DRAWING NO :
	Name: H. HONDA	Name: T. OKUMURA	Name: M. KIUCHI		DETAILED DESIGN STUDY OF NORTH JAVA CORRIDOR FLYOVER PROJECT GEBANG FLYOVER - CONTRACT PACKAGE 2 (NAGREG - GEBANG) WEST JAVA PROVINCE	1 : 200 1 : 100	DIMENSION PLAN OF PC SUPERSTRUCTURE P2 - P4	GCL-004
	Sign	Sign	Sign	APPROVED BY: Ir. HERRY VAZA M,Eng,Sc				SHEET NO :
	Date	Date	Date	NIP. : 110038400 — Sign / Date		FULL SIZE A3		04 / 21

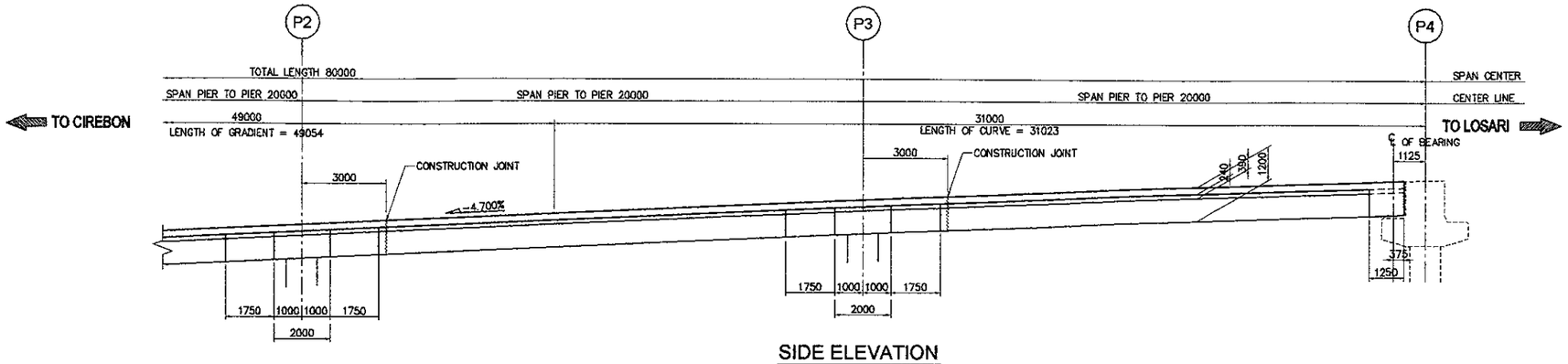

SIDE ELEVATION
SCALE 1 : 200

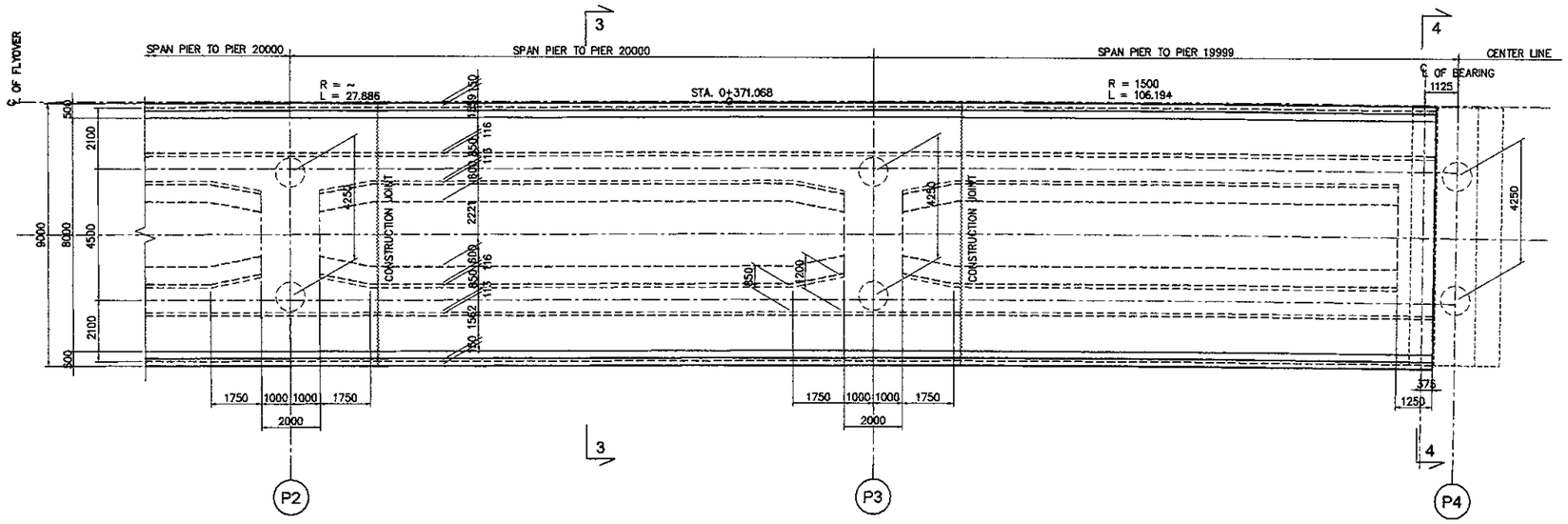

P L A N
SCALE 1 : 200

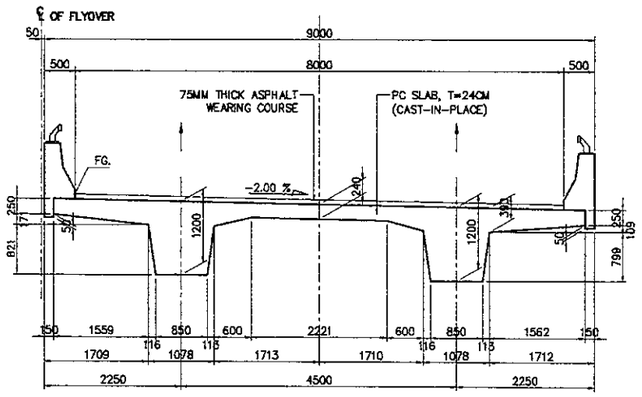

SECTION 3-3
SCALE 1 : 100

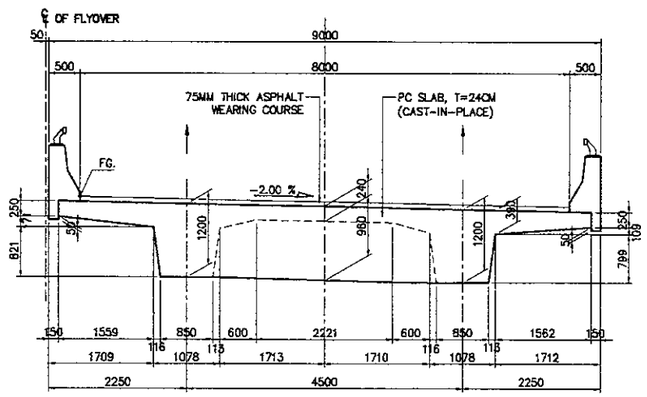

SECTION 4-4
SCALE 1 : 100

NOTES :

1. All dimension are in mm unless noted otherwise.
2. Concrete Girder and Slab fc'= 35 MPa.
3. All Reinforcing steel shall be BJTD 40 or ASTM A615 Grade 60 deformed bars.
4. The Contractor shall be responsible to carry out the following before Construction :
   a) Verification of all elevations and dimensions, using actual field survey.
   b) Preparation and submission of shop drawings for all bridge components for the Engineer's approval.

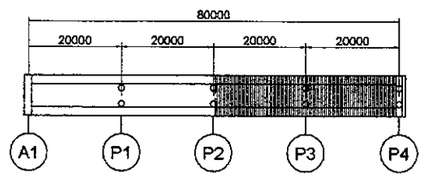

KEY PLAN

JICA JAPAN INTERNATIONAL COOPERATION AGENCY / KEI KATAHIRA & ENGINEERS INTERNATIONAL	DESIGNED BY	CHECKED BY	SUBMITTED BY	REPUBLIC OF INDONESIA MINISTRY OF PUBLIC WORKS DIRECTORATE GENERAL OF HIGHWAYS	PROJECT AND LOCATION :	SCALE :	DRAWING TITLE :	DRAWING NO :
	Name: H. HONDA	Name: T. OKUMURA	Name: M. KIUCHI		DETAILED DESIGN STUDY OF NORTH JAVA CORRIDOR FLYOVER PROJECT GEBANG FLYOVER - CONTRACT PACKAGE 2 (NAGREG - GEBANG) WEST JAVA PROVINCE	1 : 50	TYPICAL CROSS SECTION A1 - P4	GCL-005
	Sign	Sign	Sign	APPROVED BY: Ir. HERRY VAZA M,Eng.Sc				SHEET NO :
	Date	Date	Date	NIP. : 110038400 / Sign / Date		FULL SIZE A3		05 / 21

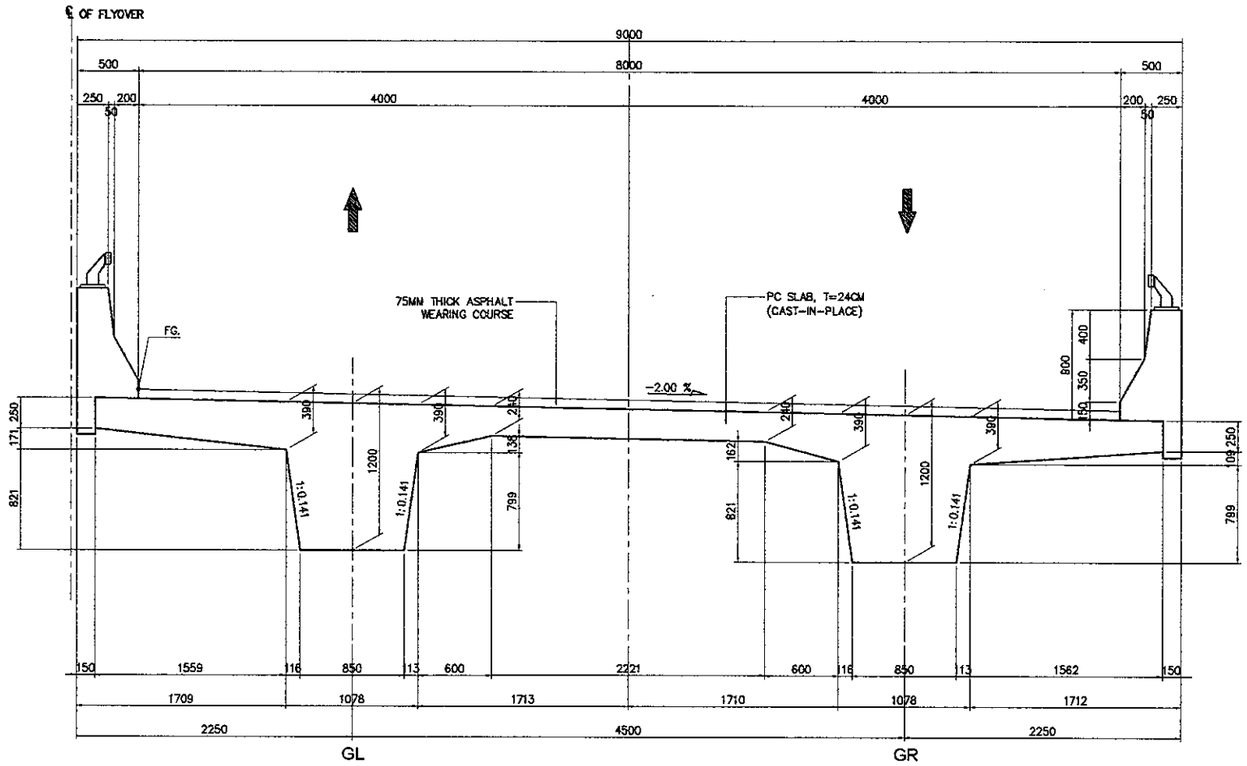

INFORMATION OF PC SUPERSTUCTURE

	A1	P1	P2	P3	P4'
FG.	8.817	9.757	10.697	11.603	12.274
Super Elev. GL	−2.000%	−2.000%	−2.000%	−2.000%	−2.000%
Super Elev. GR	2.000%	2.000%	2.000%	2.000%	2.000%
Top Slab Girder GL	8.679	9.619	10.559	11.465	12.136
Top Slab Girder GR	8.806	9.746	10.686	11.592	12.263
Bottom GL	7.004	8.344	9.284	10.190	10.861
Bottom GR	7.131	8.471	9.411	10.317	10.988
Station	0+316.00	0+336.000	0+356.000	0+376.000	0+394.875

TYPICAL CROSS SECTION
(Span Length = 20 M)

SCALE : 1 : 50

JAPAN INTERNATIONAL COOPERATION AGENCY KATAHIRA & ENGINEERS INTERNATIONAL	DESIGNED BY	CHECKED BY	SUBMITTED BY	REPUBLIC OF INDONESIA MINISTRY OF PUBLIC WORKS DIRECTORATE GENERAL OF HIGHWAYS	PROJECT AND LOCATION :	SCALE :	DRAWING TITLE :	DRAWING NO :
	Name: H. HONDA	Name: T. OKUMURA	Name: M. KIUCHI		DETAILED DESIGN STUDY OF NORTH JAVA CORRIDOR FLYOVER PROJECT GEBANG FLYOVER - CONTRACT PACKAGE 2 (NAGREG - GEBANG) WEST JAVA PROVINCE	1 : 200 1 : 100	ARRANGEMENT OF PC CABLES A1-P2	GCL-006
	Sign	Sign	Sign	APPROVED BY: Ir. HERRY VAZA M,Eng.Sc NIP. : 110038400 — Sign				SHEET NO : 06 / 21
	Date	Date	Date	Date		FULL SIZE A3		

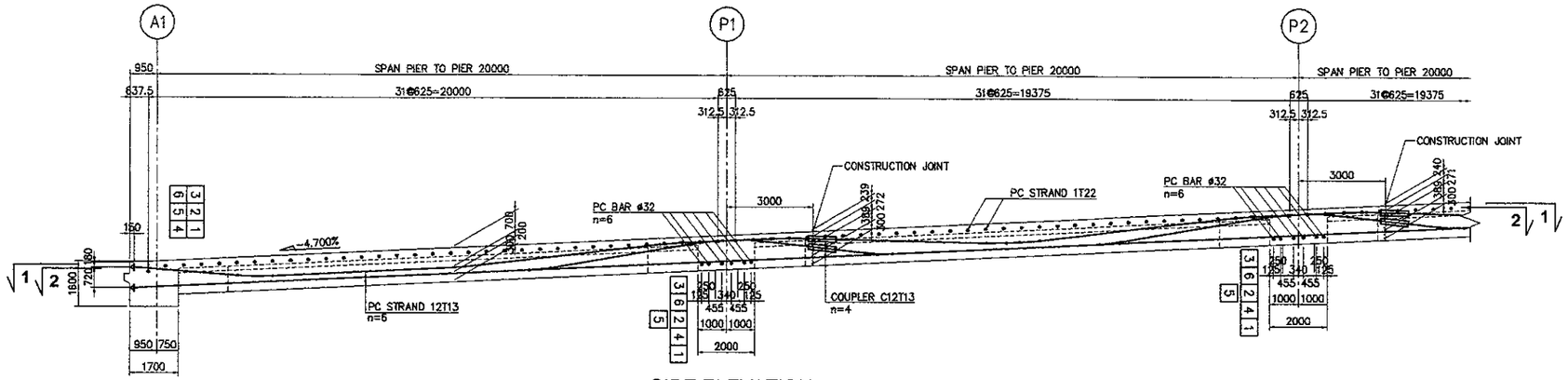

SIDE ELEVATION
SCALE 1 : 200

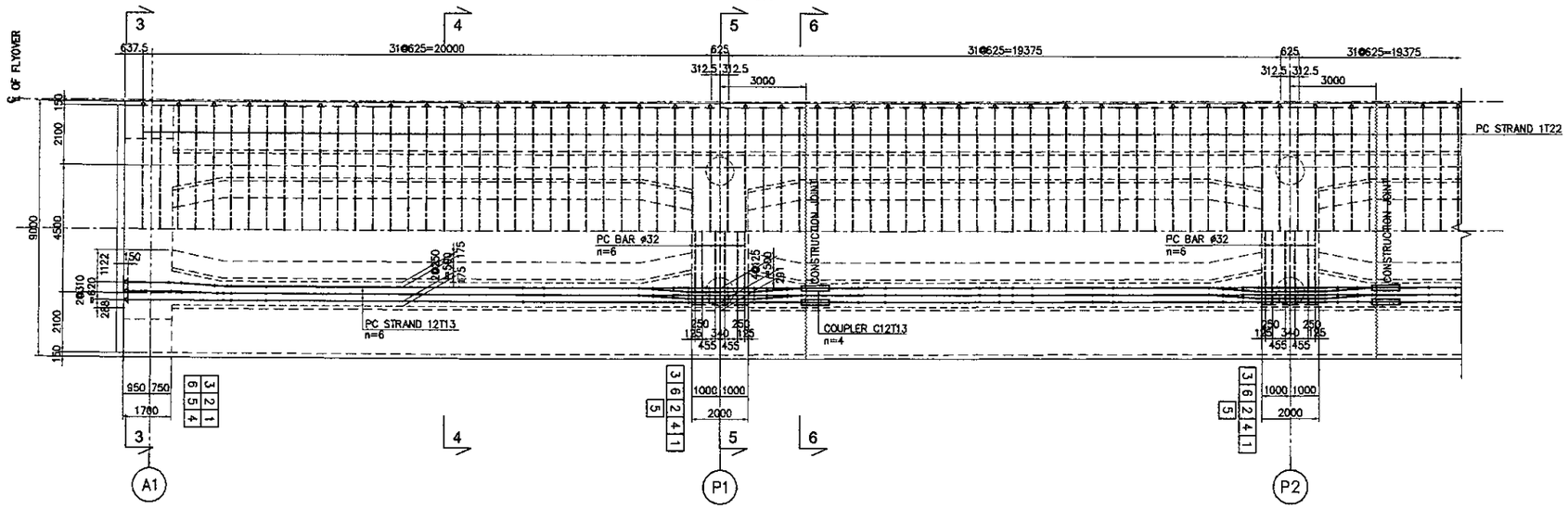

SECTION 1-1
SCALE 1 : 200

SECTION 2-2
SCALE 1 : 200

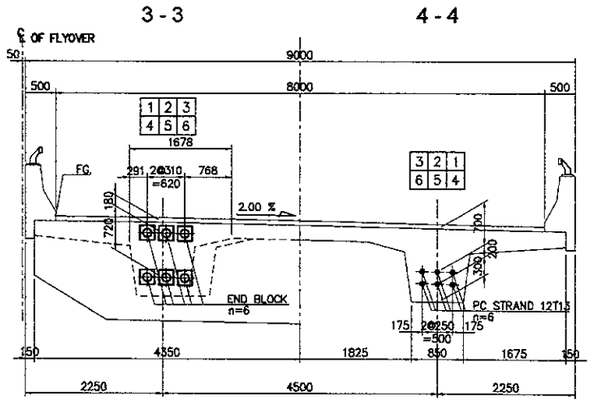

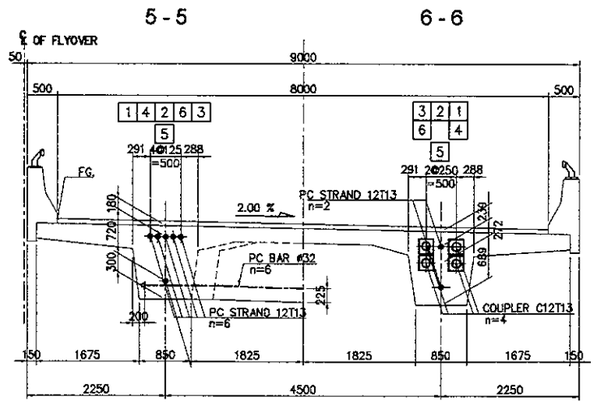

CROSS SECTION
SCALE 1 : 100

NOTES :
1. All dimension are in mm unless noted otherwise.
2. Prestressing Tendon Shall be 12T13 (7 WIRE STRAND).
   Nominal Diameter 12.7mm.
3. Shows Bending Point Of Prestressing Cable.

Stressing Anchorage
Dead End Anchorage

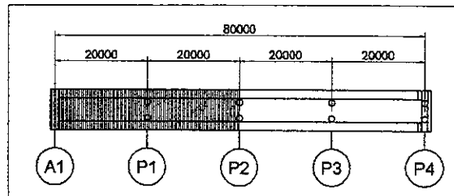

KEY PLAN

JICA JAPAN INTERNATIONAL COOPERATION AGENCY / KEI KATAHIRA & ENGINEERS INTERNATIONAL	DESIGNED BY	CHECKED BY	SUBMITTED BY	REPUBLIC OF INDONESIA MINISTRY OF PUBLIC WORKS DIRECTORATE GENERAL OF HIGHWAYS	PROJECT AND LOCATION :	SCALE :	DRAWING TITLE :	DRAWING NO :
	Name: H. HONDA	Name: T. OKUMURA	Name: M. KIUCHI		DETAILED DESIGN STUDY OF NORTH JAVA CORRIDOR FLYOVER PROJECT GEBANG FLYOVER - CONTRACT PACKAGE 2 (NAGREG - GEBANG) WEST JAVA PROVINCE	1 : 200 / 1 : 100	ARRANGEMENT OF PC CABLES P2-P4	GCL-007
	Sign	Sign	Sign	APPROVED BY: Ir. HERRY VAZA M,Eng.Sc — NIP. : 110038400 — Sign		FULL SIZE A3		SHEET NO : 07 / 21
	Date	Date	Date	Date				

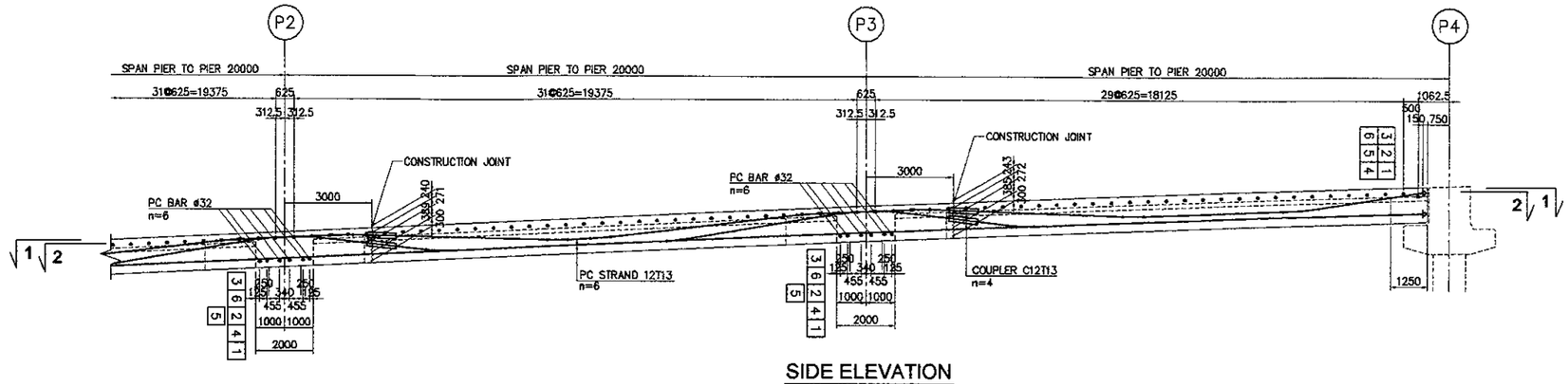

SIDE ELEVATION

SCALE 1 : 200

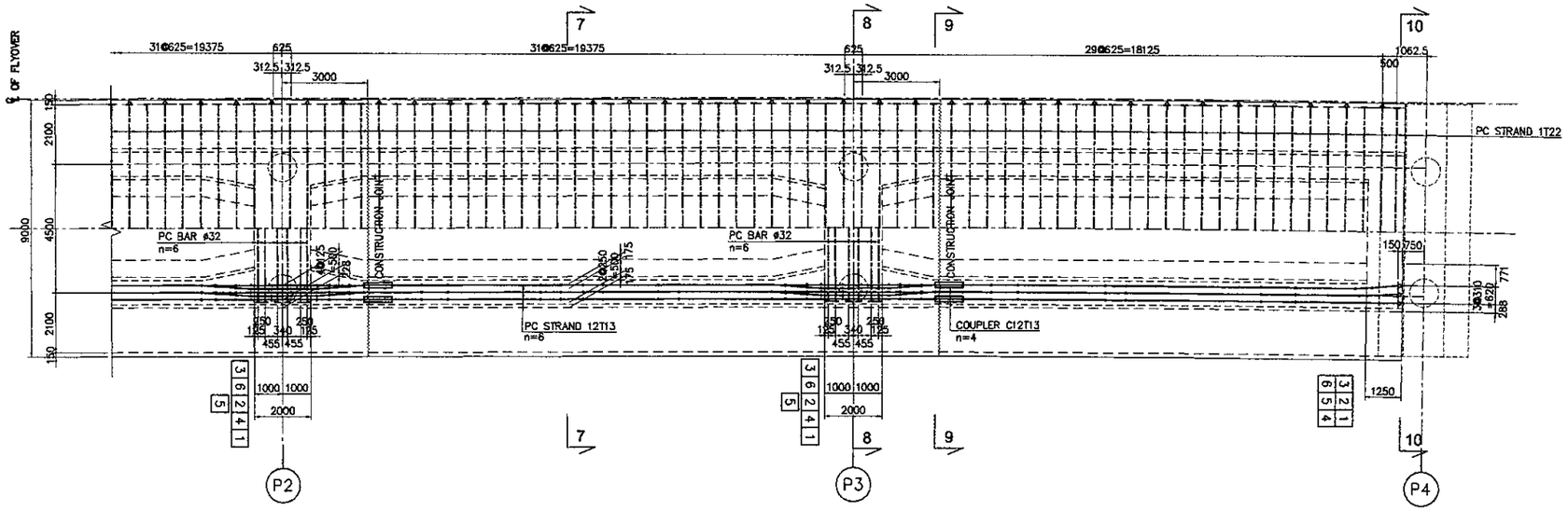

SECTION 1-1

SCALE 1 : 200

SECTION 2-2

SCALE 1 : 200

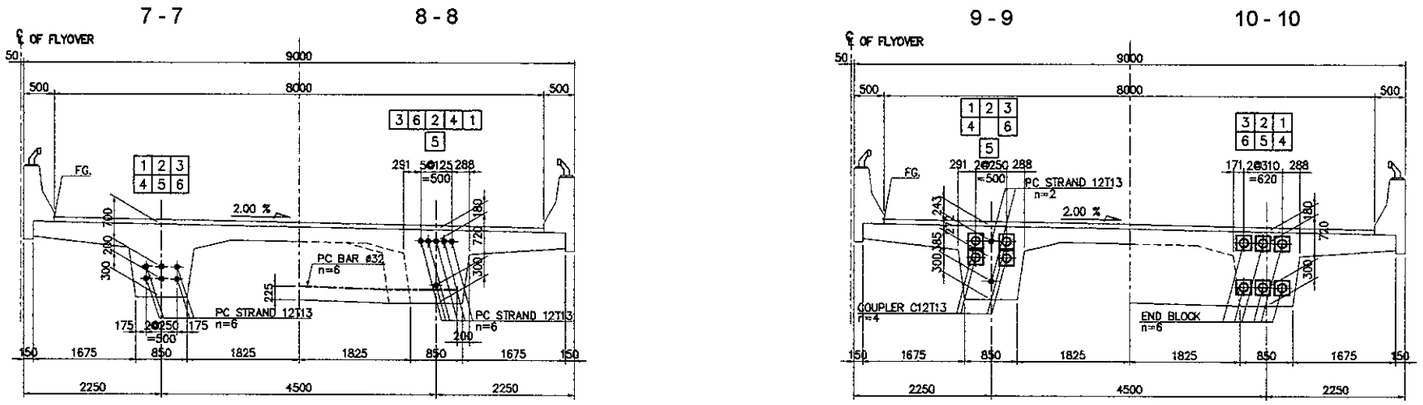

CROSS SECTION

SCALE 1 : 100

NOTES :

1. All dimension are in mm unless noted otherwise.
2. Prestressing Tendon Shall be 12T13 (7 WIRE STRAND).
   . Nominal Diameter 12.7mm.
3. Shows Bending Point Of Prestressing Cable.

Stressing Anchorage

Dead End Anchorage

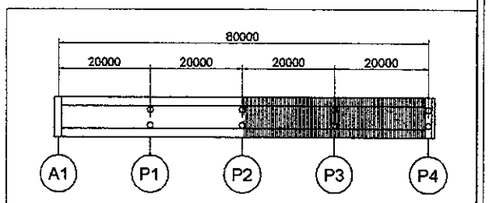

KEY PLAN

JICA JAPAN INTERNATIONAL COOPERATION AGENCY / KEI KATAHIRA & ENGINEERS INTERNATIONAL	DESIGNED BY	CHECKED BY	SUBMITTED BY	REPUBLIC OF INDONESIA MINISTRY OF PUBLIC WORKS DIRECTORATE GENERAL OF HIGHWAYS	PROJECT AND LOCATION :	SCALE :	DRAWING TITLE :	DRAWING NO :
	Name: H. HONDA	Name: T. OKUMURA	Name: M. KIUCHI		DETAILED DESIGN STUDY OF NORTH JAVA CORRIDOR FLYOVER PROJECT GEBANG FLYOVER - CONTRACT PACKAGE 2 (NAGREG - GEBANG) WEST JAVA PROVINCE	1 : 50 / 1 : 300	ARRANGEMENT OF PC CABLES A1-P4	GCL-008
	Sign	Sign	Sign	APPROVED BY: Ir. HERRY VAZA M,Eng.Sc				SHEET NO :
	Date	Date	Date	NIP. : 110038400 — Sign / Date		FULL SIZE A3		08 / 21

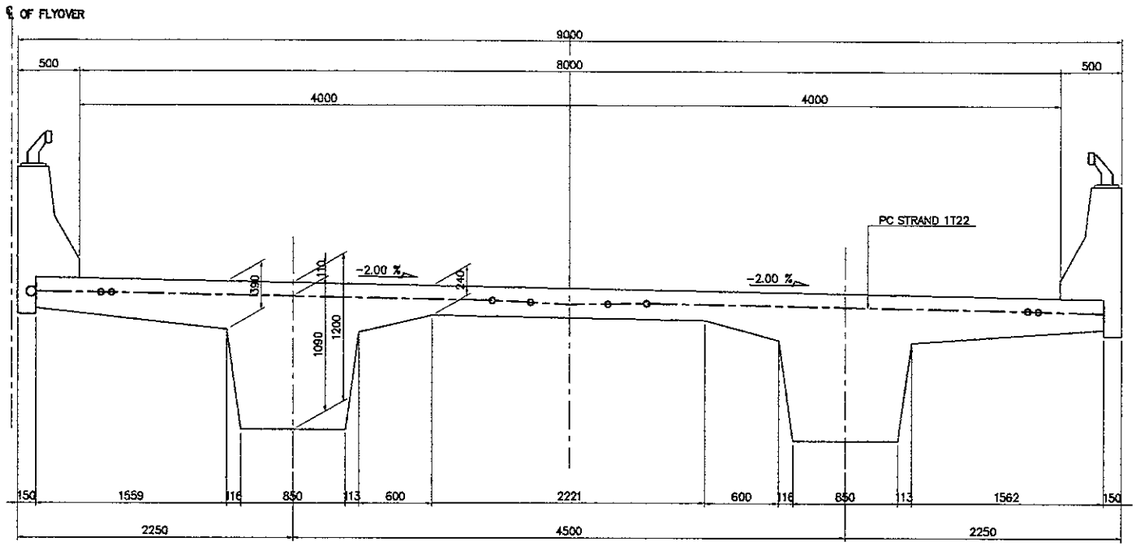

TRANVERSAL PC CABLE

SCALE 1 : 50

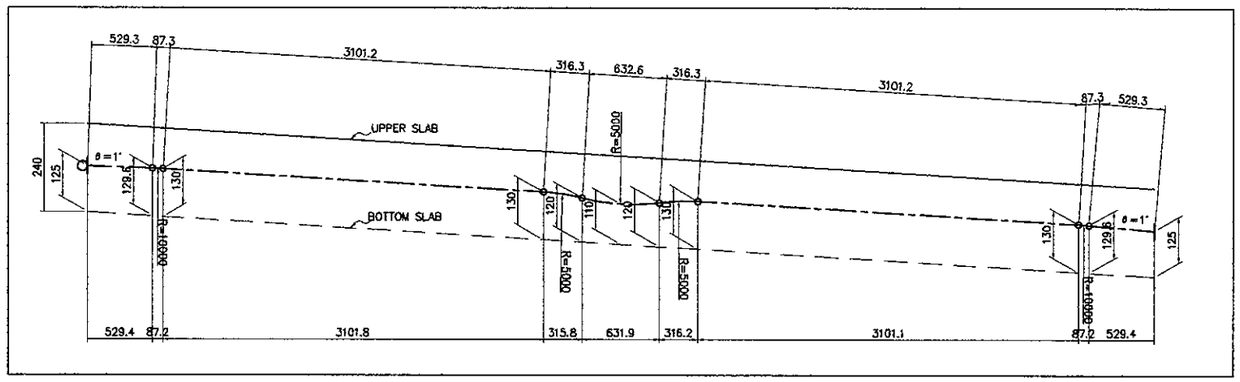

PC CABLE PROFILE

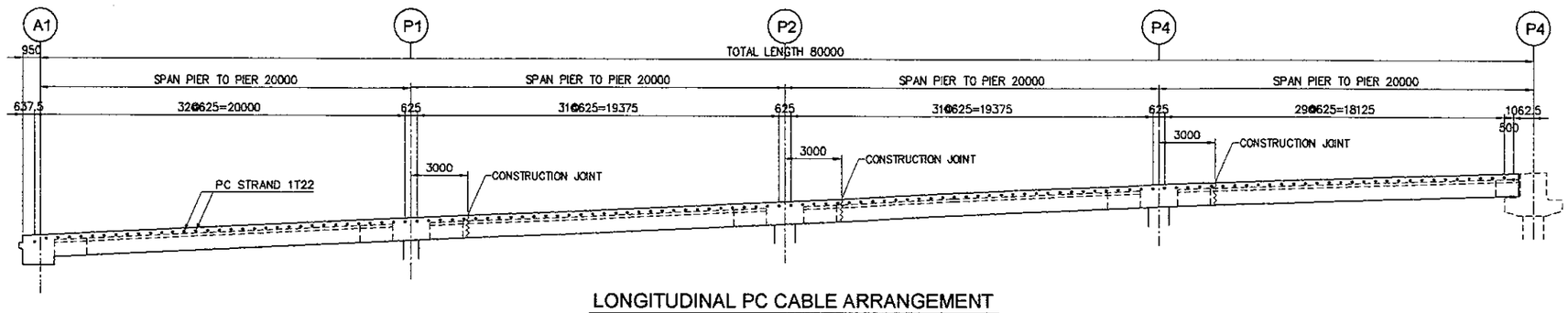

LONGITUDINAL PC CABLE ARRANGEMENT

SCALE 1 : 300

TABEL OF PC CABLES

Length (m)	Nos.	Unit Weight (kg/m)	Weight / 1 nos (kg)	Weight (kg)	Remarks
8.700	128	2.482	21.59	2,763.96	Stressing Anchorage One Side Staggered
TOTAL LENGTH (L) =			1,113.60	m	
TOTAL WEIGHT (W) =			2,763.96	kg	

NOTES :

1. All dimension are in mm unless noted otherwise.
2. Shows Bending Point Of Prestressing Cable.

Stressing Anchorage

Dead End Anchorage

JAPAN INTERNATIONAL COOPERATION AGENCY KATAHIRA & ENGINEERS INTERNATIONAL	DESIGNED BY	CHECKED BY	SUBMITTED BY	REPUBLIC OF INDONESIA MINISTRY OF PUBLIC WORKS DIRECTORATE GENERAL OF HIGHWAYS	PROJECT AND LOCATION :	SCALE :	DRAWING TITLE :	DRAWING NO :
	Name: H. HONDA	Name: T. OKUMURA	Name: M. KIUCHI		DETAILED DESIGN STUDY OF NORTH JAVA CORRIDOR FLYOVER PROJECT GEBANG FLYOVER - CONTRACT PACKAGE 2 (NAGREG - GEBANG) WEST JAVA PROVINCE	-	PC CABLES SCHEDULE A1 - P4	GCL-009
	Sign	Sign	Sign	APPROVED BY: Ir. HERRY VAZA M,Eng.Sc NIP. : 110038400				SHEET NO :
	Date	Date	Date	Sign / Date		FULL SIZE A3		09 / 21

CONSTRUCTION SECTION NO.1 (C1 & C3)

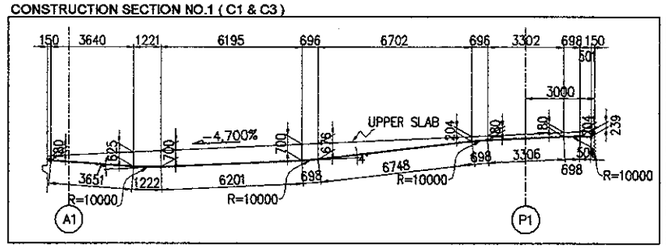

CONSTRUCTION SECTION NO.2 (C1 & C3)

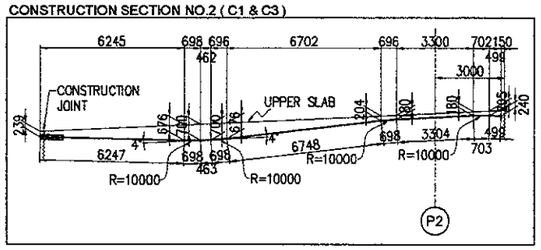

CONSTRUCTION SECTION NO.3 (C1 & C3)

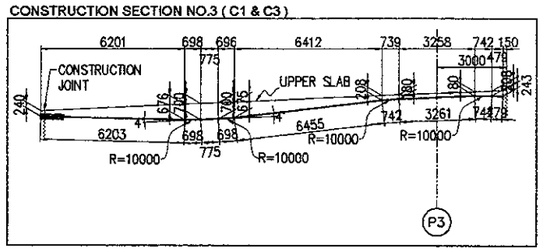

CONSTRUCTION SECTION NO.4 (C1 & C3)

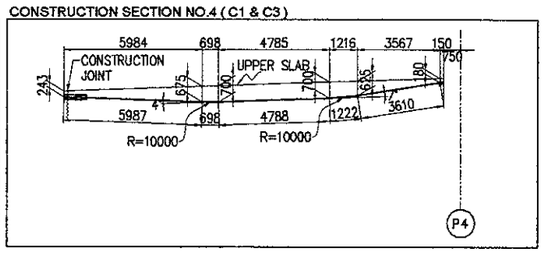

AFTER COMPLETION GIRDER (C2)

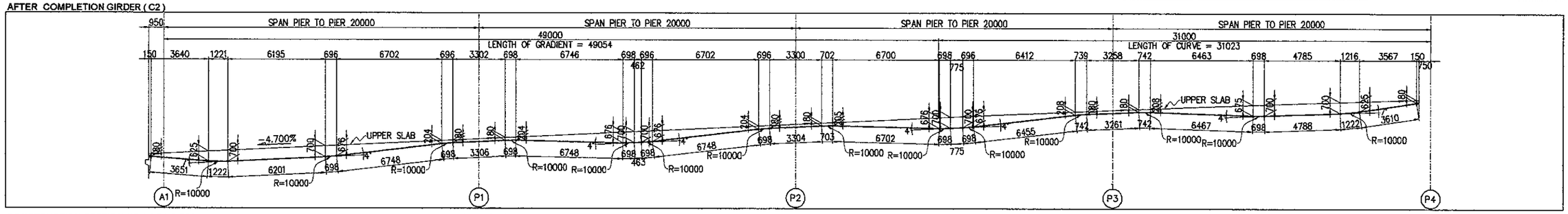

CONSTRUCTION SECTION NO.1 (C4 & C6)

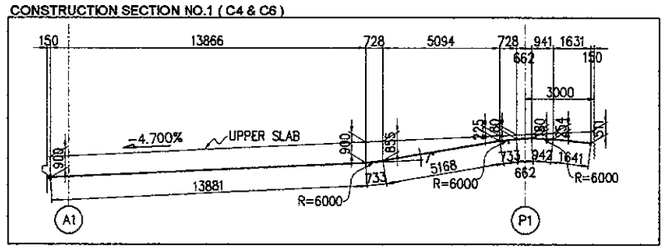

CONSTRUCTION SECTION NO.2 (C4 & C6)

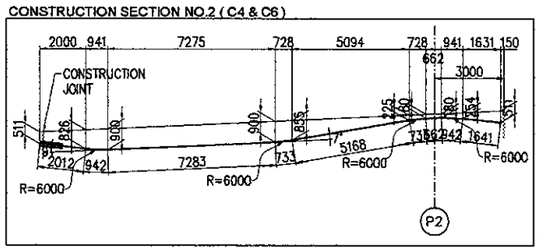

CONSTRUCTION SECTION NO.3 (C4 & C6)

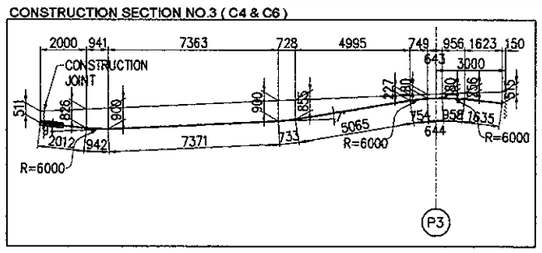

CONSTRUCTION SECTION NO.4 (C4 & C6)

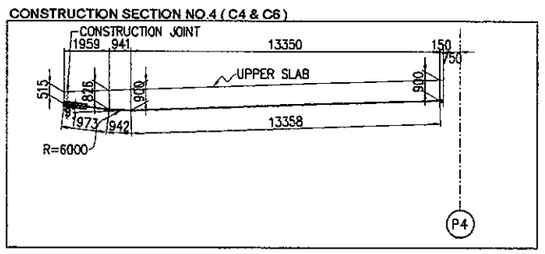

AFTER COMPLETION GIRDER (C5)

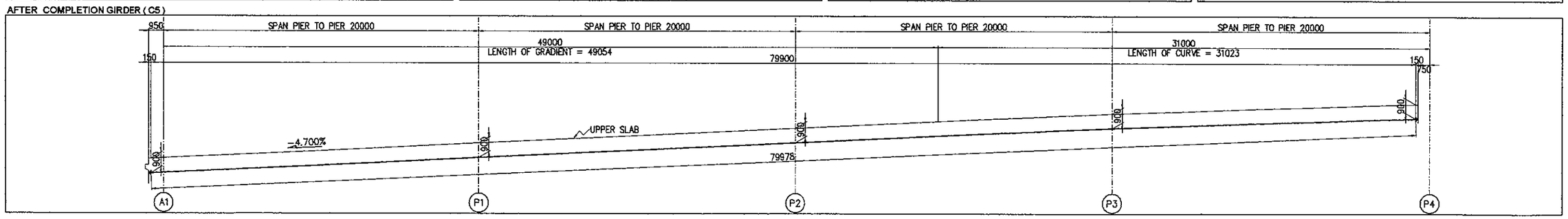

PC TENDONS SCHEDULE A1 - P4

SCALE : NON

NOTES :

1. All dimension are in mm unless noted otherwise
2. Prestressing Tendon Shall be 12T13 (7 WIRE STRAND)
   . Nominal Diameter 12.7mm
3. Shows Bending Point Of Prestressing Cable

Stressing Anchorage

Dead End Anchorage

JAPAN INTERNATIONAL COOPERATION AGENCY / KATAHIRA & ENGINEERS INTERNATIONAL	DESIGNED BY	CHECKED BY	SUBMITTED BY	REPUBLIC OF INDONESIA MINISTRY OF PUBLIC WORKS DIRECTORATE GENERAL OF HIGHWAYS	PROJECT AND LOCATION :	SCALE :	DRAWING TITLE :	DRAWING NO :
	Name: H. HONDA	Name: T. OKUMURA	Name: M. KIUCHI		DETAILED DESIGN STUDY OF NORTH JAVA CORRIDOR FLYOVER PROJECT GEBANG FLYOVER - CONTRACT PACKAGE 2 (NAGREG - GEBANG) WEST JAVA PROVINCE	1 : 30	TYPICAL DETAIL OF CROSS SECTION REINFORCEMENT A1-P4	GCL-010
	Sign	Sign	Sign	APPROVED BY: Ir. HERRY VAZA M,Eng.Sc NIP. : 110038400		FULL SIZE A3		SHEET NO : 10 / 21
	Date	Date	Date	Sign / Date				

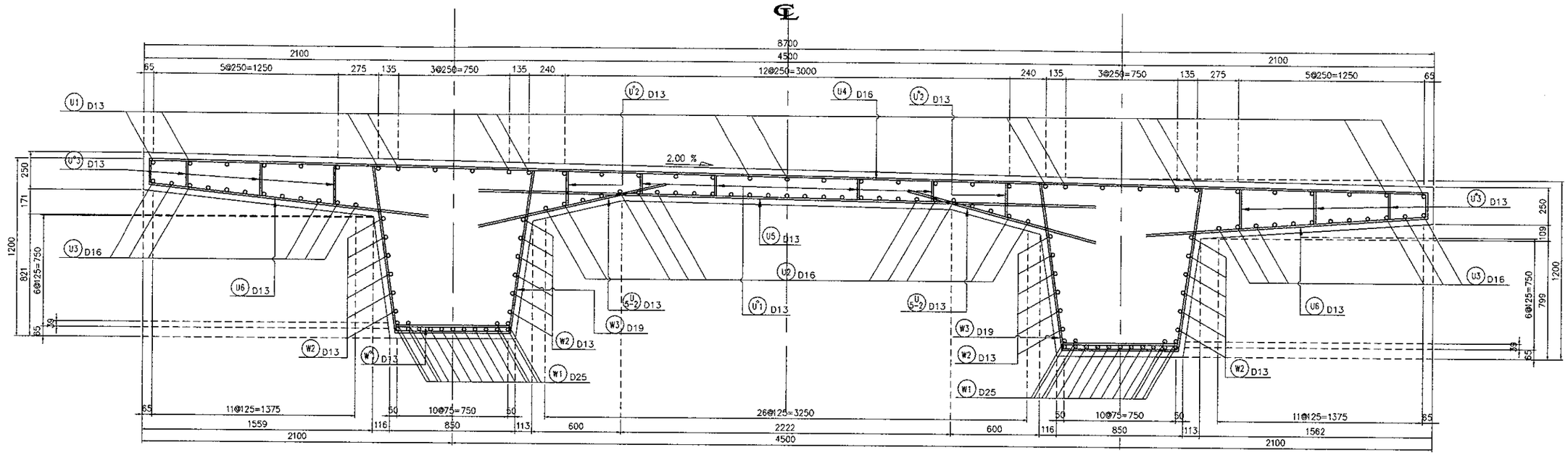

SECTION AT MID SPAN

SCALE 1:30

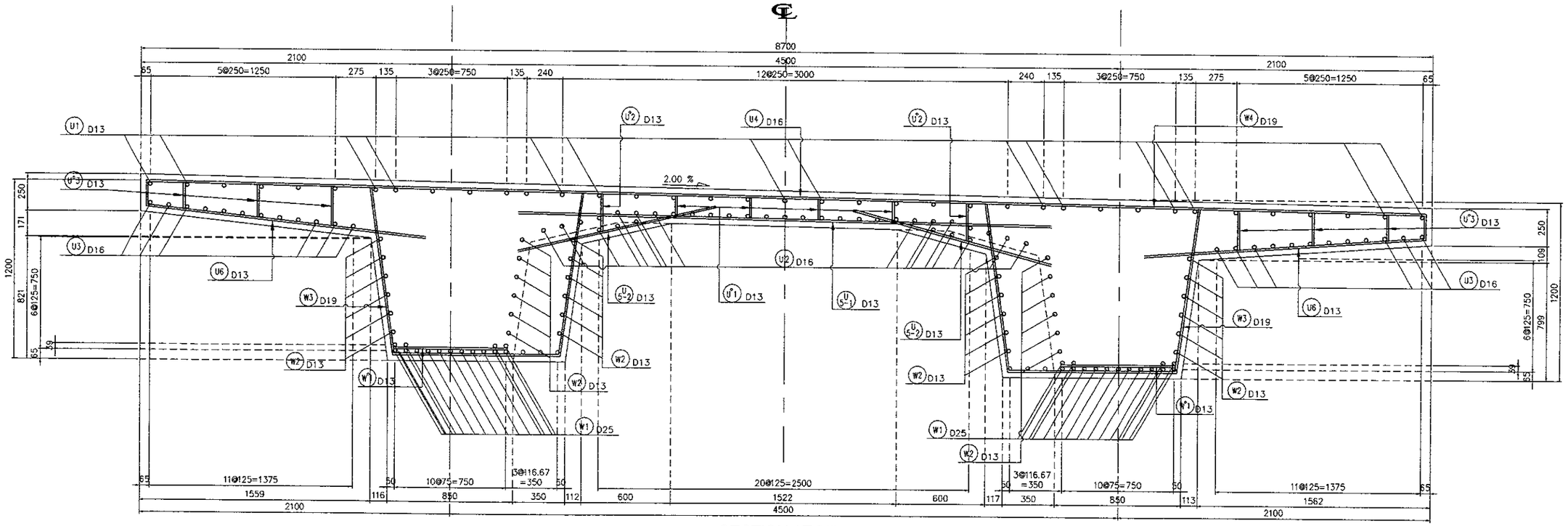

SECTION AT PIER

SCALE 1:30