JAPAN INTERNATIONAL COOPERATION AGENCY / KATAHIRA & ENGINEERS INTERNATIONAL	DESIGNED BY	CHECKED BY	SUBMITTED BY	REPUBLIC OF INDONESIA MINISTRY OF PUBLIC WORKS DIRECTORATE GENERAL OF HIGHWAYS	PROJECT AND LOCATION :	SCALE :	DRAWING TITLE :	DRAWING NO :
	Name: R. UENO	Name: T. OKUMURA	Name: M. KIUCHI		DETAILED DESIGN STUDY OF NORTH JAVA CORRIDOR FLYOVER PROJECT GEBANG FLYOVER - CONTRACT PACKAGE 2 (NAGREG - GEBANG) WEST JAVA PROVINCE	1 : 100	ABUTMENT AND PIER SECTIONS SHOWING DOWNSPOUT PIPE 8 OF 17	GDV-021
	Sign	Sign	Sign	APPROVED BY: Ir. HERRY VAZA M,Eng.Sc NIP. : 110038400				SHEET NO :
	Date	Date	Date	Sign / Date		FULL SIZE A3		21 / 43

i (%)	io (%)
1	6
2	7
3	8
4	9
5	10

DETAIL OF OUTER DITCH
SCALE 1:300

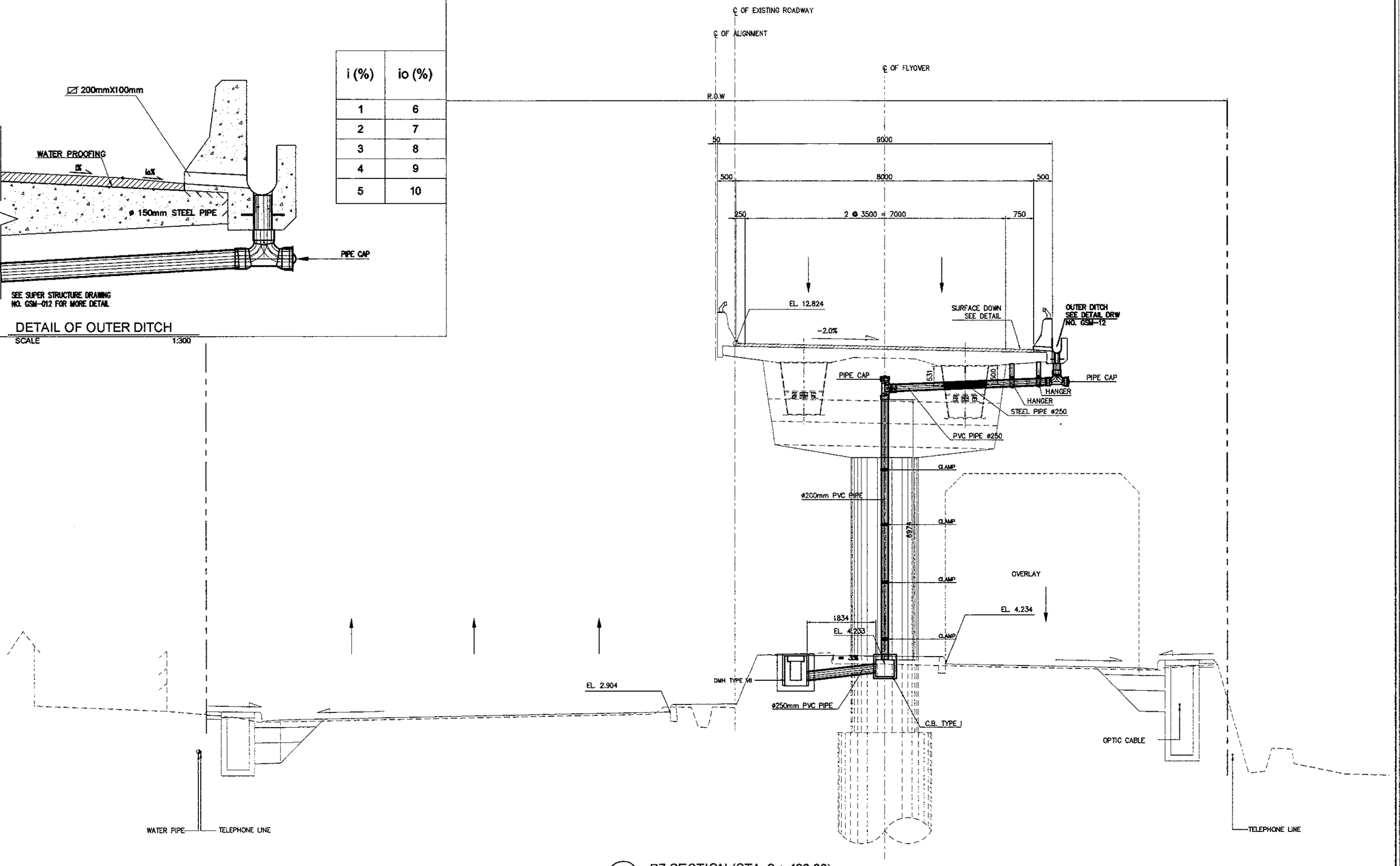

1 / - P7 SECTION (STA. 0 + 486.00)
1:100

PRINTED: OCT. 19, 2006

JAPAN INTERNATIONAL COOPERATION AGENCY / KATAHIRA & ENGINEERS INTERNATIONAL	DESIGNED BY	CHECKED BY	SUBMITTED BY	REPUBLIC OF INDONESIA MINISTRY OF PUBLIC WORKS DIRECTORATE GENERAL OF HIGHWAYS	PROJECT AND LOCATION :	SCALE :	DRAWING TITLE :	DRAWING NO :
	Name: R. UENO	Name: T. OKUMURA	Name: M. KIUCHI		DETAILED DESIGN STUDY OF NORTH JAVA CORRIDOR FLYOVER PROJECT GEBANG FLYOVER - CONTRACT PACKAGE 2 (NAGREG - GEBANG) WEST JAVA PROVINCE	1 : 100	ABUTMENT AND PIER SECTIONS SHOWING DOWNSPOUT PIPE 9 OF 17	GDV-022
	Sign	Sign	Sign	APPROVED BY: Ir. HERRY VAZA M,Eng.Sc NIP. : 110038400 — Sign				SHEET NO :
	Date	Date	Date	Date		FULL SIZE A3		22 / 43

i (%)	io (%)
1	6
2	7
3	8
4	9
5	10

DETAIL OF OUTER DITCH
SCALE 1:300

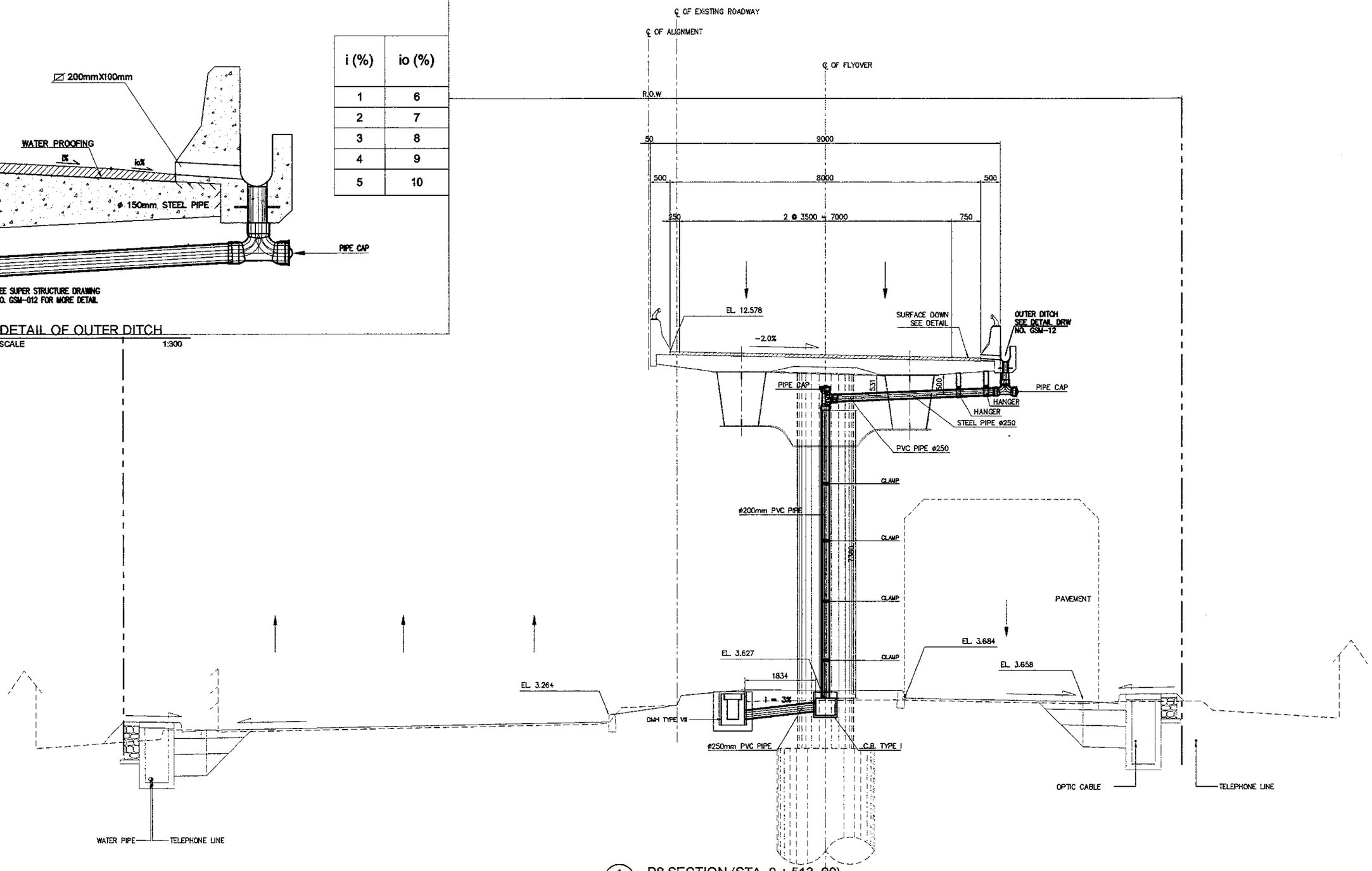

1 / - P8 SECTION (STA. 0 + 513. 00)
SCALE 1:100

PRINTED: OCT. 19, 2006

JAPAN INTERNATIONAL COOPERATION AGENCY KATAHIRA & ENGINEERS INTERNATIONAL	DESIGNED BY	CHECKED BY	SUBMITTED BY	REPUBLIC OF INDONESIA MINISTRY OF PUBLIC WORKS DIRECTORATE GENERAL OF HIGHWAYS	PROJECT AND LOCATION :	SCALE :	DRAWING TITLE :	DRAWING NO :
	Name: R. UENO	Name: T. OKUMURA	Name: M. KIUCHI		DETAILED DESIGN STUDY OF NORTH JAVA CORRIDOR FLYOVER PROJECT GEBANG FLYOVER - CONTRACT PACKAGE 2 (NAGREG - GEBANG) WEST JAVA PROVINCE	1 : 100	ABUTMENT AND PIER SECTIONS SHOWING DOWNSPOUT PIPE 10 OF 17	GDV-023
	Sign	Sign	Sign	APPROVED BY: Ir. HERRY VAZA M.Eng.Sc NIP. : 110038400				SHEET NO :
	Date	Date	Date	Sign / Date		FULL SIZE A3		23 / 43

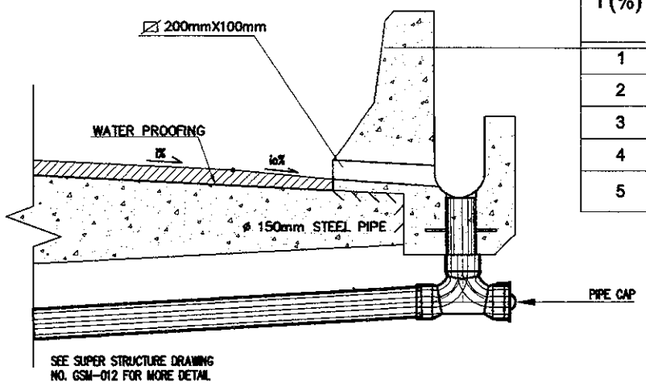

i (%)	io (%)
1	6
2	7
3	8
4	9
5	10

DETAIL OF OUTER DITCH
SCALE 1:300

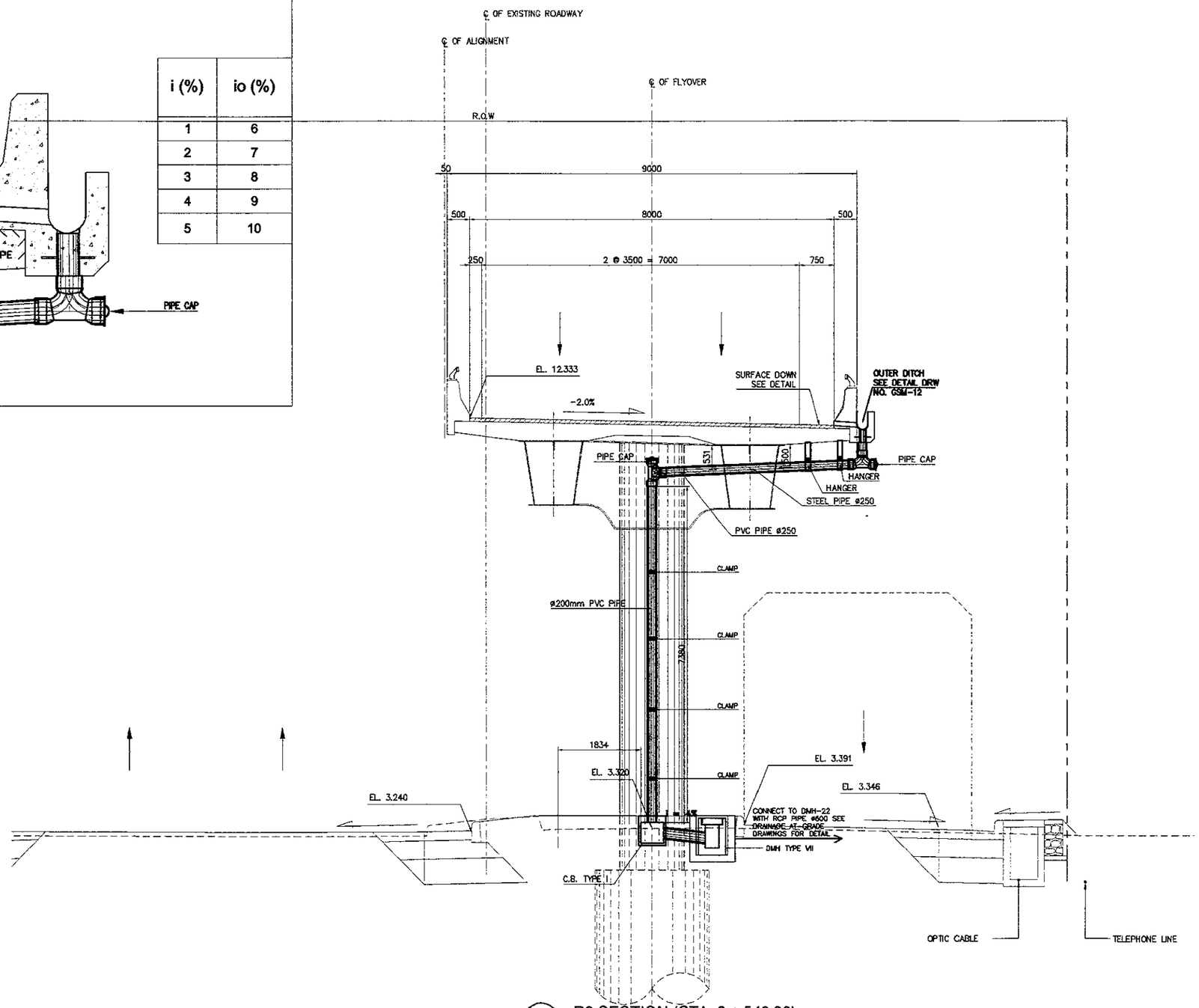

1 / - P9 SECTION (STA. 0 + 540.00)
SCALE 1:100

PRINTED: OCT. 19, 2006

JAPAN INTERNATIONAL COOPERATION AGENCY KATAHIRA & ENGINEERS INTERNATIONAL	DESIGNED BY	CHECKED BY	SUBMITTED BY	REPUBLIC OF INDONESIA MINISTRY OF PUBLIC WORKS DIRECTORATE GENERAL OF HIGHWAYS	PROJECT AND LOCATION :	SCALE :	DRAWING TITLE :	DRAWING NO :
	Name: R. UENO	Name: T. OKUMURA	Name: M. KIUCHI		DETAILED DESIGN STUDY OF NORTH JAVA CORRIDOR FLYOVER PROJECT GEBANG FLYOVER - CONTRACT PACKAGE 2 (NAGREG - GEBANG) WEST JAVA PROVINCE	1 : 100	ABUTMENT AND PIER SECTIONS SHOWING DOWNSPOUT PIPE 11 OF 17	GDV-024
	Sign	Sign	Sign	APPROVED BY: Ir. HERRY VAZA M,Eng.Sc NIP. : 110038400				SHEET NO :
	Date	Date	Date	Sign / Date		FULL SIZE A3		24 / 43

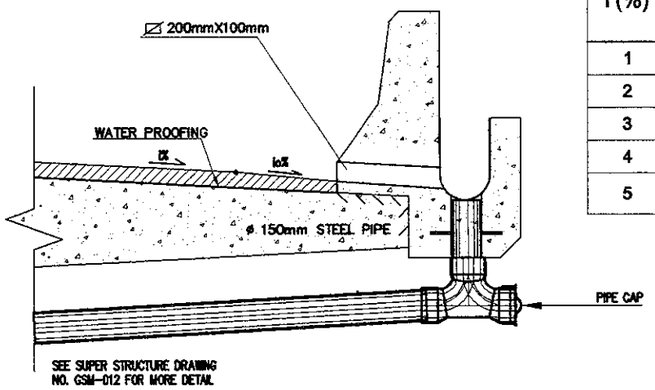

i (%)	io (%)
1	6
2	7
3	8
4	9
5	10

DETAIL OF OUTER DITCH
SCALE 1:300

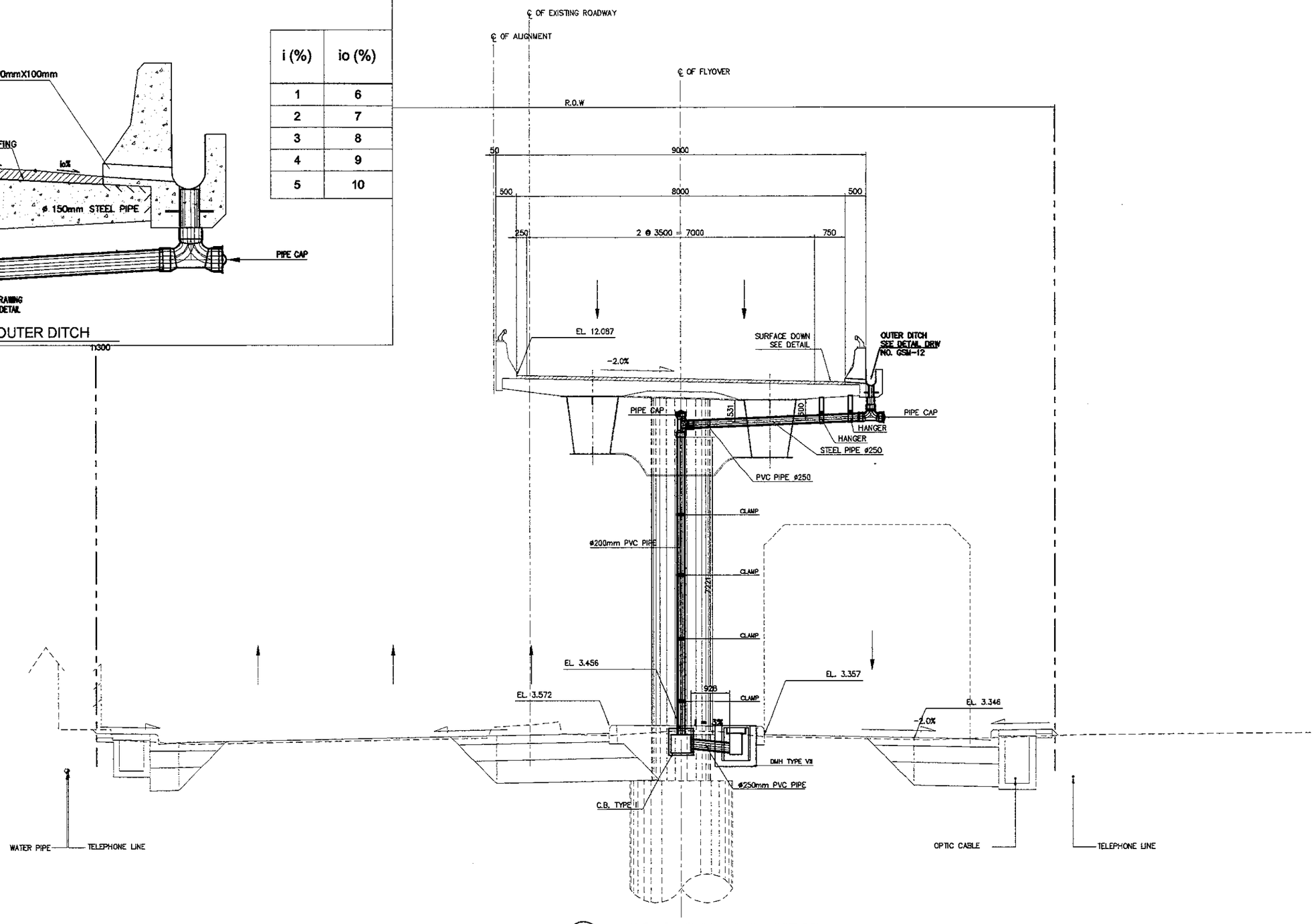

1 / - P10 SECTION (STA. 0 + 567.00)
SCALE 1:100

PRINTED: OCT. 19, 2006

JICA JAPAN INTERNATIONAL COOPERATION AGENCY / KEI KATAHIRA & ENGINEERS INTERNATIONAL	DESIGNED BY	CHECKED BY	SUBMITTED BY	REPUBLIC OF INDONESIA MINISTRY OF PUBLIC WORKS DIRECTORATE GENERAL OF HIGHWAYS	PROJECT AND LOCATION :	SCALE :	DRAWING TITLE :	DRAWING NO :
	Name: R. UENO	Name: T. OKUMURA	Name: M. KIUCHI		DETAILED DESIGN STUDY OF NORTH JAVA CORRIDOR FLYOVER PROJECT GEBANG FLYOVER - CONTRACT PACKAGE 2 (NAGREG - GEBANG) WEST JAVA PROVINCE	1 : 100	ABUTMENT AND PIER SECTIONS SHOWING DOWNSPOUT PIPE 12 OF 17	GDV-025
	Sign	Sign	Sign	APPROVED BY: Ir. HERRY VAZA M,Eng.Sc NIP. : 110038400				SHEET NO : 25 / 43
	Date	Date	Date	Sign / Date		FULL SIZE A3		

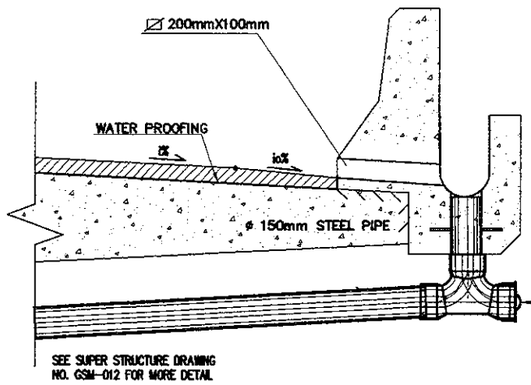

i (%)	io (%)
1	6
2	7
3	8
4	9
5	10

DETAIL OF OUTER DITCH
SCALE 1:300

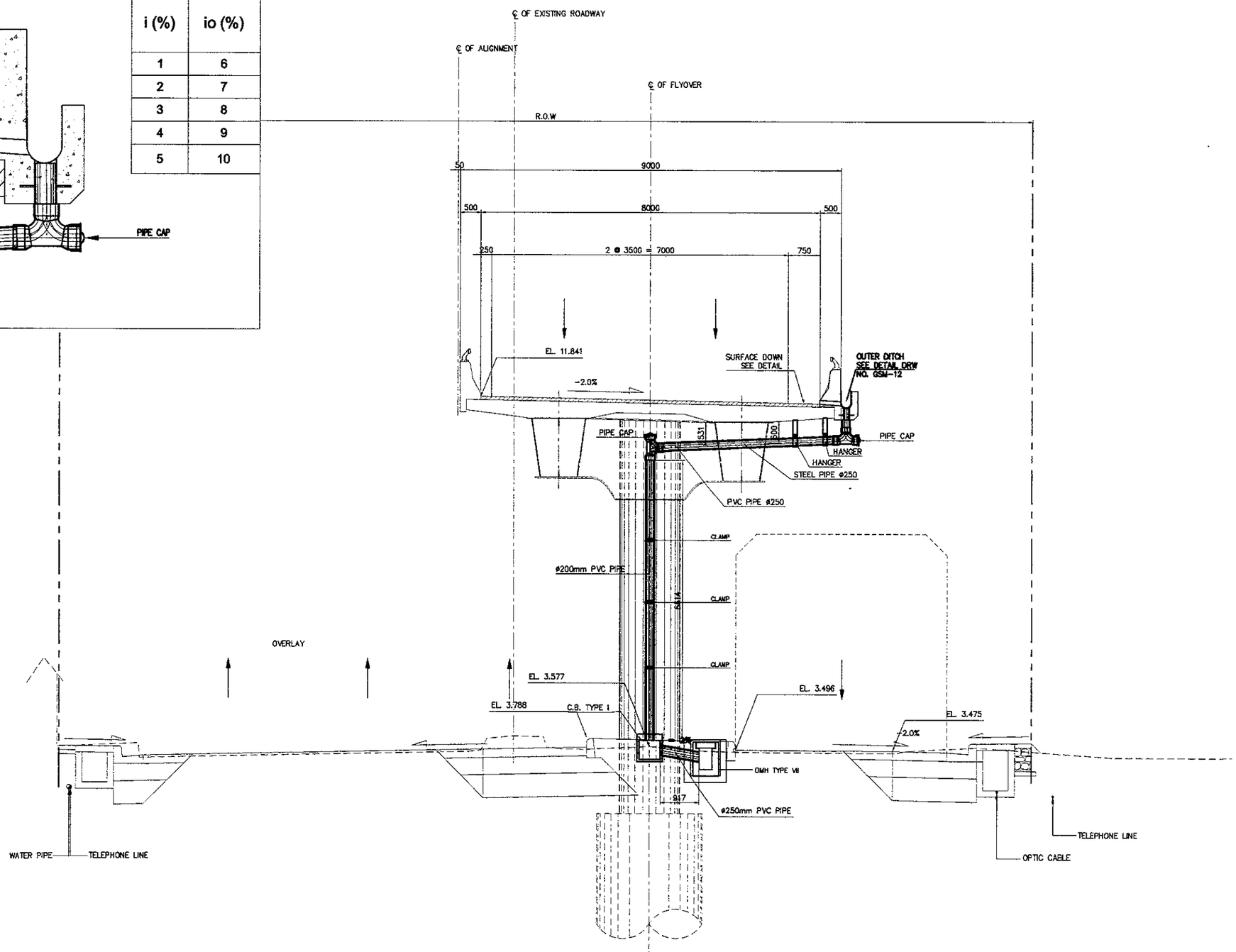

1 / - P11 SECTION (STA. 0 + 594.00)
SCALE 1:100

PRINTED: OCT. 19, 2006

JICA JAPAN INTERNATIONAL COOPERATION AGENCY / KEI KATAHIRA & ENGINEERS INTERNATIONAL	DESIGNED BY	CHECKED BY	SUBMITTED BY	REPUBLIC OF INDONESIA MINISTRY OF PUBLIC WORKS DIRECTORATE GENERAL OF HIGHWAYS	PROJECT AND LOCATION :	SCALE :	DRAWING TITLE :	DRAWING NO :
	Name: R. UENO	Name: T. OKUMURA	Name: M. KIUCHI		DETAILED DESIGN STUDY OF NORTH JAVA CORRIDOR FLYOVER PROJECT GEBANG FLYOVER - CONTRACT PACKAGE 2 (NAGREG - GEBANG) WEST JAVA PROVINCE	1 : 100	ABUTMENT AND PIER SECTIONS SHOWING DOWNSPOUT PIPE 13 OF 17	GDV-026
	Sign	Sign	Sign	APPROVED BY: Ir. HERRY VAZA M,Eng,Sc NIP. : 110038400				SHEET NO : 26 / 43
	Date	Date	Date	Sign / Date		FULL SIZE A3		

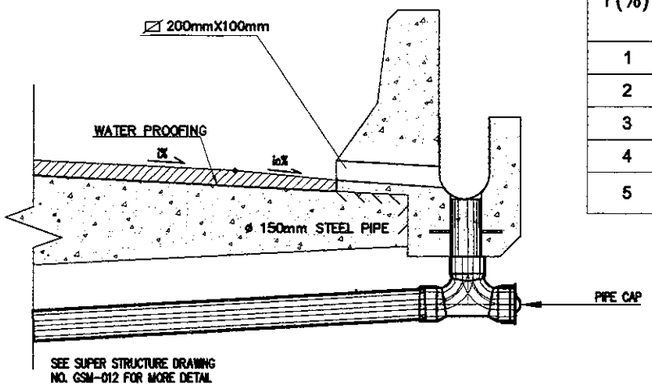

i (%)	io (%)
1	6
2	7
3	8
4	9
5	10

DETAIL OF OUTER DITCH

SCALE 1:300

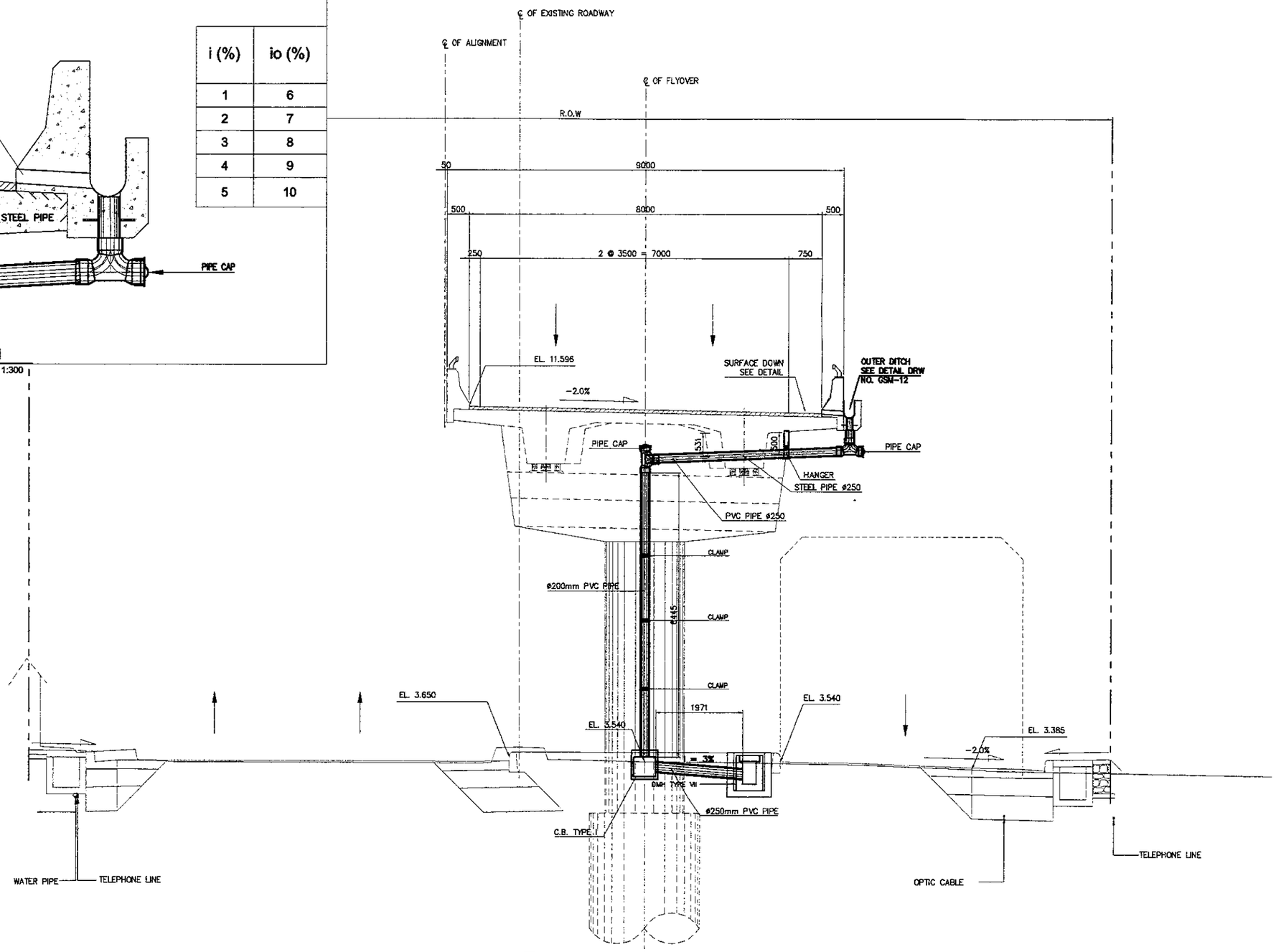

1 / - P12 SECTION (STA. 0 + 621.00)

SCALE 1:100

PRINTED: OCT. 19, 2006

JAPAN INTERNATIONAL COOPERATION AGENCY KATAHIRA & ENGINEERS INTERNATIONAL	DESIGNED BY	CHECKED BY	SUBMITTED BY	REPUBLIC OF INDONESIA MINISTRY OF PUBLIC WORKS DIRECTORATE GENERAL OF HIGHWAYS	PROJECT AND LOCATION :	SCALE :	DRAWING TITLE :	DRAWING NO :
	Name: R. UENO	Name: T. OKUMURA	Name: M. KIUCHI		DETAILED DESIGN STUDY OF NORTH JAVA CORRIDOR FLYOVER PROJECT GEBANG FLYOVER - CONTRACT PACKAGE 2 (NAGREG - GEBANG) WEST JAVA PROVINCE	1 : 100	ABUTMENT AND PIER SECTIONS SHOWING DOWNSPOUT PIPE 14 OF 17	GDV-027
	Sign	Sign	Sign	APPROVED BY: Ir. HERRY VAZA M,Eng.Sc NIP. : 110038400		FULL SIZE A3		SHEET NO : 27 / 43
	Date	Date	Date	Sign / Date				

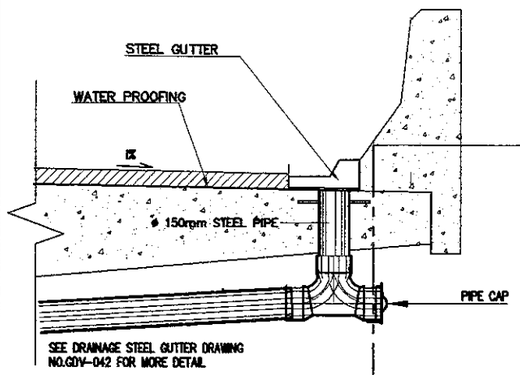

DETAIL OF STEEL GUTTER
SCALE 1:300

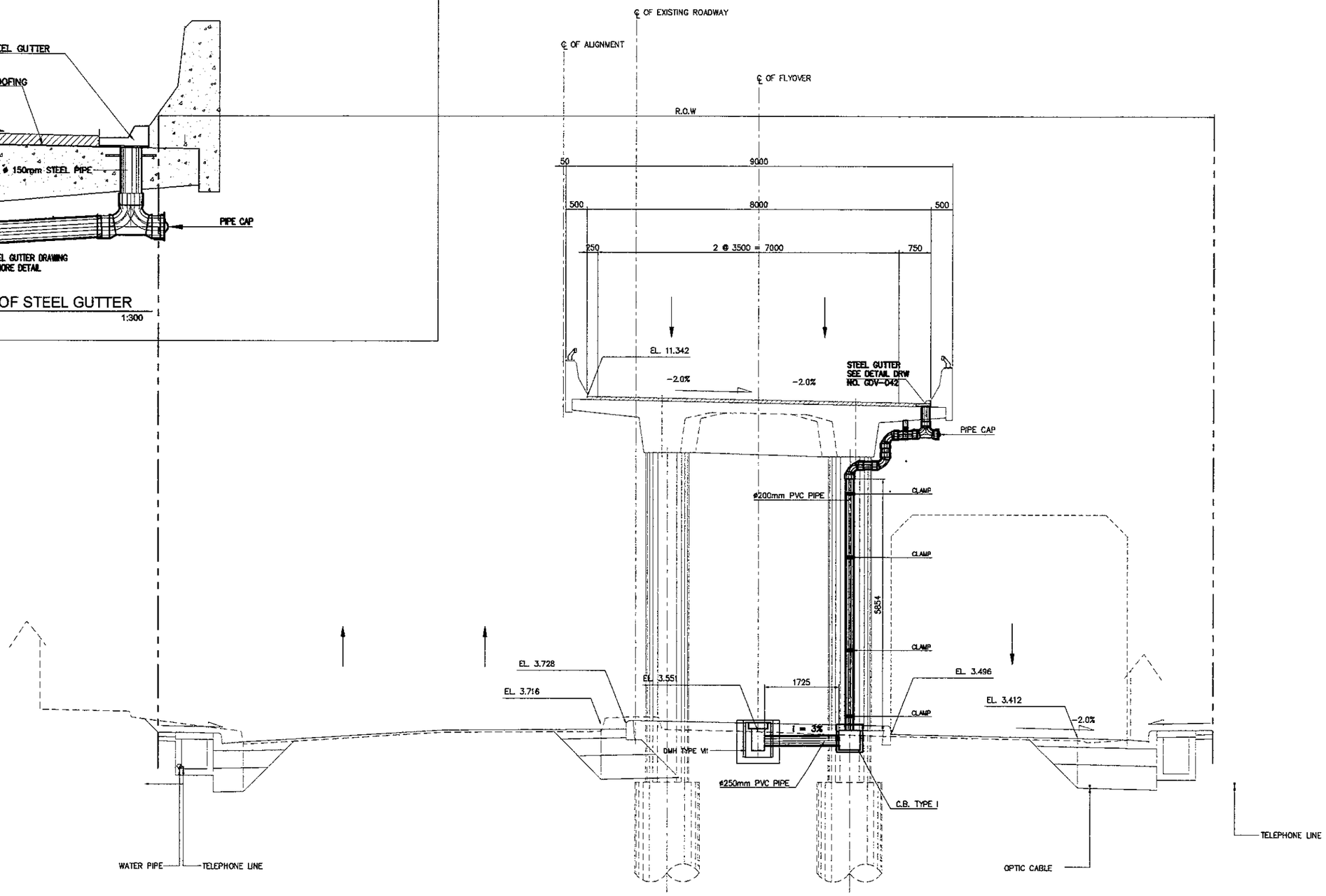

1 P13 SECTION (STA. 0 + 641.00)
SCALE 1:100

PRINTED: OCT. 19, 2006

JAPAN INTERNATIONAL COOPERATION AGENCY KATAHIRA & ENGINEERS INTERNATIONAL	DESIGNED BY	CHECKED BY	SUBMITTED BY	REPUBLIC OF INDONESIA MINISTRY OF PUBLIC WORKS DIRECTORATE GENERAL OF HIGHWAYS	PROJECT AND LOCATION :	SCALE :	DRAWING TITLE :	DRAWING NO :
	Name R. UENO	Name T. OKUMURA	Name M. KIUCHI		DETAILED DESIGN STUDY OF NORTH JAVA CORRIDOR FLYOVER PROJECT GEBANG FLYOVER - CONTRACT PACKAGE 2 (NAGREG - GEBANG) WEST JAVA PROVINCE	1 : 100	ABUTMENT AND PIER SECTIONS SHOWING DOWNSPOUT PIPE 15 OF 17	GDV-028
	Sign	Sign	Sign	APPROVED BY Ir. HERRY VAZA M,Eng.Sc NIP. : 110038400 Sign				SHEET NO :
	Date	Date	Date	Date		FULL SIZE A3		28 / 43

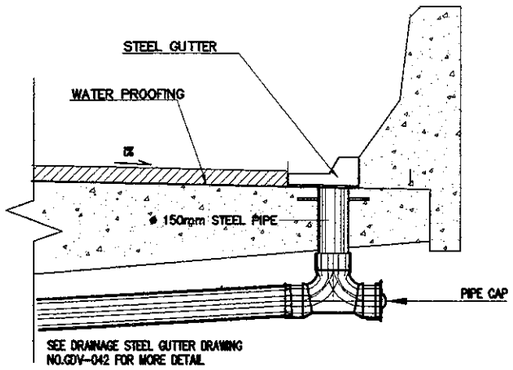

DETAIL OF STEEL GUTTER
SCALE 1:300

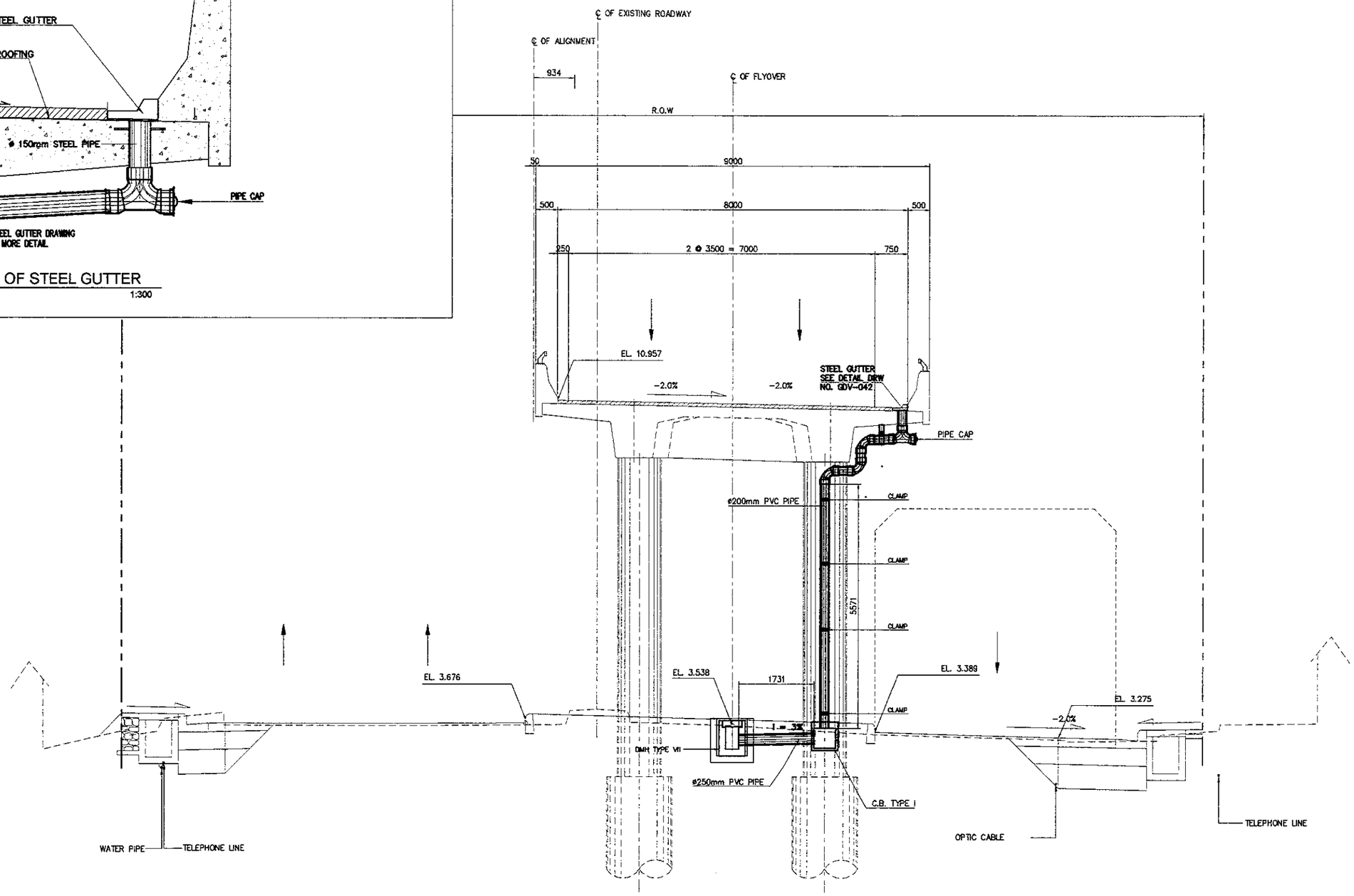

1 / - P14 SECTION (STA. 0 + 661.00)
SCALE 1:100

PRINTED: OCT. 19, 2006

JAPAN INTERNATIONAL COOPERATION AGENCY KATAHIRA & ENGINEERS INTERNATIONAL	DESIGNED BY	CHECKED BY	SUBMITTED BY	REPUBLIC OF INDONESIA MINISTRY OF PUBLIC WORKS DIRECTORATE GENERAL OF HIGHWAYS	PROJECT AND LOCATION :	SCALE :	DRAWING TITLE :	DRAWING NO :
	Name: R. UENO	Name: T. OKUMURA	Name: M. KIUCHI		DETAILED DESIGN STUDY OF NORTH JAVA CORRIDOR FLYOVER PROJECT GEBANG FLYOVER - CONTRACT PACKAGE 2 (NAGREG - GEBANG) WEST JAVA PROVINCE	1 : 100	ABUTMENT AND PIER SECTIONS SHOWING DOWNSPOUT PIPE 16 OF 17	GDV-029
	Sign	Sign	Sign	APPROVED BY: ir. HERRY VAZA M,Eng.Sc NIP. : 110038400		FULL SIZE A3		SHEET NO : 29 / 43
	Date	Date	Date	Sign / Date				

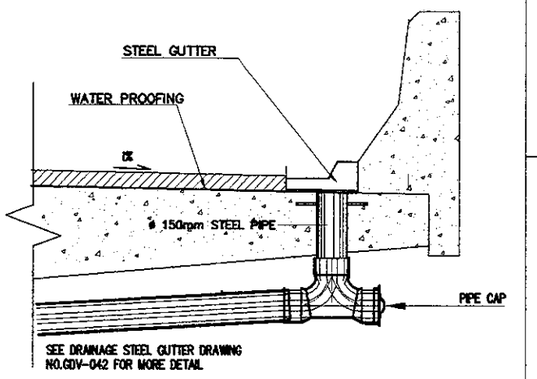

DETAIL OF STEEL GUTTER
SCALE 1:300

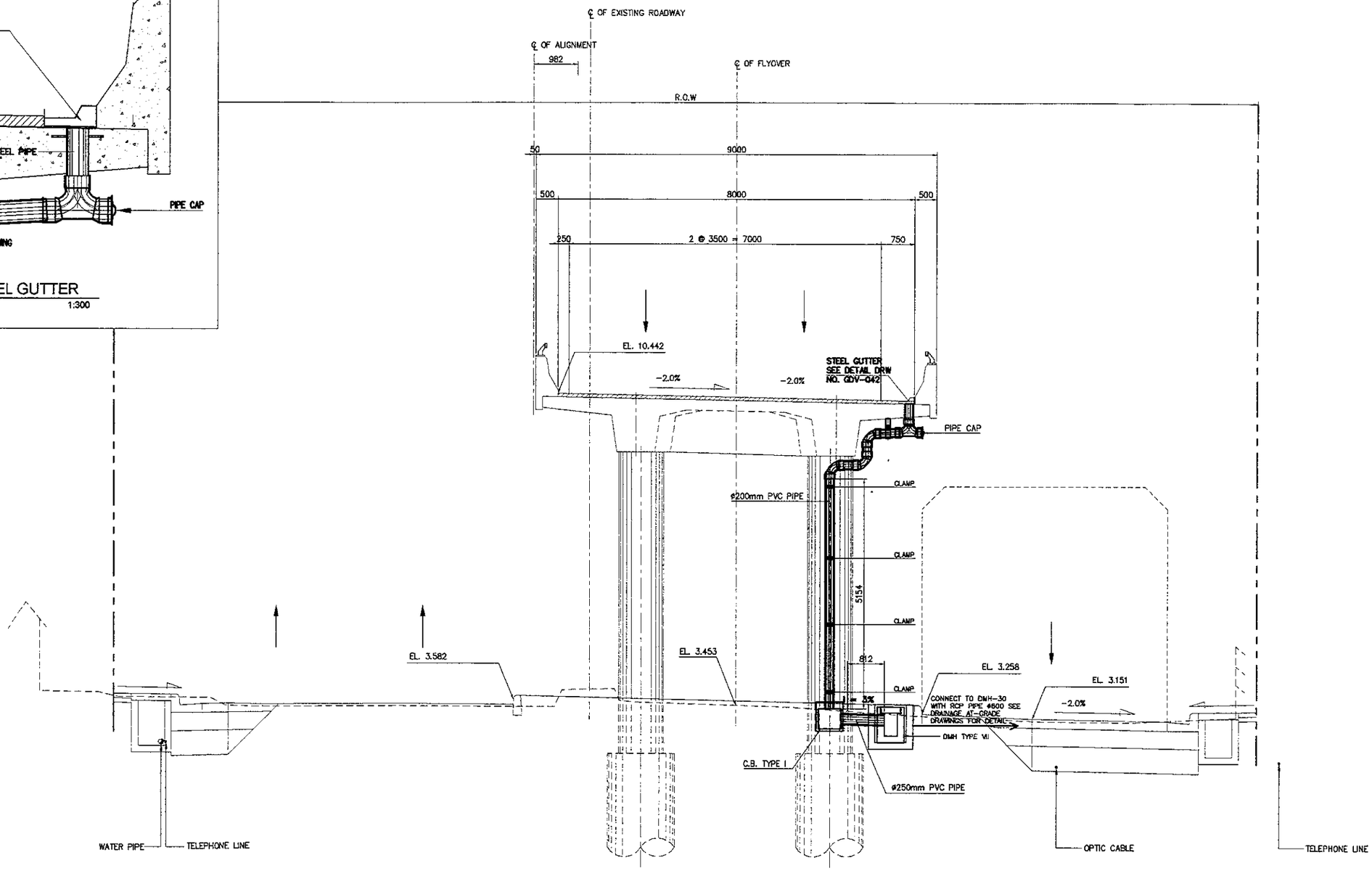

1 / - P15 SECTION (STA. 0 + 681.00)
SCALE 1:100

PRINTED: OCT. 19, 2006

JAPAN INTERNATIONAL COOPERATION AGENCY KATAHIRA & ENGINEERS INTERNATIONAL	DESIGNED BY	CHECKED BY	SUBMITTED BY	REPUBLIC OF INDONESIA MINISTRY OF PUBLIC WORKS DIRECTORATE GENERAL OF HIGHWAYS	PROJECT AND LOCATION :	SCALE :	DRAWING TITLE :	DRAWING NO :
	Name: R. UENO	Name: T. OKUMURA	Name: M. KIUCHI		DETAILED DESIGN STUDY OF NORTH JAVA CORRIDOR FLYOVER PROJECT GEBANG FLYOVER - CONTRACT PACKAGE 2 (NAGREG - GEBANG) WEST JAVA PROVINCE	1 : 100	ABUTMENT AND PIER SECTIONS SHOWING DOWNSPOUT PIPE 17 OF 17	GDV-030
	Sign	Sign	Sign	APPROVED BY: Ir. HERRY VAZA M,Eng.Sc NIP. : 110038400		FULL SIZE A3		SHEET NO : 30 / 43
	Date	Date	Date	Sign / Date				

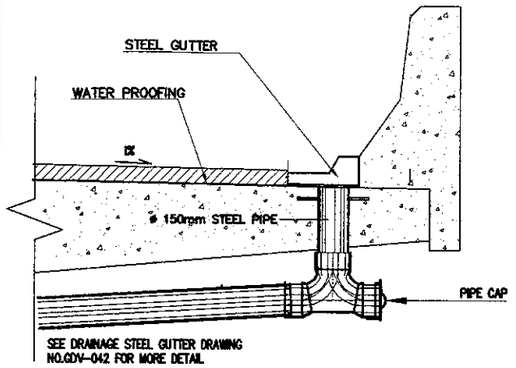

DETAIL OF STEEL GUTTER
SCALE 1:300

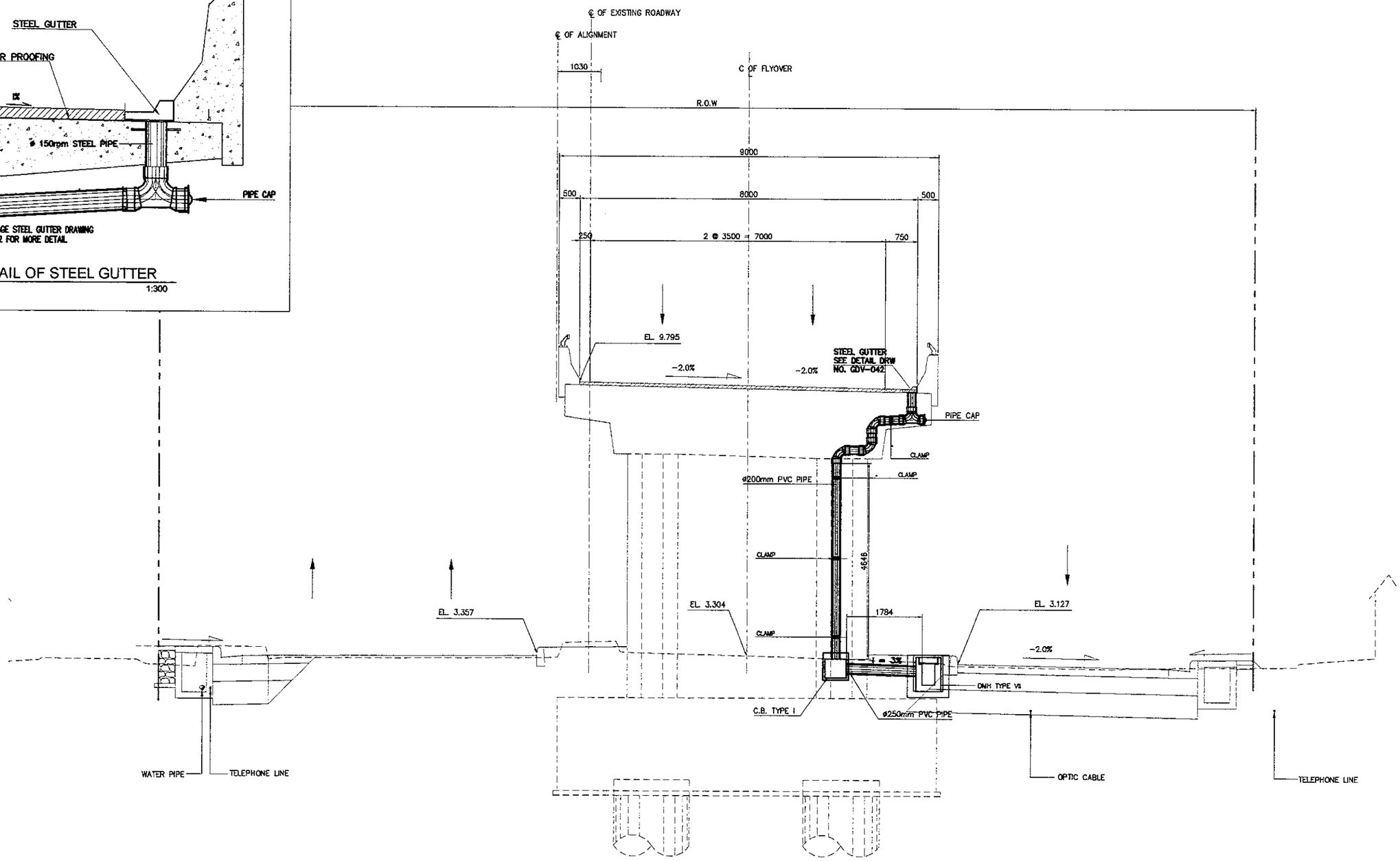

1 / - A2 SECTION (STA. 0 + 701.00)
SCALE 1:100

PRINTED: OCT. 19, 2006

JAPAN INTERNATIONAL COOPERATION AGENCY KATAHIRA & ENGINEERS INTERNATIONAL	DESIGNED BY	CHECKED BY	SUBMITTED BY	REPUBLIC OF INDONESIA MINISTRY OF PUBLIC WORKS DIRECTORATE GENERAL OF HIGHWAYS	PROJECT AND LOCATION :	SCALE :	DRAWING TITLE :	DRAWING NO :
	Name: R. UENO	Name: T. OKUMURA	Name: M. KIUCHI		DETAILED DESIGN STUDY OF NORTH JAVA CORRIDOR FLYOVER PROJECT GEBANG FLYOVER - CONTRACT PACKAGE 2 (NAGREG - GEBANG) WEST JAVA PROVINCE	1 : 10 1 : 20 1 : 50 1 : 60	DRAINAGE CATCH BASIN DETAILS	GDV - 031
	Sign	Sign	Sign	APPROVED BY: Ir. HERRY VAZA M,Eng.Sc NIP. : 110038400				SHEET NO :
	Date	Date	Date	Sign / Date		FULL SIZE A3		31 / 43

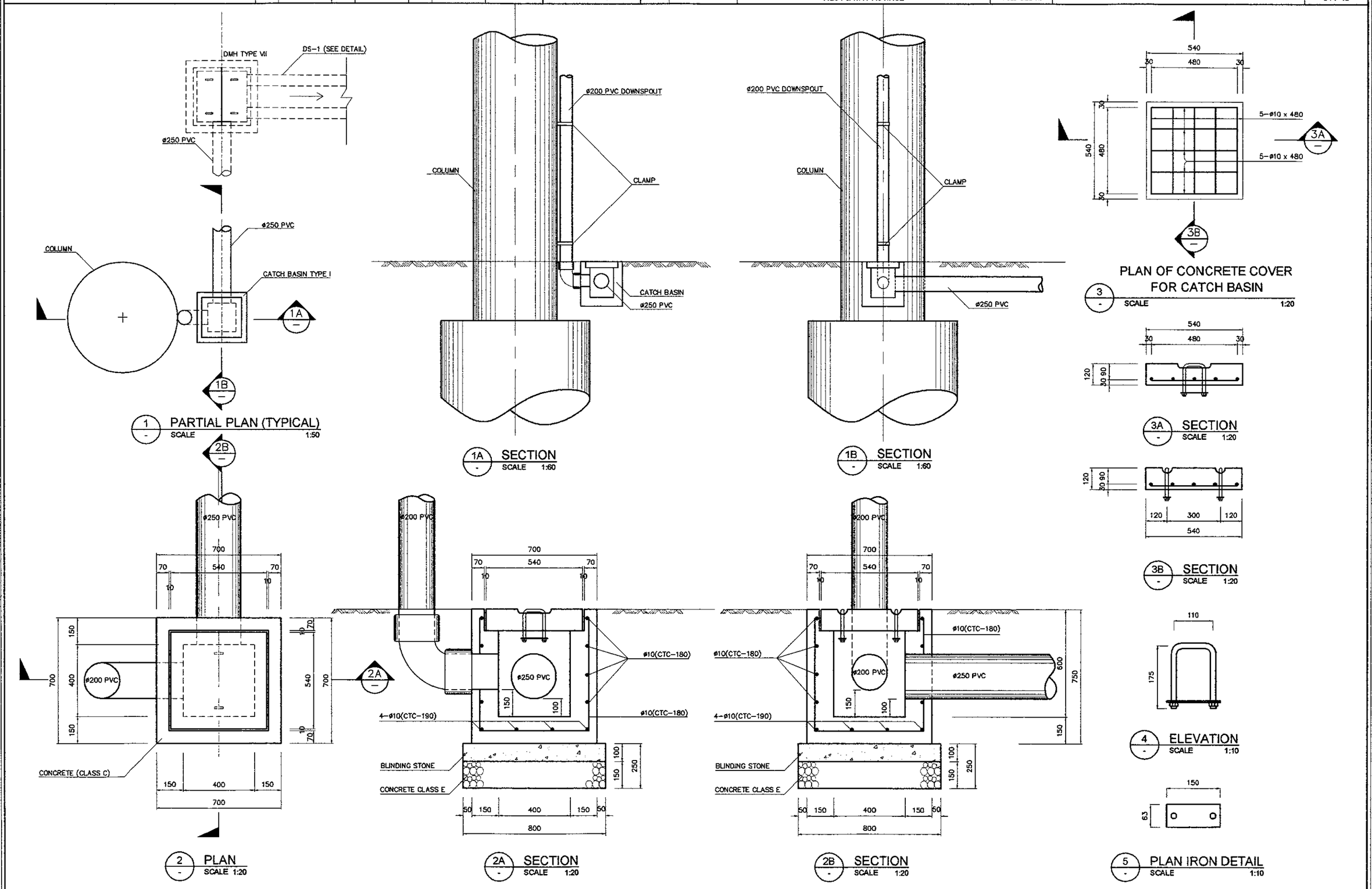

JAPAN INTERNATIONAL COOPERATION AGENCY KATAHIRA & ENGINEERS INTERNATIONAL	DESIGNED BY	CHECKED BY	SUBMITTED BY	REPUBLIC OF INDONESIA MINISTRY OF PUBLIC WORKS DIRECTORATE GENERAL OF HIGHWAYS	PROJECT AND LOCATION :	SCALE :	DRAWING TITLE :	DRAWING NO :
	Name: R. UENO	Name: T. OKUMURA	Name: M. KIUCHI		DETAILED DESIGN STUDY OF NORTH JAVA CORRIDOR FLYOVER PROJECT GEBANG FLYOVER - CONTRACT PACKAGE 2 (NAGREG - GEBANG) WEST JAVA PROVINCE	1 : 10 1 : 20 1 : 50	DRAINAGE DETAILS OF MANHOLE TYPE - VII	GDV - 032
	Sign	Sign	Sign	APPROVED BY: Ir. HERRY VAZA M,Eng.Sc NIP. : 110038400				SHEET NO :
	Date	Date	Date	Sign / Date		FULL SIZE A3		32 / 43

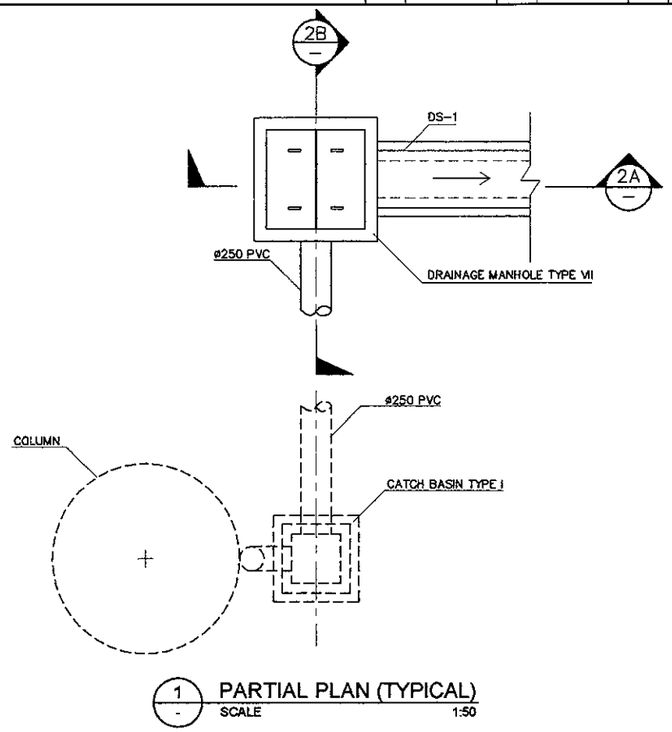

1 PARTIAL PLAN (TYPICAL)
SCALE 1:50

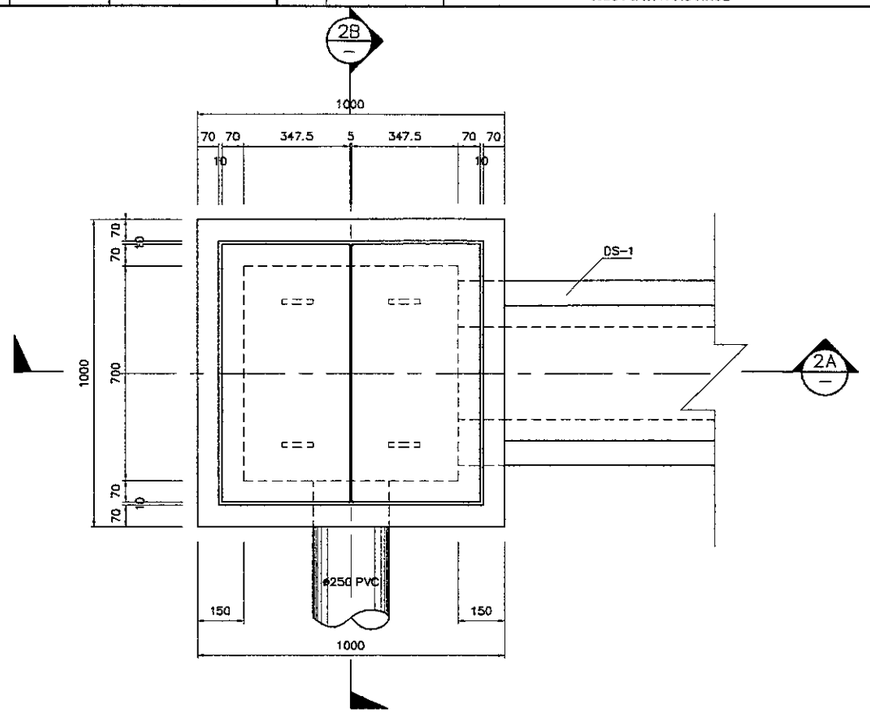

2 PLAN
SCALE 1:20

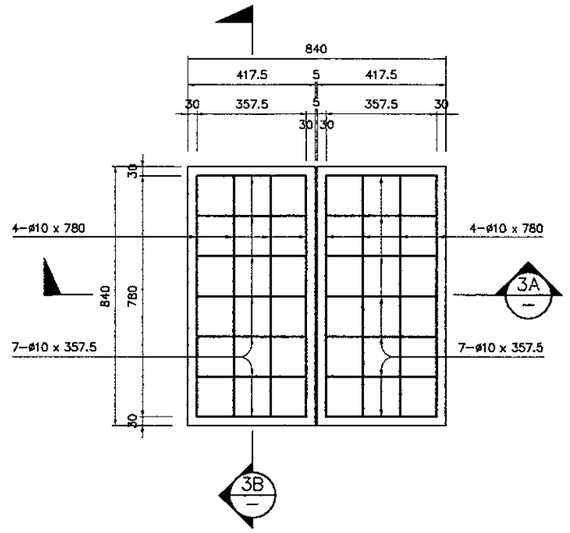

3 PLAN
SCALE 1:20

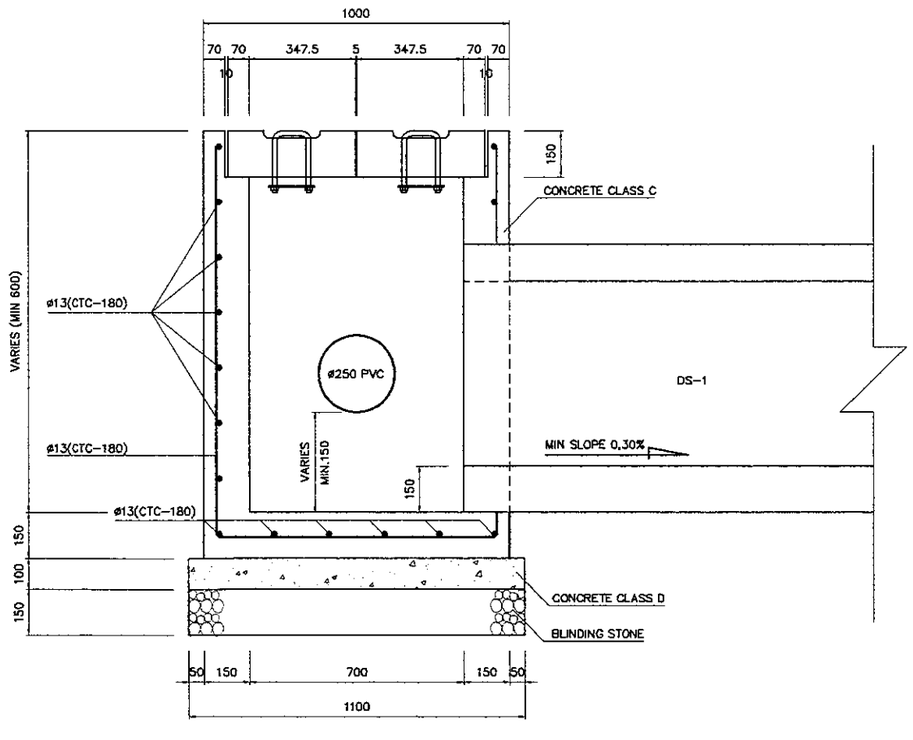

2A SECTION
SCALE 1:20

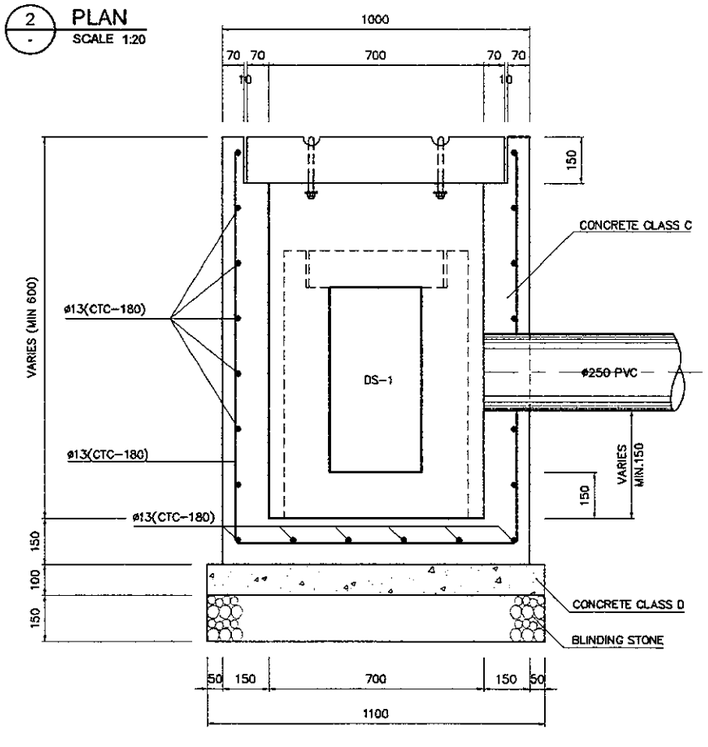

2B SECTION
SCALE 1:20

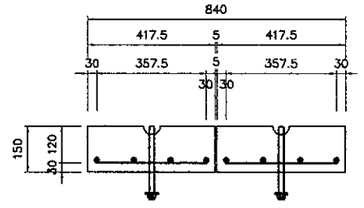

3A SECTION
SCALE 1:20

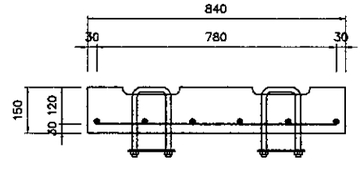

3B SECTION
SCALE 1:20

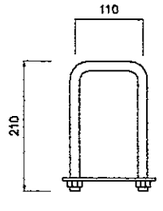

3C ELEVATION
SCALE 1:10

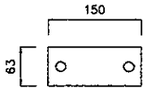

3D PLAN IRON DETAIL
SCALE 1:10

PRINTED: OCT. 19, 2006

JAPAN INTERNATIONAL COOPERATION AGENCY / KATAHIRA & ENGINEERS INTERNATIONAL	DESIGNED BY	CHECKED BY	SUBMITTED BY	REPUBLIC OF INDONESIA MINISTRY OF PUBLIC WORKS DIRECTORATE GENERAL OF HIGHWAYS	PROJECT AND LOCATION :	SCALE :	DRAWING TITLE :	DRAWING NO :
	Name R. UENO	Name T. OKUMURA	Name M. KIUCHI		DETAILED DESIGN STUDY OF NORTH JAVA CORRIDOR FLYOVER PROJECT GEBANG FLYOVER - CONTRACT PACKAGE 2 (NAGREG - GEBANG) WEST JAVA PROVINCE	1 : 50	DRAINAGE DETAILS OF MANHOLE TYPE - VIII	GDV - 033
	Sign	Sign	Sign	APPROVED BY Ir. HERRY VAZA M,Eng.Sc NIP. : 110038400 Sign				SHEET NO :
	Date	Date	Date	Date		FULL SIZE A3		33 / 43

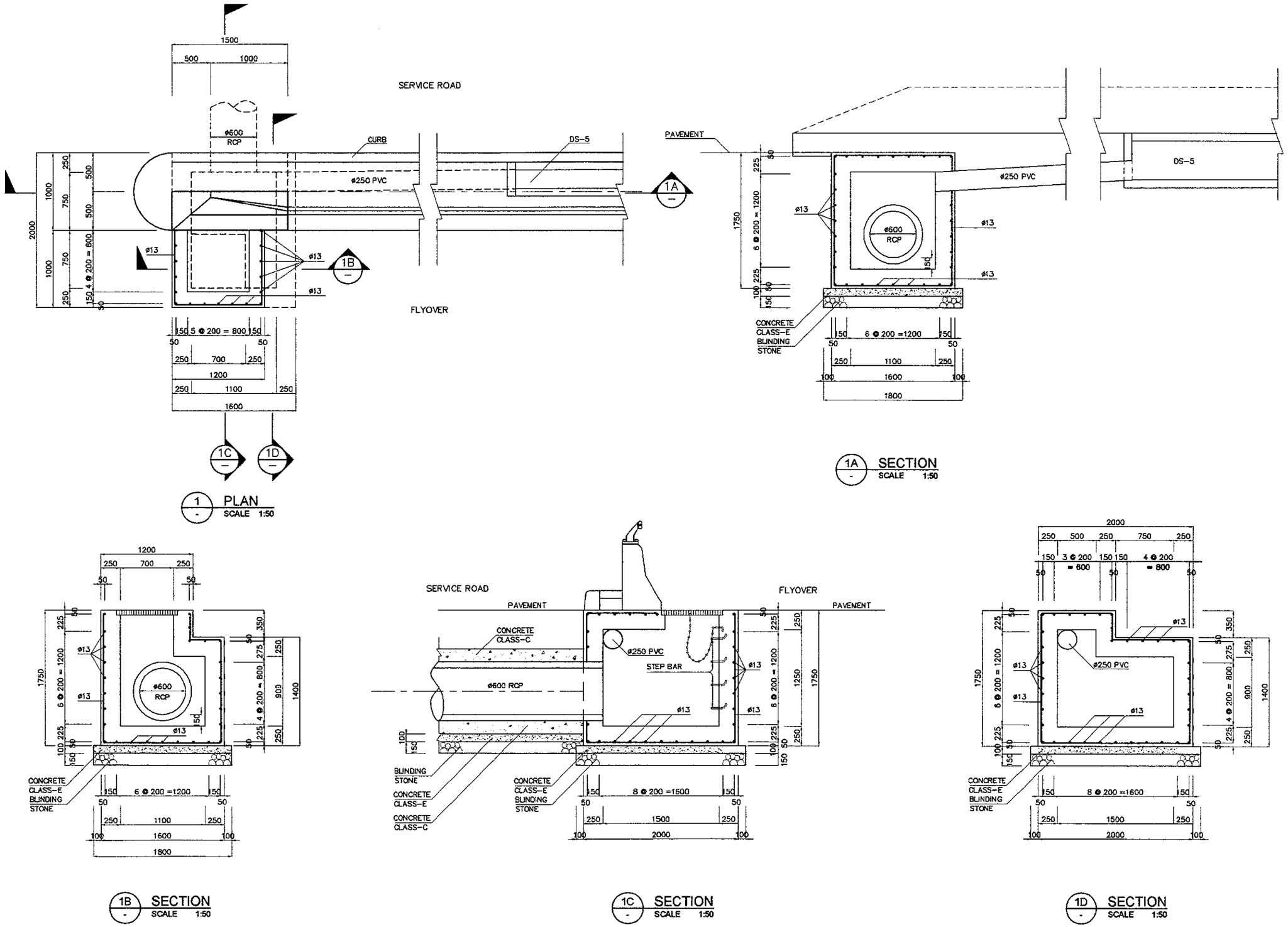

JICA JAPAN INTERNATIONAL COOPERATION AGENCY KATAHIRA & ENGINEERS INTERNATIONAL	DESIGNED BY	CHECKED BY	SUBMITTED BY	REPUBLIC OF INDONESIA MINISTRY OF PUBLIC WORKS DIRECTORATE GENERAL OF HIGHWAYS	PROJECT AND LOCATION :	SCALE :	DRAWING TITLE :	DRAWING NO :
	Name: R. UENO	Name: T. OKUMURA	Name: M. KIUCHI		DETAILED DESIGN STUDY OF NORTH JAVA CORRIDOR FLYOVER PROJECT GEBANG FLYOVER - CONTRACT PACKAGE 2 (NAGREG - GEBANG) WEST JAVA PROVINCE	1 : 5 1 : 15 1 : 20 1 : 50	STEEL GRATING DETAILS OF MANHOLE TYPE - VIII	GDV - 034
	Sign	Sign	Sign	APPROVED BY: Ir. HERRY VAZA M,Eng.Sc				SHEET NO :
	Date	Date	Date	NIP. : 110038400 Sign / Date		FULL SIZE A3		34 / 43

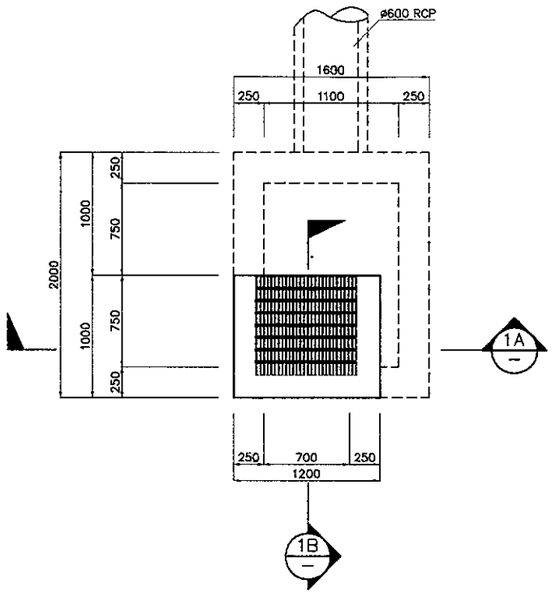

1 PLAN
SCALE 1:50

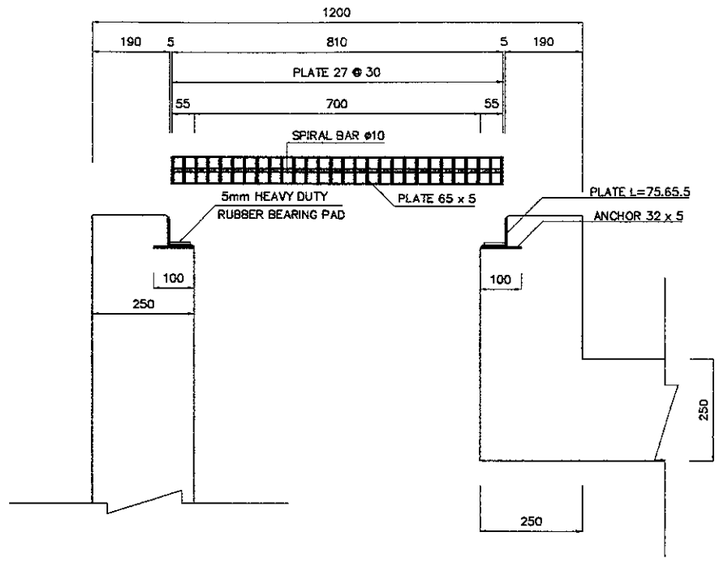

1A SECTION
SCALE 1:15

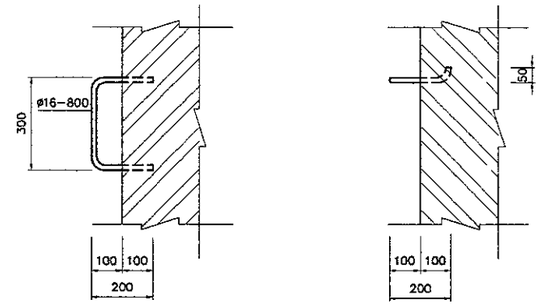

3 STEP DETAIL
SCALE 1:20

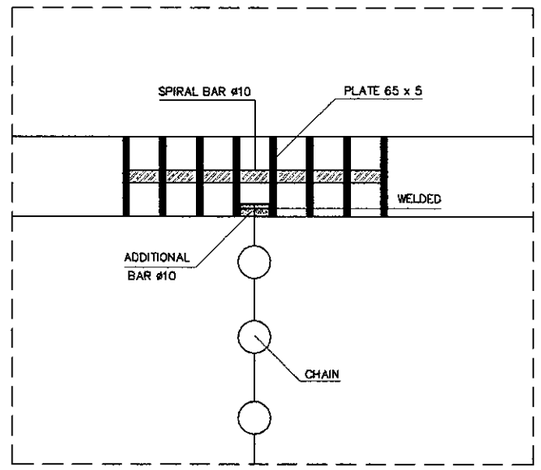

4 DETAIL "A"
SCALE 1:5

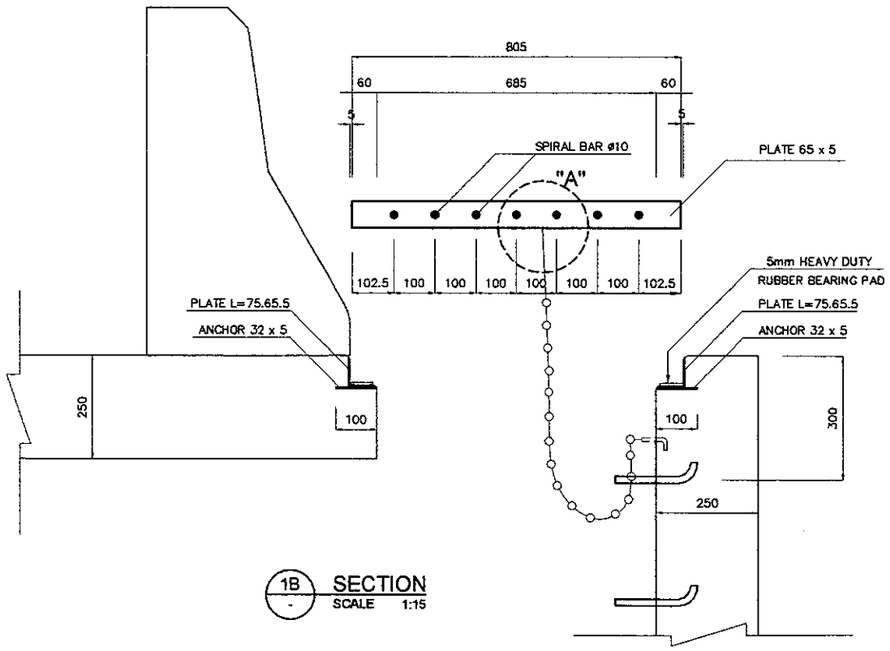

1B SECTION
SCALE 1:15

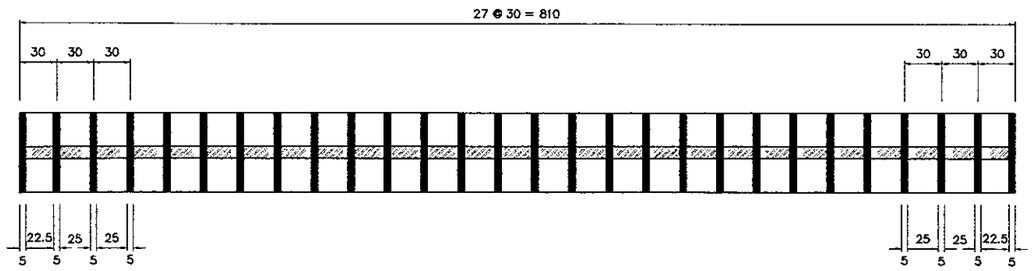

5 DETAILS STEEL GRATING
SCALE 1:5

PRINTED: OCT. 19, 2006

JAPAN INTERNATIONAL COOPERATION AGENCY / KATAHIRA & ENGINEERS INTERNATIONAL	DESIGNED BY	CHECKED BY	SUBMITTED BY	REPUBLIC OF INDONESIA MINISTRY OF PUBLIC WORKS DIRECTORATE GENERAL OF HIGHWAYS	PROJECT AND LOCATION :	SCALE :	DRAWING TITLE :	DRAWING NO :
	Name: R. UENO	Name: T. OKUMURA	Name: M. KIUCHI		DETAILED DESIGN STUDY OF NORTH JAVA CORRIDOR FLYOVER PROJECT GEBANG FLYOVER - CONTRACT PACKAGE 2 (NAGREG - GEBANG) WEST JAVA PROVINCE	VARIES	DRAINAGE MISCELLANEOUS VIADUCT DETAILS	GDV-035
	Sign	Sign	Sign	APPROVED BY: Ir. HERRY VAZA M,Eng.Sc				SHEET NO :
	Date	Date	Date	NIP. : 110038400 — Sign / Date		FULL SIZE A3		35 / 43

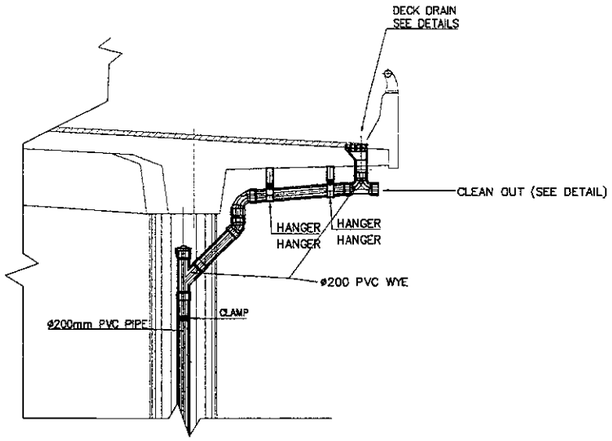

1 DECK DRAIN / DOWNSPOUT DETAIL
SCALE 1:50

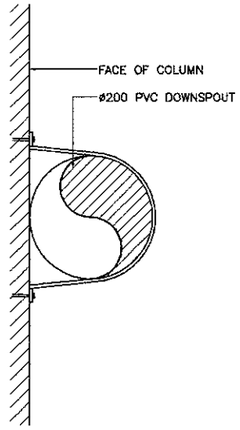

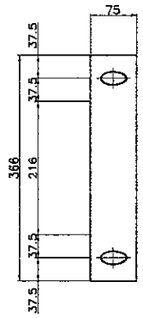

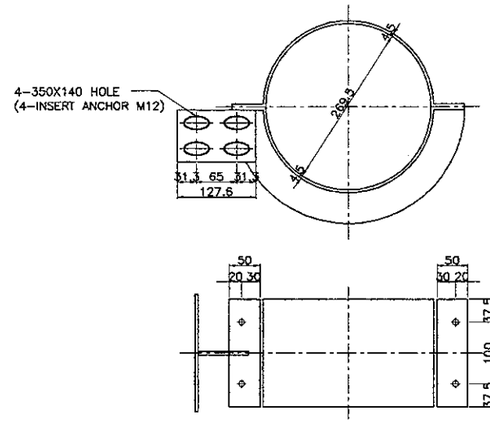

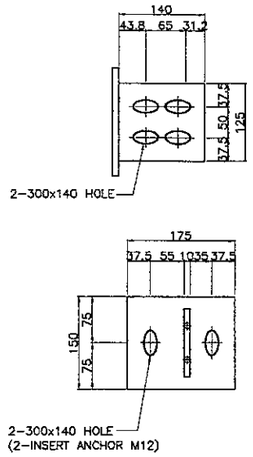

2 CLAMP
SCALE 1:5

3 BRACKET
SCALE 1:5

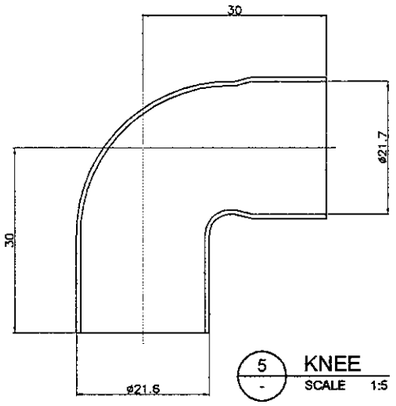

5 KNEE
SCALE 1:5

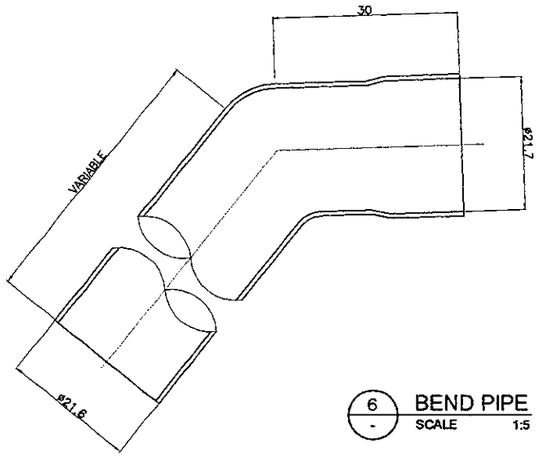

6 BEND PIPE
SCALE 1:5

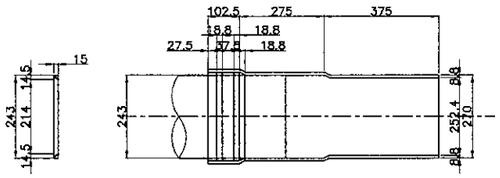

4 HORIZONTAL JOINTING
SCALE 1:10

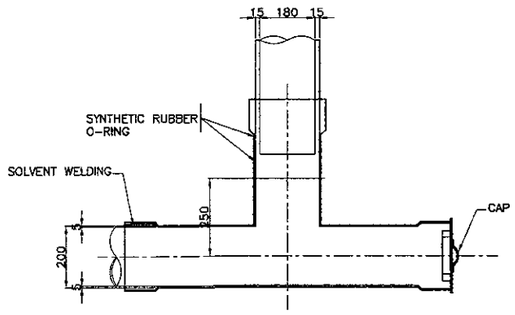

7 VERTICAL JOINTING
SCALE 1:10

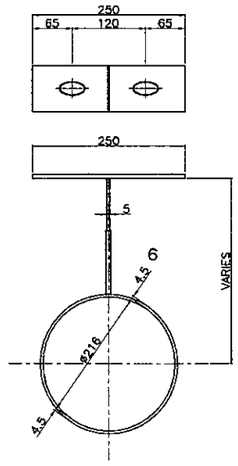

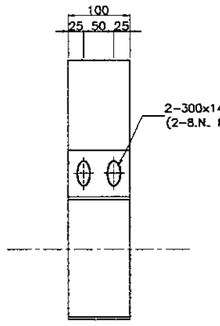

8 HANGER
SCALE 1:5

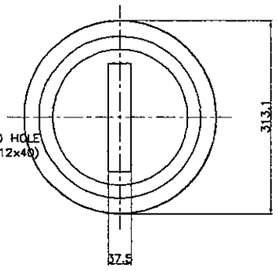

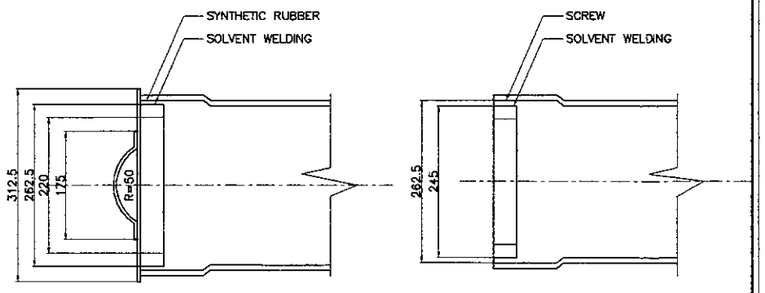

9 CLEAN OUT
SCALE 1:5

PRINTED: OCT. 19, 2006

JAPAN INTERNATIONAL COOPERATION AGENCY KATAHIRA & ENGINEERS INTERNATIONAL	DESIGNED BY	CHECKED BY	SUBMITTED BY	REPUBLIC OF INDONESIA MINISTRY OF PUBLIC WORKS DIRECTORATE GENERAL OF HIGHWAYS	PROJECT AND LOCATION :	SCALE :	DRAWING TITLE :	DRAWING NO :
	Name: R. UENO	Name: T. OKUMURA	Name: M. KIUCHI		DETAILED DESIGN STUDY OF NORTH JAVA CORRIDOR FLYOVER PROJECT GEBANG FLYOVER - CONTRACT PACKAGE 2 (NAGREG - GEBANG) WEST JAVA PROVINCE	1 : 200	PLAN AND ELEVATION OF VIADUCT ALONG APPROACH 1 OF 6	GDV-036
	Sign	Sign	Sign	APPROVED BY: Ir. HERRY VAZA M,Eng.Sc NIP. : 110038400				SHEET NO :
	Date	Date	Date	Sign / Date		FULL SIZE A3		36 / 43

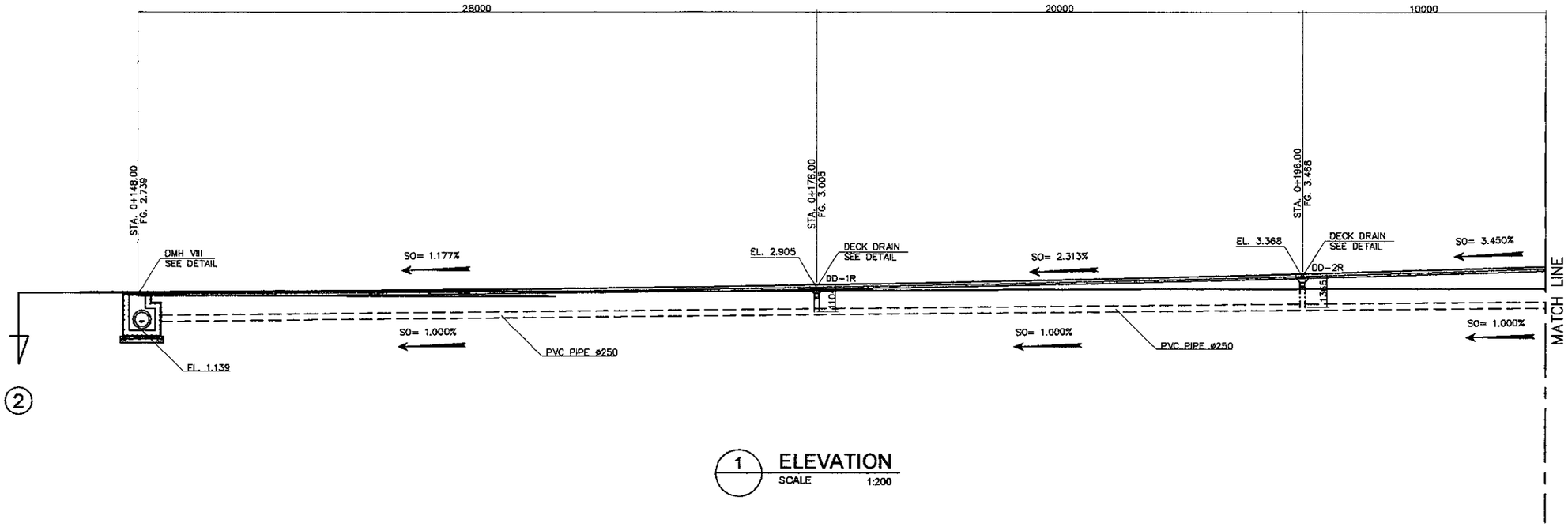

1 ELEVATION
SCALE 1:200

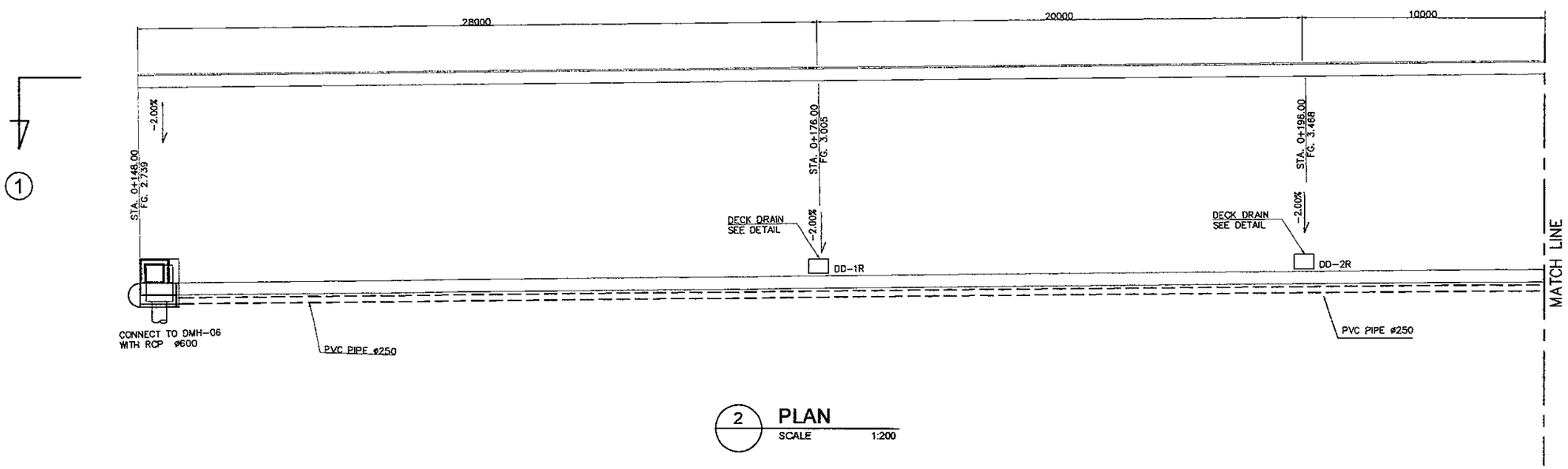

2 PLAN
SCALE 1:200

JAPAN INTERNATIONAL COOPERATION AGENCY KATAHIRA & ENGINEERS INTERNATIONAL	DESIGNED BY	CHECKED BY	SUBMITTED BY	REPUBLIC OF INDONESIA MINISTRY OF PUBLIC WORKS DIRECTORATE GENERAL OF HIGHWAYS	PROJECT AND LOCATION :	SCALE :	DRAWING TITLE :	DRAWING NO :
	Name: R. UENO	Name: T. OKUMURA	Name: M. KIUCHI		DETAILED DESIGN STUDY OF NORTH JAVA CORRIDOR FLYOVER PROJECT GEBANG FLYOVER - CONTRACT PACKAGE 2 (NAGREG - GEBANG) WEST JAVA PROVINCE	1 : 200	PLAN AND ELEVATION OF VIADUCT ALONG APPROACH 2 OF 6	GDV-037
	Sign	Sign	Sign	APPROVED BY: Ir. HERRY VAZA M,Eng.Sc NIP. : 110036400				SHEET NO :
	Date	Date	Date	Sign / Date		FULL SIZE A3		37 / 43

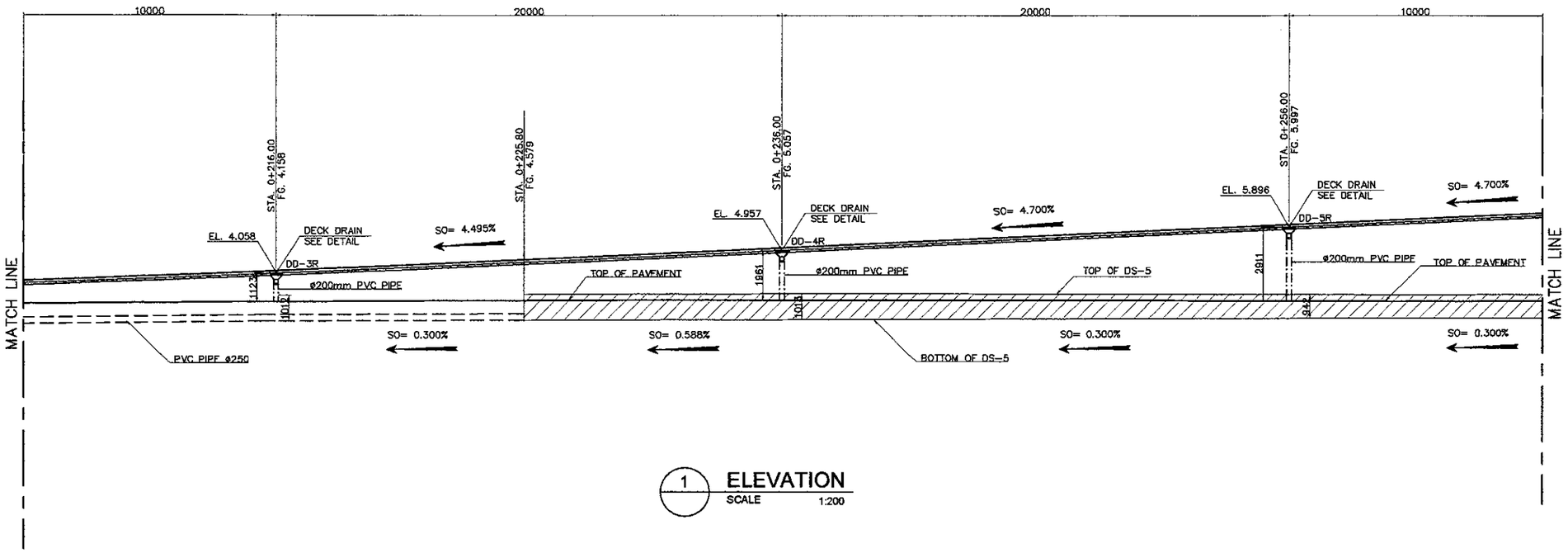

1 ELEVATION
SCALE 1:200

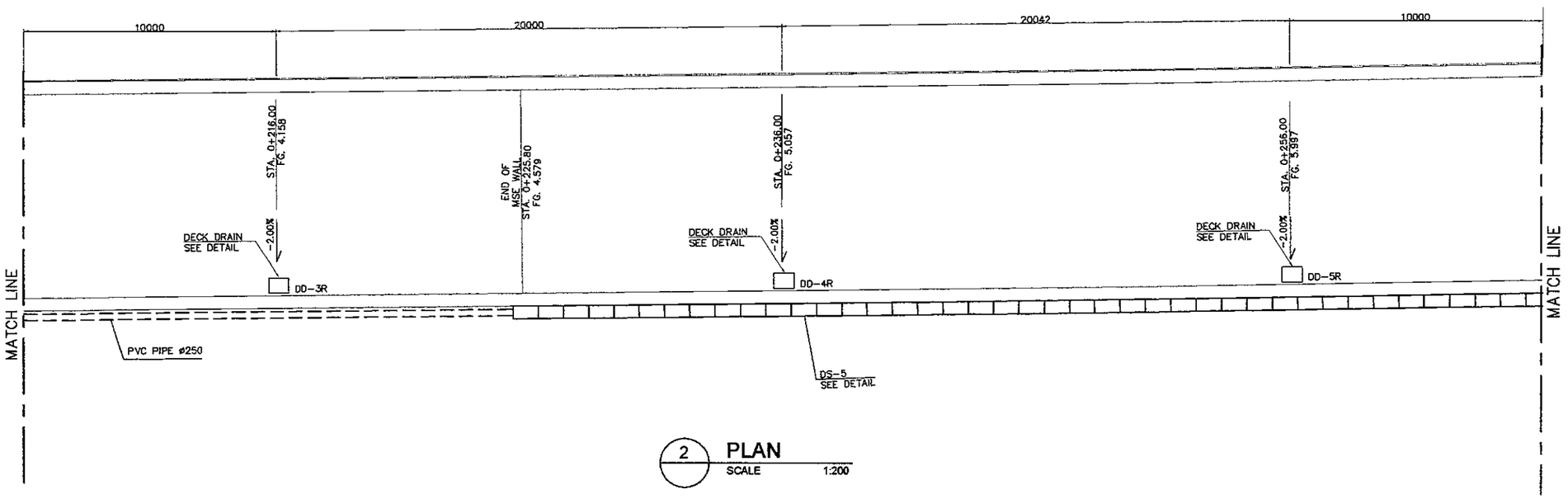

2 PLAN
SCALE 1:200

JAPAN INTERNATIONAL COOPERATION AGENCY KATAHIRA & ENGINEERS INTERNATIONAL	DESIGNED BY	CHECKED BY	SUBMITTED BY	REPUBLIC OF INDONESIA MINISTRY OF PUBLIC WORKS DIRECTORATE GENERAL OF HIGHWAYS	PROJECT AND LOCATION :	SCALE :	DRAWING TITLE :	DRAWING NO :
	Name: R. UENO	Name: T. OKUMURA	Name: M. KIUCHI		DETAILED DESIGN STUDY OF NORTH JAVA CORRIDOR FLYOVER PROJECT GEBANG FLYOVER - CONTRACT PACKAGE 2 (NAGREG - GEBANG) WEST JAVA PROVINCE	1 : 200	PLAN AND ELEVATION OF VIADUCT ALONG APPROACH 3 OF 6	GDV-038
	Sign	Sign	Sign	APPROVED BY: Ir. HERRY VAZA M,Eng.Sc NIP. : 110038400				SHEET NO :
	Date	Date	Date	Sign / Date		FULL SIZE A3		38 / 43

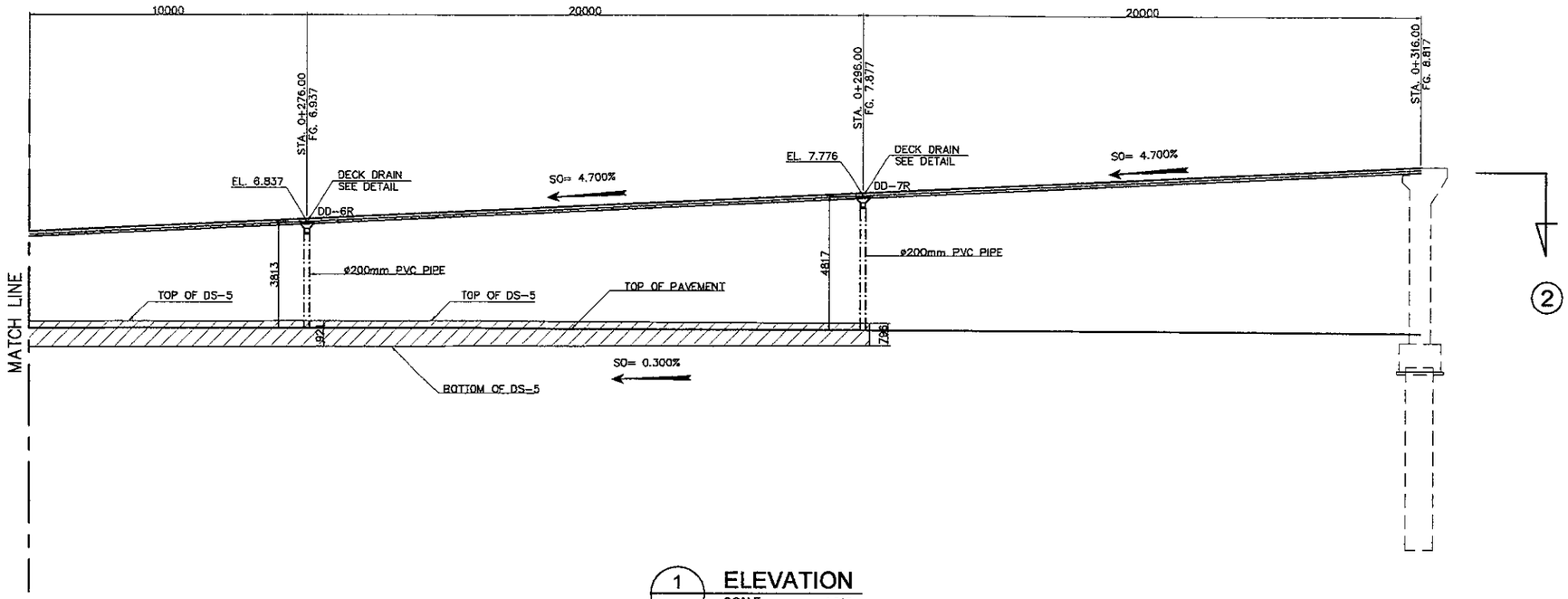

1 ELEVATION
SCALE 1:200

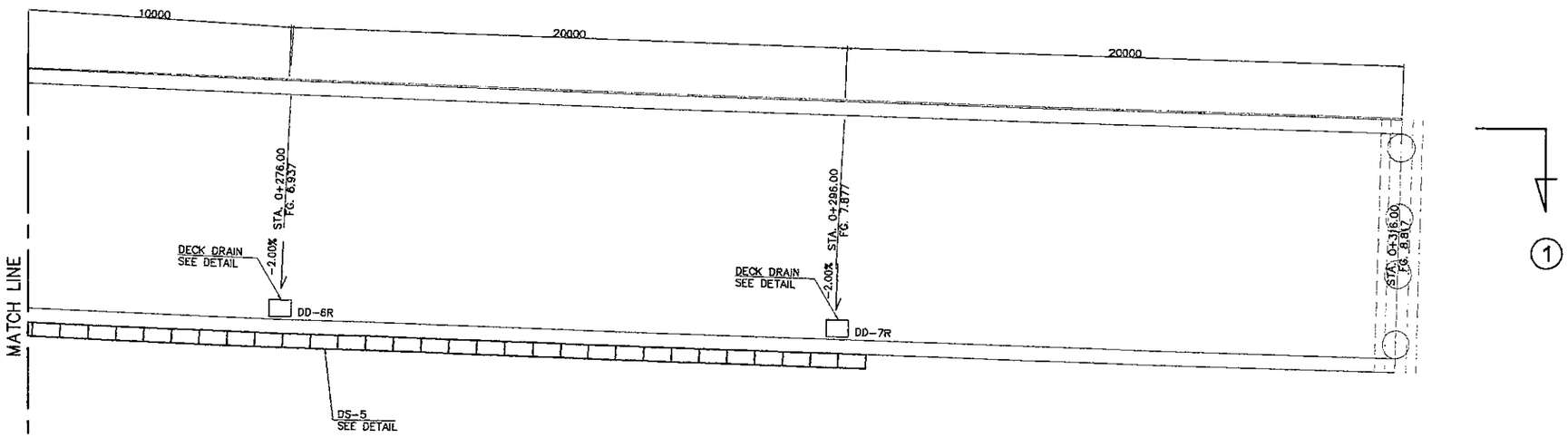

2 PLAN
SCALE 1:200

JAPAN INTERNATIONAL COOPERATION AGENCY KATAHIRA & ENGINEERS INTERNATIONAL	DESIGNED BY	CHECKED BY	SUBMITTED BY	REPUBLIC OF INDONESIA MINISTRY OF PUBLIC WORKS DIRECTORATE GENERAL OF HIGHWAYS	PROJECT AND LOCATION :	SCALE :	DRAWING TITLE :	DRAWING NO :
	Name: R. UENO	Name: T. OKUMURA	Name: M. KIUCHI		DETAILED DESIGN STUDY OF NORTH JAVA CORRIDOR FLYOVER PROJECT GEBANG FLYOVER - CONTRACT PACKAGE 2 (NAGREG - GEBANG) WEST JAVA PROVINCE	1 : 200	PLAN AND ELEVATION OF VIADUCT ALONG APPROACH 4 OF 6	GDV-039
	Sign	Sign	Sign	APPROVED BY: Ir. HERRY VAZA M,Eng.Sc NIP. : 110038400				SHEET NO :
	Date	Date	Date	Sign / Date		FULL SIZE A3		39 / 43

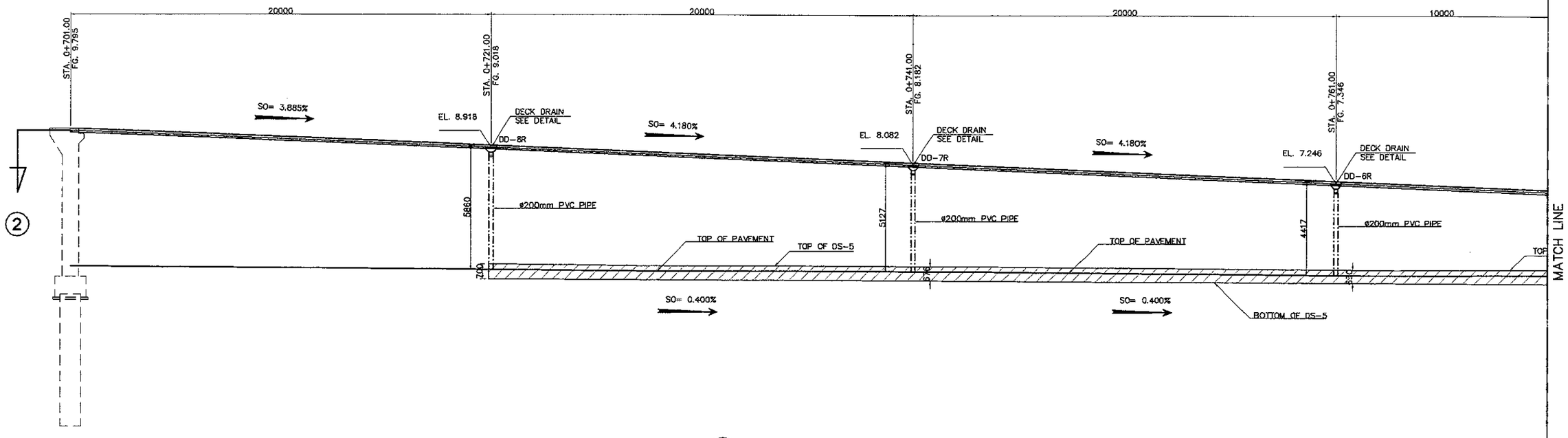

1 ELEVATION
SCALE 1:200

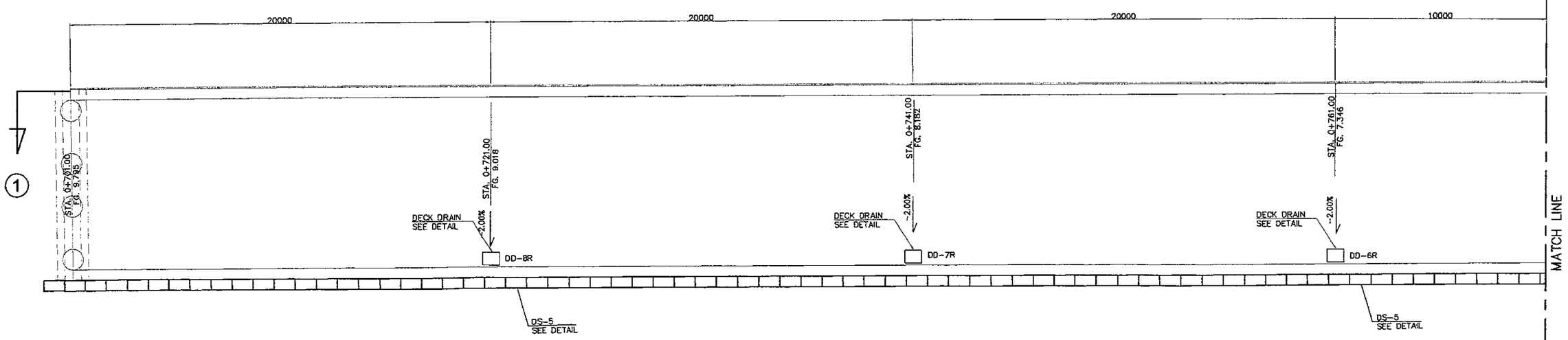

2 PLAN
SCALE 1:200

JAPAN INTERNATIONAL COOPERATION AGENCY KATAHIRA & ENGINEERS INTERNATIONAL	DESIGNED BY	CHECKED BY	SUBMITTED BY	REPUBLIC OF INDONESIA MINISTRY OF PUBLIC WORKS DIRECTORATE GENERAL OF HIGHWAYS	PROJECT AND LOCATION :	SCALE :	DRAWING TITLE :	DRAWING NO :
	Name: R. UENO	Name: T. OKUMURA	Name: M. KIUCHI		DETAILED DESIGN STUDY OF NORTH JAVA CORRIDOR FLYOVER PROJECT GEBANG FLYOVER - CONTRACT PACKAGE 2 (NAGREG - GEBANG) WEST JAVA PROVINCE	1 : 200	PLAN AND ELEVATION OF VIADUCT ALONG APPROACH 5 OF 6	GDV-040
	Sign	Sign	Sign	APPROVED BY: Ir. HERRY VAZA M,Eng.Sc NIP. : 110038400				SHEET NO :
	Date	Date	Date	Sign / Date		FULL SIZE A3		40 / 43

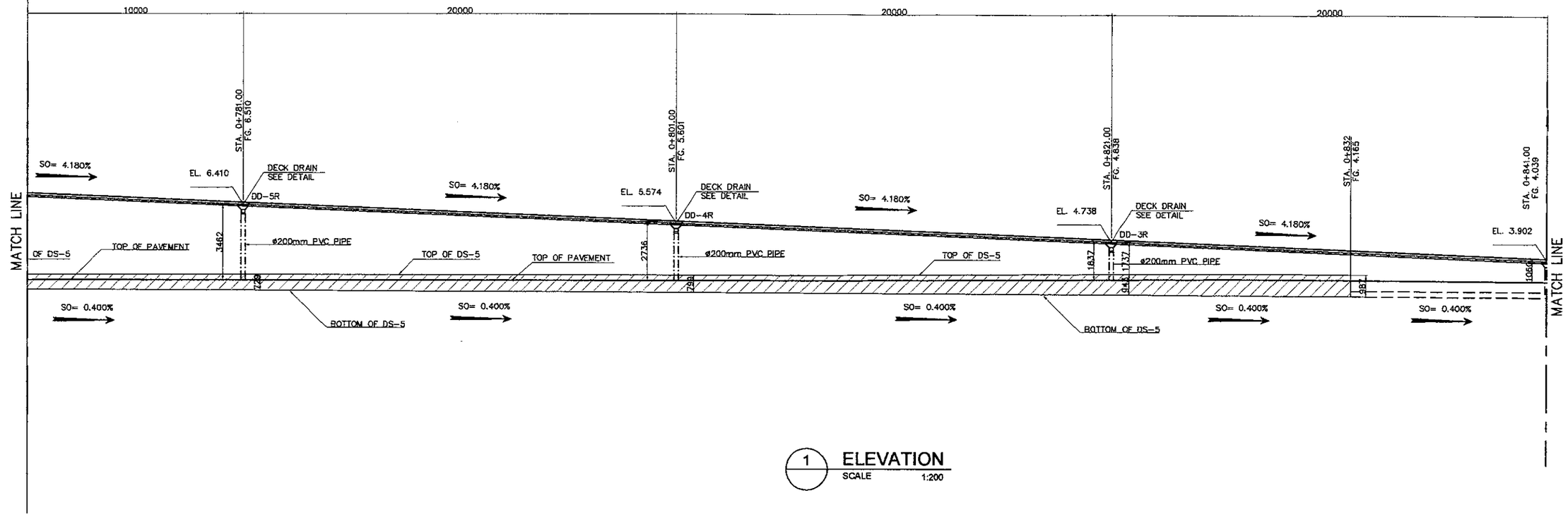

1 ELEVATION
SCALE 1:200

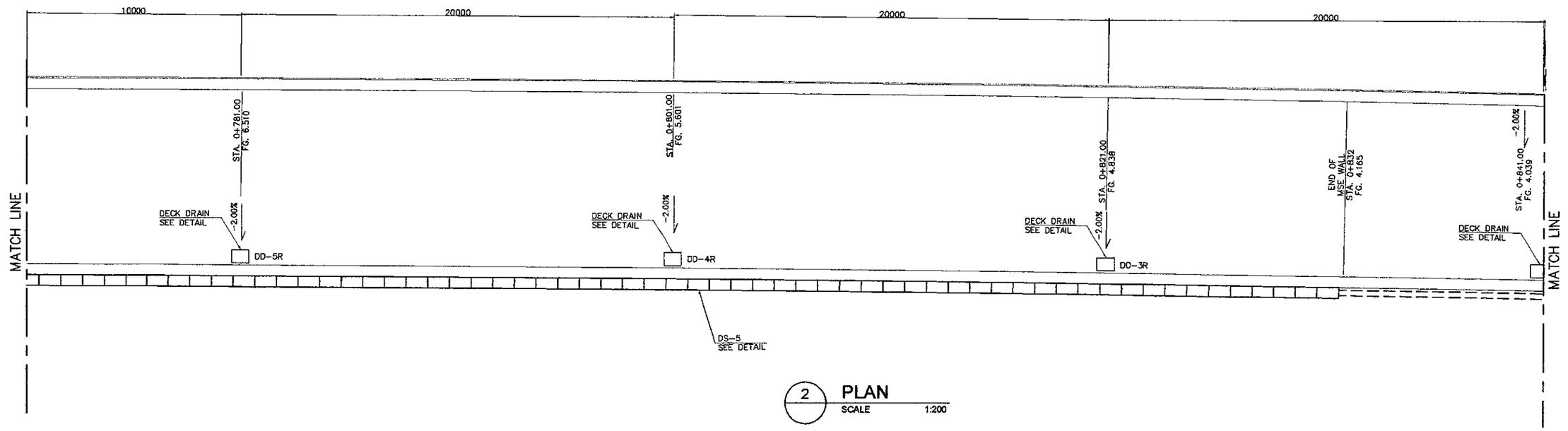

2 PLAN
SCALE 1:200

JAPAN INTERNATIONAL COOPERATION AGENCY KATAHIRA & ENGINEERS INTERNATIONAL	DESIGNED BY		CHECKED BY		SUBMITTED BY		REPUBLIC OF INDONESIA MINISTRY OF PUBLIC WORKS DIRECTORATE GENERAL OF HIGHWAYS	PROJECT AND LOCATION :	SCALE :	DRAWING TITLE :	DRAWING NO :
	Name	R. UENO	Name	T. OKUMURA	Name	M. KIUCHI		DETAILED DESIGN STUDY OF NORTH JAVA CORRIDOR FLYOVER PROJECT GEBANG FLYOVER - CONTRACT PACKAGE 2 (NAGREG - GEBANG) WEST JAVA PROVINCE	1 : 200	PLAN AND ELEVATION OF VIADUCT ALONG APPROACH 6 OF 6	GDV-041
	Sign		Sign		Sign		APPROVED BY: Ir. HERRY VAZA M.Eng.Sc NIP. : 110038400		FULL SIZE A3		SHEET NO : 41 / 43
	Date		Date		Date		Sign / Date				

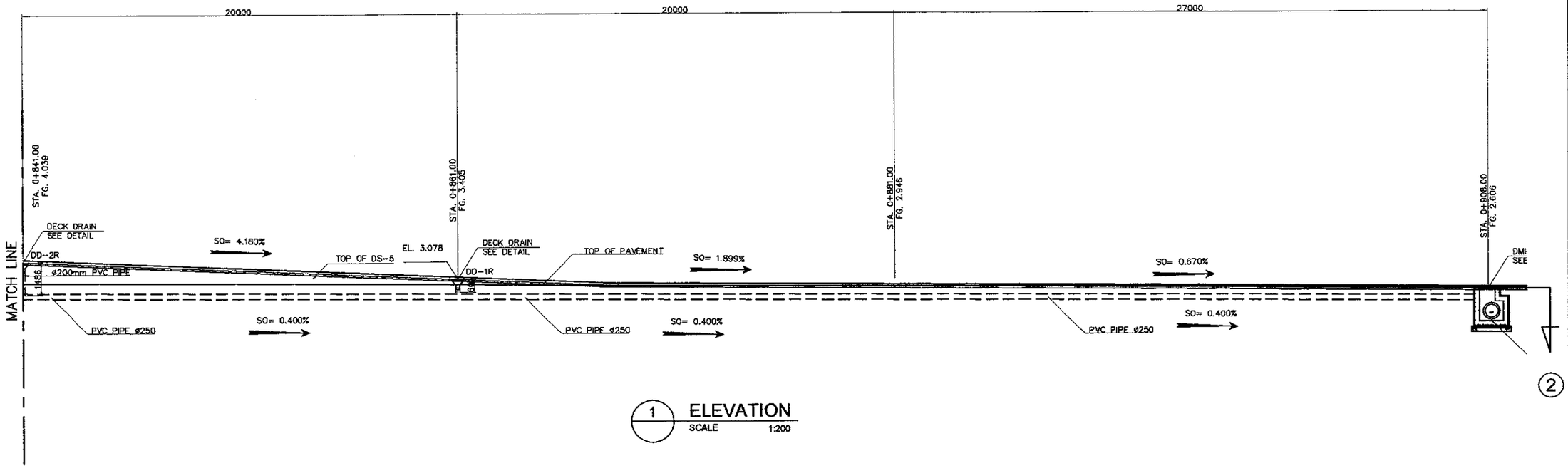

1 ELEVATION
SCALE 1:200

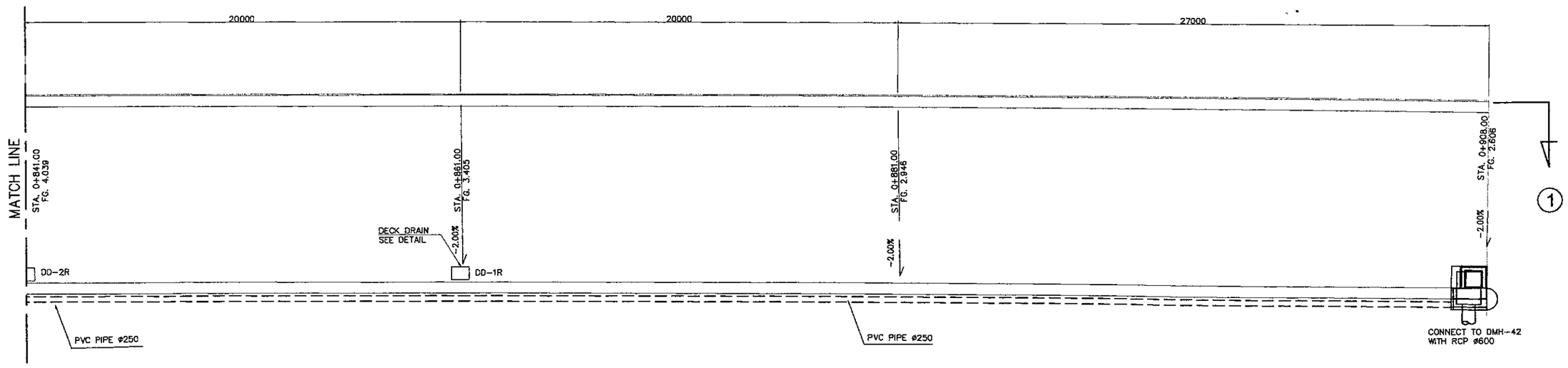

2 PLAN
SCALE 1:200

JAPAN INTERNATIONAL COOPERATION AGENCY KATAHIRA & ENGINEERS INTERNATIONAL	DESIGNED BY	CHECKED BY	SUBMITTED BY	REPUBLIC OF INDONESIA MINISTRY OF PUBLIC WORKS DIRECTORATE GENERAL OF HIGHWAYS	PROJECT AND LOCATION :	SCALE :	DRAWING TITLE :	DRAWING NO :
	Name: R. UENO	Name: T. OKUMURA	Name: M. KIUCHI		DETAILED DESIGN STUDY OF NORTH JAVA CORRIDOR FLYOVER PROJECT GEBANG FLYOVER - CONTRACT PACKAGE 2 (NAGREG - GEBANG) WEST JAVA PROVINCE	VARIOUS	TYIPICAL DETAILS OF STEEL GUTTER	GDV-042
	Sign	Sign	Sign	APPROVED BY: Ir. HERRY VAZA M,Eng.Sc NIP. : 110038400				SHEET NO :
	Date	Date	Date	Sign / Date		FULL SIZE A3		42 / 43

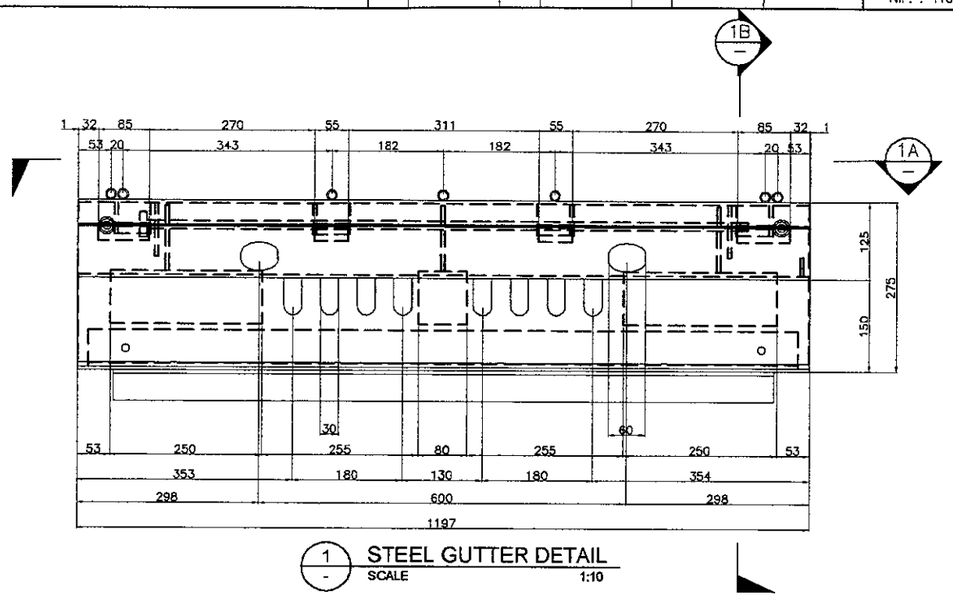

1 STEEL GUTTER DETAIL
SCALE 1:10

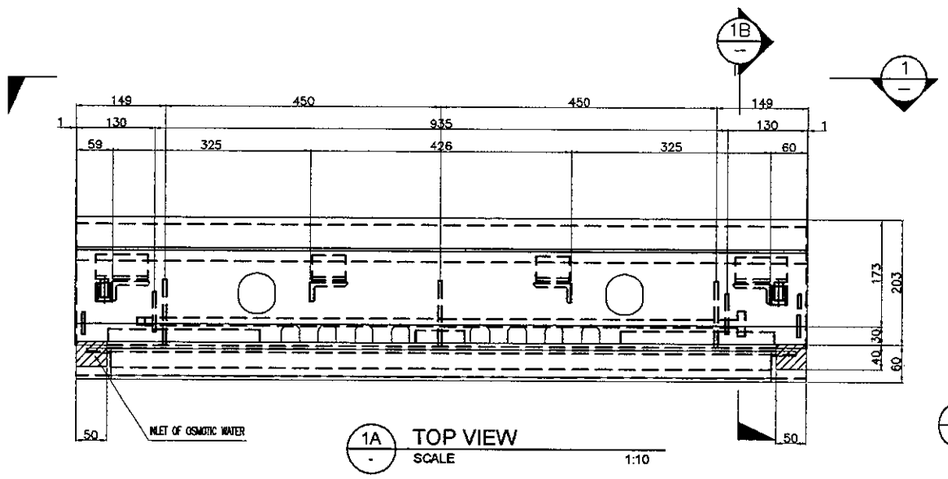

1A TOP VIEW
SCALE 1:10

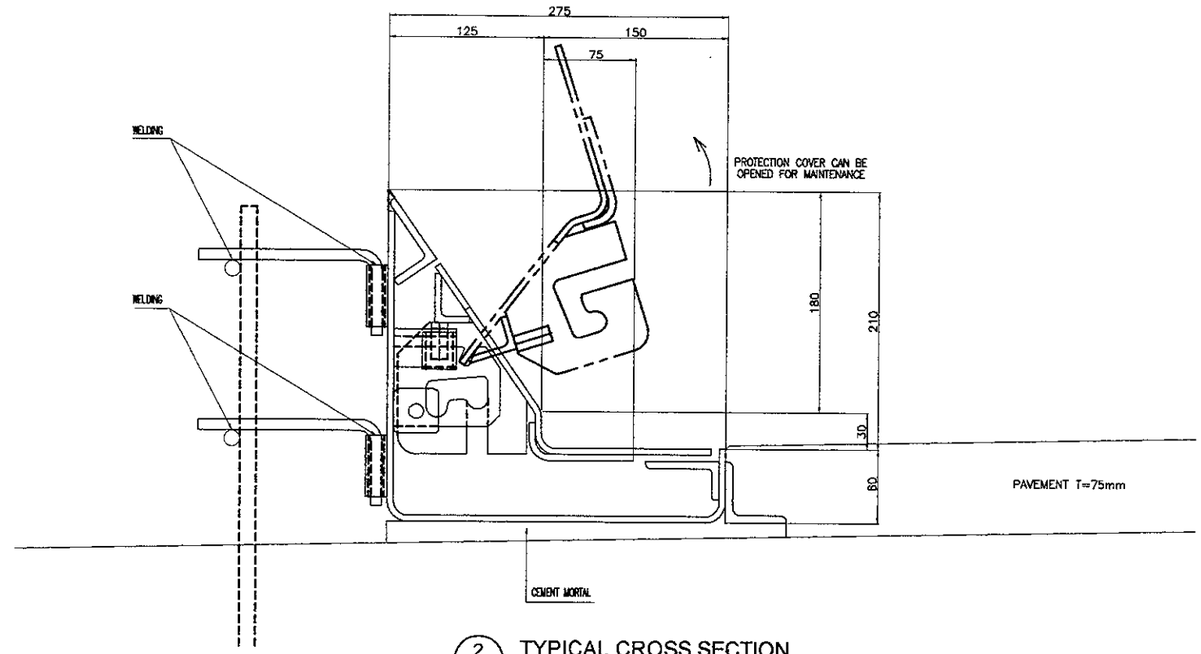

2 TYPICAL CROSS SECTION
SCALE 1:5

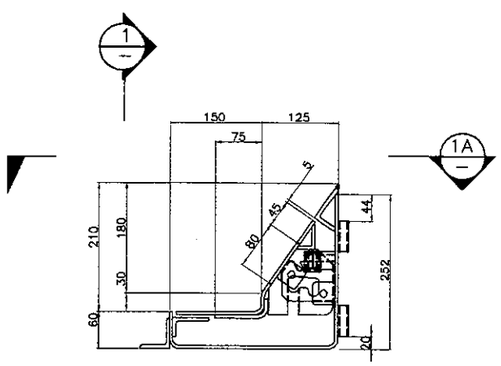

1B SECTION 1B
SCALE 1:10

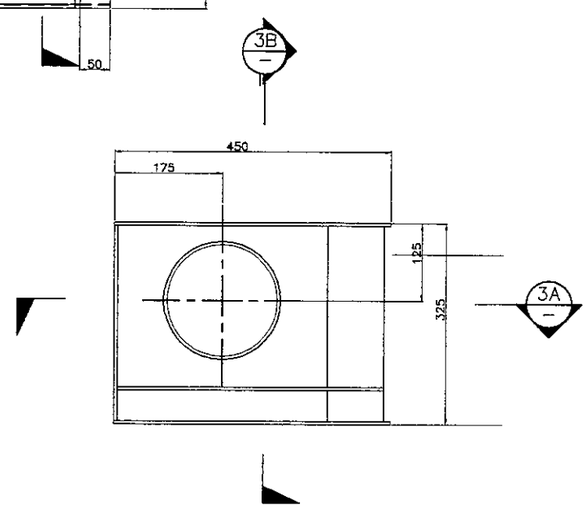

3 STEEL GUTTER DOWNSPOUT
SCALE 1:10

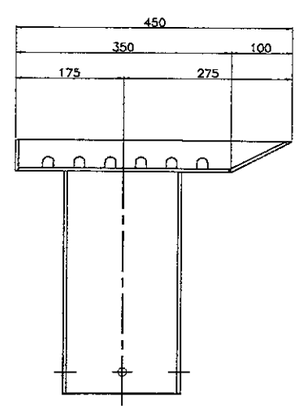

3A SECTION 3A
SCALE 1:10

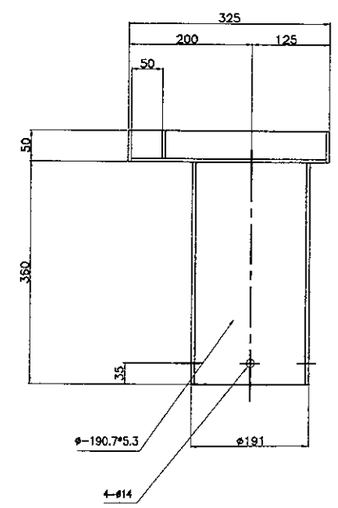

3B SECTION 3B
SCALE 1:10

JICA JAPAN INTERNATIONAL COOPERATION AGENCY / KATAHIRA & ENGINEERS INTERNATIONAL	DESIGNED BY	CHECKED BY	SUBMITTED BY	REPUBLIC OF INDONESIA MINISTRY OF PUBLIC WORKS DIRECTORATE GENERAL OF HIGHWAYS	PROJECT AND LOCATION :	SCALE :	DRAWING TITLE :	DRAWING NO :
	Name: R. UENO	Name: T. OKUMURA	Name: M. KIUCHI		DETAILED DESIGN STUDY OF NORTH JAVA CORRIDOR FLYOVER PROJECT GEBANG FLYOVER - CONTRACT PACKAGE 2 (NAGREG - GEBANG) WEST JAVA PROVINCE	1 : 20 / 1 : 100	TYPICAL DETAILS OF DECK DRAIN AND DS-5 AT APPROACH	GDV - 043
	Sign	Sign	Sign	APPROVED BY: Ir. HERRY VAZA M.Eng.Sc, NIP. : 110038400		FULL SIZE A3		SHEET NO : 43 / 43
	Date	Date	Date	Sign / Date				

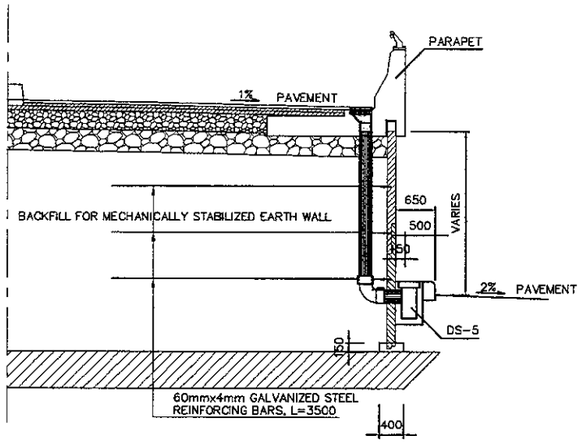

1A ELEVATION
SCALE 1:100

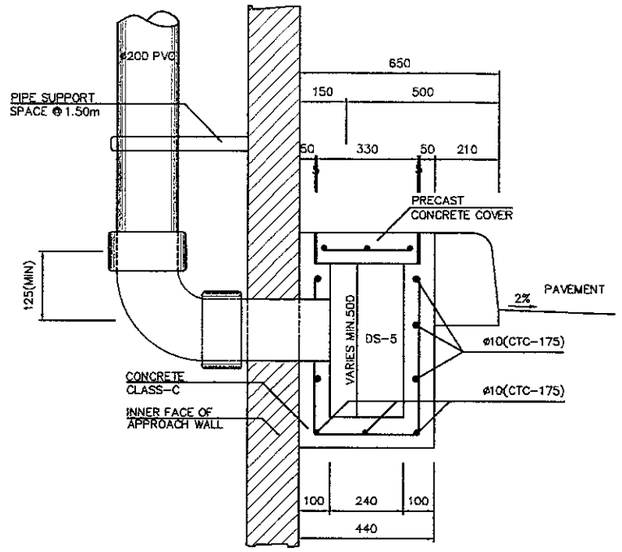

2A DS-5 DETAILS
SCALE 1:20

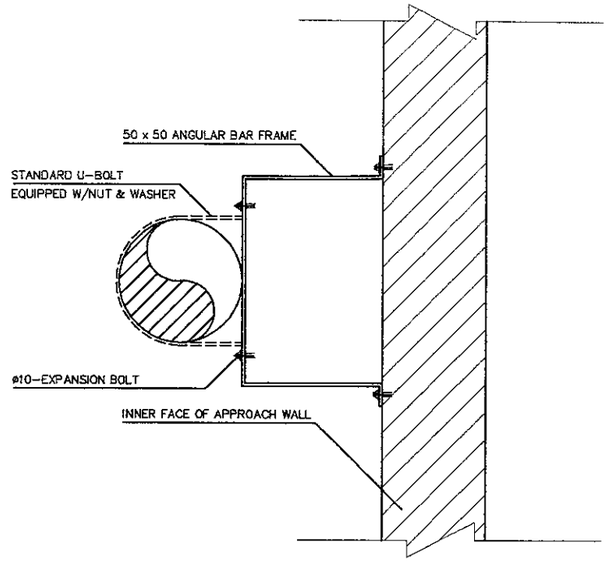

3 PIPE SUPPORT DETAIL
NO TO SCALE

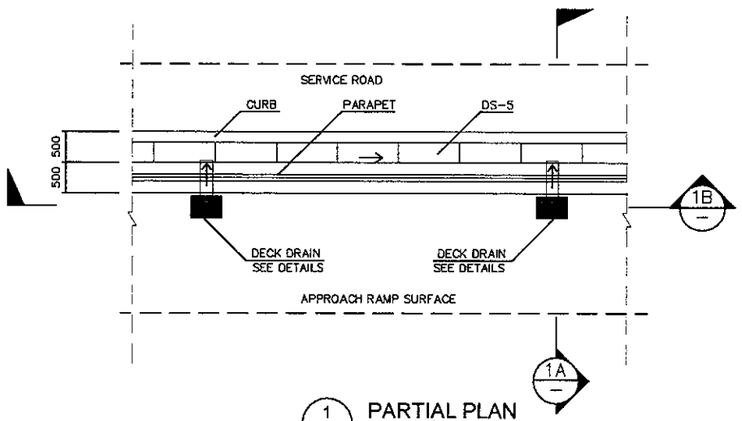

1 PARTIAL PLAN
SCALE 1:100

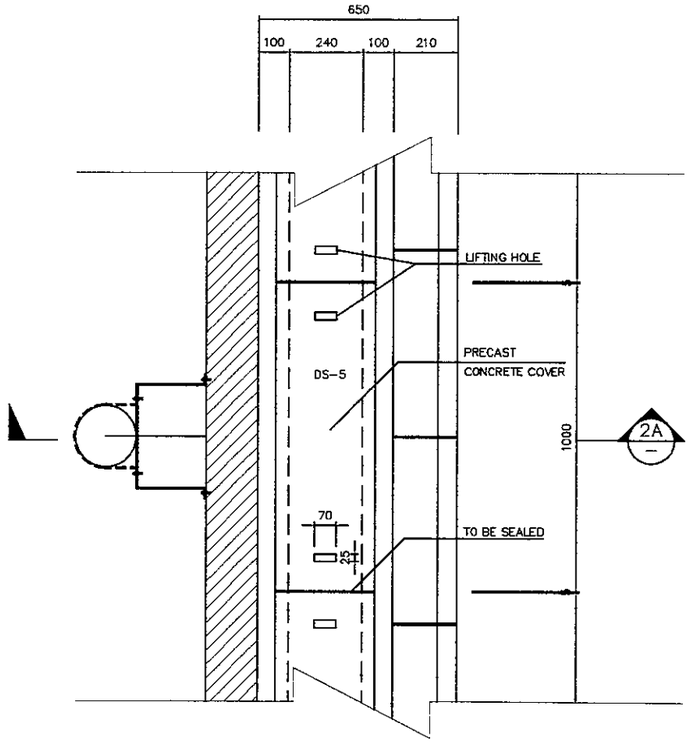

2 PLAN
SCALE 1:20

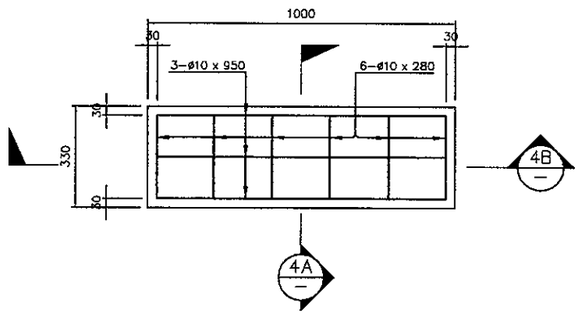

4 PLAN AT DS-5 COVER
SCALE 1:20

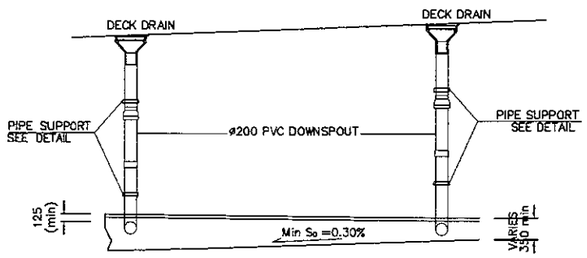

1B SECTION
SCALE 1:100

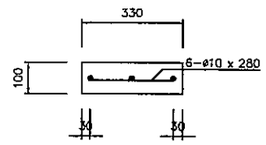

4A SECTION
SCALE 1:20

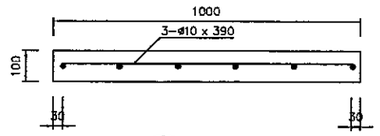

4B SECTION
SCALE 1:20

PRINTED: OCT. 19, 2006

JAPAN INTERNATIONAL
COOPERATION AGENCY

DIRECTORATE GENERAL OF HIGHWAY
MINISTRY OF PUBLIC WORKS
REPUBLIC OF INDONESIA

STRUCTURES

KATAHIRA & ENGINEERS INTERNATIONAL

JAPAN INTERNATIONAL
COOPERATION AGENCY

DIRECTORATE GENERAL OF HIGHWAY
MINISTRY OF PUBLIC WORKS
REPUBLIC OF INDONESIA

STEEL SUPERSTRUCTURE

KATAHIRA & ENGINEERS INTERNATIONAL

JAPAN INTERNATIONAL COOPERATION AGENCY KATAHIRA & ENGINEERS INTERNATIONAL	DESIGNED BY	CHECKED BY	SUBMITTED BY	REPUBLIC OF INDONESIA MINISTRY OF PUBLIC WORKS DIRECTORATE GENERAL OF HIGHWAYS	PROJECT AND LOCATION :	SCALE :	DRAWING TITLE :	DRAWING NO :
	Name: S. MATSUI	Name: T. OKUMURA	Name: M. KIUCHI	APPROVED BY: Ir. HERRY VAZA M,Eng.Sc NIP. : 110038400	DETAILED DESIGN STUDY OF NORTH JAVA CORRIDOR FLYOVER PROJECT GEBANG FLYOVER - CONTRACT PACKAGE 2 (NAGREG - GEBANG) WEST JAVA PROVINCE	1 : 400 1 : 100 FULL SIZE A3	GENERAL DIMENSION OF STEEL SUPERSTRUCTURE (1 OF 6)	GST-001
	Sign	Sign	Sign	Sign				SHEET NO :
	Date	Date	Date	Date				01 / 76

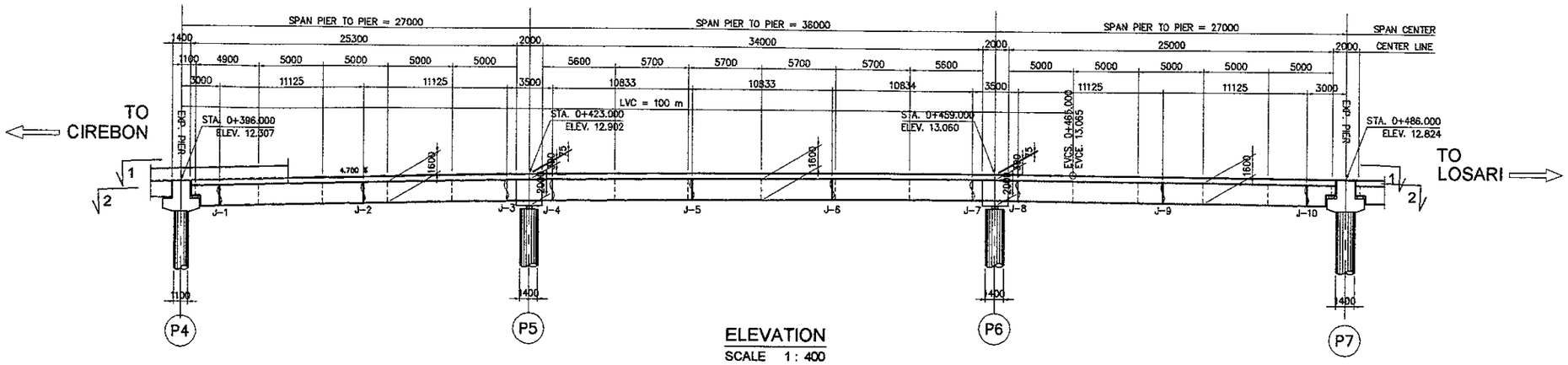

ELEVATION
SCALE 1 : 400

SECTION 1-1
SCALE 1 : 400

SECTION 2-2
SCALE 1 : 400

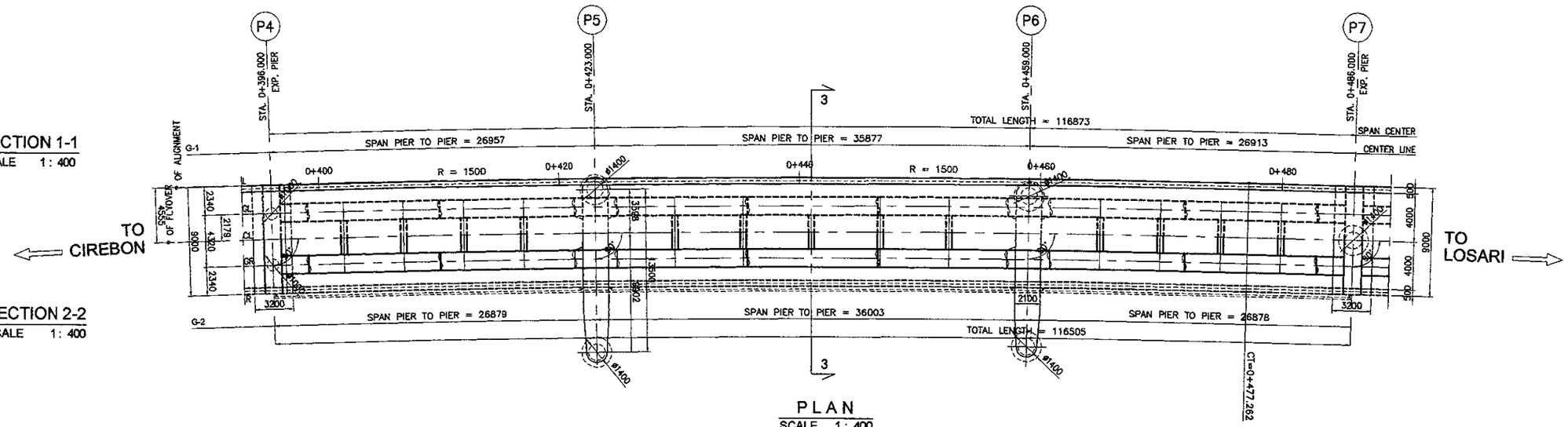

PLAN
SCALE 1 : 400

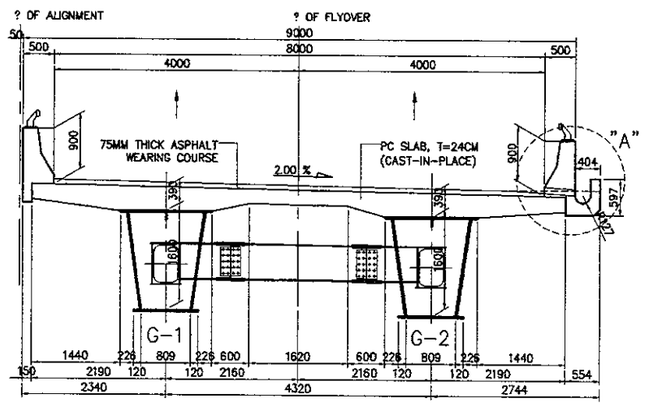

SECTION 3-3
SCALE 1 : 100

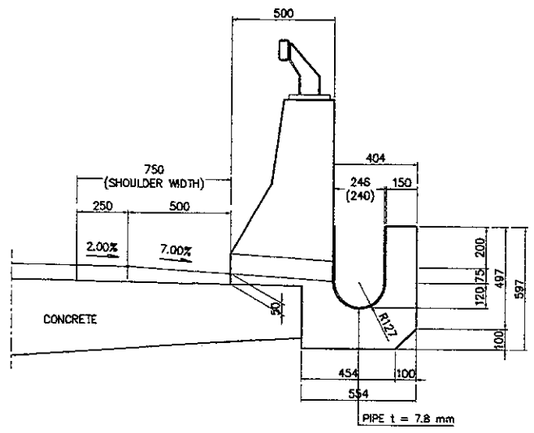

OUTER GUTTER (DETAIL - A)
SCALE 1 : 30

JAPAN INTERNATIONAL COOPERATION AGENCY	DESIGNED BY	CHECKED BY	SUBMITTED BY	REPUBLIC OF INDONESIA MINISTRY OF PUBLIC WORKS DIRECTORATE GENERAL OF HIGHWAYS	PROJECT AND LOCATION :	SCALE :	DRAWING TITLE :	DRAWING NO :
KATAHIRA & ENGINEERS INTERNATIONAL	Name: S. MATSUI	Name: T. OKUMURA	Name: M. KIUCHI		DETAILED DESIGN STUDY OF NORTH JAVA CORRIDOR FLYOVER PROJECT GEBANG FLYOVER - CONTRACT PACKAGE 2 (NAGREG - GEBANG) WEST JAVA PROVINCE	1 : 400 1 : 100	GENERAL DIMENSION OF STEEL SUPERSTRUCTURE (2 OF 6)	GST-002
	Sign	Sign	Sign	APPROVED BY: Ir. HERRY VAZA M,Eng.Sc NIP. : 110038400				SHEET NO :
	Date	Date	Date	Sign / Date		FULL SIZE A3		02 / 76

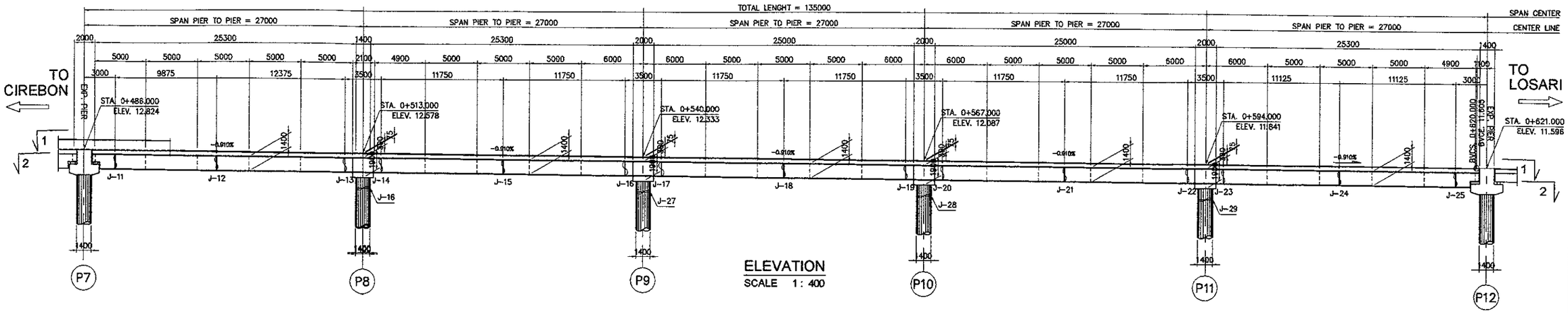

ELEVATION
SCALE 1 : 400

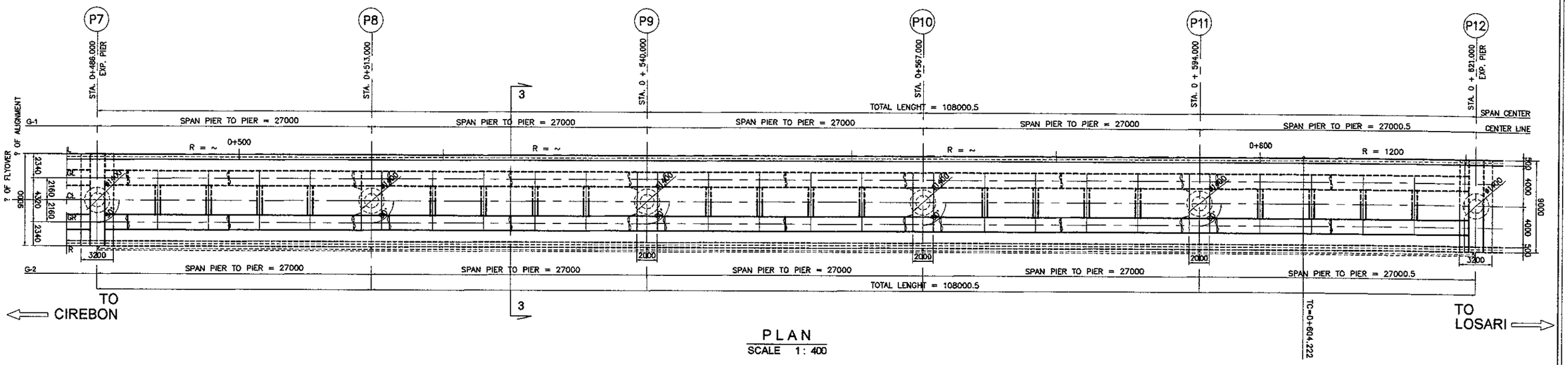

PLAN
SCALE 1 : 400

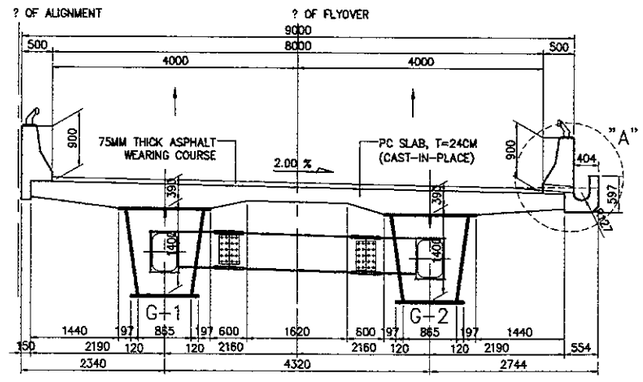

SECTION 3-3
SCALE 1 : 100

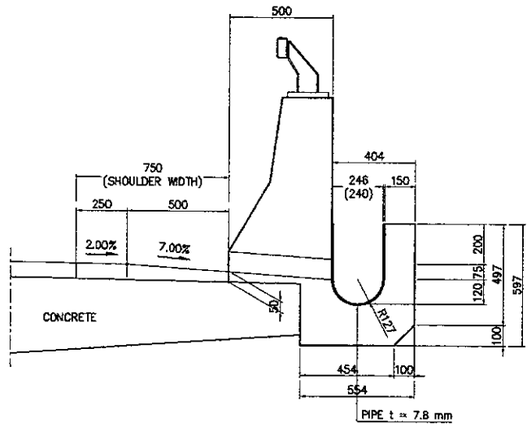

OUTER GUTTER (DETAIL - A)
SCALE 1 : 30

JICA JAPAN INTERNATIONAL COOPERATION AGENCY	DESIGNED BY	CHECKED BY	SUBMITTED BY	REPUBLIC OF INDONESIA MINISTRY OF PUBLIC WORKS DIRECTORATE GENERAL OF HIGHWAYS	PROJECT AND LOCATION :	SCALE :	DRAWING TITLE :	DRAWING NO :
KEI KATAHIRA & ENGINEERS INTERNATIONAL	Name: S. MATSUI	Name: T. OKUMURA	Name: M. KIUCHI		DETAILED DESIGN STUDY OF NORTH JAVA CORRIDOR FLYOVER PROJECT GEBANG FLYOVER - CONTRACT PACKAGE 2 (NAGREG - GEBANG) WEST JAVA PROVINCE	1 : 400 1 : 100	GENERAL DIMENSION OF STEEL SUPERSTRUCTURE (3 OF 6)	GST-003
	Sign	Sign	Sign	APPROVED BY: Ir. HERRY VAZA M.Eng.Sc NIP. : 110038400 — Sign		FULL SIZE A3		SHEET NO : 03 / 76
	Date	Date	Date	Date				

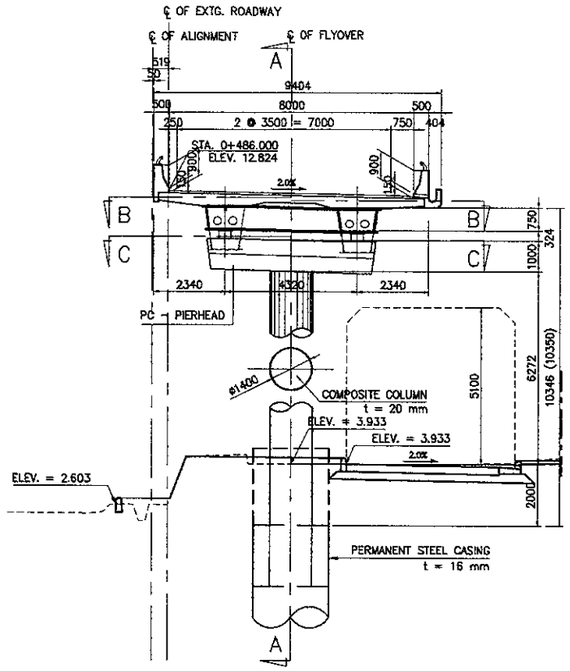

SECTION OF PIER - 5
SCALE 1 : 200

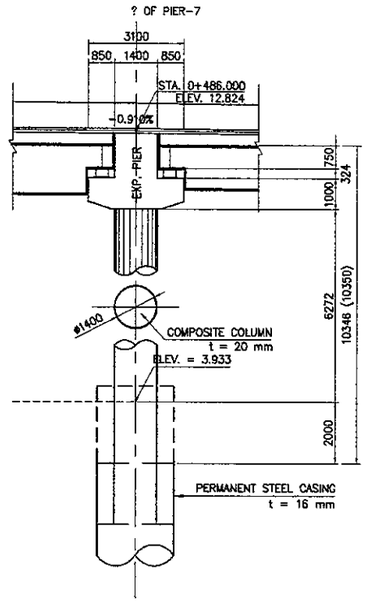

SECTION A-A
SCALE 1 : 200

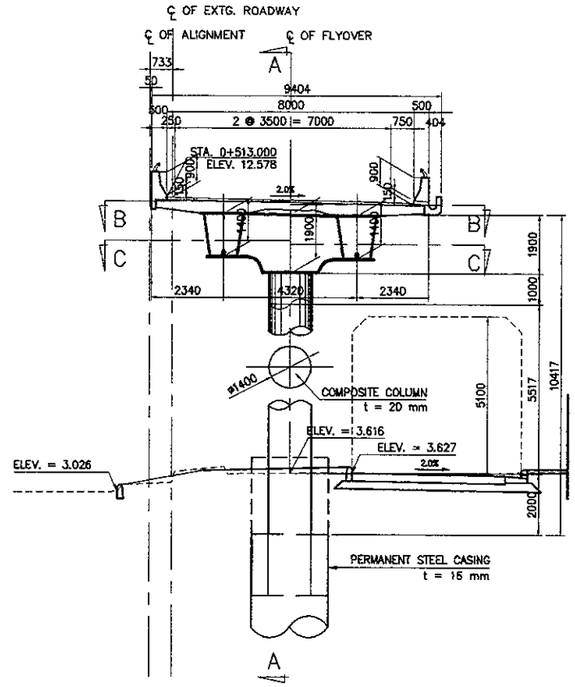

SECTION OF PIER - 6
SCALE 1 : 200

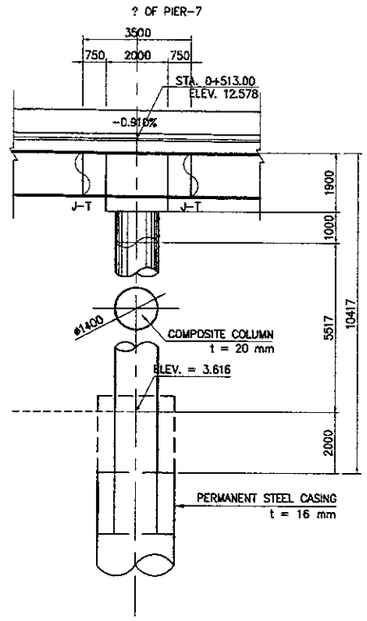

SECTION A-A
SCALE 1 : 200

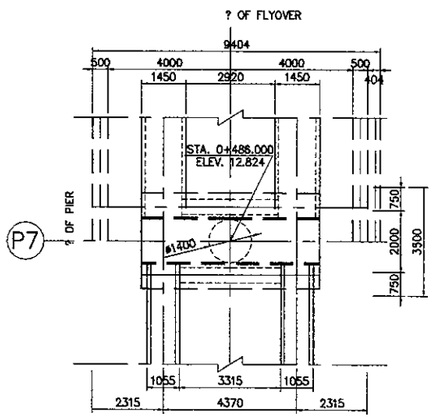

SECTION B-B
SCALE 1 : 200

SECTION C-C
SCALE 1 : 200

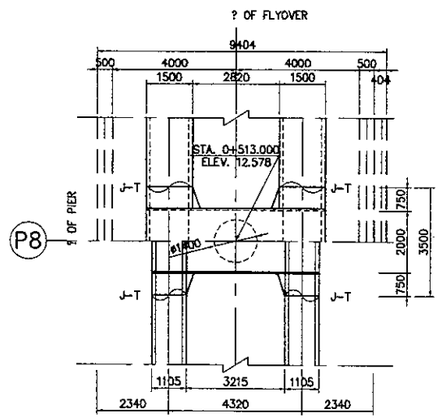

SECTION B-B
SCALE 1 : 200

SECTION C-C
SCALE 1 : 200

JAPAN INTERNATIONAL COOPERATION AGENCY KATAHIRA & ENGINEERS INTERNATIONAL	DESIGNED BY	CHECKED BY	SUBMITTED BY	REPUBLIC OF INDONESIA MINISTRY OF PUBLIC WORKS DIRECTORATE GENERAL OF HIGHWAYS	PROJECT AND LOCATION :	SCALE :	DRAWING TITLE :	DRAWING NO :
	Name: S. MATSUI	Name: T. OKUMURA	Name: M. KIUCHI		DETAILED DESIGN STUDY OF NORTH JAVA CORRIDOR FLYOVER PROJECT GEBANG FLYOVER - CONTRACT PACKAGE 2 (NAGREG - GEBANG) WEST JAVA PROVINCE	1 : 400 1 : 100	GENERAL DIMENSION OF STEEL SUPERSTRUCTURE (4 PF 6)	GST-004
	Sign	Sign	Sign	APPROVED BY: Ir. HERRY VAZA M,Eng.Sc NIP. : 110038400 — Sign		FULL SIZE A3		SHEET NO : 04 / 76
	Date	Date	Date	Date				

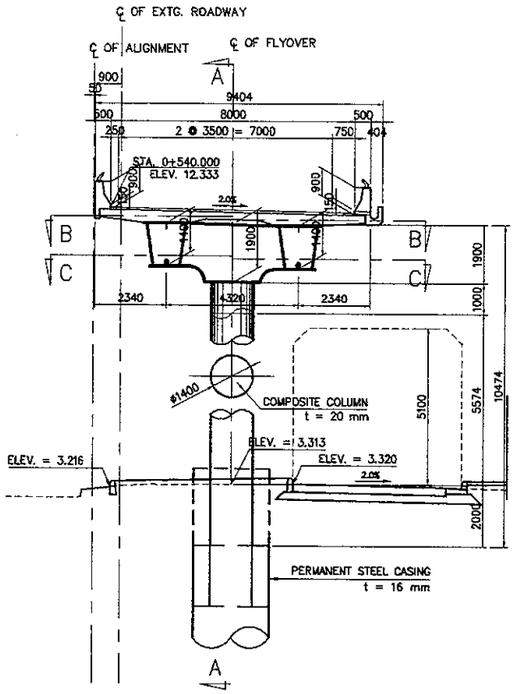

SECTION OF PIER - 7
SCALE 1 : 200

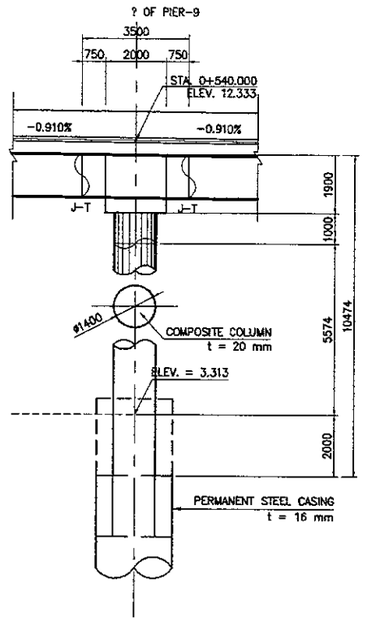

SECTION A-A
SCALE 1 : 200

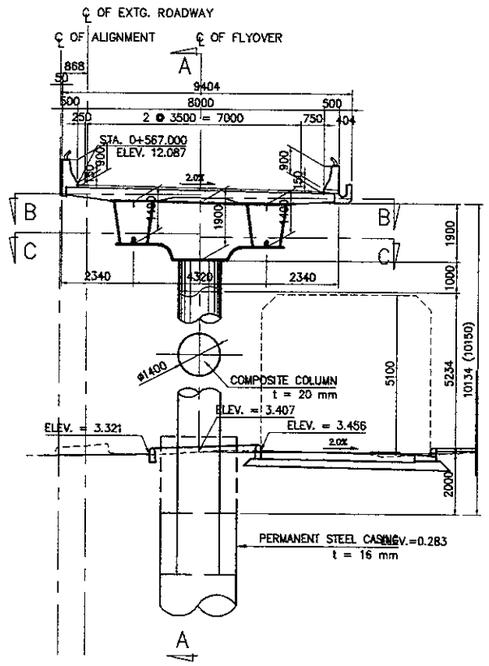

SECTION OF PIER - 8
SCALE 1 : 200

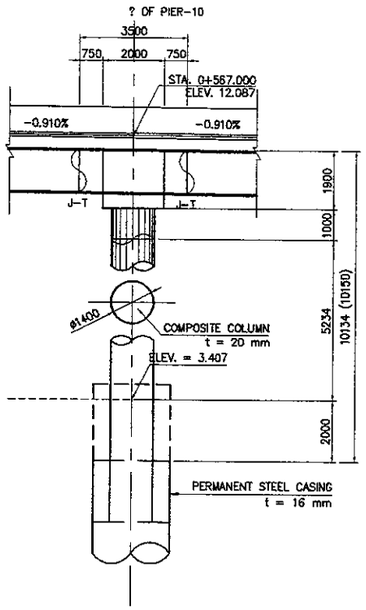

SECTION A-A
SCALE 1 : 200

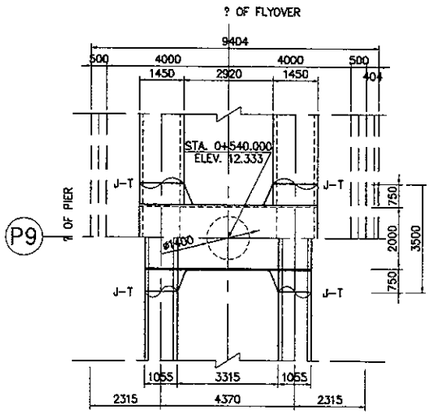

SECTION B-B
SCALE 1 : 200

SECTION C-C
SCALE 1 : 200

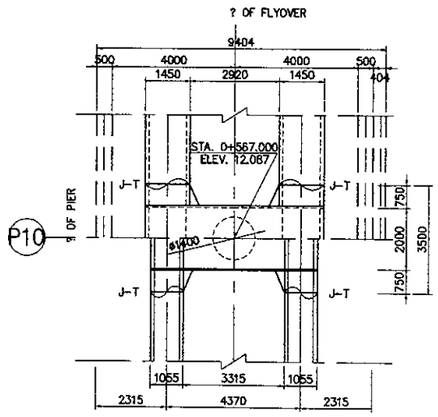

SECTION B-B
SCALE 1 : 200

SECTION C-C
SCALE 1 : 200

JAPAN INTERNATIONAL COOPERATION AGENCY KATAHIRA & ENGINEERS INTERNATIONAL	DESIGNED BY	CHECKED BY	SUBMITTED BY	REPUBLIC OF INDONESIA MINISTRY OF PUBLIC WORKS DIRECTORATE GENERAL OF HIGHWAYS	PROJECT AND LOCATION :	SCALE :	DRAWING TITLE :	DRAWING NO :
	Name S. MATSUI	Name T. OKUMURA	Name M. KIUCHI		DETAILED DESIGN STUDY OF NORTH JAVA CORRIDOR FLYOVER PROJECT GEBANG FLYOVER - CONTRACT PACKAGE 2 (NAGREG - GEBANG) WEST JAVA PROVINCE	1 : 400 1 : 100	GENERAL DIMENSION OF STEEL SUPERSTRUCTURE (5 OF 6)	GST-005
	Sign	Sign	Sign	APPROVED BY Ir. HERRY VAZA M,Eng.Sc NIP. : 110038400 Sign		FULL SIZE A3		SHEET NO :
	Date	Date	Date	Date				05 / 76

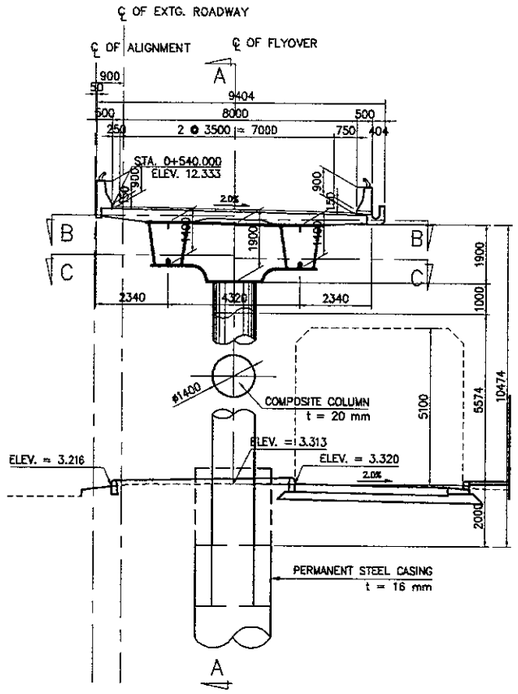

SECTION OF PIER - 9
SCALE 1 : 200

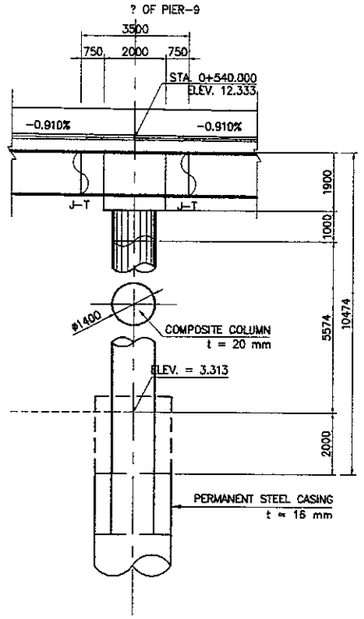

SECTION A-A
SCALE 1 : 200

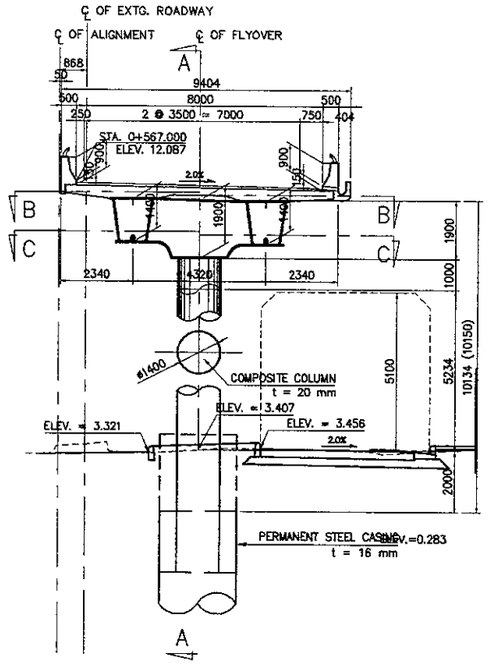

SECTION OF PIER - 10
SCALE 1 : 200

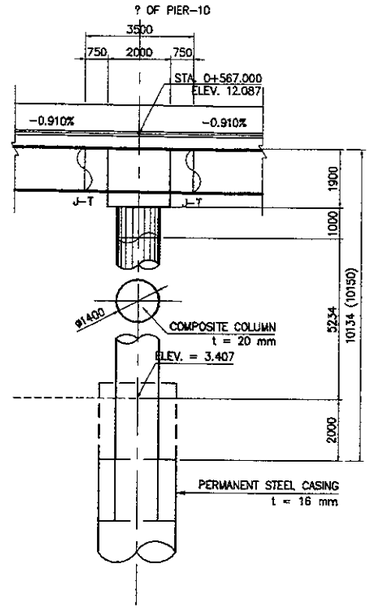

SECTION A-A
SCALE 1 : 200

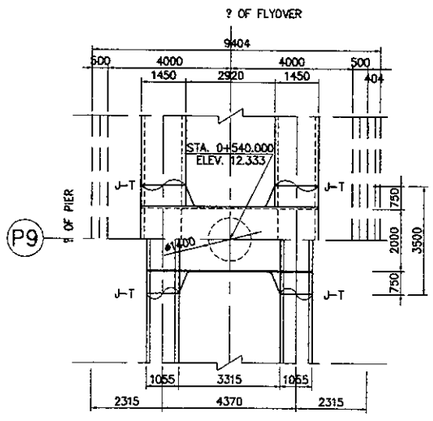

SECTION B-B
SCALE 1 : 200

SECTION C-C
SCALE 1 : 200

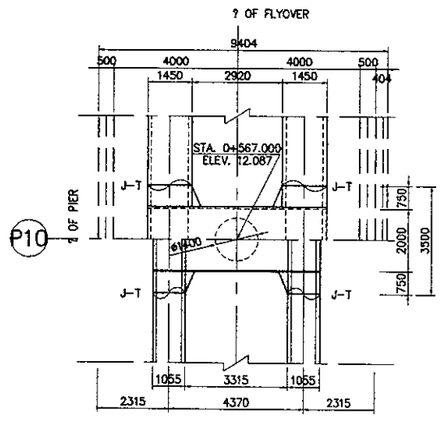

SECTION B-B
SCALE 1 : 200

SECTION C-C
SCALE 1 : 200

JICA JAPAN INTERNATIONAL COOPERATION AGENCY / KEI KATAHIRA & ENGINEERS INTERNATIONAL	DESIGNED BY	CHECKED BY	SUBMITTED BY	REPUBLIC OF INDONESIA MINISTRY OF PUBLIC WORKS DIRECTORATE GENERAL OF HIGHWAYS	PROJECT AND LOCATION :	SCALE :	DRAWING TITLE :	DRAWING NO :
	Name: S. MATSUI	Name: T. OKUMURA	Name: M. KIUCHI		DETAILED DESIGN STUDY OF NORTH JAVA CORRIDOR FLYOVER PROJECT GEBANG FLYOVER - CONTRACT PACKAGE 2 (NAGREG - GEBANG) WEST JAVA PROVINCE	1 : 400 1 : 100	GENERAL DIMENSION OF STEEL SUPERSTRUCTURE (6 OF 6)	GST-006
	Sign	Sign	Sign	APPROVED BY: ir. HERRY VAZA M,Eng.Sc NIP. : 110038400 — Sign		FULL SIZE A3		SHEET NO : 06 / 76
	Date	Date	Date	Date				

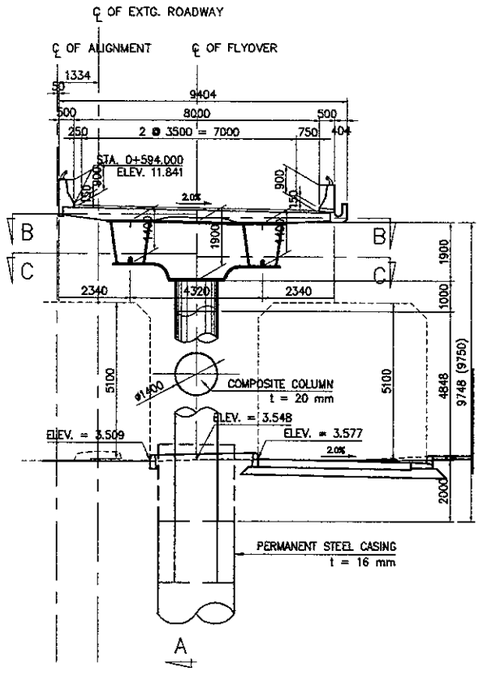

SECTION OF PIER - 11
SCALE 1 : 200

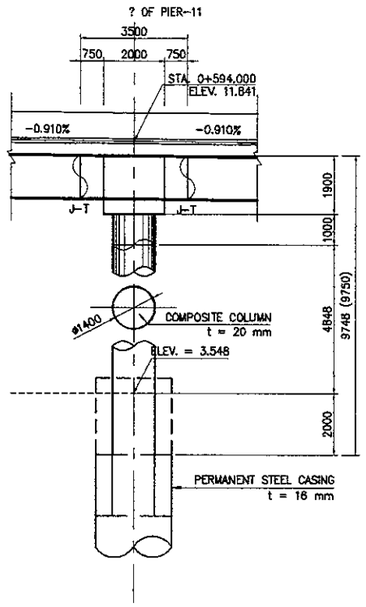

SECTION A-A
SCALE 1 : 200

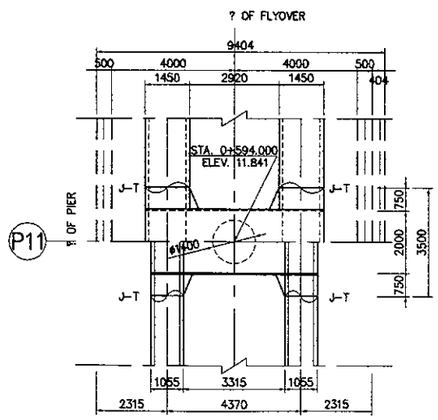

SECTION B-B
SCALE 1 : 200

SECTION C-C
SCALE 1 : 200

JICA JAPAN INTERNATIONAL COOPERATION AGENCY / KEI KATAHIRA & ENGINEERS INTERNATIONAL	DESIGNED BY	CHECKED BY	SUBMITTED BY	REPUBLIC OF INDONESIA MINISTRY OF PUBLIC WORKS DIRECTORATE GENERAL OF HIGHWAYS	PROJECT AND LOCATION :	SCALE :	DRAWING TITLE :	DRAWING NO :
	Name: S. MATSUI	Name: T. OKUMURA	Name: M. KIUCHI		DETAILED DESIGN STUDY OF NORTH JAVA CORRIDOR FLYOVER PROJECT GEBANG FLYOVER - CONTRACT PACKAGE 2 (NAGREG - GEBANG) WEST JAVA PROVINCE	1 : 200 1 : 400	COORDINATES AND ELEVATION P4-P7	GST-007
	Sign	Sign	Sign	APPROVED BY: Ir. HERRY VAZA M,Eng.Sc NIP. : 110038400				SHEET NO :
	Date	Date	Date	Sign / Date		FULL SIZE A3		07 / 76

COORDINATES AND ELEVATION

LINE \ SECTION		P4	GE1	S1	C1	C2	C3	C4	P5B	P5	P5A	C5	C6	C7	C8	C9	P6B	P6	P6A	C10	C11	C12	C13	S2	GE2	P7
CL	X	0.0000	0.7497	1.0995	5.9977	10.9952	15.9952	20.9944	25.9939	26.9938	27.9938	33.5935	39.2935	44.9934	50.6934	56.3933	61.9930	62.9930	63.9929	68.9924	73.9916	78.9904	83.9890	88.8875	89.2374	89.9872
	Y	0.0000	0.0221	0.0323	0.1663	0.2865	0.3901	0.4770	0.5473	0.5593	0.5707	0.6221	0.6530	0.6622	0.6498	0.6157	0.5611	0.5491	0.5365	0.4635	0.3737	0.2673	0.1467	0.0269	0.0183	0.0000
	Z	12.3074	12.3295	12.3397	12.4750	12.5992	12.7094	12.8056	12.8877	12.9024	12.9166	12.9857	13.0379	13.0719	13.0877	13.0852	13.0650	13.0596	13.0536	13.0151	12.9696	12.9241	12.8786	12.8340	12.8309	12.8240
L1	X	0.0015	0.7512	1.1010	5.9990	10.9974	15.9961	20.9952	25.9945	26.9944	27.9944	33.5939	39.2936	44.9934	50.6932	56.3929	61.9924	62.9924	63.9923	68.9915	73.9906	78.9893	83.9877	88.8863	89.2362	89.9859
	Y	−0.0500	−0.0279	−0.0177	0.1163	0.2365	0.3401	0.4270	0.4973	0.5093	0.5207	0.5721	0.6030	0.6122	0.5998	0.5657	0.5111	0.4992	0.4865	0.4135	0.3237	0.2173	0.0988	−0.0231	−0.0316	−0.0500
	Z	13.1254	13.1475	13.1577	13.2930	13.4172	13.5274	13.6236	13.7057	13.7204	13.7346	13.8037	13.8559	13.8899	13.9057	13.9032	13.8830	13.8776	13.8716	13.8331	13.7876	13.7421	13.6966	13.6520	13.6489	13.6420
L2	X	0.0059	0.7556	1.1055	6.0028	11.0007	15.9990	20.9976	25.9963	26.9962	27.9961	33.5950	39.2942	44.9934	50.6926	56.3917	61.9906	62.9905	63.9904	68.9891	73.9876	78.9858	83.9841	88.8826	89.2325	89.9823
	Y	−0.1999	−0.1778	−0.1676	−0.0337	0.0866	0.1901	0.2770	0.3473	0.3593	0.3707	0.4221	0.4530	0.4622	0.4498	0.4157	0.3611	0.3492	0.3365	0.2635	0.1738	0.0674	−0.0532	−0.1730	−0.1816	−0.1999
	Z	12.2254	12.2475	12.2577	12.3930	12.5172	12.6274	12.7236	12.8057	12.8204	12.8346	12.9037	12.9559	12.9899	13.0057	13.0032	12.9830	12.9776	12.9716	12.9331	12.8876	12.8421	12.7966	12.7520	12.7489	12.7420
L3	X	0.0163	0.7660	1.1159	6.0118	11.0086	16.0056	21.0031	26.0004	27.0003	28.0002	33.5976	39.2954	44.9933	50.6912	56.3890	61.9863	62.9862	63.9861	68.9834	73.9808	78.9778	83.9755	88.8740	89.2239	89.9737
	Y	−0.5498	−0.5277	−0.5175	−0.3835	−0.2633	−0.1598	−0.0729	−0.0027	0.0094	0.0207	0.0722	0.1030	0.1122	0.0998	0.0657	0.0111	−0.0008	−0.0134	−0.0865	−0.1762	−0.2825	−0.4031	−0.5229	−0.5315	−0.5498
	Z	12.3074	12.3295	12.3397	12.4750	12.5992	12.7094	12.8056	12.8877	12.9024	12.9166	12.9857	13.0379	13.0719	13.0877	13.0852	13.0650	13.0596	13.0536	13.0151	12.9696	12.9241	12.8786	12.8340	12.8309	12.8240
G1L	X	0.0523	0.8020	1.1518	6.0429	11.0356	16.0287	21.0221	28.0145	27.0145	28.0144	33.6064	39.2996	44.9929	50.6862	56.3794	61.9714	62.9714	63.9713	68.9637	73.9570	78.9500	83.9459	88.8445	89.1944	89.9441
	Y	−1.7592	−1.7371	−1.7269	−1.5931	−1.4730	−1.3696	−1.2828	−1.2126	−1.2006	−1.1892	−1.1378	−1.1070	−1.0978	−1.1102	−1.1443	−1.1988	−1.2107	−1.2233	−1.2963	−1.3859	−1.4922	−1.6127	−1.7326	−1.7411	−1.7595
	Z	12.2832	12.3053	12.3155	12.4508	12.5750	12.6852	12.7814	12.8635	12.8782	12.8924	12.9615	13.0137	13.0477	13.0635	13.0610	13.0408	13.0354	13.0294	12.9909	12.9454	12.8999	12.8544	12.8098	12.8067	12.7998
G1	X	0.0710	0.8207	1.1705	6.0591	11.0497	16.0407	21.0320	28.0219	27.0218	28.0218	33.6110	39.3019	44.9928	50.6837	56.3745	61.9637	62.9636	63.9635	68.9534	73.9447	78.9356	83.9305	88.8290	89.1789	89.9287
	Y	−2.3889	−2.3668	−2.3567	−2.2229	−2.1029	−1.9995	−1.9127	−1.8426	−1.8305	−1.8191	−1.7678	−1.7370	−1.7278	−1.7402	−1.7742	−1.8287	−1.8407	−1.8533	−1.9262	−2.0158	−2.1221	−2.2425	−2.3624	−2.3709	−2.3893
	Z	12.2706	12.2927	12.3029	12.4382	12.5624	12.6726	12.7688	12.8509	12.8656	12.8798	12.9489	13.0011	13.0351	13.0509	13.0484	13.0282	13.0228	13.0168	12.9783	12.9328	12.8873	12.8418	12.7972	12.7941	12.7872
G1R	X	0.0897	0.8394	1.1893	6.0753	11.0638	16.0527	21.0419	26.0293	27.0292	28.0292	33.6156	39.3041	44.9926	50.6811	56.3695	61.9560	62.9559	63.9556	68.9432	73.9323	78.9211	83.9151	88.8136	89.1635	89.9133
	Y	−3.0187	−2.9966	−2.9864	−2.8527	−2.7327	−2.6293	−2.5426	−2.4725	−2.4605	−2.4491	−2.3978	−2.3670	−2.3578	−2.3702	−2.4042	−2.4587	−2.4706	−2.4832	−2.5561	−2.6457	−2.7519	−2.8724	−2.9922	−3.0008	−3.0191
	Z	12.2580	12.2801	12.2903	12.4256	12.5498	12.6600	12.7562	12.8383	12.8530	12.8672	12.9363	12.9885	13.0225	13.0383	13.0358	13.0157	13.0102	13.0042	12.9657	12.9202	12.8747	12.8292	12.7846	12.7815	12.7746
LCL	X	0.1352	0.8849	1.2347	6.1147	11.0981	16.0818	21.0659	26.0472	27.0472	28.0471	33.6268	39.3095	44.9922	50.6748	56.3575	61.9372	62.9371	63.9370	68.9183	73.9023	78.8860	83.8777	88.7762	89.1261	89.8759
	Y	−4.5480	−4.5259	−4.5157	−4.3822	−4.2623	−4.1591	−4.0724	−4.0024	−3.9904	−3.9790	−3.9277	−3.8970	−3.8878	−3.9002	−3.9342	−3.9886	−4.0005	−4.0131	−4.0859	−4.1754	−4.2815	−4.4019	−4.5217	−4.5303	−4.5486
	Z	12.2274	12.2496	12.2598	12.3950	12.5192	12.6294	12.7256	12.8076	12.8224	12.8367	12.9057	12.9579	12.9919	13.0077	13.0052	12.9851	12.9796	12.9736	12.9351	12.8896	12.8441	12.7986	12.7540	12.7509	12.7440
G2L	X	0.1807	0.9303	1.2802	6.1540	11.1323	16.1110	21.0900	26.0652	27.0651	28.0550	33.6380	39.3148	44.9917	50.6686	56.3454	61.9184	62.9183	63.9182	68.8934	73.8723	78.8509	83.8403	88.7388	89.0887	89.8385
	Y	−6.0773	−6.0552	−6.0450	−5.9117	−5.7920	−5.6888	−5.6022	−5.5323	−5.5203	−5.5089	−5.4577	−5.4269	−5.4178	−5.4302	−5.4641	−5.5184	−5.5304	−5.5430	−5.6157	−5.7051	−5.8111	−5.9314	−6.0513	−6.0598	−6.0782
	Z	12.1968	12.2190	12.2292	12.3644	12.4886	12.5988	12.6950	12.7770	12.7918	12.8061	12.8751	12.9273	12.9613	12.9771	12.9746	12.9545	12.9490	12.9430	12.9045	12.8590	12.8135	12.7680	12.7234	12.7203	12.7134
G2	X	0.1994	0.9490	1.2989	6.1702	11.1464	16.1230	21.0999	26.0725	27.0725	28.0724	33.6426	39.3171	44.9915	50.6660	56.3404	61.9106	62.9106	63.9105	68.8831	73.8599	78.8364	83.8249	88.7234	89.0733	89.8231
	Y	−6.7070	−6.6849	−6.6748	−6.5415	−6.4218	−6.3187	−6.2322	−6.1623	−6.1502	−6.1388	−6.0877	−6.0569	−6.0478	−6.0602	−6.0941	−6.1484	−6.1603	−6.1730	−6.2457	−6.3350	−6.4409	−6.5613	−6.6811	−6.6897	−6.7080
	Z	12.1842	12.2064	12.2166	12.3518	12.4760	12.5882	12.6824	12.7644	12.7792	12.7935	12.8625	12.9147	12.9487	12.9645	12.9620	12.9419	12.9364	12.9303	12.8919	12.8464	12.8009	12.7554	12.7108	12.7077	12.7008
G2R	X	0.2181	0.9678	1.3176	6.1864	11.1605	16.1350	21.1098	26.0799	27.0798	28.0798	33.6472	39.3193	44.9914	50.6635	56.3355	61.9029	62.9028	63.9027	68.8729	73.8476	78.8220	83.8095	88.7080	89.0579	89.8077
	Y	−7.3368	−7.3147	−7.3045	−7.1713	−7.0516	−6.9486	−6.8621	−6.7922	−6.7802	−6.7688	−6.7177	−6.6869	−6.6778	−6.6901	−6.7241	−6.7784	−6.7903	−6.8029	−6.8756	−6.9649	−7.0708	−7.1911	−7.3109	−7.3195	−7.3378
	Z	12.1716	12.1938	12.2040	12.3392	12.4634	12.5736	12.6698	12.7518	12.7666	12.7809	12.8499	12.9021	12.9361	12.9519	12.9494	12.9293	12.9238	12.9177	12.8793	12.8338	12.7883	12.7428	12.6982	12.6951	12.6882
R3	X	0.2540	1.0037	1.3536	6.2176	11.1876	16.1580	21.1288	26.0941	27.0940	28.0940	33.6561	39.3235	44.9910	50.6585	56.3259	61.8880	62.8880	63.8879	68.8531	73.8238	78.7942	83.7799	88.6784	89.0283	89.7781
	Y	−8.5462	−8.5241	−8.5139	−8.3809	−8.2613	−8.1583	−8.0719	−8.0021	−7.9901	−7.9787	−7.9276	−7.8969	−7.8878	−7.9001	−7.9340	−7.9883	−8.0002	−8.0128	−8.0854	−8.1746	−8.2804	−8.4007	−8.5205	−8.5291	−8.5474
	Z	12.1474	12.1696	12.1799	12.3150	12.4392	12.5494	12.6456	12.7276	12.7424	12.7567	12.8257	12.8779	12.9118	12.9277	12.9252	12.9051	12.8996	12.8935	12.8551	12.8096	12.7641	12.7186	12.6740	12.6709	12.6640
R2	X	0.2844	1.0141	1.3640	6.2266	11.1954	16.1647	21.1343	26.0982	27.0981	28.0981	33.6587	39.3248	44.9909	50.6571	56.3232	61.8837	62.8837	63.8836	68.8475	73.8170	78.7882	83.7713	88.6598	89.0197	89.7695
	Y	−8.8961	−8.8740	−8.8638	−8.7308	−8.6112	−8.5083	−8.4219	−8.3521	−8.3401	−8.3287	−8.2776	−8.2469	−8.2378	−8.2501	−8.2840	−8.3382	−8.3502	−8.3628	−8.4354	−8.5246	−8.6303	−8.7506	−8.8704	−8.8790	−8.8973
	Z	12.0654	12.0876	12.0979	12.2330	12.3572	12.4674	12.5636	12.6456	12.6604	12.6747	12.7437	12.7959	12.8299	12.8457	12.8432	12.8231	12.8176	12.8115	12.7731	12.7276	12.6821	12.6366	12.5920	12.5889	12.5820
R1	X	0.2689	1.0186	1.3684	6.2304	11.1988	16.1676	21.1366	26.1000	27.0999	28.0998	33.6598	39.3253	44.9909	50.6565	56.3220	61.8819	62.8818	63.8817	68.8450	73.8140	78.7827	83.7676	88.6682	89.0161	89.7658
	Y	−9.0460	−9.0239	−9.0137	−8.8807	−8.7612	−8.6583	−8.5719	−8.5021	−8.4901	−8.4787	−8.4276	−8.3969	−8.3878	−8.4001	−8.4340	−8.4882	−8.5002	−8.5128	−8.5853	−8.6745	−8.7803	−8.9006	−9.0204	−9.0290	−9.0473
	Z	12.9554	12.9776	12.9979	13.1330	13.2572	13.3674	13.4636	13.5456	13.5604	13.5747	13.6437	13.6959	13.7299	13.7457	13.7432	13.7231	13.7176	13.7115	13.6731	13.6276	13.5821	13.5366	13.4920	13.4889	13.4820

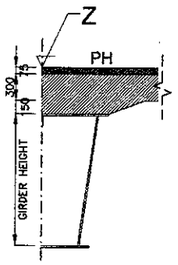

ELEVATION REFERENCE
NOT TO SCALE

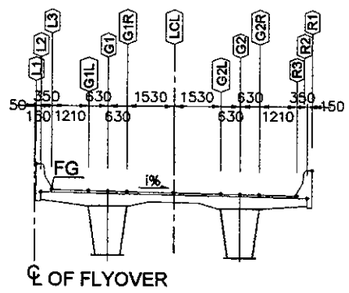

SECTION VIEW
SCALE 1:200

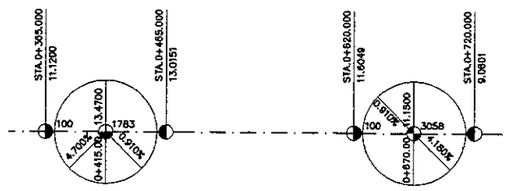

ELEMENT OF VERTICAL ALIGNMENT
NOT TO SCALE

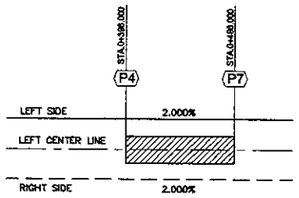

SUPER ELEVATION
NOT TO SCALE

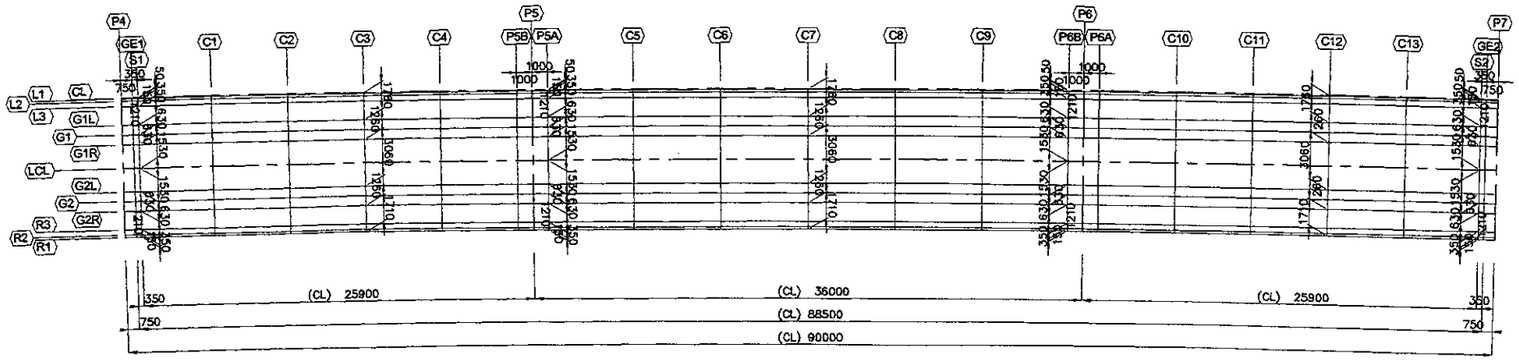

PLAN VIEW
SCALE 1:400

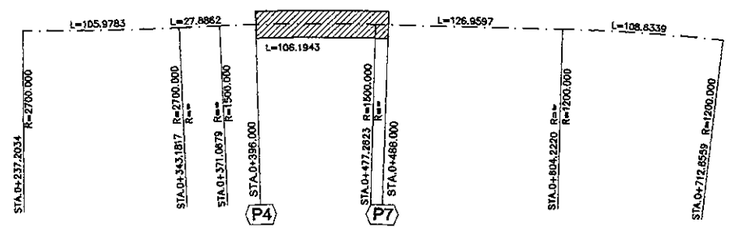

KEY PLAN

JAPAN INTERNATIONAL COOPERATION AGENCY	DESIGNED BY	CHECKED BY	SUBMITTED BY	REPUBLIC OF INDONESIA MINISTRY OF PUBLIC WORKS DIRECTORATE GENERAL OF HIGHWAYS	PROJECT AND LOCATION :	SCALE :	DRAWING TITLE :	DRAWING NO :
KATAHIRA & ENGINEERS INTERNATIONAL	Name: S. MATSUI	Name: T. OKUMURA	Name: M. KIUCHI	APPROVED BY: Ir. HERRY VAZA M,Eng.Sc NIP. : 110038400	DETAILED DESIGN STUDY OF NORTH JAVA CORRIDOR FLYOVER PROJECT GEBANG FLYOVER - CONTRACT PACKAGE 2 (NAGREG - GEBANG) WEST JAVA PROVINCE	1 : 200 1 : 400 FULL SIZE A3	COORDINATES AND ELEVATION P7-P12	GST-008
	Sign	Sign	Sign	Sign				SHEET NO :
	Date	Date	Date	Date				08 / 76

COORDINATES AND ELEVATION

SECTION / LINE		P7	GE3	S3	C1	C2	C3	C4	P8B	P8	P8A	C5	C6	C7	C8	P9B	P9	P9A	C9	C10	C11	C12	P10B	P10	P10A	C13	C14	C15	C16	P11B	P11	P11A	C17	C18	C19	C20	S4	GE4	P12
CL	X	0.0000	0.7500	1.1000	6.0000	11.0000	16.0000	21.0000	26.0000	27.0000	28.0000	33.0000	38.0000	43.0000	48.0000	53.0000	54.0000	55.0000	60.0000	65.0000	70.0000	75.0000	80.0000	81.0000	82.0000	87.0000	92.0000	97.0000	102.0000	107.0000	108.0000	109.0000	114.0000	119.0000	124.0000	128.9999	133.8998	134.2495	134.9995
	Y	0.0000	0.0000	0.0000	0.0000	0.0000	0.0000	0.0000	0.0000	0.0000	0.0000	0.0000	0.0000	0.0000	0.0000	0.0000	0.0000	0.0000	0.0000	0.0000	0.0000	0.0000	0.0000	0.0000	0.0000	0.0000	0.0000	0.0000	0.0000	0.0000	0.0000	0.0000	0.0000	-0.0003	-0.0139	-0.0484	-0.1024	-0.1070	-0.1173
	Z	12.8240	12.8172	12.8140	12.7695	12.7240	12.6785	12.6330	12.5875	12.5784	12.5693	12.5238	12.4783	12.4328	12.3873	12.3418	12.3327	12.3236	12.2782	12.2327	12.1872	12.1417	12.0962	12.0871	12.0780	12.0325	11.9870	11.9415	11.8960	11.8505	11.8415	11.8324	11.7869	11.7414	11.6959	11.6504	11.6058	11.6026	11.5956
L1	X	0.0000	0.7500	1.1000	6.0000	11.0000	16.0000	21.0000	26.0000	27.0000	28.0000	33.0000	38.0000	43.0000	48.0000	53.0000	54.0000	55.0000	60.0000	65.0000	70.0000	75.0000	80.0000	81.0000	82.0000	87.0000	92.0000	97.0000	102.0000	107.0000	108.0000	109.0000	114.0000	119.0000	123.9997	128.9994	133.8989	134.2488	134.9988
	Y	-0.0500	-0.0500	-0.0500	-0.0500	-0.0500	-0.0500	-0.0500	-0.0500	-0.0500	-0.0500	-0.0500	-0.0500	-0.0500	-0.0500	-0.0500	-0.0500	-0.0500	-0.0500	-0.0500	-0.0500	-0.0500	-0.0500	-0.0500	-0.0500	-0.0500	-0.0500	-0.0500	-0.0500	-0.0500	-0.0500	-0.0500	-0.0500	-0.0503	-0.0639	-0.0984	-0.1524	-0.1570	-0.1673
	Z	13.6420	13.6352	13.6320	13.5875	13.5420	13.4965	13.4510	13.4055	13.3964	13.3873	13.3418	13.2963	13.2508	13.2053	13.1598	13.1507	13.1416	13.0962	13.0507	13.0052	12.9597	12.9142	12.9051	12.8960	12.8505	12.8050	12.7595	12.7140	12.6685	12.6595	12.6504	12.6049	12.5594	12.5139	12.4684	12.4238	12.4206	12.4136
L2	X	0.0000	0.7500	1.1000	6.0000	11.0000	16.0000	21.0000	26.0000	27.0000	28.0000	33.0000	38.0000	43.0000	48.0000	53.0000	54.0000	55.0000	60.0000	65.0000	70.0000	75.0000	80.0000	81.0000	82.0000	87.0000	92.0000	97.0000	102.0000	107.0000	108.0000	109.0000	114.0000	118.9999	123.9990	128.9981	133.8968	134.2467	134.9967
	Y	-0.2000	-0.2000	-0.2000	-0.2000	-0.2000	-0.2000	-0.2000	-0.2000	-0.2000	-0.2000	-0.2000	-0.2000	-0.2000	-0.2000	-0.2000	-0.2000	-0.2000	-0.2000	-0.2000	-0.2000	-0.2000	-0.2000	-0.2000	-0.2000	-0.2000	-0.2000	-0.2000	-0.2000	-0.2000	-0.2000	-0.2000	-0.2000	-0.2003	-0.2139	-0.2484	-0.3024	-0.3070	-0.3173
	Z	12.7420	12.7352	12.7320	12.6875	12.6420	12.5965	12.5510	12.5055	12.4964	12.4873	12.4418	12.3963	12.3508	12.3053	12.2598	12.2507	12.2416	12.1962	12.1507	12.1052	12.0597	12.0142	12.0051	11.9960	11.9505	11.9050	11.8595	11.8140	11.7685	11.7595	11.7504	11.7049	11.6594	11.6139	11.5684	11.5238	11.5206	11.5136
L3	X	0.0000	0.7500	1.1000	6.0000	11.0000	16.0000	21.0000	26.0000	27.0000	28.0000	33.0000	38.0000	43.0000	48.0000	53.0000	54.0000	55.0000	60.0000	65.0000	70.0000	75.0000	80.0000	81.0000	82.0000	87.0000	92.0000	97.0000	102.0000	107.0000	108.0000	109.0000	114.0000	118.9998	123.9973	128.9949	133.8919	134.2418	134.9918
	Y	-0.5500	-0.5500	-0.5500	-0.5500	-0.5500	-0.5500	-0.5500	-0.5500	-0.5500	-0.5500	-0.5500	-0.5500	-0.5500	-0.5500	-0.5500	-0.5500	-0.5500	-0.5500	-0.5500	-0.5500	-0.5500	-0.5500	-0.5500	-0.5500	-0.5500	-0.5500	-0.5500	-0.5500	-0.5500	-0.5500	-0.5500	-0.5500	-0.5503	-0.5639	-0.5984	-0.6523	-0.6570	-0.6672
	Z	12.8240	12.8172	12.8140	12.7695	12.7240	12.6785	12.6330	12.5875	12.5784	12.5693	12.5238	12.4783	12.4328	12.3873	12.3418	12.3327	12.3236	12.2782	12.2327	12.1872	12.1417	12.0962	12.0871	12.0780	12.0325	11.9870	11.9415	11.8960	11.8505	11.8415	11.8324	11.7869	11.7414	11.6959	11.6504	11.6058	11.6026	11.5956
G1L	X	0.0000	0.7500	1.1000	6.0000	11.0000	16.0000	21.0000	26.0000	27.0000	28.0000	33.0000	38.0000	43.0000	48.0000	53.0000	54.0000	55.0000	60.0000	65.0000	70.0000	75.0000	80.0000	81.0000	82.0000	87.0000	92.0000	97.0000	102.0000	107.0000	108.0000	109.0000	114.0000	118.9989	123.9915	128.9840	133.8749	134.2249	134.9748
	Y	-1.7600	-1.7600	-1.7600	-1.7600	-1.7600	-1.7600	-1.7600	-1.7600	-1.7600	-1.7600	-1.7600	-1.7600	-1.7600	-1.7600	-1.7600	-1.7600	-1.7600	-1.7600	-1.7600	-1.7600	-1.7600	-1.7600	-1.7600	-1.7600	-1.7600	-1.7600	-1.7600	-1.7600	-1.7600	-1.7600	-1.7600	-1.7600	-1.7603	-1.7739	-1.8083	-1.8622	-1.8669	-1.8771
	Z	12.7998	12.7930	12.7898	12.7453	12.6998	12.6543	12.6088	12.5633	12.5542	12.5451	12.4996	12.4541	12.4086	12.3631	12.3176	12.3085	12.2994	12.2540	12.2085	12.1630	12.1175	12.0720	12.0629	12.0538	12.0083	11.9628	11.9173	11.8718	11.8263	11.8173	11.8082	11.7627	11.7172	11.6717	11.6262	11.5816	11.5784	11.5714
G1	X	0.0000	0.7500	1.1000	6.0000	11.0000	16.0000	21.0000	26.0000	27.0000	28.0000	33.0000	38.0000	43.0000	48.0000	53.0000	54.0000	55.0000	60.0000	65.0000	70.0000	75.0000	80.0000	81.0000	82.0000	87.0000	92.0000	97.0000	102.0000	107.0000	108.0000	109.0000	114.0000	118.9985	123.9885	128.9784	133.8661	134.2161	134.9660
	Y	-2.3900	-2.3900	-2.3900	-2.3900	-2.3900	-2.3900	-2.3900	-2.3900	-2.3900	-2.3900	-2.3900	-2.3900	-2.3900	-2.3900	-2.3900	-2.3900	-2.3900	-2.3900	-2.3900	-2.3900	-2.3900	-2.3900	-2.3900	-2.3900	-2.3900	-2.3900	-2.3900	-2.3900	-2.3900	-2.3900	-2.3900	-2.3900	-2.3903	-2.4039	-2.4383	-2.4822	-2.4868	-2.5070
	Z	12.7872	12.7804	12.7772	12.7327	12.6872	12.6417	12.5962	12.5507	12.5416	12.5325	12.4870	12.4415	12.3960	12.3505	12.3050	12.2959	12.2858	12.2414	12.1959	12.1504	12.1049	12.0594	12.0503	12.0412	11.9957	11.9502	11.9047	11.8592	11.8137	11.8047	11.7956	11.7501	11.7046	11.6591	11.6136	11.5680	11.5658	11.5588
G1R	X	0.0000	0.7500	1.1000	6.0000	11.0000	16.0000	21.0000	26.0000	27.0000	28.0000	33.0000	38.0000	43.0000	48.0000	53.0000	54.0000	55.0000	60.0000	65.0000	70.0000	75.0000	80.0000	81.0000	82.0000	87.0000	92.0000	97.0000	102.0000	107.0000	108.0000	109.0000	114.0000	118.9980	123.9854	128.9727	133.8573	134.2073	134.9572
	Y	-3.0200	-3.0200	-3.0200	-3.0200	-3.0200	-3.0200	-3.0200	-3.0200	-3.0200	-3.0200	-3.0200	-3.0200	-3.0200	-3.0200	-3.0200	-3.0200	-3.0200	-3.0200	-3.0200	-3.0200	-3.0200	-3.0200	-3.0200	-3.0200	-3.0200	-3.0200	-3.0200	-3.0200	-3.0200	-3.0200	-3.0200	-3.0200	-3.0203	-3.0339	-3.0683	-3.1221	-3.1267	-3.1370
	Z	12.7746	12.7678	12.7646	12.7201	12.6746	12.6291	12.5836	12.5381	12.5290	12.5199	12.4744	12.4289	12.3834	12.3379	12.2924	12.2833	12.2742	12.2288	12.1833	12.1378	12.0923	12.0468	12.0377	12.0286	11.9831	11.9376	11.8921	11.8466	11.8011	11.7921	11.7830	11.7375	11.6920	11.6465	11.6010	11.5564	11.5532	11.5462
LCL	X	0.0000	0.7500	1.1000	6.0000	11.0000	16.0000	21.0000	26.0000	27.0000	28.0000	33.0000	38.0000	43.0000	48.0000	53.0000	54.0000	55.0000	60.0000	65.0000	70.0000	75.0000	80.0000	81.0000	82.0000	87.0000	92.0000	97.0000	102.0000	107.0000	108.0000	109.0000	114.0000	118.9971	123.9781	128.9590	133.8359	134.1859	134.9358
	Y	-4.5500	-4.5500	-4.5500	-4.5500	-4.5500	-4.5500	-4.5500	-4.5500	-4.5500	-4.5500	-4.5500	-4.5500	-4.5500	-4.5500	-4.5500	-4.5500	-4.5500	-4.5500	-4.5500	-4.5500	-4.5500	-4.5500	-4.5500	-4.5500	-4.5500	-4.5500	-4.5500	-4.5500	-4.5500	-4.5500	-4.5500	-4.5500	-4.5503	-4.5639	-4.5982	-4.6520	-4.6586	-4.6668
	Z	12.7440	12.7372	12.7340	12.8895	12.6440	12.5985	12.5530	12.5075	12.4984	12.4893	12.4438	12.3983	12.3528	12.3073	12.2618	12.2527	12.2436	12.1982	12.1527	12.1072	12.0617	12.0162	12.0071	11.9980	11.9525	11.9070	11.8615	11.8160	11.7705	11.7615	11.7524	11.7069	11.6614	11.6159	11.5704	11.5258	11.5226	11.5156
G2L	X	0.0000	0.7500	1.1000	6.0000	11.0000	16.0000	21.0000	26.0000	27.0000	28.0000	33.0000	38.0000	43.0000	48.0000	53.0000	54.0000	55.0000	60.0000	65.0000	70.0000	75.0000	80.0000	81.0000	82.0000	87.0000	92.0000	97.0000	102.0000	107.0000	108.0000	109.0000	114.0000	118.9961	123.9707	128.9453	133.8146	134.1645	134.9145
	Y	-6.0800	-6.0800	-6.0800	-6.0800	-6.0800	-6.0800	-6.0800	-6.0800	-6.0800	-6.0800	-6.0800	-6.0800	-6.0800	-6.0800	-6.0800	-6.0800	-6.0800	-6.0800	-6.0800	-6.0800	-6.0800	-6.0800	-6.0800	-6.0800	-6.0800	-6.0800	-6.0800	-6.0800	-6.0800	-6.0800	-6.0800	-6.0800	-6.0803	-6.0938	-6.1281	-6.1818	-6.1864	-6.1967
	Z	12.7134	12.7066	12.7034	12.6589	12.6134	12.5679	12.5224	12.4769	12.4678	12.4587	12.4132	12.3677	12.3222	12.2767	12.2312	12.2221	12.2130	12.1676	12.1221	12.0766	12.0311	11.9856	11.9765	11.9674	11.9219	11.8764	11.8309	11.7854	11.7398	11.7309	11.7218	11.6763	11.6308	11.5853	11.5398	11.4953	11.4921	11.4850
G2	X	0.0000	0.7500	1.1000	6.0000	11.0000	16.0000	21.0000	26.0000	27.0000	28.0000	33.0000	38.0000	43.0000	48.0000	53.0000	54.0000	55.0000	60.0000	65.0000	70.0000	75.0000	80.0000	81.0000	82.0000	87.0000	92.0000	97.0000	102.0000	107.0000	108.0000	109.0000	114.0000	118.9957	123.9677	128.9396	133.8057	134.1557	134.9056
	Y	-6.7100	-6.7100	-6.7100	-6.7100	-6.7100	-6.7100	-6.7100	-6.7100	-6.7100	-6.7100	-6.7100	-6.7100	-6.7100	-6.7100	-6.7100	-6.7100	-6.7100	-6.7100	-6.7100	-6.7100	-6.7100	-6.7100	-6.7100	-6.7100	-6.7100	-6.7100	-6.7100	-6.7100	-6.7100	-6.7100	-6.7100	-6.7100	-6.7103	-6.7238	-6.7581	-6.8117	-6.8164	-6.8266
	Z	12.7008	12.6940	12.6908	12.6463	12.6008	12.5553	12.5098	12.4643	12.4552	12.4461	12.4006	12.3551	12.3096	12.2641	12.2186	12.2095	12.2004	12.1550	12.1095	12.0640	12.0185	11.9730	11.9639	11.9548	11.9093	11.8638	11.8183	11.7728	11.7273	11.7183	11.7092	11.6637	11.6182	11.5727	11.5272	11.4827	11.4795	11.4724
G2R	X	0.0000	0.7500	1.1000	6.0000	11.0000	16.0000	21.0000	26.0000	27.0000	28.0000	33.0000	38.0000	43.0000	48.0000	53.0000	54.0000	55.0000	60.0000	65.0000	70.0000	75.0000	80.0000	81.0000	82.0000	87.0000	92.0000	97.0000	102.0000	107.0000	108.0000	109.0000	114.0000	118.9952	123.9646	128.9339	133.7969	134.1469	134.8968
	Y	-7.3400	-7.3400	-7.3400	-7.3400	-7.3400	-7.3400	-7.3400	-7.3400	-7.3400	-7.3400	-7.3400	-7.3400	-7.3400	-7.3400	-7.3400	-7.3400	-7.3400	-7.3400	-7.3400	-7.3400	-7.3400	-7.3400	-7.3400	-7.3400	-7.3400	-7.3400	-7.3400	-7.3400	-7.3400	-7.3400	-7.3400	-7.3400	-7.3403	-7.3538	-7.3881	-7.4417	-7.4463	-7.4566
	Z	12.6882	12.6814	12.6782	12.6337	12.5882	12.5427	12.4972	12.4517	12.4426	12.4335	12.3880	12.3425	12.2970	12.2515	12.2060	12.1969	12.1878	12.1424	12.0969	12.0514	12.0059	11.9604	11.9513	11.9422	11.8967	11.8512	11.8057	11.7602	11.7147	11.7057	11.6966	11.6511	11.6056	11.5601	11.5146	11.4701	11.4669	11.4598
R3	X	0.0000	0.7500	1.1000	6.0000	11.0000	16.0000	21.0000	26.0000	27.0000	28.0000	33.0000	38.0000	43.0000	48.0000	53.0000	54.0000	55.0000	60.0000	65.0000	70.0000	75.0000	80.0000	81.0000	82.0000	87.0000	92.0000	97.0000	102.0000	107.0000	108.0000	109.0000	114.0000	118.9945	123.9588	128.9231	133.7800	134.1300	134.8799
	Y	-8.5500	-8.5500	-8.5500	-8.5500	-8.5500	-8.5500	-8.5500	-8.5500	-8.5500	-8.5500	-8.5500	-8.5500	-8.5500	-8.5500	-8.5500	-8.5500	-8.5500	-8.5500	-8.5500	-8.5500	-8.5500	-8.5500	-8.5500	-8.5500	-8.5500	-8.5500	-8.5500	-8.5500	-8.5500	-8.5500	-8.5500	-8.5500	-8.5502	-8.5638	-8.5980	-8.6516	-8.6562	-8.6664
	Z	12.6640	12.6572	12.6540	12.6095	12.5640	12.5185	12.4730	12.4275	12.4184	12.4093	12.3638	12.3183	12.2728	12.2273	12.1818	12.1727	12.1636	12.1182	12.0727	12.0272	11.9817	11.9362	11.9271	11.9180	11.8725	11.8270	11.7815	11.7360	11.6905	11.6815	11.6724	11.6269	11.5814	11.5359	11.4904	11.4459	11.4427	11.4356
R2	X	0.0000	0.7500	1.1000	6.0000	11.0000	16.0000	21.0000	26.0000	27.0000	28.0000	33.0000	38.0000	43.0000	48.0000	53.0000	54.0000	55.0000	60.0000	65.0000	70.0000	75.0000	80.0000	81.0000	82.0000	87.0000	92.0000	97.0000	102.0000	107.0000	108.0000	109.0000	114.0000	118.9942	123.9571	128.9199	133.7751	134.1251	134.8750
	Y	-8.9000	-8.9000	-8.9000	-8.9000	-8.9000	-8.9000	-8.9000	-8.9000	-8.9000	-8.9000	-8.9000	-8.9000	-8.9000	-8.9000	-8.9000	-8.9000	-8.9000	-8.9000	-8.9000	-8.9000	-8.9000	-8.9000	-8.9000	-8.9000	-8.9000	-8.9000	-8.9000	-8.9000	-8.9000	-8.9000	-8.9000	-8.9000	-8.9002	-8.9138	-8.9480	-9.0015	-9.0062	-9.0164
	Z	12.5820	12.5752	12.5720	12.5275	12.4820	12.4365	12.3910	12.3455	12.3364	12.3273	12.2818	12.2363	12.1908	12.1453	12.0998	12.0907	12.0816	12.0362	11.9907	11.9452	11.8997	11.8542	11.8451	11.8360	11.7905	11.7450	11.6995	11.6540	11.6085	11.5995	11.5904	11.5449	11.4994	11.4539	11.4084	11.3639	11.3607	11.3536
R1	X	0.0000	0.7500	1.1000	6.0000	11.0000	16.0000	21.0000	26.0000	27.0000	28.0000	33.0000	38.0000	43.0000	48.0000	53.0000	54.0000	55.0000	60.0000	65.0000	70.0000	75.0000	80.0000	81.0000	82.0000	87.0000	92.0000	97.0000	102.0000	107.0000	108.0000	109.0000	114.0000	118.9941	123.9584	128.9188	133.7730	134.1230	134.8729
	Y	-9.0500	-9.0500	-9.0500	-9.0500	-9.0500	-9.0500	-9.0500	-9.0500	-9.0500	-9.0500	-9.0500	-9.0500	-9.0500	-9.0500	-9.0500	-9.0500	-9.0500	-9.0500	-9.0500	-9.0500	-9.0500	-9.0500	-9.0500	-9.0500	-9.0500	-9.0500	-9.0500	-9.0500	-9.0500	-9.0500	-9.0500	-9.0500	-9.0502	-9.0638	-9.0980	-9.1515	-9.1561	-9.1664
	Z	13.4820	13.4752	13.4720	13.4275	13.3820	13.3365	13.2910	13.2455	13.2364	13.2273	13.1818	13.1363	13.0908	13.0453	12.9998	12.9907	12.9816	12.9362	12.8907	12.8452	12.7997	12.7542	12.7451	12.7360	12.6905	12.6450	12.5995	12.5540	12.5085	12.4995	12.4904	12.4449	12.3994	12.3539	12.3084	12.2639	12.2607	12.2536

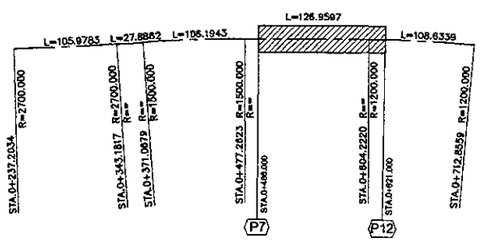

KEY PLAN

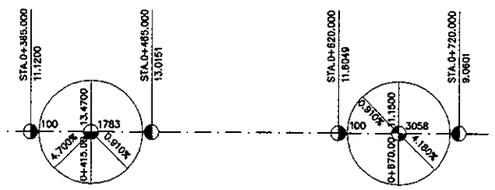

ELEMENT OF VERTICAL ALIGNMENT
NOT TO SCALE

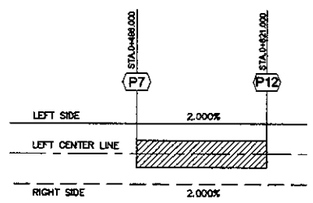

SUPER ELEVATION
NOT TO SCALE

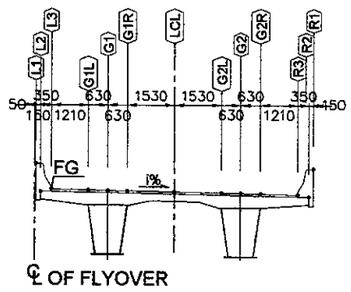

SECTION VIEW
SCALE 1:200

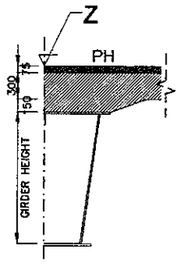

ELEVATION REFERENCE
NOT TO SCALE

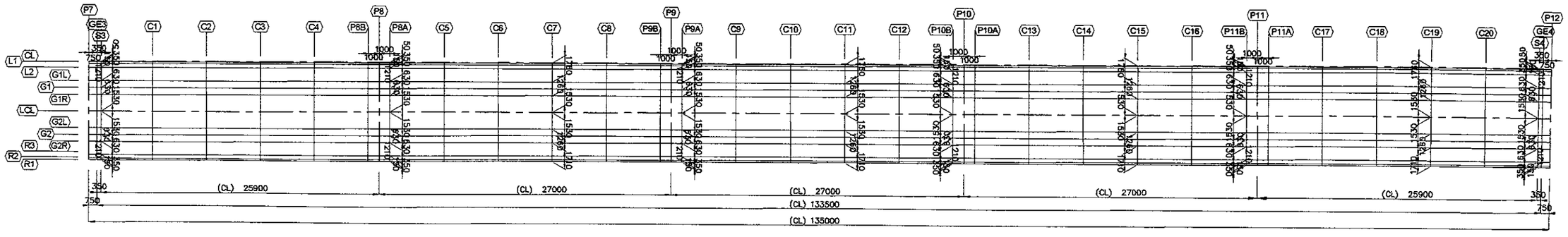

PLAN VIEW
SCALE 1:400

JICA JAPAN INTERNATIONAL COOPERATION AGENCY / KEI KATAHIRA & ENGINEERS INTERNATIONAL	DESIGNED BY	CHECKED BY	SUBMITTED BY	REPUBLIC OF INDONESIA MINISTRY OF PUBLIC WORKS DIRECTORATE GENERAL OF HIGHWAYS	PROJECT AND LOCATION :	SCALE :	DRAWING TITLE :	DRAWING NO :
	Name: S. MATSUI	Name: T. OKUMURA	Name: M. KIUCHI		DETAILED DESIGN STUDY OF NORTH JAVA CORRIDOR FLYOVER PROJECT GEBANG FLYOVER - CONTRACT PACKAGE 2 (NAGREG - GEBANG) WEST JAVA PROVINCE	NOT TO SCALE	TABLE OF QUANTITIES P4 - P7	GST-009
	Sign	Sign	Sign	APPROVED BY: Ir. HERRY VAZA M,Eng.Sc NIP. : 110038400 — Sign				SHEET NO :
	Date	Date	Date	Date		FULL SIZE A3		09 / 76

MAIN GIRDER

KIND	MATERIAL	PLATE THICKNESS (mm)	P4 – P7 (3 SPAN) MAIN GIRDER (kg)	CROSS BEAM (kg)	TOTAL
PL	SM490YB	29	9,670		9,670
		28	10,678		10,678
		25	3,925		3,925
		24	17,218		17,218
		22	22,752	5,202	27,954
		18	11,077		11,077
		17	7,456		7,456
	SM490YB SUB – TOTAL		82,776	5,202	87,978
	SM490YA	16	3,906		3,906
		15	62,589	38	62,627
		14	1,707		1,707
		13	488		488
		12	288		288
		10	5,096		5,096
		9	224	1,680	1,904
	SM490YA		74,298	1,718	76,016
	SM490C	42	198		198
	SM490B	40	130		130
		31	146		146
		30	98		98
	SM490B SUB – TOTAL		374		374
	SM400A	24		3,770	3,770
		13		884	884
		10		260	260
		9	2,474	3,068	5,542
		6	48		48
	SM400A SUB – TOTAL		2,522	7,982	10,504
	SS400	17	300		300
		16	280		280
		13		1,625	1,625
		12	124		124
		10	160	702	862
		9	262	54	316
		8	128		128
		6	60		60
		3.2	80		80
	SS400 SUB – TOTAL		1,394	2,381	3,775
PL TOTAL			161,562	17,283	178,845
H	SS400	700x300x13x24		5,291	5,291
SGP	SGP	20A	12		12
PIPE	STK400	267.4x6.6	208		208
		101.6x4.2		36	36
PIPE TOTAL			208	36	244
RB	SR235	ø13	12		12
TOTAL 1			161,794	22,610	184,404
STUD	STUD	ø22x150	682		682
TCB	S10T	M22	4,964	806	5,770
BN	SS400	M16	12	10	22
TOTAL 2			5,658	816	6,474
GRAND TOTAL			167,452	23,426	190,878

BOLT NUMBER

KIND	MATERIAL	PLATE THICKNESS (mm)	P4 – P7 (3 SPAN) MAIN GIRDER	CROSS BEAM	TOTAL (nos)
TCB	S10T	M22 x 115	1,120		1,120
		M22 x 100	1,184		1,184
		M22 x 95	1,480		1,480
		M22 x 90	424		424
		M22 x 85	64	832	896
		M22 x 80	1,032		1,032
		M22 x 75	304	624	928
		M22 x 70	3,056		3,056
TCB TOTAL			8,664	1,456	10,120
BN	SS400	M16 x 65		24	24
		M16 x 55		32	32
		M16 x 45	48		48
BN TOTAL			48	56	104
GRAND TOTAL			8,712	1,512	10,224

PORTAL-TYPE GIRDER P5 AND P6

MATERIAL	PLATE THICKNESS (mm)	BLOCK–1	BLOCK–2	TOTAL
SM 570	42.00	4,752.20		4,752.20
SM 490YB	36.00	2,180.60		2,180.60
	32.00	13,202.60		13,202.60
	30.00	6,291.60		6,291.60
	28.00	1,409.20		1,409.20
	22.00	7,599.00		7,599.00
	19.00	12,391.80		12,391.80
	TOTAL	43,074.80		43,074.80
SM 490YA	16.00	244.00		244.00
	15.00	5,125.60		5,125.60
	TOTAL	5,369.60		5,369.60
SM 400B	36.00		1,738.40	1,738.40
SM 400A	32.00		9,837.00	9,837.00
	30.00		3,904.20	3,904.20
	24.00	239.60		239.60
	22.00		103.80	103.80
	19.00		6,662.20	6,662.20
	18.00		328.60	328.60
	16.00	260.00	152.60	412.60
	15.00		1,279.20	1,279.20
	12.00		861.20	861.20
	10.00	46.20	46.20	92.40
	9.00	545.40	609.20	1,154.60
	TOTAL	1,091.20	23,784.20	24,875.40
PLATE TOTAL		54,287.80	25,522.60	79,810.40
S 10T	TCB Bolt		1,118.00	1,118.00
SR 235			0.60	0.60
SGP	20A		1.00	1.00
SS 400	BN M16		1.00	1.00
SUB TOTAL			1,120.60	1,120.60
GRANDTOTAL		54,287.80	26,643.20	80,931.00

DECK SLAB, WATERPROOFING AND PAVEMENT

ITEM	UNIT	QUANTITY	NOTES
DECK SLAB : – CONCRETE	m³	286.032	
– PC. CABLE	kg	3,195.82	
– REINFORCEMENT	kg	39,182.66	
WATERPROOFING	m²	724.01	
PAVEMENT	m²	–	HIGHWAY PORTION

PAINT AREA

ITEM	UNIT	QUANTITY	NOTES
INNER AREA	m²	1,476.99	
OUTER AREA	m²	992.71	
CONCRETE CONTACT AREA	m²	327.00	

JAPAN INTERNATIONAL COOPERATION AGENCY KATAHIRA & ENGINEERS INTERNATIONAL	DESIGNED BY	CHECKED BY	SUBMITTED BY	REPUBLIC OF INDONESIA MINISTRY OF PUBLIC WORKS DIRECTORATE GENERAL OF HIGHWAYS	PROJECT AND LOCATION :	SCALE :	DRAWING TITLE :	DRAWING NO :
	Name S. MATSUI	Name T. OKUMURA	Name M. KIUCHI		DETAILED DESIGN STUDY OF NORTH JAVA CORRIDOR FLYOVER PROJECT GEBANG FLYOVER - CONTRACT PACKAGE 2 (NAGREG - GEBANG) WEST JAVA PROVINCE	NOT TO SCALE	TABLE OF QUANTITIES P7 - P12	GST-010
	Sign	Sign	Sign	APPROVED BY Ir. HERRY VAZA M,Eng.Sc NIP. : 110038400 Sign				SHEET NO :
	Date	Date	Date	Date		FULL SIZE A3		10 / 76

MAIN GIRDER

KIND	MATERIAL	PLATE THICKNESS (mm)	P7 – P12 (5 SPAN) MAIN GIRDER (kg)	CROSS BEAM (kg)	TOTAL
PL	SM490YB	25	5,405	3,606	9,011
		24	18,093		18,093
		22		2,090	2,090
		20	20,454		20,454
		19	6,126		6,126
		18	1,792		1,792
		17	49,472		49,472
	SM490YB SUB – TOTAL		101,342	5,696	107,038
	SM490YA	16	2,976		2,976
		15	92		92
		14	75,133		75,133
		13	452		452
		12	1,577		1,577
		11	764		764
		10	8,244		8,244
		9	1,344	1,628	2,972
	SM490YA SUB – TOTAL		90,582	1,628	92,210
	SM490B	31	292		292
		30	196		196
	SM490B SUB – TOTAL		488		488
	SM400A	24		5,820	5,820
		13		1,320	1,320
		10		400	400
		9	3,496	4,120	7,616
		8	60		60
	SM400A SUB – TOTAL		3,556	11,660	15,216
	SS400	15	160		160
		13		2,500	2,500
		12	100		100
		11	272		272
		10		1,080	1,080
		9	144	54	198
		8	108		108
		6	236		236
		3.2	40		40
	SS400 SUB – TOTAL		1,060	3,634	4,694
PL TOTAL			197,028	22,618	219,646
H	SS400	700*300*13*24		8,140	8,140
SGP	SGP	20 A	20		20
PIPE	STK400	267.4* 6.6	260		260
		101.6* 4.2		36	36
PIPE TOTAL			260	36	296
RB	SR235	13 8	20		20
TOTAL 1			197,328	30,794	228,122
STUD	STUD	22 8* 150	986		986
TCB	S10T	M 22	6,140	1,240	7,380
BN	SS400	M 16	20	10	30
TOTAL 2			7,146	1,250	8,396
GRAND TOTAL			204,474	32,044	236,518

BOLT NUMBER

KIND	MATERIAL	DIMENSION (mm)	P7 – P12 (5 SPAN) MAIN GIRDER	CROSS BEAM	TOTAL (nos)
TCB	S10T	M22 x 100	832		832
		M22 x 95	480		480
		M22 x 90	880		880
		M22 x 85	48	1,280	1,328
		M22 x 80	2,728		2,728
		M22 x 75	2,124	960	3,084
		M22 x 70	4,096		4,096
TCB TOTAL			11,188	2,240	13,428
BN	SS400	M16 x 65		24	24
		M16 x 55		32	32
		M16 x 45	80		80
BN TOTAL			80	56	136
GRAND TOTAL			11,268	2,296	13,564

T-TYPE GIRDER P8 AND P11

MATERIAL	PLATE THICKNESS (mm)	BLOCK-1	NOTES
SM 490YB	32.00	8,023.20	
	30.00	3,706.60	
	23.00	6,271.20	
	22.00	5,881.80	
	19.00	664.40	
	TOTAL	24,547.20	
SM 490YA	16.00	260.40	
	14.00	4,220.40	
	TOTAL	4,480.80	
SM 400A	28.00	1,409.20	
	19.00	3,220.40	
	TOTAL	4,629.60	
SS 400	9.00	42.80	
PLATE TOTAL		33,700.40	
SKK 400	20.00	2,561.00	
	20.00	1,362.00	w=681kg/lm,w/Inner Rib
SS 400	BN M16	4.00	
SUB TOTAL		3,927.00	
GRAND TOTAL		37,627.40	

T-TYPE GIRDER P9 AND P10

MATERIAL	PLATE THICKNESS (mm)	BLOCK-1	NOTES
SM 490YB	30.00	3,706.60	
	26.00	6,515.40	
	23.00	6,271.20	
	22.00	5,892.40	
	19.00	664.40	
	TOTAL	23,050.00	
SM 490YA	16.00	260.40	
	14.00	4,220.40	
	TOTAL	4,480.80	
SM 400A	28.00	1,409.20	
	20.00	3,231.20	
	TOTAL	4,640.40	
SS 400	9.00	42.80	
PLATE TOTAL		32,214.00	
SKK 400	20.00	2,569.20	
	20.00	1,362.00	w=681kg/lm, w/Inner Rib
SS 400	BN M16	4.00	
SUB TOTAL		3,935.20	
GRAND TOTAL		36,149.20	

DECK SLAB, WATERPROOFING AND PAVEMENT

I T E M	UNIT	QUANTITY	NOTES
DECK SLAB : – CONCRETE	m³	430.211	
– PC. CABLE	kg	4,707.38	
– REINFORCEMENT	kg	60,203.38	
WATERPROOFING	m²	1,109.38	
PAVEMENT	m²	–	HIGHWAY PORTION

PAINT AREA

I T E M	UNIT	QUANTITY	NOTES
INNER AREA	m²	1,731.76	
OUTER AREA	m²	1,472.84	
CONCRETE CONTACT AREA	m²	932.00	

JAPAN INTERNATIONAL COOPERATION AGENCY / KATAHIRA & ENGINEERS INTERNATIONAL	DESIGNED BY	CHECKED BY	SUBMITTED BY	REPUBLIC OF INDONESIA MINISTRY OF PUBLIC WORKS DIRECTORATE GENERAL OF HIGHWAYS	PROJECT AND LOCATION :	SCALE :	DRAWING TITLE :	DRAWING NO :
	Name: S. MATSUI	Name: T. OKUMURA	Name: M. KIUCHI		DETAILED DESIGN STUDY OF NORTH JAVA CORRIDOR FLYOVER PROJECT GEBANG FLYOVER - CONTRACT PACKAGE 2 (NAGREG - GEBANG) WEST JAVA PROVINCE	NOT TO SCALE	BLOCK WEIGHT OF GIRDER P4 - P7	GST-011
	Sign	Sign	Sign	APPROVED BY: Ir. HERRY VAZA M,Eng.Sc NIP. : 110038400				SHEET NO : 11 / 76
	Date	Date	Date	Sign / Date		FULL SIZE A3		

MEMBER	MAIN GIRDER G1									
JOINT NO.	BLOCK-1	BLOCK-2	BLOCK-3	BLOCK-5	BLOCK-6	BLOCK-7	BLOCK-9	BLOCK-10	BLOCK-11	TOTAL
PER MEMBER	3,102	9,083	9,724	10,688	8,433	10,682	9,708	9,043	3,267	
SET	1	1	1	1	1	1	1	1	1	9
GRAND TOTAL	3,102	9,083	9,724	10,688	8,433	10,682	9,708	9,043	3,267	73,730

MEMBER	JOINT G1										
JOINT NO.	J1	J2	J3	J4	J5	J6	J7	J8	J9	J10	TOTAL
PER MEMBER	1,479.0	1,035.0	1,239.0	1,048.0	477.5	477.5	1,048.0	1,239.0	1,034.0	1,431.0	
SET	1	1	1	1	1	1	1	1	1	1	10
GRAND TOTAL	1,479.0	1,035.0	1,239.0	1,048.0	477.5	477.5	1,048.0	1,239.0	1,034.0	1,431.0	10,508.0

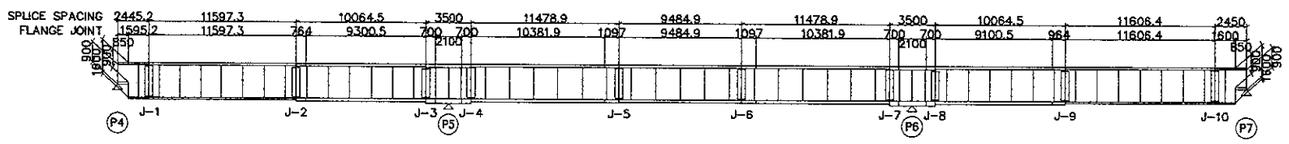

ARRANGEMENT DIAGRAM OF GIRDER G1

NOT TO SCALE

MEMBER	MAIN GIRDER G2									
JOINT NO.	BLOCK-1	BLOCK-2	BLOCK-3	BLOCK-4	BLOCK-7	BLOCK-8	BLOCK-9	BLOCK-10	BLOCK-11	TOTAL
PER MEMBER	1,660	9,054	9,691	10,652	8,408	10,647	9,675	9,029	1,829	
SET	1	1	1	1	1	1	1	1	1	11
GRAND TOTAL	1,660	9,054	9,691	10,652	8,408	10,647	9,675	9,029	1,829	70,645

MEMBER	JOINT G2										
JOINT NO.	J1	J2	J3	J4	J5	J6	J7	J8	J9	J10	TOTAL
PER MEMBER	1,479.0	1,035.0	1,239.0	1,048.0	477.5	477.5	1,048.0	1,247.5	1,042.5	1,431.0	
SET	1	1	1	1	1	1	1	1	1	1	10
GRAND TOTAL	1,479.0	1,035.0	1,239.0	1,048.0	477.5	477.5	1,048.0	1,247.5	1,042.5	1,431.0	10,525.0

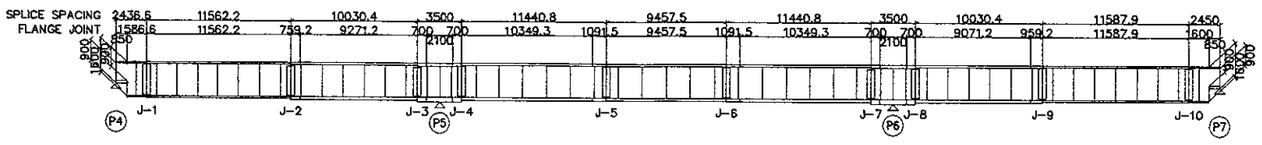

ARRANGEMENT DIAGRAM OF GIRDER G2

NOT TO SCALE

MEMBER	CROSS BEAM			
JOINT NO.	FI-1	FI-2	FI-3	TOTAL
PER MEMBER	1,262	1,262	1,262	
SET	4	4	5	13
GRAND TOTAL	5,048	5,048	6,310	16,406

MEMBER	PORTAL TYPE P5		
JOINT NO.	BLOCK-1	BLOCK-2	TOTAL
PER MEMBER	27,143.9	13,321.6	
SET	1	1	2
GRAND TOTAL	27,143.9	13,321.6	40,465.5

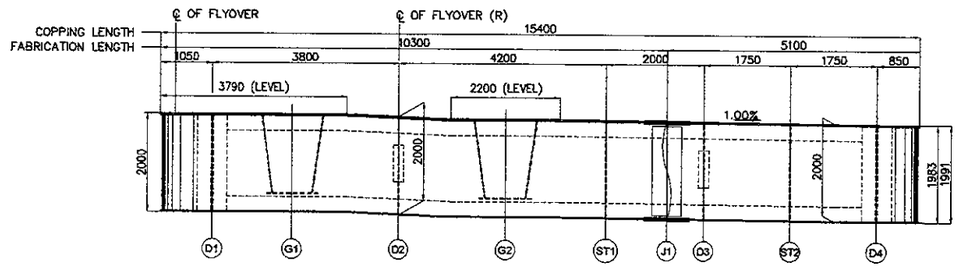

PORTAL-TYPE OF GIRDER P5

NOT TO SCALE

MEMBER	PORTAL TYPE P6		
JOINT NO.	BLOCK-1	BLOCK-2	TOTAL
PER MEMBER	27,143.9	13,321.6	
SET	1	1	2
GRAND TOTAL	27,143.9	13,321.6	40,465.5

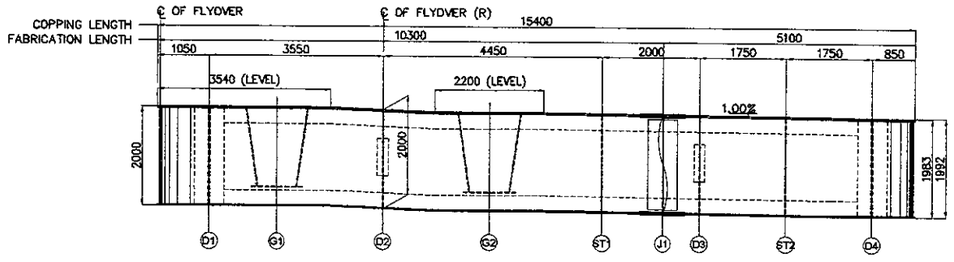

PORTAL-TYPE OF GIRDER P6

NOT TO SCALE

JAPAN INTERNATIONAL COOPERATION AGENCY / KATAHIRA & ENGINEERS INTERNATIONAL	DESIGNED BY	CHECKED BY	SUBMITTED BY	REPUBLIC OF INDONESIA MINISTRY OF PUBLIC WORKS DIRECTORATE GENERAL OF HIGHWAYS	PROJECT AND LOCATION :	SCALE :	DRAWING TITLE :	DRAWING NO :
	Name: S. MATSUI	Name: T. OKUMURA	Name: M. KIUCHI	APPROVED BY: Ir. HERRY VAZA M,Eng.Sc NIP. : 110038400	DETAILED DESIGN STUDY OF NORTH JAVA CORRIDOR FLYOVER PROJECT GEBANG FLYOVER - CONTRACT PACKAGE 2 (NAGREG - GEBANG) WEST JAVA PROVINCE	NOT TO SCALE FULL SIZE A3	BLOCK WEIGHT OF GIRDER P7 - P12	GST-012 SHEET NO : 12 / 76
	Sign	Sign	Sign	Sign				
	Date	Date	Date	Date				

MEMBER	MAIN GIRDER G1												
JOINT NO.	BLOCK-1	BLOCK-2	BLOCK-3	BLOCK-5	BLOCK-6	BLOCK-8	BLOCK-9	BLOCK-11	BLOCK-12	BLOCK-14	BLOCK-15	BLOCK-16	TOTAL
PER MEMBER	2930	7822	9431	8259	8259	8259	8259	8259	8259	9441	7845	2996	
SET	1	1	1	1	1	1	1	1	1	1	1	1	12
GRAND TOTAL	2930	7822	9431	8259	8259	8259	8259	8259	8259	9441	7845	2996	90019

MEMBER	CROSS BEAM		
JOINT NO.	FI-1	FI-2	TOTAL
PER MEMBER	1,231	1,231	
SET	8	12	20
GRAND TOTAL	9,848	14,772	24,620

MEMBER	JOINT G1															
JOINT NO.	J1	J2	J3	J4	J5	J6	J7	J8	J9	J10	J11	J12	J13	J14	J15	TOTAL
PER MEMBER	1,496.0	886.0	828.5	730.5	700.5	674.0	667.0	393.0	363.0	674.0	700.5	730.5	828.5	886.0	1,496.0	
SET	1	1	1	1	1	1	1	1	1	1	1	1	1	1	1	15
GRAND TOTAL	1,496.0	886.0	828.5	730.5	700.5	674.0	667.0	393.0	363.0	674.0	700.5	730.5	828.5	886.0	1,496.0	12,054.0

MEMBER	GIRDER P8 AND P11		
PIER	P8	P11	TOTAL
PER MEMBER	18,813.70	18,813.70	
SET	1	1	2
GRAND TOTAL	18,813.70	18,813.70	37,627.40

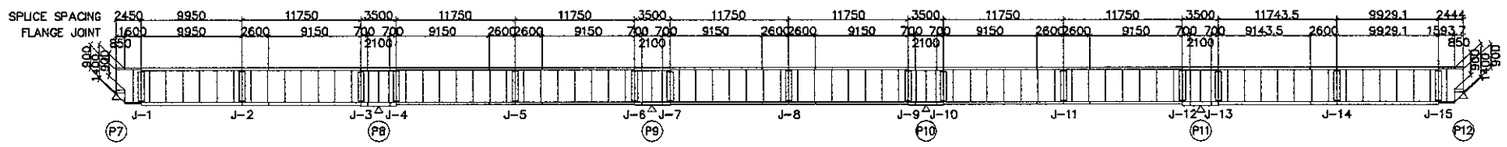

ARRANGEMENT DIAGRAM OF GIRDER G1

NOT TO SCALE

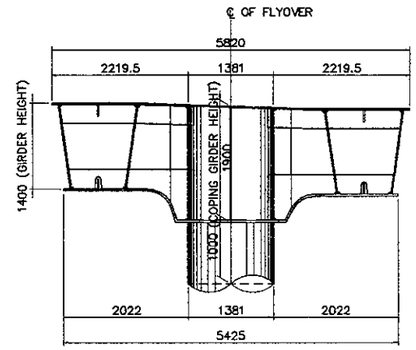

T-TYPE OF GIRDER P8/P11

NOT TO SCALE

MEMBER	MAIN GIRDER G2												
JOINT NO.	BLOCK-1	BLOCK-2	BLOCK-3	BLOCK-5	BLOCK-6	BLOCK-8	BLOCK-9	BLOCK-11	BLOCK-12	BLOCK-14	BLOCK-15	BLOCK-16	TOTAL
PER MEMBER	1,588	7,822	9,431	8,259	8,259	8,259	8,259	8,259	8,259	9,431	7,815	1,649	
SET	1	1	1	1	1	1	1	1	1	1	1	1	12
GRAND TOTAL	1,588	7,822	9,431	8,259	8,259	8,259	8,259	8,259	8,259	9,431	7,815	1,649	87,290

MEMBER	GIRDER P9 AND P10		
PIER	P9	P10	TOTAL
PER MEMBER	18,074.60	18,074.60	
SET	1	1	2
GRAND TOTAL	18,074.60	18,074.60	36,149.20

MEMBER	JOINT G2															
JOINT NO.	J1	J2	J3	J4	J5	J6	J7	J8	J9	J10	J11	J12	J13	J14	J15	TOTAL
PER MEMBER	1,496.0	886.0	828.5	730.5	700.5	674.0	667.0	394.0	364.0	674.0	700.5	730.5	828.5	886.0	1,496.0	
SET	1	1	1	1	1	1	1	1	1	1	1	1	1	1	1	15
GRAND TOTAL	1,496.0	886.0	828.5	730.5	700.5	674.0	667.0	394.0	364.0	674.0	700.5	730.5	828.5	886.0	1,496.0	12,056.0

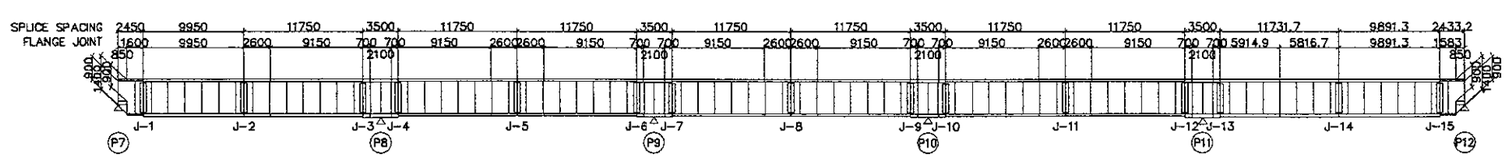

ARRANGEMENT DIAGRAM OF GIRDER G2

NOT TO SCALE

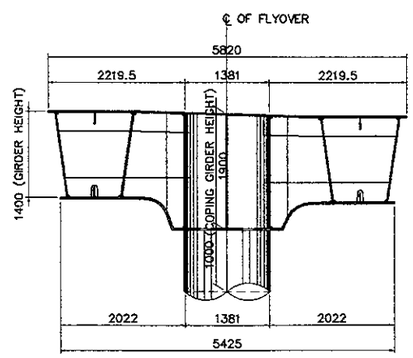

T-TYPE OF GIRDER P9/P10

NOT TO SCALE

JAPAN INTERNATIONAL COOPERATION AGENCY / KATAHIRA & ENGINEERS INTERNATIONAL	DESIGNED BY	CHECKED BY	SUBMITTED BY	REPUBLIC OF INDONESIA MINISTRY OF PUBLIC WORKS DIRECTORATE GENERAL OF HIGHWAYS	PROJECT AND LOCATION :	SCALE :	DRAWING TITLE :	DRAWING NO :
	Name S. MATSUI	Name T. OKUMURA	Name M. KIUCHI	APPROVED BY Ir. HERRY VAZA M.Eng.Sc NIP. : 110038400	DETAILED DESIGN STUDY OF NORTH JAVA CORRIDOR FLYOVER PROJECT GEBANG FLYOVER - CONTRACT PACKAGE 2 (NAGREG - GEBANG) WEST JAVA PROVINCE	NOT TO SCALE	SECTIONAL DIMENSION OF GIRDER G1 P4 - P7	GST-13
	Sign	Sign	Sign	Sign				SHEET NO :
	Date	Date	Date	Date		FULL SIZE A3		13 / 76

G-1

REQUIRED ————

CAPACITY – – – –

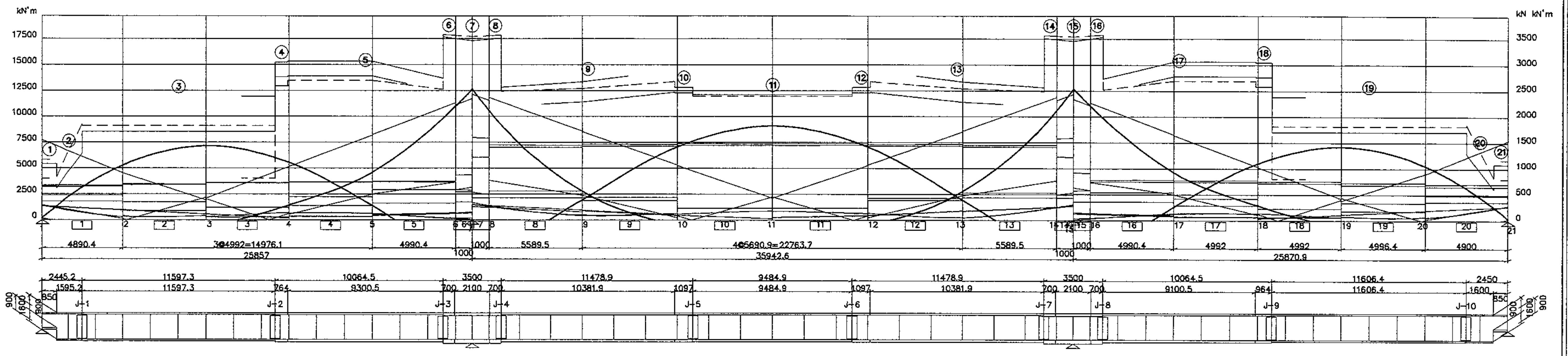

		1			2		3				4				5			6		7			
SECTION ID		Sec-1			Sec-1		Sec-2				Sec-3				Sec-3			Sec-4		Sec-4			
U-FLG, W=1500 MM		15			15		18				24				24			32		32			
U-FLG QUALITY		SM 490YA																					
U-FLG LOG. RIB	NOS	1			1		1				1				1			1		0			
	WIDTH	220			220		220				220				220			220		0			
	THICKNESS	22			22		22				22				22			22		0			
	QUALITY																						
LWEB-PL	WIDTH	912.4	912.4	912.4	912.4	1600.7	1597.6	1597.6	1597.6	1597.6	1591.6	1591.6	1591.6	1591.6	1591.6	1591.6	1591.6	1583.5	1583.5	1583.5	1583.5	1583.5	1583.5
	THICKNESS	24			24		15				15				15			15		15			
	QUALITY	SM 490YB																					
RWEB-PL	WIDTH	912.4	912.4	912.4	912.4	1600.7	1597.6	1597.6	1597.6	1597.6	1591.6	1591.6	1591.6	1591.6	1591.6	1591.6	1591.6	1583.5	1583.5	1583.5	1583.5	1583.5	1583.5
	THICKNESS	24			24		15				15				15			15		15			
	QUALITY	SM 490YB																					
L-FLG LOG. RIB	NOS	0			0		0				0				1			1		1			
	WIDTH	0			0		0				0				140			140		140			
	THICKNESS	0			0		0				0				16			16		16			
	QUALITY										SM 490YA									SM 570			
L-FLG, W=1049 MM		18			14		17				29				29			42		42			
L-FLG QUALITY		SM 490YB			SM490YA						SM 490YB									SM 570			
U-FLG STRESS	σ	-59	-52	-84	-86	-66	-71	-129	-119	35	-95	30	-91	36	-90	36	151	117	130	130	152	190	155
	σa	210	200	150	150	131	166	153	157	210	196	210	197	210	197	210	210	210	210	210	210	210	210
	σa−σ	151	147	67	64	65	95	24	38	175	101	180	107	174	107	174	59	93	80	80	58	20	55
L-FLG STRESS	σ	57	-56	100	110	87	98	181	163	-45	119	-38	113	-45	109	-44	-174	-131	-145	-145	-168	-203	-168
	σa	210	210	210	210	210	210	210	210	159	210	210	210	210	210	210	210	245	245	245	245	245	245
	σa−σ	153	154	110	100	123	112	29	47	114	91	172	97	165	101	166	36	114	100	100	77	42	77
WEB SHEAR STRESS	τ	53	17	50	50	26	40	15	7	23	7	23	8	25	8	25	57	55	57	57	59	25	30
	τa	120	120	120	120	120	120	120	120	120	120	120	120	120	120	120	120	120	120	120	120	120	120
	COMBINED	0.25	0.08	0.30	0.33	0.18	0.27	0.71	0.56	0.06	0.29	0.05	0.26	0.06	0.25	0.06	0.78	0.50	0.56	0.59	0.76	0.85	0.62
SECTION GOVERN		LEFT	LEFT	RIGHT	LEFT	J-1	LEFT	MAX.	J-2	J-2	LEFT	LEFT	RIGHT	RIGHT	LEFT	LEFT	J-3	LEFT	RIGHT	LEFT	MAX. L	MAX. R	RIGHT
NET U-FLG STRESS, σ										44							166						
NET L-FLG STRESS, σ						107			201														

		8		9		10	11				12	13		14		15			
SECTION ID		Sec-4		Sec-5		Sec-5	Sec-6				Sec-7	Sec-7		Sec-8		Sec-8			
U-FLG, W=1500 MM		32		22		22	22				22	22		32		32			
U-FLG QUALITY							SM 490YB												
U-FLG LOG. RIB	NOS	1		1		1	1				1	1		1		0			
	WIDTH	200		200		200	200				200	200		200		0			
	THICKNESS	22		22		22	22				22	22		22		0			
	QUALITY						SM 490YB												
LWEB-PL	WIDTH	1583.5	1583.5	1593.6	1593.6	1593.6	1593.6	1593.6	1593.6	1593.6	1593.6	1593.6	1593.6	1583.5	1583.5	1583.5	1583.5	1583.5	1583.5
	THICKNESS	15		15		15	15				15	15		15		15			
	QUALITY						SM 490YA												
RWEB-PL	WIDTH	1583.5	1583.5	1593.6	1593.6	1593.6	1593.6	1593.6	1593.6	1593.6	1593.6	1593.6	1593.6	1583.5	1583.5	1583.5	1583.5	1583.5	1583.5
	THICKNESS	15		15		15	15				15	15		15		15			
	QUALITY						SM 490YA												
L-FLG LOG. RIB	NOS	1		1		0	0				0	1		1		1			
	WIDTH	140		140		0	0				0	140		140		140			
	THICKNESS	16		16		0	0				0	16		16		16			
	QUALITY						SM 490YA									SM 570			
L-FLG, W=1049 MM		42		29		29	26				29	29		42		42			
L-FLG QUALITY							SM 490YB									SM 570			
U-FLG STRESS	σ	155	134	179	-107	-117	-119	-147	-147	-120	-118	-107	177	134	156	156	191	153	131
	σa	210	210	210	185	184	184	185	185	184	184	185	210	210	210	210	210	210	210
	σa−σ	55	76	31	77	67	65	38	38	65	66	77	33	76	54	54	19	57	79
L-FLG STRESS	σ	-168	-148	-196	137	153	163	194	194	163	154	137	-195	-148	-169	-169	-204	-170	-146
	σa	245	245	210	210	210	210	210	210	210	210	210	210	245	245	245	245	245	245
	σa−σ	77	97	14	73	57	47	16	16	47	56	73	15	97	76	76	41	75	99
WEB SHEAR STRESS	τ	30	29	30	33	27	27	14	15	6	6	12	63	61	63	63	64	26	29
	τa	120	120	120	120	120	120	120	120	120	120	120	120	120	120	120	120	120	120
	COMBINED	0.61	0.49	0.83	0.44	0.51	0.58	0.78	0.79	0.56	0.49	0.39	0.96	0.83	0.77	0.77	1.03	0.63	0.49
SECTION GOVERN		LEFT	RIGHT	J-4	RIGHT	RIGHT	J-5	MAX.	MAX.	J-6	LEFT	LEFT	J-7	LEFT	RIGHT	LEFT	MAX. L	MAX. R	RIGHT
NET U-FLG STRESS, σ				197									195						
NET L-FLG STRESS, σ							200			201									

		16		17			18				19				20		21		
SECTION ID		Sec-8		Sec-9			Sec-9				Sec-10				Sec-11		1		
U-FLG, W=1500 MM		32		24			24				18				15		15		
U-FLG QUALITY															SM 490YA				
U-FLG LOG. RIB	NOS	1		1			1				1				1		1		
	WIDTH	220		220			220				220				220		210		
	THICKNESS	22		22			22				22				22		22		
	QUALITY																		
LWEB-PL	WIDTH	1583.5	1583.5	1591.6	1591.6	1591.6	1591.6	1591.6	1591.6	1591.6	1597.6	1597.6	1597.6	1597.6	1600.7	912.4	912.4	912.4	912.4
	THICKNESS	15		15			15				15				24		24		
	QUALITY														SM 490YB				
RWEB-PL	WIDTH	1583.5	1583.5	1591.6	1591.6	1591.6	1591.6	1591.6	1591.6	1591.6	1597.6	1597.6	1597.6	1597.6	1600.7	912.4	912.4	912.4	912.4
	THICKNESS	15		15			15				15				24		24		
	QUALITY														SM 490YB				
L-FLG LOG. RIB	NOS	1		1			0				0				0		0		
	WIDTH	140		140			0				0				0		0		
	THICKNESS	16		16			0				0				0		0		
	QUALITY						SM 490YA												
L-FLG, W=1049 MM		42		29			29				17				14		18		
L-FLG QUALITY							SM 490YB								SM490YA		SM 490YB		
U-FLG STRESS	σ	131	118	154	-87	37	-87	37	-95	30	-119	36	-129	-72	-67	-86	-84	-60	-53
	σa	210	210	210	197	210	197	210	196	210	157	210	153	166	132	150	151	210	200
	σa−σ	79	92	56	110	173	110	173	101	180	38	174	24	95	65	64	67	150	147
L-FLG STRESS	σ	-146	-132	-178	106	-46	110	-47	119	-39	163	-45	181	98	87	111	101	58	-57
	σa	245	245	210	210	210	210	210	210	210	210	158	210	210	210	210	210	210	210
	σa−σ	99	113	32	104	164	100	163	91	171	47	113	29	112	123	99	109	152	153
WEB SHEAR STRESS	τ	29	28	28	30	12	30	12	23	6	23	7	11	14	9	15	16	17	53
	τa	120	120	120	120	120	120	120	120	120	120	120	120	120	120	120	120	120	120
	COMBINED	0.49	0.41	0.71	0.27	0.05	0.29	0.05	0.31	0.03	0.57	0.05	0.71	0.21	0.16	0.26	0.21	0.08	0.26
SECTION GOVERN		LEFT	RIGHT	J-8	RIGHT	RIGHT	LEFT	LEFT	RIGHT	RIGHT	J-9	J-9	MAX.	RIGHT	J-10	RIGHT	LEFT	RIGHT	RIGHT
NET U-FLG STRESS, σ				170								44							
NET L-FLG STRESS, σ											201				107				

W = WIDTH
H = HEIGHT
TH = THICKNESS
STRESS IN N/mm2

MAX. = MAXIMUM
MAX.R = MAXIMUM RIGHT
MAX.L = MAXIMUM LEFT

Gebang1 G-1

JAPAN INTERNATIONAL COOPERATION AGENCY / KATAHIRA & ENGINEERS INTERNATIONAL	DESIGNED BY	CHECKED BY	SUBMITTED BY	REPUBLIC OF INDONESIA MINISTRY OF PUBLIC WORKS DIRECTORATE GENERAL OF HIGHWAYS	PROJECT AND LOCATION :	SCALE :	DRAWING TITLE :	DRAWING NO :
	Name: S. MATSUI	Name: T. OKUMURA	Name: M. KIUCHI	APPROVED BY: Ir. HERRY VAZA M,Eng.Sc NIP. : 110038400	DETAILED DESIGN STUDY OF NORTH JAVA CORRIDOR FLYOVER PROJECT GEBANG FLYOVER - CONTRACT PACKAGE 2 (NAGREG - GEBANG) WEST JAVA PROVINCE	NOT TO SCALE	SECTIONAL DIMENSION OF GIRDER G2 P4 - P7	GST-014
	Sign	Sign	Sign	Sign		FULL SIZE A3		SHEET NO : 14 / 76
	Date	Date	Date	Date				

G-2

REQUIRED ————
CAPACITY – – – –

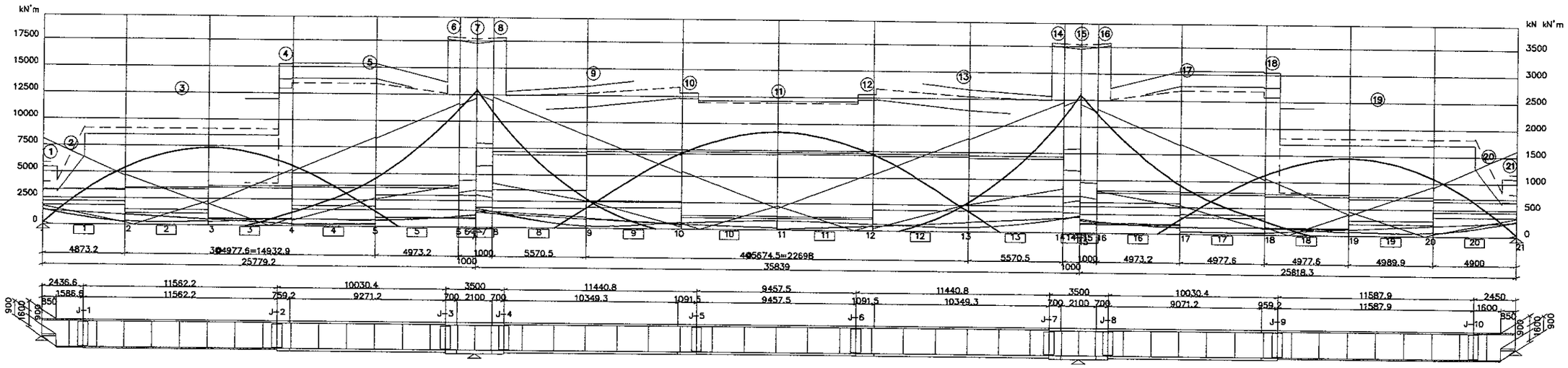

		1	2	3	4	5	6	7	8	9	10	11	12	13	14	15	16	17	18	19	20	21
SECTION ID		Sec-1	Sec-1	Sec-2	Sec-3	Sec-3	Sec-4	Sec-4	Sec-4	Sec-5	Sec-5	Sec-6	Sec-7	Sec-7	Sec-8	Sec-8	Sec-8	Sec-9	Sec-9	Sec-10	Sec-11	1
U-FLG, W=1500 MM		15	15	18	24	24	32	32	32	22	22	22	22	22	32	32	32	24	24	18	15	15
U-FLG QUALITY		SM 490YA		SM 490YB																		SM 490YA
U-FLG LOG. RIB	NOS	1	1	1	1	1	1	0	1	1	1	1	1	1	1	0	1	1	1	1	1	1
	WIDTH	220	220	220	220	220	220	0	200	200	200	200	200	200	200	0	220	220	220	220	220	210
	THICKNESS	22	22	22	22	22	22	0	22	22	22	22	22	22	22	0	22	22	22	22	22	22
	QUALITY											SM 490YB										
LWEB-PL	WIDTH	912.4 912.4 912.4	912.4 1600.7	1597.6 1597.6 1597.6 1597.6	1591.6 1591.6 1591.6 1591.6	1591.6 1591.6 1591.6	1583.5 1583.5 1583.5 1583.5	1583.5 1583.5 1583.5 1583.5	1583.5 1583.5 1583.5 1583.5	1593.6 1593.6 1593.6 1593.6	1593.6 1593.6 1593.6 1593.6	1593.6 1593.6 1593.6 1593.6	1593.6 1593.6 1593.6 1593.6	1593.6 1593.6 1593.6 1593.6	1583.5 1583.5 1583.5 1583.5	1583.5 1583.5 1583.5 1583.5	1583.5 1583.5 1583.5 1583.5	1591.6 1591.6 1591.6 1591.6	1591.6 1591.6 1591.6 1591.6	1597.6 1597.6 1597.6 1597.6	1600.7 921.3 921.3 912.4	912.4
	THICKNESS	24	24	15	15	15	15	15	15	15	15	15	15	15	15	15	15	15	15	15	24	24
	QUALITY	SM 490YB										SM 490YA										SM 490YB
RWEB-PL	WIDTH	912.4 912.4 912.4	912.4 1600.7	1597.6 1597.6 1597.6 1597.6	1591.6 1591.6 1591.6 1591.6	1591.6 1591.6 1591.6	1583.5 1583.5 1583.5 1583.5	1583.5 1583.5 1583.5 1583.5	1583.5 1583.5 1583.5 1583.5	1593.6 1593.6 1593.6 1593.6	1593.6 1593.6 1593.6 1593.6	1593.6 1593.6 1593.6 1593.6	1593.6 1593.6 1593.6 1593.6	1593.6 1593.6 1593.6 1593.6	1583.5 1583.5 1583.5 1583.5	1583.5 1583.5 1583.5 1583.5	1583.5 1583.5 1583.5 1583.5	1591.6 1591.6 1591.6 1591.6	1591.6 1591.6 1591.6 1591.6	1597.6 1597.6 1597.6 1597.6	1600.7 921.3 921.3 912.4	912.4
	THICKNESS	24	24	15	15	15	15	15	15	15	15	15	15	15	15	15	15	15	15	15	24	24
	QUALITY	SM 490YB										SM 490YA										SM 490YB
L-FLG LOG. RIB	NOS	0	0	0	0	1	1	1	1	1	0	0	0	1	1	1	1	1	0	0	0	0
	WIDTH	0	0	0	0	140	140	140	140	140	0	0	0	140	140	140	140	140	0	0	0	0
	THICKNESS	0	0	0	0	16	16	16	16	16	0	0	0	16	16	16	16	16	0	0	0	0
	QUALITY				SM 490YA			SM 570				SM 490YA				SM 570			SM 490YA			
L-FLG, W=1049 MM		18	14	17	29	29	42	42	42	29	29	26	29	29	42	42	42	29	29	17	14	18
L-FLG QUALITY		SM 490YB	SM490YA		SM 490YB			SM 570				SM 490YB				SM 570			SM 490YB		SM490YA	SM 490YB
U-FLG STRESS	σ	61 −50 −84	−86 −67	−72 −131 −121 33	−97 28 −92 34	−92 34 179	143 162 162 191	203 164 165 141	188 −109 −119 −121	−149 −122 −120	−110 183	140 163	162 201 194 164	164 145	182 −89 35 −89	35 −97 28 −121	33 −131 −73	−68 −85	−83 61 61			
	σc	210 210 150	150 131	166 152 158 210	196 210 197 210	197 210 210	210 210 210 210	210 210 210	210 184 184 184	185 184 184	185 210	210 210	210 210 210 210	210 210	210 197 210 197	210 198 210 157	210 152 166	131 151	151 210 210			
	σc−σ	149 150 67	64 64	93 21 35 177	99 182 105 176	105 176 31	67 48 48 19	7 46 45 69	22 76 65 63	35 62 64	75 27	70 47	48 9 18 46	46 65	28 108 175 108	175 99 182 35	177 21 93	63 65	68 149 149			
L-FLG STRESS	σ	55 −58 101	111 88	99 184 166 −41	122 −35 116 −42	112 −41 −194	−150 −167 −167 −197	−214 −176 −175	−153 −203 138	155 164 196	185 155	139 −200	−152 −174	−174 −212	−199 −169	−169 −151	−198 108	−44 112	−45 121	−36 166	−41 185	100 89 110 100 56 −59
	σc	210 210 210	210 210	210 210 210 175	210 210 210 210	210 210 210	245 245 245 245	245 245 245	210 210 210 210	210 210 210	210 210	245 245	245 245 245	245 245	210 210 210 210	210 210 210	175 210 210	210 210	210 210 210			
	σc−σ	155 152 109	99 122	111 26 44 135	88 175 94 168	98 169 18	95 78 78 48	31 69 70 92	7 72 55 46	14 45 55	71 10	93 71	71 33 48 76	76 94	12 102 168 98	165 89 174 44	133 25 110	121 100	110 154 151			
WEB SHEAR STRESS	τ	54 18 31	51 28	40 12 5 26	5 24 8 27	8 27 64	63 65 65 67	23 27 27 26	27 38 28 28	15 8	6 11	69 68	70 70 72	23 25	25 24	25 32 9 32	9 25 5	25 5	13 15	10 16	17 18	54
	τc	120 120 120	120 120	120 120 120 120	120 120 120 120	120 120 120	120 120 120 120	120 120 120	120 120 120 120	120 120 120	120 120	120 120	120 120 120	120 120	120 120 120 120	120 120 120 120	120 120	120 120	120 120 120			
	COMBINED	0.26 0.08 0.30	0.33 0.18	0.27 0.74 0.59 0.06	0.30 0.05 0.27 0.08	0.25 0.06 0.98	0.65 0.77 0.77 1.00	0.92 0.65 0.85 0.50	0.87 0.45 0.53	0.60 0.80 0.57	0.50 0.40 1.05	0.71 0.86	0.87 1.16 0.81 0.60	0.60 0.49	0.83 0.28 0.04 0.30	0.04 0.32 0.03	0.60 0.04 0.74 0.22	0.17 0.26	0.21 0.08 0.27			
SECTION GOVERN		LEFT LEFT RIGHT	LEFT J-1	LEFT MAX. J-2 J-2	LEFT LEFT RIGHT RIGHT	LEFT LEFT J-3	LEFT RIGHT LEFT MAX. L	MAX. R RIGHT LEFT	RIGHT J-4 RIGHT	RIGHT J-5 MAX.	J-6 LEFT LEFT	J-7 LEFT RIGHT	LEFT MAX. L MAX. R	RIGHT LEFT RIGHT	J-8 RIGHT RIGHT	LEFT LEFT RIGHT	RIGHT J-9 J-9	MAX. RIGHT	J-10 RIGHT LEFT	RIGHT RIGHT		
NET U-FLG STRESS, σ				40		196			208			203	204	201				200				
NET L-FLG STRESS, σ			108	205																205	40	109

W = WIDTH
H = HEIGHT
TH = THICKNESS
STRESS IN N/mm2

MAX. = MAXIMUM
MAX.R = MAXIMUM RIGHT
MAX.L = MAXIMUM LEFT

Gebang1 G-2

JICA JAPAN INTERNATIONAL COOPERATION AGENCY / KEI KATAHIRA & ENGINEERS INTERNATIONAL	DESIGNED BY	CHECKED BY	SUBMITTED BY	REPUBLIC OF INDONESIA MINISTRY OF PUBLIC WORKS DIRECTORATE GENERAL OF HIGHWAYS	PROJECT AND LOCATION :	SCALE :	DRAWING TITLE :	DRAWING NO :
	Name: S. MATSUI	Name: T. OKUMURA	Name: M. KIUCHI		DETAILED DESIGN STUDY OF NORTH JAVA CORRIDOR FLYOVER PROJECT GEBANG FLYOVER - CONTRACT PACKAGE 2 (NAGREG - GEBANG) WEST JAVA PROVINCE	NOT TO SCALE	SECTIONAL DIMENSION OF GIRDER G1 P7 - P12	GST-15
	Sign	Sign	Sign	APPROVED BY: Ir. HERRY VAZA M.Eng.Sc NIP. : 110038400		FULL SIZE A3		SHEET NO : 15 / 76
	Date	Date	Date	Sign / Date				

G-1

REQUIRED ———

CAPACITY - - - - - -

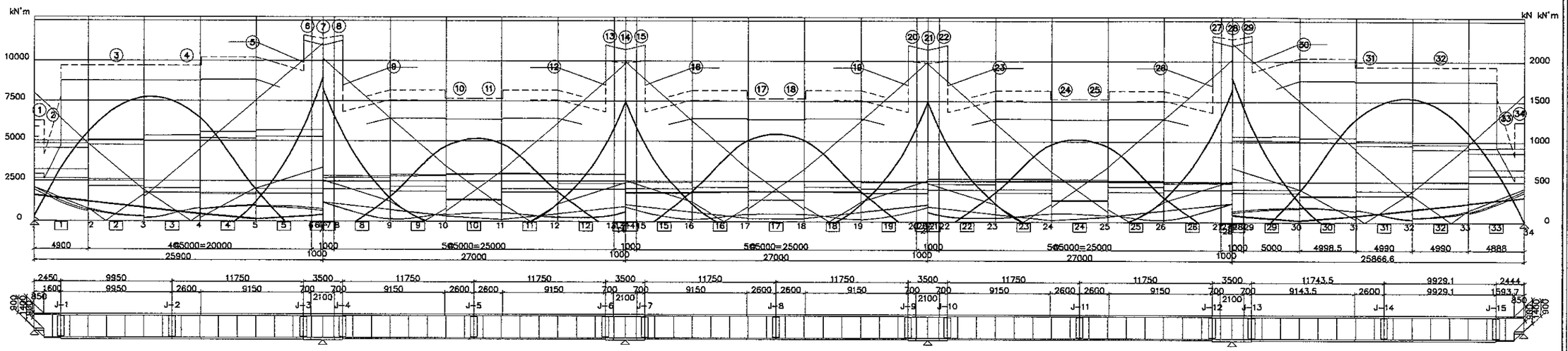

		1		2	3	4	5	6	7	8	9	10	11	12	13	14	15	16	17	18	19	20	21	22	23	24	25	26	27	28	29	30	31	32	33	34
SECTION ID		Sec-1		Sec-1	Sec-2	Sec-3	Sec-3	Sec-3	Sec-4	Sec-5	Sec-5	Sec-5	Sec-6	Sec-6	Sec-6	Sec-7	Sec-8	Sec-8	Sec-8	Sec-9	Sec-9	Sec-9	Sec-10	Sec-11	Sec-11	Sec-11	Sec-12	Sec-12	Sec-12	Sec-13	Sec-14	Sec-14	Sec-14	Sec-15	Sec-16	Sec-16
U-FLG, W=1500 MM		14		14	20	20	20	23	23	23	17	17	17	17	23	23	23	17	17	17	17	23	23	23	17	17	17	17	23	23	23	20	20	20	14	14
U-FLG QUALITY		SM 490YA			SM 490YB																														SM 490YA	
U-FLG LOG. RIB	NOS	1		1	1	1	1	1	0	1	1	1	1	1	1	0	1	1	1	1	1	1	0	1	1	1	1	1	1	0	1	1	1	1	1	1
	WIDTH	190		190	190	190	190	190	0	160	160	160	160	160	160	0	160	160	160	160	160	160	0	160	160	160	160	160	160	0	190	190	190	190	190	190
	THICKNESS	19		19	19	19	19	19	0	19	19	19	19	19	19	0	19	19	19	19	19	19	0	19	19	19	19	19	19	0	19	19	19	19	19	19
	QUALITY	SM 490YB																																		
LWEB-PL	WIDTH	907.1	907.1	907.1	1399.7	1393.7	1393.7	1393.7	1390.6	1390.6	1390.6	1390.6	1396.7	1396.7	1396.7	1396.7	1396.7	1390.6	1390.6	1390.6	1390.6	1396.7	1396.7	1396.7	1396.7	1396.7	1396.7	1396.7	1390.6	1390.6	1390.6	1390.6	1393.7	1393.7	1393.7	1393.7	1399.7	907.1	907.1
	THICKNESS	25		25	14	14	14	14	14	14	14	14	14	14	14	14	14	14	14	14	14	14	14	14	14	14	14	14	14	14	14	14	14	14	25	25
	QUALITY	SM 490YB																																		
RWEB-PL	WIDTH	907.1	907.1	907.1	1399.7	1393.7	1393.7	1393.7	1393.7	1390.6	1390.6	1390.6	1390.6	1396.7	1396.7	1396.7	1396.7	1396.7	1396.7	1396.7	1396.7	1396.7	1396.7	1396.7	1396.7	1396.7	1396.7	1396.7	1390.6	1390.6	1390.6	1390.6	1393.7	1393.7	1393.7	1393.7	1399.7	907.1	907.1
	THICKNESS	25		25	14	14	14	14	14	14	14	14	14	14	14	14	14	14	14	14	14	14	14	14	14	14	14	14	14	14	14	14	14	14	25	25
	QUALITY	SM 490YB																																		
L-FLG LOG. RIB	NOS	0		0	0	0	1	1	1	1	1	0	0	1	1	1	1	1	0	0	1	1	1	1	1	0	0	1	1	1	1	1	0	0	0	0
	WIDTH	0		0	0	0	160	160	160	160	160	0	0	160	160	160	160	160	0	0	160	160	160	160	160	0	0	160	160	160	160	160	0	0	0	0
	THICKNESS	0		0	0	0	16	16	16	16	16	0	0	16	16	16	16	16	0	0	16	16	16	16	16	0	0	16	16	16	16	16	0	0	0	0
	QUALITY	SM 490YA																																		
L-FLG, W=1049 MM		25		12	24	24	24	32	32	32	17	17	17	17	26	26	26	17	17	17	17	26	26	26	17	17	17	17	32	32	32	24	24	24	12	25
L-FLG QUALITY		SM 490YB		SM490YA	SM 490YB																														SM490YA	SM 490YB
U-FLG STRESS	σ	-62	-68	-93	-93	-143	-146	-134	145	149	186	198	153	165	-111	-125	-125	-117	125	120	162	179	135	140	-122	-133	-133	-122	140	135	179	164	121	126	-117	-125	-125	-111	166	154	199	184	148	143	-133	-146	-143	-91	-86	-73
	σa	195	192	149	123	167	169	172	210	210	210	210	210	210	146	146	146	147	210	210	210	210	210	210	145	145	145	145	210	210	210	210	210	210	147	146	146	146	210	210	210	210	210	210	172	169	167	123	153	182
	σa-σ	133	124	56	30	24	23	38	65	61	24	12	57	45	35	21	21	30	85	90	48	31	75	70	24	12	12	24	70	75	31	46	89	84	29	20	21	35	44	56	11	26	62	67	39	23	24	32	66	109
L-FLG STRESS	σ	72	-75	102	122	183	185	162	-166	-158	-193	-190	-150	-183	139	163	164	146	-150	-138	-180	-189	-145	-155	147	169	169	147	-156	-145	-189	-180	-137	-150	145	163	162	138	-182	-149	-190	-191	-156	-164	161	184	183	119	95	-65
	σa	210	210	210	210	210	210	210	210	210	210	210	210	197	210	210	210	210	195	210	210	210	210	196	210	210	210	210	196	210	210	210	210	195	210	210	210	210	197	210	210	210	210	210	210	210	210	210	210	210
	σa-σ	138	135	108	88	27	25	48	44	52	17	20	60	14	71	47	46	64	45	72	30	21	65	41	63	41	41	63	41	65	21	30	73	46	65	47	48	72	15	61	20	19	54	46	49	26	27	91	115	145
WEB SHEAR STRESS	τ	55	24	52	31	20	16	11	66	68	71	26	24	23	31	19	18	15	62	63	67	25	24	23	29	18	18	14	63	64	68	24	22	22	28	18	17	13	65	65	69	28	27	26	34	25	19	14	24	56
	τa	120	120	120	120	120	120	120	120	120	120	120	120	120	120	120	120	120	120	120	120	120	120	120	120	120	120	120	120	120	120	120	120	120	120	120	120	120	120	120	120	120	120	120	120	120	120	120	120	120
	COMBINED	0.30	0.14	0.33	0.34	0.74	0.73	0.55	0.75	0.72	1.01	0.83	0.51	0.77	0.45	0.58	0.58	0.46	0.66	0.59	0.89	0.76	0.46	0.56	0.49	0.61	0.61	0.47	0.70	0.64	0.96	0.70	0.42	0.52	0.48	0.57	0.57	0.41	0.91	0.69	1.03	0.78	0.53	0.58	0.59	0.75	0.73	0.30	0.20	0.31
SECTION GOVERN		LEFT	LEFT	RIGHT	J-1	MAX.	J-2	LEFT	J-3	RIGHT	MAX. L	MAX. R	LEFT	J-4	RIGHT	J-5	MAX.	LEFT	J-6	RIGHT	MAX. L	MAX. R	LEFT	J-7	RIGHT	MAX.	J-8	LEFT	J-9	RIGHT	MAX. L	MAX. R	LEFT	J-10	RIGHT	MAX.	J-11	LEFT	J-12	RIGHT	MAX. L	MAX. R	LEFT	J-13	RIGHT	J-14	MAX.	J-15	LEFT	RIGHT
NET U-FLG STRESS, σ									178					180					152					171					171					154					181					176					
NET L-FLG STRESS, σ					148		200									177										182										175									199		144		

W = WIDTH
H = HEIGHT
TH = THICKNESS
STRESS IN N/mm2

MAX. = MAXIMUM
MAX.R = MAXIMUM RIGHT
MAX.L = MAXIMUM LEFT

Gebang2 G-1

JAPAN INTERNATIONAL COOPERATION AGENCY / KATAHIRA & ENGINEERS INTERNATIONAL	DESIGNED BY: Name S. MATSUI, Sign, Date	CHECKED BY: Name T. OKUMURA, Sign, Date	SUBMITTED BY: Name M. KIUCHI, Sign, Date	REPUBLIC OF INDONESIA MINISTRY OF PUBLIC WORKS DIRECTORATE GENERAL OF HIGHWAYS APPROVED BY: Ir. HERRY VAZA M,Eng.Sc, NIP. : 110038400, Sign, Date	PROJECT AND LOCATION : DETAILED DESIGN STUDY OF NORTH JAVA CORRIDOR FLYOVER PROJECT GEBANG FLYOVER - CONTRACT PACKAGE 2 (NAGREG - GEBANG) WEST JAVA PROVINCE	SCALE : NOT TO SCALE FULL SIZE A3	DRAWING TITLE : SECTIONAL DIMENSION OF GIRDER G2 P7 - P12	DRAWING NO : GST-16 SHEET NO : 16 / 76

G-2

REQUIRED ———

CAPACITY - - - - -

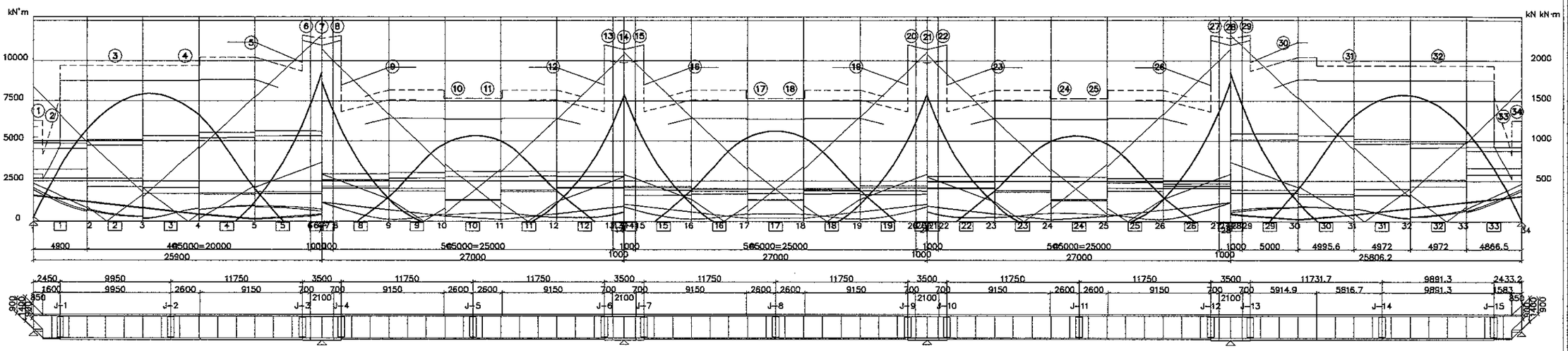

		1		2	3	4	5		6	7		8	9		10	11	12		13	14		15	16		17	18	19		20	21		22	23		24	25		26	27		28		29	30		31	32	33	34
SECTION ID		Sec-1		Sec-1	Sec-2	Sec-3	Sec-3		Sec-4	Sec-4		Sec-4	Sec-5		Sec-5	Sec-6	Sec-6		Sec-6	Sec-7		Sec-8	Sec-8		Sec-8	Sec-9	Sec-9		Sec-9	Sec-10		Sec-11	Sec-11		Sec-11	Sec-12		Sec-12	Sec-12		Sec-13		Sec-14	Sec-14		Sec-14	Sec-15	Sec-16	Sec-16
U-FLG, W=1500 MM		14		14	20	20	20		23	23		23	17		17	17	17		23	23		23	17		17	17	17		23	23		23	17		17	17		17	23		23		23	20		20	20	14	14
U-FLG QUALITY		SM 490YA																							SM 490YB																								SM 490YA	
U-FLG LOG. RIB	NOS	1		1	1	1	1		1	0		1	1		1	1	1		1	0		1	1		1	1	1		1	0		1	1		1	1		1	1		0		1	1		1	1	1	1
	WIDTH	190		190	190	190	190		190	0		160	160		160	160	160		160	0		160	160		160	160	160		160	0		160	160		160	160		160	160		0		190	190		190	190	190	190
	THICKNESS	19		19	19	19	19		19	0		19	19		19	19	19		19	0		19	19		19	19	19		19	0		19	19		19	19		19	19		0		19	19		19	19	19	19
	QUALITY	SM 490YB																																																
LWEB-PL	WIDTH	907.1	907.1	907.1	1399.7	1393.7	1393.7	1393.7	1393.7	1390.6	1390.6	1390.6	1390.6	1396.7	1396.7	1396.7	1396.7	1396.7	1396.7	1390.6	1390.6	1390.6	1390.6	1396.7	1396.7	1396.7	1396.7	1396.7	1396.7	1390.6	1390.6	1390.6	1390.6	1396.7	1396.7	1396.7	1396.7	1396.7	1396.7	1390.6	1390.6	1390.6	1390.6	1393.7	1393.7	1393.7	1393.7	1399.7	907.1	907.1
	THICKNESS	25		25	14	14	14		14	14		14	14		14	14	14		14	14		14	14		14	14	14		14	14		14	14		14	14		14	14		14		14	14		14	14	25	25
	QUALITY	SM 490YB																							SM 490YA																								SM 490YB	
RWEB-PL	WIDTH	907.1	907.1	907.1	1399.7	1393.7	1393.7	1393.7	1393.7	1390.6	1390.6	1390.6	1390.6	1396.7	1396.7	1396.7	1396.7	1396.7	1396.7	1390.6	1390.6	1390.6	1390.6	1396.7	1396.7	1396.7	1396.7	1396.7	1396.7	1390.6	1390.6	1390.6	1390.6	1396.7	1396.7	1396.7	1396.7	1396.7	1396.7	1390.6	1390.6	1390.6	1390.6	1393.7	1393.7	1393.7	1393.7	1399.7	907.1	907.1
	THICKNESS	25		25	14	14	14		14	14		14	14		14	14	14		14	14		14	14		14	14	14		14	14		14	14		14	14		14	14		14		14	14		14	14	25	25
	QUALITY	SM 490YB																							SM 490YA																								SM 490YB	
L-FLG LOG. RIB	NOS	0		0	0	0	1		1	1		1	1		0	0	1		1	1		1	1		0	0	1		1	1		1	1		0	0		1	1		1		1	1		1	0	0	0	0
	WIDTH	0		0	0	0	160		160	160		160	160		0	0	160		160	160		160	160		0	0	160		160	160		160	160		0	0		160	160		160		160	160		160	0	0	0	0
	THICKNESS	0		0	0	0	16		16	16		16	16		0	0	16		16	16		16	16		0	0	16		16	16		16	16		0	0		16	16		16		16	16		16	0	0	0	0
	QUALITY	SM 490YA																																																
L-FLG, W=1049 MM		25		12	24	24	24		32	32		32	17		17	17	17		26	26		26	17		17	17	17		26	26		26	17		17	17		17	32		32		32	24		24	24	12	25
L-FLG QUALITY		SM 490YB		SM490YA																					SM 490YB																								SM490YA	SM 490YB
U-FLG STRESS	σ	75	-65	-92	-94	-146	-149	-136	148	153	192	207	160	171	-114	-128	-128	-120	131	126	170	187	141	146	-125	-137	-137	-125	146	141	188	172	127	132	-121	-129	-129	-114	172	160	207	189	151	146	-88	-148	-145	-92	-87	-73
	σa	210	196	149	122	167	169	172	210	210	210	210	210	210	145	146	146	146	210	210	210	210	210	210	145	145	145	145	210	210	210	210	210	210	146	146	146	145	210	210	210	210	210	210	182	169	167	123	152	183
	σa-σ	135	131	57	29	21	19	36	62	57	18	3	50	39	32	18	17	26	79	84	40	23	69	64	20	8	8	20	64	69	22	38	83	78	26	17	17	31	38	50	3	21	59	64	95	21	22	31	65	110
L-FLG STRESS	σ	72	-76	103	125	188	190	167	-169	-161	-198	-198	-155	-189	143	169	169	151	-156	-143	-188	-198	-151	-161	151	174	174	151	-162	-151	-198	-188	-143	-156	150	168	167	142	-189	-155	-198	-195	-158	-166	110	188	186	121	97	-65
	σa	210	210	210	210	210	210	210	210	210	210	210	210	197	210	210	210	210	195	210	210	210	210	196	210	210	210	210	196	210	210	210	210	195	210	210	210	210	197	210	210	210	210	210	210	210	210	210	210	210
	σa-σ	138	134	107	85	22	20	43	41	49	12	12	55	7	67	41	41	59	39	67	22	12	59	35	59	36	36	59	34	59	12	22	67	39	60	42	43	68	8	55	12	15	52	44	100	22	24	89	113	145
WEB SHEAR STRESS	τ	57	25	54	32	21	16	11	67	69	73	28	26	25	30	19	18	15	63	65	69	27	26	25	29	18	18	15	65	66	70	26	25	24	27	18	17	14	66	67	71	30	29	28	45	25	19	15	24	57
	τa	120	120	120	120	120	120	120	120	120	120	120	120	120	120	120	120	120	120	120	120	120	120	120	120	120	120	120	120	120	120	120	120	120	120	120	120	120	120	120	120	120	120	120	120	120	120	120	120	120
	COMBINED	0.32	0.14	0.34	0.36	0.78	0.77	0.58	0.77	0.75	1.05	0.90	0.55	0.83	0.48	0.62	0.62	0.49	0.70	0.63	0.96	0.84	0.51	0.61	0.52	0.65	0.65	0.49	0.75	0.68	1.04	0.77	0.46	0.56	0.50	0.61	0.61	0.44	0.97	0.74	1.11	0.82	0.55	0.60	0.33	0.77	0.76	0.32	0.21	0.32
SECTION GOVERN		LEFT	LEFT	RIGHT	J-1	MAX.	J-2	LEFT	J-3	RIGHT	MAX. L	MAX. R	LEFT	J-4	RIGHT	J-5	MAX.	LEFT	J-6	RIGHT	MAX. L	MAX. R	LEFT	J-7	RIGHT	MAX.	J-8	LEFT	J-9	RIGHT	MAX. L	MAX. R	LEFT	J-10	RIGHT	MAX.	J-11	LEFT	J-12	RIGHT	MAX. L	MAX. R	LEFT	J-13	RIGHT	J-14	MAX.	J-15	LEFT	RIGHT
NET U-FLG STRESS, σ									183					187					159					178					178					161					187					180					
NET L-FLG STRESS, σ					151		205									182											188									181										203		147		

W = WIDTH
H = HEIGHT
TH = THICKNESS
STRESS IN N/mm2

MAX. = MAXIMUM
MAX.R = MAXIMUM RIGHT
MAX.L = MAXIMUM LEFT

Gebang2 G-2

JAPAN INTERNATIONAL COOPERATION AGENCY / KATAHIRA & ENGINEERS INTERNATIONAL	DESIGNED BY	CHECKED BY	SUBMITTED BY	REPUBLIC OF INDONESIA MINISTRY OF PUBLIC WORKS DIRECTORATE GENERAL OF HIGHWAYS	PROJECT AND LOCATION :	SCALE :	DRAWING TITLE :	DRAWING NO :
	Name: S. MATSUI	Name: T. OKUMURA	Name: M. KIUCHI		DETAILED DESIGN STUDY OF NORTH JAVA CORRIDOR FLYOVER PROJECT GEBANG FLYOVER - CONTRACT PACKAGE 2 (NAGREG - GEBANG) WEST JAVA PROVINCE	1 : 60	SECTIONAL DIMENSION OF GIRDER P5	GST-17
	Sign	Sign	Sign	APPROVED BY: Ir. HERRY VAZA M,Eng.Sc NIP. : 110038400 — Sign				SHEET NO :
	Date	Date	Date	Date		FULL SIZE A3		17 / 76

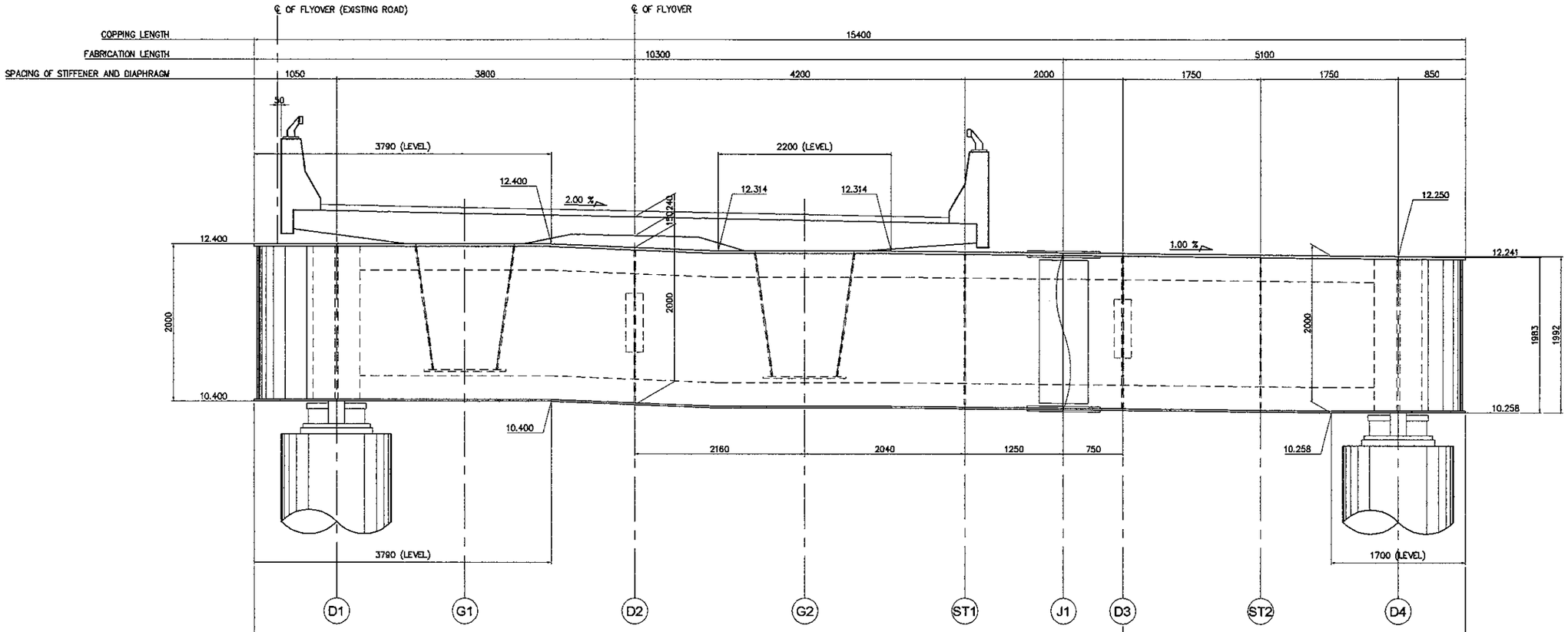

U-FLG WIDTH	2100	2100~1700
U-FLG THICKNESS	32	32
U-FLG QUALITY	SM 490YB	SM 400A
URIB-FLG THICKNESS	2x300x30	2x300x30
URIB-FLG QUALITY	SM 490YB	SM 400A
WEB-FLG THICKNESS	19	19
WEB-FLG QUALITY	SM 490YB	SM 400A
L-FLG WIDTH	2100	2100~1700
L-FLG THICKNESS	22	22
L-FLG QUALITY	SM 490YB	SM 400A
LRIB-FLG THICKNESS	2x300x30	2x300x30
LRIB-FLG QUALITY	SM 490YB	SM 400A

SECTIONAL DIMENSION OF GIRDER P5

SCALE : 1:60

JAPAN INTERNATIONAL COOPERATION AGENCY KATAHIRA & ENGINEERS INTERNATIONAL	DESIGNED BY	CHECKED BY	SUBMITTED BY	REPUBLIC OF INDONESIA MINISTRY OF PUBLIC WORKS DIRECTORATE GENERAL OF HIGHWAYS	PROJECT AND LOCATION :	SCALE :	DRAWING TITLE :	DRAWING NO :
	Name: S. MATSUI	Name: T. OKUMURA	Name: M. KIUCHI		DETAILED DESIGN STUDY OF NORTH JAVA CORRIDOR FLYOVER PROJECT GEBANG FLYOVER - CONTRACT PACKAGE 2 (NAGREG - GEBANG) WEST JAVA PROVINCE	1 : 60	SECTIONAL DIMENSION OF GIRDER P6	GST-18
	Sign	Sign	Sign	APPROVED BY: Ir. HERRY VAZA M,Eng.Sc NIP. : 110038400 — Sign				SHEET NO :
	Date	Date	Date	Date		FULL SIZE A3		18 / 76

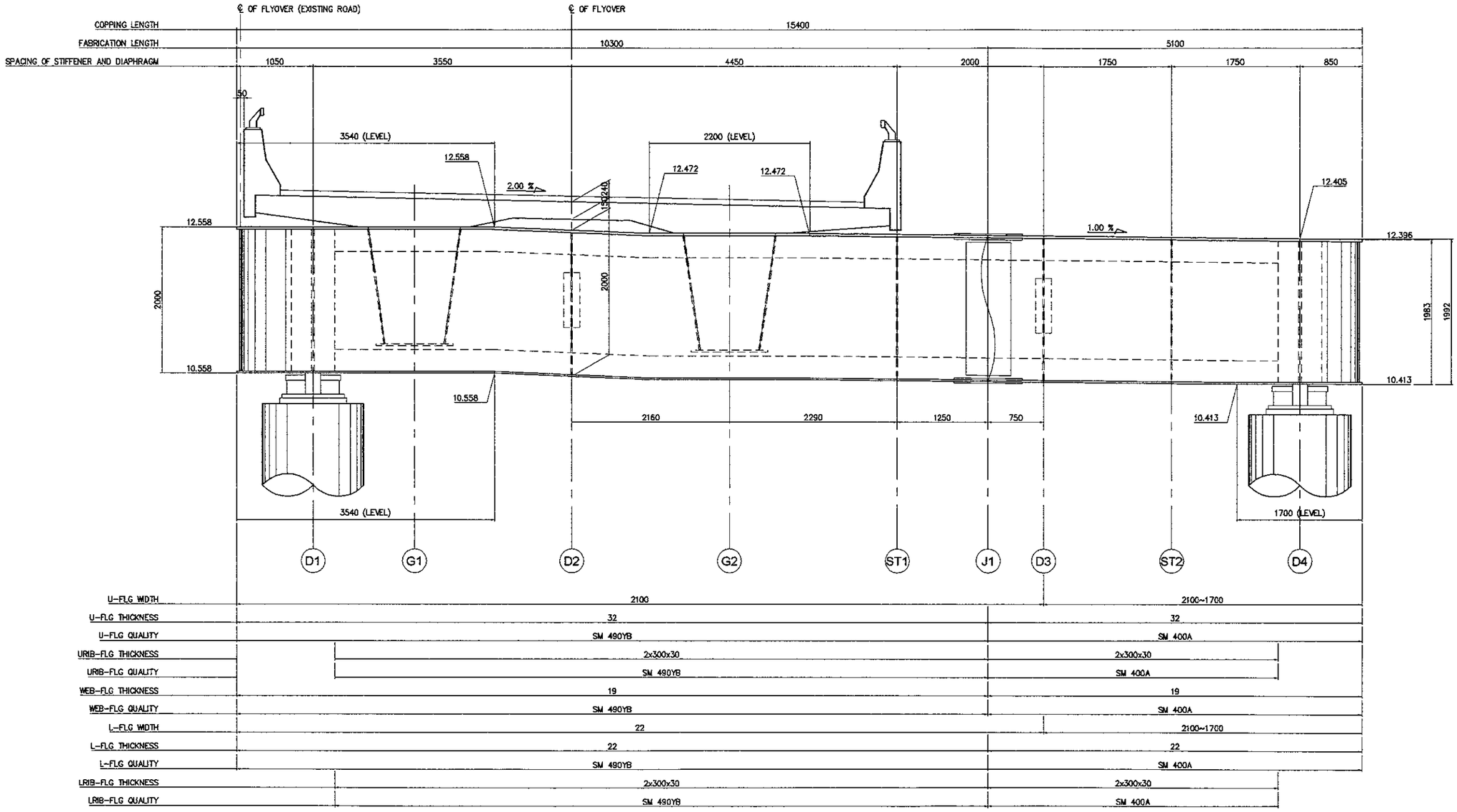

SECTIONAL DIMENSION OF GIRDER P6

SCALE : 1:60

JICA JAPAN INTERNATIONAL COOPERATION AGENCY / KEI KATAHIRA & ENGINEERS INTERNATIONAL	DESIGNED BY	CHECKED BY	SUBMITTED BY	REPUBLIC OF INDONESIA MINISTRY OF PUBLIC WORKS DIRECTORATE GENERAL OF HIGHWAYS	PROJECT AND LOCATION :	SCALE :	DRAWING TITLE :	DRAWING NO :
	Name: S. MATSUI	Name: T. OKUMURA	Name: M. KIUCHI		DETAILED DESIGN STUDY OF NORTH JAVA CORRIDOR FLYOVER PROJECT GEBANG FLYOVER - CONTRACT PACKAGE 2 (NAGREG - GEBANG) WEST JAVA PROVINCE	1 : 000	SECTIONAL DIMENSION OF GIRDER P8 & P11	GST-19
	Sign	Sign	Sign	APPROVED BY: Ir. HERRY VAZA M,Eng.Sc NIP. : 110038400 — Sign				SHEET NO :
	Date	Date	Date	Date		FULL SIZE A3		19 / 76

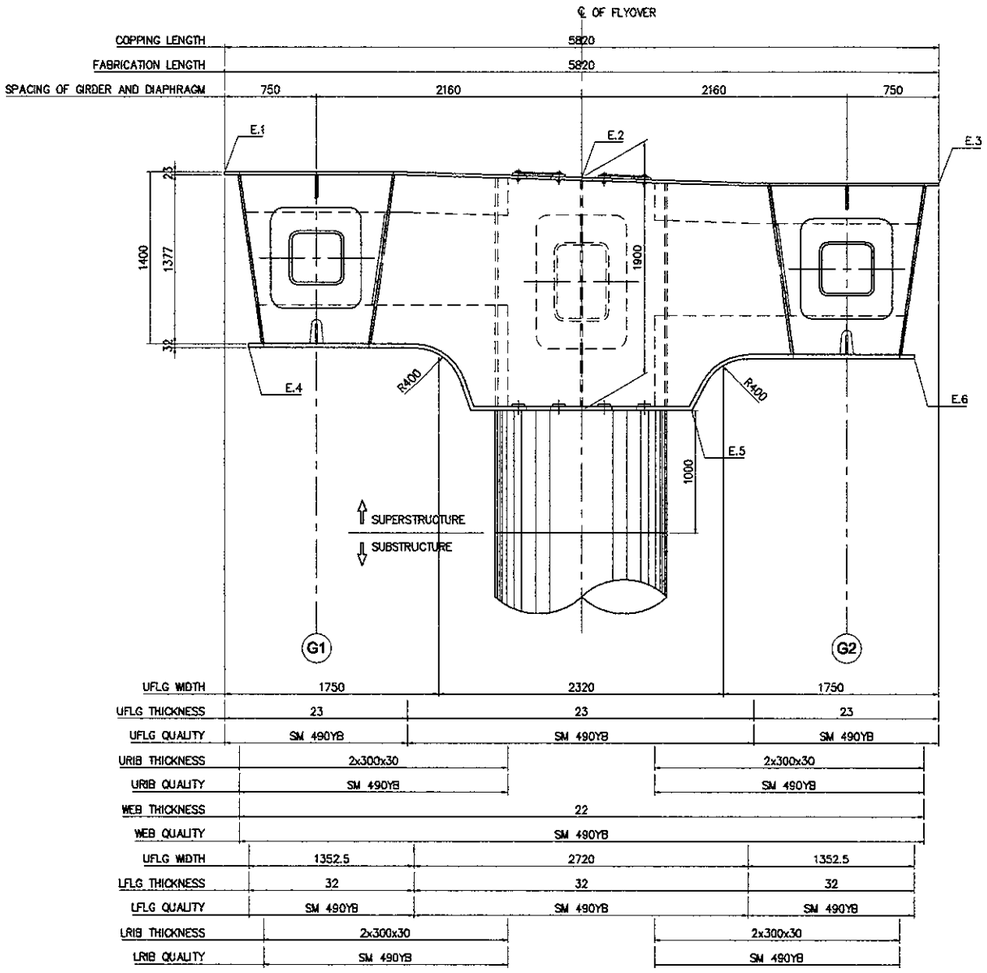

ELEVATION

PIER	E.1	E.2	E.3	E.4	E.5	E.6
P8	12.0766	12.0334	11.9902	10.6446	10.1334	10.5582
P11	11.3397	11.2965	11.2533	9.9077	9.3965	9.8213

SECTIONAL DIMENSION OF GIRDER P8 & P11

SCALE : 1:50

JAPAN INTERNATIONAL COOPERATION AGENCY KATAHIRA & ENGINEERS INTERNATIONAL	DESIGNED BY	CHECKED BY	SUBMITTED BY	REPUBLIC OF INDONESIA MINISTRY OF PUBLIC WORKS DIRECTORATE GENERAL OF HIGHWAYS	PROJECT AND LOCATION :	SCALE :	DRAWING TITLE :	DRAWING NO :
	Name: S. MATSUI	Name: T. OKUMURA	Name: M. KIUCHI		DETAILED DESIGN STUDY OF NORTH JAVA CORRIDOR FLYOVER PROJECT GEBANG FLYOVER - CONTRACT PACKAGE 2 (NAGREG - GEBANG) WEST JAVA PROVINCE	1 : 50	SECTIONAL DIMENSION OF GIRDER P9 & P10	GST-20
	Sign	Sign	Sign	APPROVED BY: Ir. HERRY VAZA M,Eng.Sc NIP. : 110038400 — Sign				SHEET NO :
	Date	Date	Date	Date		FULL SIZE A3		20 / 76

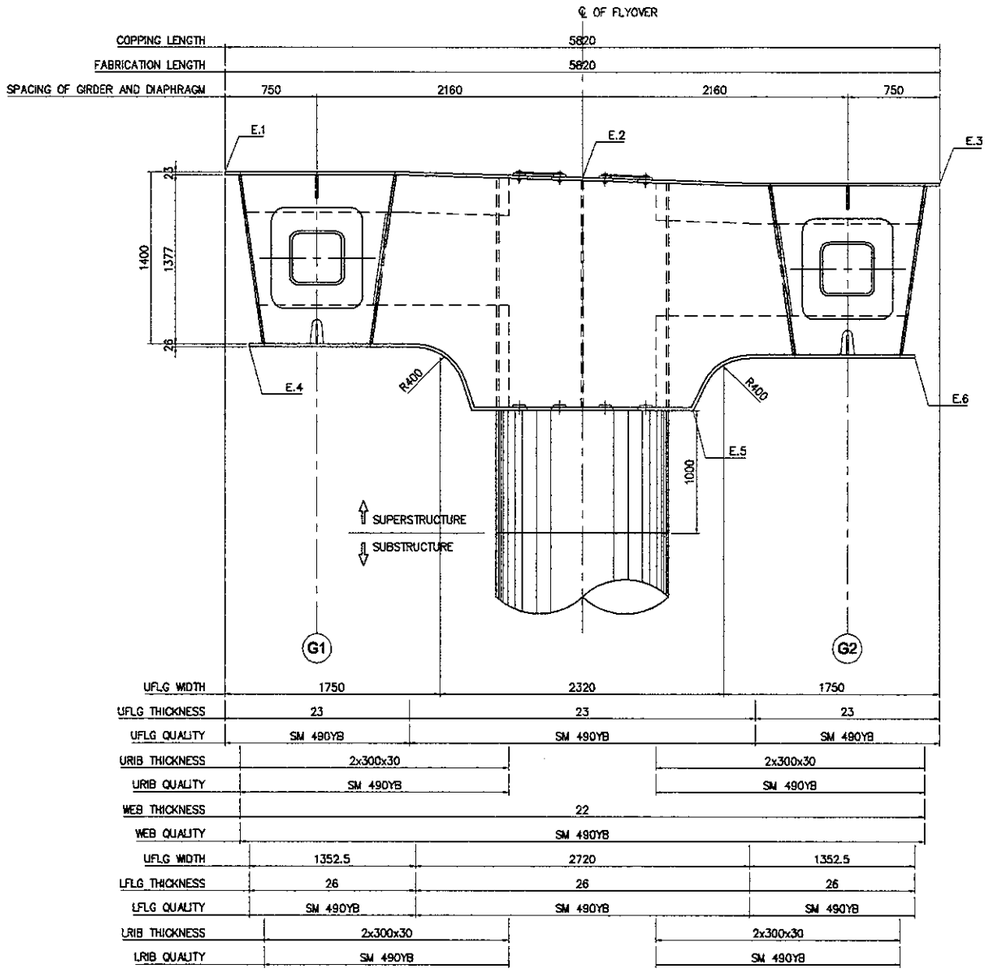

ELEVATION

PIER	E.1	E.2	E.3	E.4	E.5	E.6
P9	11.8309	11.7877	11.7445	10.4049	9.8877	10.3185
P10	11.5853	11.5421	11.4989	10.1593	9.6421	10.0729

SECTIONAL DIMENSION OF GIRDER P9 & P11

SCALE : 1:50