JAPAN INTERNATIONAL
COOPERATION AGENCY

DIRECTORATE GENERAL OF HIGHWAY
MINISTRY OF PUBLIC WORKS
REPUBLIC OF INDONESIA

DRAINAGE

KATAHIRA & ENGINEERS INTERNATIONAL

JICA JAPAN INTERNATIONAL COOPERATION AGENCY / KEI KATAHIRA & ENGINEERS INTERNATIONAL	DESIGNED BY	CHECKED BY	SUBMITTED BY	REPUBLIC OF INDONESIA MINISTRY OF PUBLIC WORKS DIRECTORATE GENERAL OF HIGHWAYS	PROJECT AND LOCATION :	SCALE :	DRAWING TITLE :	DRAWING NO :
	Name: R. UENO	Name: T. OKUMURA	Name: M. KIUCHI		DETAILED DESIGN STUDY OF NORTH JAVA CORRIDOR FLYOVER PROJECT GEBANG FLYOVER - CONTRACT PACKAGE 2 (NAGREG - GEBANG) WEST JAVA PROVINCE	N.T.S	DRAINAGE SCHEDULE AT GRADE	GDG-001
	Sign	Sign	Sign	APPROVED BY: Ir. HERRY VAZA M.Eng.Sc				SHEET NO :
	Date	Date	Date	NIP. : 110038400 Sign / Date		FULL SIZE A3		01 / 17

DRAINAGE SLOPE RIGHT

FROM MH	TO MH	TYPE OF U'DITCH/PIPE	LENGTH (m)	SLOPE (%)	FINISHED AT MANHOLE (m) UPSTREAM	FINISHED AT MANHOLE (m) DOWNSTREAM	INVERT ELEV. (m) UPSTREAM	INVERT ELEV. (m) DOWNSTREAM
DRAINAGE SLOPE DMH-03 TO DMH-01A								
DMH-03	DMH-02	U'DITCH DS 4	20	0.46	2.608	2.660	2.014	1.888
DMH-02	DMH-01	U'DITCH DS 4	24	0.43	2.660	2.747	1.888	1.755
DMH-01	DMH-01B	U'DITCH DS 4	24	0.47	2.747	2.850	1.755	1.670
DMH-01B	DMH-01A	U'DITCH DS 4	24	0.34	2.850	2.905	1.670	1.591
DMH-01A	EXISTING	RCP ø600 (A)	1.7	–	2.905	–	1.591	–
DRAINAGE SLOPE DMH-04 TO DMH-17								
DMH-04	DMH-05	U'DITCH DS 4	20	0.39	2.625	2.602	2.032	1.953
DMH-05	DMH-06	U'DITCH DS 4	12	0.30	2.602	2.630	1.953	1.917
DMH-06	DMH-07	RCP ø800 (A)	20	0.20	2.630	2.574	1.120	1.083
DMH-07	DMH-08	RCP ø800 (A)	20	0.20	2.574	2.624	1.083	1.045
DMH-08	DMH-09	RCP ø800 (A)	28.2	0.20	2.624	2.682	1.045	0.992
DMH-09	DMH-10	RCP ø800 (A)	20	0.20	2.682	2.722	0.992	0.954
DMH-10	DMH-11	RCP ø800 (A)	20	0.20	2.722	2.762	0.954	0.917
DMH-11	DMH-12	RCP ø800 (A)	20	0.20	2.762	2.803	0.917	0.880
DMH-12	DMH-13	RCP ø800 (A)	20	0.20	2.803	2.888	0.880	0.842
DMH-13	DMH-14	RCP ø800 (A)	17	0.20	2.888	3.021	0.842	0.810
DMH-14	DMH-15	RCP ø800 (A)	24	0.20	3.021	3.251	0.810	0.765
DMH-15	DMH-16	RCP ø800 (A)	18.8	0.20	3.251	3.431	0.765	0.730
DMH-16	DMH-17	RCP ø800 (A)	20	0.20	3.431	3.676	0.730	0.691
DMH-17	RIVER	RCP ø800 (A)	61	0.20	3.676	–	0.691	–
DRAINAGE SLOPE DMH-26A TO DMH-20								
DMH-26A	DMH-26	U'DITCH DS 4	9.5	0.30	3.446	3.417	2.789	2.760
DMH-26	DMH-25	U'DITCH DS 4	9.2	1.02	3.417	3.392	2.760	2.686
DMH-25	DMH-24	U'DITCH DS 4	20	0.79	3.392	3.290	2.686	2.497
DMH-24	DMH-23	U'DITCH DS 4	20	0.60	3.290	3.230	2.497	2.347
DMH-23	DMH-22	U'DITCH DS 4	16.3	0.64	3.230	3.288	2.347	2.212
DMH-22	DMH-21	U'DITCH DS 4	24	0.89	3.288	3.541	2.212	1.970
DMH-21	DMH-20	U'DITCH DS 4	20	1.49	3.541	3.910	1.970	1.670
DMH-20	RIVER	U'DITCH DS 4A	39.6	1.49	3.910	–	1.670	–
DRAINAGE SLOPE DMH-27A TO DMH-33								
DMH-27A	DMH-27	U'DITCH DS 4	10	0.30	3.458	3.428	2.949	2.919
DMH-27	DMH-28	U'DITCH DS 4	15.8	0.69	3.428	3.390	2.919	2.801
DMH-28	DMH-29	U'DITCH DS 4	20	0.63	3.390	3.288	2.801	2.676
DMH-29	DMH-30	U'DITCH DS 4	20	0.56	3.288	3.155	2.676	2.564
DMH-30	DMH-31	U'DITCH DS 4	20	0.82	3.155	3.020	2.564	2.396
DMH-31	DMH-32	U'DITCH DS 4	20	0.66	3.020	2.890	2.396	2.265
DMH-32	DMH-33	U'DITCH DS 4	20	0.67	2.890	2.787	2.265	2.130
DMH-33	EXISTING	U'DITCH DS 4	23	0.39	2.787	–	2.130	–
DRAINAGE SLOPE DMH-50 TO DMH-35								
EXISTING	DMH-50	U'DITCH DS 4	28	0.20	–	2.340	–	1.526
DMH-50	DMH-49	U'DITCH DS 4	16	0.20	2.340	2.340	1.526	1.494
DMH-49	DMH-48	U'DITCH DS 4	20	0.20	2.340	2.298	1.494	1.453
DMH-48	DMH-47	U'DITCH DS 4	20	0.20	2.298	2.294	1.453	1.413
DMH-47	DMH-46	U'DITCH DS 4	20	0.20	2.294	2.291	1.413	1.375
DMH-46	DMH-45	MSW-III	8.9	0.20	2.291	2.316	1.375	1.357
DMH-45	DMH-44	U'DITCH DS 4	17	0.20	2.316	2.310	1.357	1.323
DMH-44	DMH-43	U'DITCH DS 4	20	0.20	2.310	2.439	1.323	1.282
DMH-43	DMH-42	U'DITCH DS 4	13.8	0.20	2.439	2.187	1.282	1.254
DMH-42	DMH-41	U'DITCH DS 4	26.2	0.20	2.187	2.339	1.254	1.201
DMH-41	DMH-40	U'DITCH DS 4	20	0.20	2.339	2.456	1.201	1.160
DMH-40	DMH-39	RCP ø800 (A)	20	0.20	2.456	2.554	1.160	1.119
DMH-39	DMH-38	RCP ø800 (A)	20	0.20	2.554	2.608	1.119	1.078
DMH-38	DMH-37	RCP ø800 (A)	17	0.20	2.608	2.632	1.078	1.043
DMH-37	DMH-36	RCP ø800 (A)	8.4	0.20	2.632	2.644	1.043	1.026
DMH-36	DMH-35	RCP ø800 (A)	15.2	0.20	2.644	2.666	1.026	0.995
DMH-35	EXISTING	RCP ø800 (A)	14	0.20	2.666	–	0.995	–

NO. MANHOLE	TYPE OF MANHOLE	DIMENSION OF MANHOLE WIDTH	LENGTH	HEIGHT
DMH-03	TYPE I	1250	1370	744
DMH-02	TYPE I	1250	1370	922
DMH-01	TYPE I	1250	1370	1142
DMH-01B	TYPE I	1250	1370	1330
DMH-01A	TYPE VI	1250	1370	1464
DMH-04	TYPE I	1250	1370	743
DMH-05	TYPE I	1250	1370	799
DMH-06	TYPE VI	1588	1340	1660
DMH-07	TYPE III	1588	1370	1641
DMH-08	TYPE III	1588	1370	1729
DMH-09	TYPE III	1588	1370	1840
DMH-10	TYPE III	1588	1370	1768
DMH-11	TYPE III	1588	1370	1845
DMH-12	TYPE III	1588	1370	1923
DMH-13	TYPE III	1588	1370	2046
DMH-14	TYPE III	1588	1370	2211
DMH-15	TYPE IV	1588	1340	2486
DMH-16	TYPE III	1588	1370	2611
DMH-17	TYPE III	1588	1370	2985
DMH-26A	TYPE I	1250	1370	807
DMH-26	TYPE I	1250	1370	807
DMH-25	TYPE I	1250	1370	856
DMH-24	TYPE I	1250	1370	943
DMH-23	TYPE I	1250	1370	1033
DMH-22	TYPE V	1250	1340	1226
DMH-21	TYPE I	1250	1370	1721
DMH-20	TYPE I	1250	1370	2390
DMH-27A	TYPE I	1250	1370	659
DMH-27	TYPE I	1250	1370	659
DMH-28	TYPE I	1250	1370	739
DMH-29	TYPE I	1250	1370	762
DMH-30	TYPE V	1250	1340	741
DMH-31	TYPE I	1250	1370	774
DMH-32	TYPE I	1250	1370	775
DMH-33	TYPE I	1250	1370	807
DMH-50	TYPE I	1250	1370	964
DMH-49	TYPE I	1250	1370	996
DMH-48	TYPE I	1250	1370	995
DMH-47	TYPE I	1250	1370	1031
DMH-46	TYPE I	1250	1370	1066
DMH-45	TYPE I	1250	1370	1109
DMH-44	TYPE I	1250	1370	1137
DMH-43	TYPE I	1250	1370	1307
DMH-42	TYPE V	1250	1370	1286
DMH-41	TYPE I	1250	1370	1288
DMH-40	TYPE VI	1588	1370	1446
DMH-39	TYPE III	1588	1370	1585
DMH-38	TYPE III	1588	1370	1680
DMH-37	TYPE III	1588	1370	1739
DMH-36	TYPE III	1588	1370	1768
DMH-35	TYPE III	1588	1370	1821

DRAINAGE SLOPE LEFT

FROM MH	TO MH	TYPE OF U'DITCH/PIPE	LENGTH (m)	SLOPE (%)	FINISHED AT MANHOLE (m) UPSTREAM	FINISHED AT MANHOLE (m) DOWNSTREAM	INVERT ELEV. (m) UPSTREAM	INVERT ELEV. (m) DOWNSTREAM
DRAINAGE SLOPE DMH-59 TO DMH-72								
DMH-59	DMH-60	U'DITCH DS 4	20	0.61	2.614	2.752	1.864	1.741
DMH-60	DMH-61	U'DITCH DS 4	20	0.30	2.652	2.781	1.741	1.680
DMH-61	DMH-62	U'DITCH DS 4	20	0.35	2.681	2.849	1.680	1.610
DMH-62	DMH-63	U'DITCH DS 4	25	0.38	2.749	2.961	1.610	1.517
DMH-63	DMH-64	U'DITCH DS 4	25.8	0.43	2.861	2.993	1.517	1.404
DMH-64	DMH-65	RCP ø800 (A)	29	0.47	2.893	3.028	1.404	1.268
DMH-65	DMH-66	RCP ø800 (A)	20	0.38	2.928	2.948	1.268	1.192
DMH-66	DMH-67	RCP ø800 (A)	20	0.39	2.848	2.856	1.192	1.113
DMH-67	DMH-68	RCP ø800 (A)	20	0.64	2.756	2.618	1.113	0.984
DMH-68	DMH-69	RCP ø800 (A)	20	0.30	2.518	2.456	0.984	0.924
DMH-69	DMH-70	RCP ø800 (A)	20	0.40	2.356	2.424	0.924	0.845
DMH-70	DMH-71	RCP ø800 (A)	20	0.35	2.324	2.572	0.845	0.775
DMH-71	DMH-72	RCP ø800 (A)	17	0.38	2.472	3.191	0.775	0.712
DMH-72	RIVER	RCP ø800 (B)	15	0.38	3.091	–	0.712	–
DRAINAGE SLOPE DHM-81 TO 73								
DMH-81	DMH-80	U'DITCH DS 4	20	0.42	3.456	3.595	2.720	2.636
DMH-80	DMH-79	U'DITCH DS 4	20	0.67	3.495	3.484	2.636	2.501
DMH-79	DMH-78	U'DITCH DS 4	20	0.61	3.384	3.340	2.501	2.381
DMH-78	DMH-77	U'DITCH DS 4	20	0.76	3.240	3.279	2.381	2.228
DMH-77	DMH-76	U'DITCH DS 4	20	0.71	3.179	3.155	2.228	2.086
DMH-76	DMH-75	U'DITCH DS 4	20	0.59	3.055	2.981	2.086	1.968
DMH-75	DMH-74	U'DITCH DS 4	20	0.65	2.881	3.000	1.968	1.838
DMH-74	DMH-73	U'DITCH DS 4	16	0.87	2.900	3.182	1.838	1.700
DMH-73	RIVER	RCP ø800 (B)	12.4	0.87	3.082	–	1.700	–
DRAINAGE SLOPE DHM-81 TO DMH-87								
DMH-81	DMH-82	U'DITCH DS 4	20	0.59	3.456	3.611	2.720	2.601
DMH-82	DMH-83	U'DITCH DS 4	20	0.65	3.511	3.577	2.601	2.472
DMH-83	DMH-84	U'DITCH DS 4	20	0.54	3.477	3.470	2.472	2.365
DMH-84	DMH-85	U'DITCH DS 4	20	0.68	3.370	3.294	2.365	2.229
DMH-85	DMH-86	U'DITCH DS 4	20	0.57	3.194	3.158	2.229	2.114
DMH-86	DMH-87	U'DITCH DS 4	20	0.58	3.058	3.055	2.114	1.999
DMH-87	EXISTING	U'DITCH DS 4	16	0.76	2.955	–	1.999	–
DRAINAGE SLOPE DHM-103 TO DMH-89								
DMH-103	DMH-102	U'DITCH DS 4	20	0.36	2.373	2.460	1.860	1.794
DMH-102	DMH-101	U'DITCH DS 4	20	0.35	2.380	2.393	1.794	1.725
DMH-101	DMH-100	U'DITCH DS 4	11.7	0.35	2.293	2.403	1.725	1.684
DMH-100	DMH-99	MSW-III	10	0.21	2.303	2.414	1.684	1.684
DMH-99	DMH-98	U'DITCH DS 4	20	0.53	2.314	2.402	1.684	1.588
DMH-98	DMH-97	U'DITCH DS 4	20	0.16	2.302	2.421	1.588	1.556
DMH-97	DMH-96	U'DITCH DS 4	20	0.28	2.321	2.551	1.556	1.493
DMH-96	DMH-95	U'DITCH DS 4	20	0.41	2.451	2.598	1.493	1.412
DMH-95	DMH-94	U'DITCH DS 4	20	0.27	2.498	2.712	1.412	1.358
DMH-94	DMH-93	U'DITCH DS 4	20	0.39	2.612	2.827	1.358	1.280
DMH-93	DMH-92	RCP ø800 (A)	20	0.40	2.727	2.942	1.280	1.200
DMH-92	DMH-91	RCP ø800 (A)	20	0.27	2.842	3.000	1.200	1.147
DMH-91	DMH-90	RCP ø800 (A)	20	0.07	2.900	2.938	1.147	1.132
DMH-90	DMH-89	RCP ø800 (A)	20	0.60	2.838	2.948	1.132	1.013
DMH-89	EXISTING	RCP ø800 (A)	21	0.60	2.848	–	1.013	–

NO. MANHOLE	TYPE OF MANHOLE	DIMENSION OF MANHOLE WIDTH	LENGTH	HEIGHT
DMH-59	TYPE I	1250	1370	890
DMH-60	TYPE I	1250	1370	1051
DMH-61	TYPE I	1250	1370	1141
DMH-62	TYPE I	1250	1370	1279
DMH-63	TYPE I	1250	1370	1484
DMH-64	TYPE VI	1250	1370	1629
DMH-65	TYPE III	1588	1370	1800
DMH-66	TYPE III	1588	1370	1796
DMH-67	TYPE III	1588	1370	1783
DMH-68	TYPE III	1588	1370	1674
DMH-69	TYPE III	1588	1370	1572
DMH-70	TYPE III	1588	1370	1619
DMH-71	TYPE III	1588	1370	1837
DMH-72	TYPE III	1588	1370	2519
DMH-81	TYPE I	1250	1370	876
DMH-80	TYPE I	1250	1370	999
DMH-79	TYPE I	1250	1370	1023
DMH-78	TYPE I	1250	1370	999
DMH-77	TYPE I	1250	1370	1091
DMH-76	TYPE I	1250	1370	1109
DMH-75	TYPE I	1250	1370	1053
DMH-74	TYPE I	1250	1370	1202
DMH-73	TYPE VI	1588	1370	1522
DMH-82	TYPE I	1250	1370	1050
DMH-83	TYPE I	1250	1370	1135
DMH-84	TYPE I	1250	1370	1145
DMH-85	TYPE I	1250	1370	1105
DMH-86	TYPE I	1250	1370	1084
DMH-87	TYPE I	1250	1370	1096
DMH-103	TYPE I	1250	1370	653
DMH-102	TYPE I	1250	1370	706
DMH-101	TYPE I	1250	1370	708
DMH-100	TYPE I	1250	1370	759
DMH-99	TYPE I	1250	1370	770
DMH-98	TYPE I	1250	1370	854
DMH-97	TYPE I	1250	1370	905
DMH-96	TYPE I	1250	1370	1098
DMH-95	TYPE I	1250	1370	1226
DMH-94	TYPE I	1250	1370	1394
DMH-93	TYPE VI	1588	1370	1587
DMH-92	TYPE III	1588	1370	1782
DMH-91	TYPE III	1588	1370	1893
DMH-90	TYPE III	1588	1370	1846
DMH-89	TYPE III	1588	1370	1975

1 / – DRAINAGE SCHEDULE

SCALE N.T.S

PRINTED: OCT. 19, 2006

JAPAN INTERNATIONAL COOPERATION AGENCY / KATAHIRA & ENGINEERS INTERNATIONAL	DESIGNED BY	CHECKED BY	SUBMITTED BY	REPUBLIC OF INDONESIA MINISTRY OF PUBLIC WORKS DIRECTORATE GENERAL OF HIGHWAYS	PROJECT AND LOCATION :	SCALE :	DRAWING TITLE :	DRAWING NO :
	Name: R. UENO	Name: T. OKUMURA	Name: M. KIUCHI		DETAILED DESIGN STUDY OF NORTH JAVA CORRIDOR FLYOVER PROJECT GEBANG FLYOVER - CONTRACT PACKAGE 2 (NAGREG - GEBANG) WEST JAVA PROVINCE	1 : 1000	DRAINAGE LAYOUT PLAN 1 OF 4	GDG-002
	Sign	Sign	Sign	APPROVED BY: Ir. HERRY VAZA M,Eng.Sc NIP. : 110038400				SHEET NO :
	Date	Date	Date	Sign / Date		FULL SIZE A3		02 / 17

LEGEND

- : DRAINAGE MANHOLES
- : DRAINAGE LINE
- : NEW CULVERT
- : EXISTING DRAINAGE
- RCP : PIPE CULVERT, RCP-ø0.60 (A)-15.0 (DIAMETER, TYPE, LENGTH)
- DS : SIDE DRAIN, DS-2-15.0 (TYPE, LENGTH)

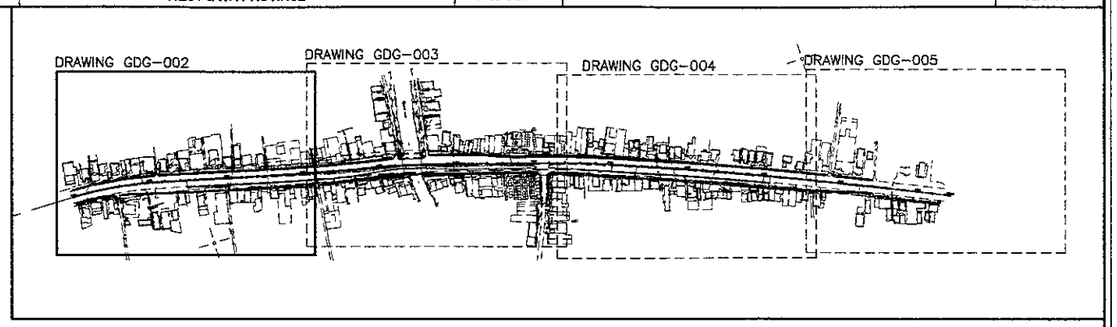

KEY PLAN

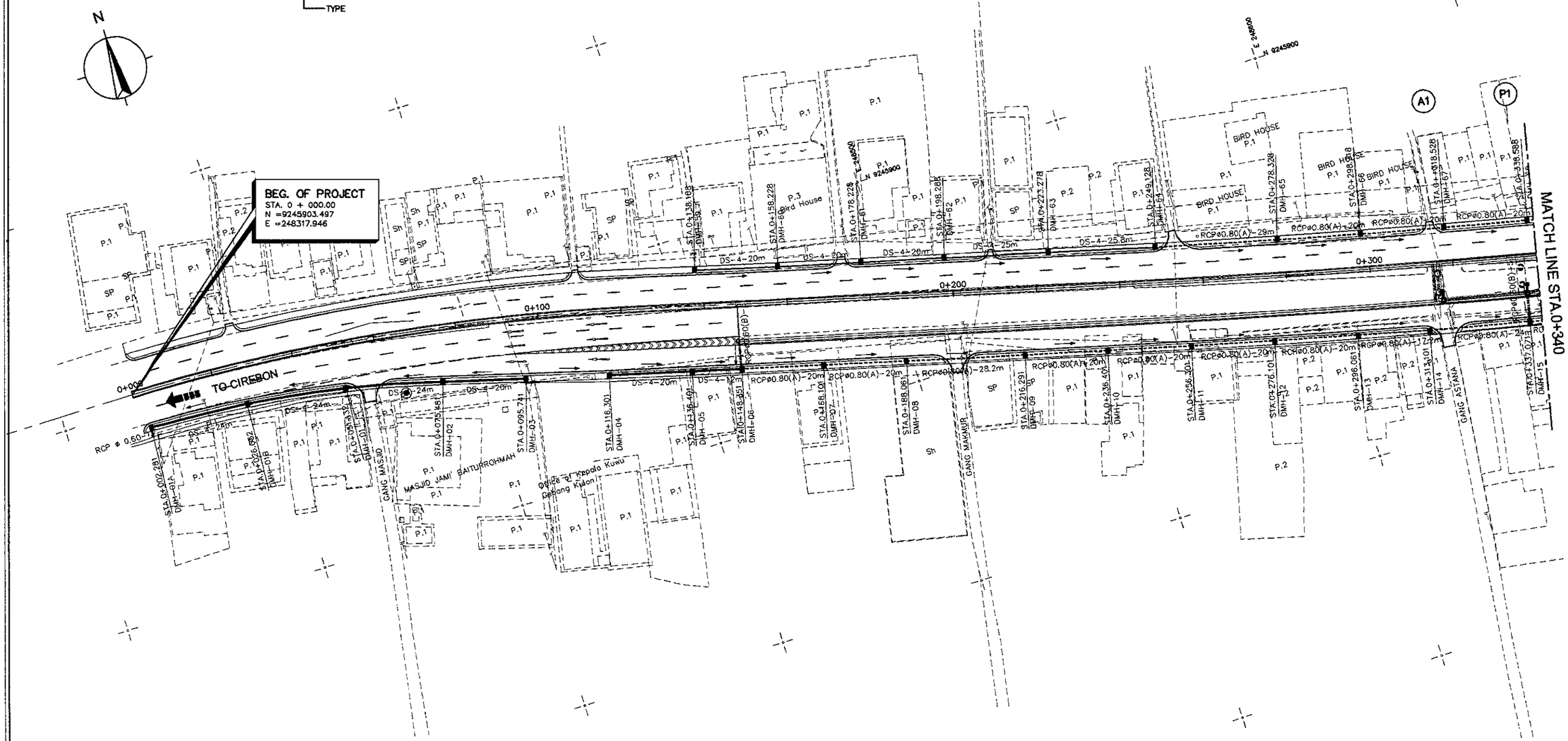

1 DRAINAGE LAYOUT PLAN
SCALE 1:1000

PRINTED: OCT. 19, 2006

JICA JAPAN INTERNATIONAL COOPERATION AGENCY / KEI KATAHIRA & ENGINEERS INTERNATIONAL	DESIGNED BY	CHECKED BY	SUBMITTED BY	REPUBLIC OF INDONESIA MINISTRY OF PUBLIC WORKS DIRECTORATE GENERAL OF HIGHWAYS	PROJECT AND LOCATION :	SCALE :	DRAWING TITLE :	DRAWING NO :
	Name R. UENO	Name T. OKUMURA	Name M. KIUCHI		DETAILED DESIGN STUDY OF NORTH JAVA CORRIDOR FLYOVER PROJECT GEBANG FLYOVER - CONTRACT PACKAGE 2 (NAGREG - GEBANG) WEST JAVA PROVINCE	1 : 1000	DRAINAGE LAYOUT PLAN 2 OF 4	GDG-003
	Sign	Sign	Sign	APPROVED BY Ir. HERRY VAZA M,Eng.Sc NIP. : 110038400 Sign		FULL SIZE A3		SHEET NO : 03 / 17
	Date	Date	Date	Date				

LEGEND

- : DRAINAGE MANHOLES
- : DRAINAGE LINE
- : NEW CULVERT
- : EXISTING DRAINAGE
- RCP : PIPE CULVERT, RCP-ø0.60 (A)-15.0 (DIAMETER, TYPE, LENGTH)
- DS : SIDE DRAIN, DS-2-15.0 (TYPE, LENGTH)

KEY PLAN

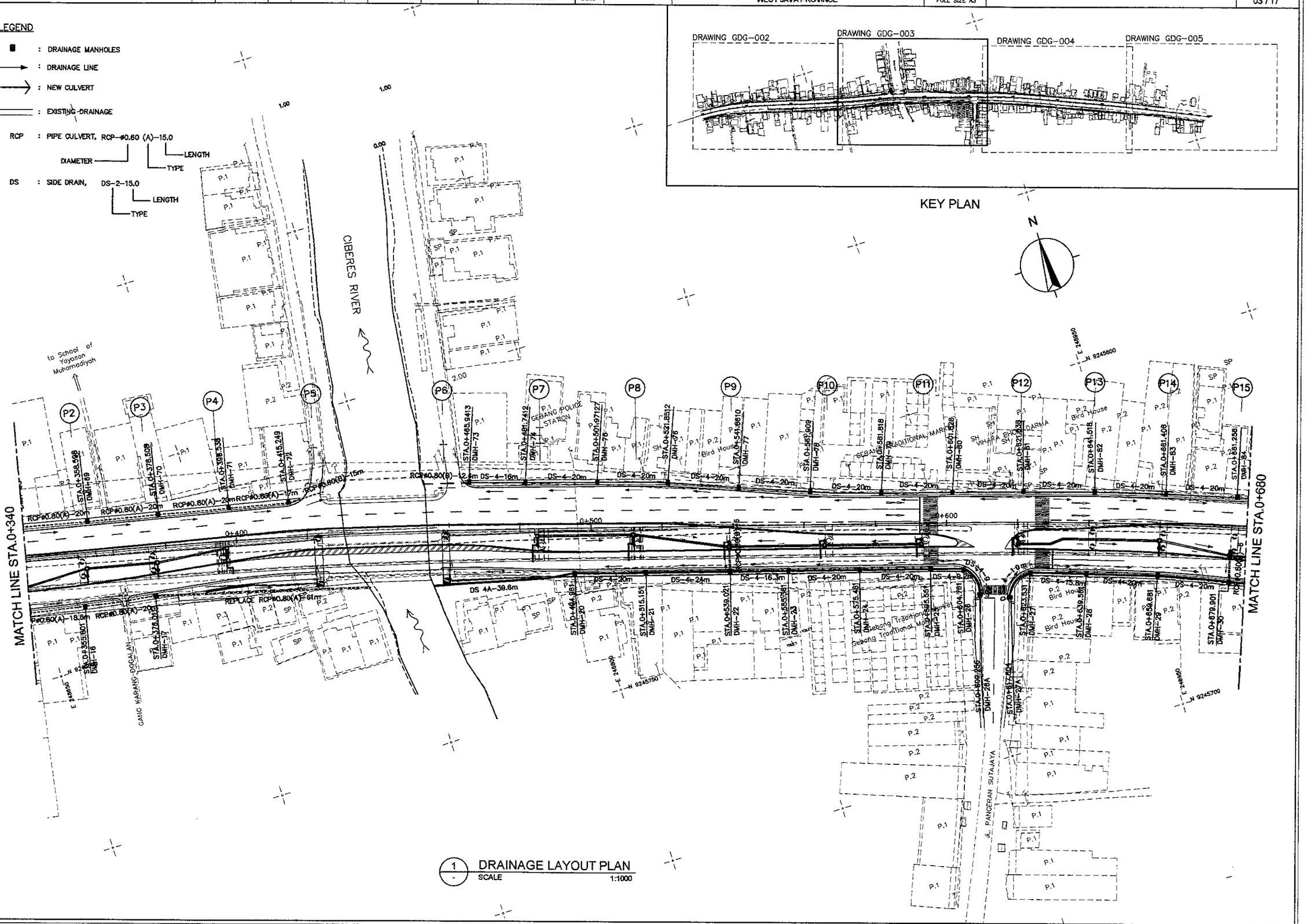

1 DRAINAGE LAYOUT PLAN
SCALE 1:1000

PRINTED: OCT. 19, 2006

JICA JAPAN INTERNATIONAL COOPERATION AGENCY / KEI KATAHIRA & ENGINEERS INTERNATIONAL	DESIGNED BY	CHECKED BY	SUBMITTED BY	REPUBLIC OF INDONESIA MINISTRY OF PUBLIC WORKS DIRECTORATE GENERAL OF HIGHWAYS	PROJECT AND LOCATION :	SCALE :	DRAWING TITLE :	DRAWING NO :
	Name: R. UENO	Name: T. OKUMURA	Name: M. KIUCHI		DETAILED DESIGN STUDY OF NORTH JAVA CORRIDOR FLYOVER PROJECT GEBANG FLYOVER - CONTRACT PACKAGE 2 (NAGREG - GEBANG) WEST JAVA PROVINCE	1 : 1000	DRAINAGE LAYOUT PLAN 3 OF 4	GDG-004
	Sign	Sign	Sign	APPROVED BY: Ir. HERRY VAZA M,Eng.Sc NIP. : 110038400		FULL SIZE A3		SHEET NO : 04 / 17
	Date	Date	Date	Sign / Date				

LEGEND

- : DRAINAGE MANHOLES
- : DRAINAGE LINE
- : NEW CULVERT
- : EXISTING DRAINAGE

RCP : PIPE CULVERT, RCP-ø0.60 (A)-15.0 (DIAMETER, TYPE, LENGTH)

DS : SIDE DRAIN, DS-2-15.0 (TYPE, LENGTH)

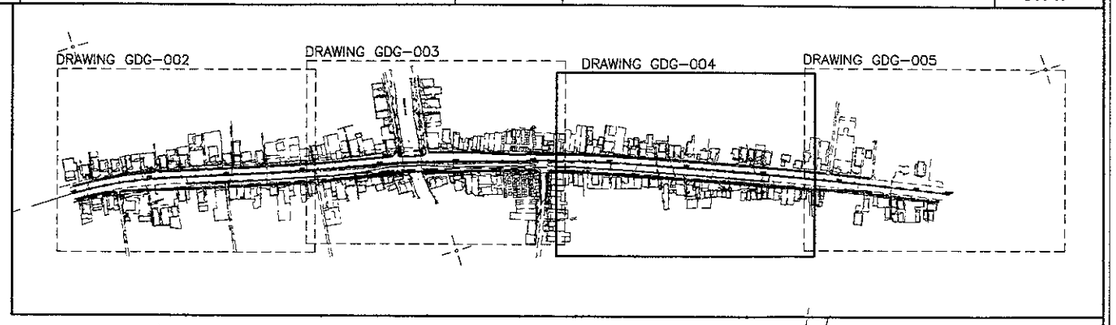

KEY PLAN

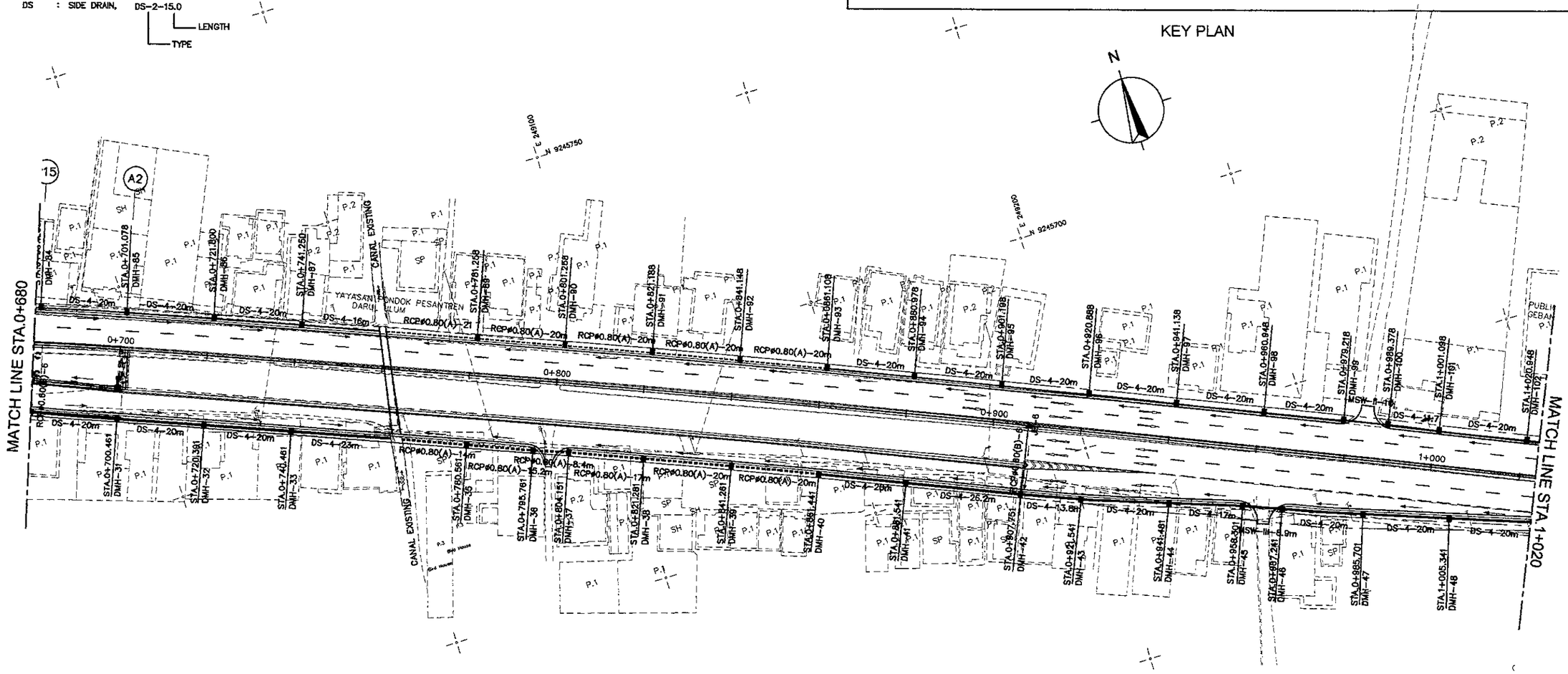

1 DRAINAGE LAYOUT PLAN
SCALE 1:1000

PRINTED: OCT. 19, 2006

JAPAN INTERNATIONAL COOPERATION AGENCY KATAHIRA & ENGINEERS INTERNATIONAL	DESIGNED BY		CHECKED BY		SUBMITTED BY		REPUBLIC OF INDONESIA MINISTRY OF PUBLIC WORKS DIRECTORATE GENERAL OF HIGHWAYS			PROJECT AND LOCATION :	SCALE :	DRAWING TITLE :	DRAWING NO :
	Name	R. UENO	Name	T. OKUMURA	Name	M. KIUCHI				DETAILED DESIGN STUDY OF NORTH JAVA CORRIDOR FLYOVER PROJECT GEBANG FLYOVER - CONTRACT PACKAGE 2 (NAGREG - GEBANG) WEST JAVA PROVINCE	1 : 1000	DRAINAGE LAYOUT PLAN 4 OF 4	GDG-005
	Sign		Sign		Sign		APPROVED BY	Ir. HERRY VAZA M.Eng.Sc	Sign				SHEET NO :
	Date		Date		Date			NIP. : 110038400	Date		FULL SIZE A3		05 / 17

LEGEND

- ■ : DRAINAGE MANHOLES
- → : DRAINAGE LINE
- ⟶ : NEW CULVERT
- ═══ : EXISTING DRAINAGE
- RCP : PIPE CULVERT, RCP-ø0.60 (A)-15.0 (DIAMETER, TYPE, LENGTH)
- DS : SIDE DRAIN, DS-2-15.0 (TYPE, LENGTH)

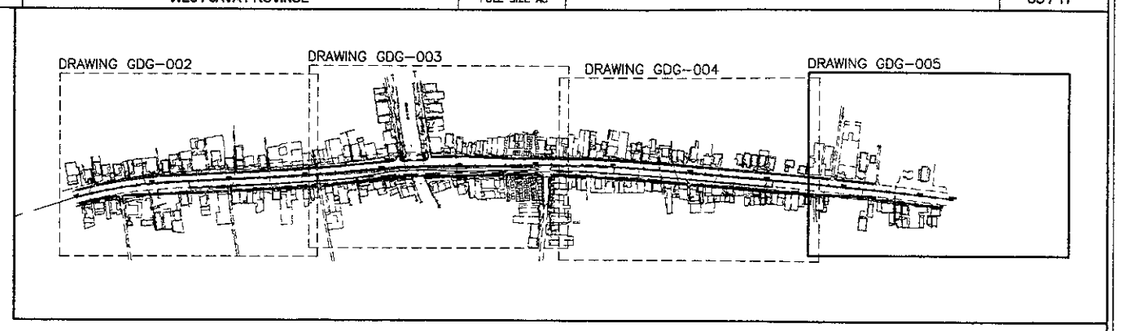

KEY PLAN

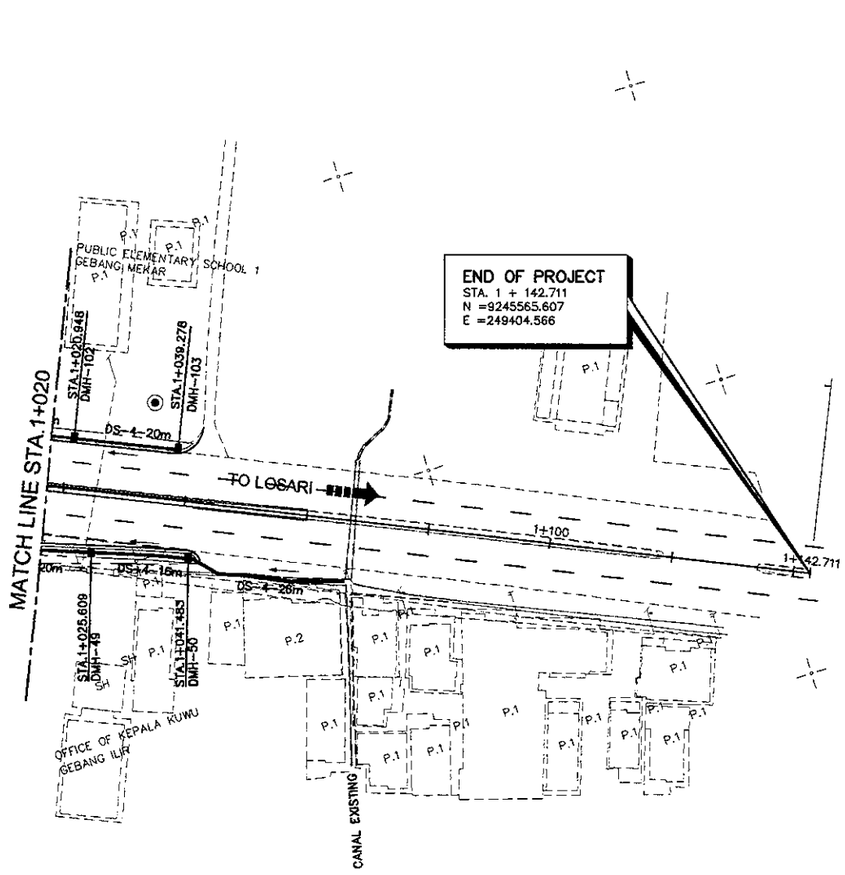

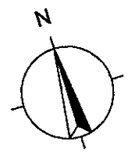

1 - DRAINAGE LAYOUT PLAN
SCALE 1:1000

PRINTED: OCT. 19, 2006

JAPAN INTERNATIONAL COOPERATION AGENCY KATAHIRA & ENGINEERS INTERNATIONAL	DESIGNED BY	CHECKED BY	SUBMITTED BY	REPUBLIC OF INDONESIA MINISTRY OF PUBLIC WORKS DIRECTORATE GENERAL OF HIGHWAYS	PROJECT AND LOCATION :	SCALE :	DRAWING TITLE :	DRAWING NO :
	Name: R. UENO	Name: T. OKUMURA	Name: M. KIUCHI		DETAILED DESIGN STUDY OF NORTH JAVA CORRIDOR FLYOVER PROJECT GEBANG FLYOVER - CONTRACT PACKAGE 2 (NAGREG - GEBANG) WEST JAVA PROVINCE	H=1:2000 V=1:200	DRAINAGE PROFILE, RIGHT SERVICE ROAD 1 OF 2	GDG-006
	Sign	Sign	Sign	APPROVED BY: Ir. HERRY VAZA M,Eng.Sc NIP. : 110038400				SHEET NO :
	Date	Date	Date	Sign / Date		FULL SIZE A3		06 / 17

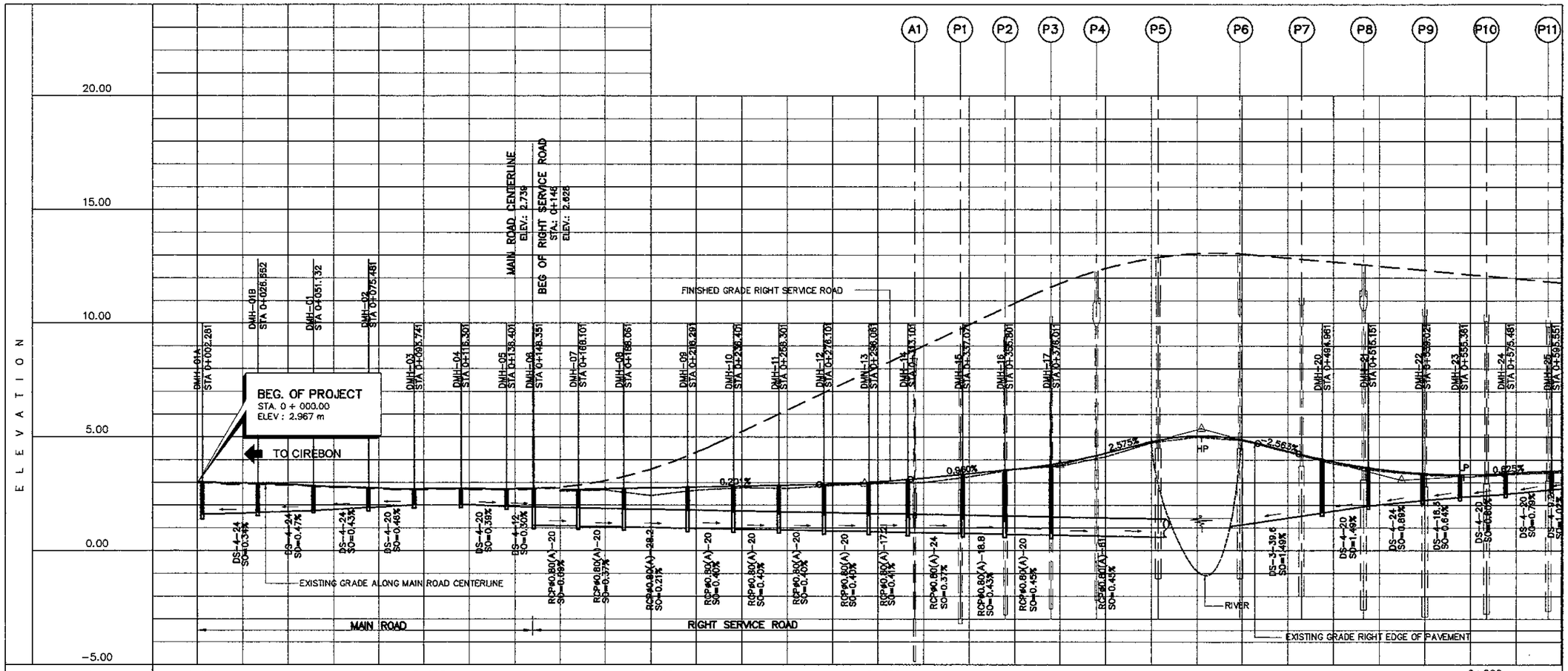

STATION	0+000																										
FINISHED GRADE INVERT LEVEL	1.591	1.670	1.755	1.888	2.014	2.032	1.953	1.120	1.083	1.045	0.992	0.954	0.917	0.880	0.842	0.810	0.785	0.730	0.691	1.670	1.970	2.212	2.347	2.497	2.888
FINISHED GRADE ELEVATION	3.015	2.980	2.857	2.770	2.718	2.735	2.712	2.740	2.684	2.734	2.792	2.832	2.872	2.913	2.998	3.131	3.361	3.541	3.785	4.020	3.651	3.398	3.340	3.400	3.502	3.631
EXISTING GROUND ELEVATION	2.885	2.910	2.807	2.720	2.668	2.685	2.662	2.889	2.635	2.571	2.618	2.747	2.745	2.845	2.938	2.981	3.213	3.507	3.693	3.958	3.588	3.347	3.273	3.350	3.431	3.502

1 / - DRAINAGE PROFILE, RIGHT SERVICE ROAD (1 OF 2)
SCALE H:1:2000 V:1:200

PRINTED: OCT. 19, 2006

JAPAN INTERNATIONAL COOPERATION AGENCY KATAHIRA & ENGINEERS INTERNATIONAL	DESIGNED BY	CHECKED BY	SUBMITTED BY	REPUBLIC OF INDONESIA MINISTRY OF PUBLIC WORKS DIRECTORATE GENERAL OF HIGHWAYS	PROJECT AND LOCATION :	SCALE :	DRAWING TITLE :	DRAWING NO :
	Name R. UENO	Name T. OKUMURA	Name M. KIUCHI		DETAILED DESIGN STUDY OF NORTH JAVA CORRIDOR FLYOVER PROJECT GEBANG FLYOVER - CONTRACT PACKAGE 2 (NAGREG - GEBANG) WEST JAVA PROVINCE	H=1:2000 V=1:200	DRAINAGE PROFILE, RIGHT SERVICE ROAD 2 OF 2	GDG-007
	Sign	Sign	Sign	APPROVED BY ir. HERRY VAZA M,Eng.Sc				SHEET NO :
	Date	Date	Date	NIP. : 110038400 Sign / Date		FULL SIZE A3		07 / 17

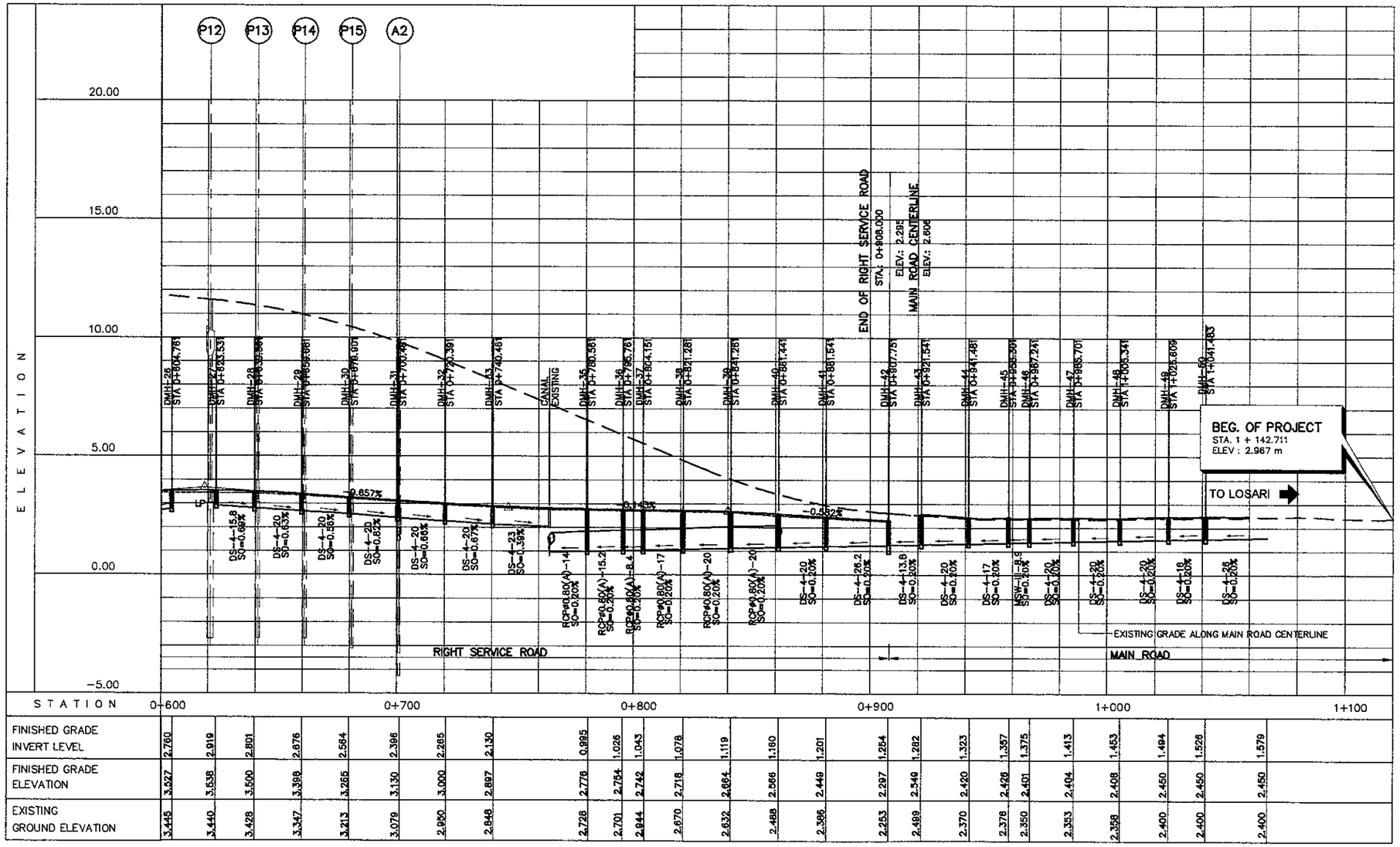

1 DRAINAGE PROFILE, RIGHT SERVICE ROAD (2 OF 2)
SCALE H:1:2000 V:1:200

PRINTED: OCT. 19, 2006

JAPAN INTERNATIONAL COOPERATION AGENCY / KATAHIRA & ENGINEERS INTERNATIONAL	DESIGNED BY	CHECKED BY	SUBMITTED BY	REPUBLIC OF INDONESIA MINISTRY OF PUBLIC WORKS DIRECTORATE GENERAL OF HIGHWAYS	PROJECT AND LOCATION :	SCALE :	DRAWING TITLE :	DRAWING NO :
	Name: R. UENO	Name: T. OKUMURA	Name: M. KIUCHI		DETAILED DESIGN STUDY OF NORTH JAVA CORRIDOR FLYOVER PROJECT GEBANG FLYOVER - CONTRACT PACKAGE 2 (NAGREG - GEBANG) WEST JAVA PROVINCE	H=1:2000 V=1:200	DRAINAGE PROFILE, LEFT THRU ROAD 1 OF 2	GDG-008
	Sign	Sign	Sign	APPROVED BY: Ir. HERRY VAZA M,Eng.Sc NIP. : 110038400				SHEET NO : 08 / 17
	Date	Date	Date	Sign / Date		FULL SIZE A3		

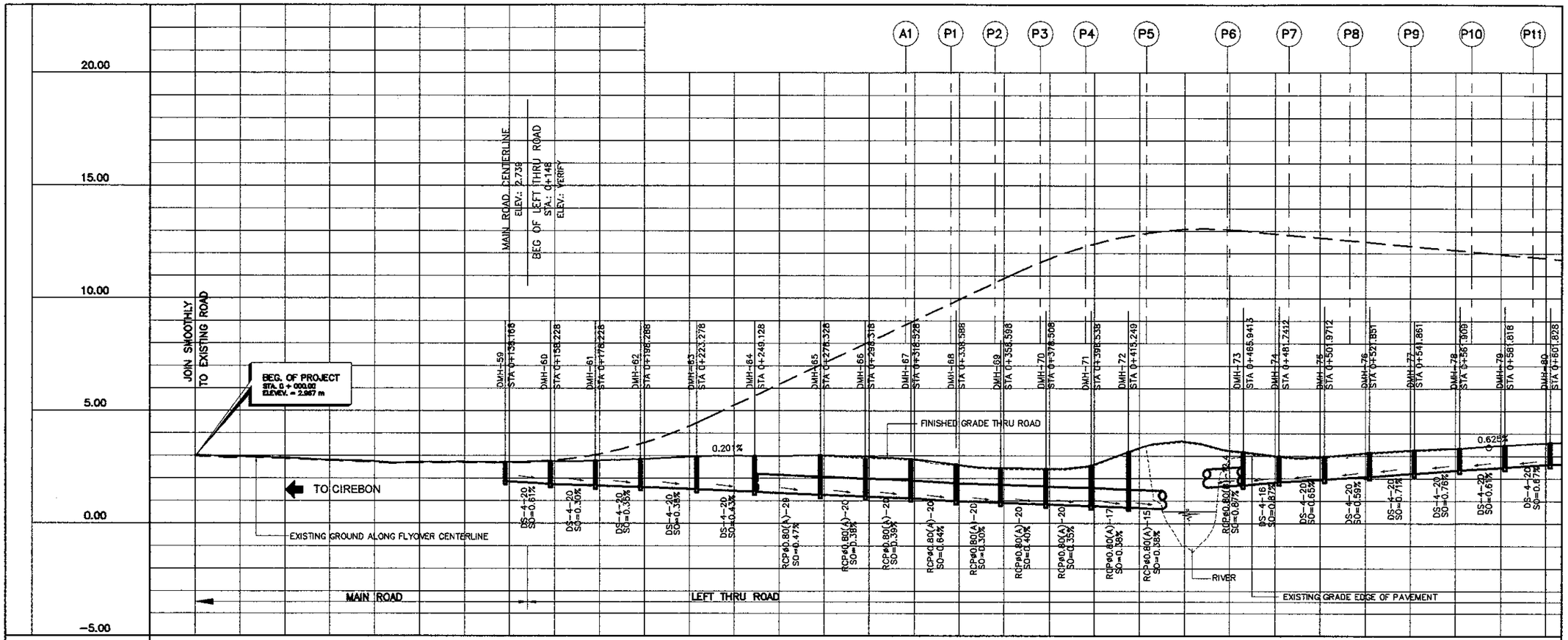

STATION	0+000																											
FINISHED GRADE INVERT LEVEL	2.300	2.241	2.150	2.090	2.000	1.933	1.864	1.741	1.680	1.610	1.517	1.404	1.268	1.192	1.113	0.984	0.924	0.845	0.775	0.712	1.700	1.838	1.968	2.086	2.228	2.381	2.501	2.636
FINISHED GRADE ELEVATION	2.961	2.918	2.812	2.758	2.719	2.742	2.714	2.752	2.781	2.849	2.961	2.993	3.028	2.948	2.856	2.618	2.456	2.424	2.572	3.191	3.182	3.000	2.981	3.155	3.279	3.340	3.484	3.595
EXISTING GROUND ELEVATION	2.910	2.868	2.760	2.710	2.673	2.690	2.660	2.752	2.740	2.799	2.911	2.943	2.978	2.876	2.806	2.568	2.406	2.374	2.522	3.141	3.129	2.941	2.931	3.105	3.229	3.305	3.434	3.545

1 / - DRAINAGE PROFILE, LEFT THRU ROAD (1 OF 2)
SCALE H:1:2000 V :1:200

PRINTED: OCT. 19, 2006

JICA / JAPAN INTERNATIONAL COOPERATION AGENCY	DESIGNED BY	CHECKED BY	SUBMITTED BY	REPUBLIC OF INDONESIA MINISTRY OF PUBLIC WORKS DIRECTORATE GENERAL OF HIGHWAYS	PROJECT AND LOCATION :	SCALE :	DRAWING TITLE :	DRAWING NO :
KEI KATAHIRA & ENGINEERS INTERNATIONAL	Name: R. UENO	Name: T. OKUMURA	Name: M. KIUCHI	APPROVED BY: Ir. HERRY VAZA M,Eng.Sc NIP. : 110038400	DETAILED DESIGN STUDY OF NORTH JAVA CORRIDOR FLYOVER PROJECT GEBANG FLYOVER - CONTRACT PACKAGE 2 (NAGREG - GEBANG) WEST JAVA PROVINCE	H=1:2000 V=1:200 FULL SIZE A3	DRAINAGE PROFILE, LEFT THRU ROAD 2 OF 2	GDG-009 SHEET NO : 09 / 17
	Sign	Sign	Sign	Sign				
	Date	Date	Date	Date				

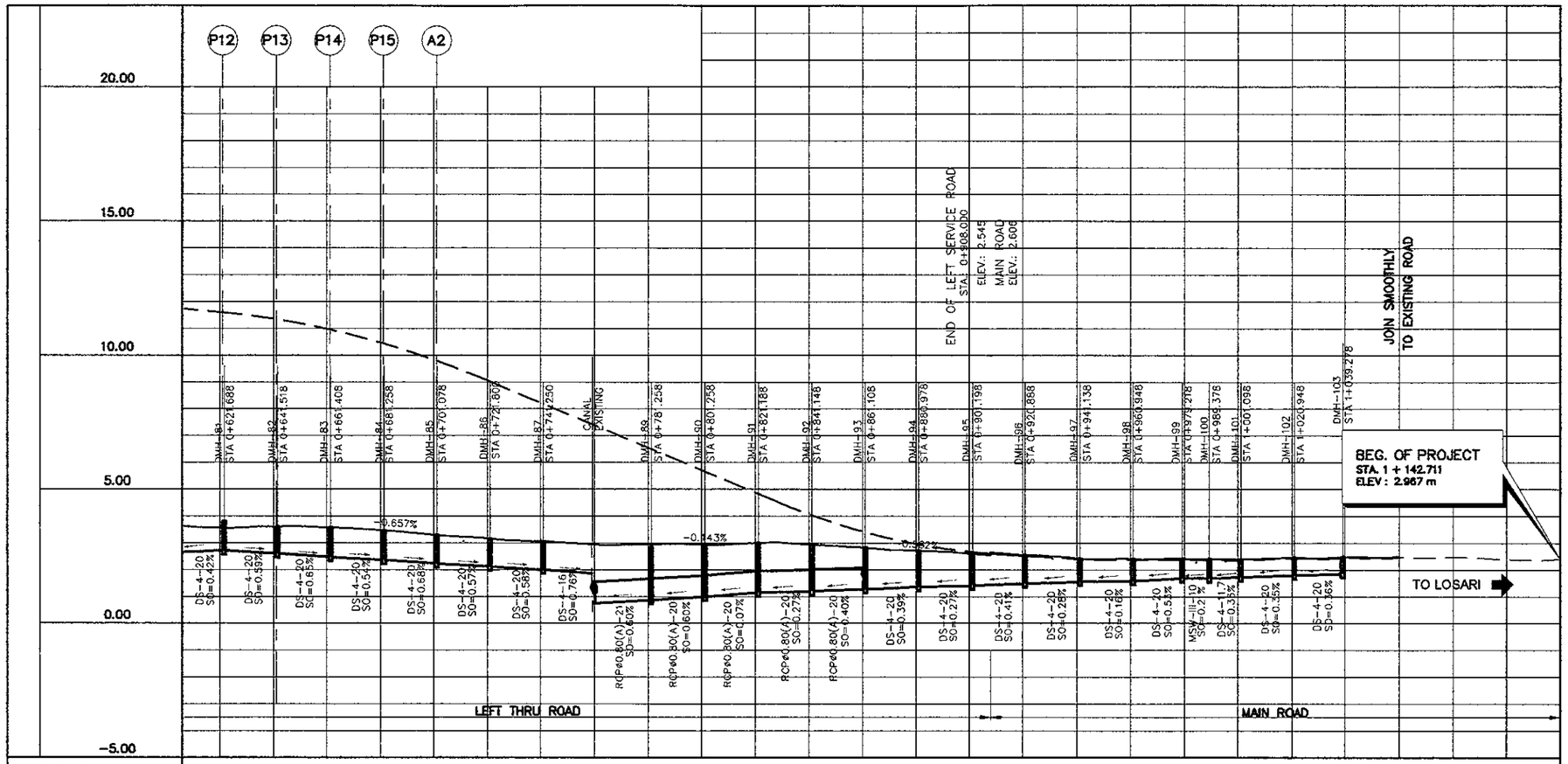

STATION	0+700									0+800							0+900							1+000			1+100
FINISHED GRADE INVERT LEVEL	2.720	2.601	2.472	2.365	2.229	2.114	1.999	1.877	1.013	1.132	1.147	1.200	1.280	1.358	1.412	1.493	1.556	1.588	1.684	1.684	1.725	1.794	1.860				
FINISHED GRADE ELEVATION	3.556	3.611	3.577	3.470	3.294	3.158	3.055	2.954	2.948	2.938	3.000	2.942	2.827	2.712	2.598	2.551	2.421	2.402	2.414	2.403	2.393	2.460	2.473				
EXISTING GROUND ELEVATION	3.503	3.561	3.526	3.420	3.244	3.100	3.005	2.901	2.901	2.888	2.952	2.884	2.777	2.662	2.554	2.495	2.370	2.352	2.360	2.353	2.340	2.410	2.427				

1 / - DRAINAGE PROFILE, LEFT THRU ROAD (2 OF 2)

SCALE H:1:2000 V: 1:200

PRINTED: OCT. 19, 2006

JAPAN INTERNATIONAL COOPERATION AGENCY / KATAHIRA & ENGINEERS INTERNATIONAL	DESIGNED BY	CHECKED BY	SUBMITTED BY	REPUBLIC OF INDONESIA MINISTRY OF PUBLIC WORKS DIRECTORATE GENERAL OF HIGHWAYS	PROJECT AND LOCATION :	SCALE :	DRAWING TITLE :	DRAWING NO :
	Name: R. UENO	Name: T. OKUMURA	Name: M. KIUCHI		DETAILED DESIGN STUDY OF NORTH JAVA CORRIDOR FLYOVER PROJECT GEBANG FLYOVER - CONTRACT PACKAGE 2 (NAGREG - GEBANG) WEST JAVA PROVINCE	1 : 20	STANDARD REINFORCEMENT CONCRETE PIPE CULVERT	GDG-010
	Sign	Sign	Sign	APPROVED BY: Ir. HERRY VAZA M,Eng.Sc NIP. : 110038400 — Sign				SHEET NO :
	Date	Date	Date	Date		FULL SIZE A3		10 / 17

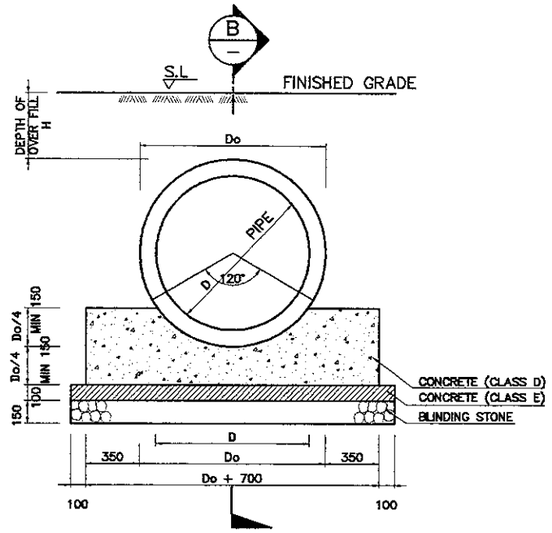

1B SECTION A-A
SCALE 1:10

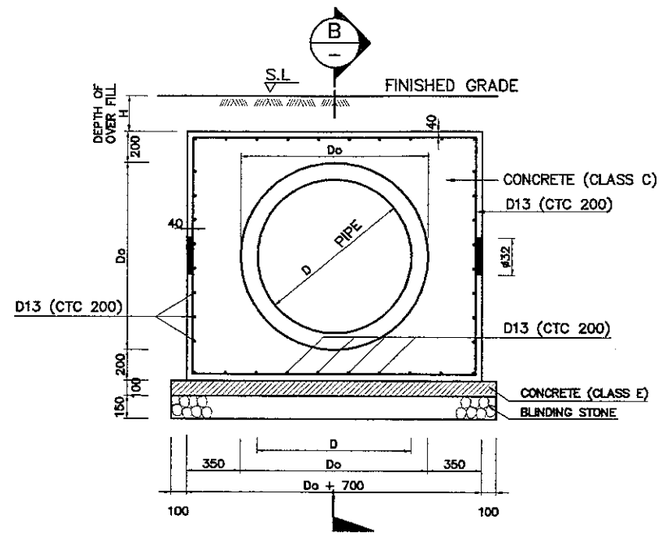

2B SECTION A-A
SCALE 1:10

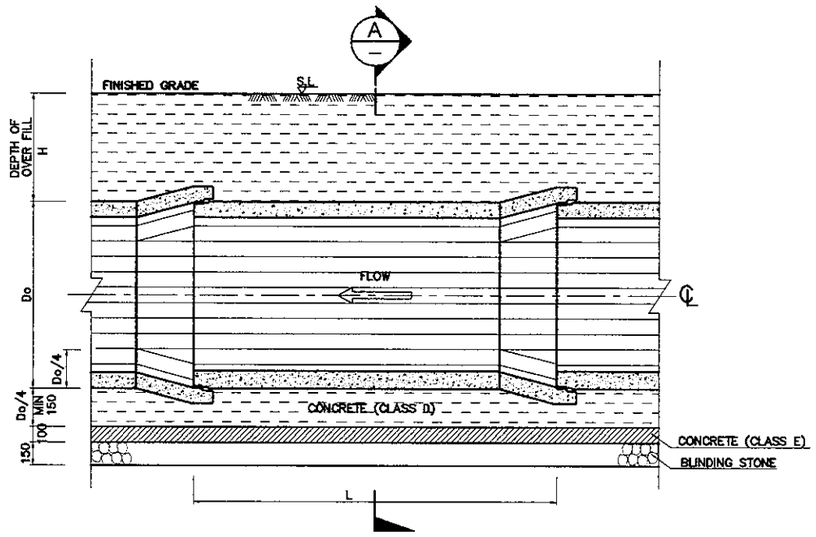

1A SECTION B-B
SCALE 1:10

1 FOUNDATION (RCP TYPE - A)
SCALE 1:10

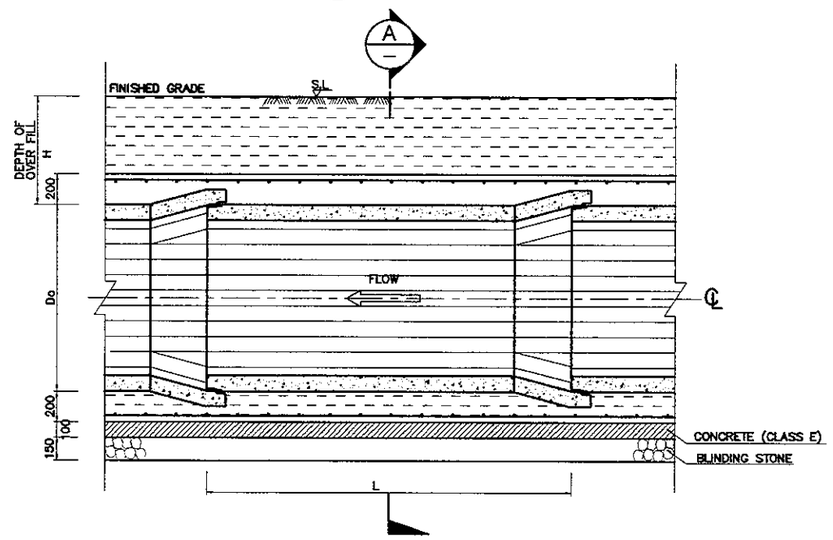

2A SECTION B-B
SCALE 1:10

2 FOUNDATION (RCP TYPE - B)
SCALE 1:10

PIPE DETAILS

DIA D	WALL THICKNESS T	Do	LENGTH L	WEIGHT W	RUBBER RING THICKNESS	REQUIRED STRENGTH	
						CRACKING	BREAKING
mm	mm	mm	mm	kg	mm	KN/m	KN/m
400	55	510	1250	281	12	35.19	58.65
600	70	740	1250/2500	519/965	12	43.07	73.00
800	84	988	2500	1690	15.5	58.40	102.50
1000	108	1216	2500	2638	15.5	75.00	138.00
1200	130	1460	2500	3805	18.5	80.00	160.00
1300	140	1580	2500	4444	18.5	94.20	171.25
1500	160	1820	2500	5858	20	102.20	175.00

DEPTH OF OVER FILL : H

DIMENSION : mm		
D	TYPE - A	TYPE - B
400	500 < H < 3000	300 < H ≤ 500 OR 3000 < H
600	500 < H < 3000	300 < H ≤ 500 OR 3000 < H
800	500 < H < 3000	300 < H ≤ 500 OR 3000 < H
1000	500 < H < 3000	300 < H ≤ 500 OR 3000 < H
1200	600 < H < 3000	300 < H ≤ 600 OR 3000 < H
1300	600 < H < 3000	300 < H ≤ 600 OR 3000 < H
1500	600 < H < 3000	300 < H ≤ 600 OR 3000 < H

NOTES :

1. ALL DIMENSIONS ARE IN MILLIMETERS UNLESS OTHERWISE SHOWN.
2. TYPE OF FOUNDATION IS SHOWN ON THE DRAWING.
3. THE FOUNDATIONS OF TRANSVERSE PIPE CULVERTS SHALL BE TYPE – B IRRESPECTIVE OF PIPE DEPTH.
4. THE CRACKING LOAD MEANS THE LOAD AT WHICH A 0.05 mm WIDE CRACK DEVELOPES ON THE PIPE.
5. BREAKING LOAD MEANS THE MAXIMUM LOAD INDICATED BY THE TESTING MACHINE.
6. THE LOAD P DIVIDED BY THE EFFECTIVE LENGTH L OF PIPE IS GIVEN IN TERMS OF STRENGTH FOR EXTERNAL LOAD.

JICA JAPAN INTERNATIONAL COOPERATION AGENCY / KEI KATAHIRA & ENGINEERS INTERNATIONAL	DESIGNED BY	CHECKED BY	SUBMITTED BY	REPUBLIC OF INDONESIA MINISTRY OF PUBLIC WORKS DIRECTORATE GENERAL OF HIGHWAYS	PROJECT AND LOCATION :	SCALE :	DRAWING TITLE :	DRAWING NO :
	Name: R. UENO	Name: T. OKUMURA	Name: M. KIUCHI		DETAILED DESIGN STUDY OF NORTH JAVA CORRIDOR FLYOVER PROJECT GEBANG FLYOVER - CONTRACT PACKAGE 2 (NAGREG - GEBANG) WEST JAVA PROVINCE	1 : 40	STANDARD CURB INLET AND MANHOLE (I, II) 1 OF 3	GDG-011
	Sign	Sign	Sign	APPROVED BY: Ir. HERRY VAZA M,Eng.Sc NIP. : 110038400				SHEET NO :
	Date	Date	Date	Sign / Date		FULL SIZE A3		11 / 17

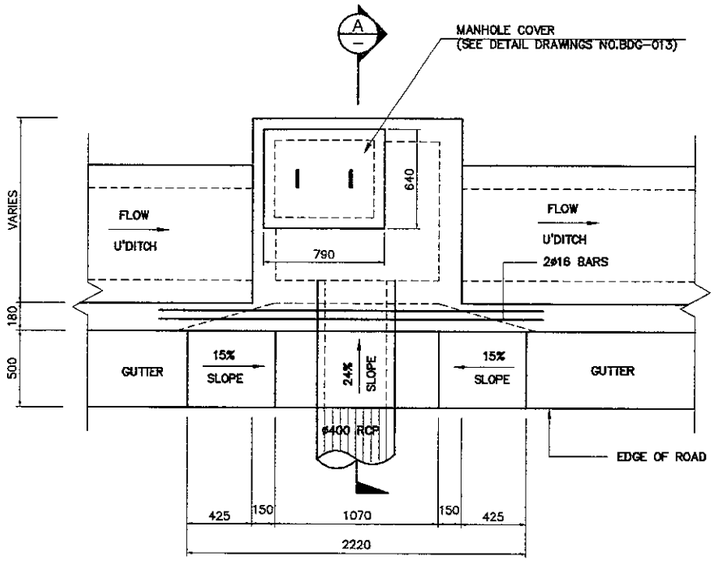

2 PLAN
SCALE 1 : 40

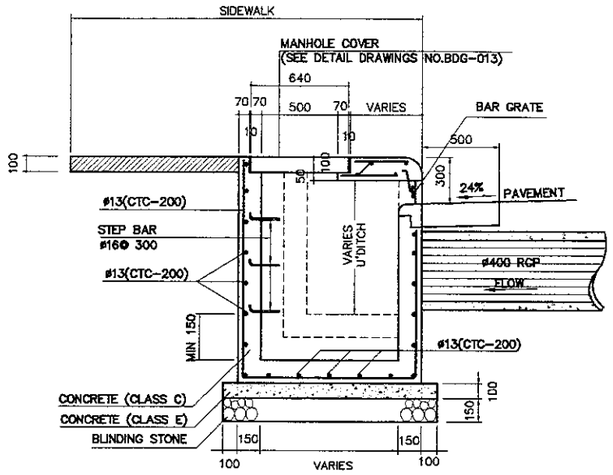

2A SECTION
SCALE 1 : 40

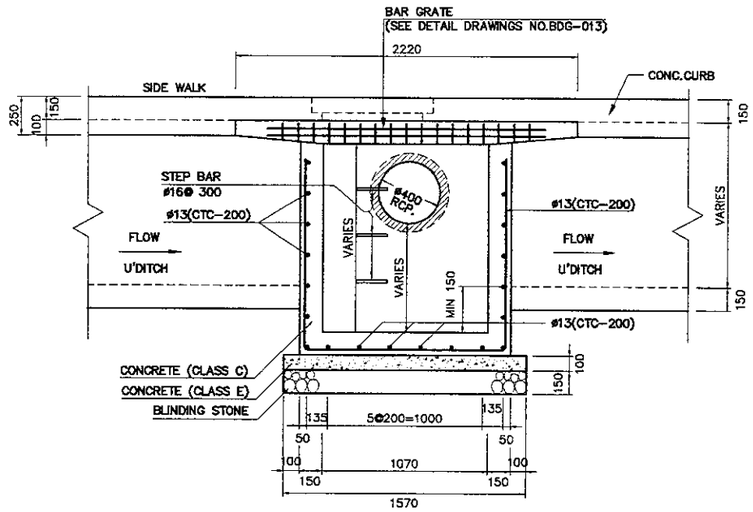

2B FRONT ELEVATION
SCALE 1 : 40

II MANHOLE TYPE - II

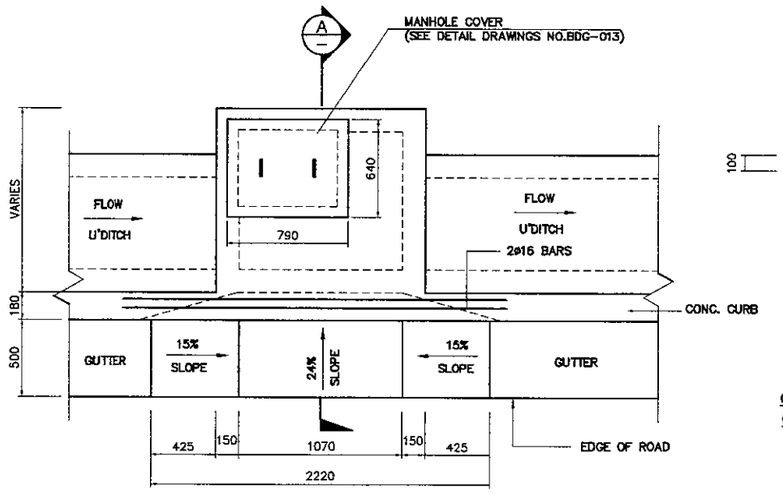

1 PLAN
SCALE 1 : 40

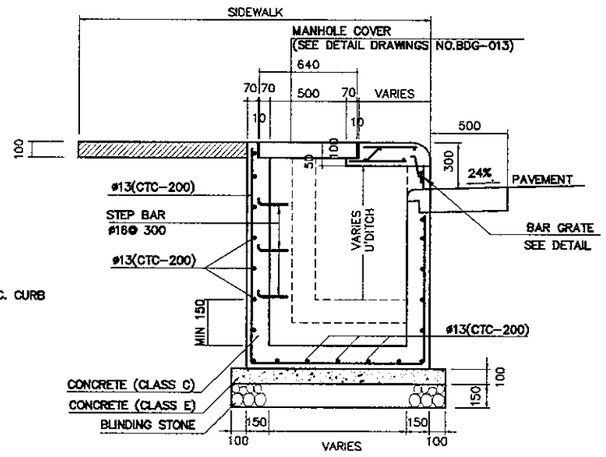

1A SECTION
SCALE 1 : 40

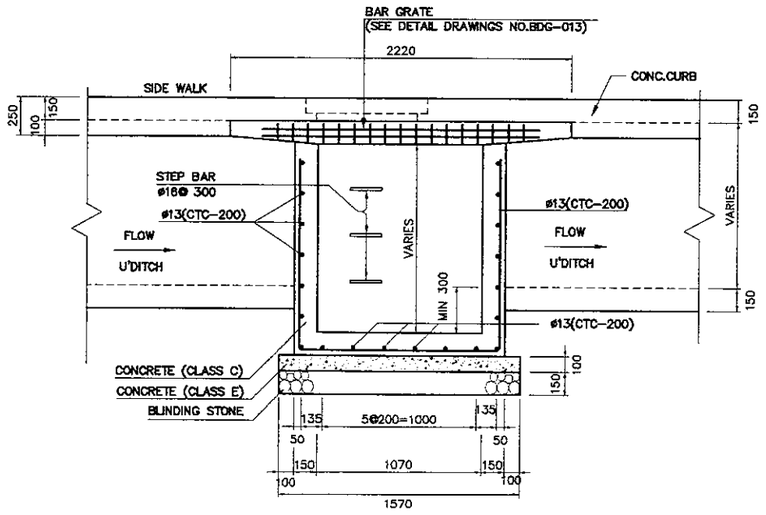

1B FRONT ELEVATION
SCALE 1 : 40

I MANHOLE TYPE - I

PRINTED: OCT. 19, 2006

JAPAN INTERNATIONAL COOPERATION AGENCY KATAHIRA & ENGINEERS INTERNATIONAL	DESIGNED BY	CHECKED BY	SUBMITTED BY	REPUBLIC OF INDONESIA MINISTRY OF PUBLIC WORKS DIRECTORATE GENERAL OF HIGHWAYS	PROJECT AND LOCATION :	SCALE :	DRAWING TITLE :	DRAWING NO :
	Name: R. UENO	Name: T. OKUMURA	Name: M. KIUCHI		DETAILED DESIGN STUDY OF NORTH JAVA CORRIDOR FLYOVER PROJECT GEBANG FLYOVER - CONTRACT PACKAGE 2 (NAGREG - GEBANG) WEST JAVA PROVINCE	1 : 40	STANDARD CURB INLET AND MANHOLE (III, IV) 2 OF 3	GDG-012
	Sign	Sign	Sign	APPROVED BY: Ir. HERRY VAZA M,Eng.Sc NIP. : 110038400				SHEET NO :
	Date	Date	Date	Sign / Date		FULL SIZE A3		12 / 17

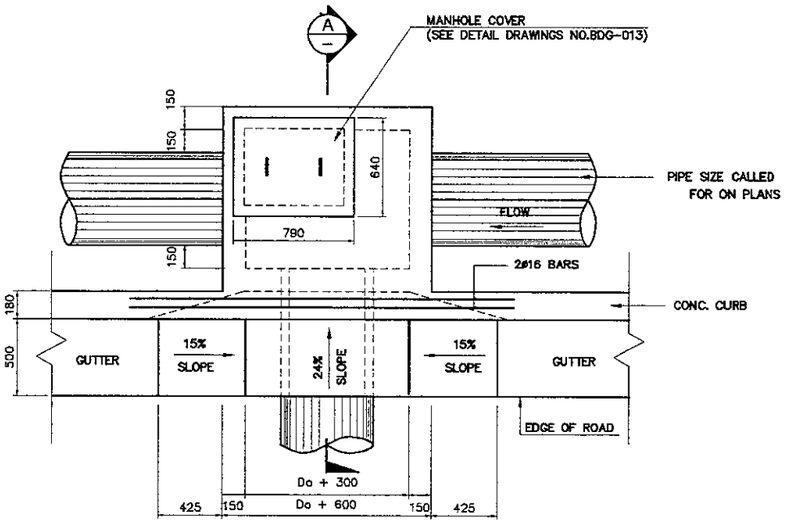

4 PLAN
SCALE 1 : 40

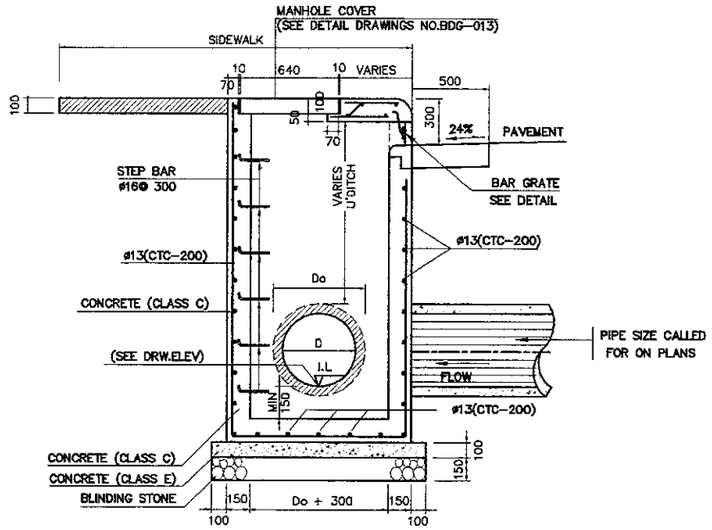

4A SECTION
SCALE 1 : 40

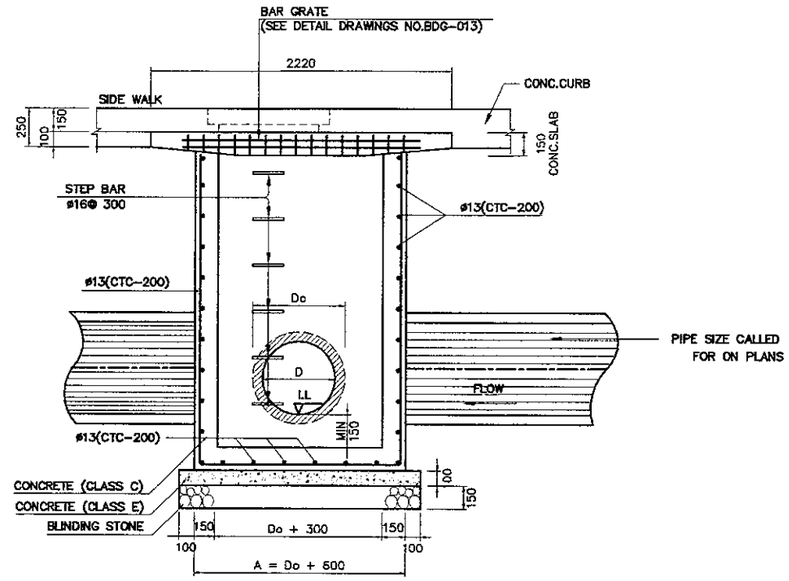

4B FRONT ELEVATION
SCALE 1 : 40

IV MANHOLE TYPE - IV

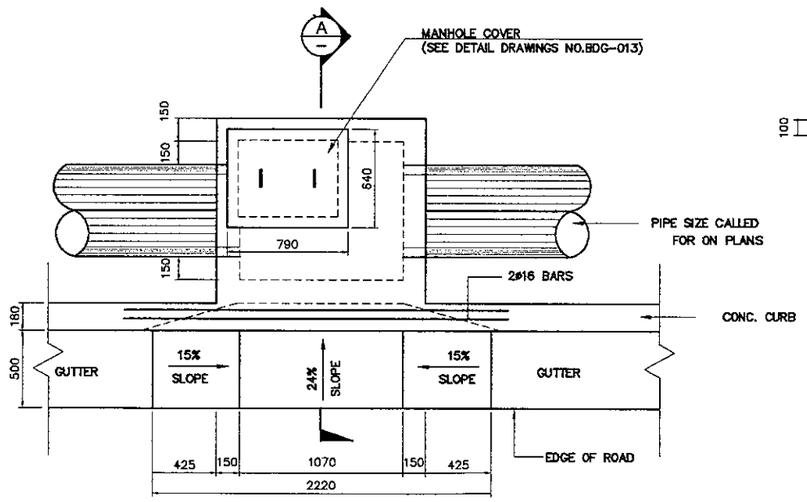

3 PLAN
SCALE 1 : 40

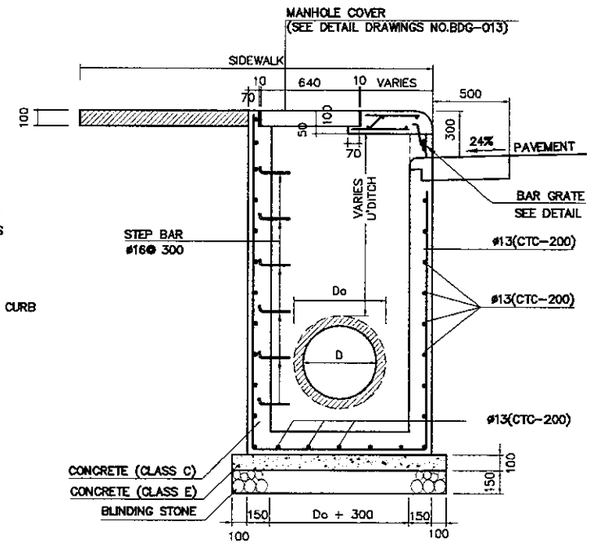

3A SECTION
SCALE 1 : 40

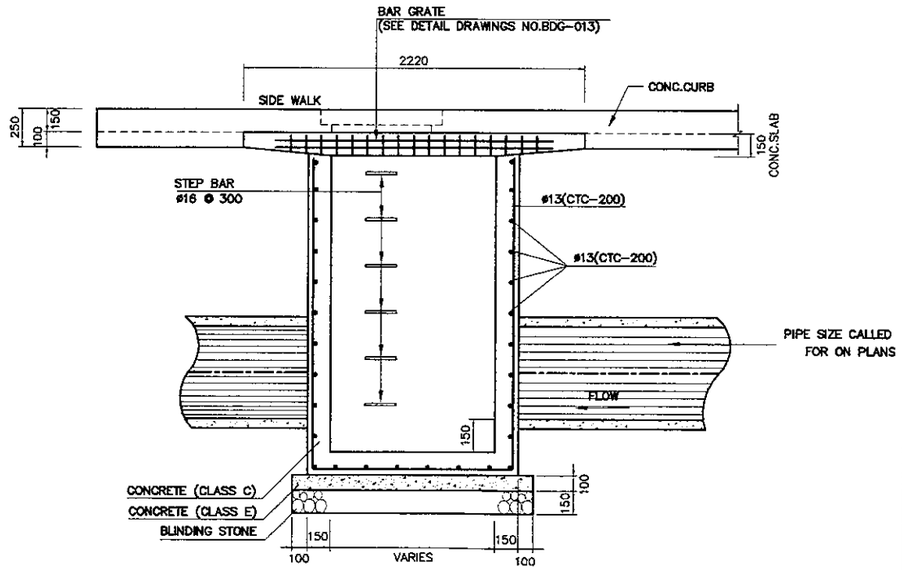

3B FRONT ELEVATION
SCALE 1 : 40

III MANHOLE TYPE - III

PRINTED: OCT. 19, 2006

JAPAN INTERNATIONAL COOPERATION AGENCY / KATAHIRA & ENGINEERS INTERNATIONAL	DESIGNED BY	CHECKED BY	SUBMITTED BY	REPUBLIC OF INDONESIA MINISTRY OF PUBLIC WORKS DIRECTORATE GENERAL OF HIGHWAYS	PROJECT AND LOCATION :	SCALE :	DRAWING TITLE :	DRAWING NO :
	Name R. UENO	Name T. OKUMURA	Name M. KIUCHI		DETAILED DESIGN STUDY OF NORTH JAVA CORRIDOR FLYOVER PROJECT GEBANG FLYOVER - CONTRACT PACKAGE 2 (NAGREG - GEBANG) WEST JAVA PROVINCE	1 : 40	STANDARD CURB INLET AND MANHOLE (V, VI) 3 OF 3	GDG-013
	Sign	Sign	Sign	APPROVED BY Ir. HERRY VAZA M.Eng.Sc NIP. : 110038400 Sign				SHEET NO :
	Date	Date	Date	Date		FULL SIZE A3		13 / 17

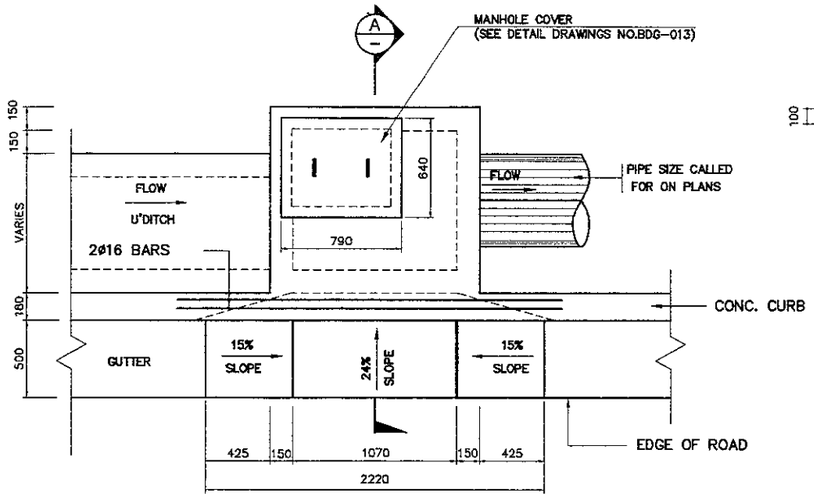

6 - PLAN
SCALE 1 : 40

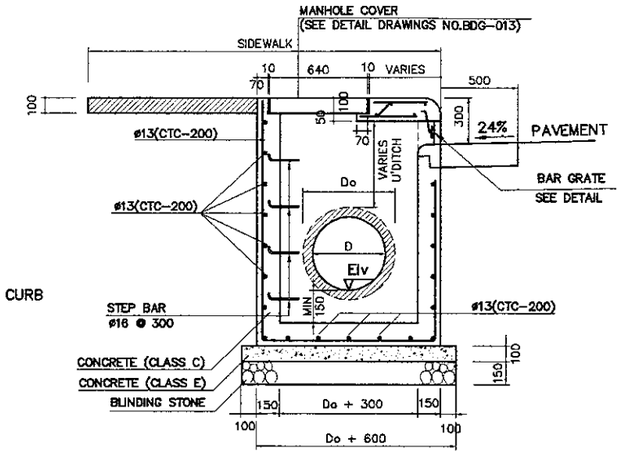

6A - SECTION
SCALE 1 : 40

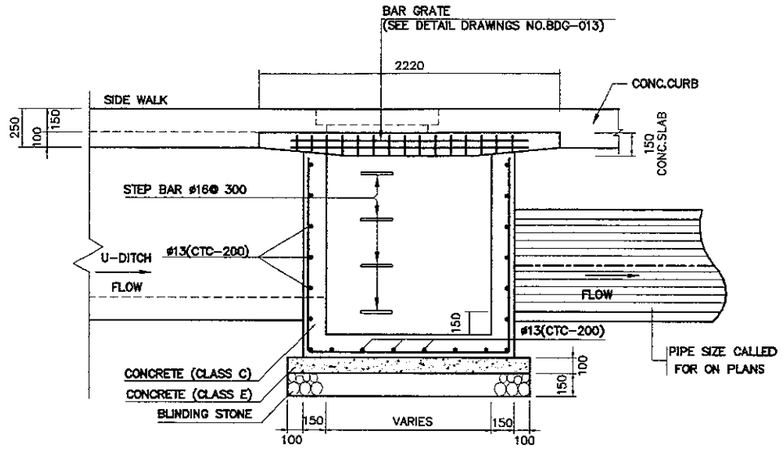

6B - FRONT ELEVATION
SCALE 1 : 40

VI - MANHOLE TYPE - VI

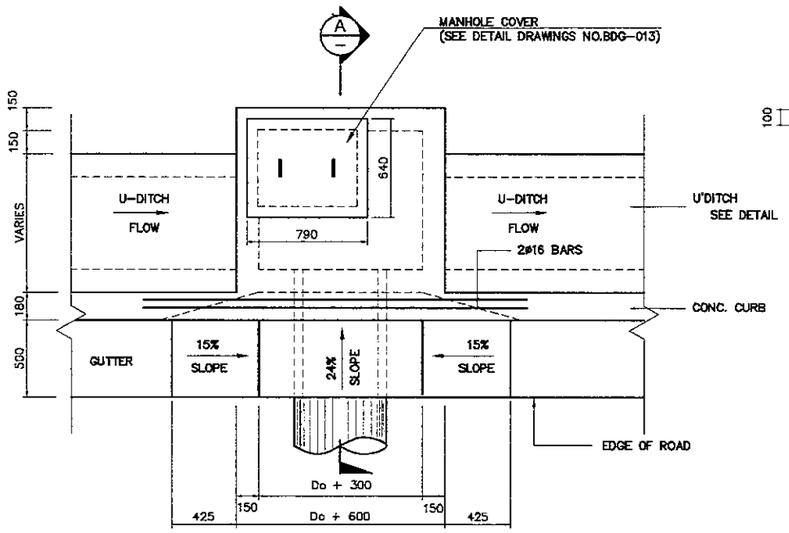

5 - PLAN
SCALE 1 : 40

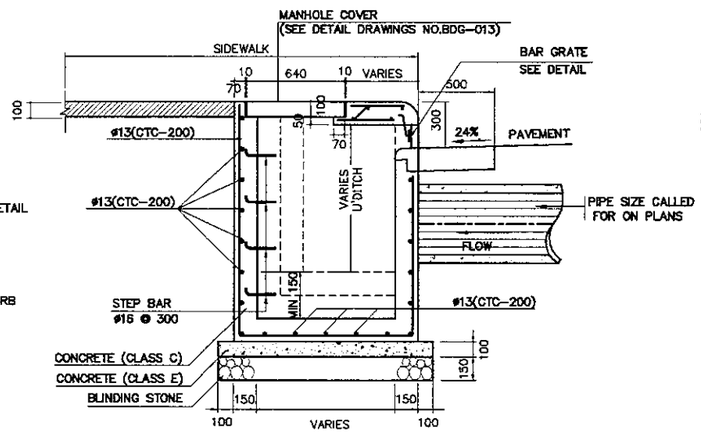

5A - SECTION
SCALE 1 : 40

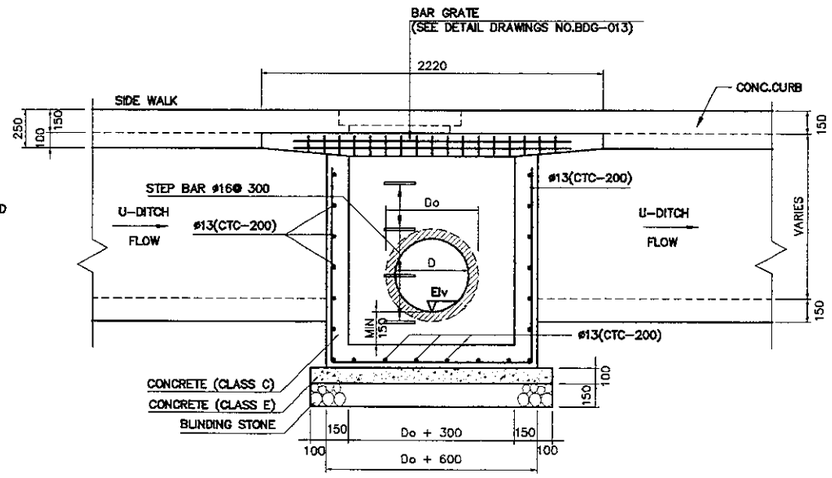

5B - FRONT ELEVATION
SCALE 1 : 40

V - MANHOLE TYPE - V

PRINTED: OCT. 19, 2006

JAPAN INTERNATIONAL COOPERATION AGENCY / KATAHIRA & ENGINEERS INTERNATIONAL	DESIGNED BY	CHECKED BY	SUBMITTED BY	REPUBLIC OF INDONESIA MINISTRY OF PUBLIC WORKS DIRECTORATE GENERAL OF HIGHWAYS	PROJECT AND LOCATION :	SCALE :	DRAWING TITLE :	DRAWING NO :
	Name R. UENO	Name T. OKUMURA	Name M. KIUCHI		DETAILED DESIGN STUDY OF NORTH JAVA CORRIDOR FLYOVER PROJECT GEBANG FLYOVER - CONTRACT PACKAGE 2 (NAGREG - GEBANG) WEST JAVA PROVINCE	1 : 20 1 : 10	DETAIL OF CURB INLET & COVER MANHOLE	GDG-014
	Sign	Sign	Sign	APPROVED BY ir. HERRY VAZA M,Eng.Sc NIP. : 110038400 Sign				SHEET NO :
	Date	Date	Date	Date		FULL SIZE A3		14 / 17

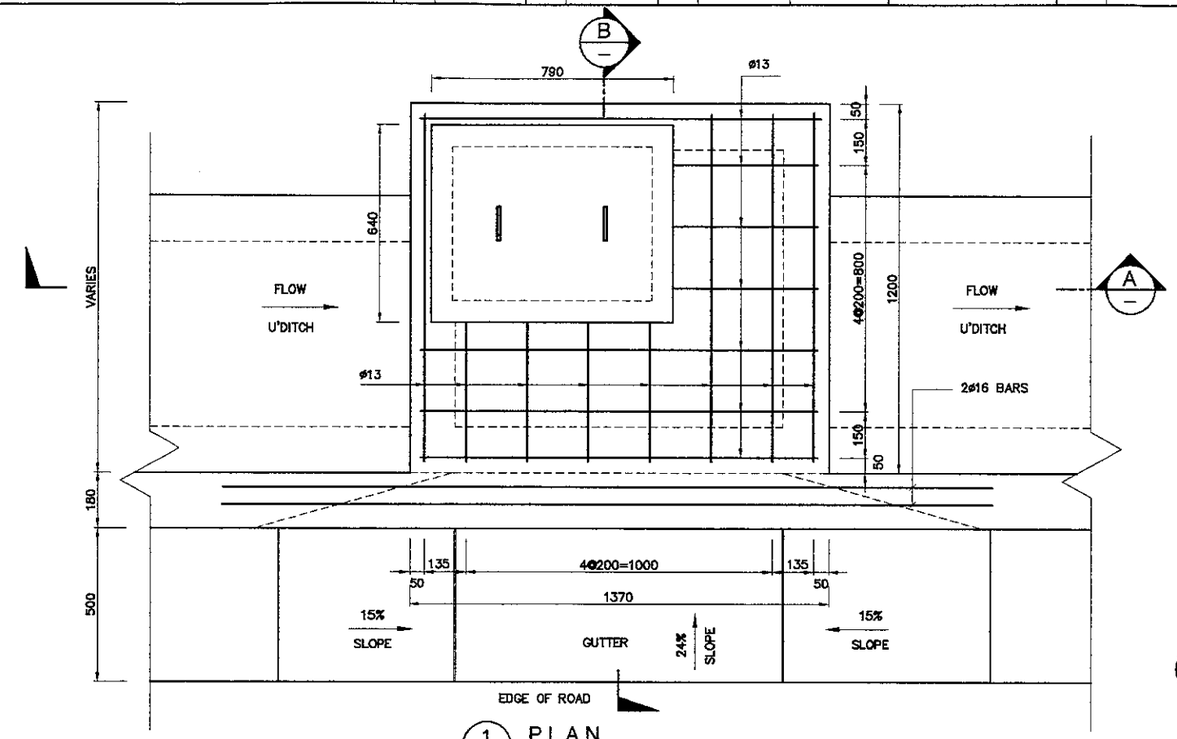

1 PLAN
SCALE 1:20

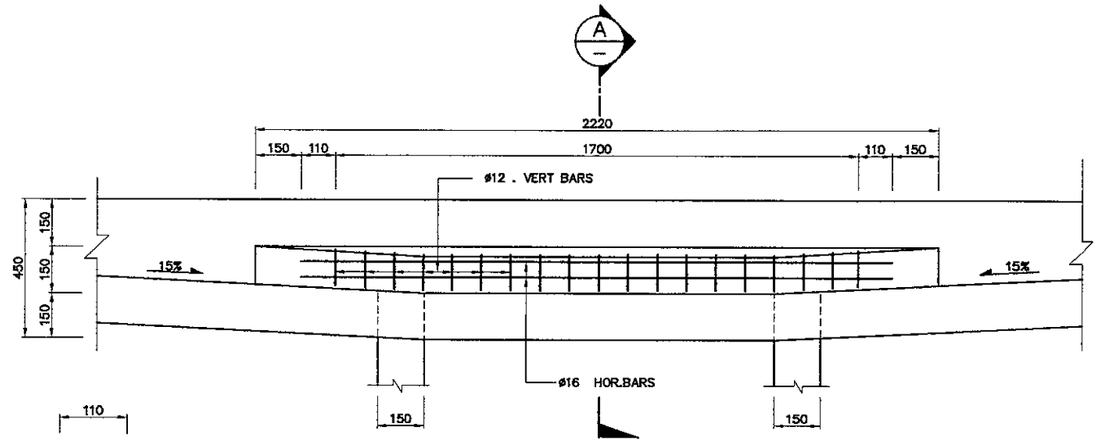

2 BAR GRATE VIEW
SCALE 1:20

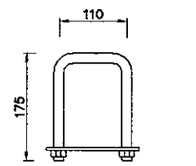

1 ELEVATION
SCALE 1:10

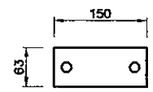

1 PLAN IRON DETAIL
SCALE 1:10

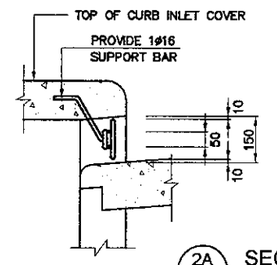

2A SECTION
SCALE 1:20

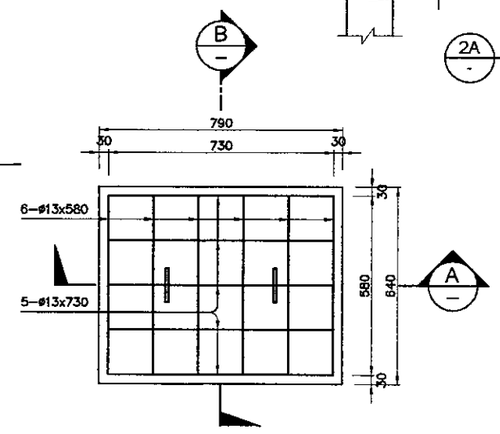

3 COVER VIEW
SCALE 1:20

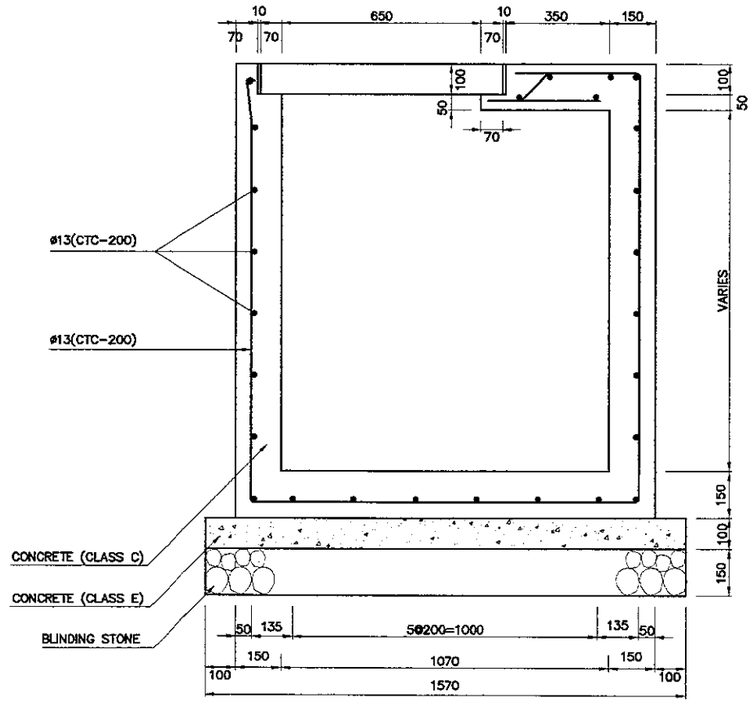

1A SECTION
SCALE 1:20

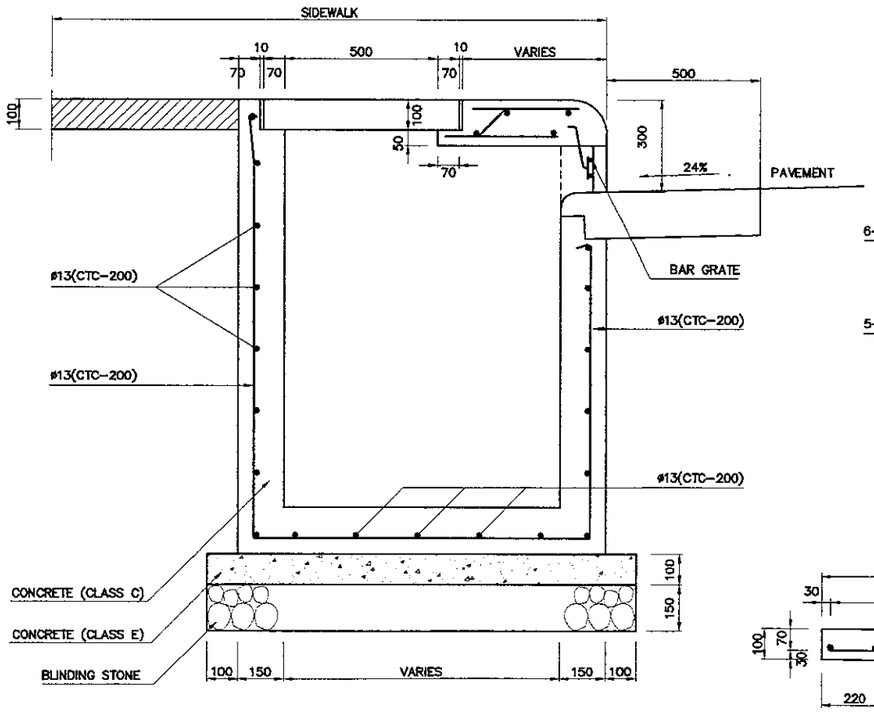

1B SECTION
SCALE 1:20

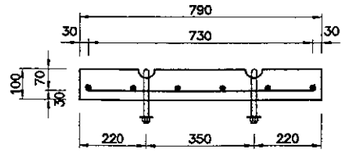

3B SECTION
SCALE 1:20

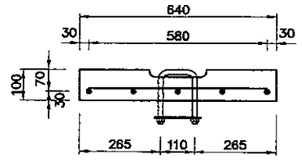

3A SECTION
SCALE 1:20

PRINTED: OCT. 19, 2006

JICA JAPAN INTERNATIONAL COOPERATION AGENCY / KATAHIRA & ENGINEERS INTERNATIONAL	DESIGNED BY	CHECKED BY	SUBMITTED BY	REPUBLIC OF INDONESIA MINISTRY OF PUBLIC WORKS DIRECTORATE GENERAL OF HIGHWAYS	PROJECT AND LOCATION :	SCALE :	DRAWING TITLE :	DRAWING NO :
	Name R. UENO	Name T. OKUMURA	Name M. KIUCHI		DETAILED DESIGN STUDY OF NORTH JAVA CORRIDOR FLYOVER PROJECT GEBANG FLYOVER - CONTRACT PACKAGE 2 (NAGREG - GEBANG) WEST JAVA PROVINCE	1 : 20	DETAILS OF DRAINAGE DITCHES DS-1, DS-2, DS-3, DS-3A, DS-4 & DS-4A	GDG-015
	Sign	Sign	Sign	APPROVED BY Ir. HERRY VAZA M.Eng.Sc NIP. : 110038400 Sign				SHEET NO :
	Date	Date	Date	Date		FULL SIZE A3		15 / 17

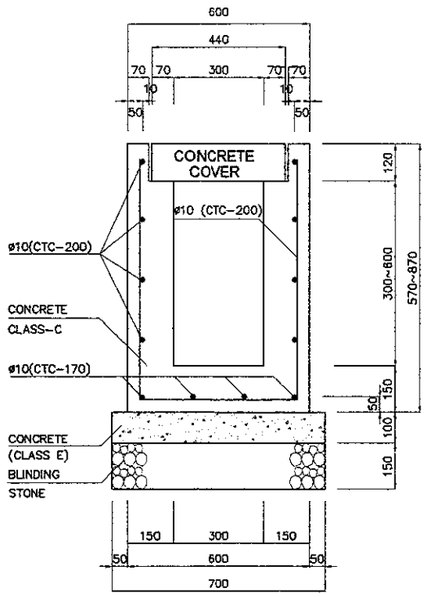

1 DS - 1
SCALE 1:20

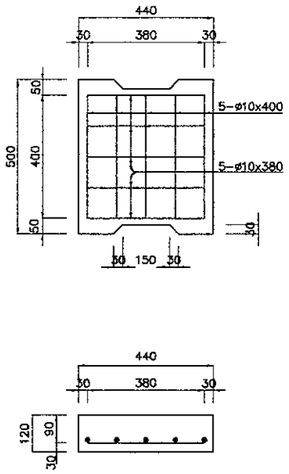

1A CONCRETE COVER FOR DS-1
SCALE 1:20

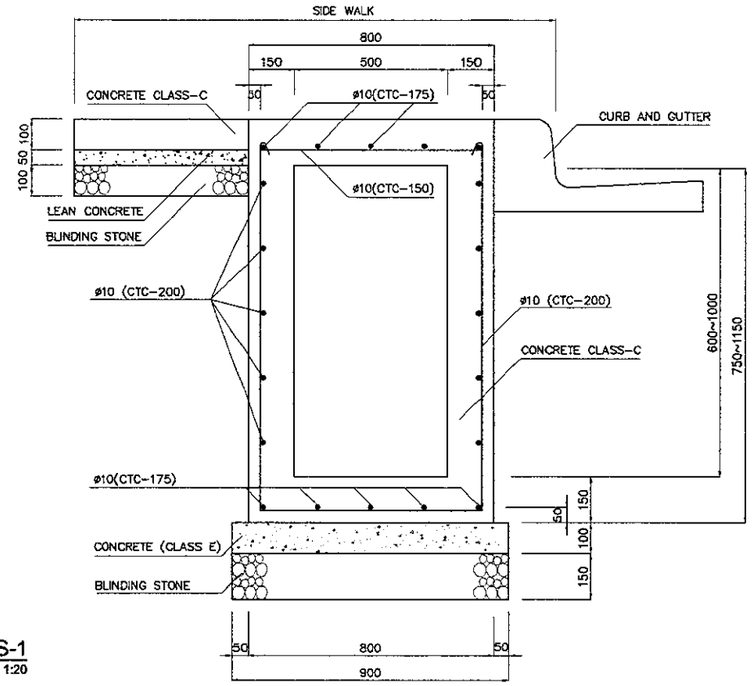

2 DS - 2
SCALE 1:20

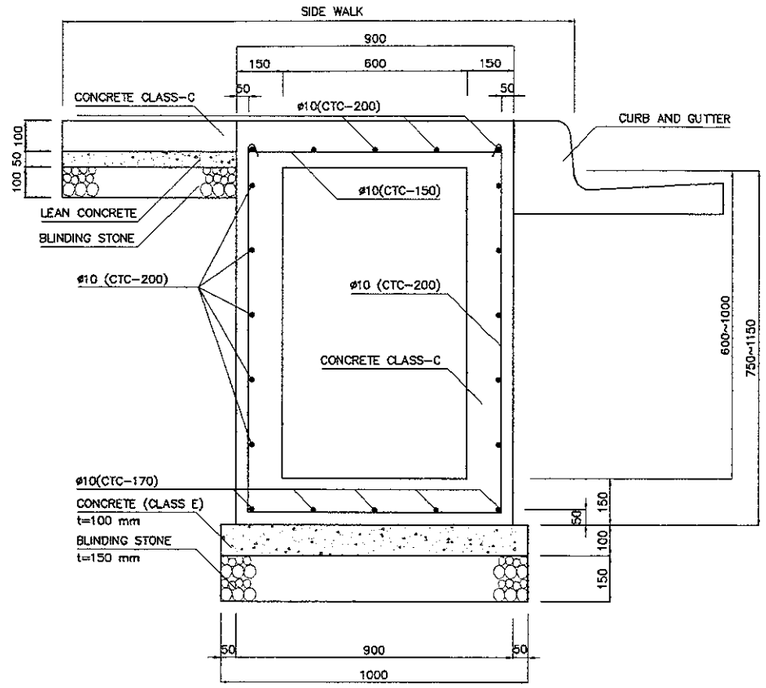

3 DS - 3
SCALE 1:20

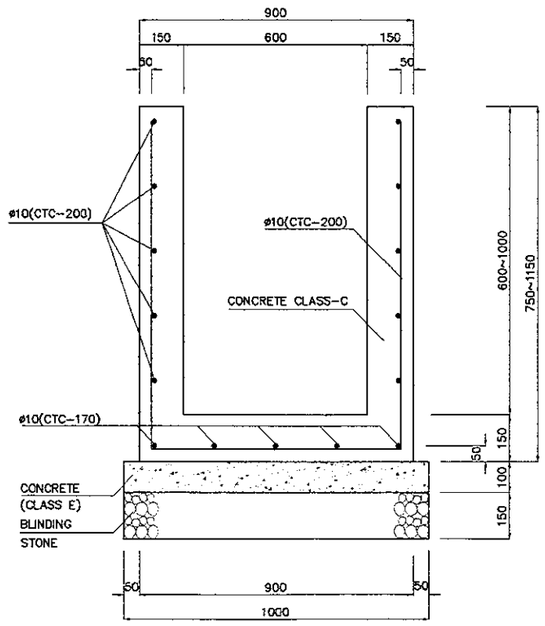

4 DS - 3A
SCALE 1:20

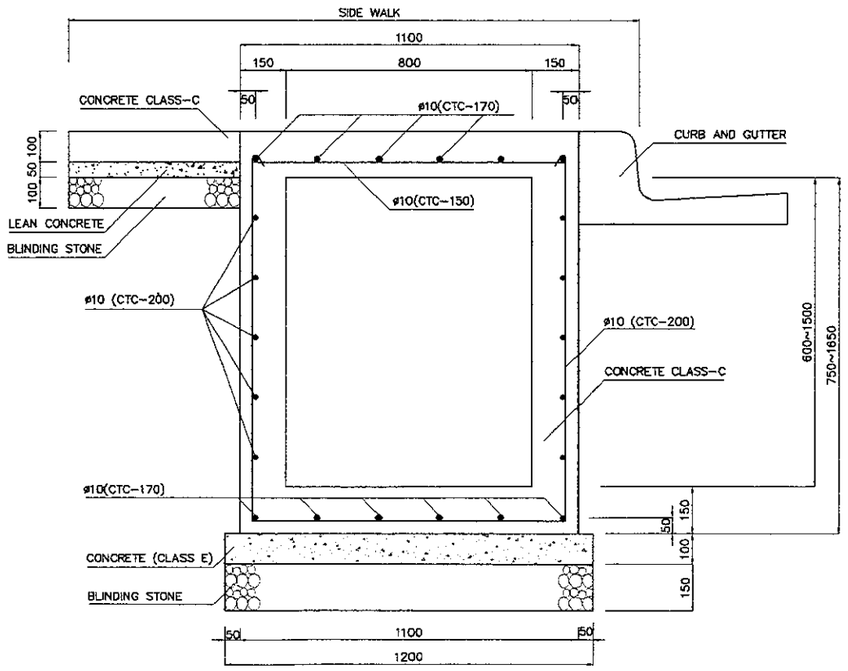

5 DS - 4
SCALE 1:20

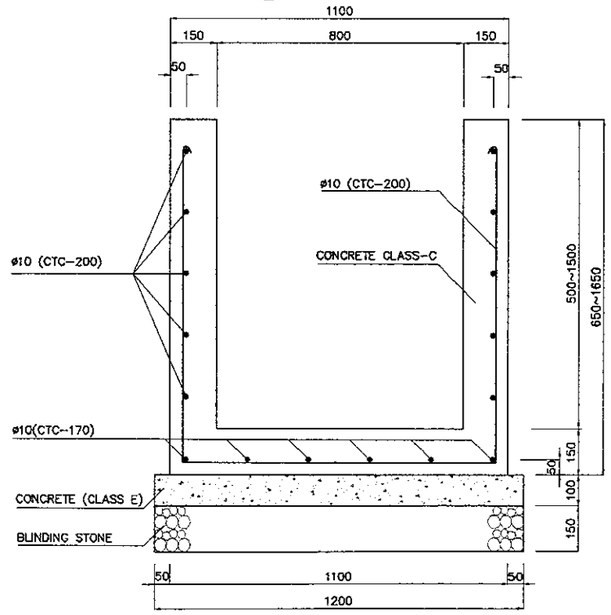

6 DS - 4A
SCALE 1:20

PRINTED: OCT. 19, 2006

JAPAN INTERNATIONAL COOPERATION AGENCY KATAHIRA & ENGINEERS INTERNATIONAL	DESIGNED BY	CHECKED BY	SUBMITTED BY	REPUBLIC OF INDONESIA MINISTRY OF PUBLIC WORKS DIRECTORATE GENERAL OF HIGHWAYS	PROJECT AND LOCATION :	SCALE :	DRAWING TITLE :	DRAWING NO :
	Name R. UENO	Name T. OKUMURA	Name M. KIUCHI		DETAILED DESIGN STUDY OF NORTH JAVA CORRIDOR FLYOVER PROJECT GEBANG FLYOVER - CONTRACT PACKAGE 2 (NAGREG - GEBANG) WEST JAVA PROVINCE	1 : 25	DETAILS OF DRAINAGE MORTAL STONE WORK TYPE I, II,III & BOX CULVERT	GDG-016
	Sign	Sign	Sign	APPROVED BY Ir. HERRY VAZA M,Eng.Sc NIP. : 110038400 Sign				SHEET NO :
	Date	Date	Date	Date		FULL SIZE A3		16 / 17

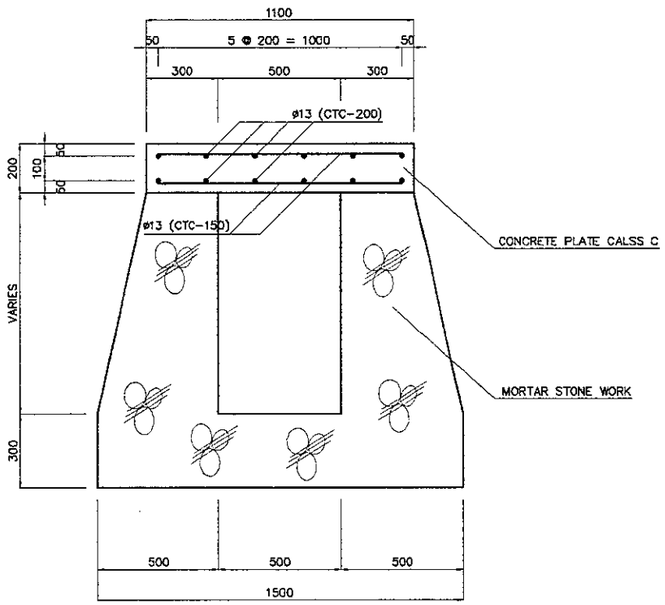

1 - MORTAR STONE WORK TYPE - I
SCALE 1:25

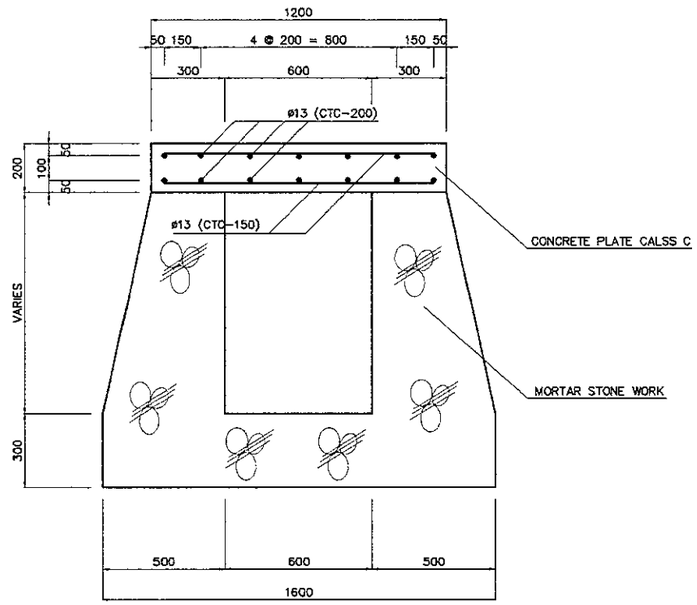

2 - MORTAR STONE WORK TYPE - II
SCALE 1:25

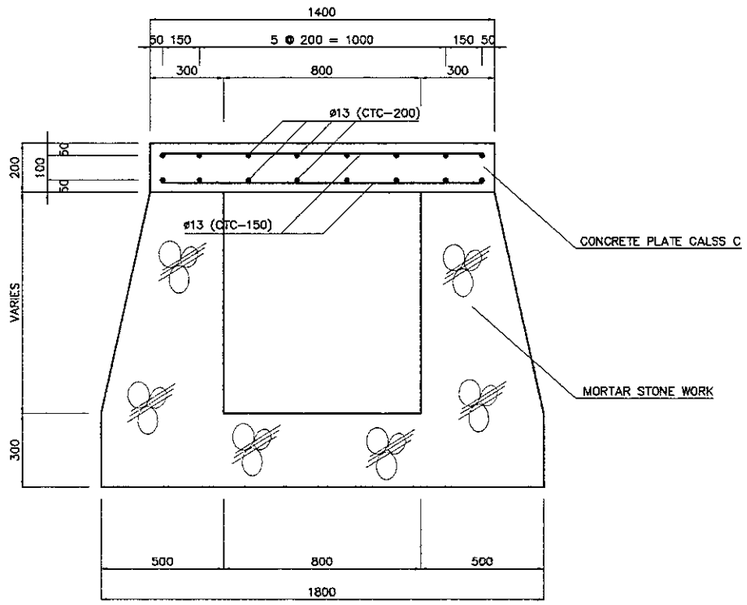

3 - MORTAR STONE WORK TYPE - III
SCALE 1:25

PRINTED: OCT. 19, 2006

JAPAN INTERNATIONAL COOPERATION AGENCY / KATAHIRA & ENGINEERS INTERNATIONAL	DESIGNED BY	CHECKED BY	SUBMITTED BY	REPUBLIC OF INDONESIA MINISTRY OF PUBLIC WORKS DIRECTORATE GENERAL OF HIGHWAYS	PROJECT AND LOCATION :	SCALE :	DRAWING TITLE :	DRAWING NO :
	Name: R. UENO	Name: T. OKUMURA	Name: M. KIUCHI		DETAILED DESIGN STUDY OF NORTH JAVA CORRIDOR FLYOVER PROJECT GEBANG FLYOVER - CONTRACT PACKAGE 2 (NAGREG - GEBANG) WEST JAVA PROVINCE	1:20 N T S	TRENCHING AND BEDDING DETAILS FOR CUT AREAS	GDG-017
	Sign	Sign	Sign	APPROVED BY: Ir. HERRY VAZA M.Eng.Sc NIP. : 110038400 — Sign / Date		FULL SIZE A3		SHEET NO : 17 / 17
	Date	Date	Date					

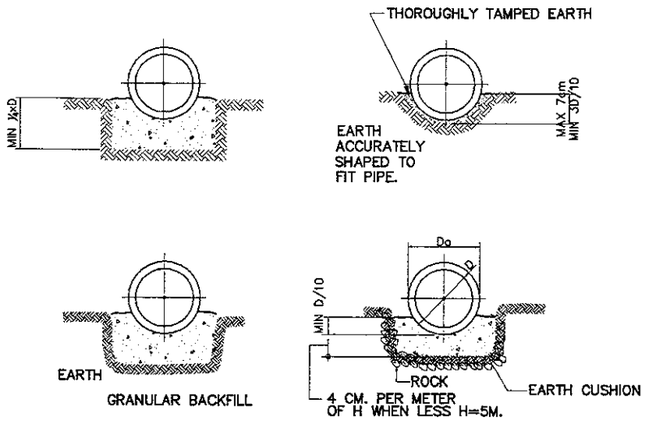

ORDINARY BEDDING

1 TYPICAL BEDDING FOR PROJECTING CONDUITS
SCALE NTS

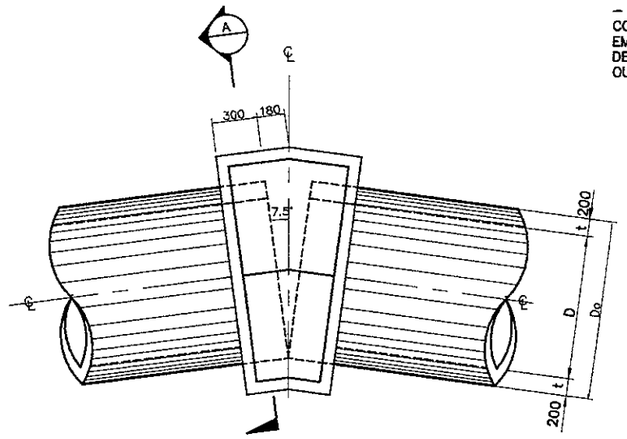

3 PLAN
SCALE 1:20

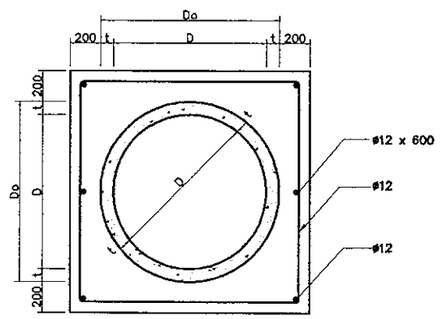

3A SECTION
SCALE 1:20

3 PIPE COLLAR AT BEND DETAILS
SCALE 1:20

STANDARD CONCRETE PIPE COLLAR		
PIPE DIAMETER (MM.)	CONCRETE (CU.M.)	REBARS (KG.)
460	0.493	8.5
610	0.656	10.0
760	0.842	11.0
910	1.056	12.5
1070	1.314	16.5
1220	1.586	19.0
1370	1.914	20.8
1520	2.241	22.5

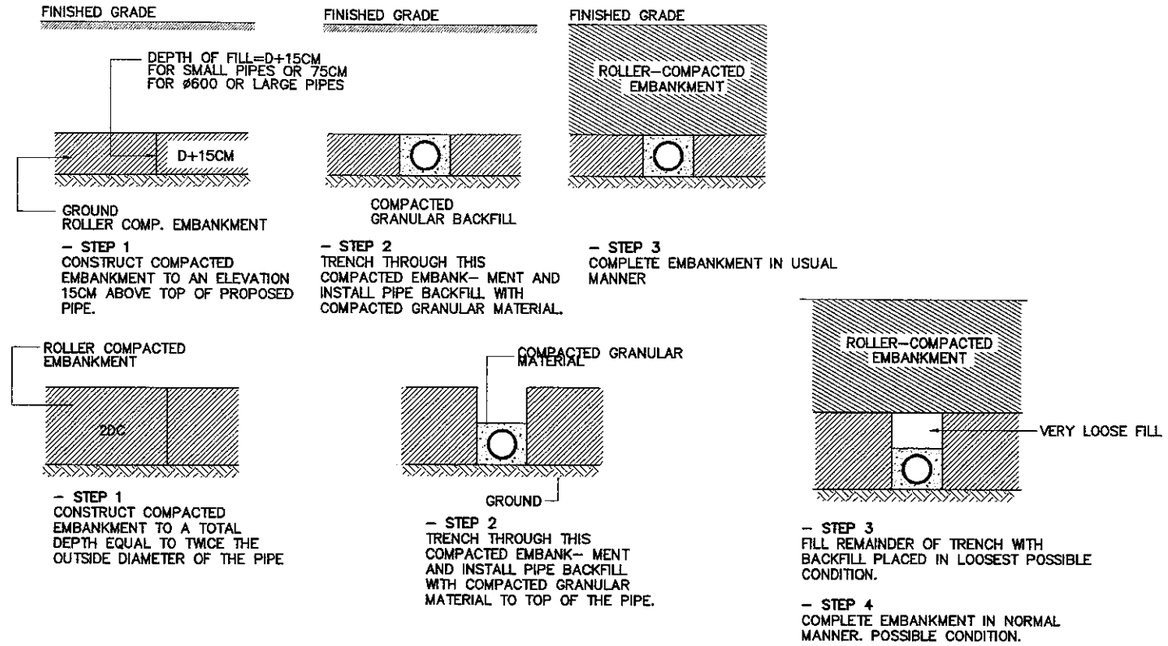

2 METHODS OF PIPE INSTALLATION FOR FILL AREAS
SCALE NTS

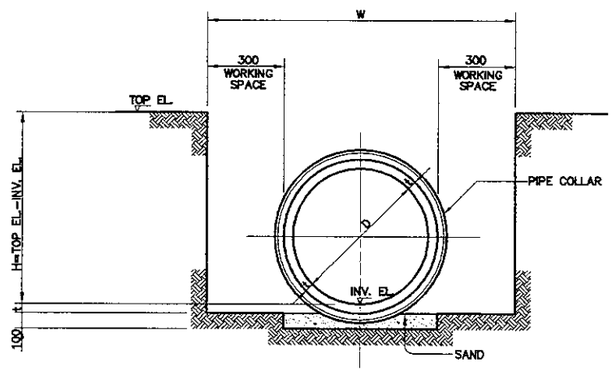

4 FRONT VIEW
SCALE 1:20

NOTES:

1. ALL DIMENSIONS SHOWN ON THIS PLAN ARE IN MILLIMETER UNITS OTHERWISE INDICATED.
2. D = INTERNAL DIAMETER.

4 TRENCHING AND BEDDING DETAILS FOR CUT AREAS
SCALE 1:20

PRINTED: OCT. 19, 2006

JAPAN INTERNATIONAL COOPERATION AGENCY KATAHIRA & ENGINEERS INTERNATIONAL	DESIGNED BY		CHECKED BY		SUBMITTED BY		REPUBLIC OF INDONESIA MINISTRY OF PUBLIC WORKS DIRECTORATE GENERAL OF HIGHWAYS			PROJECT AND LOCATION :	SCALE :	DRAWING TITLE :	DRAWING NO :
	Name	R. UENO	Name	T. OKUMURA	Name	M. KIUCHI				DETAILED DESIGN STUDY OF NORTH JAVA CORRIDOR FLYOVER PROJECT GEBANG FLYOVER - CONTRACT PACKAGE 2 (NAGREG - GEBANG) WEST JAVA PROVINCE	NTS	DRAINAGE SCHEDULE AT FLYOVER	GDV-001
	Sign		Sign		Sign		APPROVED BY	ir. HERRY VAZA M,Eng.Sc	Sign				SHEET NO :
	Date		Date		Date			NIP. : 110038400	Date		FULL SIZE A3		01 / 43

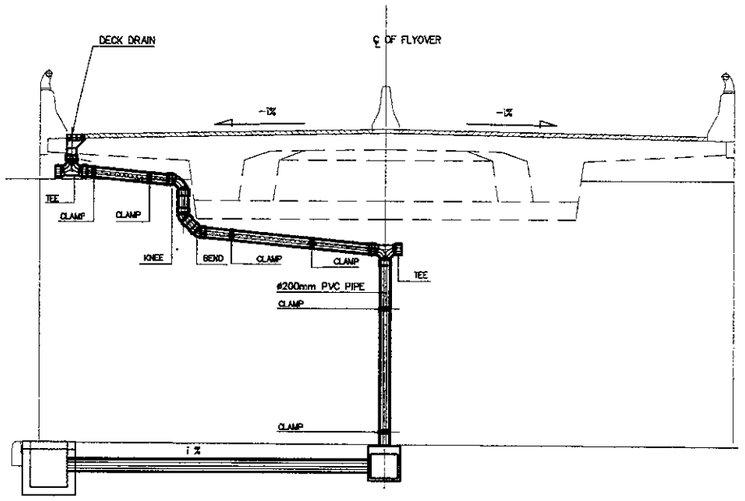

1 FRONT VIEW OF ABUTMENT
NTS

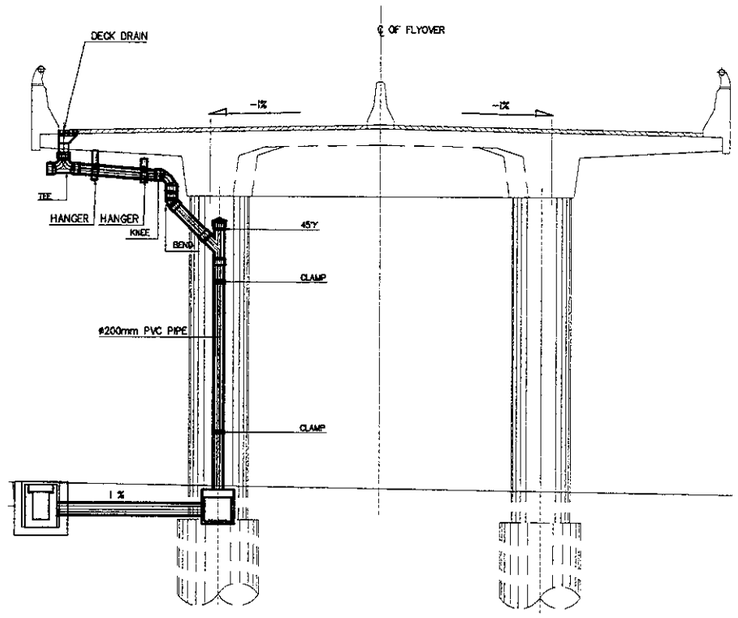

2 FRONT VIEW OF PC SECTION
NTS

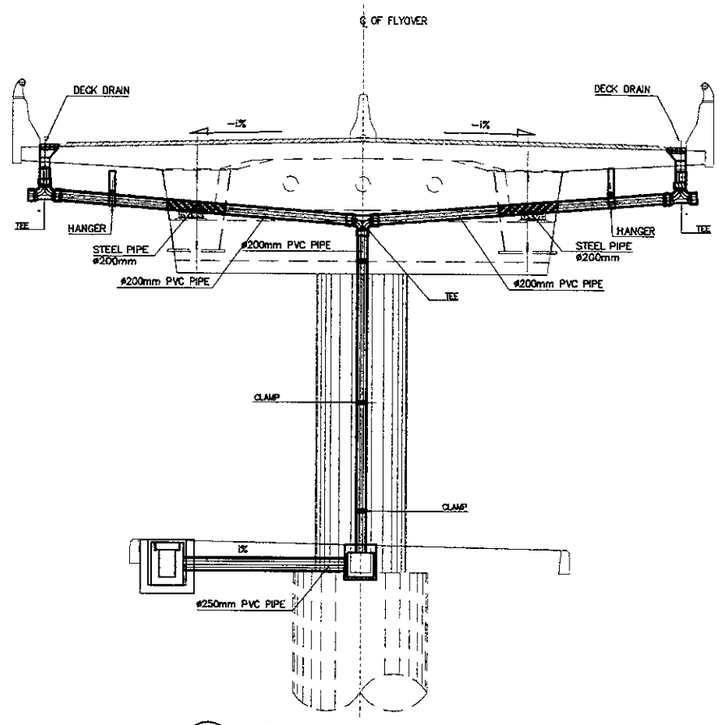

3 FRONT VIEW OF STEEL SECTION
NTS

DRAINAGE SCHEDULE

BRIDGE TYPE	ABUTMENT/PIER NO	STATION LIMIT	LEFT SIDE: APPLIED HORIZONTAL DRAIN: TYPE OF DRAIN	LEFT SIDE: APPLIED HORIZONTAL DRAIN: LENGHT (m)	LEFT SIDE: DECK DRAIN	RIGHT SIDE: DECK DRAIN	RIGHT SIDE: APPLIED HORIZONTAL DRAIN: LENGHT (m)	RIGHT SIDE: APPLIED HORIZONTAL DRAIN: TYPE OF DRAIN	PIPE ø200mm (m)	ACCESSORIES: BEND (unit)	TEE (unit)	KNEE (unit)	45°Y (unit)	CLEAN OUT (unit)
PC	A1	0+316.00	NONE	NONE	NONE	NONE	10	STEEL GUTTER AND SCREEN	4.9	0	1	1	0	1
	P1	0+336.00					10		6.1	0	1	3	0	1
	P2	0+356.00					10		6.8	0	1	3	0	1
	P3	0+376.00					10		6.3	0	1	3	0	1
STEEL	P4	0+396.00	NONE	NONE	NONE	NONE	27	SURFACE DOWN AND OUTER GUTTER	9.9	0	2	0	0	2
	P5	0+423.00					18		0.0	0	2	0	0	2
	P6	0+459.00					18		0.0	0	2	0	0	2
	P7	0+486.00					27		10.2	0	2	0	0	2
	P8	0+513.00					27		10.6	0	2	0	0	2
	P9	0+540.00					27		10.4	0	2	0	0	2
	P10	0+567.00					27		10.4	0	2	0	0	2
	P11	0+594.00					27		9.6	0	2	0	0	2
	P12	0+621.00					27		9.7	0	2	0	0	2
PC	P13	0+641.00	NONE	NONE	NONE	NONE	10	STEEL GUTTER AND SCREEN	6.7	0	1	3	0	1
	P14	0+661.00					10		6.4	0	1	3	0	1
	P15	0+681.00					10		6.0	0	1	3	0	1
	A2	0+701.00					10		4.9	0	1	3	0	1

APPROACH 1

STA	DECK DRAIN TYPE II	POSITION: LEFT	POSITION: RIGHT	PIPE: SIZE (ø,mm)	PIPE: LENGHT (m)	ACCESSORIES: KNEE (unit)	ACCESSORIES: TEE 250X200 (unit)
0+176.00	DD-1R	NONE	1	200	0.65	1	1
0+196.00	DD-2R	NONE	1	200	0.92	1	1
0+216.00	DD-3R	NONE	1	200	1.31	1	1
0+236.00	DD-4R	NONE	1	200	1.51	1	0
0+256.00	DD-5R	NONE	1	200	2.46	1	0
0+276.00	DD-6R	NONE	1	200	3.36	1	0
0+296.00	DD-7R	NONE	1	200	4.37	1	0

APPROACH 2

STA	DECK DRAIN TYPE II	POSITION: LEFT	POSITION: RIGHT	PIPE: SIZE (ø,mm)	PIPE: LENGHT (m)	ACCESSORIES: KNEE (unit)	ACCESSORIES: TEE 250X200 (unit)
0+721.00	DD-8R	NONE	1	200	5.41	1	0
0+741.00	DD-7R	NONE	1	200	4.68	1	0
0+761.00	DD-6R	NONE	1	200	3.97	1	0
0+781.00	DD-5R	NONE	1	200	3.01	1	0
0+801.00	DD-4R	NONE	1	200	2.19	1	0
0+821.00	DD-3R	NONE	1	200	1.29	1	1
0+841.00	DD-2R	NONE	1	200	1.04	1	1
0+861.00	DD-1R	NONE	1	200	0.15	1	1

JAPAN INTERNATIONAL COOPERATION AGENCY / KATAHIRA & ENGINEERS INTERNATIONAL	DESIGNED BY	CHECKED BY	SUBMITTED BY	REPUBLIC OF INDONESIA MINISTRY OF PUBLIC WORKS DIRECTORATE GENERAL OF HIGHWAYS	PROJECT AND LOCATION :	SCALE :	DRAWING TITLE :	DRAWING NO :
	Name: R. UENO	Name: T. OKUMURA	Name: M. KIUCHI		DETAILED DESIGN STUDY OF NORTH JAVA CORRIDOR FLYOVER PROJECT GEBANG FLYOVER - CONTRACT PACKAGE 2 (NAGREG - GEBANG) WEST JAVA PROVINCE	NTS	DRAINAGE SCHEDULE UNDER FLYOVER	GDV-002
	Sign	Sign	Sign	APPROVED BY: Ir. HERRY VAZA M,Eng.Sc NIP. : 110038400				SHEET NO :
	Date	Date	Date	Sign / Date		FULL SIZE A3		02 / 43

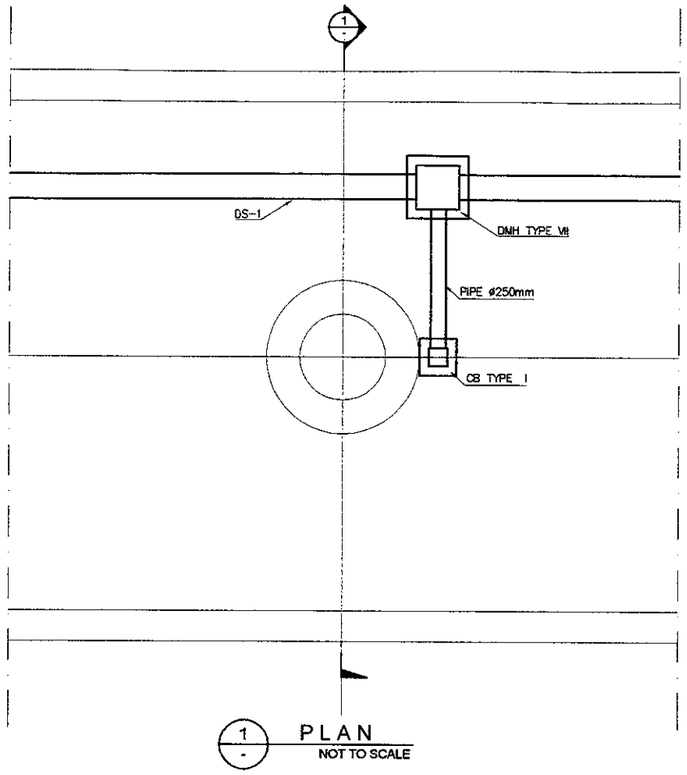

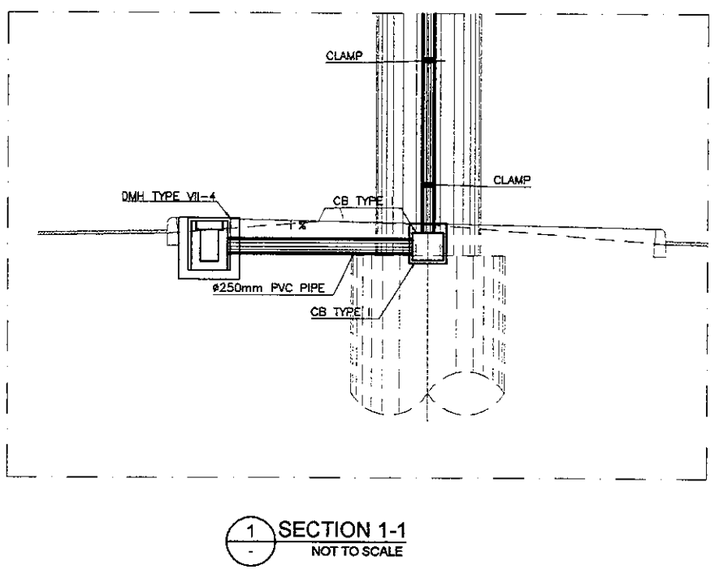

DRAINAGE SCHEDULE

FROM MH	TO MH	LOCATION	LENGTH (m)	U'DITCH/PIPE SLOPE(%)	INVERT ELEV. (m) UPSTREAM	INVERT ELEV. (m) DOWNSTREAM	REMARKS
CB TYPE I-1	DMH TYPE VII-1	A1-A1	1.5	3.00	2.313	2.268	PIPE ø250
DMH TYPE VII-1	DMH TYPE VII-2	A1-P1	19.3	4.00	2.268	1.496	U'DITCH DS 1
CB TYPE I-5	DMH TYPE VII-5	P4-P4	2	2.00	3.302	3.262	PIPE ø250
DMH TYPE VII-5	DMH TYPE VII-4	P4-P3	19.5	2.00	3.262	2.872	U'DITCH DS 1
CB TYPE I-4	DMH TYPE VII-4	P3-P3	1.5	3.00	2.917	2.872	PIPE ø250
DMH TYPE VII-4	DMH TYPE VII-3	P3-P2	19.2	3.00	2.872	2.296	U'DITCH DS 1
CB TYPE I-3	DMH TYPE VII-3	P2-P2	1.5	3.00	2.341	2.296	PIPE ø250
DMH TYPE VII-3	DMH TYPE VII-2	P2-P1	20	4.00	2.296	2.268	U'DITCH DS 1
CB TYPE I-2	DMH TYPE VII-2	P1-P1	1.5	3.00	1.541	1.496	PIPE ø250
DMH TYPE VII-2	DMH-15	P1-P1	5.7	2.00	1.496	1.382	RCP ø600 (B)
CB TYPE I-6	DMH TYPE VII-6	P7-P7	2	3.00	3.708	3.648	PIPE ø250
DMH TYPE VII-6	DMH TYPE VII-7	P7-P8	26.3	2.00	3.648	3.122	U'DITCH DS 1
CB TYPE I-7	DMH TYPE VII-7	P8-P8	2	3.00	3.182	3.122	PIPE ø250
DMH TYPE VII-7	DMH TYPE VII-8	P8-P9	26.6	3.00	3.122	2.324	U'DITCH DS 1
CB TYPE I-8	DMH TYPE VII-8	P9-P9	0.8	4.00	2.356	2.324	PIPE ø250
CB TYPE I-10	DMH TYPE VII-10	P11-P11	0.8	2.00	3.076	3.060	PIPE ø250
DMH TYPE VII-10	DMH TYPE VII-9	P11-P10	26.3	2.00	3060	2.534	U'DITCH DS 1
CB TYPE I-9	DMH TYPE VII-9	P10-P10	0.8	3.00	2.558	2.534	PIPE ø250
DMH TYPE VII-9	DMH TYPE VII-8	P10-P9	26.3	0.80	2.534	2.324	U'DITCH DS 1
DMH TYPE VII-8	DMH-22	P9-P9	5.6	2.00	2.324	2.212	RCP ø600 (B)
CB TYPE I-11	DMH TYPE VII-11	P12-P12	1.2	3.00	3.308	3.272	PIPE ø250
DMH TYPE VII-11	DMH TYPE VII-12	P12-P13	19.3	1.00	3.272	3.079	U'DITCH DS 1
CB TYPE I-12	DMH TYPE VII-12	P13-P13	1.6	3.00	3.127	3.079	PIPE ø250
DMH TYPE VII-12	DMH TYPE VII-13	P13-P14	19.3	1.00	3.079	2.886	U'DITCH DS 1
CB TYPE I-13	DMH TYPE VII-13	P14-P14	1.6	3.00	2.934	2.886	PIPE ø250
DMH TYPE VII-13	DMH TYPE VII-14	P14-P15	19.4	1.00	2.886	2.692	U'DITCH DS 1
CB TYPE I-14	DMH TYPE VII-14	P15-P15	0.7	3.00	2.713	2.692	PIPE ø250
CB TYPE I-15	DMH TYPE VII-15	A2-A2	0.7	3.00	2.949	2.864	PIPE ø250
DMH TYPE VII-15	DMH TYPE VII-14	A2-P15	19.1	0.90	2.864	2.692	U'DITCH DS 1
DMH TYPE VII-14	DMH-30	P15-P15	8.4	2.00	2.692	2.564	RCP ø600 (B)

DRAINAGE ALONG APPROACH RIGHT SIDE

FROM STA/MH	TO STA/MH	TYPE OF U'DITCH/PIPE	LENGTH (m)	U'DITCH/PIPE SLOPE(%)
0+296.00	0+276.00	U'DITCH DS 5	20	0.30
0+276.00	0+256.00	U'DITCH DS 5	20	0.30
0+256.00	0+236.00	U'DITCH DS 5	20	0.30
0+236.00	0+216.00	U'DITCH DS 5	20	0.59
0+216.00	0+196.00	PIPE ø250	20	1.00
0+196.00	0+176.00	PIPE ø250	20	1.00
0+176.00	DMH VIII-1	PIPE ø250	28	1.00
DMH VIII-1	DMH-06	RCP ø600 (B)	6	0.5

FROM STA/MH	TO STA/MH	TYPE OF U'DITCH/PIPE	LENGTH (m)	U'DITCH/PIPE SLOPE(%)
0+721.00	0+741.00	U'DITCH DS 5	20	0.40
0+741.00	0+761.00	U'DITCH DS 5	20	0.40
0+761.00	0+781.00	U'DITCH DS 5	20	0.40
0+781.00	0+801.00	U'DITCH DS 5	20	0.40
0+801.00	0+821.00	U'DITCH DS 5	20	0.40
0+821.00	0+841.00	U'DITCH DS 5	20	0.40
0+841.00	0+861.00	PIPE ø250	20	0.40
0+861.00	DMH VIII-1	PIPE ø250	27	0.40
DMH VIII-1	DMH-42	RCP ø600 (B)	6	0.50

JAPAN INTERNATIONAL COOPERATION AGENCY / KATAHIRA & ENGINEERS INTERNATIONAL	DESIGNED BY	CHECKED BY	SUBMITTED BY	REPUBLIC OF INDONESIA MINISTRY OF PUBLIC WORKS DIRECTORATE GENERAL OF HIGHWAYS	PROJECT AND LOCATION :	SCALE :	DRAWING TITLE :	DRAWING NO :
	Name: R. UENO	Name: T. OKUMURA	Name: M. KIUCHI		DETAILED DESIGN STUDY OF NORTH JAVA CORRIDOR FLYOVER PROJECT GEBANG FLYOVER - CONTRACT PACKAGE 2 (NAGREG - GEBANG) WEST JAVA PROVINCE	1 : 200	DRAINAGE PLAN AND ELEVATION AT VIADUCT 1 OF 8	GDV-003
	Sign	Sign	Sign	APPROVED BY: Ir. HERRY VAZA M,Eng.Sc NIP. : 110038400		FULL SIZE A3		SHEET NO : 03 / 43
	Date	Date	Date	Sign / Date				

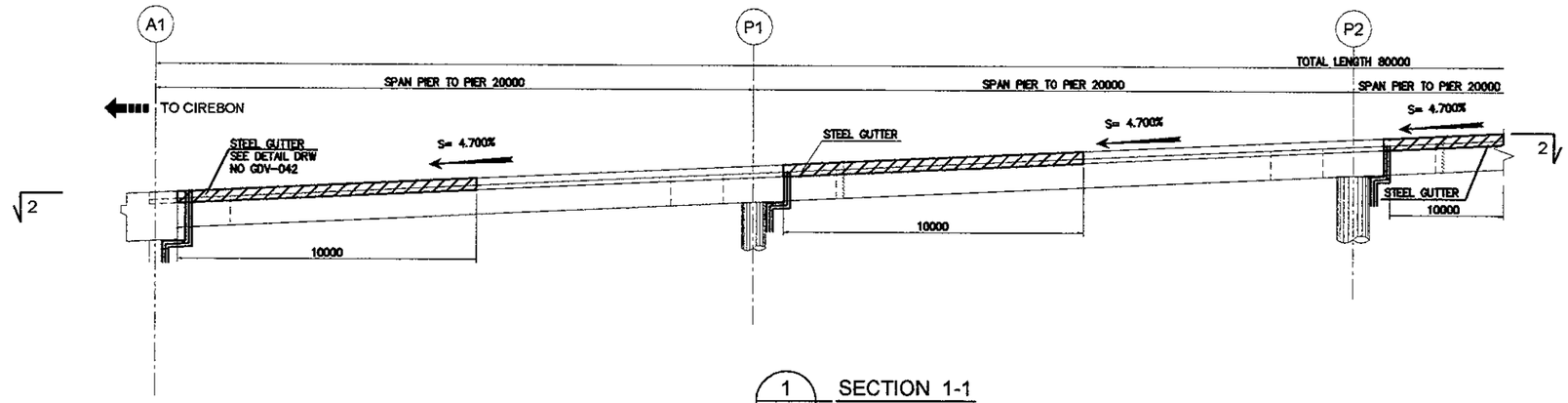

1 SECTION 1-1
SCALE : 1 : 200

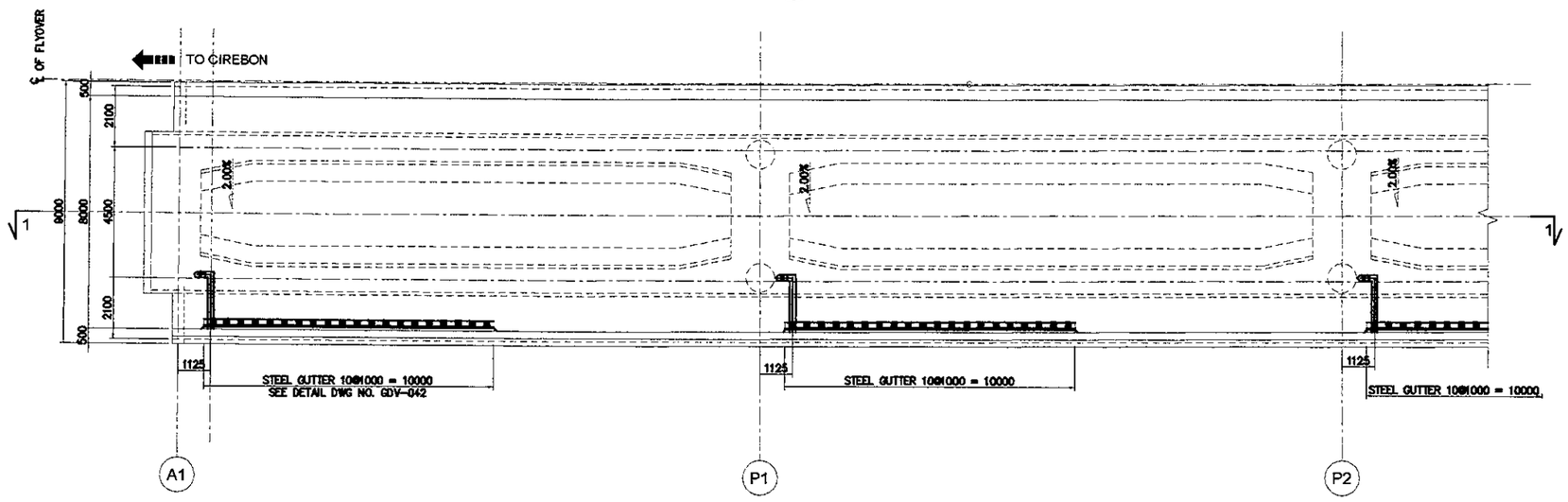

2 SECTION 2-2
SCALE : 1 : 200

PRINTED: OCT. 19, 2006

JAPAN INTERNATIONAL COOPERATION AGENCY KATAHIRA & ENGINEERS INTERNATIONAL	DESIGNED BY	CHECKED BY	SUBMITTED BY	REPUBLIC OF INDONESIA MINISTRY OF PUBLIC WORKS DIRECTORATE GENERAL OF HIGHWAYS	PROJECT AND LOCATION :	SCALE :	DRAWING TITLE :	DRAWING NO :
	Name: R. UENO	Name: T. OKUMURA	Name: M. KIUCHI		DETAILED DESIGN STUDY OF NORTH JAVA CORRIDOR FLYOVER PROJECT GEBANG FLYOVER - CONTRACT PACKAGE 2 (NAGREG - GEBANG) WEST JAVA PROVINCE	1 : 200	DRAINAGE PLAN AND ELEVATION AT VIADUCT 2 OF 8	GDV-004
	Sign	Sign	Sign	APPROVED BY: Ir. HERRY VAZA M.Eng.Sc				SHEET NO :
	Date	Date	Date	NIP. : 110038400 / Sign / Date		FULL SIZE A3		04 / 43

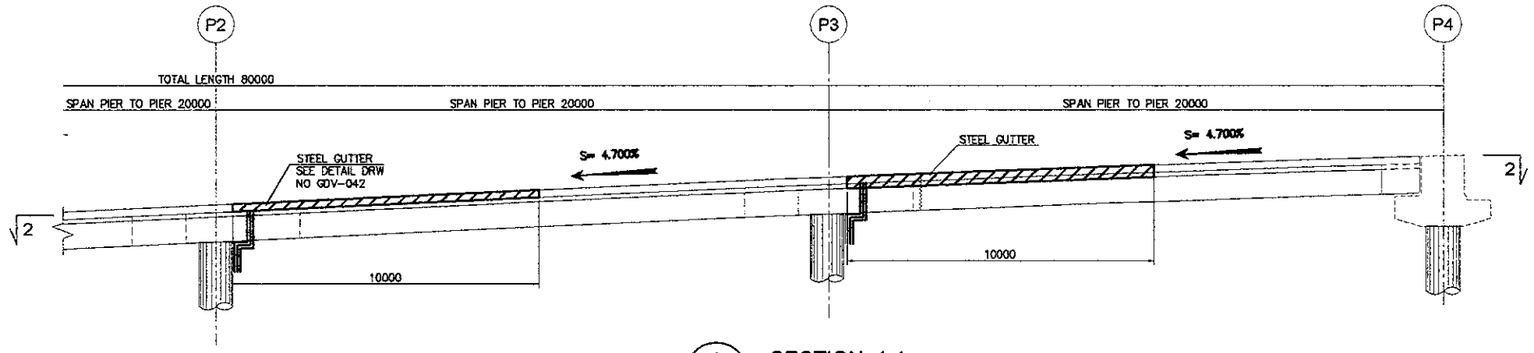

1 SECTION 1-1
SCALE : 1 : 200

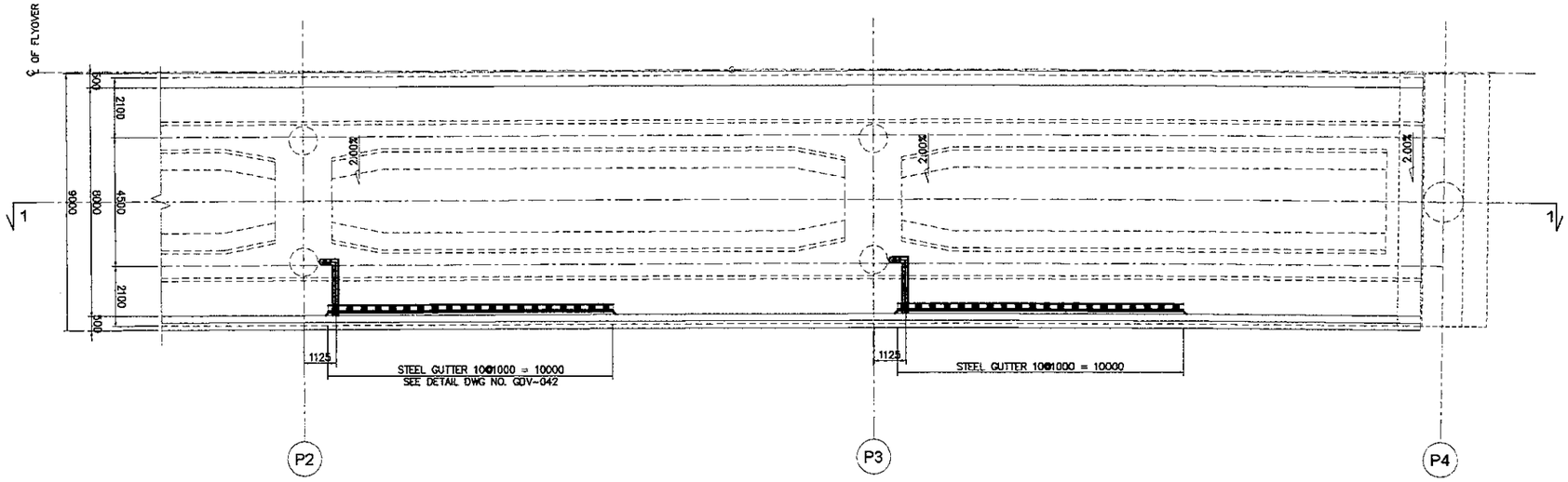

2 SECTION 2-2
SCALE : 1 : 200

PRINTED: OCT. 19, 2006

JAPAN INTERNATIONAL COOPERATION AGENCY / KATAHIRA & ENGINEERS INTERNATIONAL	DESIGNED BY	CHECKED BY	SUBMITTED BY	REPUBLIC OF INDONESIA MINISTRY OF PUBLIC WORKS DIRECTORATE GENERAL OF HIGHWAYS	PROJECT AND LOCATION :	SCALE :	DRAWING TITLE :	DRAWING NO :
	Name: R. UENO	Name: T. OKUMURA	Name: M. KIUCHI		DETAILED DESIGN STUDY OF NORTH JAVA CORRIDOR FLYOVER PROJECT GEBANG FLYOVER - CONTRACT PACKAGE 2 (NAGREG - GEBANG) WEST JAVA PROVINCE	1 : 200	DRAINAGE PLAN AND ELEVATION AT VIADUCT 3 OF 8	GDV-005
	Sign	Sign	Sign	APPROVED BY: Ir. HERRY VAZA M,Eng.Sc				SHEET NO :
	Date	Date	Date	NIP. : 110038400 — Sign / Date		FULL SIZE A3		05 / 43

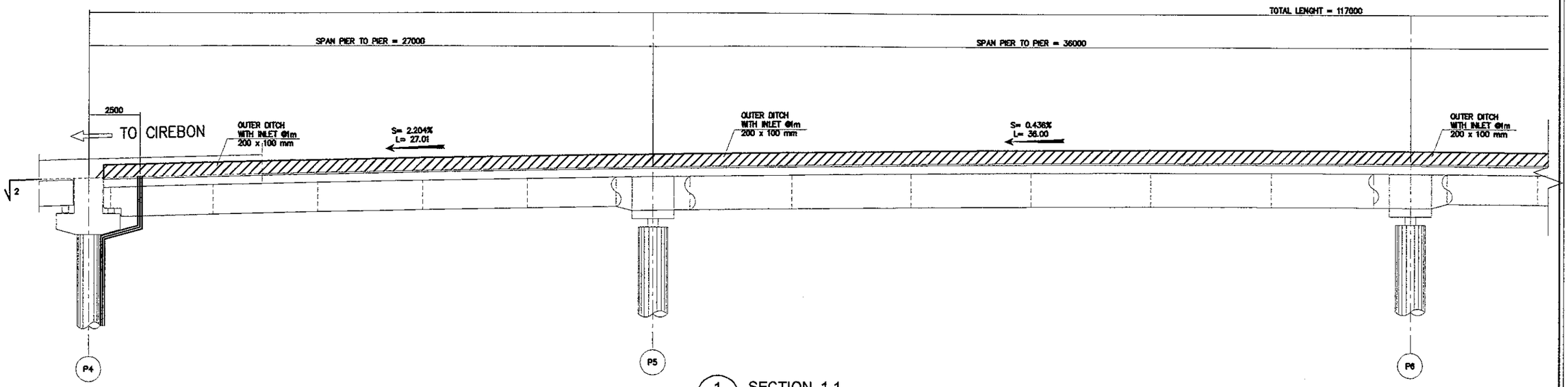

1 / - SECTION 1-1
SCALE : 1 : 200

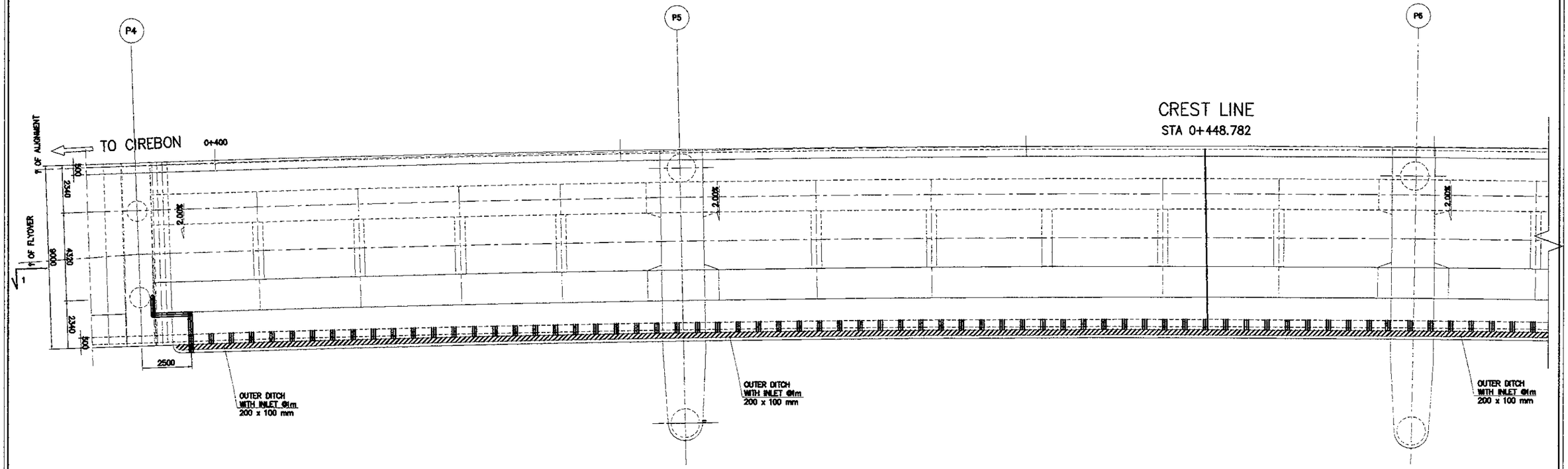

2 / - SECTION 2-2
SCALE : 1 : 200

PRINTED: OCT. 19, 2006

JAPAN INTERNATIONAL COOPERATION AGENCY KATAHIRA & ENGINEERS INTERNATIONAL	DESIGNED BY	CHECKED BY	SUBMITTED BY	REPUBLIC OF INDONESIA MINISTRY OF PUBLIC WORKS DIRECTORATE GENERAL OF HIGHWAYS	PROJECT AND LOCATION :	SCALE :	DRAWING TITLE :	DRAWING NO :
	Name R. UENO	Name T. OKUMURA	Name M. KIUCHI		DETAILED DESIGN STUDY OF NORTH JAVA CORRIDOR FLYOVER PROJECT GEBANG FLYOVER - CONTRACT PACKAGE 2 (NAGREG - GEBANG) WEST JAVA PROVINCE	1 : 200	DRAINAGE PLAN AND ELEVATION AT VIADUCT 4 OF 8	GDV-006
	Sign	Sign	Sign	APPROVED BY Ir. HERRY VAZA M,Eng.Sc NIP. : 110038400 Sign				SHEET NO :
	Date	Date	Date	Date		FULL SIZE A3		06 / 43

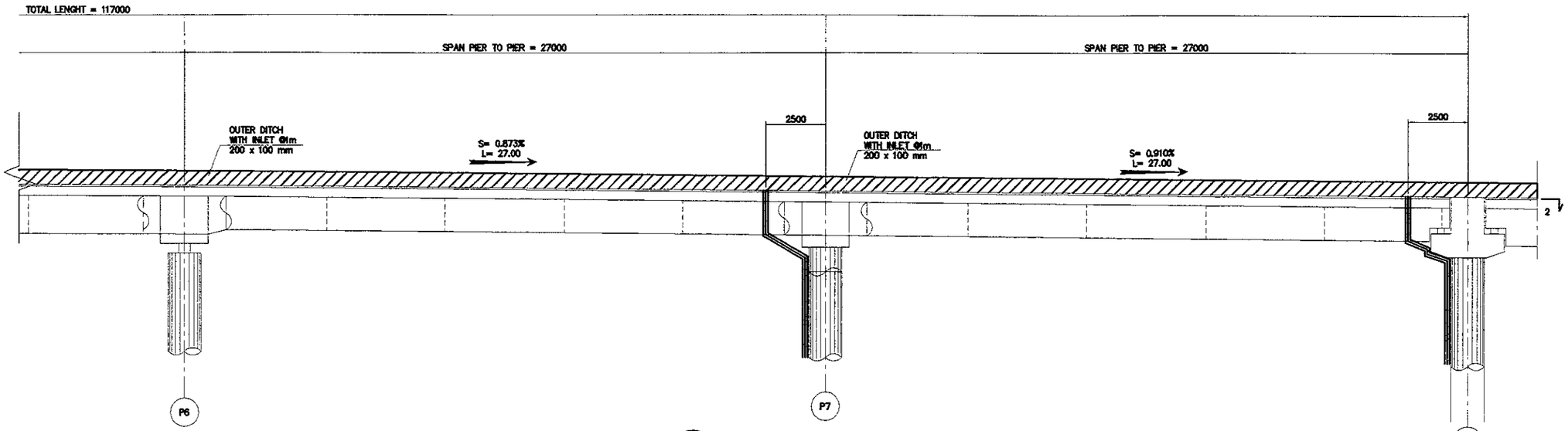

1 / - SECTION 1-1
SCALE : 1 : 200

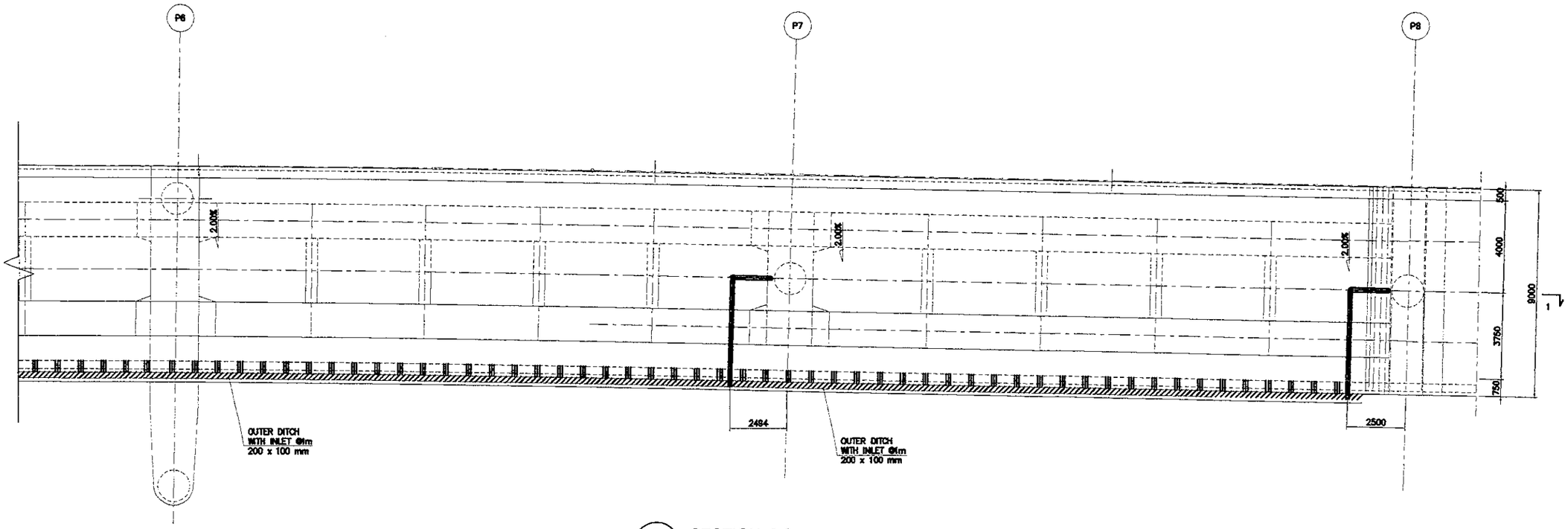

2 / - SECTION 2-2
SCALE : 1 : 200

PRINTED: OCT. 19, 2006

JAPAN INTERNATIONAL COOPERATION AGENCY KATAHIRA & ENGINEERS INTERNATIONAL	DESIGNED BY		CHECKED BY		SUBMITTED BY		REPUBLIC OF INDONESIA MINISTRY OF PUBLIC WORKS DIRECTORATE GENERAL OF HIGHWAYS				PROJECT AND LOCATION :	SCALE :	DRAWING TITLE :	DRAWING NO :
	Name	R. UENO	Name	T. OKUMURA	Name	M. KIUCHI					DETAILED DESIGN STUDY OF NORTH JAVA CORRIDOR FLYOVER PROJECT GEBANG FLYOVER - CONTRACT PACKAGE 2 (NAGREG - GEBANG) WEST JAVA PROVINCE	1 : 200	DRAINAGE PLAN AND ELEVATION AT VIADUCT 5 OF 8	GDV-007
	Sign		Sign		Sign		APPROVED BY	Ir. HERRY VAZA M,Eng.Sc	Sign					SHEET NO :
	Date		Date		Date			NIP. : 110038400	Date			FULL SIZE A3		07 / 43

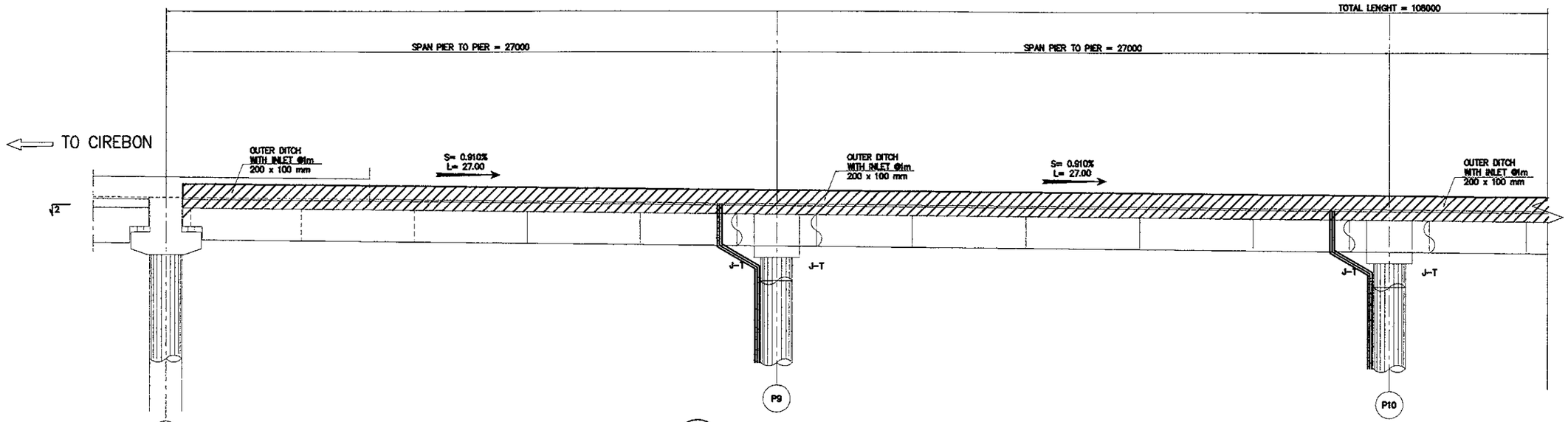

1 / - SECTION 1-1
SCALE : 1 : 200

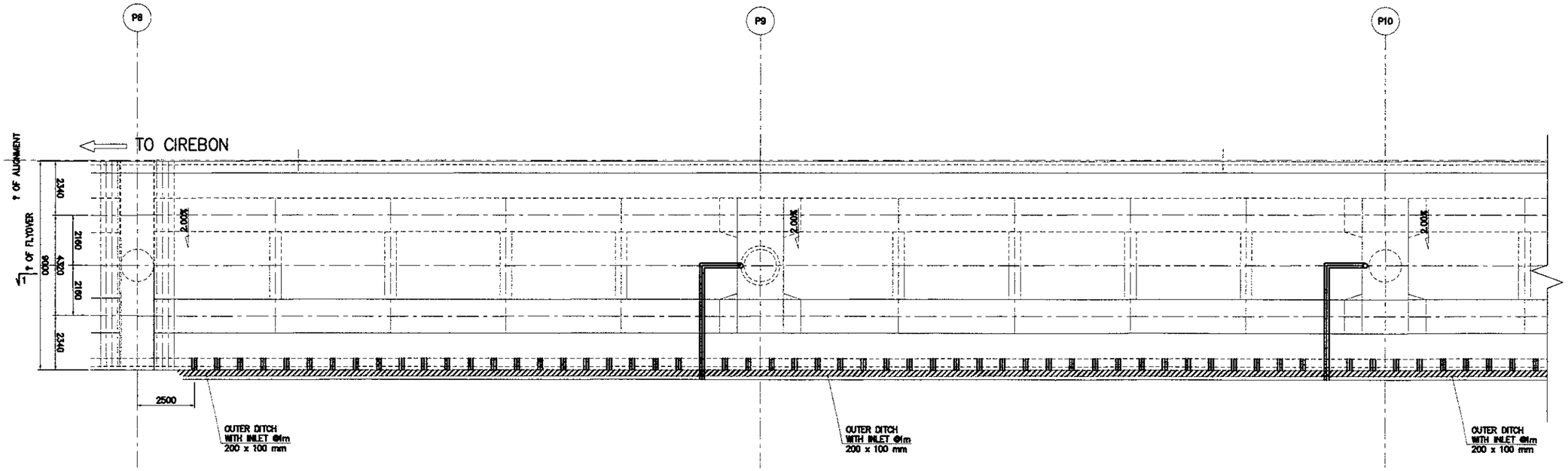

2 / - SECTION 2-2
SCALE : 1 : 200

PRINTED: OCT. 19, 2006

JAPAN INTERNATIONAL COOPERATION AGENCY KATAHIRA & ENGINEERS INTERNATIONAL	DESIGNED BY	CHECKED BY	SUBMITTED BY	REPUBLIC OF INDONESIA MINISTRY OF PUBLIC WORKS DIRECTORATE GENERAL OF HIGHWAYS	PROJECT AND LOCATION :	SCALE :	DRAWING TITLE :	DRAWING NO :
	Name: R. UENO	Name: T. OKUMURA	Name: M. KIUCHI		DETAILED DESIGN STUDY OF NORTH JAVA CORRIDOR FLYOVER PROJECT GEBANG FLYOVER - CONTRACT PACKAGE 2 (NAGREG - GEBANG) WEST JAVA PROVINCE	1 : 200	DRAINAGE PLAN AND ELEVATION AT VIADUCT 6 OF 8	GDV-008
	Sign	Sign	Sign	APPROVED BY: Ir. HERRY VAZA M,Eng.Sc NIP. : 110036400				SHEET NO :
	Date	Date	Date	Sign / Date		FULL SIZE A3		08 / 43

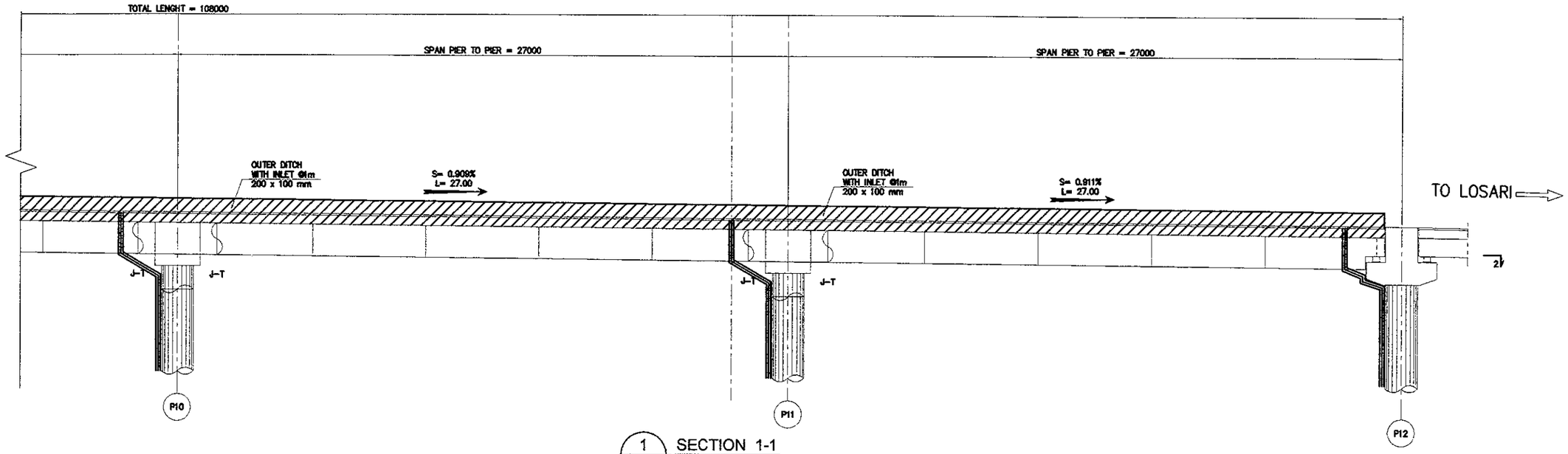

1 SECTION 1-1
SCALE : 1 : 200

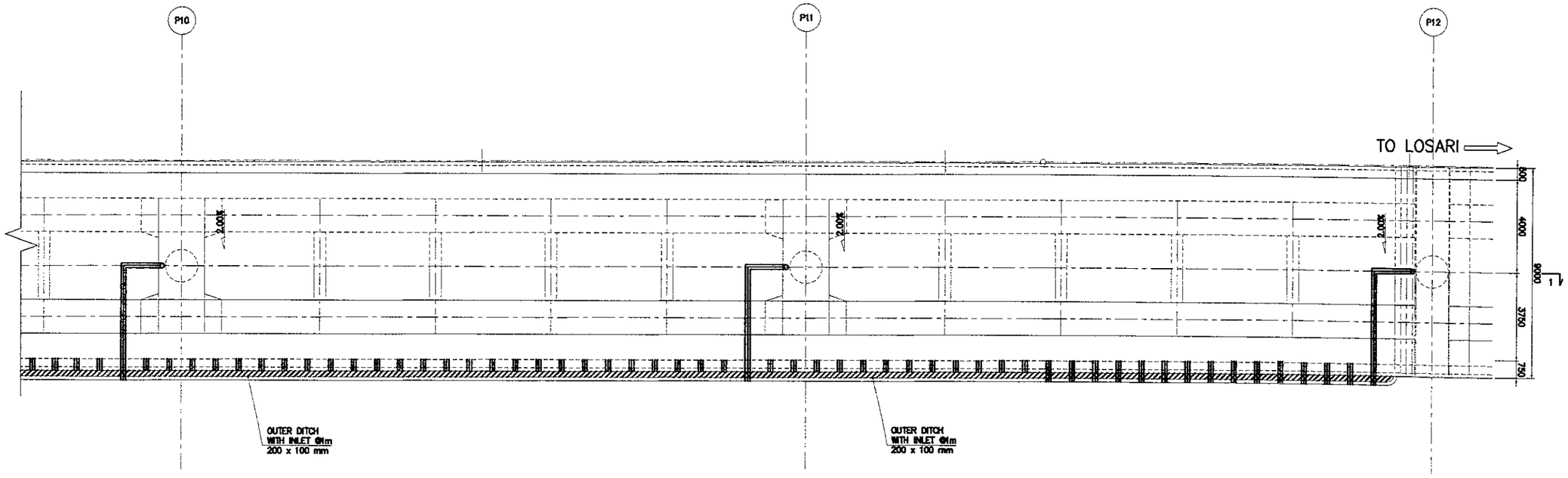

2 SECTION 2-2
SCALE : 1 : 200

PRINTED: OCT. 19, 2006

JAPAN INTERNATIONAL COOPERATION AGENCY KATAHIRA & ENGINEERS INTERNATIONAL	DESIGNED BY	CHECKED BY	SUBMITTED BY	REPUBLIC OF INDONESIA MINISTRY OF PUBLIC WORKS DIRECTORATE GENERAL OF HIGHWAYS	PROJECT AND LOCATION :	SCALE :	DRAWING TITLE :	DRAWING NO :
	Name R. UENO	Name T. OKUMURA	Name M. KIUCHI		DETAILED DESIGN STUDY OF NORTH JAVA CORRIDOR FLYOVER PROJECT GEBANG FLYOVER - CONTRACT PACKAGE 2 (NAGREG - GEBANG) WEST JAVA PROVINCE	1 : 200	DRAINAGE PLAN AND ELEVATION AT VIADUCT 7 OF 8	GDV-009
	Sign	Sign	Sign	APPROVED BY Ir. HERRY VAZA M,Eng.Sc NIP. : 110038400 Sign				SHEET NO :
	Date	Date	Date	Date		FULL SIZE A3		09 / 43

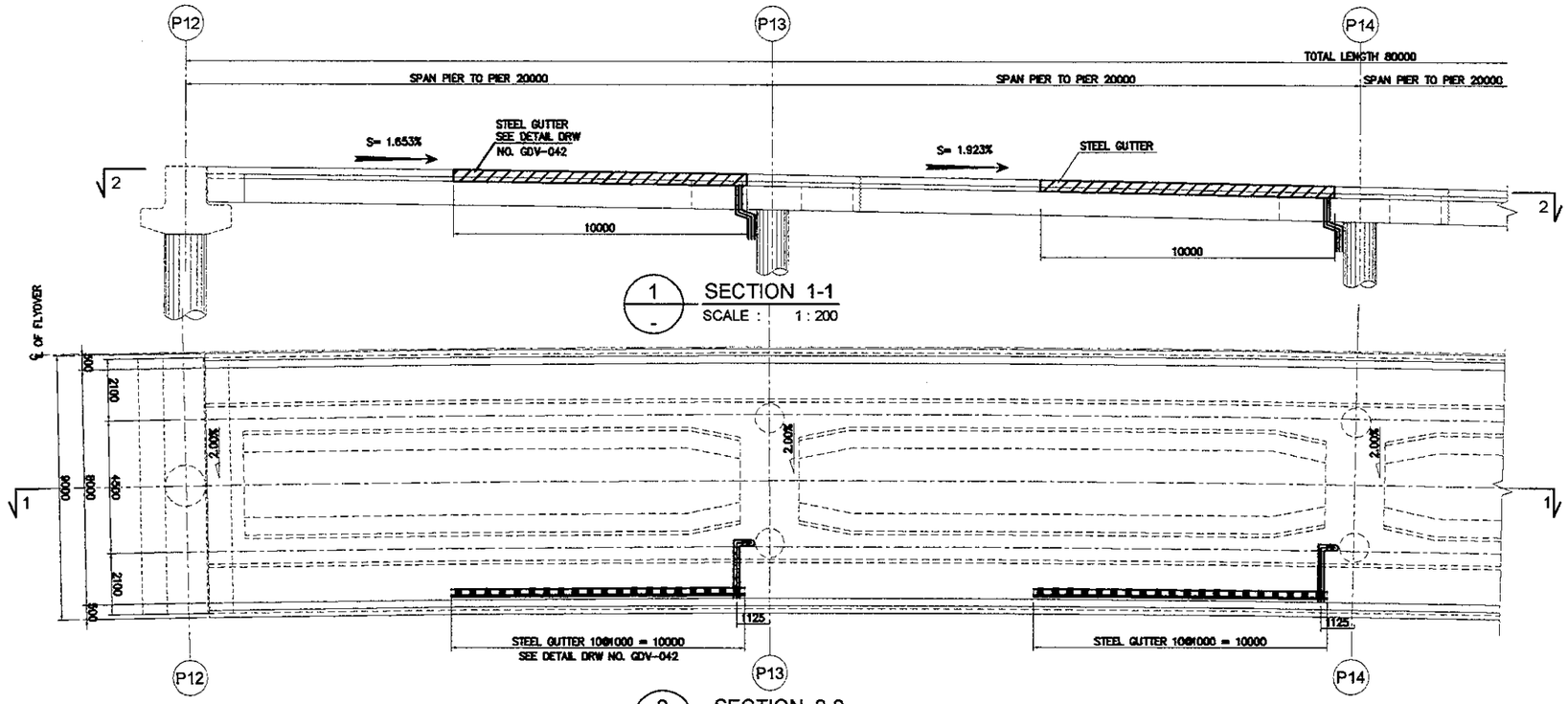

PRINTED: OCT. 19, 2006

JAPAN INTERNATIONAL COOPERATION AGENCY KATAHIRA & ENGINEERS INTERNATIONAL	DESIGNED BY	CHECKED BY	SUBMITTED BY	REPUBLIC OF INDONESIA MINISTRY OF PUBLIC WORKS DIRECTORATE GENERAL OF HIGHWAYS	PROJECT AND LOCATION :	SCALE :	DRAWING TITLE :	DRAWING NO :
	Name R. UENO	Name T. OKUMURA	Name M. KIUCHI		DETAILED DESIGN STUDY OF NORTH JAVA CORRIDOR FLYOVER PROJECT GEBANG FLYOVER - CONTRACT PACKAGE 2 (NAGREG - GEBANG) WEST JAVA PROVINCE	1 : 200	DRAINAGE PLAN AND ELEVATION AT VIADUCT 8 OF 8	GDV-010
	Sign	Sign	Sign	APPROVED BY Ir. HERRY VAZA M,Eng.Sc NIP. : 110038400 Sign				SHEET NO :
	Date	Date	Date	Date		FULL SIZE A3		10 / 43

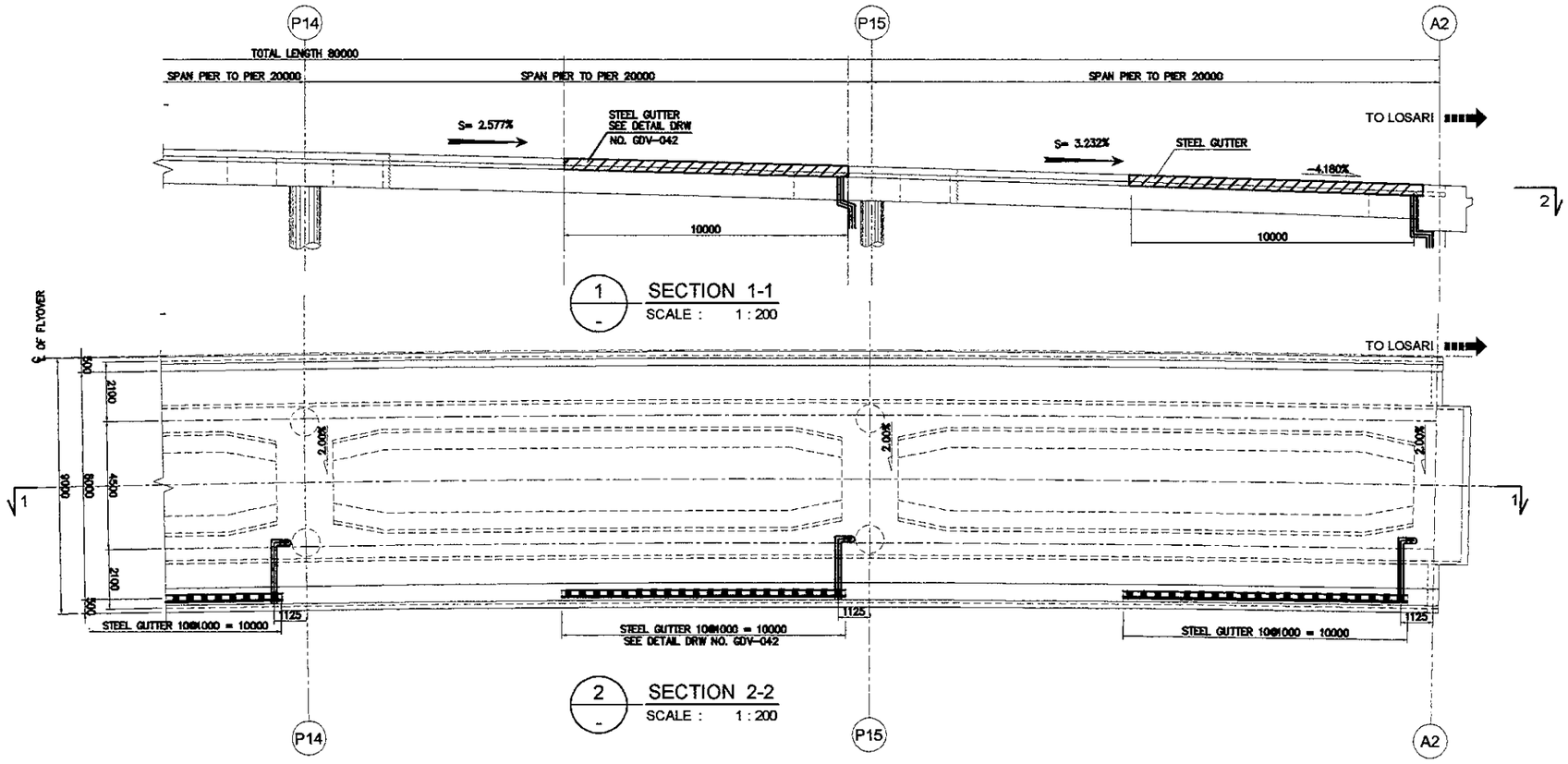

PRINTED: OCT. 19, 2006

JAPAN INTERNATIONAL COOPERATION AGENCY KATAHIRA & ENGINEERS INTERNATIONAL	DESIGNED BY	CHECKED BY	SUBMITTED BY	REPUBLIC OF INDONESIA MINISTRY OF PUBLIC WORKS DIRECTORATE GENERAL OF HIGHWAYS	PROJECT AND LOCATION :	SCALE :	DRAWING TITLE :	DRAWING NO :
	Name R. UENO	Name T. OKUMURA	Name M. KIUCHI		DETAILED DESIGN STUDY OF NORTH JAVA CORRIDOR FLYOVER PROJECT GEBANG FLYOVER - CONTRACT PACKAGE 2 (NAGREG - GEBANG) WEST JAVA PROVINCE	1 : 400	DRAINAGE LAYOUT PLAN UNDER VIADUCT AT GRADE LEVEL 1 OF 3	GDV-011
	Sign	Sign	Sign	APPROVED BY Ir. HERRY VAZA M,Eng.Sc / NIP. : 110038400 / Sign				SHEET NO :
	Date	Date	Date	Date		FULL SIZE A3		11 / 43

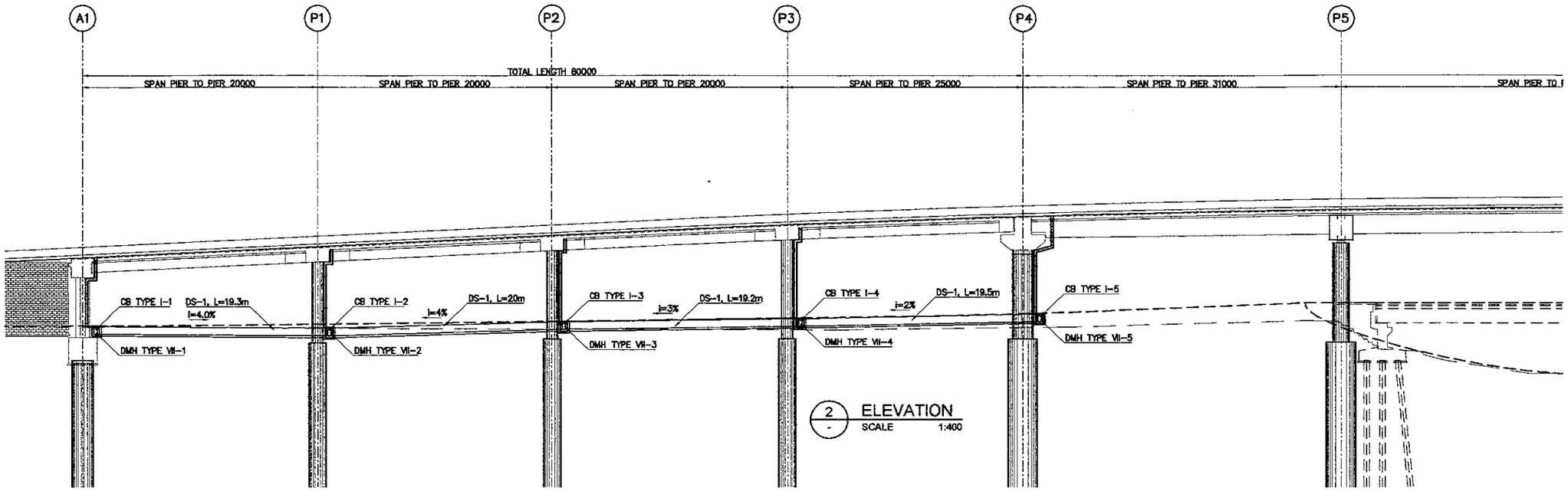

2 ELEVATION
SCALE 1:400

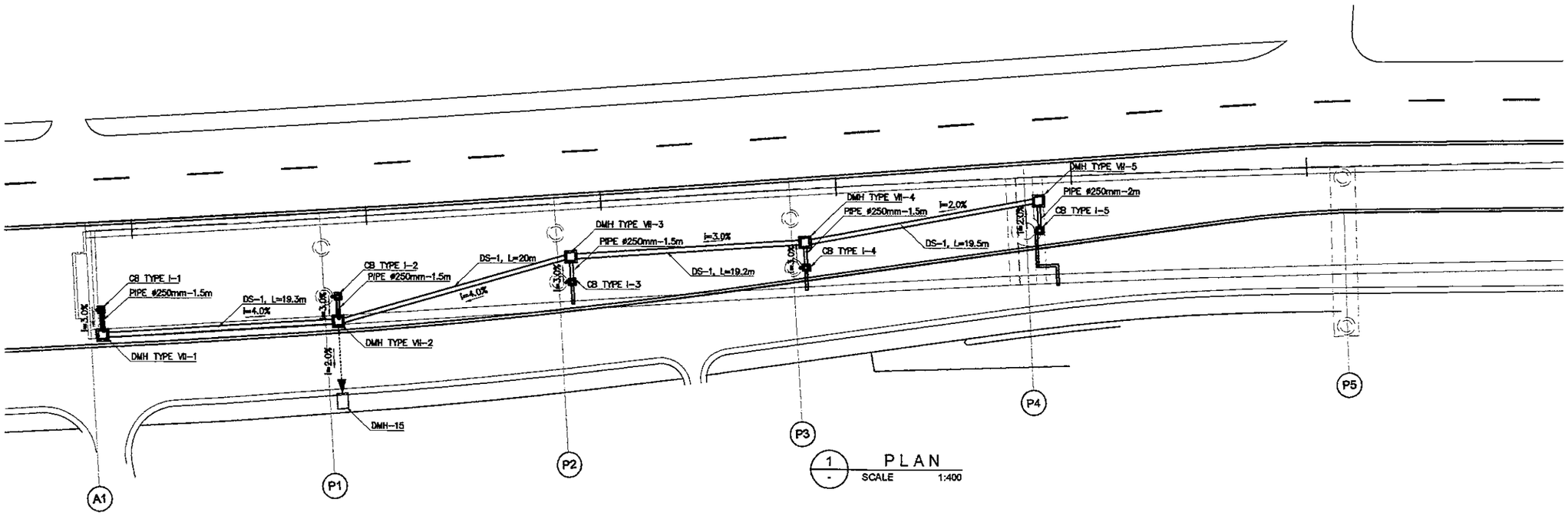

1 PLAN
SCALE 1:400

PRINTED: OCT. 19, 2006

JAPAN INTERNATIONAL COOPERATION AGENCY KATAHIRA & ENGINEERS INTERNATIONAL	DESIGNED BY	CHECKED BY	SUBMITTED BY	REPUBLIC OF INDONESIA MINISTRY OF PUBLIC WORKS DIRECTORATE GENERAL OF HIGHWAYS	PROJECT AND LOCATION :	SCALE :	DRAWING TITLE :	DRAWING NO :
	Name R. UENO	Name T. OKUMURA	Name M. KIUCHI		DETAILED DESIGN STUDY OF NORTH JAVA CORRIDOR FLYOVER PROJECT GEBANG FLYOVER - CONTRACT PACKAGE 2 (NAGREG - GEBANG) WEST JAVA PROVINCE	1 : 400	DRAINAGE LAYOUT PLAN UNDER VIADUCT AT GRADE LEVEL 2 OF 3	GDV-012
	Sign	Sign	Sign	APPROVED BY Ir. HERRY VAZA M,Eng.Sc NIP. : 110038400 Sign				SHEET NO :
	Date	Date	Date	Date		FULL SIZE A3		12 / 43

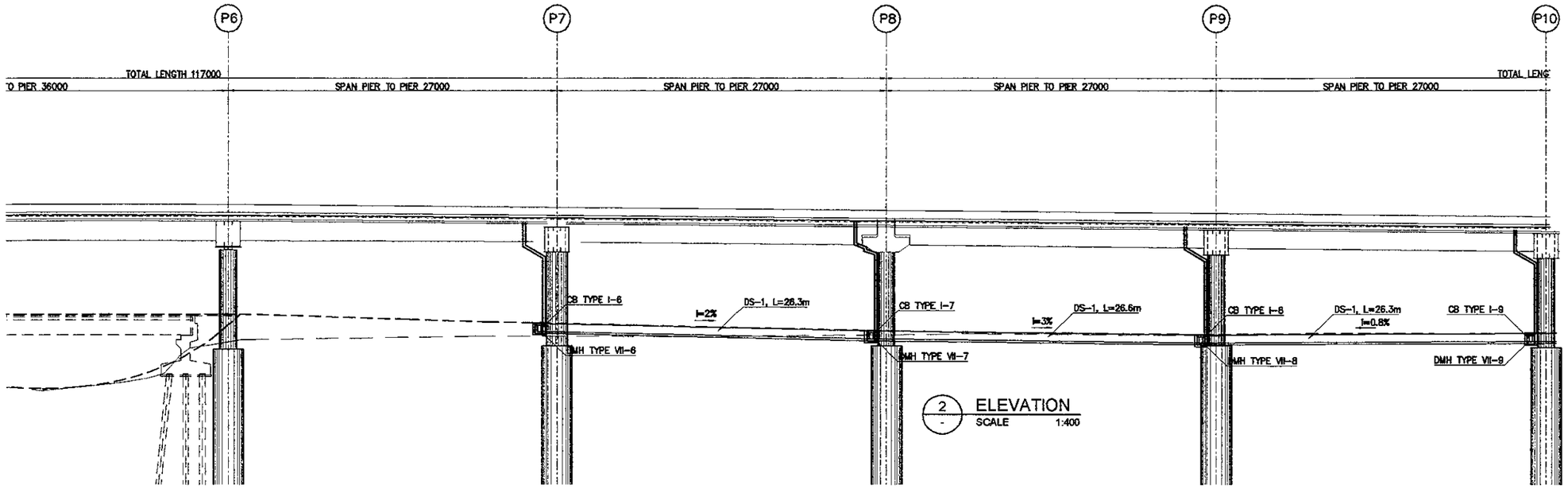

2 ELEVATION
SCALE 1:400

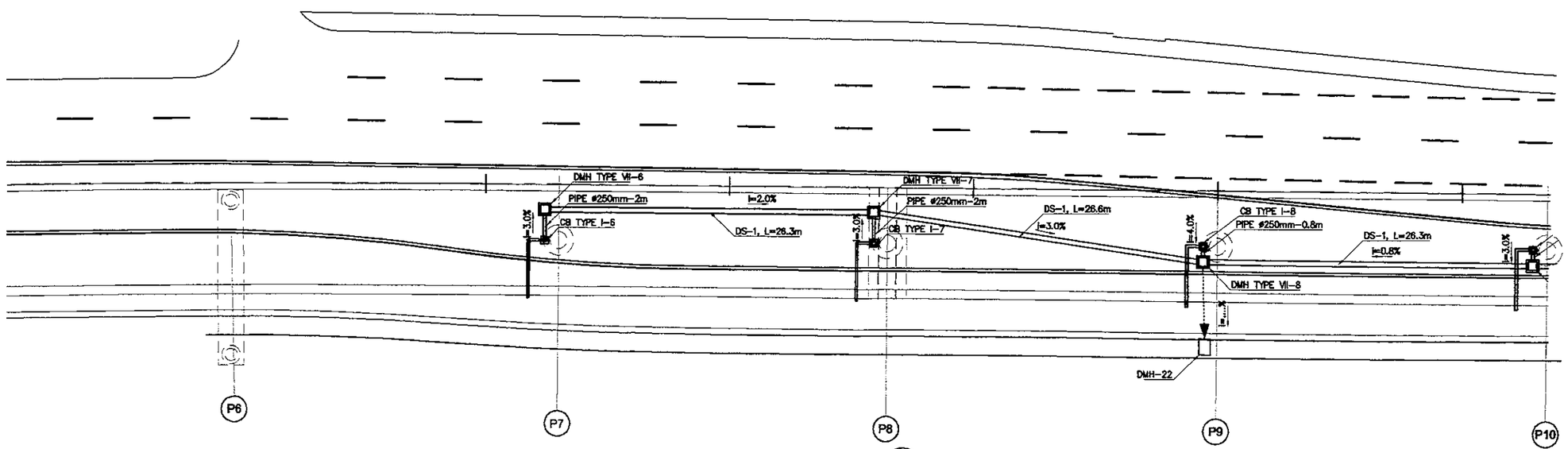

1 PLAN
SCALE 1:400

PRINTED: OCT. 19, 2006

JAPAN INTERNATIONAL COOPERATION AGENCY KATAHIRA & ENGINEERS INTERNATIONAL	DESIGNED BY		CHECKED BY		SUBMITTED BY		REPUBLIC OF INDONESIA MINISTRY OF PUBLIC WORKS DIRECTORATE GENERAL OF HIGHWAYS			PROJECT AND LOCATION :	SCALE :	DRAWING TITLE :	DRAWING NO :
	Name	R. UENO	Name	T. OKUMURA	Name	M. KIUCHI				DETAILED DESIGN STUDY OF NORTH JAVA CORRIDOR FLYOVER PROJECT GEBANG FLYOVER - CONTRACT PACKAGE 2 (NAGREG - GEBANG) WEST JAVA PROVINCE	1 : 400	DRAINAGE LAYOUT PLAN UNDER VIADUCT AT GRADE LEVEL 3 OF 3	GDV-013
	Sign		Sign		Sign		APPROVED BY	Ir. HERRY VAZA M,Eng.Sc	Sign				SHEET NO :
	Date		Date		Date			NIP. : 110038400	Date		FULL SIZE A3		13 / 43

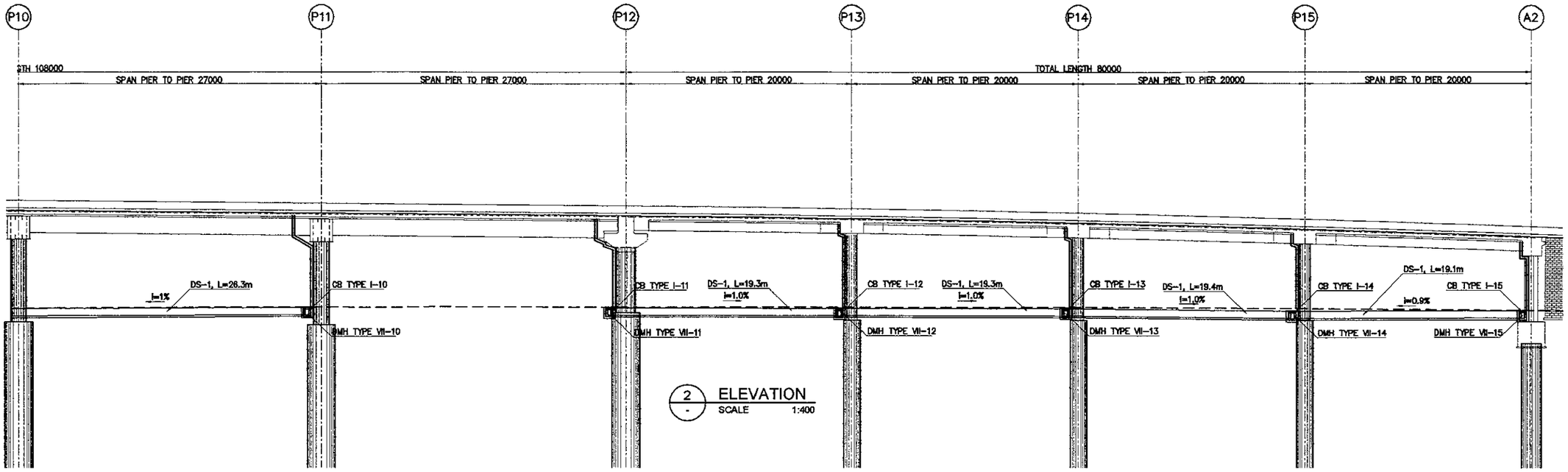

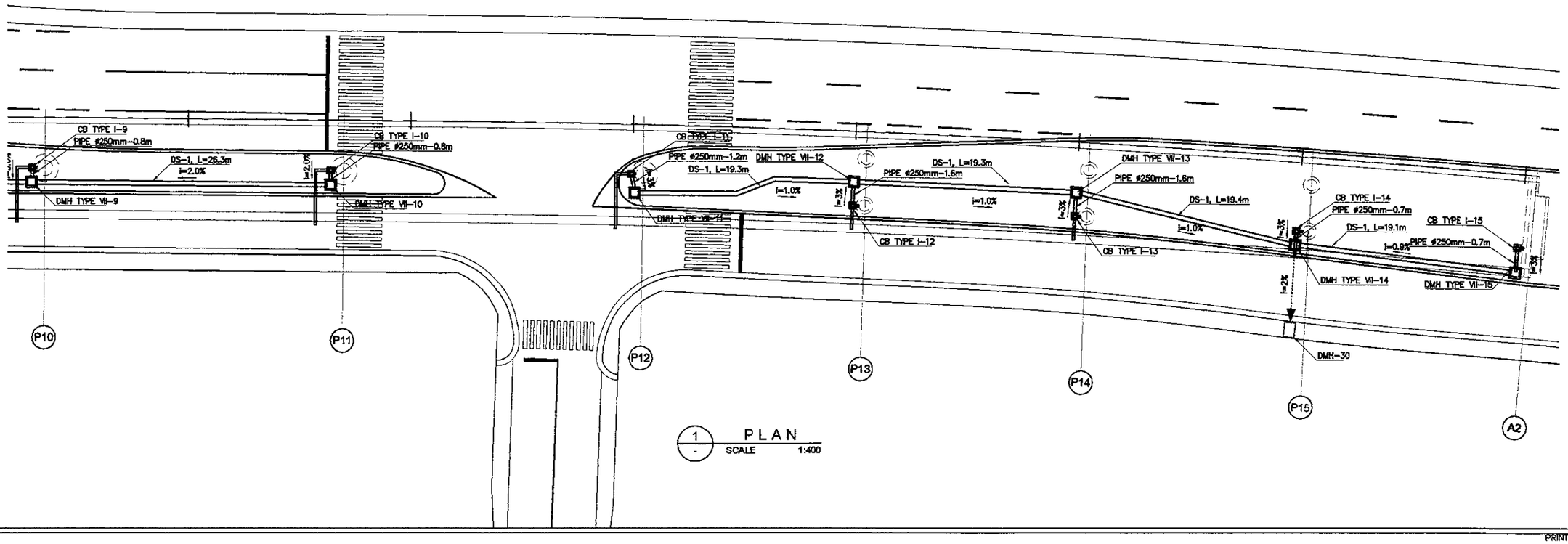

PRINTED: OCT. 19, 2006

JAPAN INTERNATIONAL COOPERATION AGENCY KATAHIRA & ENGINEERS INTERNATIONAL	DESIGNED BY	CHECKED BY	SUBMITTED BY	REPUBLIC OF INDONESIA MINISTRY OF PUBLIC WORKS DIRECTORATE GENERAL OF HIGHWAYS	PROJECT AND LOCATION :	SCALE :	DRAWING TITLE :	DRAWING NO :
	Name: R. UENO	Name: T. OKUMURA	Name: M. KIUCHI		DETAILED DESIGN STUDY OF NORTH JAVA CORRIDOR FLYOVER PROJECT GEBANG FLYOVER - CONTRACT PACKAGE 2 (NAGREG - GEBANG) WEST JAVA PROVINCE	1 : 100	ABUTMENT AND PIER SECTIONS SHOWING DOWNSPOUT PIPE 1 OF 17	GDV-014
	Sign	Sign	Sign	APPROVED BY: Ir. HERRY VAZA M,Eng.Sc NIP. : 110038400				SHEET NO : 14 / 43
	Date	Date	Date	Sign / Date		FULL SIZE A3		

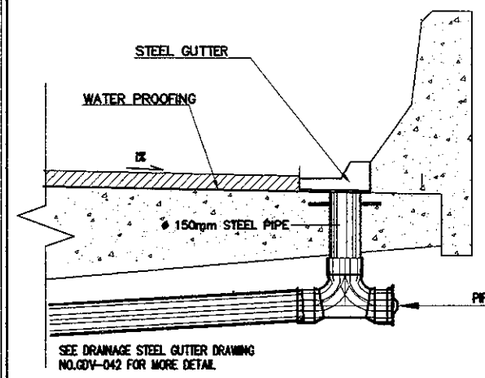

DETAIL OF STEEL GUTTER
1:300

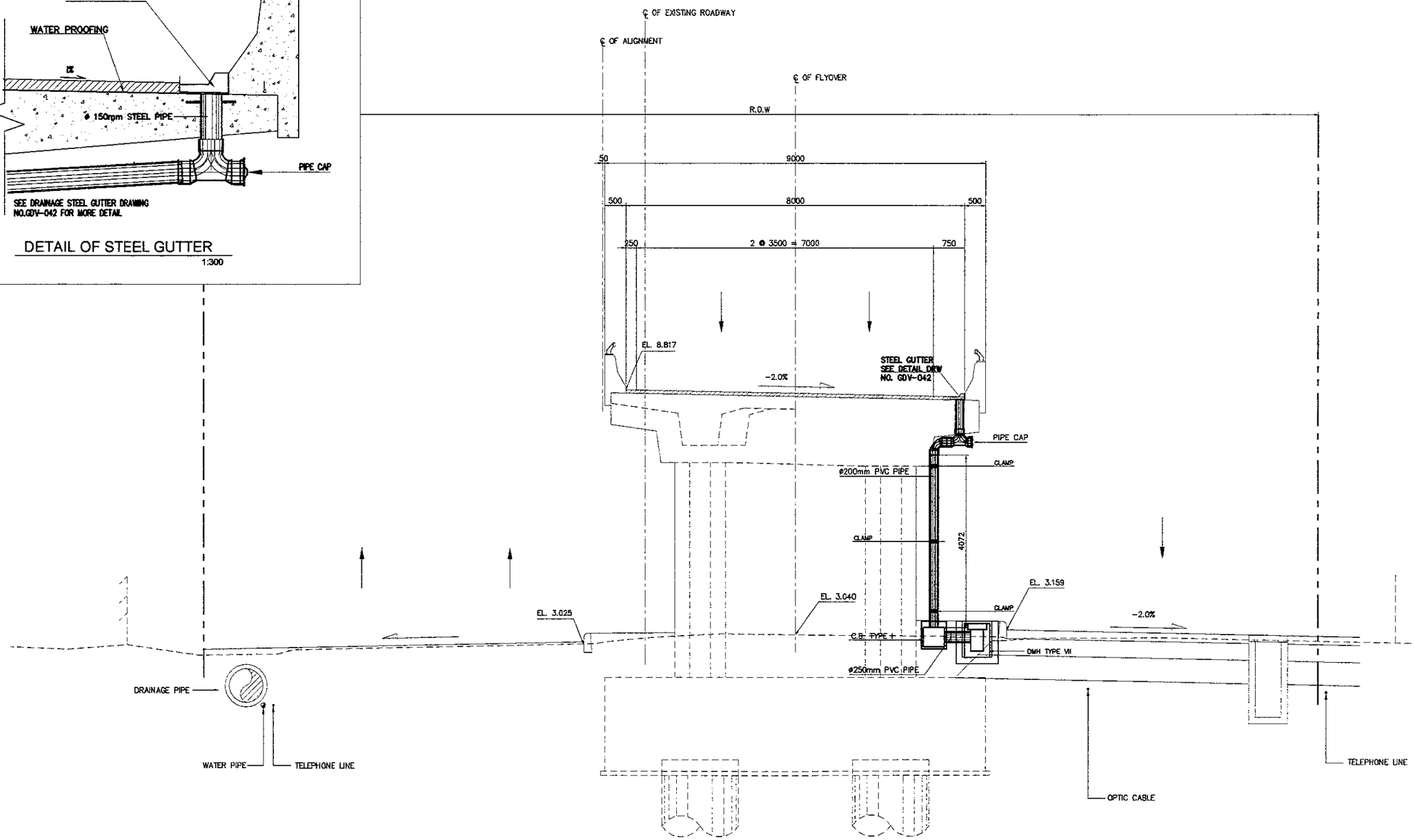

1 / - A1 SECTION (STA. 0 + 316.00)
SCALE 1:100

PRINTED: OCT. 19, 2006

JAPAN INTERNATIONAL COOPERATION AGENCY KATAHIRA & ENGINEERS INTERNATIONAL	DESIGNED BY	CHECKED BY	SUBMITTED BY	REPUBLIC OF INDONESIA MINISTRY OF PUBLIC WORKS DIRECTORATE GENERAL OF HIGHWAYS	PROJECT AND LOCATION :	SCALE :	DRAWING TITLE :	DRAWING NO :
	Name: R. UENO	Name: T. OKUMURA	Name: M. KIUCHI		DETAILED DESIGN STUDY OF NORTH JAVA CORRIDOR FLYOVER PROJECT GEBANG FLYOVER - CONTRACT PACKAGE 2 (NAGREG - GEBANG) WEST JAVA PROVINCE	1 : 100	ABUTMENT AND PIER SECTIONS SHOWING DOWNSPOUT PIPE 2 OF 17	GDV-015
	Sign	Sign	Sign	APPROVED BY: Ir. HERRY VAZA M,Eng.Sc NIP. : 110038400		FULL SIZE A3		SHEET NO : 15 / 43
	Date	Date	Date	Sign / Date				

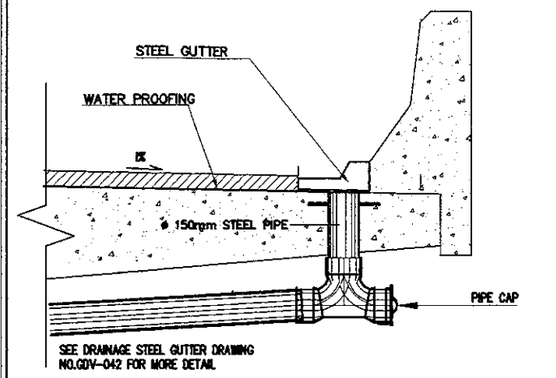

DETAIL OF STEEL GUTTER
1:300

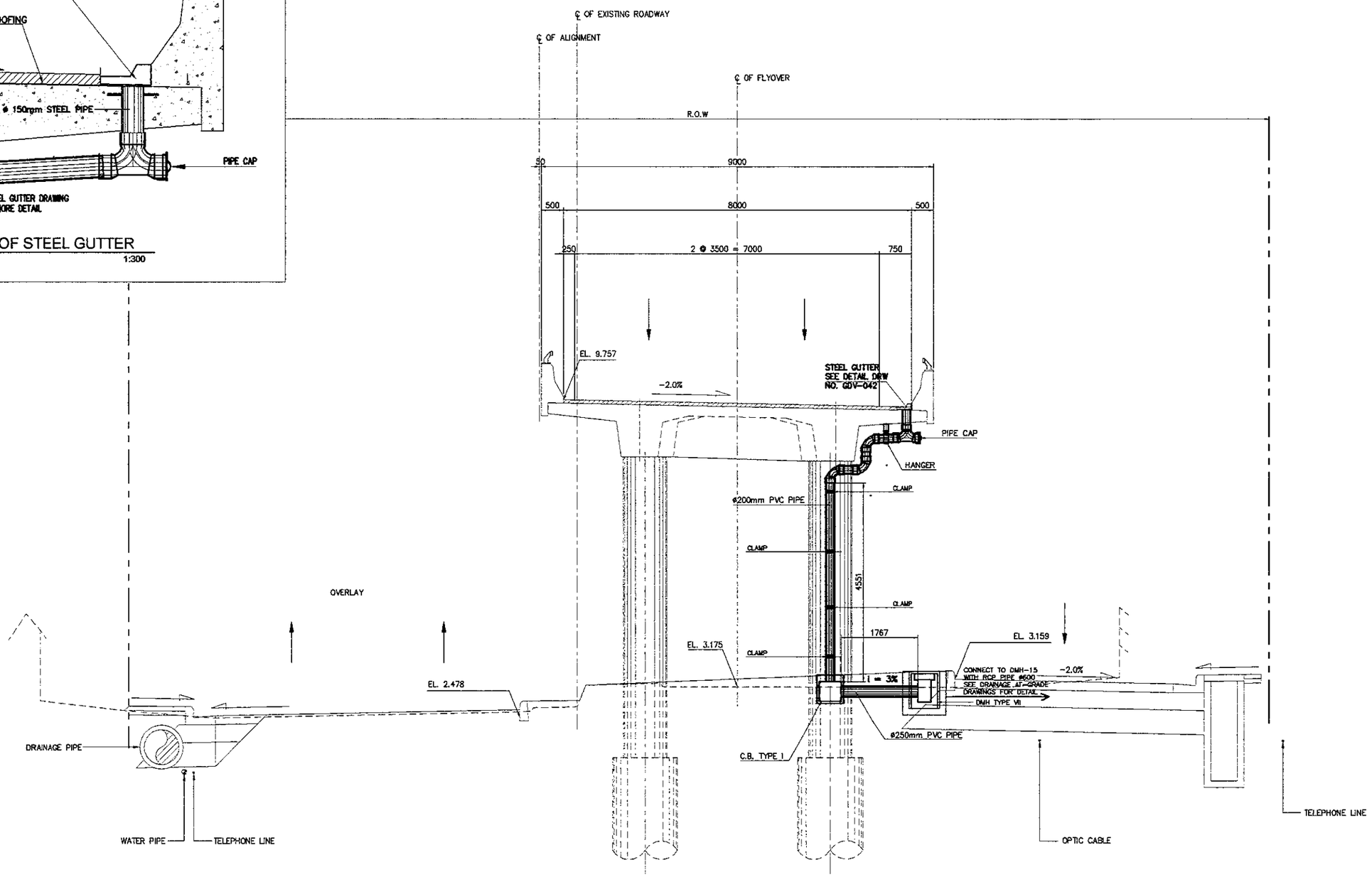

1 / - P1 SECTION (STA. 0 + 336.00)
SCALE 1:100

PRINTED: OCT. 19, 2006

JAPAN INTERNATIONAL COOPERATION AGENCY KATAHIRA & ENGINEERS INTERNATIONAL	DESIGNED BY	CHECKED BY	SUBMITTED BY	REPUBLIC OF INDONESIA MINISTRY OF PUBLIC WORKS DIRECTORATE GENERAL OF HIGHWAYS	PROJECT AND LOCATION :	SCALE :	DRAWING TITLE :	DRAWING NO :
	Name R. UENO	Name T. OKUMURA	Name M. KIUCHI		DETAILED DESIGN STUDY OF NORTH JAVA CORRIDOR FLYOVER PROJECT GEBANG FLYOVER - CONTRACT PACKAGE 2 (NAGREG - GEBANG) WEST JAVA PROVINCE	1 : 100	ABUTMENT AND PIER SECTIONS SHOWING DOWNSPOUT PIPE 3 OF 17	GDV-016
	Sign	Sign	Sign	APPROVED BY ir. HERRY VAZA M.Eng.Sc NIP. : 110038400 Sign				SHEET NO :
	Date	Date	Date	Date		FULL SIZE A3		16 / 43

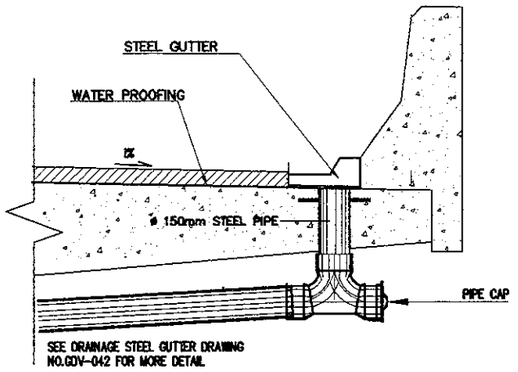

DETAIL OF STEEL GUTTER
1:300

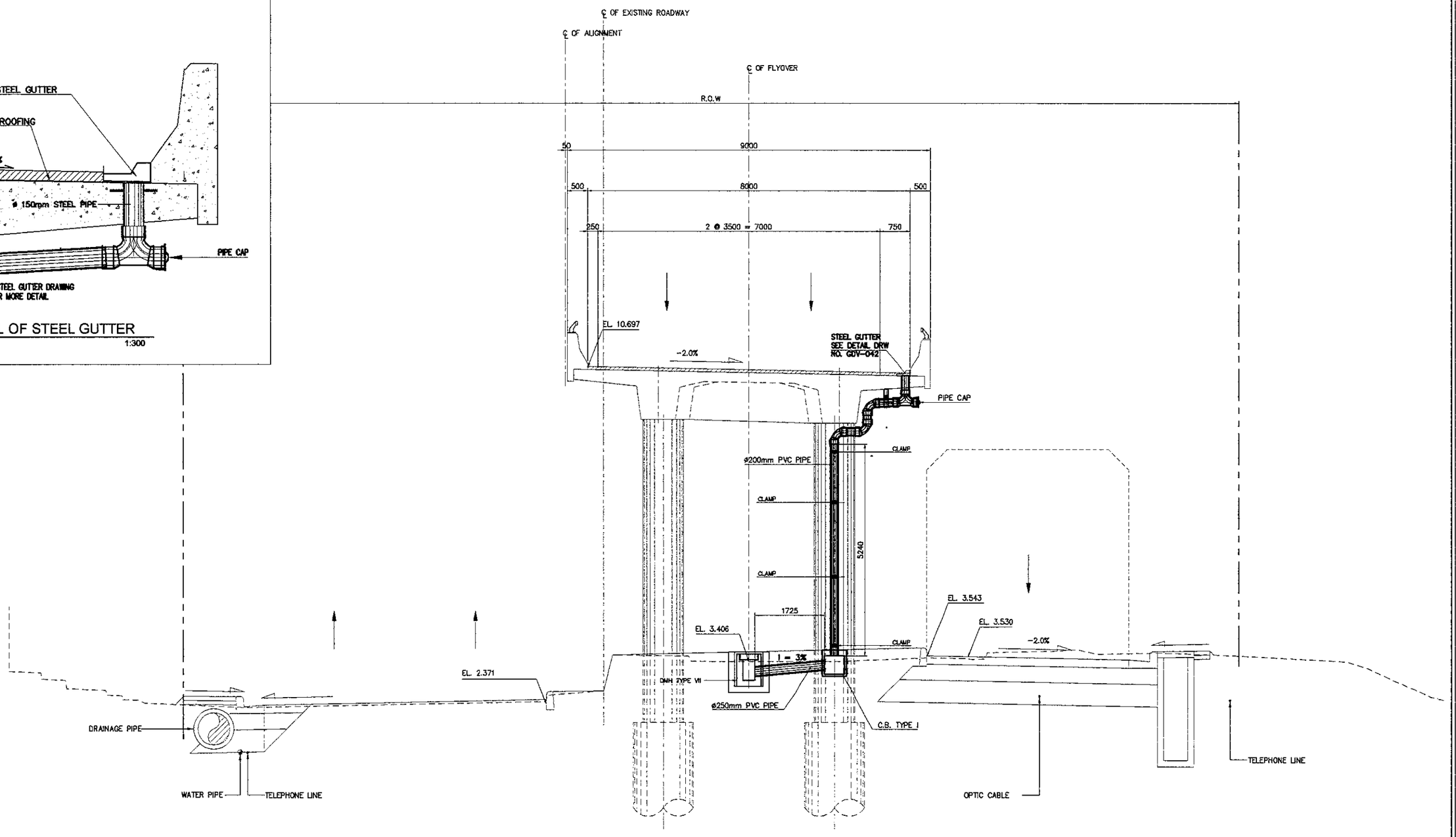

1 / - P2 SECTION (STA. 0 + 356.00)
SCALE 1:100

PRINTED: OCT. 19, 2006

JAPAN INTERNATIONAL COOPERATION AGENCY KATAHIRA & ENGINEERS INTERNATIONAL	DESIGNED BY	CHECKED BY	SUBMITTED BY	REPUBLIC OF INDONESIA MINISTRY OF PUBLIC WORKS DIRECTORATE GENERAL OF HIGHWAYS	PROJECT AND LOCATION :	SCALE :	DRAWING TITLE :	DRAWING NO :
	Name R. UENO	Name T. OKUMURA	Name M. KIUCHI		DETAILED DESIGN STUDY OF NORTH JAVA CORRIDOR FLYOVER PROJECT GEBANG FLYOVER - CONTRACT PACKAGE 2 (NAGREG - GEBANG) WEST JAVA PROVINCE	1 : 100	ABUTMENT AND PIER SECTIONS SHOWING DOWNSPOUT PIPE 4 OF 17	GDV-017
	Sign	Sign	Sign	APPROVED BY ir. HERRY VAZA M,Eng.Sc NIP. : 110038400 Sign				SHEET NO :
	Date	Date	Date	Date		FULL SIZE A3		17 / 43

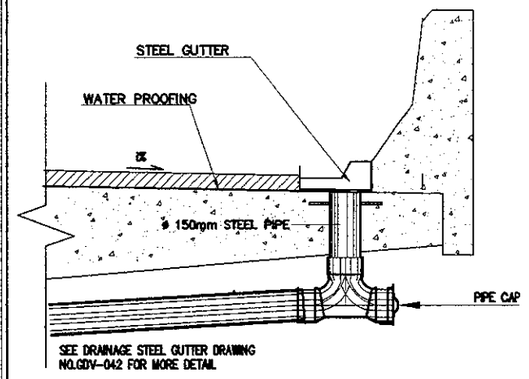

DETAIL OF STEEL GUTTER

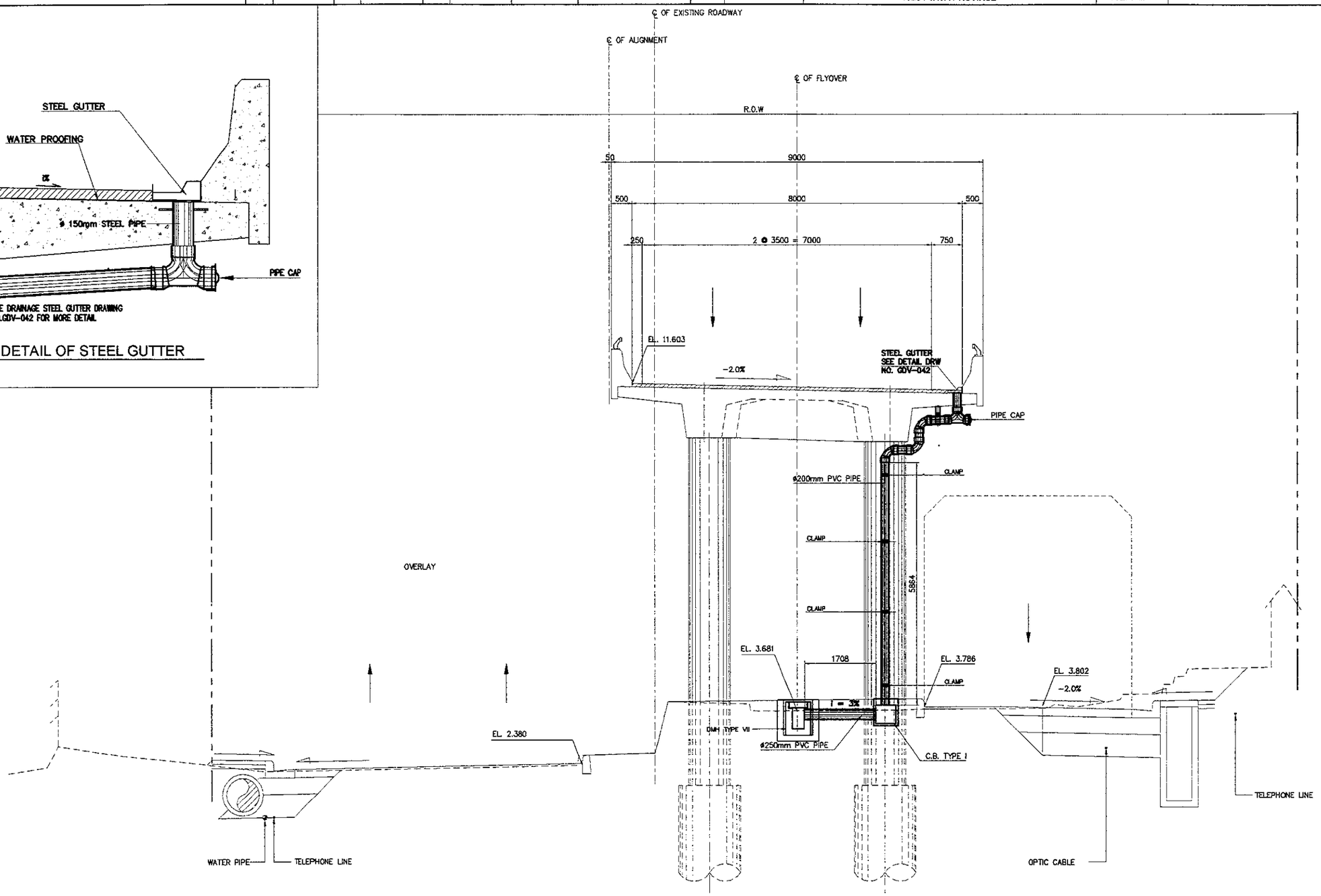

1 / - P3 SECTION (STA. 0 + 376.00)
1:100

PRINTED: OCT. 19, 2006

JAPAN INTERNATIONAL COOPERATION AGENCY KATAHIRA & ENGINEERS INTERNATIONAL	DESIGNED BY	CHECKED BY	SUBMITTED BY	REPUBLIC OF INDONESIA MINISTRY OF PUBLIC WORKS DIRECTORATE GENERAL OF HIGHWAYS	PROJECT AND LOCATION :	SCALE :	DRAWING TITLE :	DRAWING NO :
	Name: R. UENO	Name: T. OKUMURA	Name: M. KIUCHI		DETAILED DESIGN STUDY OF NORTH JAVA CORRIDOR FLYOVER PROJECT GEBANG FLYOVER - CONTRACT PACKAGE 2 (NAGREG - GEBANG) WEST JAVA PROVINCE	1 : 100	ABUTMENT AND PIER SECTIONS SHOWING DOWNSPOUT PIPE 5 OF 17	GDV-018
	Sign	Sign	Sign	APPROVED BY: Ir. HERRY VAZA M.Eng.Sc NIP. : 110038400				SHEET NO :
	Date	Date	Date	Sign / Date		FULL SIZE A3		18 / 43

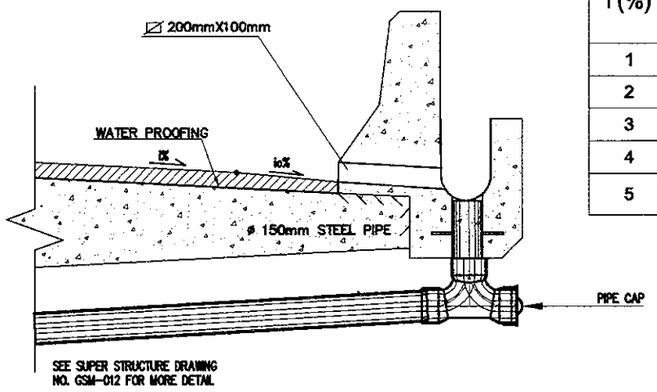

i (%)	io (%)
1	6
2	7
3	8
4	9
5	10

DETAIL OF OUTER DITCH
SCALE 1:300

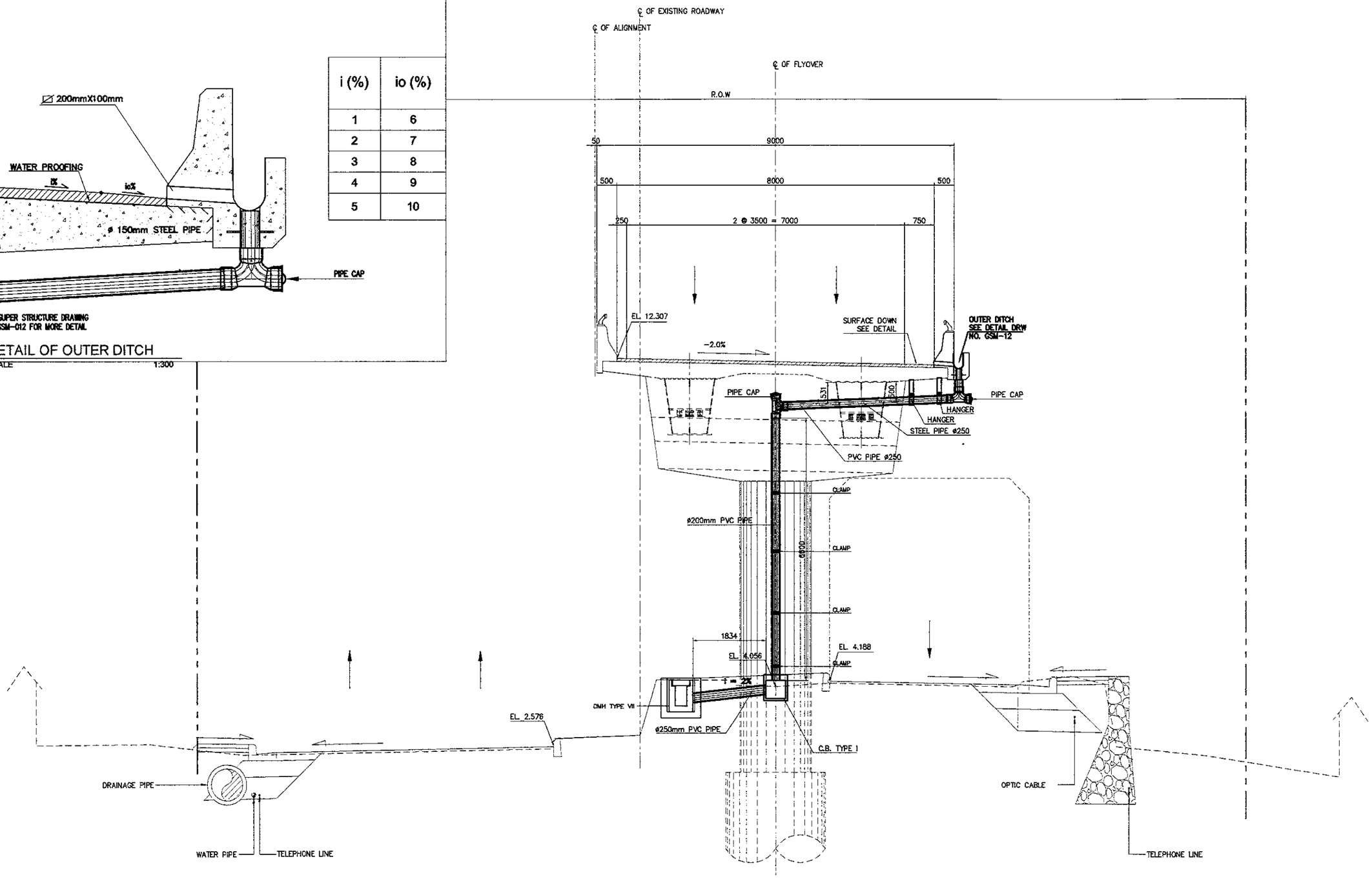

1 / - P4 SECTION (STA. 0 + 396.00)
SCALE 1:100

PRINTED: OCT. 19, 2006

JAPAN INTERNATIONAL COOPERATION AGENCY / KATAHIRA & ENGINEERS INTERNATIONAL	DESIGNED BY	CHECKED BY	SUBMITTED BY	REPUBLIC OF INDONESIA MINISTRY OF PUBLIC WORKS DIRECTORATE GENERAL OF HIGHWAYS	PROJECT AND LOCATION :	SCALE :	DRAWING TITLE :	DRAWING NO :
	Name: R. UENO	Name: T. OKUMURA	Name: M. KIUCHI		DETAILED DESIGN STUDY OF NORTH JAVA CORRIDOR FLYOVER PROJECT GEBANG FLYOVER - CONTRACT PACKAGE 2 (NAGREG - GEBANG) WEST JAVA PROVINCE	1 : 100	ABUTMENT AND PIER SECTIONS SHOWING DOWNSPOUT PIPE 6 OF 17	GDV-019
	Sign	Sign	Sign	APPROVED BY: Ir. HERRY VAZA M,Eng.Sc NIP. : 110038400		FULL SIZE A3		SHEET NO : 19 / 43
	Date	Date	Date	Sign / Date				

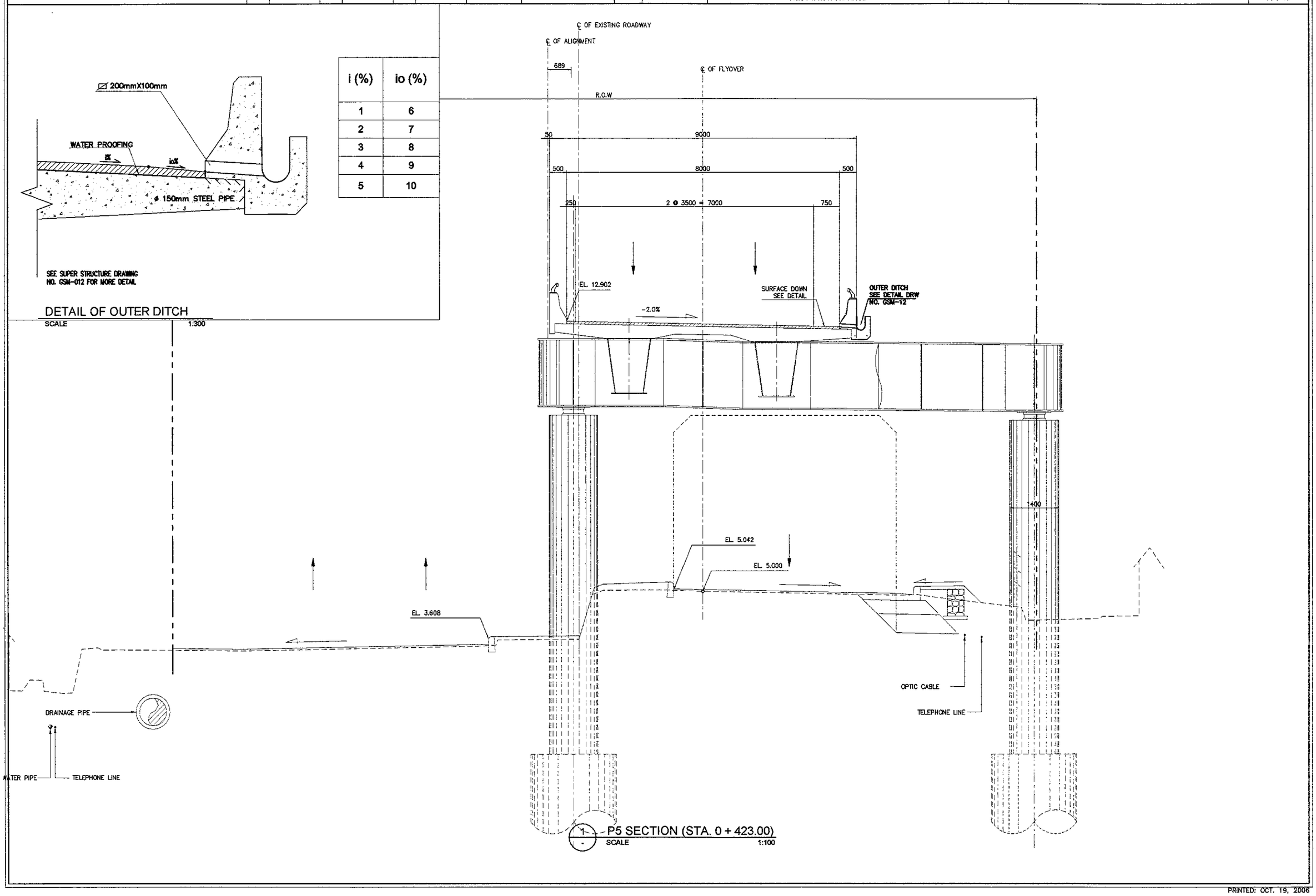

i (%)	io (%)
1	6
2	7
3	8
4	9
5	10

PRINTED: OCT. 19, 2006

JAPAN INTERNATIONAL COOPERATION AGENCY KATAHIRA & ENGINEERS INTERNATIONAL	DESIGNED BY	CHECKED BY	SUBMITTED BY	REPUBLIC OF INDONESIA MINISTRY OF PUBLIC WORKS DIRECTORATE GENERAL OF HIGHWAYS	PROJECT AND LOCATION :	SCALE :	DRAWING TITLE :	DRAWING NO :
	Name: R. UENO	Name: T. OKUMURA	Name: M. KIUCHI		DETAILED DESIGN STUDY OF NORTH JAVA CORRIDOR FLYOVER PROJECT GEBANG FLYOVER - CONTRACT PACKAGE 2 (NAGREG - GEBANG) WEST JAVA PROVINCE	1 : 100	ABUTMENT AND PIER SECTIONS SHOWING DOWNSPOUT PIPE 7 OF 17	GDV-020
	Sign	Sign	Sign	APPROVED BY: Ir. HERRY VAZA M.Eng.Sc NIP. : 110038400				SHEET NO :
	Date	Date	Date	Sign / Date		FULL SIZE A3		20 / 43

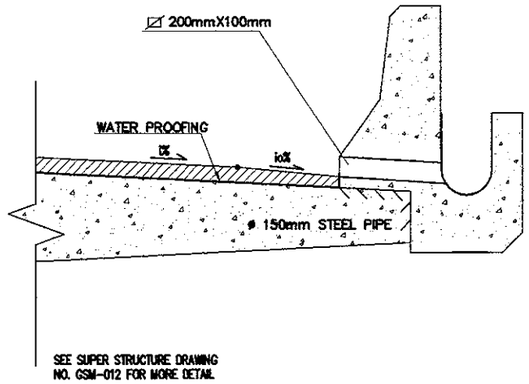

i (%)	io (%)
1	6
2	7
3	8
4	9
5	10

DETAIL OF OUTER DITCH
SCALE 1:300

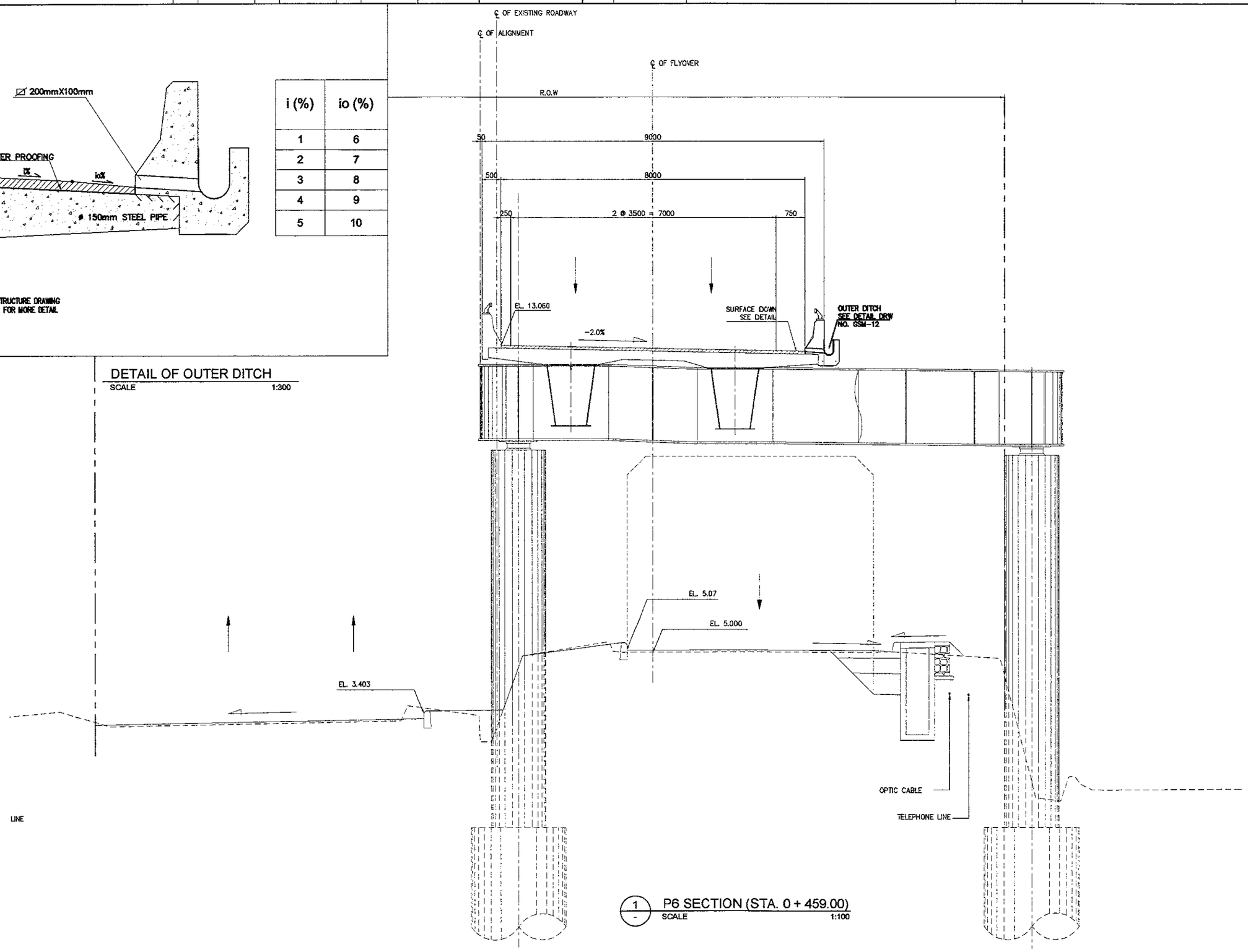

1 P6 SECTION (STA. 0 + 459.00)
SCALE 1:100

PRINTED: OCT. 19, 2006