JAPAN INTERNATIONAL COOPERATION AGENCY KATAHIRA & ENGINEERS INTERNATIONAL	DESIGNED BY	CHECKED BY	SUBMITTED BY	REPUBLIC OF INDONESIA MINISTRY OF PUBLIC WORKS DIRECTORATE GENERAL OF HIGHWAYS	PROJECT AND LOCATION :	SCALE :	DRAWING TITLE :	DRAWING NO :
	Name: R. UENO	Name: T. OKUMURA	Name: M. KIUCHI		DETAILED DESIGN STUDY OF NORTH JAVA CORRIDOR FLYOVER PROJECT GEBANG FLYOVER - CONTRACT PACKAGE 2 (NAGREG - GEBANG) WEST JAVA PROVINCE	1 : 200	CROSS SECTION STA. 0 + 000.000 - STA. 0 + 060.000 (1 OF 14)	GRD-031
	Sign	Sign	Sign	APPROVED BY: Ir. HERRY VAZA M,Eng.Sc NIP. : 110038400				SHEET NO :
	Date	Date	Date	Sign / Date		FULL SIZE A3		31 / 69

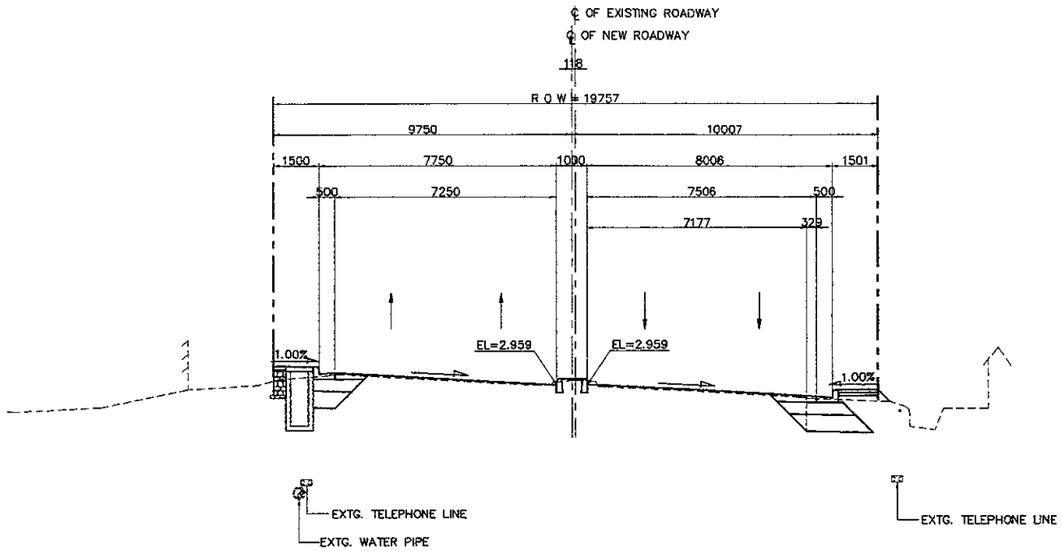

2 SECTION (STA. 0 + 020.000)
SCALE 1:200

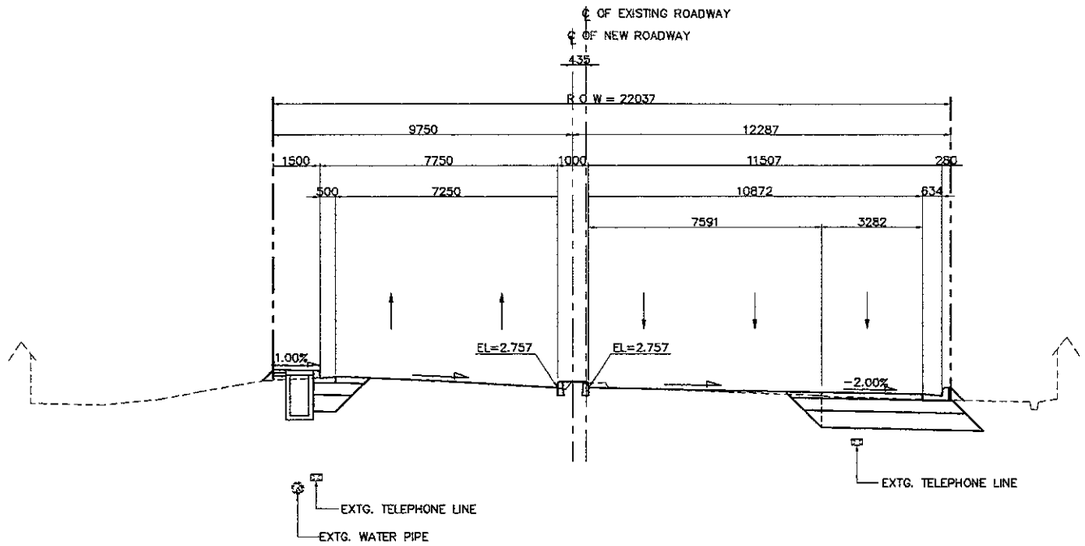

4 SECTION (STA. 0 + 060.000)
SCALE 1:200

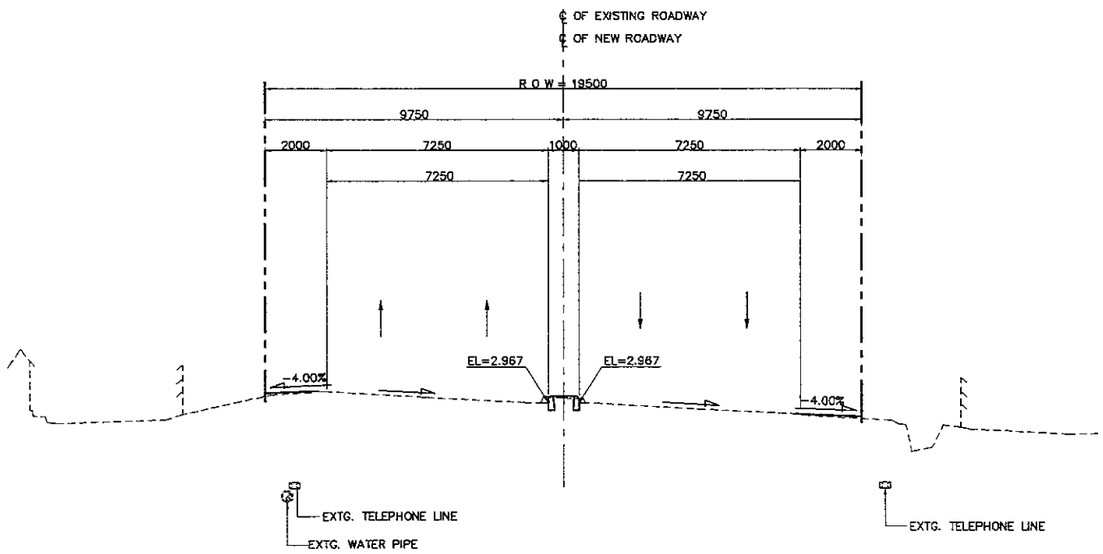

1 SECTION (STA. 0 + 000.000)
SCALE 1:200

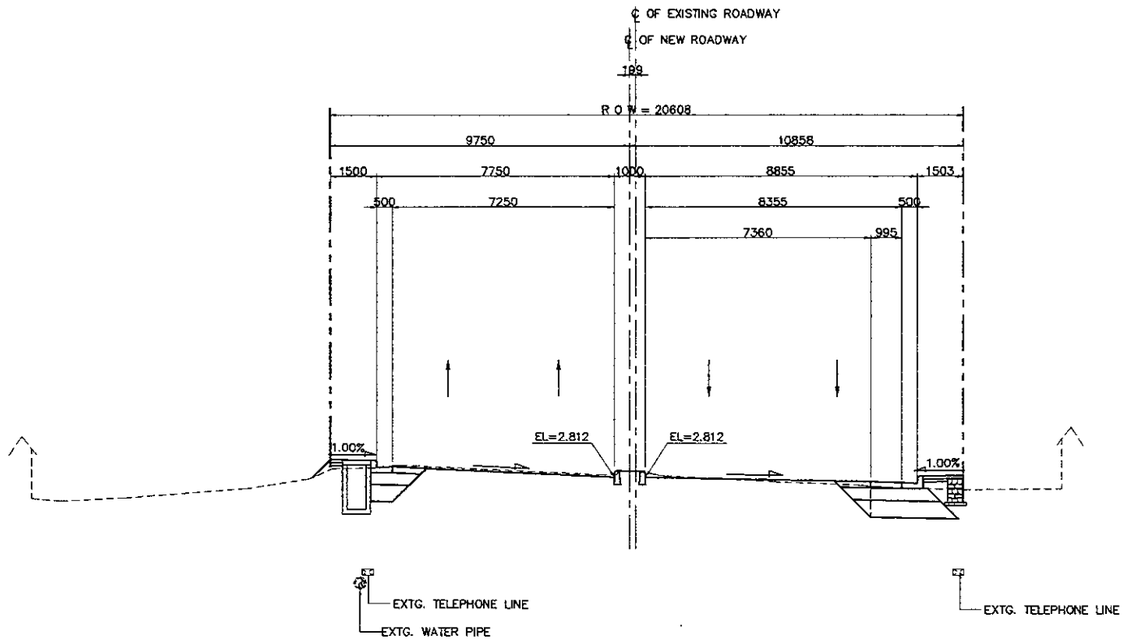

3 SECTION (STA. 0 + 040.000)
SCALE 1:200

NOTES:

1. ALL DIMENSIONS AND ELEVATIONS SHALL BE VERIFIED DURING CONSTRUCTION.
2. LOCATION OF EXISTING UTILITIES SHALL BE VERIFIED PRIOR TO CONSTRUCTION.
3. FOR LOCATION AND INVERT ELEVATIONS OF DRAINAGE SYSTEM (DITCH AND RCP) REFER TO DRAINAGE DRAWINGS.

JAPAN INTERNATIONAL COOPERATION AGENCY KATAHIRA & ENGINEERS INTERNATIONAL	DESIGNED BY	CHECKED BY	SUBMITTED BY	REPUBLIC OF INDONESIA MINISTRY OF PUBLIC WORKS DIRECTORATE GENERAL OF HIGHWAYS	PROJECT AND LOCATION :	SCALE :	DRAWING TITLE :	DRAWING NO :
	Name: R. UENO	Name: T. OKUMURA	Name: M. KIUCHI		DETAILED DESIGN STUDY OF NORTH JAVA CORRIDOR FLYOVER PROJECT GEBANG FLYOVER - CONTRACT PACKAGE 2 (NAGREG - GEBANG) WEST JAVA PROVINCE	1 : 200	CROSS SECTION STA. 0 + 080.000 - STA. 0 + 140.000 (2 OF 14)	GRD-032
	Sign	Sign	Sign	APPROVED BY: Ir. HERRY VAZA M.Eng.Sc NIP. : 110038400				SHEET NO :
	Date	Date	Date	Sign / Date		FULL SIZE A3		32 / 69

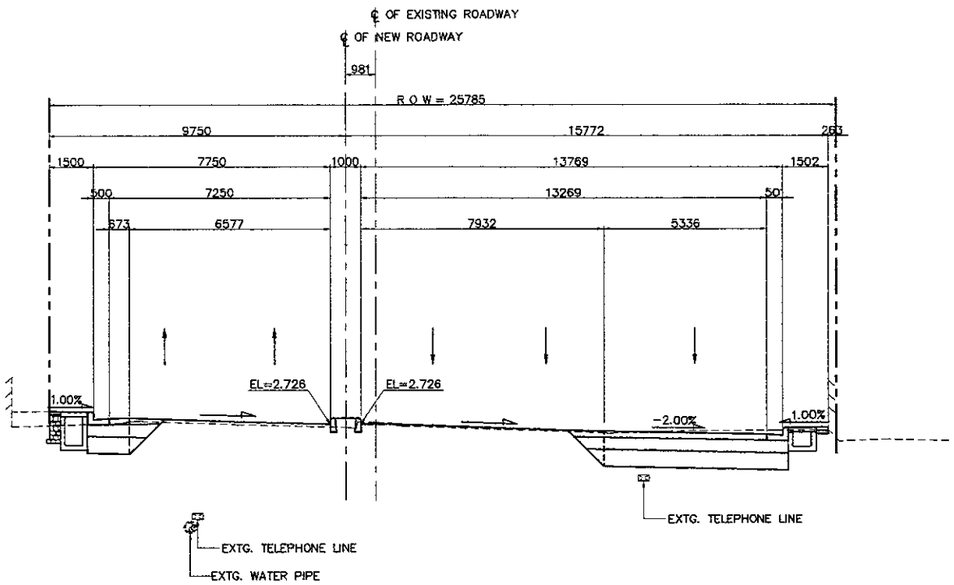

2 SECTION (STA. 0 + 100.000)
SCALE 1:200

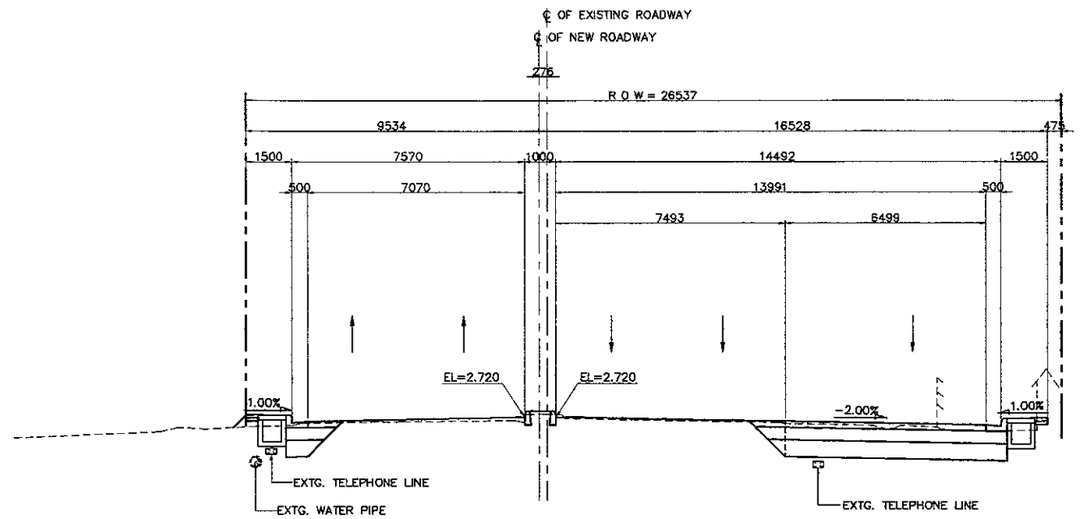

4 SECTION (STA. 0 + 140.000)
SCALE 1:200

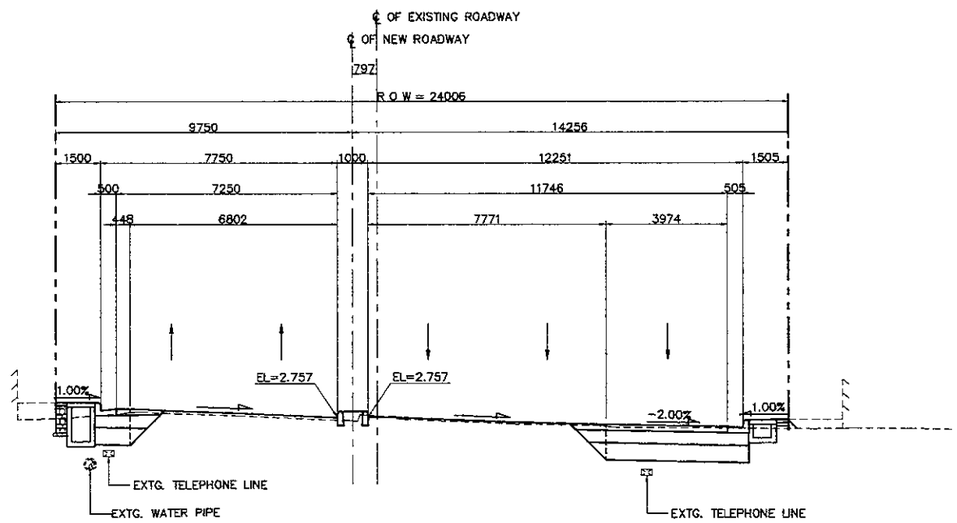

1 SECTION (STA. 0 + 080.000)
SCALE 1:200

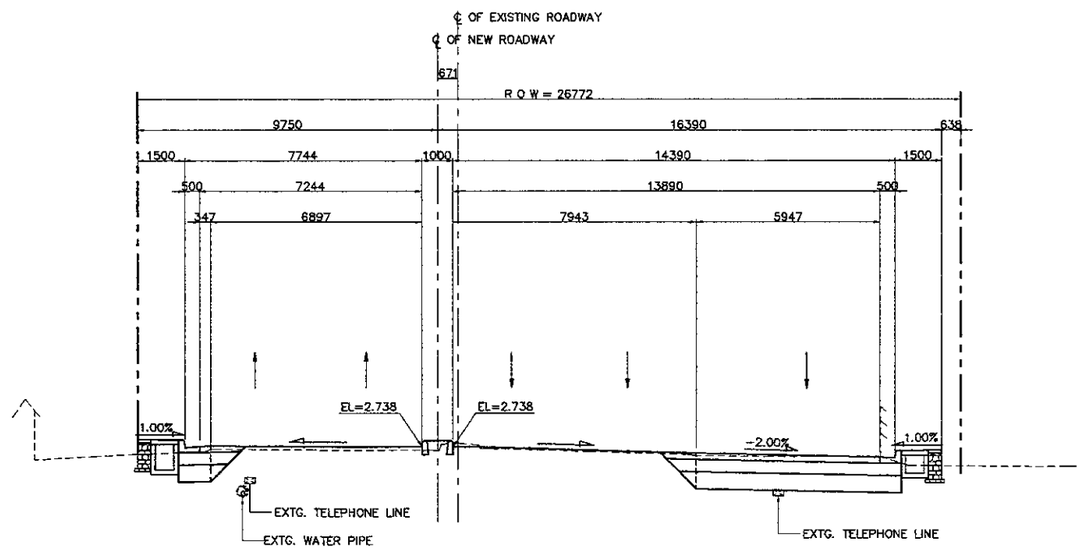

3 SECTION (STA. 0 + 120.000)
SCALE 1:200

NOTES:

1. ALL DIMENSIONS AND ELEVATIONS SHALL BE VERIFIED DURING CONSTRUCTION.
2. LOCATION OF EXISTING UTILITIES SHALL BE VERIFIED PRIOR TO CONSTRUCTION.
3. FOR LOCATION AND INVERT ELEVATIONS OF DRAINAGE SYSTEM (DITCH AND RCP) REFER TO DRAINAGE DRAWINGS.

JAPAN INTERNATIONAL COOPERATION AGENCY KATAHIRA & ENGINEERS INTERNATIONAL	DESIGNED BY	CHECKED BY	SUBMITTED BY	REPUBLIC OF INDONESIA MINISTRY OF PUBLIC WORKS DIRECTORATE GENERAL OF HIGHWAYS	PROJECT AND LOCATION :	SCALE :	DRAWING TITLE :	DRAWING NO :
	Name: R. UENO	Name: T. OKUMURA	Name: M. KIUCHI		DETAILED DESIGN STUDY OF NORTH JAVA CORRIDOR FLYOVER PROJECT GEBANG FLYOVER - CONTRACT PACKAGE 2 (NAGREG - GEBANG) WEST JAVA PROVINCE	1 : 200	CROSS SECTION STA. 0 + 160.000 - STA. 0 + 220.000 (3 OF 14)	GRD-033
	Sign	Sign	Sign	APPROVED BY: Ir. HERRY VAZA M,Eng.Sc NIP. : 110038400		FULL SIZE A3		SHEET NO : 33 / 69
	Date	Date	Date	Sign / Date				

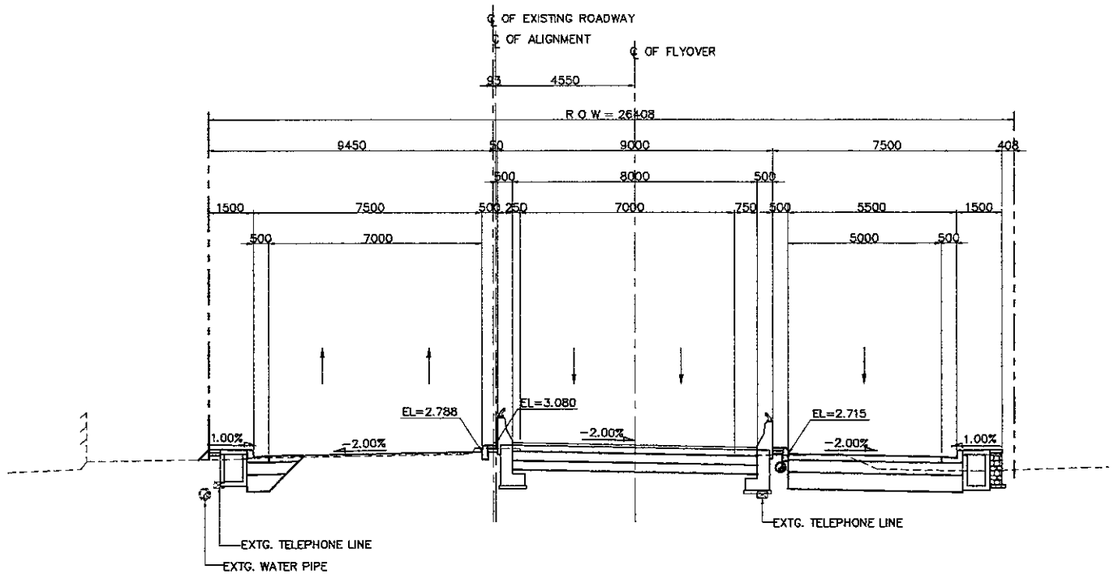

2 - SECTION (STA. 0 + 180.000)
SCALE 1:200

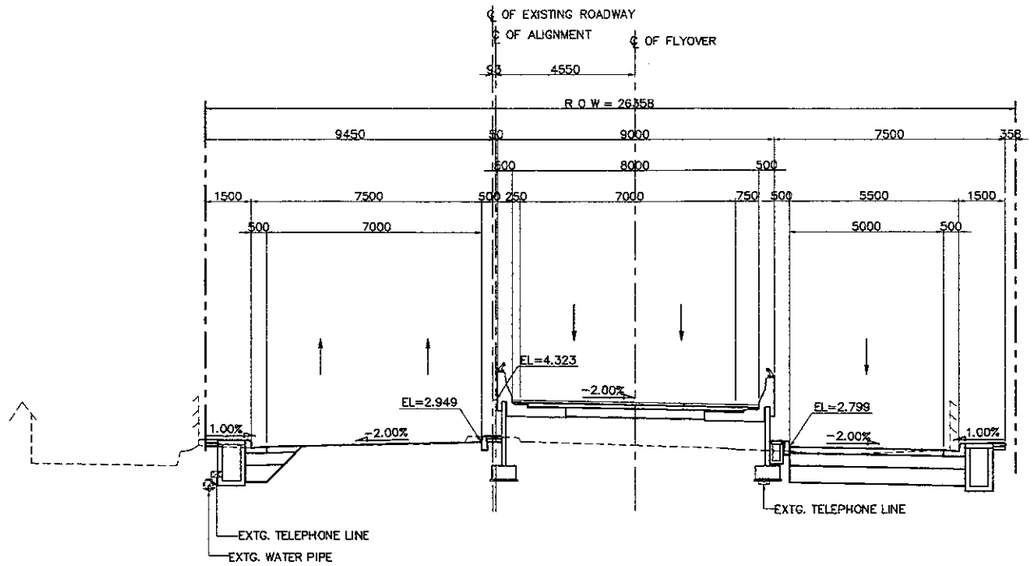

4 - SECTION (STA. 0 + 220.000)
SCALE 1:200

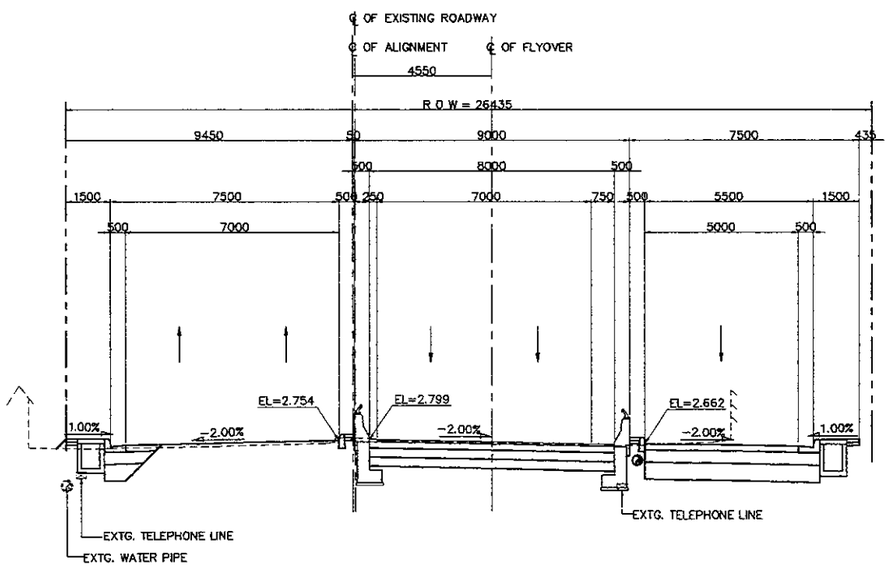

1 - SECTION (STA. 0 + 160.000)
SCALE 1:200

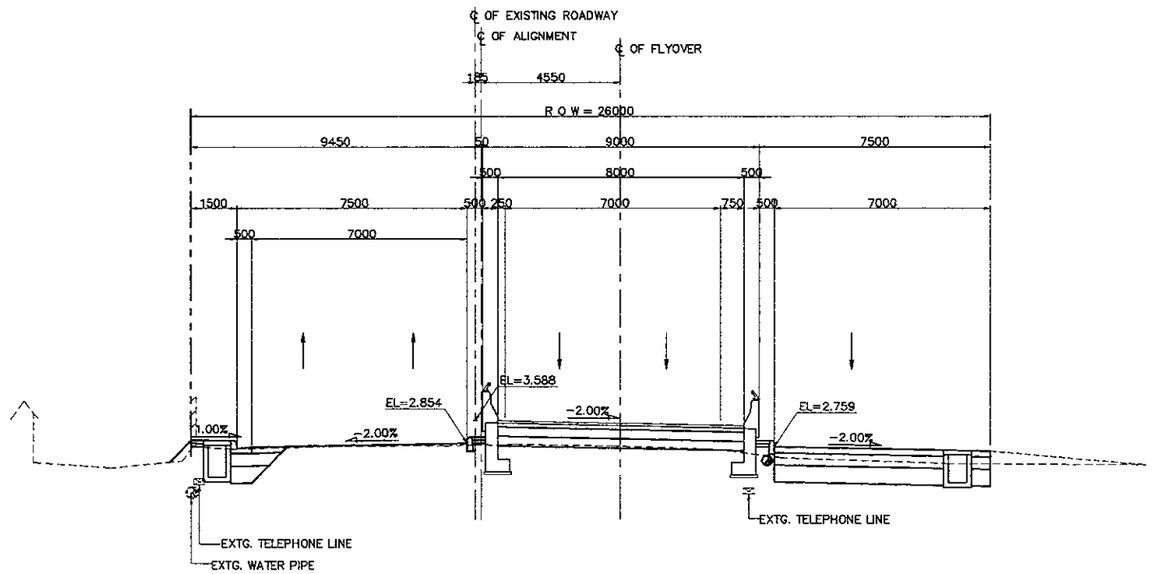

3 - SECTION (STA. 0 + 200.000)
SCALE 1:200

NOTES:

1. ALL DIMENSIONS AND ELEVATIONS SHALL BE VERIFIED DURING CONSTRUCTION.
2. LOCATION OF EXISTING UTILITIES SHALL BE VERIFIED PRIOR TO CONSTRUCTION.
3. FOR LOCATION AND INVERT ELEVATIONS OF DRAINAGE SYSTEM (DITCH AND RCP) REFER TO DRAINAGE DRAWINGS.

JAPAN INTERNATIONAL COOPERATION AGENCY KATAHIRA & ENGINEERS INTERNATIONAL	DESIGNED BY	CHECKED BY	SUBMITTED BY	REPUBLIC OF INDONESIA MINISTRY OF PUBLIC WORKS DIRECTORATE GENERAL OF HIGHWAYS	PROJECT AND LOCATION :	SCALE :	DRAWING TITLE :	DRAWING NO :
	Name: R. UENO	Name: T. OKUMURA	Name: M. KIUCHI		DETAILED DESIGN STUDY OF NORTH JAVA CORRIDOR FLYOVER PROJECT GEBANG FLYOVER - CONTRACT PACKAGE 2 (NAGREG - GEBANG) WEST JAVA PROVINCE	1 : 200	CROSS SECTION STA. 0 + 240.000 - STA. 0 + 300.000 (4 OF 14)	GRD-034
	Sign	Sign	Sign	APPROVED BY: Ir. HERRY VAZA M,Eng.Sc				SHEET NO :
	Date	Date	Date	NIP. : 110038400 / Sign / Date		FULL SIZE A3		34 / 69

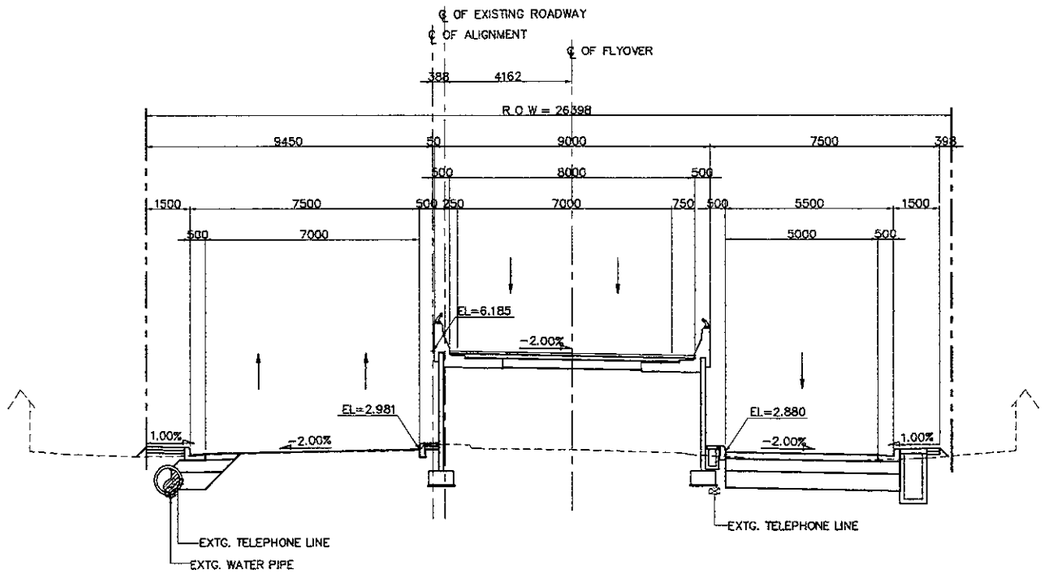

2 - SECTION (STA. 0 + 260.000)
SCALE 1:200

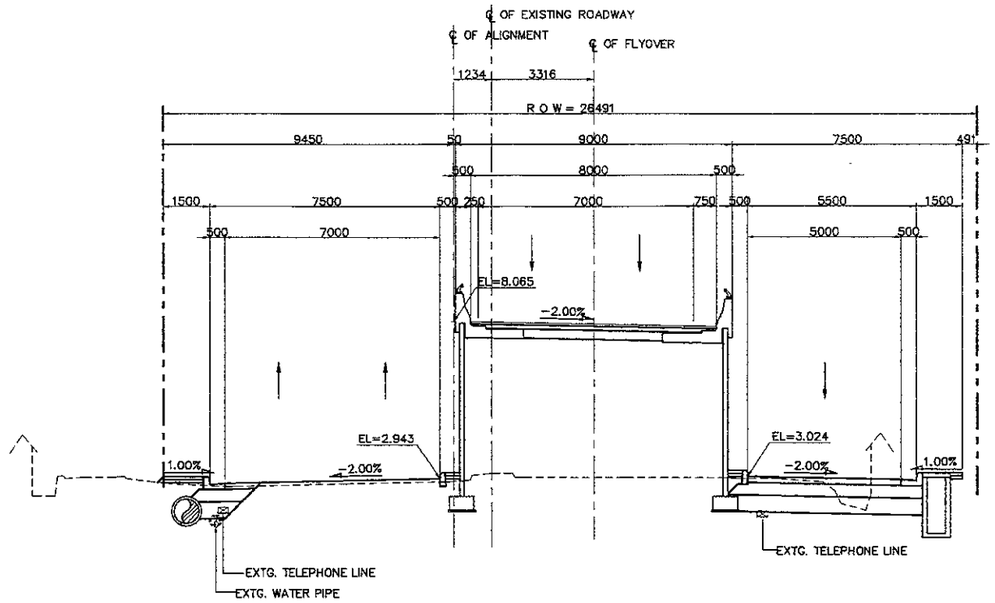

4 - SECTION (STA. 0 + 300.000)
SCALE 1:200

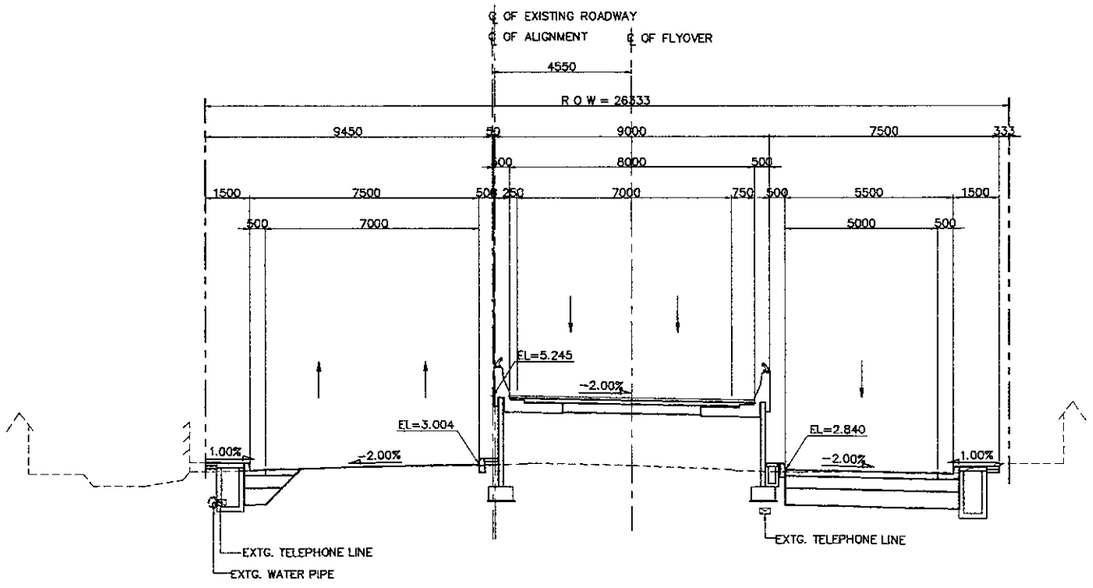

1 - SECTION (STA. 0 + 240.000)
SCALE 1:200

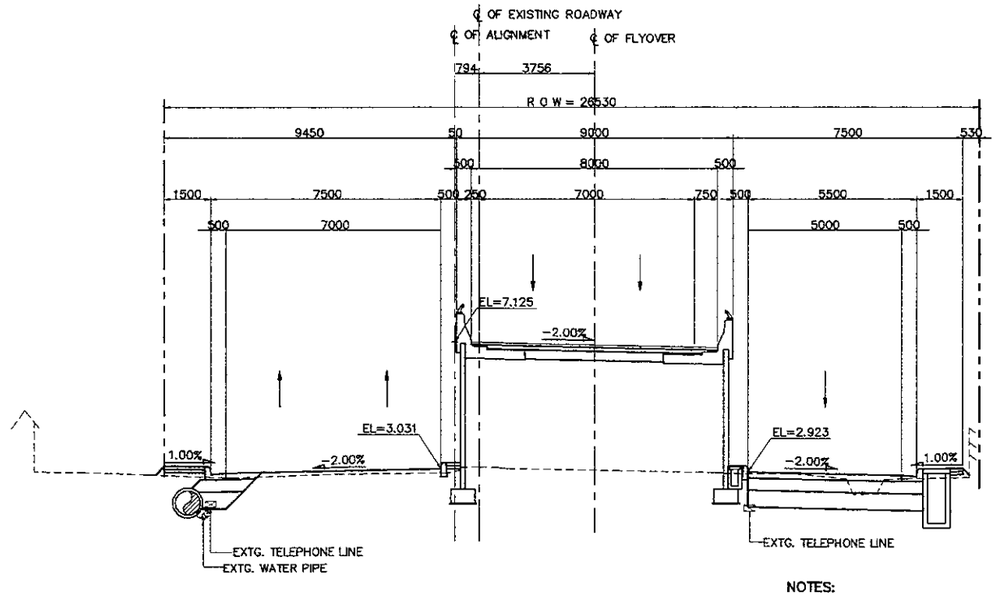

3 - SECTION (STA. 0 + 280.000)
SCALE 1:200

NOTES:

1. ALL DIMENSIONS AND ELEVATIONS SHALL BE VERIFIED DURING CONSTRUCTION.
2. LOCATION OF EXISTING UTILITIES SHALL BE VERIFIED PRIOR TO CONSTRUCTION.
3. FOR LOCATION AND INVERT ELEVATIONS OF DRAINAGE SYSTEM (DITCH AND RCP) REFER TO DRAINAGE DRAWINGS.

JAPAN INTERNATIONAL COOPERATION AGENCY KATAHIRA & ENGINEERS INTERNATIONAL	DESIGNED BY	CHECKED BY	SUBMITTED BY	REPUBLIC OF INDONESIA MINISTRY OF PUBLIC WORKS DIRECTORATE GENERAL OF HIGHWAYS	PROJECT AND LOCATION :	SCALE :	DRAWING TITLE :	DRAWING NO :
	Name: R. UENO	Name: T. OKUMURA	Name: M. KIUCHI		DETAILED DESIGN STUDY OF NORTH JAVA CORRIDOR FLYOVER PROJECT GEBANG FLYOVER - CONTRACT PACKAGE 2 (NAGREG - GEBANG) WEST JAVA PROVINCE	1 : 200	CROSS SECTION STA. 0 + 320.000 - STA. 0 + 380.000 (5 OF 14)	GRD-035
	Sign	Sign	Sign	APPROVED BY: Ir. HERRY VAZA M,Eng.Sc NIP. : 110038400				SHEET NO :
	Date	Date	Date	Sign / Date		FULL SIZE A3		35 / 69

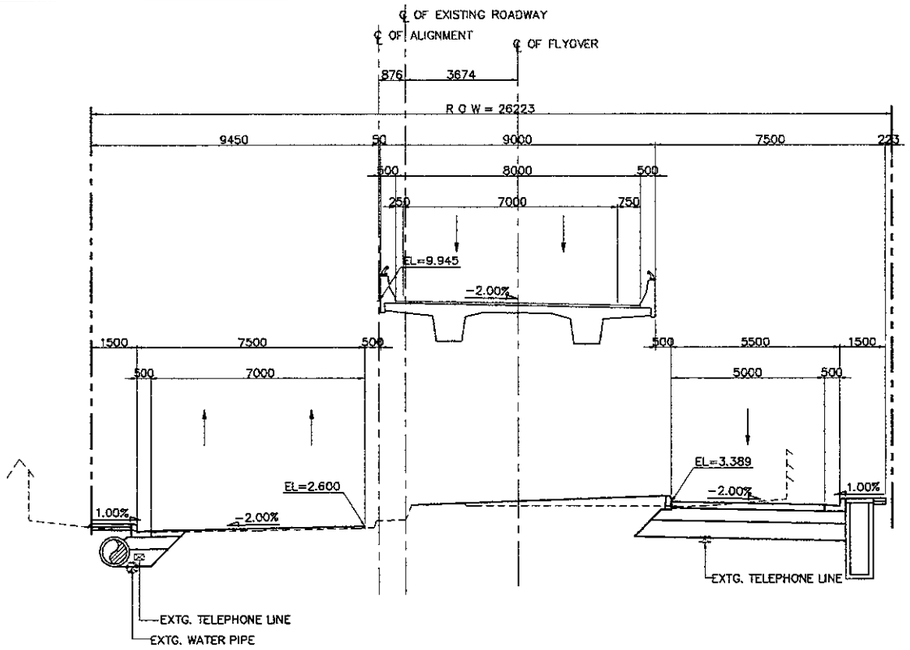

2 - SECTION (STA. 0 + 340.000)
SCALE 1:200

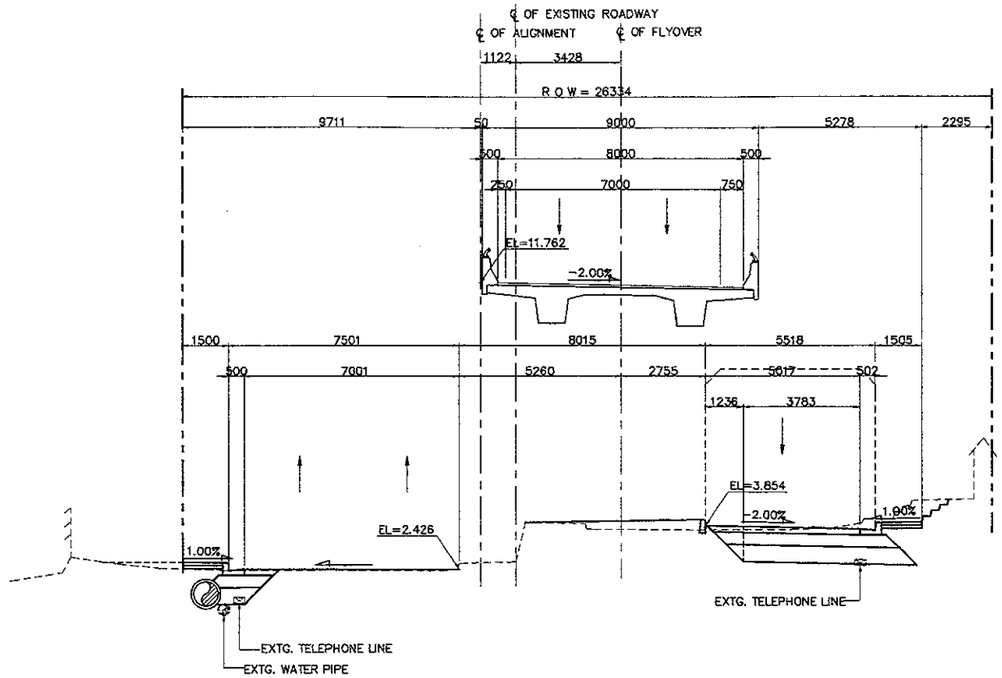

4 - SECTION (STA. 0 + 380.000)
SCALE 1:200

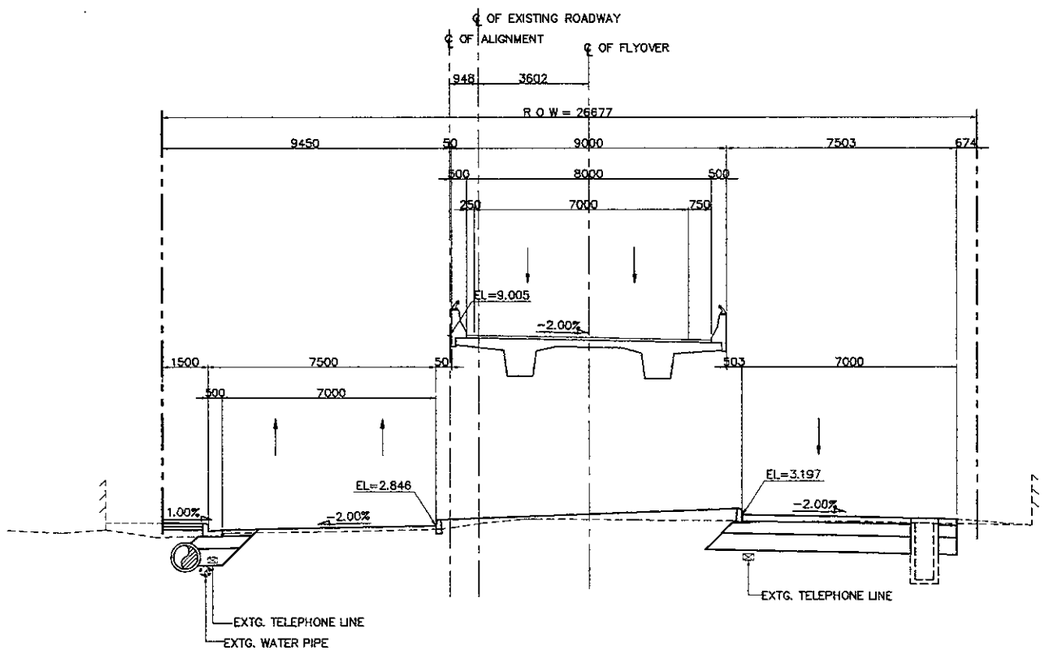

1 - SECTION (STA. 0 + 320.000)
SCALE 1:200

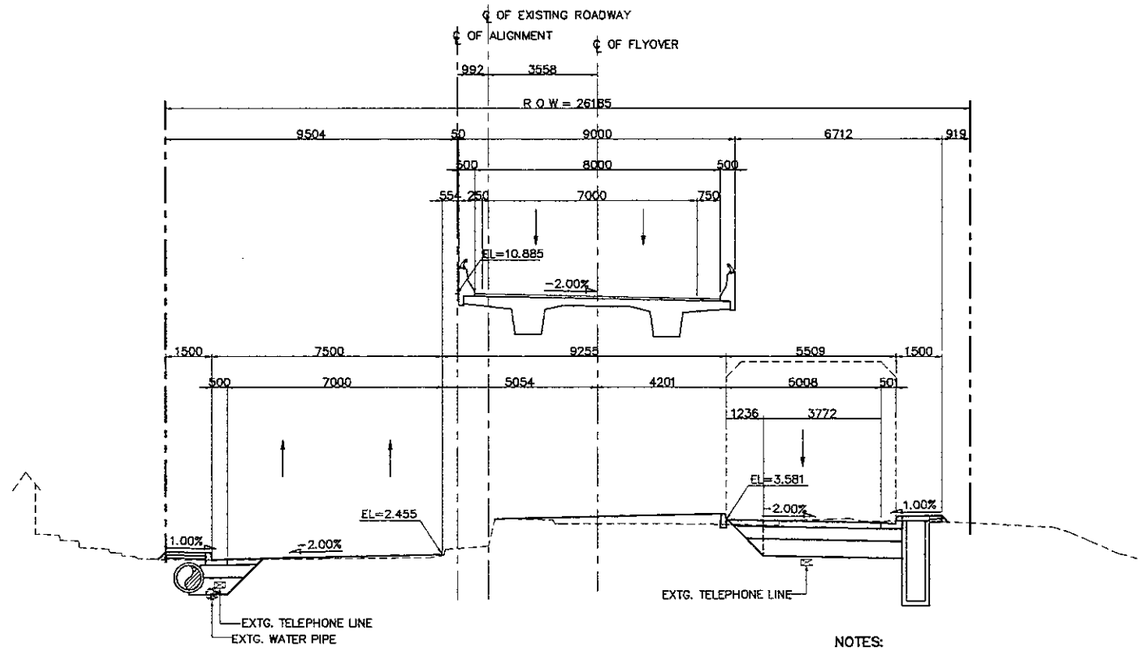

3 - SECTION (STA. 0 + 360.000)
SCALE 1:200

NOTES:

1. ALL DIMENSIONS AND ELEVATIONS SHALL BE VERIFIED DURING CONSTRUCTION.
2. LOCATION OF EXISTING UTILITIES SHALL BE VERIFIED PRIOR TO CONSTRUCTION.
3. FOR LOCATION AND INVERT ELEVATIONS OF DRAINAGE SYSTEM (DITCH AND RCP) REFER TO DRAINAGE DRAWINGS.

JAPAN INTERNATIONAL COOPERATION AGENCY KATAHIRA & ENGINEERS INTERNATIONAL	DESIGNED BY	CHECKED BY	SUBMITTED BY	REPUBLIC OF INDONESIA MINISTRY OF PUBLIC WORKS DIRECTORATE GENERAL OF HIGHWAYS	PROJECT AND LOCATION :	SCALE :	DRAWING TITLE :	DRAWING NO :
	Name: R. UENO	Name: T. OKUMURA	Name: M. KIUCHI		DETAILED DESIGN STUDY OF NORTH JAVA CORRIDOR FLYOVER PROJECT GEBANG FLYOVER - CONTRACT PACKAGE 2 (NAGREG - GEBANG) WEST JAVA PROVINCE	1 : 200	CROSS SECTION STA. 0 + 400.000 - STA. 0 + 460.000 (6 OF 14)	GRD-036
	Sign	Sign	Sign	APPROVED BY: Ir. HERRY VAZA M.Eng.Sc NIP. : 110038400		FULL SIZE A3		SHEET NO : 36 / 69
	Date	Date	Date	Sign / Date				

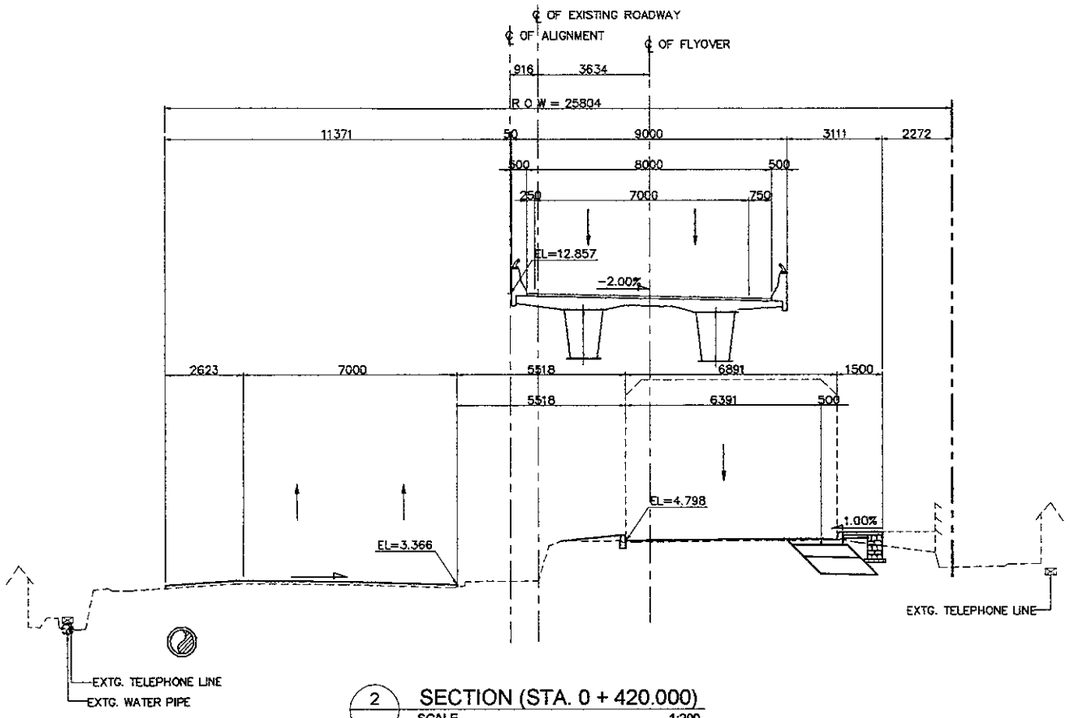

2 - SECTION (STA. 0 + 420.000)
SCALE 1:200

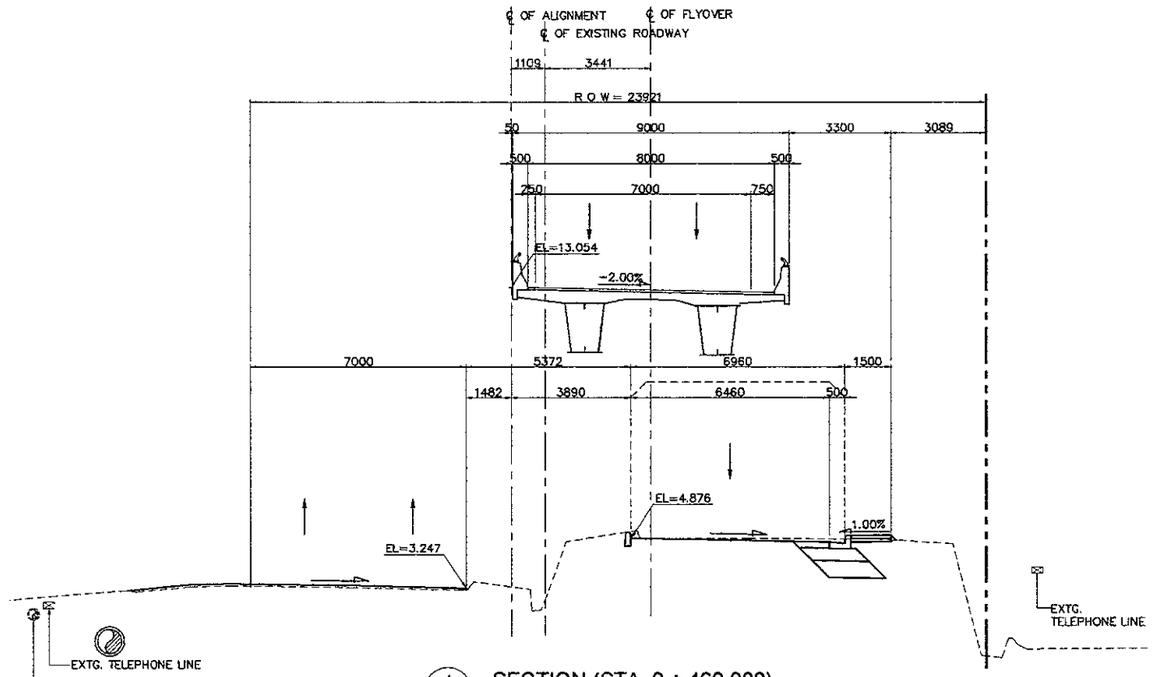

4 - SECTION (STA. 0 + 460.000)
SCALE 1:200

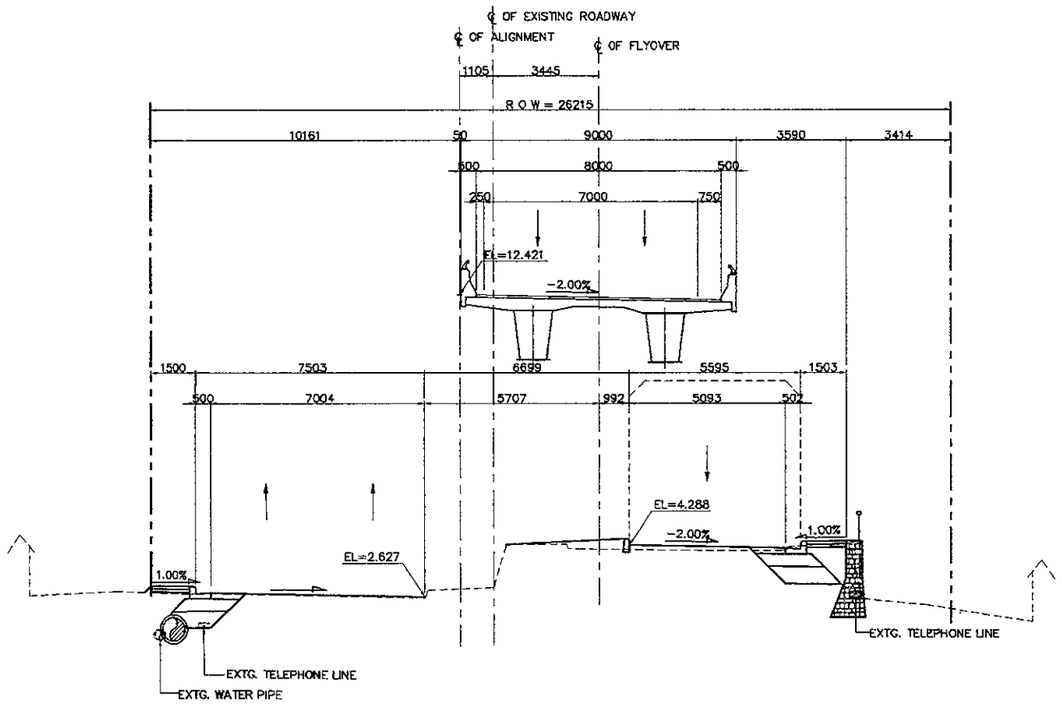

1 - SECTION (STA. 0 + 400.000)
SCALE 1:200

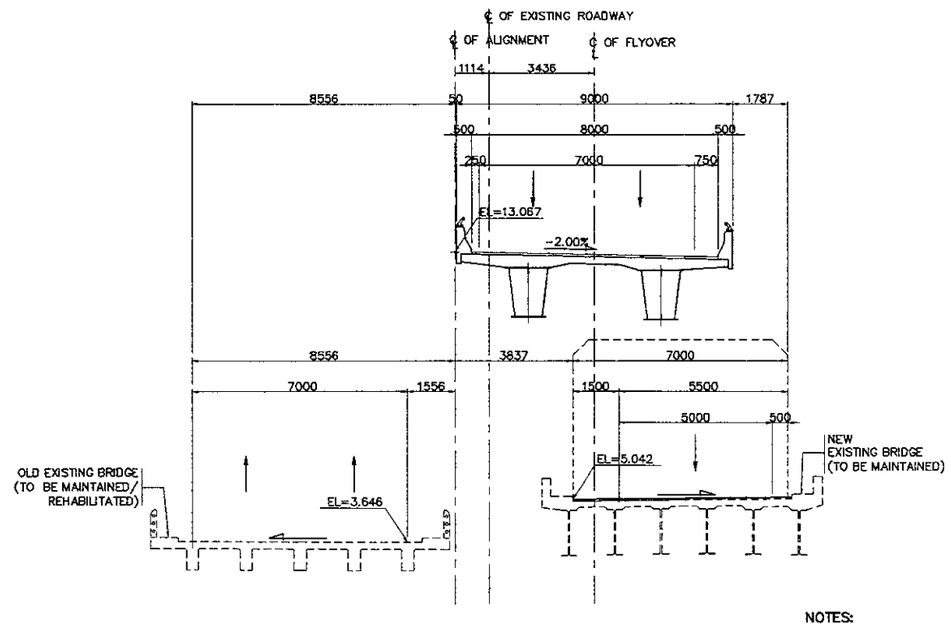

3 - SECTION (STA. 0 + 440.000)
SCALE 1:200

NOTES:

1. ALL DIMENSIONS AND ELEVATIONS SHALL BE VERIFIED DURING CONSTRUCTION.
2. LOCATION OF EXISTING UTILITIES SHALL BE VERIFIED PRIOR TO CONSTRUCTION.
3. FOR LOCATION AND INVERT ELEVATIONS OF DRAINAGE SYSTEM (DITCH AND RCP) REFER TO DRAINAGE DRAWINGS.

JAPAN INTERNATIONAL COOPERATION AGENCY KATAHIRA & ENGINEERS INTERNATIONAL	DESIGNED BY		CHECKED BY		SUBMITTED BY		REPUBLIC OF INDONESIA MINISTRY OF PUBLIC WORKS DIRECTORATE GENERAL OF HIGHWAYS	PROJECT AND LOCATION :	SCALE :	DRAWING TITLE :	DRAWING NO :
	Name	R. UENO	Name	T. OKUMURA	Name	M. KIUCHI		DETAILED DESIGN STUDY OF NORTH JAVA CORRIDOR FLYOVER PROJECT GEBANG FLYOVER - CONTRACT PACKAGE 2 (NAGREG - GEBANG) WEST JAVA PROVINCE	1 : 200	CROSS SECTION STA. 0 + 480.000 - STA. 0 + 540.000 (7 OF 14)	GRD-037
	Sign		Sign		Sign		APPROVED BY Ir. HERRY VAZA M,Eng.Sc Sign				SHEET NO :
	Date		Date		Date		NIP. : 110038400 Date		FULL SIZE A3		37 / 69

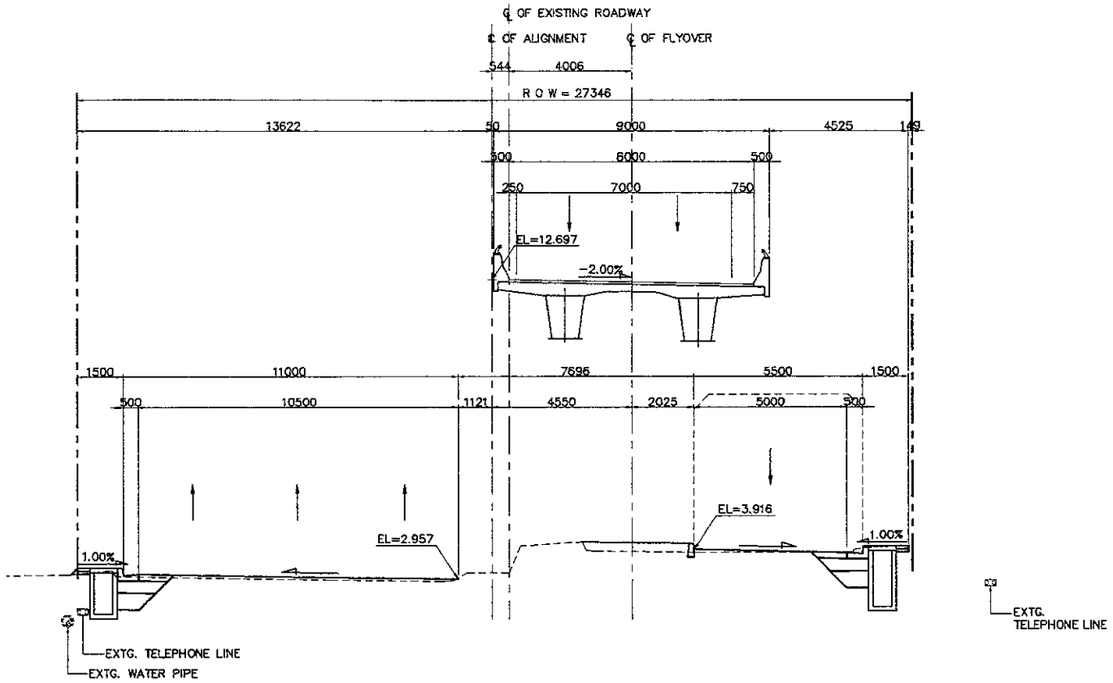

2 SECTION (STA. 0 + 500.000)
SCALE 1:200

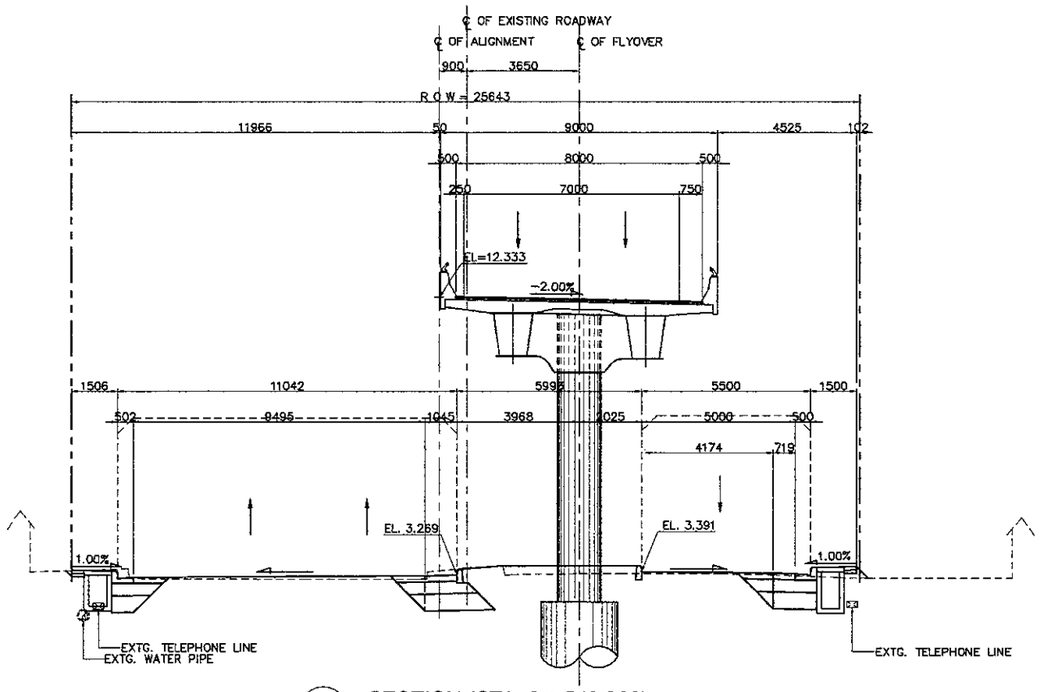

4 SECTION (STA. 0 + 540.000)
SCALE 1:200

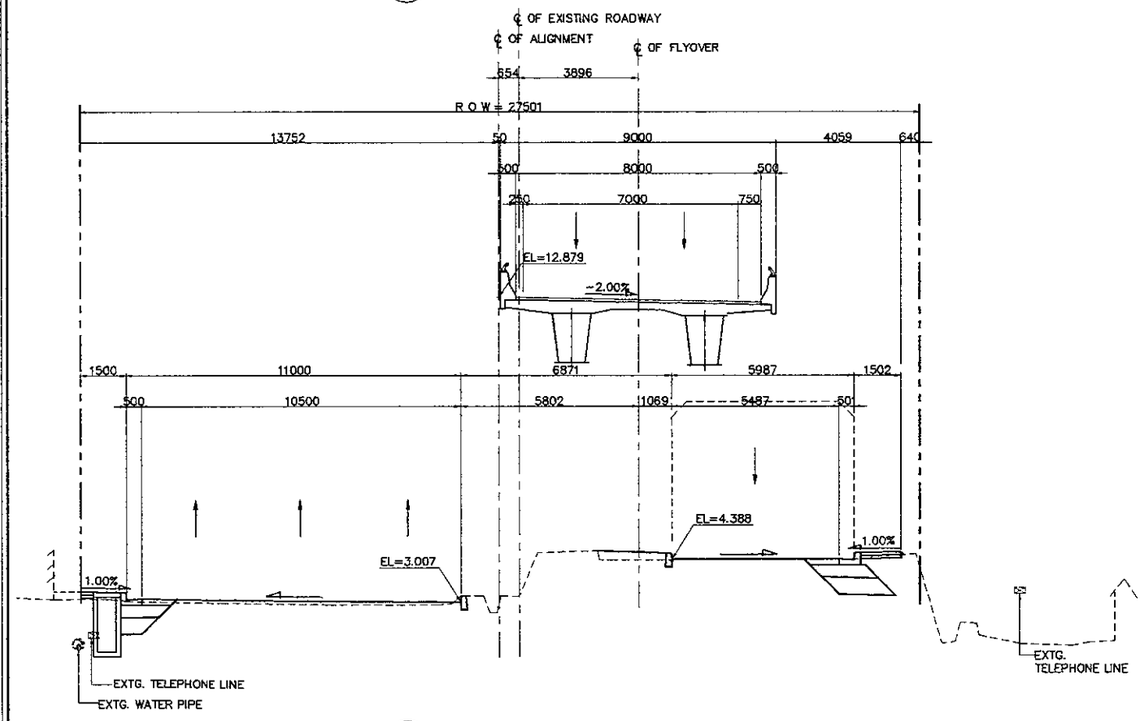

1 SECTION (STA. 0 + 480.000)
SCALE 1:200

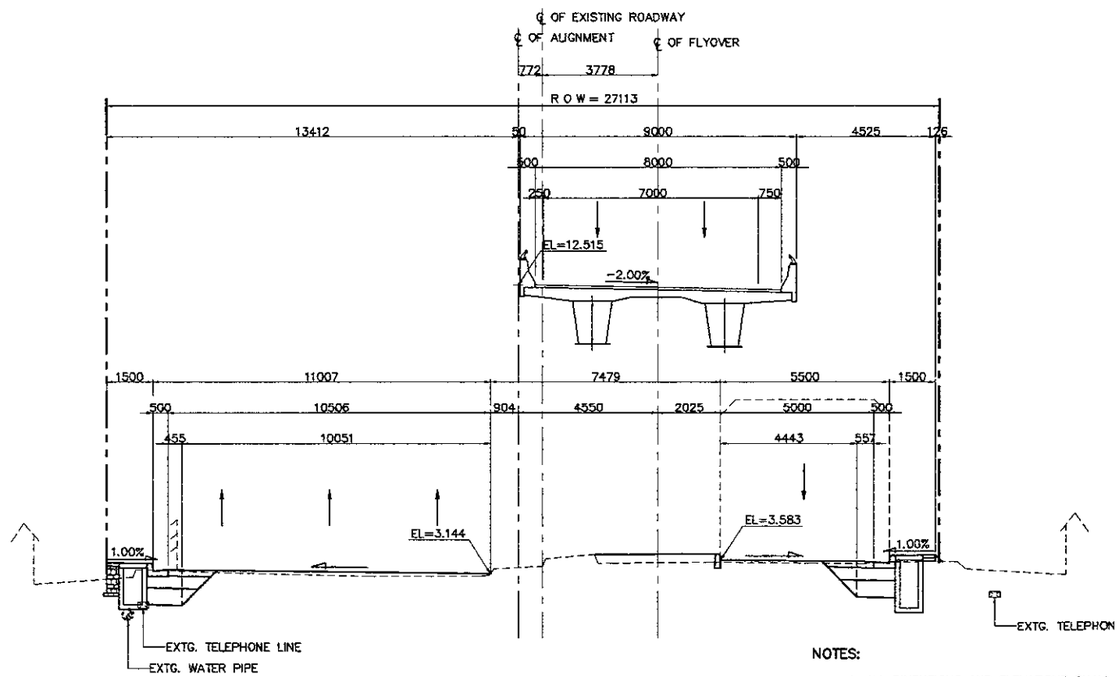

3 SECTION (STA. 0 + 520.000)
SCALE 1:200

NOTES:

1. ALL DIMENSIONS AND ELEVATIONS SHALL BE VERIFIED DURING CONSTRUCTION.
2. LOCATION OF EXISTING UTILITIES SHALL BE VERIFIED PRIOR TO CONSTRUCTION.
3. FOR LOCATION AND INVERT ELEVATIONS OF DRAINAGE SYSTEM (DITCH AND RCP) REFER TO DRAINAGE DRAWINGS.

JAPAN INTERNATIONAL COOPERATION AGENCY KATAHIRA & ENGINEERS INTERNATIONAL	DESIGNED BY	CHECKED BY	SUBMITTED BY	REPUBLIC OF INDONESIA MINISTRY OF PUBLIC WORKS DIRECTORATE GENERAL OF HIGHWAYS	PROJECT AND LOCATION :	SCALE :	DRAWING TITLE :	DRAWING NO :
	Name: R. UENO	Name: T. OKUMURA	Name: M. KIUCHI		DETAILED DESIGN STUDY OF NORTH JAVA CORRIDOR FLYOVER PROJECT GEBANG FLYOVER - CONTRACT PACKAGE 2 (NAGREG - GEBANG) WEST JAVA PROVINCE	1 : 200	CROSS SECTION STA. 0 + 560.000 - STA. 0 + 620.000 (8 OF 14)	GRD-038
	Sign	Sign	Sign	APPROVED BY: Ir. HERRY VAZA M,Eng.Sc NIP. : 110038400				SHEET NO :
	Date	Date	Date	Sign / Date		FULL SIZE A3		38 / 69

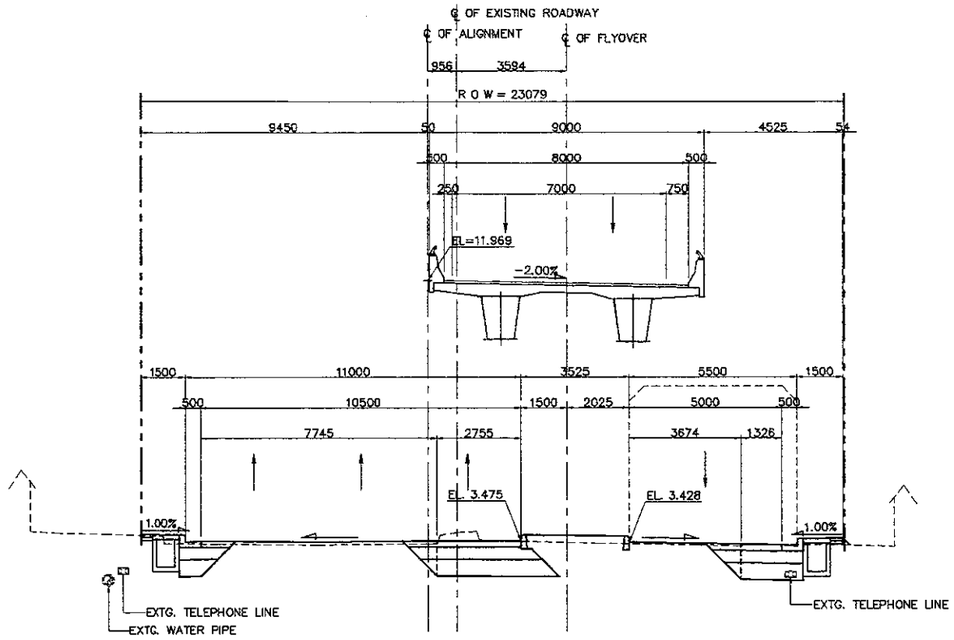

2 SECTION (STA. 0 + 580.000)
SCALE 1:200

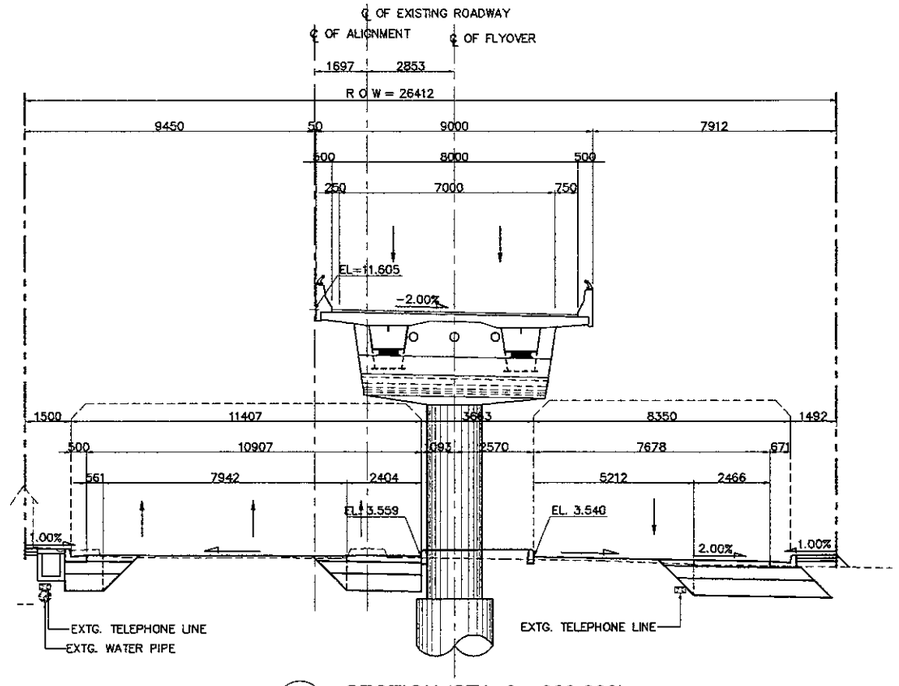

4 SECTION (STA. 0 + 620.000)
SCALE 1:200

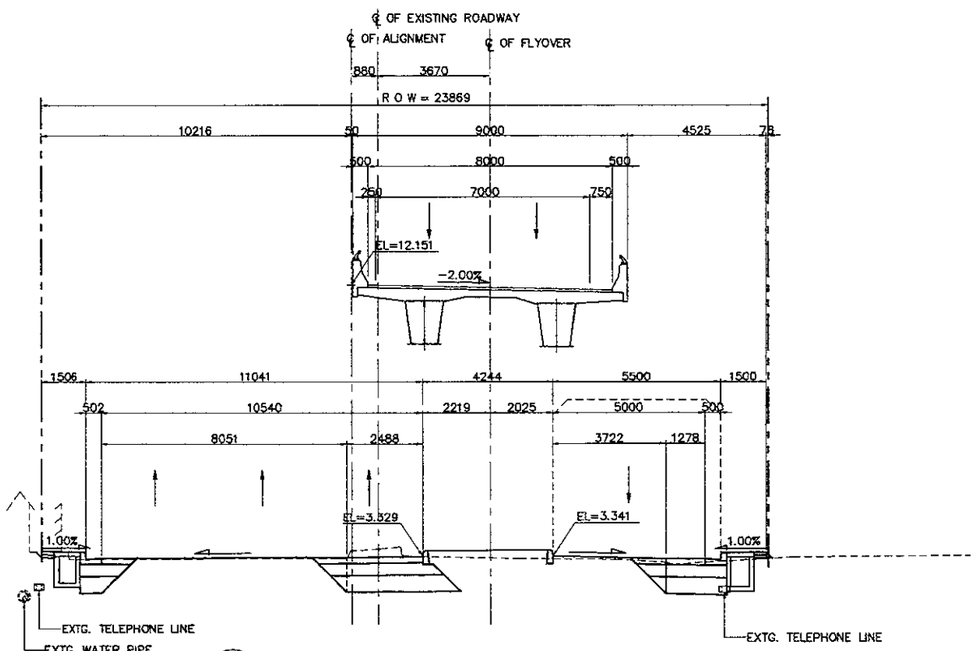

1 SECTION (STA. 0 + 560.000)
SCALE 1:200

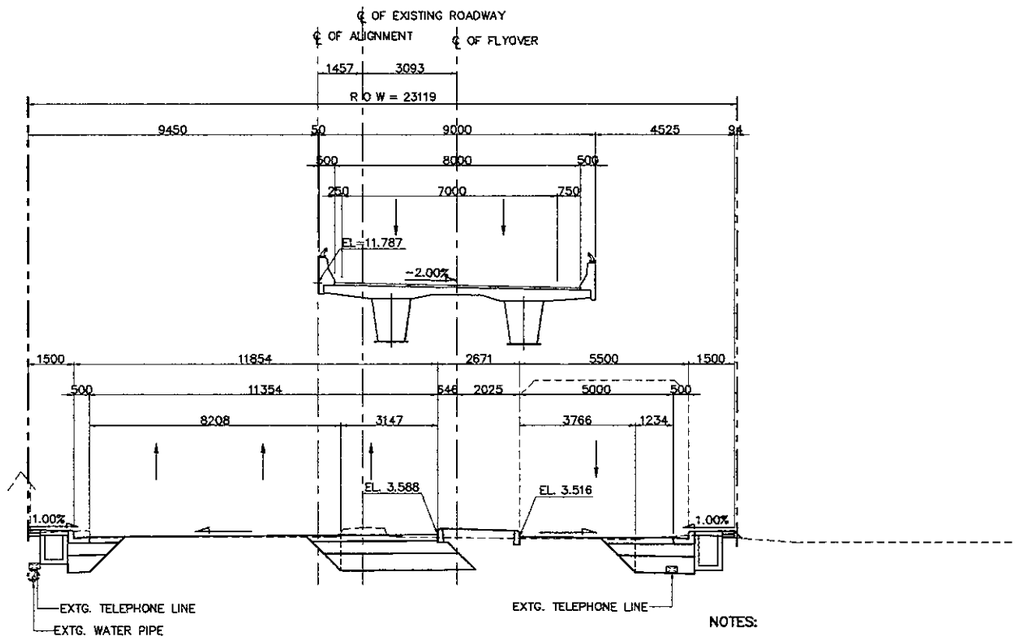

3 SECTION (STA. 0 + 600.000)
SCALE 1:200

NOTES:

1. ALL DIMENSIONS AND ELEVATIONS SHALL BE VERIFIED DURING CONSTRUCTION.
2. LOCATION OF EXISTING UTILITIES SHALL BE VERIFIED PRIOR TO CONSTRUCTION.
3. FOR LOCATION AND INVERT ELEVATIONS OF DRAINAGE SYSTEM (DITCH AND RCP) REFER TO DRAINAGE DRAWINGS.

JAPAN INTERNATIONAL COOPERATION AGENCY KATAHIRA & ENGINEERS INTERNATIONAL	DESIGNED BY	CHECKED BY	SUBMITTED BY	REPUBLIC OF INDONESIA MINISTRY OF PUBLIC WORKS DIRECTORATE GENERAL OF HIGHWAYS	PROJECT AND LOCATION :	SCALE :	DRAWING TITLE :	DRAWING NO :
	Name R. UENO	Name T. OKUMURA	Name M. KIUCHI		DETAILED DESIGN STUDY OF NORTH JAVA CORRIDOR FLYOVER PROJECT GEBANG FLYOVER - CONTRACT PACKAGE 2 (NAGREG - GEBANG) WEST JAVA PROVINCE	1 : 200	CROSS SECTION STA. 0 + 640.000 - STA. 0 + 700.000 (9 OF 14)	GRD-039
	Sign	Sign	Sign	APPROVED BY Ir. HERRY VAZA M,Eng.Sc NIP. : 110038400				SHEET NO :
	Date	Date	Date	Sign / Date		FULL SIZE A3		39 / 69

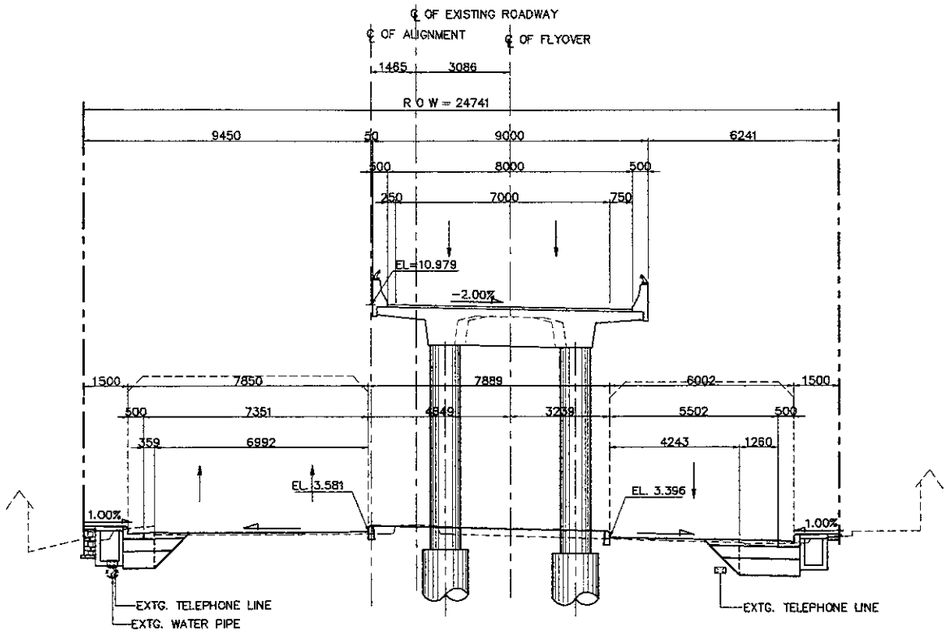

2 SECTION (STA. 0 + 660.000)
SCALE 1:200

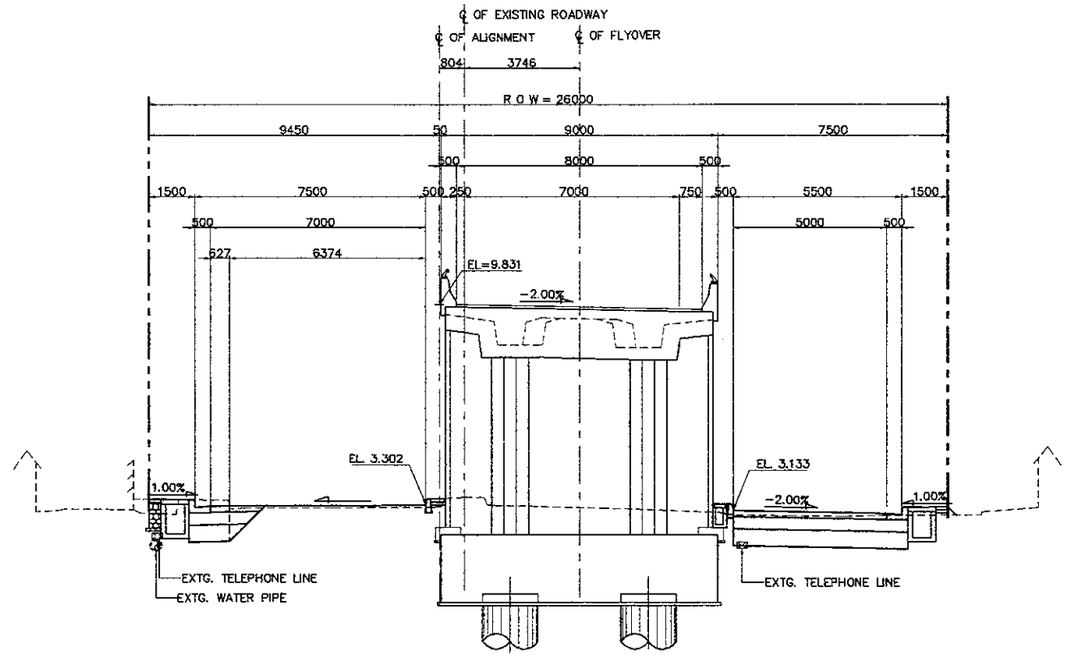

4 SECTION (STA. 0 + 700.000)
SCALE 1:200

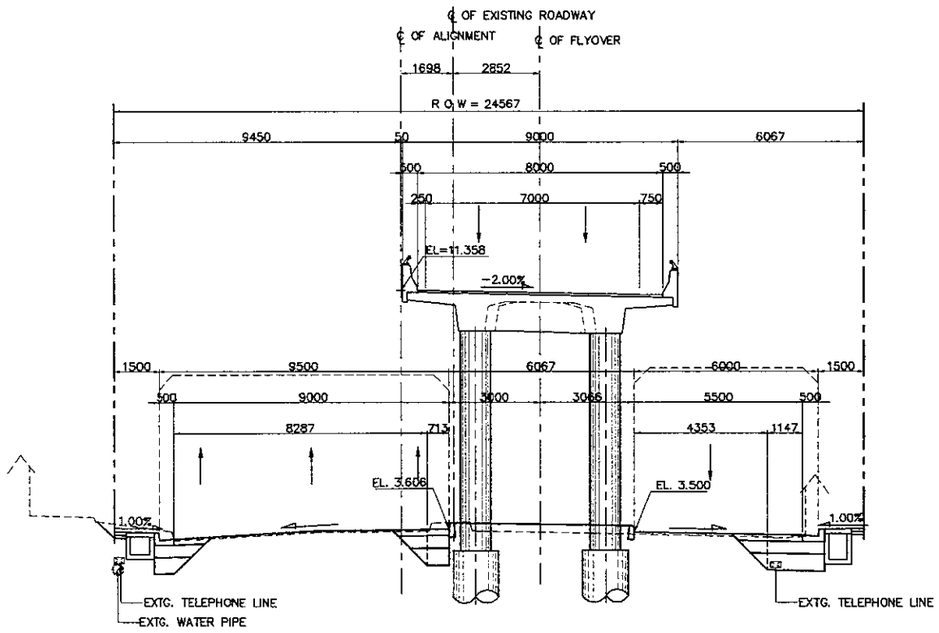

1 SECTION (STA. 0 + 640.000)
SCALE 1:200

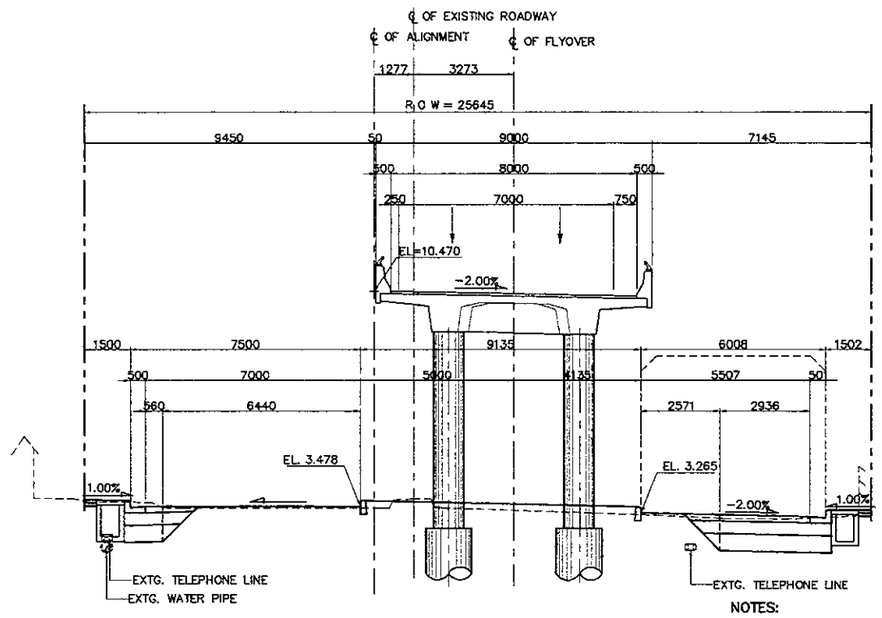

3 SECTION (STA. 0 + 690.000)
SCALE 1:200

NOTES:

1. ALL DIMENSIONS AND ELEVATIONS SHALL BE VERIFIED DURING CONSTRUCTION.
2. LOCATION OF EXISTING UTILITIES SHALL BE VERIFIED PRIOR TO CONSTRUCTION.
3. FOR LOCATION AND INVERT ELEVATIONS OF DRAINAGE SYSTEM (DITCH AND RCP) REFER TO DRAINAGE DRAWINGS.

JAPAN INTERNATIONAL COOPERATION AGENCY KATAHIRA & ENGINEERS INTERNATIONAL	DESIGNED BY	CHECKED BY	SUBMITTED BY	REPUBLIC OF INDONESIA MINISTRY OF PUBLIC WORKS DIRECTORATE GENERAL OF HIGHWAYS	PROJECT AND LOCATION :	SCALE :	DRAWING TITLE :	DRAWING NO :
	Name: R. UENO	Name: T. OKUMURA	Name: M. KIUCHI		DETAILED DESIGN STUDY OF NORTH JAVA CORRIDOR FLYOVER PROJECT GEBANG FLYOVER - CONTRACT PACKAGE 2 (NAGREG - GEBANG) WEST JAVA PROVINCE	1 : 200	CROSS SECTION STA. 0 + 720.000 - STA. 0 + 780.000 (10 OF 14)	GRD-040
	Sign	Sign	Sign	APPROVED BY: Ir. HERRY VAZA M,Eng.Sc NIP. : 110038400				SHEET NO :
	Date	Date	Date	Sign / Date		FULL SIZE A3		40 / 69

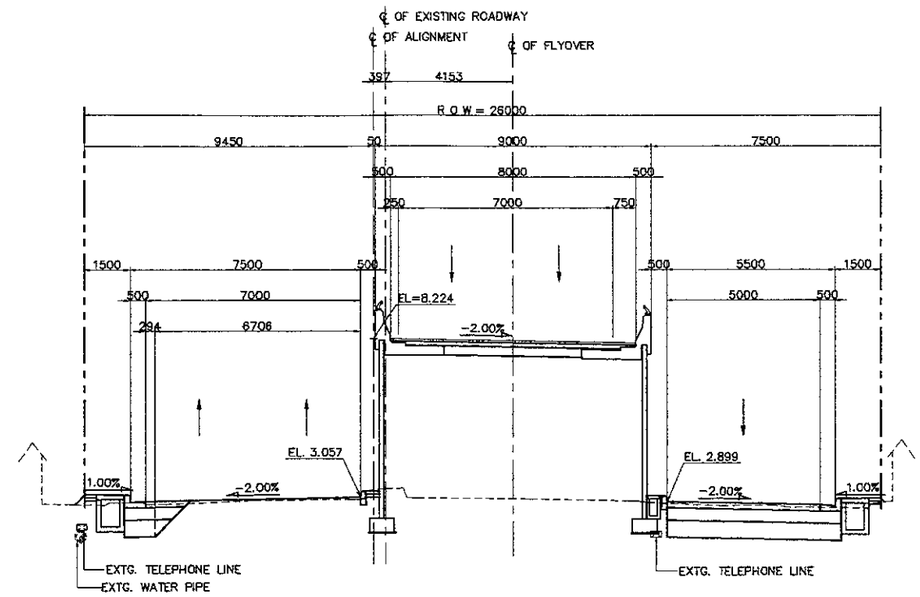

2 - SECTION (STA. 0 + 740.000)
SCALE 1:200

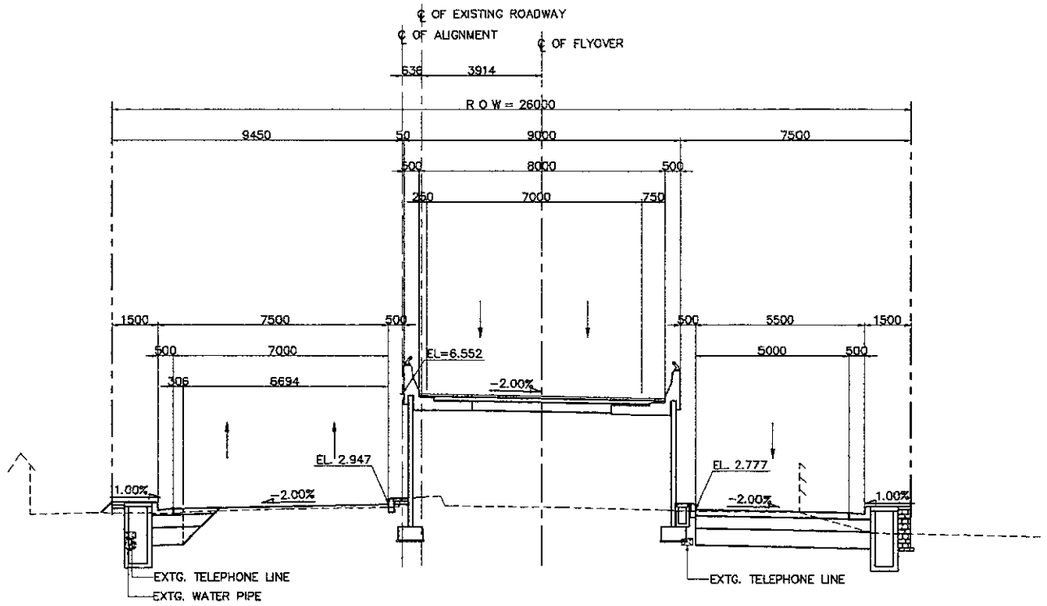

4 - SECTION (STA. 0 + 780.000)
SCALE 1:200

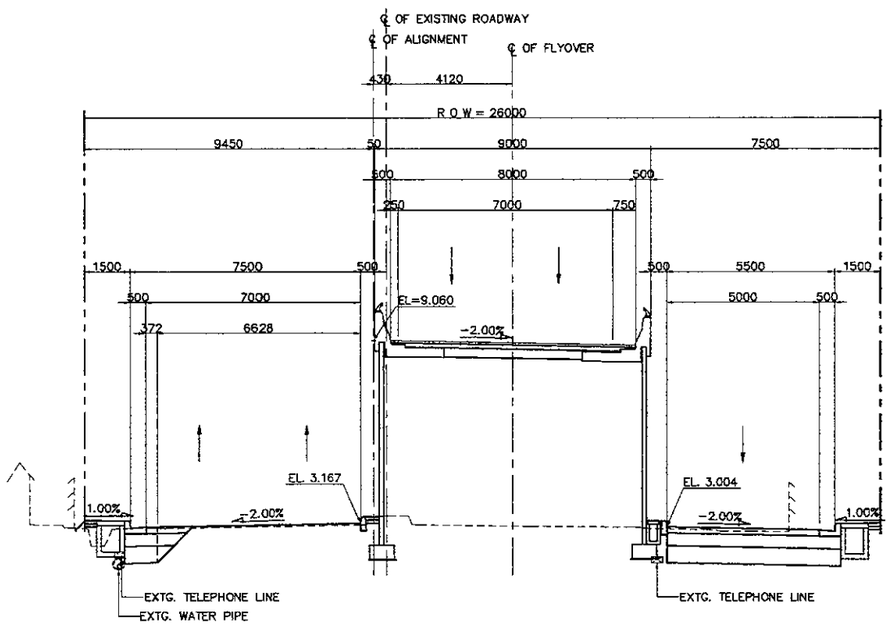

1 - SECTION (STA. 0 + 720.000)
SCALE 1:200

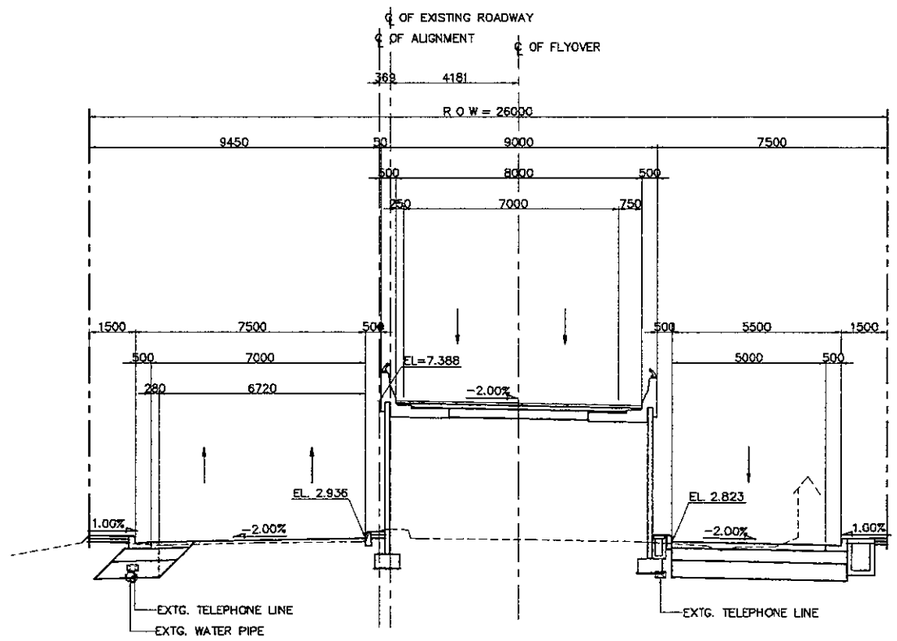

3 - SECTION (STA. 0 + 760.000)
SCALE 1:200

NOTES:

1. ALL DIMENSIONS AND ELEVATIONS SHALL BE VERIFIED DURING CONSTRUCTION.
2. LOCATION OF EXISTING UTILITIES SHALL BE VERIFIED PRIOR TO CONSTRUCTION.
3. FOR LOCATION AND INVERT ELEVATIONS OF DRAINAGE SYSTEM (DITCH AND RCP) REFER TO DRAINAGE DRAWINGS.

JAPAN INTERNATIONAL COOPERATION AGENCY KATAHIRA & ENGINEERS INTERNATIONAL	DESIGNED BY	CHECKED BY	SUBMITTED BY	REPUBLIC OF INDONESIA MINISTRY OF PUBLIC WORKS DIRECTORATE GENERAL OF HIGHWAYS	PROJECT AND LOCATION :	SCALE :	DRAWING TITLE :	DRAWING NO :
	Name R. UENO	Name T. OKUMURA	Name M. KIUCHI		DETAILED DESIGN STUDY OF NORTH JAVA CORRIDOR FLYOVER PROJECT GEBANG FLYOVER - CONTRACT PACKAGE 2 (NAGREG - GEBANG) WEST JAVA PROVINCE	1 : 200	CROSS SECTION STA. 0 + 800.000 - STA. 0 + 860.000 (11 OF 14)	GRD-041
	Sign	Sign	Sign	APPROVED BY Ir. HERRY VAZA M,Eng.Sc Sign				SHEET NO :
	Date	Date	Date	NIP. : 110038400 Date		FULL SIZE A3		41 / 69

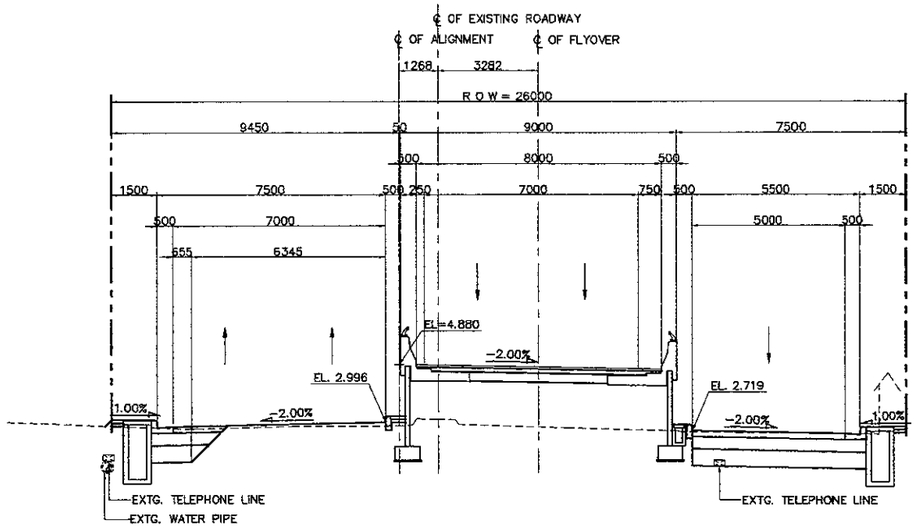

2 - SECTION (STA. 0 + 820.000)
SCALE 1:200

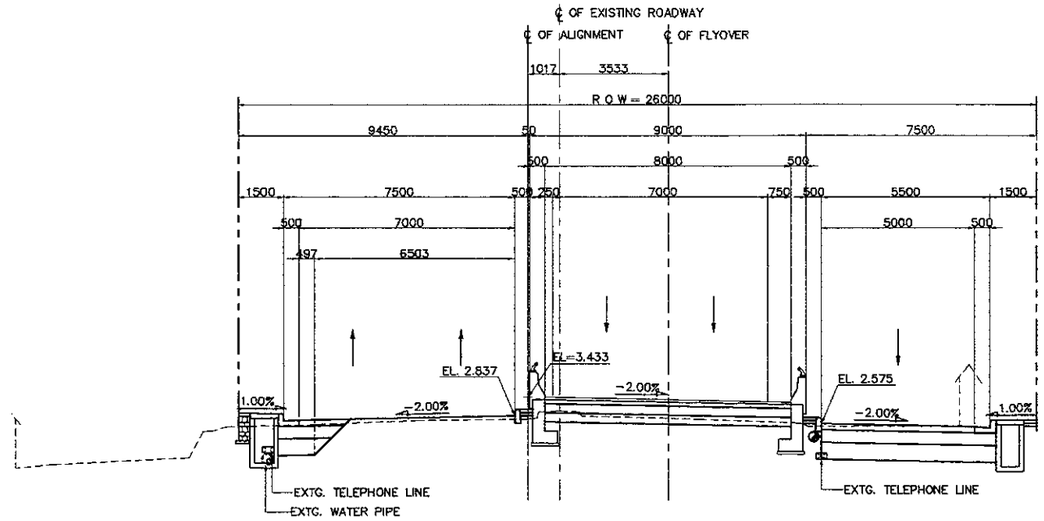

4 - SECTION (STA. 0 + 860.000)
SCALE 1:200

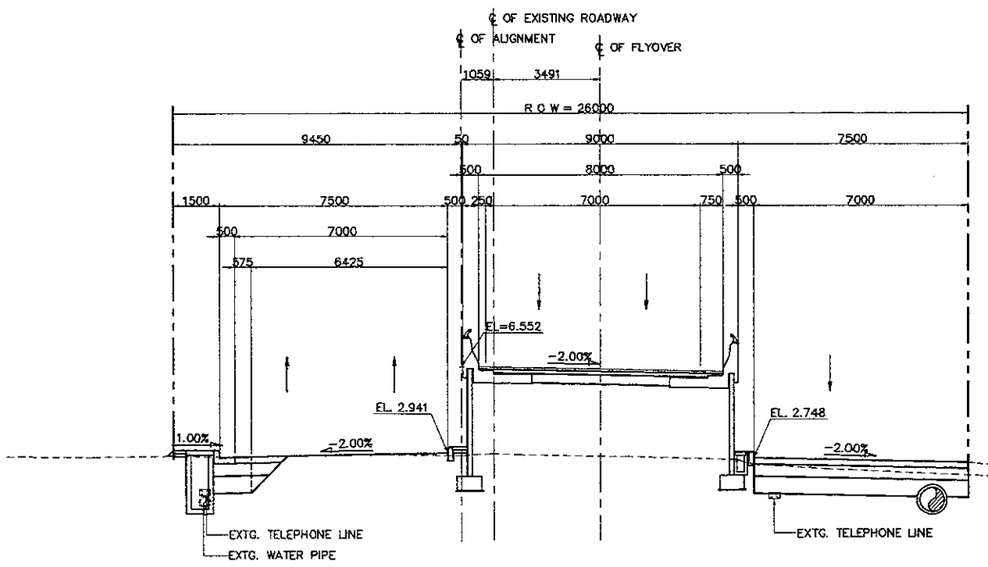

1 - SECTION (STA. 0 + 800.000)
SCALE 1:200

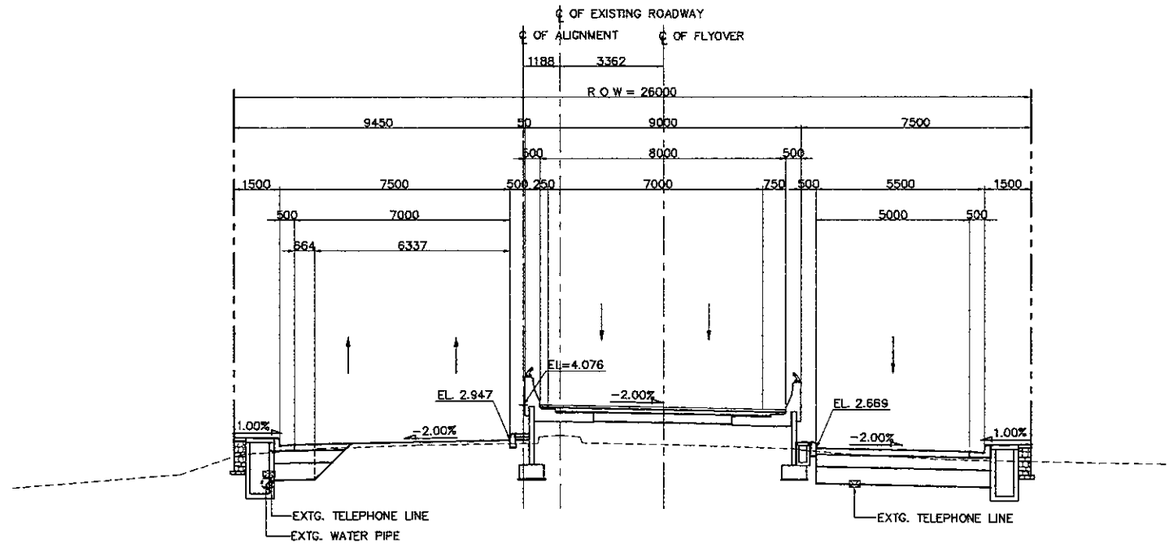

3 - SECTION (STA. 0 + 840.000)
SCALE 1:200

NOTES:

1. ALL DIMENSIONS AND ELEVATIONS SHALL BE VERIFIED DURING CONSTRUCTION.
2. LOCATION OF EXISTING UTILITIES SHALL BE VERIFIED PRIOR TO CONSTRUCTION.
3. FOR LOCATION AND INVERT ELEVATIONS OF DRAINAGE SYSTEM (DITCH AND RCP) REFER TO DRAINAGE DRAWINGS.

JAPAN INTERNATIONAL COOPERATION AGENCY KATAHIRA & ENGINEERS INTERNATIONAL	DESIGNED BY	CHECKED BY	SUBMITTED BY	REPUBLIC OF INDONESIA MINISTRY OF PUBLIC WORKS DIRECTORATE GENERAL OF HIGHWAYS	PROJECT AND LOCATION :	SCALE :	DRAWING TITLE :	DRAWING NO :
	Name R. UENO	Name T. OKUMURA	Name M. KIUCHI		DETAILED DESIGN STUDY OF NORTH JAVA CORRIDOR FLYOVER PROJECT GEBANG FLYOVER - CONTRACT PACKAGE 2 (NAGREG - GEBANG) WEST JAVA PROVINCE	1 : 200	CROSS SECTION STA. 0 + 880.000 - STA. 0 + 940.000 (12 OF 14)	GRD-042
	Sign	Sign	Sign	APPROVED BY Ir. HERRY VAZA M,Eng.Sc NIP. : 110038400		FULL SIZE A3		SHEET NO : 42 / 69
	Date	Date	Date	Sign / Date				

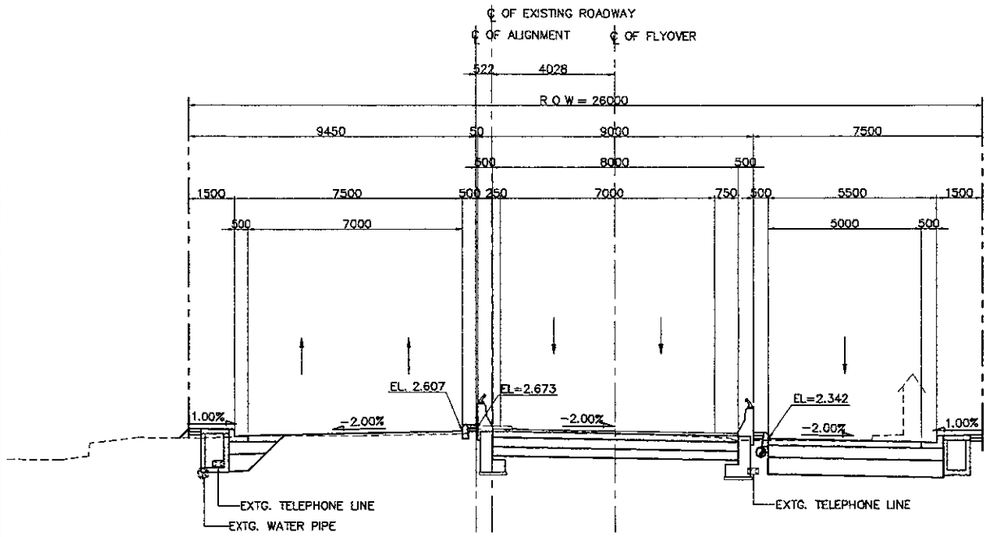

2 SECTION (STA. 0 + 900.000)
SCALE 1:200

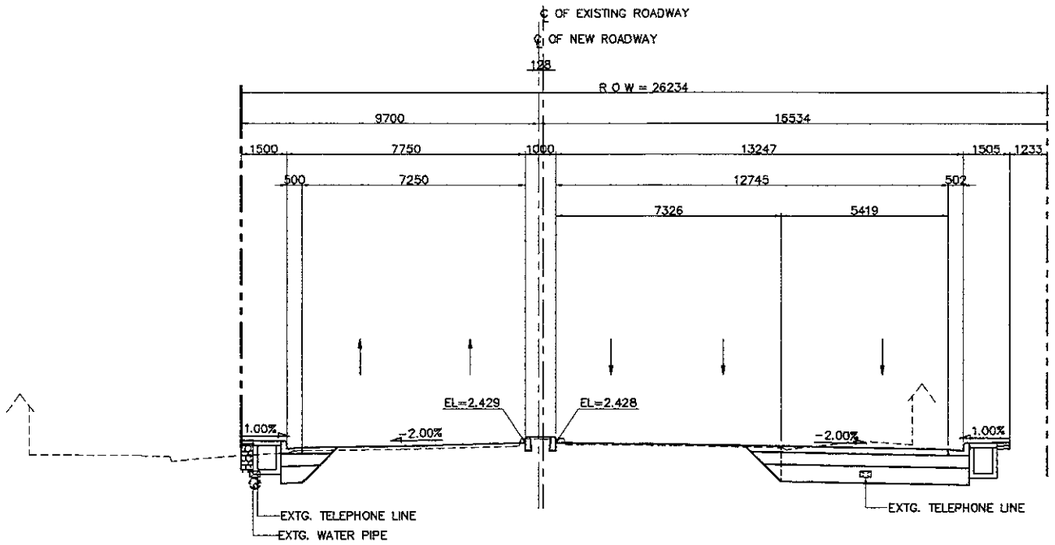

4 SECTION (STA. 0 + 940.000)
SCALE 1:200

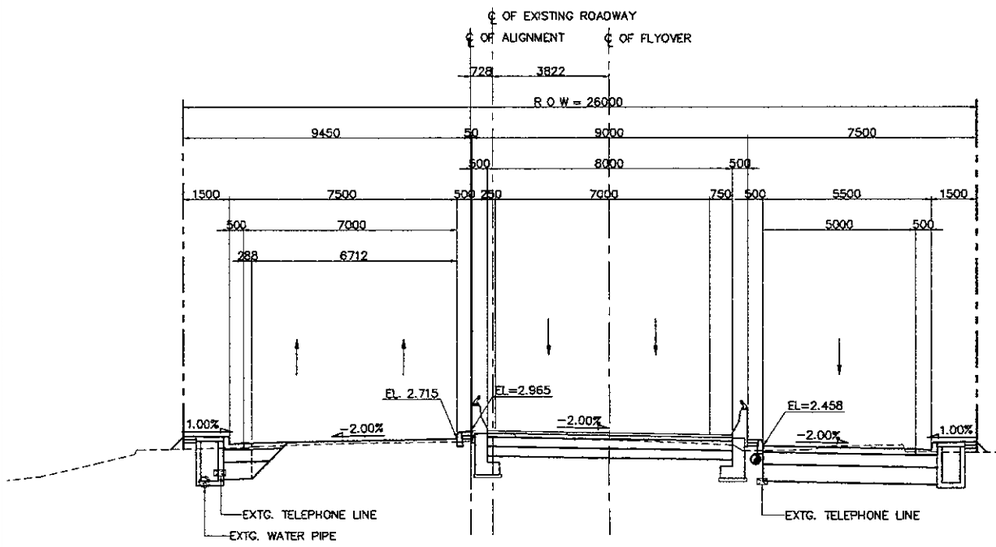

1 SECTION (STA. 0 + 880.000)
SCALE 1:200

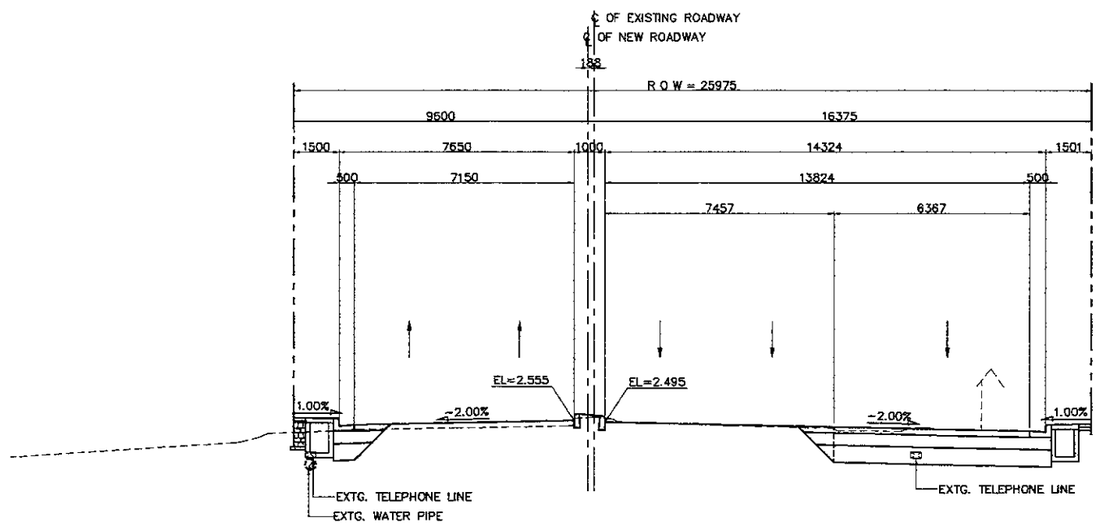

3 SECTION (STA. 0 + 920.000)
SCALE 1:200

NOTES:

1. ALL DIMENSIONS AND ELEVATIONS SHALL BE VERIFIED DURING CONSTRUCTION.
2. LOCATION OF EXISTING UTILITIES SHALL BE VERIFIED PRIOR TO CONSTRUCTION.
3. FOR LOCATION AND INVERT ELEVATIONS OF DRAINAGE SYSTEM (DITCH AND RCP) REFER TO DRAINAGE DRAWINGS.

JAPAN INTERNATIONAL COOPERATION AGENCY KATAHIRA & ENGINEERS INTERNATIONAL	DESIGNED BY	CHECKED BY	SUBMITTED BY	REPUBLIC OF INDONESIA MINISTRY OF PUBLIC WORKS DIRECTORATE GENERAL OF HIGHWAYS	PROJECT AND LOCATION :	SCALE :	DRAWING TITLE :	DRAWING NO :
	Name R. UENO	Name T. OKUMURA	Name M. KIUCHI		DETAILED DESIGN STUDY OF NORTH JAVA CORRIDOR FLYOVER PROJECT GEBANG FLYOVER - CONTRACT PACKAGE 2 (NAGREG - GEBANG) WEST JAVA PROVINCE	1 : 200	CROSS SECTION STA. 0 + 960.000 - STA. 1 + 020.000 (13 OF 14)	GRD-043
	Sign	Sign	Sign	APPROVED BY Ir. HERRY VAZA M,Eng.Sc Sign NIP. : 110038400 Date		FULL SIZE A3		SHEET NO : 43 / 69
	Date	Date	Date					

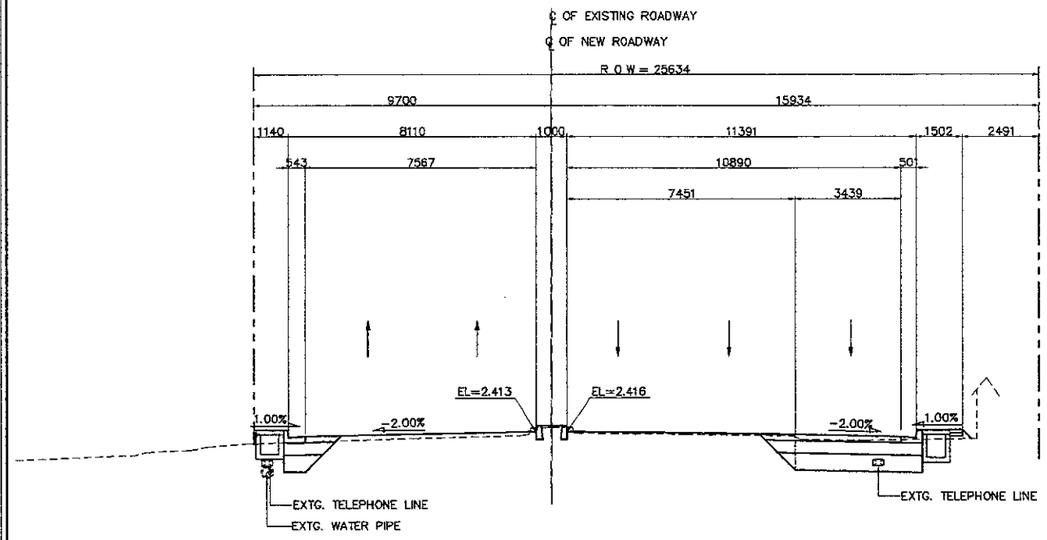

2 SECTION (STA. 0 + 980.000)
SCALE 1:200

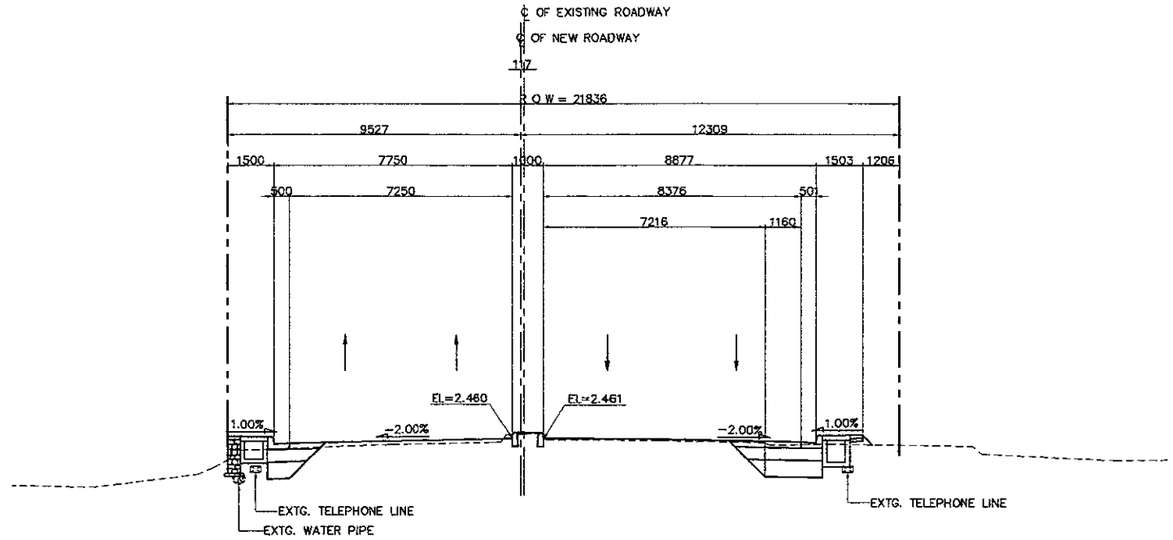

4 SECTION (STA. 1 + 020.000)
SCALE 1:200

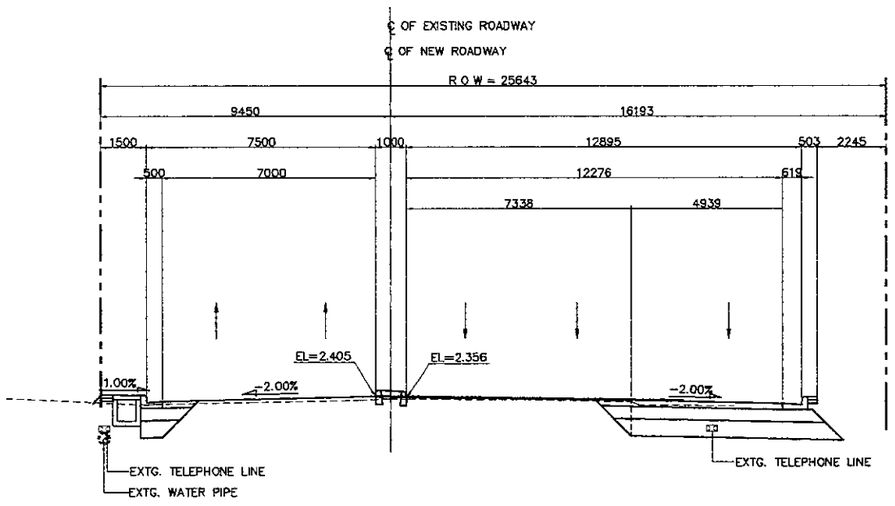

1 SECTION (STA. 0 + 960.000)
SCALE 1:200

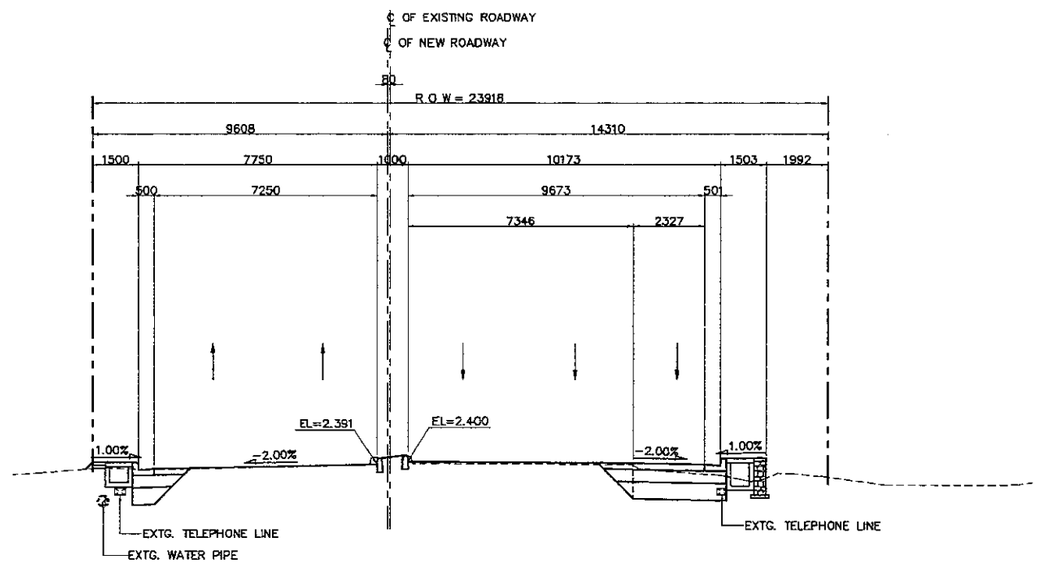

3 SECTION (STA. 1 + 000.000)
SCALE 1:200

NOTES:

1. ALL DIMENSIONS AND ELEVATIONS SHALL BE VERIFIED DURING CONSTRUCTION.
2. LOCATION OF EXISTING UTILITIES SHALL BE VERIFIED PRIOR TO CONSTRUCTION.
3. FOR LOCATION AND INVERT ELEVATIONS OF DRAINAGE SYSTEM (DITCH AND RCP) REFER TO DRAINAGE DRAWINGS.

JAPAN INTERNATIONAL COOPERATION AGENCY KATAHIRA & ENGINEERS INTERNATIONAL	DESIGNED BY	CHECKED BY	SUBMITTED BY	REPUBLIC OF INDONESIA MINISTRY OF PUBLIC WORKS DIRECTORATE GENERAL OF HIGHWAYS	PROJECT AND LOCATION :	SCALE :	DRAWING TITLE :	DRAWING NO :
	Name: R. UENO	Name: T. OKUMURA	Name: M. KIUCHI		DETAILED DESIGN STUDY OF NORTH JAVA CORRIDOR FLYOVER PROJECT GEBANG FLYOVER - CONTRACT PACKAGE 2 (NAGREG - GEBANG) WEST JAVA PROVINCE	1 : 200	CROSS SECTION STA. 1 + 040.000 - STA. 1 + 060.000 (14 OF 14)	GRD-044
	Sign	Sign	Sign	APPROVED BY: Ir. HERRY VAZA M,Eng.Sc NIP. : 110038400				SHEET NO :
	Date	Date	Date	Sign / Date		FULL SIZE A3		44 / 69

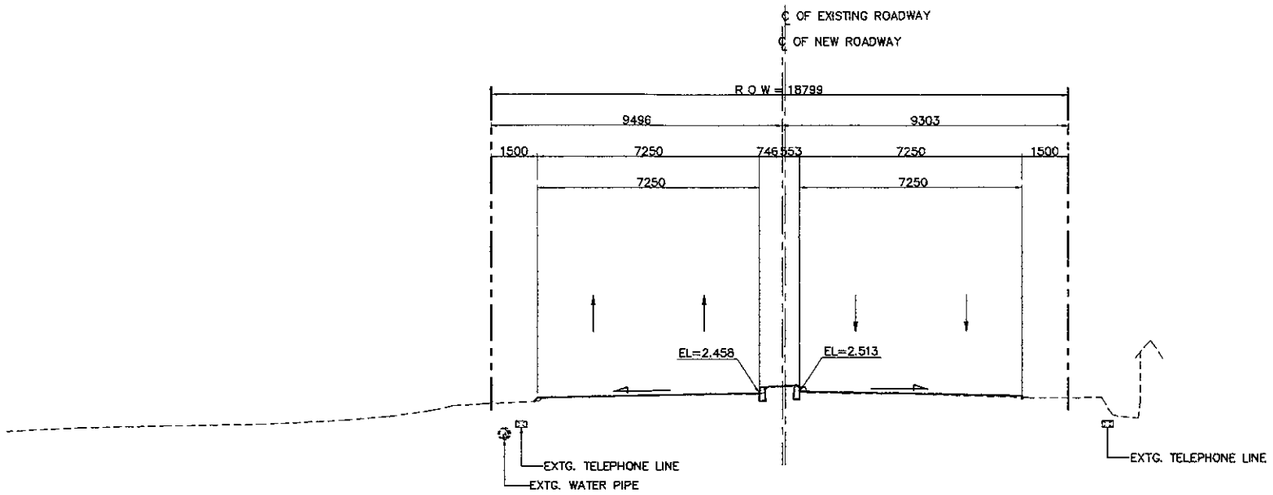

2 / - SECTION (STA. 1 + 060.000)
SCALE 1:200

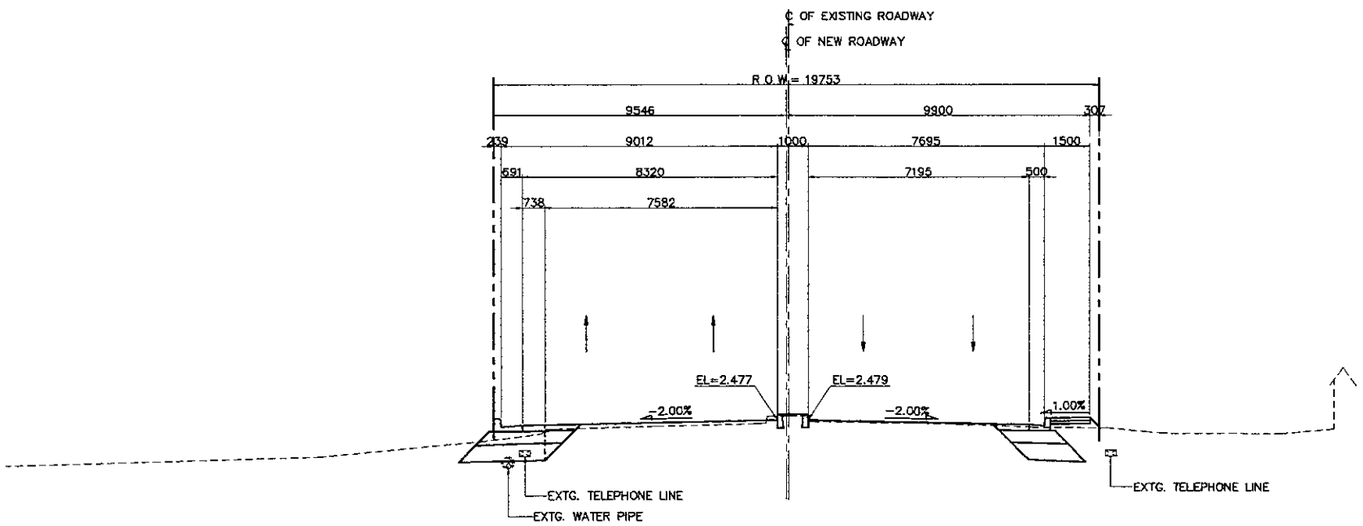

1 / - SECTION (STA. 1 + 040.000)
SCALE 1:200

NOTES:

1. ALL DIMENSIONS AND ELEVATIONS SHALL BE VERIFIED DURING CONSTRUCTION.
2. LOCATION OF EXISTING UTILITIES SHALL BE VERIFIED PRIOR TO CONSTRUCTION.
3. FOR LOCATION AND INVERT ELEVATIONS OF DRAINAGE SYSTEM (DITCH AND RCP) REFER TO DRAINAGE DRAWINGS.

JAPAN INTERNATIONAL COOPERATION AGENCY KATAHIRA & ENGINEERS INTERNATIONAL	DESIGNED BY	CHECKED BY	SUBMITTED BY	REPUBLIC OF INDONESIA MINISTRY OF PUBLIC WORKS DIRECTORATE GENERAL OF HIGHWAYS	PROJECT AND LOCATION :	SCALE :	DRAWING TITLE :	DRAWING NO :
	Name R. UENO	Name T. OKUMURA	Name M. KIUCHI		DETAILED DESIGN STUDY OF NORTH JAVA CORRIDOR FLYOVER PROJECT GEBANG FLYOVER - CONTRACT PACKAGE 2 (NAGREG - GEBANG) WEST JAVA PROVINCE	1 : 200	CROSS SECTION AT ABUTMENT AND PIER LOCATION (1 OF 9)	GRD-045
	Sign	Sign	Sign	APPROVED BY Ir. HERRY VAZA M,Eng.Sc Sign NIP. : 110038400 Date		FULL SIZE A3		SHEET NO : 45 / 69
	Date	Date	Date					

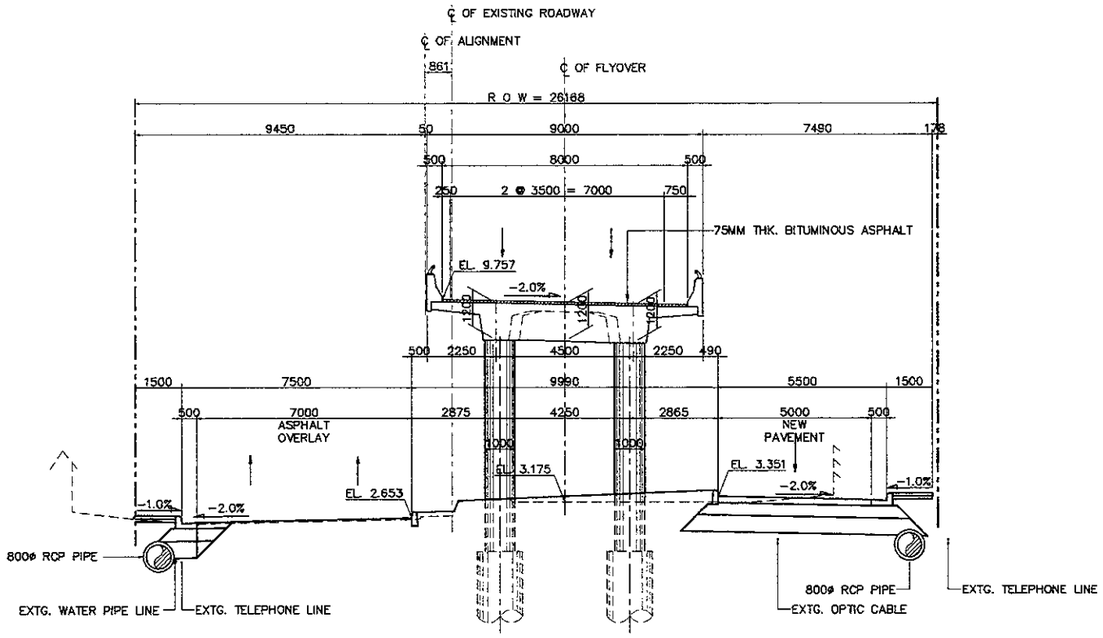

2 - P1 SECTION (STA. 0 + 336.00)
SCALE 1:200

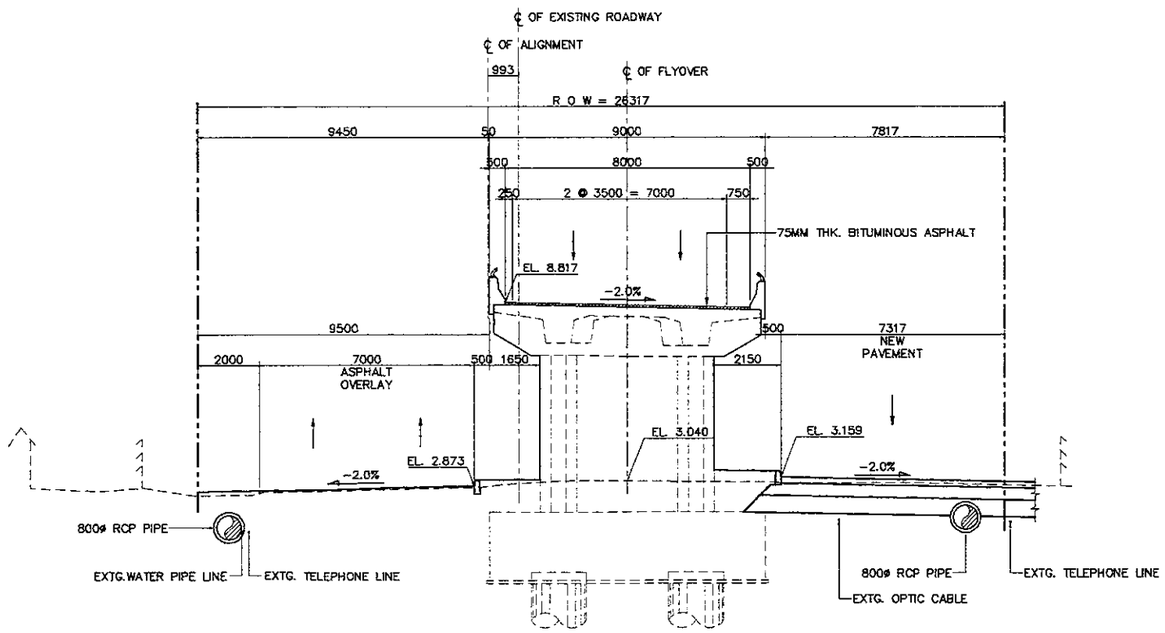

1 - A1 SECTION (STA. 0 + 316.00)
SCALE 1:200

NOTES:

1. ALL DIMENSIONS AND ELEVATIONS SHALL BE VERIFIED DURING CONSTRUCTION.
2. LOCATION OF EXISTING UTILITIES SHALL BE VERIFIED PRIOR TO CONSTRUCTION.
3. FOR LOCATION AND INVERT ELEVATIONS OF DRAINAGE SYSTEM (DITCH AND RCP) REFER TO DRAINAGE DRAWINGS.

JAPAN INTERNATIONAL COOPERATION AGENCY KATAHIRA & ENGINEERS INTERNATIONAL	DESIGNED BY	CHECKED BY	SUBMITTED BY	REPUBLIC OF INDONESIA MINISTRY OF PUBLIC WORKS DIRECTORATE GENERAL OF HIGHWAYS	PROJECT AND LOCATION :	SCALE :	DRAWING TITLE :	DRAWING NO :
	Name R. UENO	Name T. OKUMURA	Name M. KIUCHI		DETAILED DESIGN STUDY OF NORTH JAVA CORRIDOR FLYOVER PROJECT GEBANG FLYOVER - CONTRACT PACKAGE 2 (NAGREG - GEBANG) WEST JAVA PROVINCE	1 : 200	CROSS SECTION AT ABUTMENT AND PIER LOCATION (2 OF 9)	GRD-046
	Sign	Sign	Sign	APPROVED BY Ir. HERRY VAZA M,Eng.Sc Sign NIP. : 110038400 Date				SHEET NO :
	Date	Date	Date			FULL SIZE A3		46 / 69

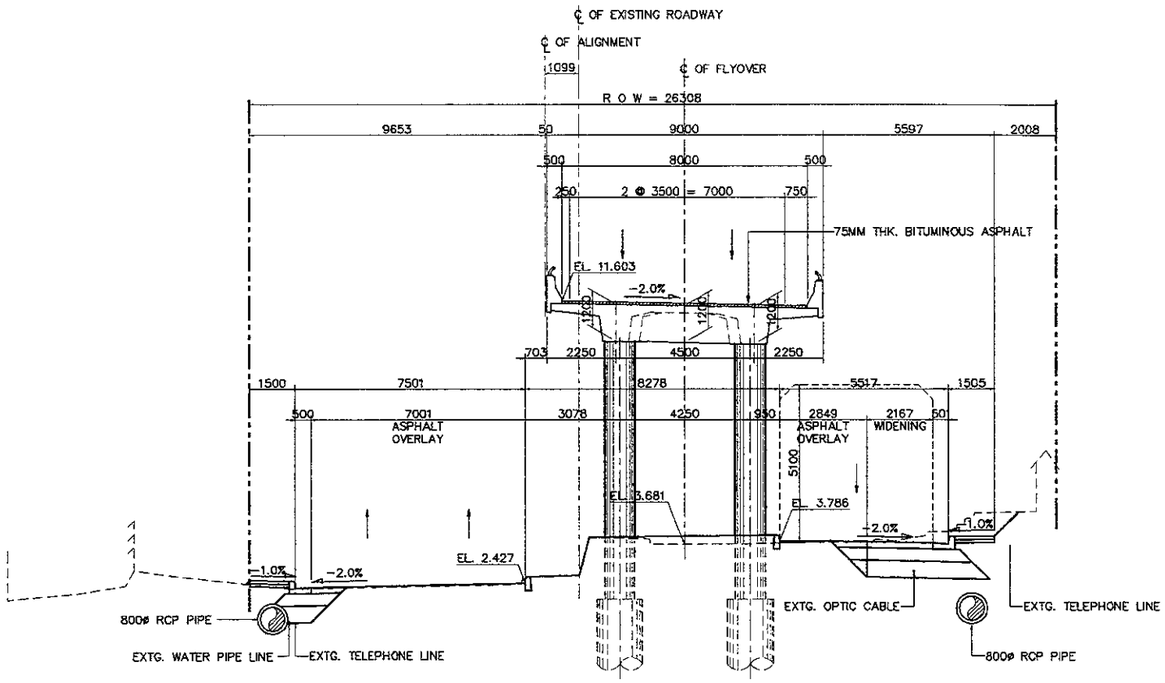

2 - P3 SECTION (STA. 0 + 376.00)
SCALE 1:200

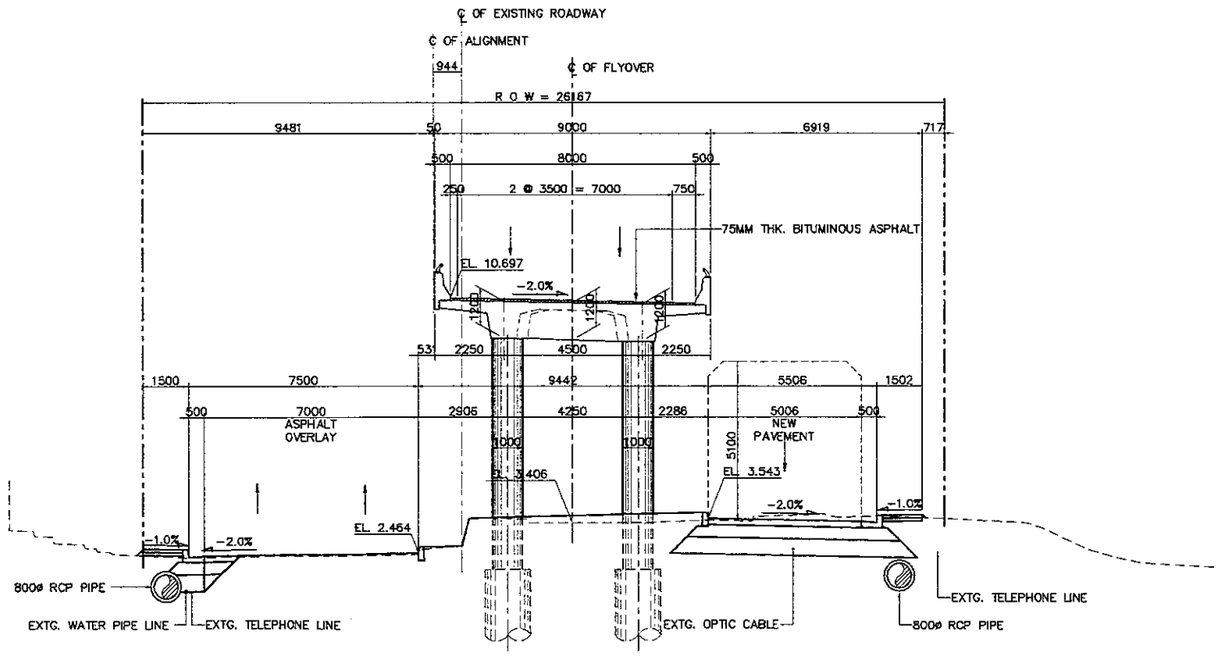

1 - P2 SECTION (STA. 0 + 356.00)
SCALE 1:200

NOTES:

1. ALL DIMENSIONS AND ELEVATIONS SHALL BE VERIFIED DURING CONSTRUCTION.
2. LOCATION OF EXISTING UTILITIES SHALL BE VERIFIED PRIOR TO CONSTRUCTION.
3. FOR LOCATION AND INVERT ELEVATIONS OF DRAINAGE SYSTEM (DITCH AND RCP) REFER TO DRAINAGE DRAWINGS.

JAPAN INTERNATIONAL COOPERATION AGENCY KATAHIRA & ENGINEERS INTERNATIONAL	DESIGNED BY	CHECKED BY	SUBMITTED BY	REPUBLIC OF INDONESIA MINISTRY OF PUBLIC WORKS DIRECTORATE GENERAL OF HIGHWAYS	PROJECT AND LOCATION :	SCALE :	DRAWING TITLE :	DRAWING NO :
	Name R. UENO	Name T. OKUMURA	Name M. KIUCHI		DETAILED DESIGN STUDY OF NORTH JAVA CORRIDOR FLYOVER PROJECT GEBANG FLYOVER - CONTRACT PACKAGE 2 (NAGREG - GEBANG) WEST JAVA PROVINCE	1 : 200	CROSS SECTION AT ABUTMENT AND PIER LOCATION (3 OF 9)	GRD-047
	Sign	Sign	Sign	APPROVED BY ir. HERRY VAZA M,Eng.Sc Sign NIP. : 110038400 Date		FULL SIZE A3		SHEET NO : 47 / 69
	Date	Date	Date					

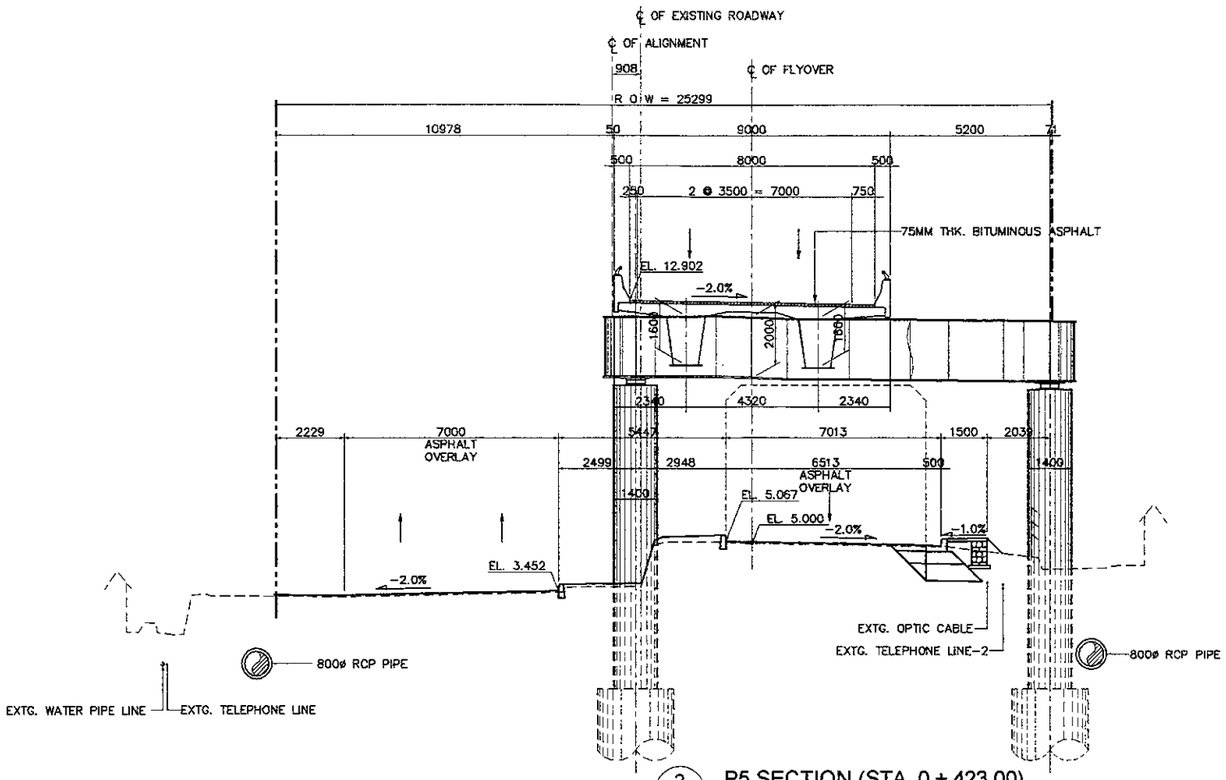

2 - P5 SECTION (STA. 0 + 423.00)
SCALE 1:200

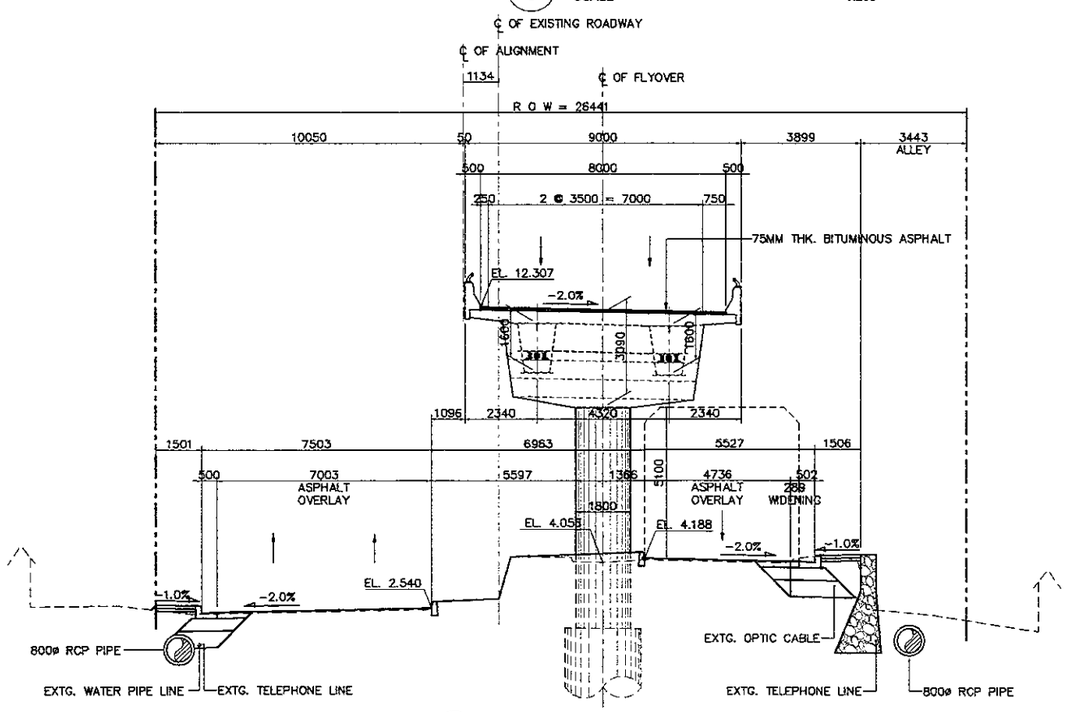

1 - P4 SECTION (STA. 0 + 396.00)
SCALE 1:200

NOTES:

1. ALL DIMENSIONS AND ELEVATIONS SHALL BE VERIFIED DURING CONSTRUCTION.
2. LOCATION OF EXISTING UTILITIES SHALL BE VERIFIED PRIOR TO CONSTRUCTION.
3. FOR LOCATION AND INVERT ELEVATIONS OF DRAINAGE SYSTEM (DITCH AND RCP) REFER TO DRAINAGE DRAWINGS.

JAPAN INTERNATIONAL COOPERATION AGENCY KATAHIRA & ENGINEERS INTERNATIONAL	DESIGNED BY	CHECKED BY	SUBMITTED BY	REPUBLIC OF INDONESIA MINISTRY OF PUBLIC WORKS DIRECTORATE GENERAL OF HIGHWAYS	PROJECT AND LOCATION :	SCALE :	DRAWING TITLE :	DRAWING NO :
	Name: R. UENO	Name: T. OKUMURA	Name: M. KIUCHI		DETAILED DESIGN STUDY OF NORTH JAVA CORRIDOR FLYOVER PROJECT GEBANG FLYOVER - CONTRACT PACKAGE 2 (NAGREG - GEBANG) WEST JAVA PROVINCE	1 : 200	CROSS SECTION AT ABUTMENT AND PIER LOCATION (4 OF 9)	GRD-048
	Sign	Sign	Sign	APPROVED BY: Ir. HERRY VAZA M,Eng.Sc; NIP. : 110038400; Sign		FULL SIZE A3		SHEET NO : 48 / 69
	Date	Date	Date	Date				

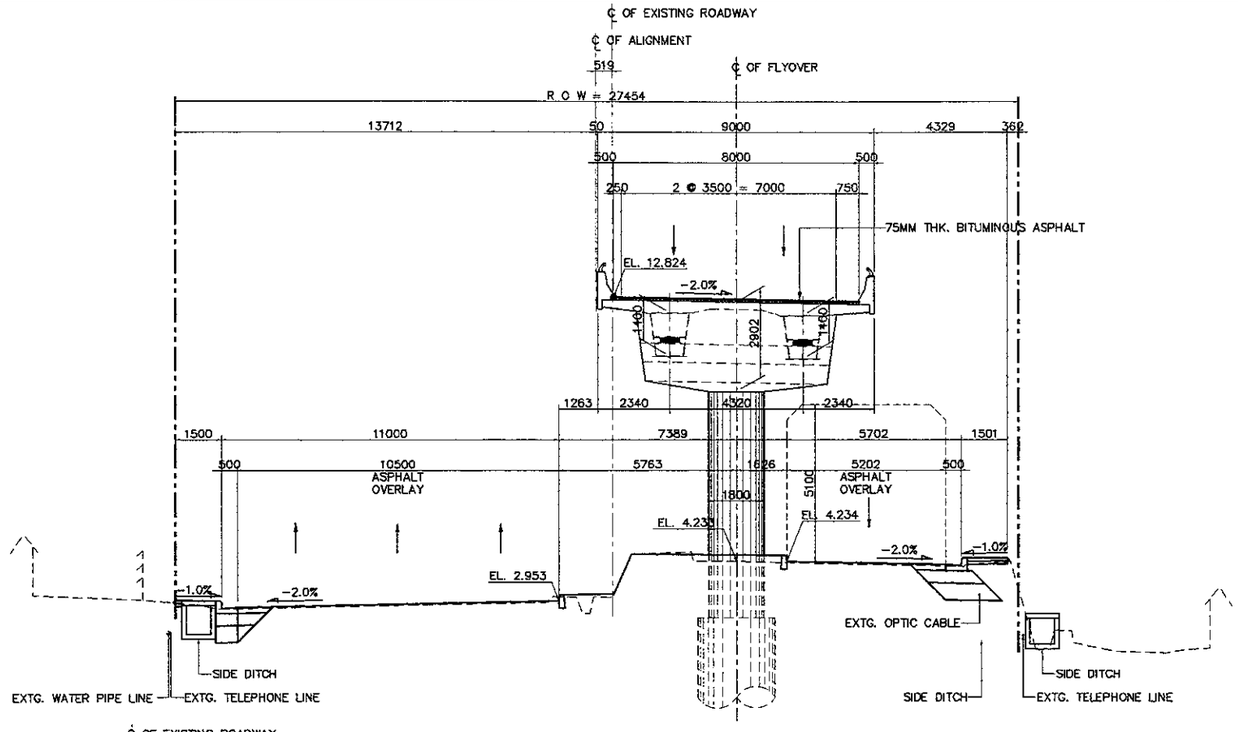

2 - P7 SECTION (STA. 0 + 486.00)
SCALE 1:200

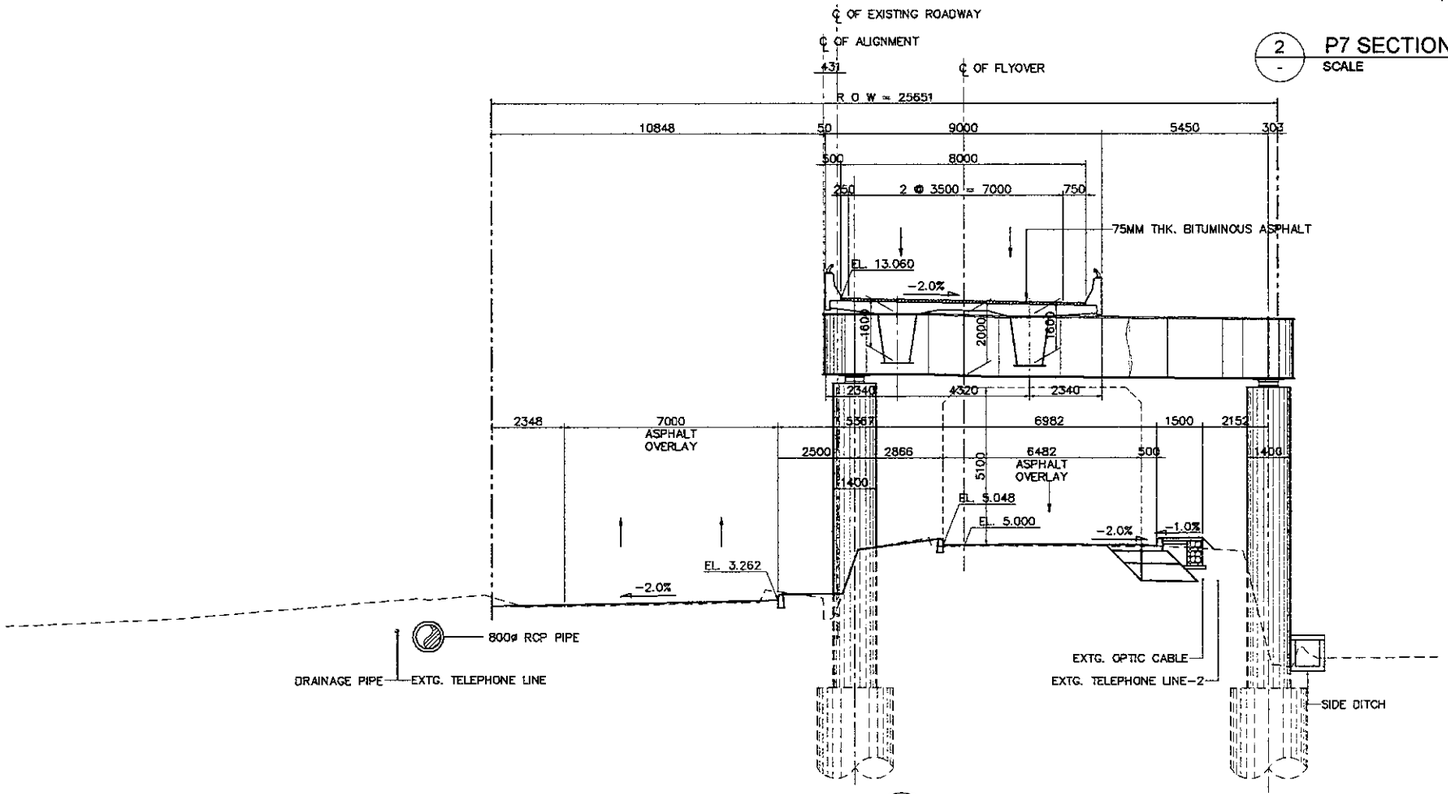

1 - P6 SECTION (STA. 0 + 459.00)
SCALE 1:200

NOTES:

1. ALL DIMENSIONS AND ELEVATIONS SHALL BE VERIFIED DURING CONSTRUCTION.
2. LOCATION OF EXISTING UTILITIES SHALL BE VERIFIED PRIOR TO CONSTRUCTION.
3. FOR LOCATION AND INVERT ELEVATIONS OF DRAINAGE SYSTEM (DITCH AND RCP) REFER TO DRAINAGE DRAWINGS.

JAPAN INTERNATIONAL COOPERATION AGENCY KATAHIRA & ENGINEERS INTERNATIONAL	DESIGNED BY	CHECKED BY	SUBMITTED BY	REPUBLIC OF INDONESIA MINISTRY OF PUBLIC WORKS DIRECTORATE GENERAL OF HIGHWAYS	PROJECT AND LOCATION :	SCALE :	DRAWING TITLE :	DRAWING NO :
	Name R. UENO	Name T. OKUMURA	Name M. KIUCHI		DETAILED DESIGN STUDY OF NORTH JAVA CORRIDOR FLYOVER PROJECT GEBANG FLYOVER - CONTRACT PACKAGE 2 (NAGREG - GEBANG) WEST JAVA PROVINCE	1 : 200	CROSS SECTION AT ABUTMENT AND PIER LOCATION (5 OF 9)	GRD-049
	Sign	Sign	Sign	APPROVED BY Ir. HERRY VAZA M.Eng.Sc Sign				SHEET NO :
	Date	Date	Date	N/P. : 110038400 Date		FULL SIZE A3		49 / 69

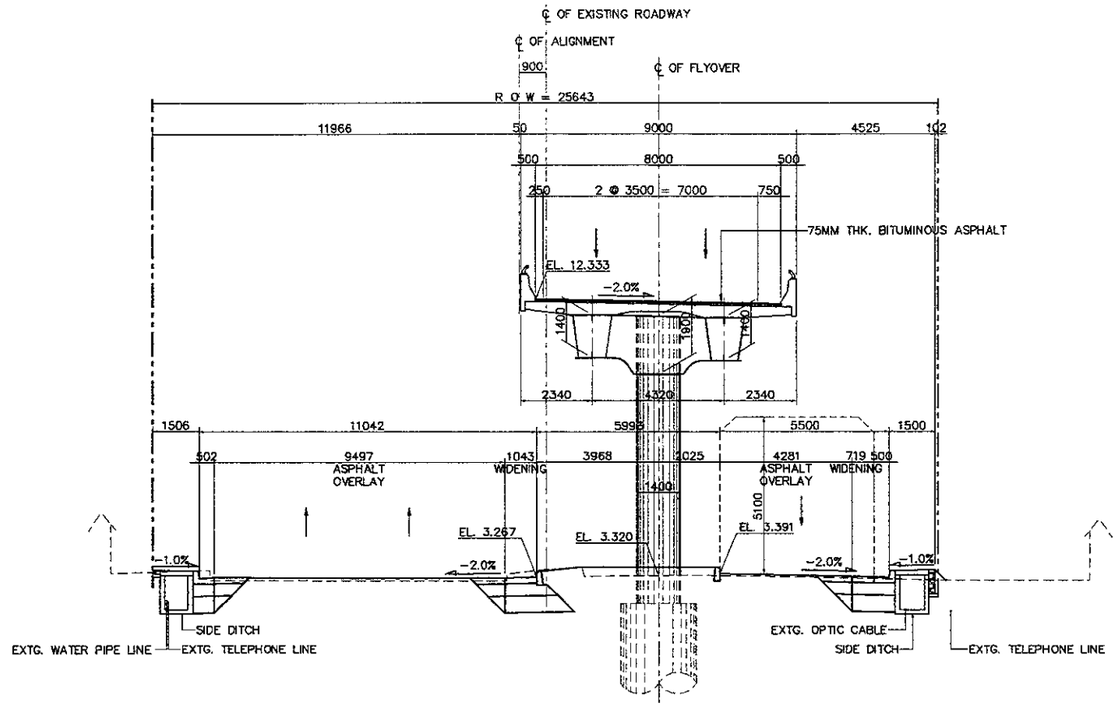

2 P9 SECTION (STA. 0 + 540.00)
SCALE 1:200

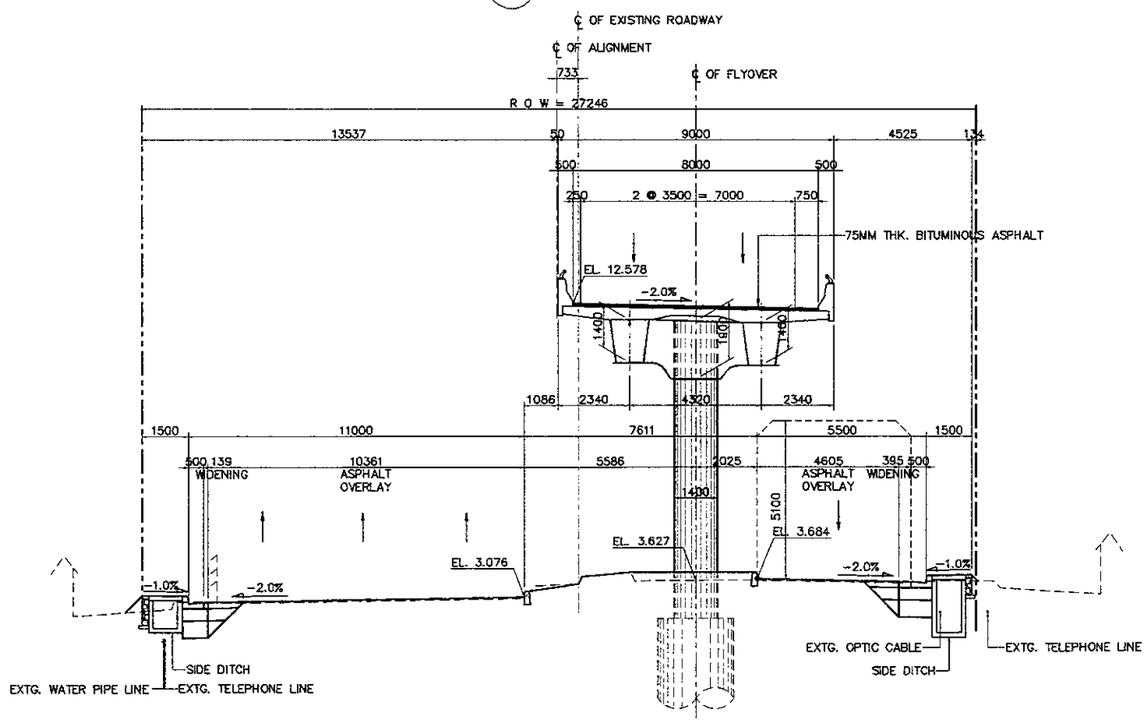

1 P8 SECTION (STA. 0 + 513.00)
SCALE 1:200

NOTES:

1. ALL DIMENSIONS AND ELEVATIONS SHALL BE VERIFIED DURING CONSTRUCTION.
2. LOCATION OF EXISTING UTILITIES SHALL BE VERIFIED PRIOR TO CONSTRUCTION.
3. FOR LOCATION AND INVERT ELEVATIONS OF DRAINAGE SYSTEM (DITCH AND RCP) REFER TO DRAINAGE DRAWINGS.

JAPAN INTERNATIONAL COOPERATION AGENCY KATAHIRA & ENGINEERS INTERNATIONAL	DESIGNED BY	CHECKED BY	SUBMITTED BY	REPUBLIC OF INDONESIA MINISTRY OF PUBLIC WORKS DIRECTORATE GENERAL OF HIGHWAYS	PROJECT AND LOCATION :	SCALE :	DRAWING TITLE :	DRAWING NO :
	Name R. UENO	Name T. OKUMURA	Name M. KIUCHI		DETAILED DESIGN STUDY OF NORTH JAVA CORRIDOR FLYOVER PROJECT GEBANG FLYOVER - CONTRACT PACKAGE 2 (NAGREG - GEBANG) WEST JAVA PROVINCE	1 : 200	CROSS SECTION AT ABUTMENT AND PIER LOCATION (6 OF 9)	GRD-050
	Sign	Sign	Sign	APPROVED BY Ir. HERRY VAZA M,Eng.Sc NIP. : 110038400 Sign				SHEET NO :
	Date	Date	Date	Date		FULL SIZE A3		50 / 69

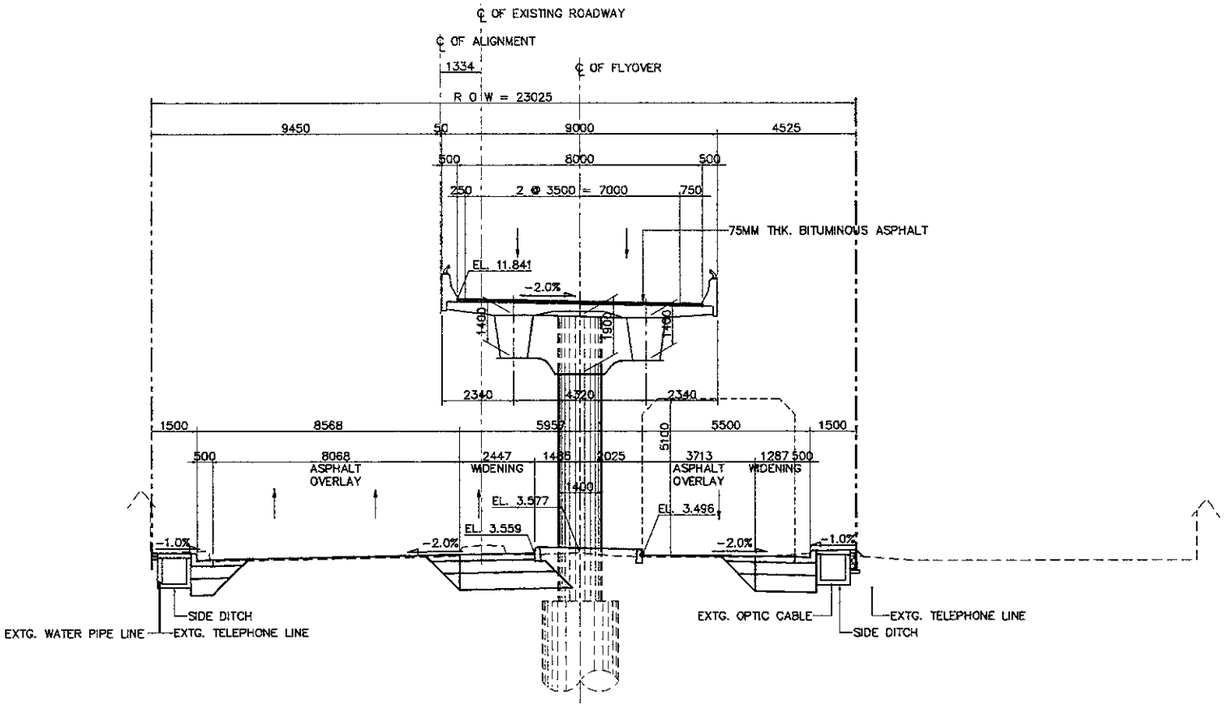

2 - P11 SECTION (STA. 0 + 594.00)
SCALE 1:200

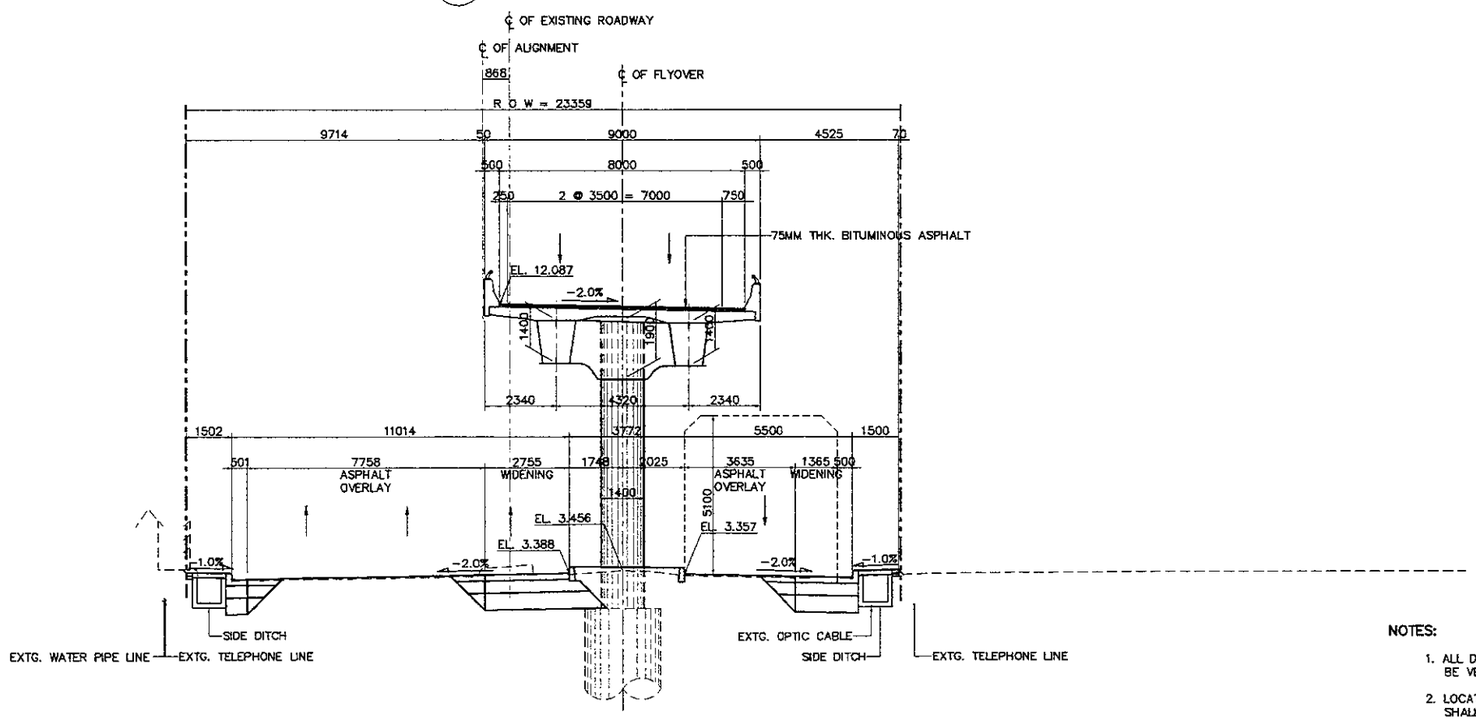

1 - P10 SECTION (STA. 0 + 567.00)
SCALE 1:200

NOTES:

1. ALL DIMENSIONS AND ELEVATIONS SHALL BE VERIFIED DURING CONSTRUCTION.
2. LOCATION OF EXISTING UTILITIES SHALL BE VERIFIED PRIOR TO CONSTRUCTION.
3. FOR LOCATION AND INVERT ELEVATIONS OF DRAINAGE SYSTEM (DITCH AND RCP) REFER TO DRAINAGE DRAWINGS.

JAPAN INTERNATIONAL COOPERATION AGENCY / KATAHIRA & ENGINEERS INTERNATIONAL	DESIGNED BY	CHECKED BY	SUBMITTED BY	REPUBLIC OF INDONESIA MINISTRY OF PUBLIC WORKS DIRECTORATE GENERAL OF HIGHWAYS	PROJECT AND LOCATION :	SCALE :	DRAWING TITLE :	DRAWING NO :
	Name R. UENO	Name T. OKUMURA	Name M. KIUCHI		DETAILED DESIGN STUDY OF NORTH JAVA CORRIDOR FLYOVER PROJECT GEBANG FLYOVER - CONTRACT PACKAGE 2 (NAGREG - GEBANG) WEST JAVA PROVINCE	1 : 200	CROSS SECTION AT ABUTMENT AND PIER LOCATION (7 OF 9)	GRD-051
	Sign	Sign	Sign	APPROVED BY Ir. HERRY VAZA M,Eng.Sc NIP. : 110038400 Sign		FULL SIZE A3		SHEET NO : 51 /69
	Date	Date	Date	Date				

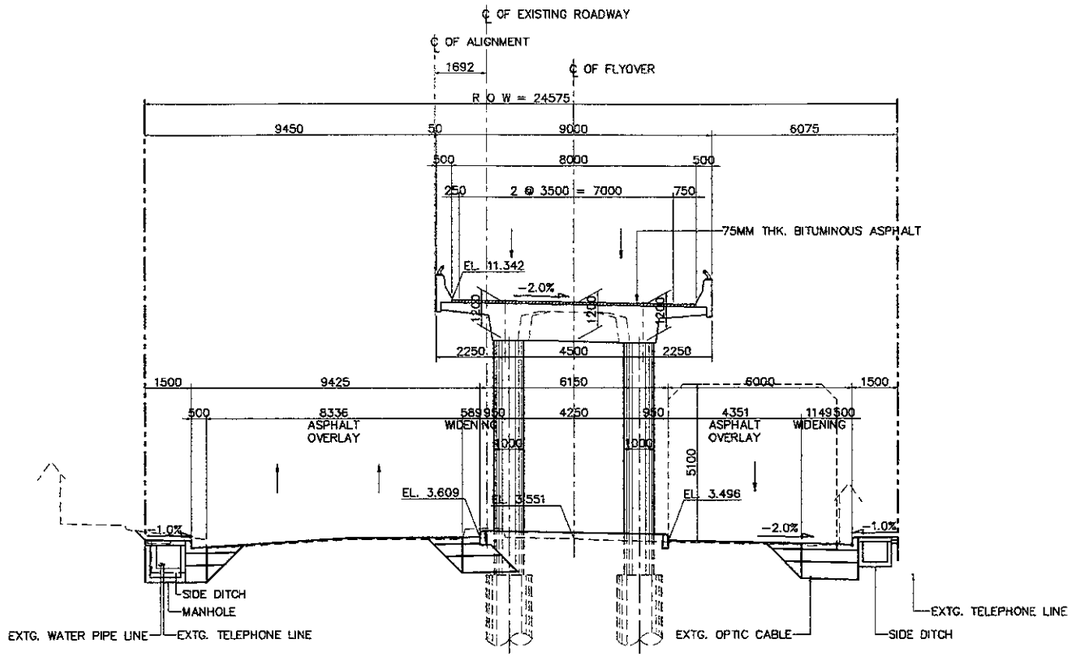

2 - P13 SECTION (STA. 0 + 641.00)
SCALE 1:200

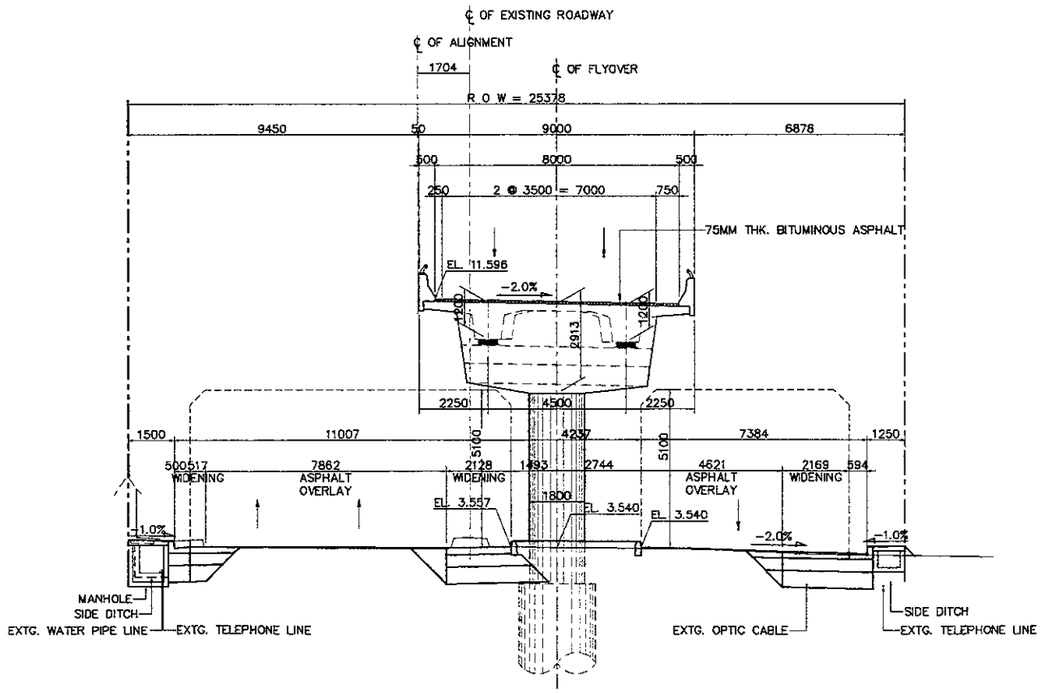

1 - P12 SECTION (STA. 0 + 621.00)
SCALE 1:200

NOTES:

1. ALL DIMENSIONS AND ELEVATIONS SHALL BE VERIFIED DURING CONSTRUCTION.
2. LOCATION OF EXISTING UTILITIES SHALL BE VERIFIED PRIOR TO CONSTRUCTION.
3. FOR LOCATION AND INVERT ELEVATIONS OF DRAINAGE SYSTEM (DITCH AND RCP) REFER TO DRAINAGE DRAWINGS.

JAPAN INTERNATIONAL COOPERATION AGENCY / KATAHIRA & ENGINEERS INTERNATIONAL	DESIGNED BY	CHECKED BY	SUBMITTED BY	REPUBLIC OF INDONESIA MINISTRY OF PUBLIC WORKS DIRECTORATE GENERAL OF HIGHWAYS	PROJECT AND LOCATION :	SCALE :	DRAWING TITLE :	DRAWING NO :
	Name R. UENO	Name T. OKUMURA	Name M. KIUCHI		DETAILED DESIGN STUDY OF NORTH JAVA CORRIDOR FLYOVER PROJECT GEBANG FLYOVER - CONTRACT PACKAGE 2 (NAGREG - GEBANG) WEST JAVA PROVINCE	1 : 200	CROSS SECTION AT ABUTMENT AND PIER LOCATION (8 OF 9)	GRD-052
	Sign	Sign	Sign	APPROVED BY Ir. HERRY VAZA M,Eng.Sc / NIP. : 110038400 / Sign				SHEET NO :
	Date	Date	Date	Date		FULL SIZE A3		52 / 69

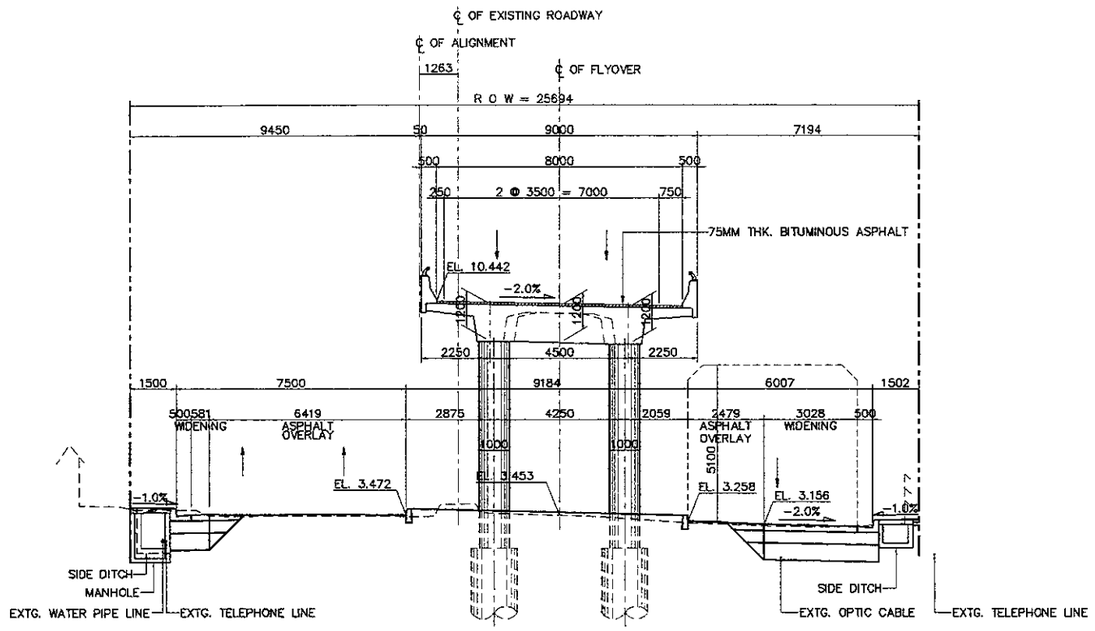

2 P15 SECTION (STA. 0 + 681.00)
SCALE 1:200

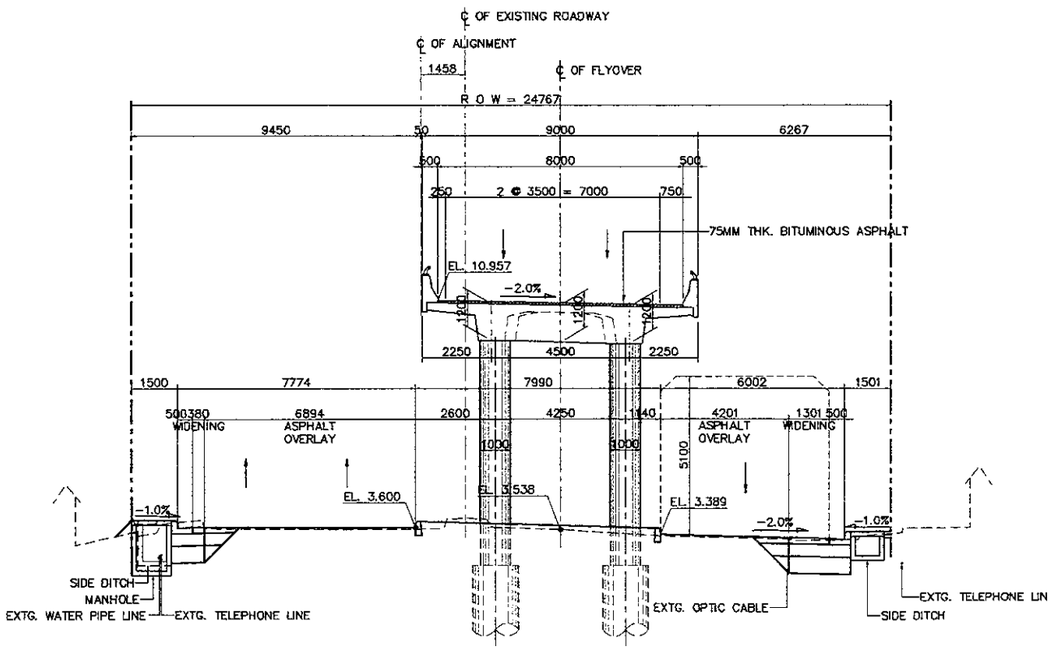

1 P14 SECTION (STA. 0 + 661.00)
SCALE 1:200

NOTES:

1. ALL DIMENSIONS AND ELEVATIONS SHALL BE VERIFIED DURING CONSTRUCTION.
2. LOCATION OF EXISTING UTILITIES SHALL BE VERIFIED PRIOR TO CONSTRUCTION.
3. FOR LOCATION AND INVERT ELEVATIONS OF DRAINAGE SYSTEM (DITCH AND RCP) REFER TO DRAINAGE DRAWINGS.

JAPAN INTERNATIONAL COOPERATION AGENCY KATAHIRA & ENGINEERS INTERNATIONAL	DESIGNED BY	CHECKED BY	SUBMITTED BY	REPUBLIC OF INDONESIA MINISTRY OF PUBLIC WORKS DIRECTORATE GENERAL OF HIGHWAYS	PROJECT AND LOCATION :	SCALE :	DRAWING TITLE :	DRAWING NO :
	Name R. UENO	Name T. OKUMURA	Name M. KIUCHI		DETAILED DESIGN STUDY OF NORTH JAVA CORRIDOR FLYOVER PROJECT GEBANG FLYOVER - CONTRACT PACKAGE 2 (NAGREG - GEBANG) WEST JAVA PROVINCE	1 : 200	CROSS SECTION AT ABUTMENT AND PIER LOCATION (9 OF 9)	GRD-053
	Sign	Sign	Sign	APPROVED BY Ir. HERRY VAZA M,Eng.Sc Sign NIP. : 110038400 Date		FULL SIZE A3		SHEET NO : 53 / 69
	Date	Date	Date					

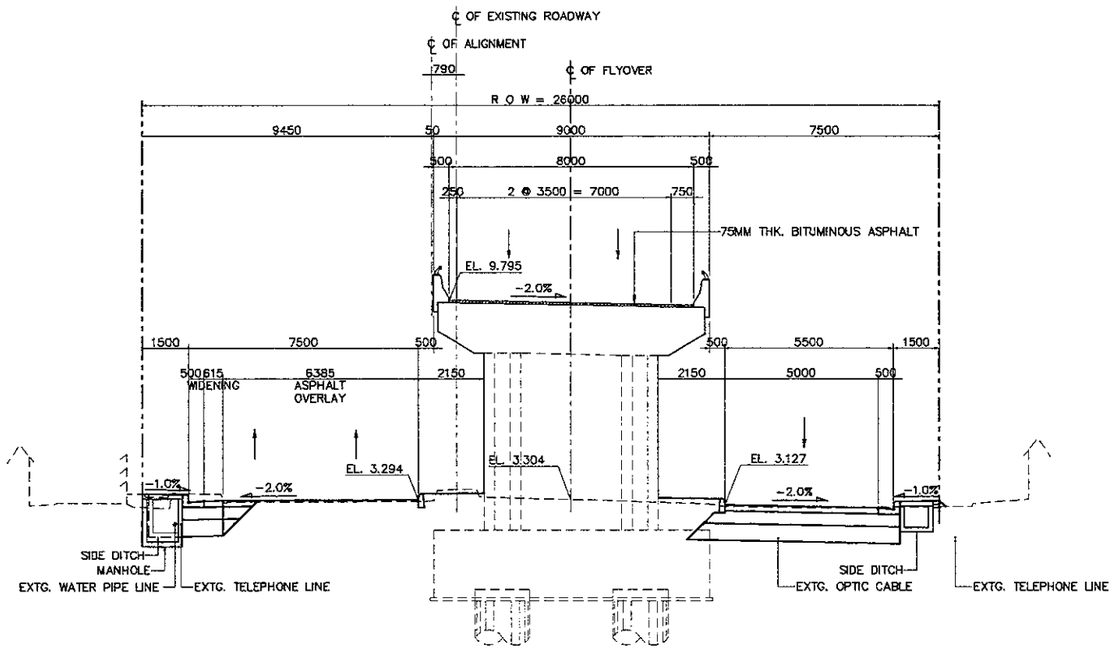

1 / - A2 SECTION (STA. 0 + 701.00)
SCALE 1:200

NOTES:

1. ALL DIMENSIONS AND ELEVATIONS SHALL BE VERIFIED DURING CONSTRUCTION.
2. LOCATION OF EXISTING UTILITIES SHALL BE VERIFIED PRIOR TO CONSTRUCTION.
3. FOR LOCATION AND INVERT ELEVATIONS OF DRAINAGE SYSTEM (DITCH AND RCP) REFER TO DRAINAGE DRAWINGS.

JAPAN INTERNATIONAL COOPERATION AGENCY KATAHIRA & ENGINEERS INTERNATIONAL	DESIGNED BY	CHECKED BY	SUBMITTED BY	REPUBLIC OF INDONESIA MINISTRY OF PUBLIC WORKS DIRECTORATE GENERAL OF HIGHWAYS	PROJECT AND LOCATION :	SCALE :	DRAWING TITLE :	DRAWING NO :
	Name: R. UENO	Name: T. OKUMURA	Name: M. KIUCHI		DETAILED DESIGN STUDY OF NORTH JAVA CORRIDOR FLYOVER PROJECT GEBANG FLYOVER - CONTRACT PACKAGE 2 (NAGREG - GEBANG) WEST JAVA PROVINCE	1 : 1000	RIGHT-OF-WAY PLAN 1 OF 4	GRD-054
	Sign	Sign	Sign	APPROVED BY: Ir. HERRY VAZA M,Eng.Sc NIP. : 110003840D				SHEET NO : 54 / 69
	Date	Date	Date	Sign / Date		FULL SIZE A3		

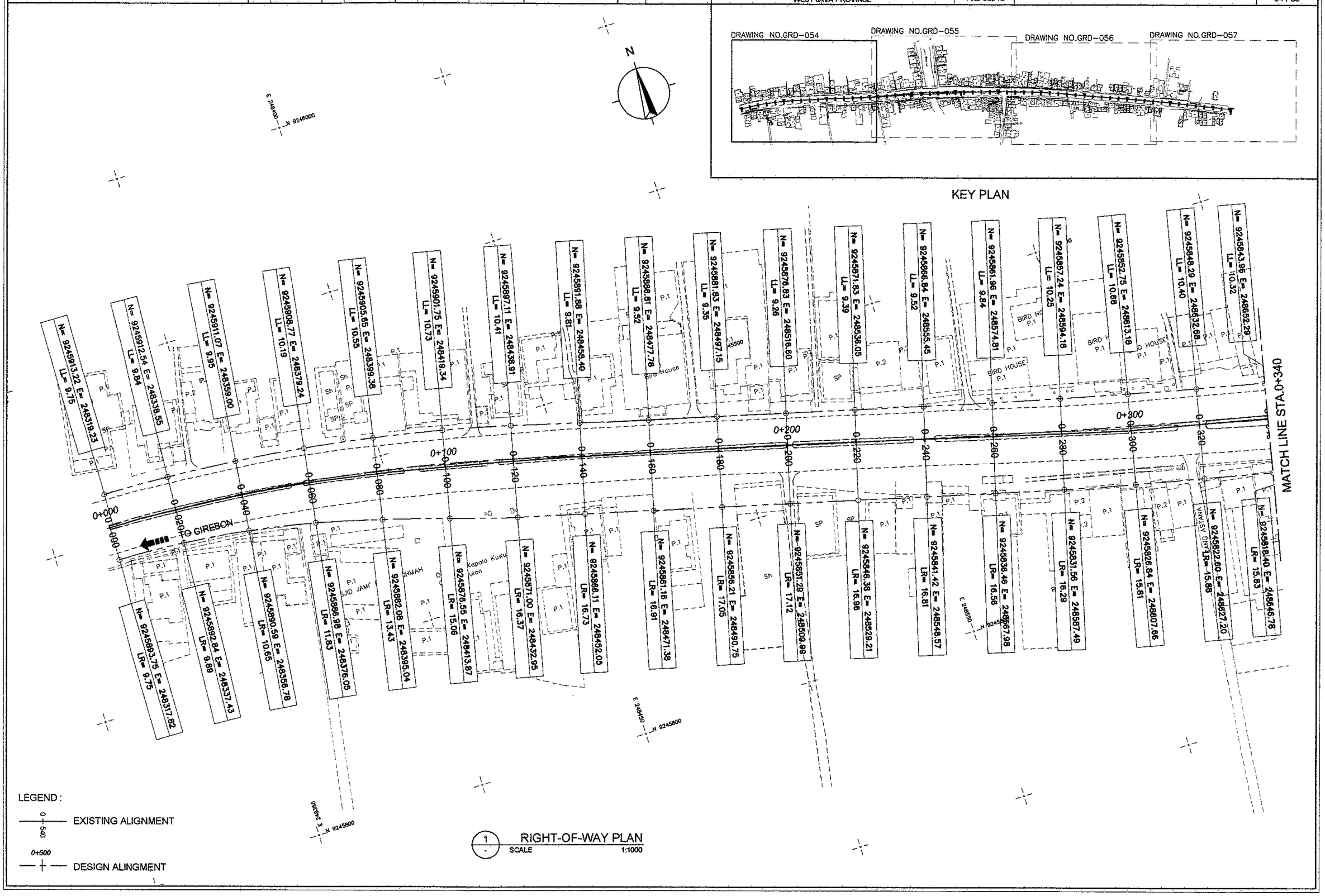

JAPAN INTERNATIONAL COOPERATION AGENCY KATAHIRA & ENGINEERS INTERNATIONAL	DESIGNED BY	CHECKED BY	SUBMITTED BY	REPUBLIC OF INDONESIA MINISTRY OF PUBLIC WORKS DIRECTORATE GENERAL OF HIGHWAYS	PROJECT AND LOCATION :	SCALE :	DRAWING TITLE :	DRAWING NO :
	Name R. UENO	Name T. OKUMURA	Name M. KIUCHI		DETAILED DESIGN STUDY OF NORTH JAVA CORRIDOR FLYOVER PROJECT GEBANG FLYOVER - CONTRACT PACKAGE 2 (NAGREG - GEBANG) WEST JAVA PROVINCE	1 : 1000	RIGHT-OF-WAY PLAN 2 OF 4	GRD-055
	Sign	Sign	Sign	APPROVED BY Ir. HERRY VAZA M,Eng.Sc NIP. : 110038400 Sign		FULL SIZE A3		SHEET NO : 55 / 69
	Date	Date	Date	Date				

KEY PLAN

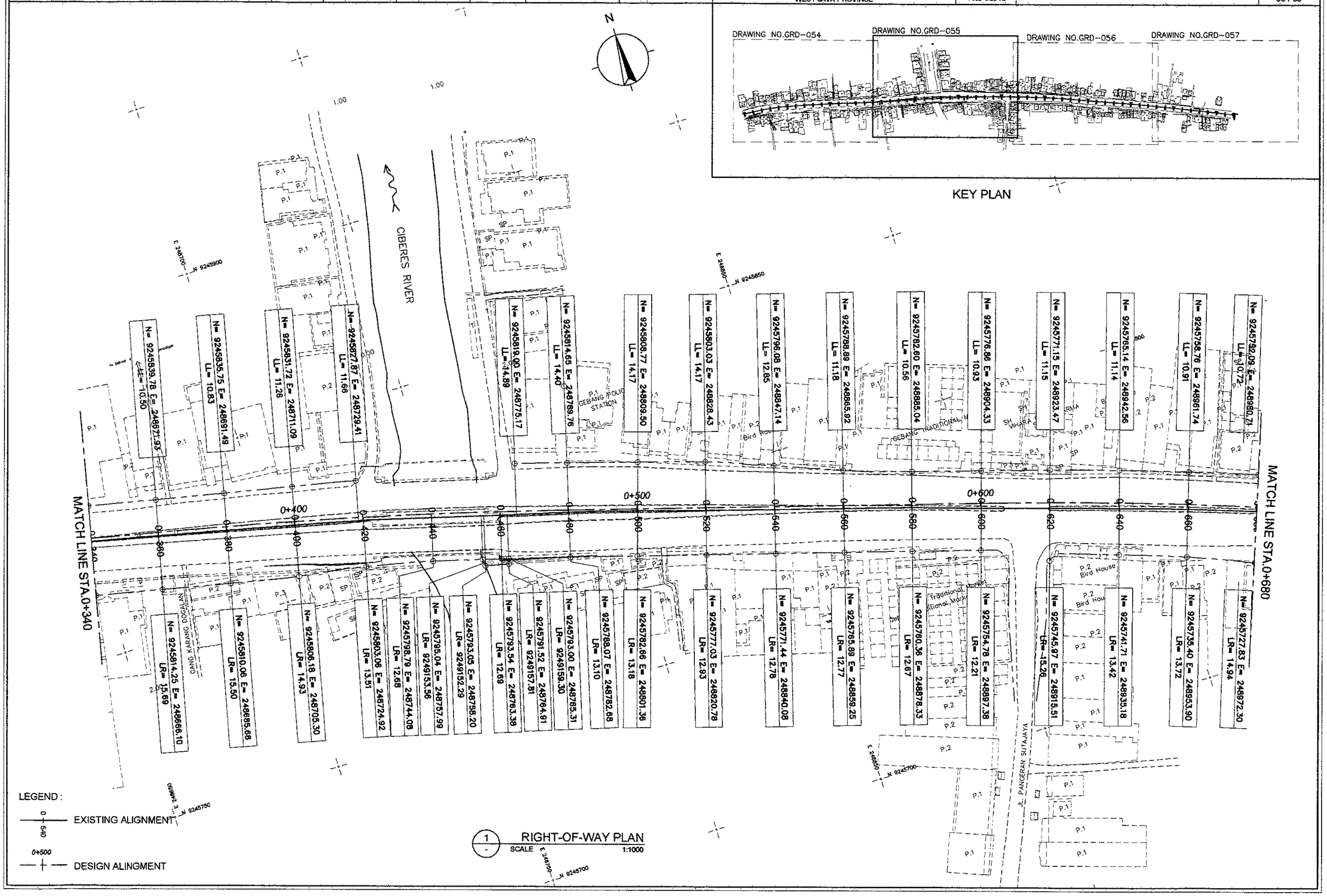

1 RIGHT-OF-WAY PLAN
SCALE 1:1000

JICA JAPAN INTERNATIONAL COOPERATION AGENCY	DESIGNED BY	CHECKED BY	SUBMITTED BY	REPUBLIC OF INDONESIA MINISTRY OF PUBLIC WORKS DIRECTORATE GENERAL OF HIGHWAYS	PROJECT AND LOCATION :	SCALE :	DRAWING TITLE :	DRAWING NO :
KEI KATAHIRA & ENGINEERS INTERNATIONAL	Name: R. UENO	Name: T. OKUMURA	Name: M. KIUCHI		DETAILED DESIGN STUDY OF NORTH JAVA CORRIDOR FLYOVER PROJECT GEBANG FLYOVER - CONTRACT PACKAGE 2 (NAGREG - GEBANG) WEST JAVA PROVINCE	1 : 1000	RIGHT-OF-WAY PLAN 3 OF 4	GRD-056
	Sign	Sign	Sign	APPROVED BY: Ir. HERRY VAZA M,Eng.Sc NIP. : 110038400		FULL SIZE A3		SHEET NO : 56 / 69
	Date	Date	Date	Sign / Date				

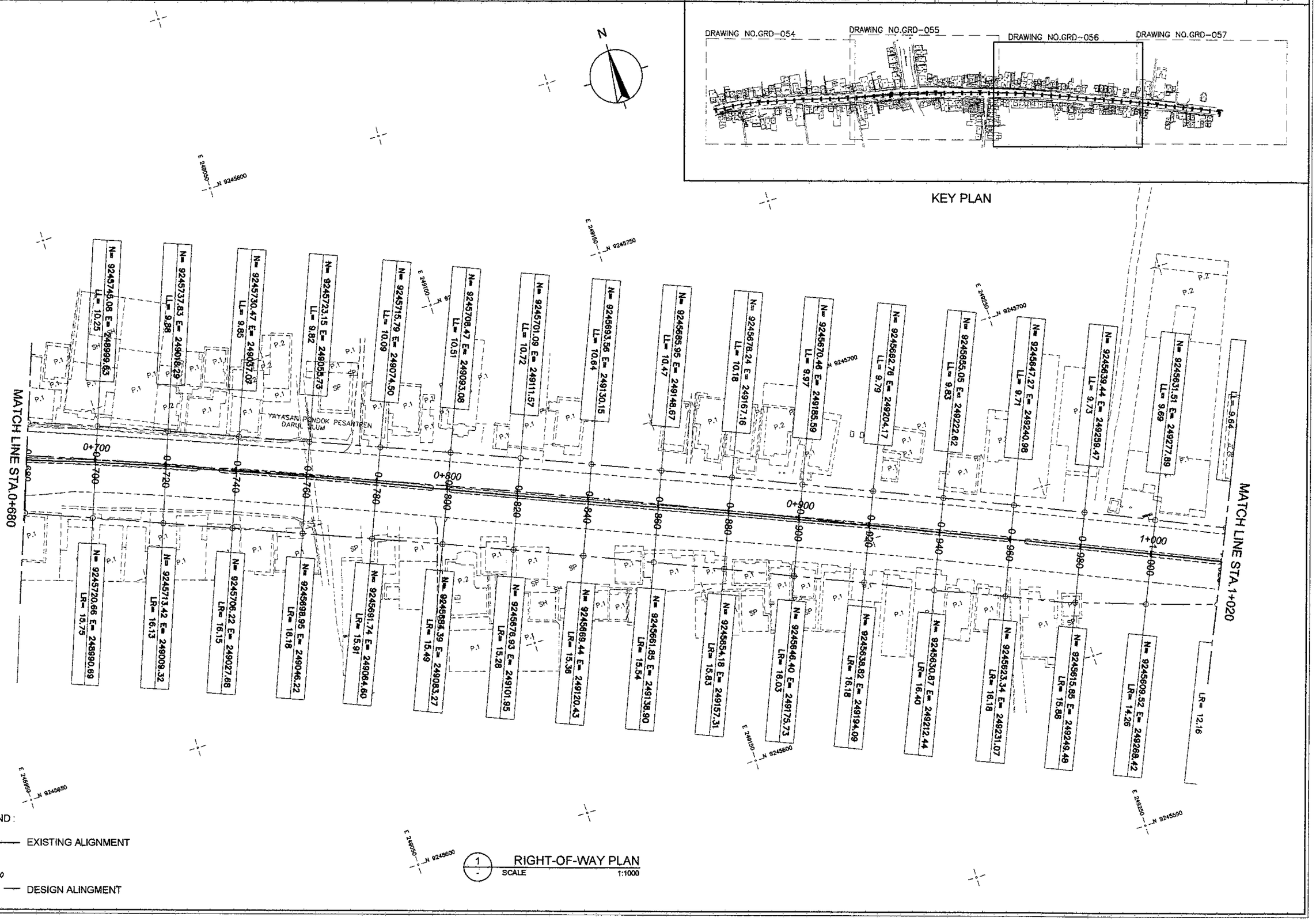

JAPAN INTERNATIONAL COOPERATION AGENCY KATAHIRA & ENGINEERS INTERNATIONAL	DESIGNED BY	CHECKED BY	SUBMITTED BY	REPUBLIC OF INDONESIA MINISTRY OF PUBLIC WORKS DIRECTORATE GENERAL OF HIGHWAYS	PROJECT AND LOCATION :	SCALE :	DRAWING TITLE :	DRAWING NO :
	Name: R. UENO	Name: T. OKUMURA	Name: M. KIUCHI		DETAILED DESIGN STUDY OF NORTH JAVA CORRIDOR FLYOVER PROJECT GEBANG FLYOVER - CONTRACT PACKAGE 2 (NAGREG - GEBANG) WEST JAVA PROVINCE	1 : 1000	RIGHT-OF-WAY PLAN 4 OF 4	GRD-057
	Sign	Sign	Sign	APPROVED BY: Ir. HERRY VAZA M,Eng.Sc NIP. : 110038400				SHEET NO :
	Date	Date	Date	Sign / Date		FULL SIZE A3		57 / 69

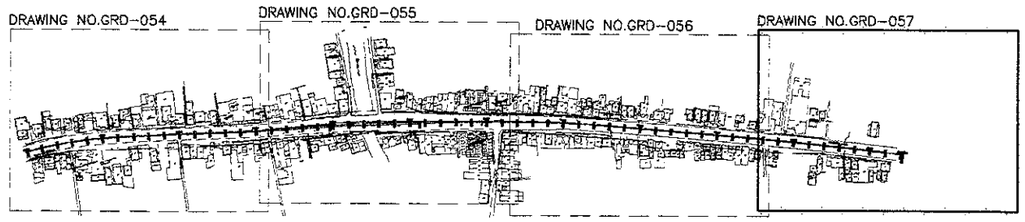

KEY PLAN

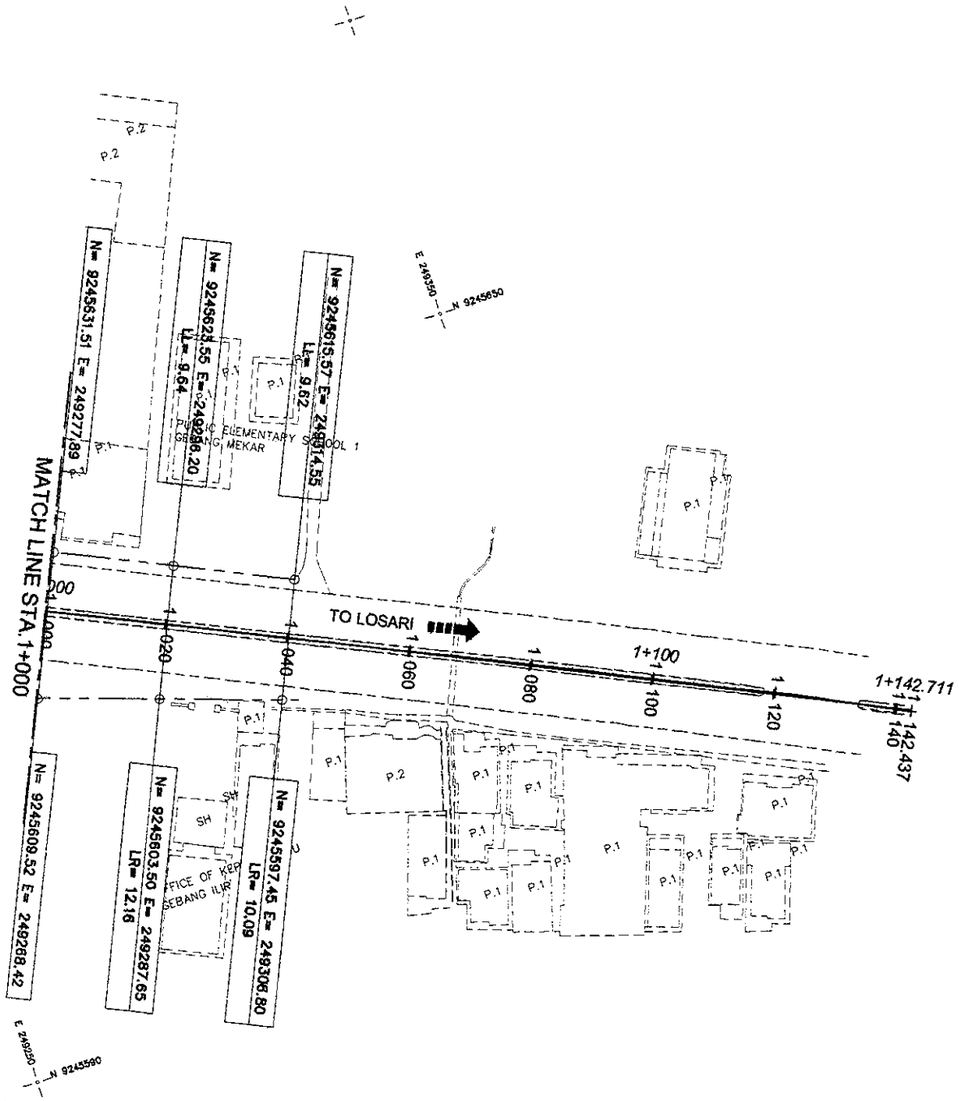

LEGEND :

0+540 — EXISTING ALIGNMENT

0+500 — DESIGN ALINGMENT

1 / - RIGHT-OF-WAY PLAN
SCALE 1:1000

JICA JAPAN INTERNATIONAL COOPERATION AGENCY / KEI KATAHIRA & ENGINEERS INTERNATIONAL	DESIGNED BY	CHECKED BY	SUBMITTED BY	REPUBLIC OF INDONESIA MINISTRY OF PUBLIC WORKS DIRECTORATE GENERAL OF HIGHWAYS	PROJECT AND LOCATION :	SCALE :	DRAWING TITLE :	DRAWING NO :
	Name: R. UENO	Name: T. OKUMURA	Name: M. KIUCHI		DETAILED DESIGN STUDY OF NORTH JAVA CORRIDOR FLYOVER PROJECT GEBANG FLYOVER - CONTRACT PACKAGE 2 (NAGREG - GEBANG) WEST JAVA PROVINCE	NTS	GEOMETRIC DESIGN STANDARD 1 OF 3	GRD-058
	Sign	Sign	Sign	APPROVED BY: Ir. HERRY VAZA M,Eng.Sc NIP. : 110038400 — Sign				SHEET NO :
	Date	Date	Date	Date		FULL SIZE A3		58 / 69

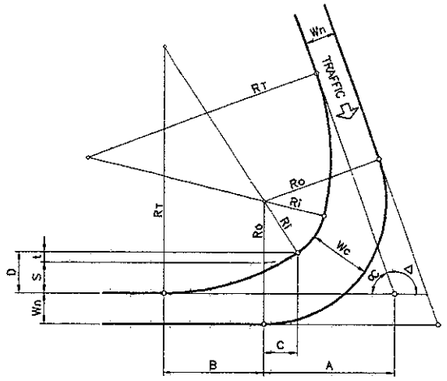

NOTES

- RELATIVE PATHS OF RIGHT TURNING VEHICLES ARE IMAGINARY ONLY; OVERALL, THESE WILL DETERMINE THE CONFIGURATION OF CHANNELI-ZATION ISLANDS IN INTERSECTION DESIGN.
- Ro AS DEFINED BY CONDITION OBTAINING AND Wc IN CONFORMANCE WITH DESIGN VEHICLES AND Ro.

(ADOPTED FROM JAPANESE STANDARDS)

AND/OR "GEOMETRIC JALAN PERKOTAAN" RSNI T-14-2004

WHERE

Wn = LANE WIDTH (NORMAL)
Wc = LANE WIDTH (TURNING)
Δ = INTERSECTION ANGLE
Ro = OUTER RADIUS
Ri = INNER RADIUS
RT = TRANSITION RADIUS
αC = 180° − Δ

FORMULAS

Ri = Ro−Wc
RT = nRi (n=3)
S = Wc−Wn
t = S/(n−1)
A = (Ri+S) COT αC/2
$B = \sqrt{2(R_T - R_i)S - S^2}$
C = B/(n−1)
D = S + t

1 RIGHT TURN LANE/S ELEMENTS THREE CENTERED CURVE-SYMMETRICAL
NOT TO SCALE

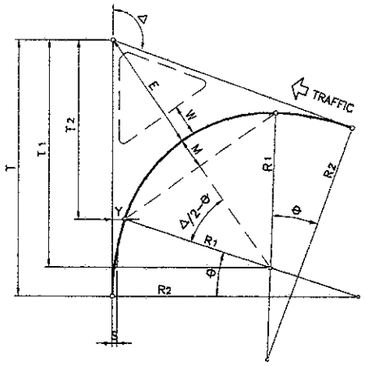

NOTES

- FORMULAS DERIVED BELOW ARE FOR FIELD LAYOUT PURPOSE (DRAWING LAYOUT BY GRAPHICAL SOLUTION ONLY.)
- DESIGN RADII (R1, R2 & R3) AND OFFSET S AS WELL AS LANE WIDTH W (WHERE CORNER ISLANDS ARE REQUIRED UNDER CONDITIONS OBTAINING)

WHERE

Δ = INTERSECTION ANGLE
R1 = INNER RADIUS
R2 = TRANSITION RADIUS
S = OFFSET OF INNER CIRCULAR CURVE FROM TANGENTS

FORMULAS

T1 = (R1+S) TAN Δ/2
T = T1 + (R2−R1) SIN θ
T2 = T1−R1 SIN θ
Y = (R1+S) − R1 COS θ
$E = \frac{R_1+S}{\cos \Delta/2} - R_1$
M = R1−R1 COS (Δ/2−θ)
$\theta = \cos^{-1}\left(\frac{R_2-R_1-S}{R_2-R_1}\right)$

2 LEFT TURN/S ELEMENTS THREE CENTERED CURVE-SYMMETRICAL
NOT TO SCALE

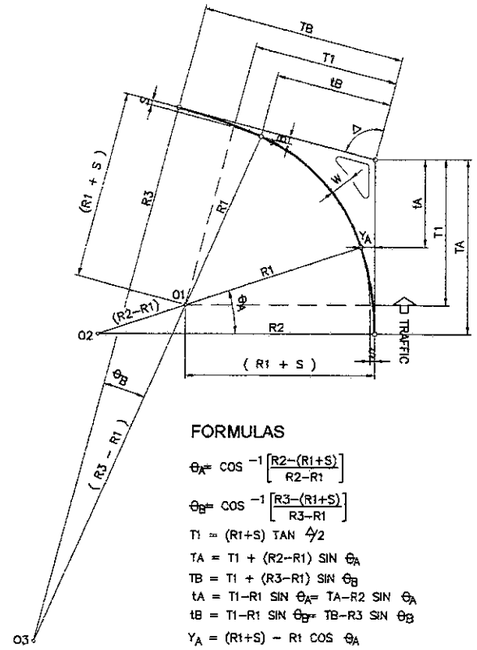

WHERE

R1 = RADIUS OF INTERMEDIATE CIRCULAR ARC
R2 = RADIUS OF CIRCULAR ARC ON APPROACH LEG (1.5 x R1)
R3 = RADIUS OF CIRCULAR ARC ON DEPARTURE LEG (3 x R1)
S = OFFSET OF INNER CIRCULAR CURVE FROM TANGENTS
Δ = INTERSECTION ANGLE

FORMULAS

$\theta_A = \cos^{-1}\left[\frac{R2-(R1+S)}{R2-R1}\right]$
$\theta_B = \cos^{-1}\left[\frac{R3-(R1+S)}{R3-R1}\right]$
T1 = (R1+S) TAN Δ/2
TA = T1 + (R2−R1) SIN θ_A
TB = T1 + (R3−R1) SIN θ_B
tA = T1−R1 SIN θ_A = TA−R2 SIN θ_A
tB = T1−R1 SIN θ_B = TB−R3 SIN θ_B
Y_A = (R1+S) − R1 COS θ_A
Y_B = (R1+S) − R1 COS θ_B

3 LEFT TURN/S ELEMENTS THREE CENTERED CURVE-ASYMMETRICAL
NOT TO SCALE

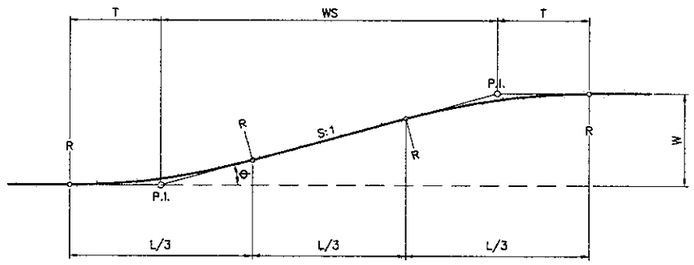

FORMULAS

$\theta = \tan^{-1} 1/S$ (TAPER RATE S:1)
$T = \frac{WS}{3\cos\theta + 1}$
L/3 = T (COS θ+ 1)
$R = \frac{T}{\tan \theta/2}$

APPROX.

T = L/6
$\theta = \tan^{-1} W/4T$

OPERATING SPEED	S VALUE
40 KPH	8
50 KPH	(10)
60 KPH	(12.5)
PARKING TURNOUT (ENTRANCE / EXIT)	2
BUS TURNOUT (DESIRABLE MIN)	4

(S VALUE SHOWN IN PARENTHESIS WERE INTERPOLATED FROM AASHTO)

4 ROADWAY TAPERING - L/3 TAN SECTION (CIRCULAR CURVE ROUNDING)
NOT TO SCALE

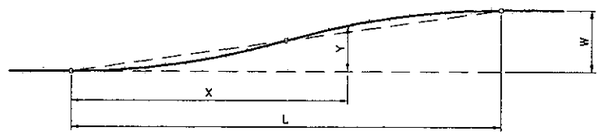

FORMULAS

L = CWS
(C=1 MINIMUM)
(C=2 DESIRABLE)
Y = KW

WHERE

L = LENGTH OF FLARE
W = WIDENING (MAX. OFFSET)
S = TAPER RATE (HOR:VER)
X = DISTANCE ALONG BASELINE
Y = OFFSET FROM BASELINE

LAYOUT BY OFFSET

X/L	0.00	0.05	0.10	0.15	0.20	0.25	0.30	0.35	0.40	0.45	0.50	0.55	0.60	0.65	0.70	0.75	0.80	0.85	0.90	0.95	1.00
K	0.000	0.005	0.020	0.045	0.080	0.125	0.180	0.245	0.320	0.405	0.500	0.595	0.680	0.755	0.820	0.875	0.920	0.955	0.980	0.995	1.000

5 ROADWAY TAPERING - REVERSED PARABOLIC CURVE FLARES - SYMMETRICAL
NOT TO SCALE

JAPAN INTERNATIONAL COOPERATION AGENCY / KATAHIRA & ENGINEERS INTERNATIONAL	DESIGNED BY	CHECKED BY	SUBMITTED BY	REPUBLIC OF INDONESIA MINISTRY OF PUBLIC WORKS DIRECTORATE GENERAL OF HIGHWAYS	PROJECT AND LOCATION :	SCALE :	DRAWING TITLE :	DRAWING NO :
	Name: R. UENO	Name: T. OKUMURA	Name: M. KIUCHI		DETAILED DESIGN STUDY OF NORTH JAVA CORRIDOR FLYOVER PROJECT GEBANG FLYOVER - CONTRACT PACKAGE 2 (NAGREG - GEBANG) WEST JAVA PROVINCE	NTS	GEOMETRIC DESIGN STANDARD 2 OF 3	GRD-059
	Sign	Sign	Sign	APPROVED BY: Ir. HERRY VAZA M,Eng.Sc NIP. : 110038400				SHEET NO :
	Date	Date	Date	Sign / Date		FULL SIZE A3		59 / 69

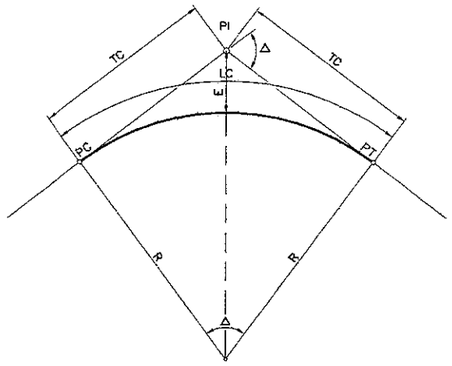

WHERE

PI = POINT OF INTERSECTION
Δ = INTERSECTION ANGLE
R = CURVE RADIUS
T = TANGENT LENGTH
LC = CURVE LENGTH
E = EXTERNAL DISTANCE
PC = BEGINNING OF CIRCULAR CURVE
PT = END OF CIRCULAR CURVE

FORMULAS

$T = R(\tan \Delta/2)$

$LC = \frac{\pi R \Delta}{180}$

$E = T(\tan \Delta/4)$

1 HORIZONTAL CURVE (CIRCULAR)
NOT TO SCALE

NOTE

NO HORIZONTAL CURVE IS REQUIRED WHEN
THE INTERSECTION ANGLE IS LESS THAN ONE DEGREE (1°)

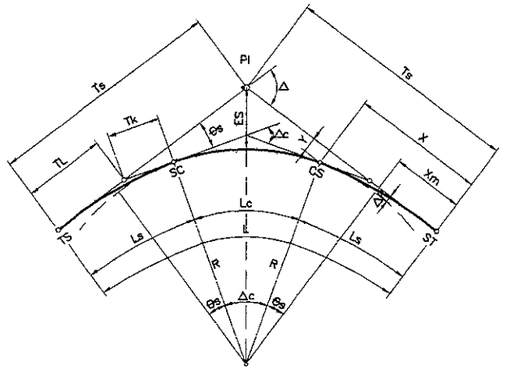

WHERE

PI = POINT OF INTERSECTION
Δ = INTERSECTION ANGLE
R = CURVE RADIUS
Es = EXTERNAL DISTANCE
Ls = LENGTH OF SPIRAL
A = PARAMETER OF CLOTHOID
θs = SPIRAL ANGLE
X,Y = COORDINATES OF POINTS SC AND CS WITH RESPECT TO MAIN TANGENTS
ΔR = OFFSET BETWEEN CIRCULAR CURVE AND MAIN TANGENT ("THROW" OF SPIRAL)
Xm = DISTANCE FROM TS OR ST TO POINT OF "THROW"

Ts = TOTAL TANGENT DISTANCE
TL = LONG TANGENT OF SPIRAL
Tk = SHORT TANGENT OF SPIRAL
L = TOTAL LENGTH OF CURVE
Δc = CENTRAL ANGLE OF CIRCULAR CURVE
Lc = LENGTH OF CIRCULAR CURVE
TS = BEGINNING OF TRANSITION CURVE
SC = BEGINNING OF CIRCULAR CURVE
CS = END OF CIRCULAR CURVE
ST = END OF TRANSITION CURVE

FORMULAS:

$A^2 = R(Ls)$

$\theta s = Ls(D/40)$

$x = Ls\left(1 - \frac{Ls^2}{40R^2}\right)$

$y = \frac{Ls^2}{6R}\left(1 - \frac{Ls^2}{56R^2}\right)$

$\Delta R = y + R\cos\theta s - R$

$Xm = x - R\sin\theta s$

$T = (R+\Delta R)\tan \Delta/2$

$Ts = Xm + T$

$\Delta c = \Delta - 2\theta s$

$Lc = \pi R\, \Delta c/180$

$TL = x - (y/\tan\theta s)$

$Tk = \frac{y}{\sin\theta s}$

$Es = \left[\left(R + \frac{y}{4}\right)\sec\frac{\Delta}{2}\right] - R$

RAILWAY CROSSING

FORMULA

$L1 = 15.0 + 4(N-1)$

WHERE

L1 = MINIMUM LENGTH OF VISIBLE RAILWAY CROSSING
N = NO. OF RAILWAY TRACK

2 HORIZONTAL CURVE WITH TRANSITION (CLOTHOID SPIRAL)
NOT TO SCALE

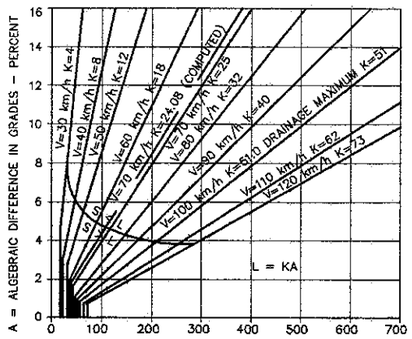

FORMULA

$L = \frac{AS^2}{120 + 3.53}$ $\quad L = 25 - \left(\frac{120 + 3.5S}{A}\right)$

WHEN S < L WHEN S > L

S = STOPPING SIGN DISTANCE (m)
A = ALGEBRAIC DIFFERENCE IN GRADE (%)

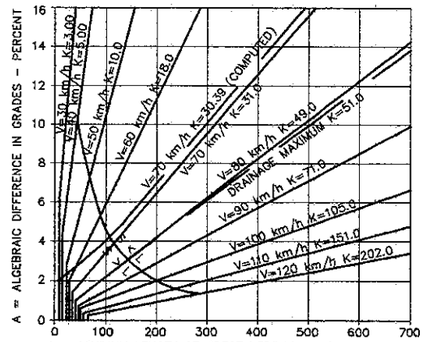

FORMULA

$L = \frac{AS^2}{65S}$ $\quad L = 25 - \frac{65S}{A}$

WHEN

S = S < L : S > L

3 DESIGN CONTROLS FOR VERTICAL CURVES
NOT TO SCALE

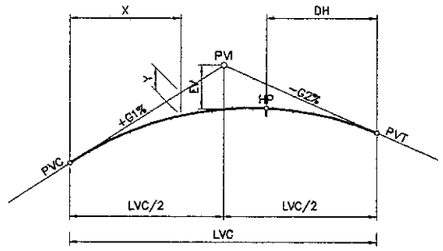

K = LVC / A.D

WHERE

PVI = VERTICAL POINT OF INTERSECTION
AD = ALGEBRAIC DIFFERENCE OF INTERSECTING GRADES
K = RATE OF VERTICAL CURVE
LVC = LENGTH OF VERTICAL CURVE
EV = VERTICAL OFFSET
PVC = VERTICAL POINT OF CURVATURE
PVT = VERTICAL POINT OF TANGENCY
G1, G2 = TANGENT GRADES IN PERCENT
MO = MIDDLE ORDINATE
X = DISTANCE FROM PVC TO PVT TO ANY POINT OF CURVE
Y = VERTICAL OFFSET AT SAID DISTANCE "X"
HP = HIGH POINT OF CURVE
DH = DISTANCE OF "HP" FROM CURVE END RECKONED FROM FLATTER GRADE

FOR SYMMETRICAL VERTICAL PARABOLIC CURVES

$EV = \frac{(G1-G2)}{100} \cdot \frac{L}{8}$

$Yx = \frac{(G1-G2)}{100} \cdot \frac{X^2}{2LVC}$

$DH = \frac{GLVC}{(G1-G2)}$

(WHERE G IS THE LESSER GRADE)

NOTES
1. SIMILARLY APPLIES TO LP (LOW POINT) OF SAG VERTICAL CURVES
2. NO VERTICAL CURVE IS REQUIRED WHERE THE ALGEBRAIC DIFFERENCE IN GRADE IS 0.50% OR LESS

4 VERTICAL PARABOLIC CURVE (SYMMETRICAL)
NOT TO SCALE

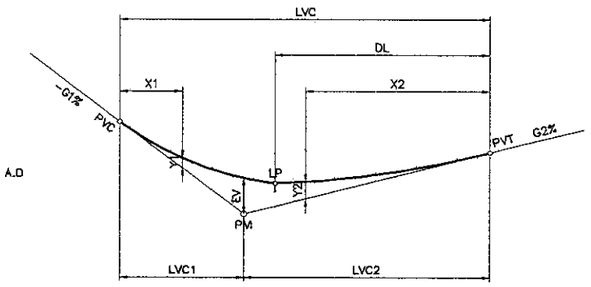

WHERE :

LVC1 = SHORT SIDE OF VERTICAL CURVE LENGTH
LVC2 = LONG SIDE OF VERTICAL CURVE LENGTH
LP = LOW POINT OF CURVE
DL = DISTANCE OF LP FROM CURVE END RECKONED FROM FLATTER GRADE

ALL OTHER NOMENCLATURE SAME AS SYMMETRICAL PARABOLIC CURVE

FOR ASYMMETRICAL VERTICAL PARABOLIC CURVES

$EV = \frac{(G1-G2)}{100} \cdot \frac{L1\ L2}{2L}$ $\quad Y2 = \frac{X2^2}{L2^2} \cdot EV$

$Y1 = \frac{X1^2}{L1^2} \cdot EV$

$DL = \frac{G2\ L2}{L1} \cdot K$

$K = \frac{L}{G1+G2}$

NOTES :
1. SIMILARLY APPLIES TO HP (HIGH POINT) OF CREST VERTICAL CURVES
2. NO VERTICAL CURVE IS REQUIRED WHERE THE ALGEBRAIC DIFFERENCE IN GRADE IS 0.50% OR LESS

5 VERTICAL PARABOLIC CURVE (ASYMMETRICAL)
NOT TO SCALE

JAPAN INTERNATIONAL COOPERATION AGENCY / KATAHIRA & ENGINEERS INTERNATIONAL	DESIGNED BY	CHECKED BY	SUBMITTED BY	REPUBLIC OF INDONESIA MINISTRY OF PUBLIC WORKS DIRECTORATE GENERAL OF HIGHWAYS	PROJECT AND LOCATION :	SCALE :	DRAWING TITLE :	DRAWING NO :
	Name: R. UENO	Name: T. OKUMURA	Name: M. KIUCHI		DETAILED DESIGN STUDY OF NORTH JAVA CORRIDOR FLYOVER PROJECT GEBANG FLYOVER - CONTRACT PACKAGE 2 (NAGREG - GEBANG) WEST JAVA PROVINCE	NTS	GEOMETRIC DESIGN STANDARD 3 OF 3	GRD-060
	Sign	Sign	Sign	APPROVED BY: Ir. HERRY VAZA M,Eng.Sc NIP. : 110038400				SHEET NO :
	Date	Date	Date	Sign / Date		FULL SIZE A3		60 / 69

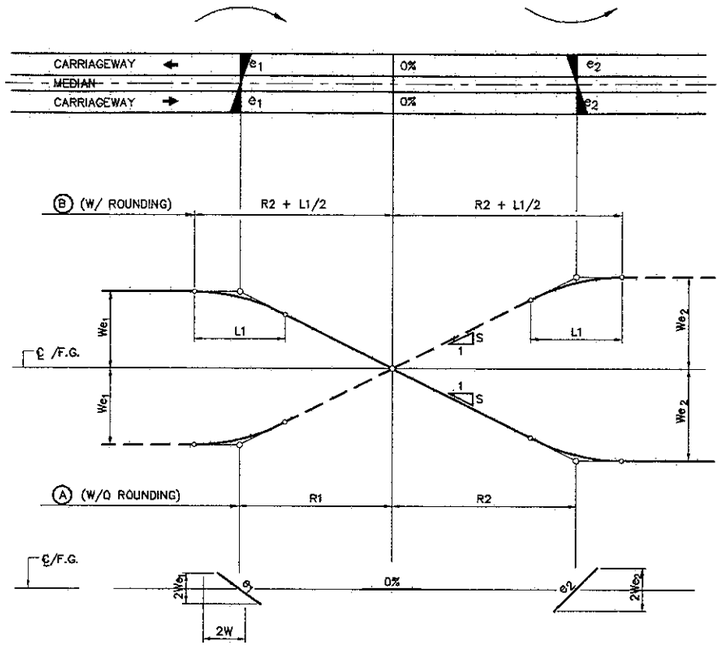

$R1 = \frac{We_1}{S}$

$R2 = \frac{We_2}{S}$

$L1 = \frac{Wnc}{S}$

WHERE

R1 = LENGTH OF SUPERELEV. RUNOFF (1st CURVE)
R2 = LENGTH OF SUPERELEV. RUNOFF (2nd CURVE)
L1 = LENGTH OF ROUNDING
ALL OTHER NOMENCLATURE THE SAME

GEBANG FLYOVER PIER

STATION		SUPERELEVATION LEFT	SUPERELEVATION RIGHT
A1	0+316.00	-2.000	-2.000
P1	0+336.00	-2.000	-2.000
P2	0+356.00	-2.000	-2.000
P3	0+376.00	-2.000	-2.000
P4	0+396.00	-2.000	-2.000
P5	0+423.00	-2.000	-2.000
P6	0+459.00	-2.000	-2.000
P7	0+486.00	-2.000	-2.000
P8	0+513.00	-2.000	-2.000
P9	0+540.00	-2.000	-2.000
P10	0+567.00	-2.000	-2.000
P11	0+594.00	-2.000	-2.000
P12	0+621.00	-2.000	-2.000
P13	0+641.00	-2.000	-2.000
P14	0+661.00	-2.000	-2.000
P15	0+681.00	-2.000	-2.000
A2	0+701.00	-2.000	-2.000

S VALUE (INTERPOLATED FROM AASHTO)

DESIGN SPEED Km/h	40	50	60	70	80	90	100	110	120
100 S	0.70	0.65	0.60	0.55	0.50	0.48	0.45	0.42	0.40

NOTES

1. RATE OF SUPERELEVATION "e" IS AS SHOWN IN TABLE.
2. ROUNDING "L1" IS OPTIONAL AND NECESSARY ONLY IF "S" IS GREATER THAN THAT SHOWN IN TABLE FOR "S" VALUE.
3. SIDEWALKS SHALL ALWAYS SLOPE TOWARDS THE TRAVELWAY.
4. SHOULDERS OF THE MAIN ROADS ALWAYS SLOPE AWAY FROM THE TRAVELWAY IRRESPECTIVE OF THE RATE OF SUPERELEVATION, "e".

WHERE

LK1 = MIN. LENGTH OF EASEMENT/CLOTHOID (W/O ROUNDING)
LK2 = MIN. LENGTH OF EASEMENT/CLOTHOID (W/ ROUNDING, L1)
R1 = SUPERELEVATION RUNOUT LENGTH (WITHIN CLOTHOID) *
R2 = SUPERELEVATION RUNOFF LENGTH
L1 = LENGTH OF ROUNDING
W = CARRIAGEWAY WIDTH = 7.00m (2 LANES EACH DIRECTION)
e = SUPERELEVATION
Nc = NORMAL CROWN SLOPE
S = RELATIVE SLOPE OF EDGES TO CENTERLINE

* OTHER AUTHORITIES PLACE R1 WITHIN THE TANGENT

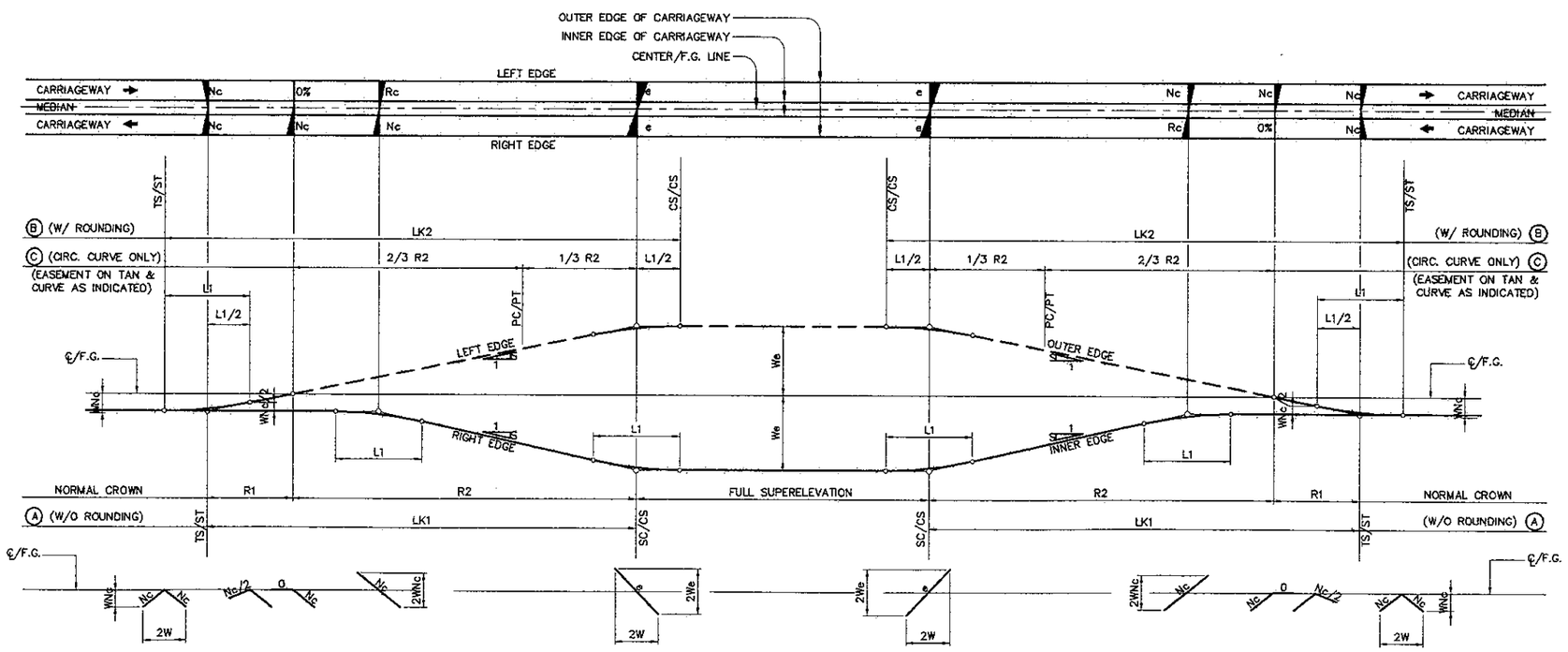

$A^2 = R \times LK$

A = CLOTHOID PARAMETER

$R1 = \frac{WNc}{S}$

$R2 = \frac{We}{S}$

$L1 = \frac{Wnc}{S}$

$LK1 = R1+R2 = \frac{W}{S}(Nc+e)$ (A)

$LK2 = L1+LK1 = \frac{W}{S}(2Nc+e)$ (B)

1 SUPERELEVATION TRANSITION FLYOVER

NOT TO SCALE

JAPAN INTERNATIONAL COOPERATION AGENCY / KATAHIRA & ENGINEERS INTERNATIONAL	DESIGNED BY	CHECKED BY	SUBMITTED BY	REPUBLIC OF INDONESIA MINISTRY OF PUBLIC WORKS DIRECTORATE GENERAL OF HIGHWAYS	PROJECT AND LOCATION :	SCALE :	DRAWING TITLE :	DRAWING NO :
	Name: R. UENO	Name: T. OKUMURA	Name: M. KIUCHI		DETAILED DESIGN STUDY OF NORTH JAVA CORRIDOR FLYOVER PROJECT GEBANG FLYOVER - CONTRACT PACKAGE 2 (NAGREG - GEBANG) WEST JAVA PROVINCE	NTS	STANDARD ROADWAY SUPERELEVATION	GRD-061
	Sign	Sign	Sign	APPROVED BY: Ir. HERRY VAZA M,Eng.Sc NIP. : 110038400				SHEET NO :
	Date	Date	Date	Sign / Date		FULL SIZE A3		61 / 69

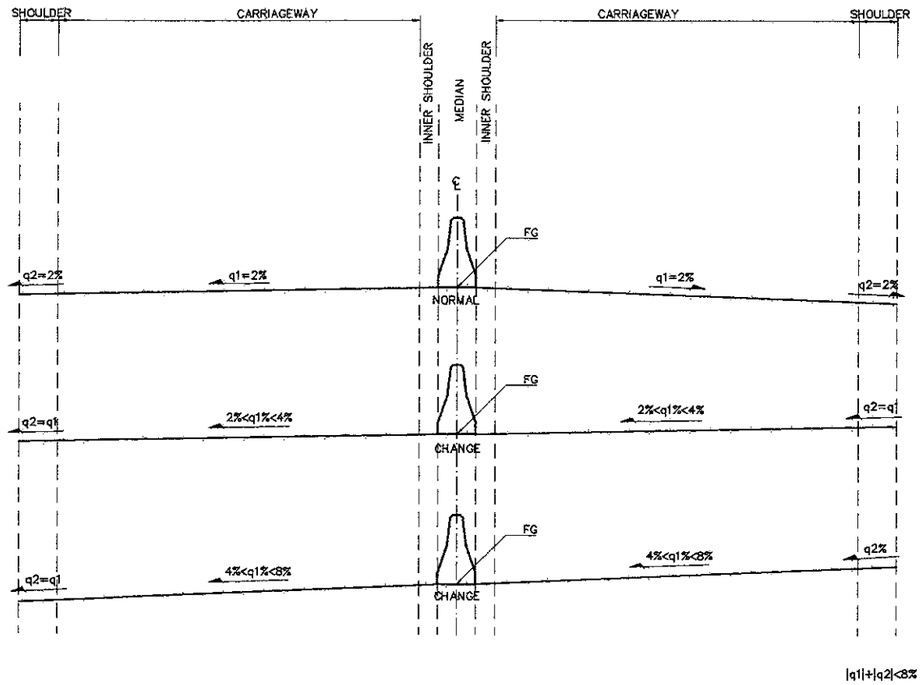

1 - MAIN ROAD / FLYOVER
NOT TO SCALE

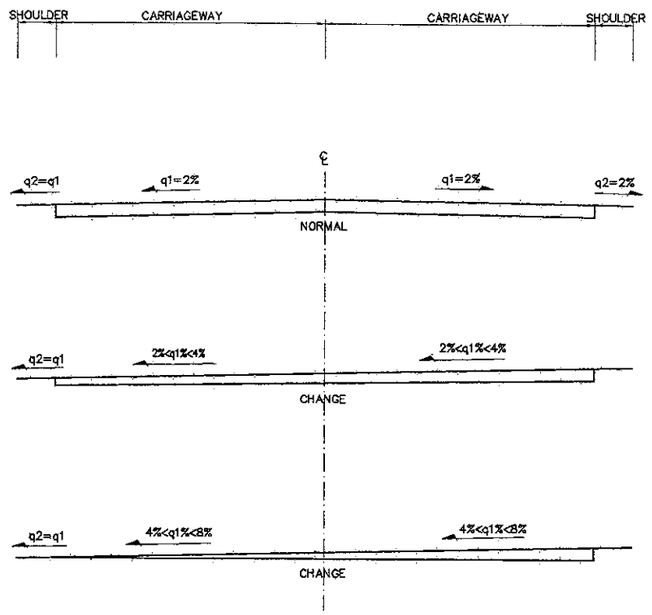

2 - SUPERELEVATED (EXISTING 2-LANE, 2-WAY)
NOT TO SCALE

GEBANG FLYOVER			
STATION	SUPER ELEVATION		
	FG	LEFT	RIGHT
0+160.00	2,799	-2.000	-2.000
0+200.00	3,588	-2.000	-2.000
0+240.00	5,245	-2.000	-2.000
0+260.00	6.185	-2.000	-2.000
0+300.00	8.065	-2.000	-2.000
0+360.00	10.885	-2.000	-2.000
0+400.00	12.421	-2.000	-2.000
0+420.00	12.857	-0.300	-2.000
0+500.00	12.697	1.700	-2.000
0+600.00	11.787	2.500	-2.500
0+640.00	11.358	2.500	-2.500
0+700.00	9.831	2.463	-2.000
0+760.00	7.388	2.000	-2.000
0+800.00	5.716	2.067	-2.067
0+860.00	3.433	2.100	-2.100
0+900.00	2,673	-2.000	-2.000

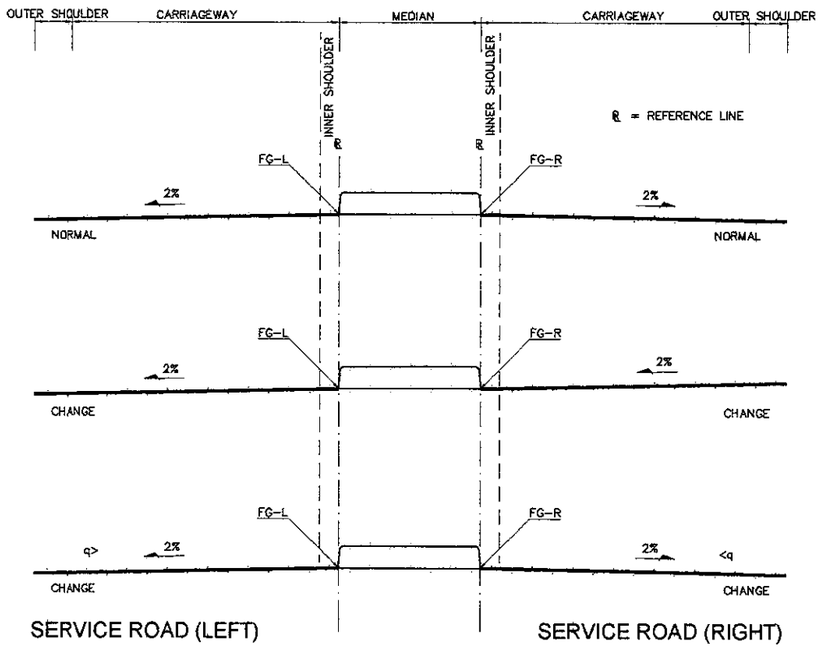

R (m)	Vd = 40 km/hr e %	L (m) 2 Lns	L (m) 4 Lns	Vd = 50 km/hr e %	L (m) 2 Lns	L (m) 4 Lns	Vd = 60 km/hr e %	L (m) 2 Lns	L (m) 4 Lns
1000	NC	0	0	RC	11	17	2,1	13	19
900	NC	0	0	RC	11	17	2,3	14	21
800	NC	0	0	RC	11	17	2,5	15	23
700	RC	10	15	2,1	12	17	2,8	17	25
600	RC	10	15	2,4	13	22	3,1	19	28
500	2,1	11	16	2,8	15	20	3,5	21	32
400	2,5	13	19	3,3	18	23	4,0	24	36
300	3,1	16	24	3,9	22	27	4,6	28	41
250	3,5	18	27	4,2	23	32	5	30	45
200	3,9	20	30	4,7	26	39	5,5	33	50
175	4,1	21	32	5,0	28	42	5,8	35	52
150	4,4	23	34	5,3	29	44	6,0	36	54
140	4,5	23	35	5,4	30	45	6,0	36	54
130	4,6	24	35	5,6	31	47	Rmin =		135
120	4,8	25	37	5,7	32	47			
110	5,0	26	39	5,8	32	48			
100	5,2	27	40	6,0	33	50			
90	5,4	28	42	6,0	33	50			
80	5,6	29	43	Rmin =		90			
70	5,8	30	45						
60	6,0	31	46						
	Rmin =		55						

WHERE :

e_{max} = 6%
R = RADIUS OF CURVE
Vd = DESIGN SPEED
e = RATE OF SUPERELEVATION
L = MINIMUM LENGHT OF RUNOFF (DOES NOT INCLUDE TANGET RUNOUT) AS DISCUSSED IN TANGENT TO CURVE TRANSITION SECTION
NC = NORMAL CROWN SECTION
RC = REMOVE CROWN SECTION, SUPERELEVATED AT NORMAL CROWN SLOPE

JAPAN INTERNATIONAL COOPERATION AGENCY / KATAHIRA & ENGINEERS INTERNATIONAL	DESIGNED BY	CHECKED BY	SUBMITTED BY	REPUBLIC OF INDONESIA MINISTRY OF PUBLIC WORKS DIRECTORATE GENERAL OF HIGHWAYS	PROJECT AND LOCATION :	SCALE :	DRAWING TITLE :	DRAWING NO :
	Name: R. UENO	Name: T. OKUMURA	Name: M. KIUCHI		DETAILED DESIGN STUDY OF NORTH JAVA CORRIDOR FLYOVER PROJECT GEBANG FLYOVER - CONTRACT PACKAGE 2 (NAGREG - GEBANG) WEST JAVA PROVINCE	NTS	STANDARD THREE LEG & FOUR LEG OF INTERSECTION	GRD-062
	Sign	Sign	Sign	APPROVED BY: Ir. HERRY VAZA M,Eng.Sc NIP. : 110038400				SHEET NO :
	Date	Date	Date	Sign / Date		FULL SIZE A3		62 / 69

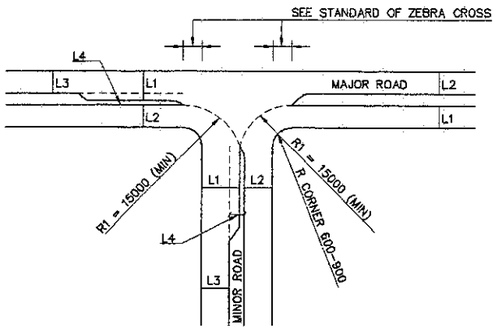

NOTES : – L1 (WITHOUT TRAFFIC LIGHT) BASED FROM CAPACITY OF INTERSECTION)
L1 (WITH TRAFFIC LIGHT) BASED FROM CAPACITY OF TRAFFIC LIGHT ANALYSIS
– MINIMUM ABSOLUTE WIDTH L4 = 2.75 M
OR : L4 = L1 – L3 > = 2.75 M

A. TYPICAL OF THREE LEGS INTERSECTION

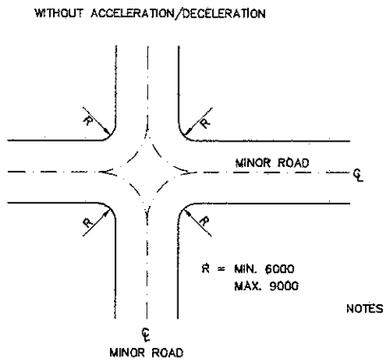

NOTES : – SEE STANDARD ROAD MARKING
– TAPER AND STORAGE NEEDED BASED ON TRAFFIC ANALYSIS

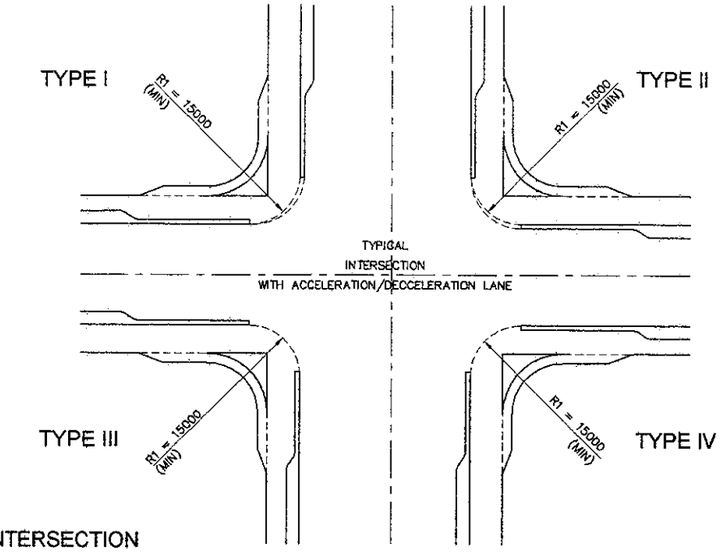

B. TYPICAL OF FOUR LEGS INTERSECTION

1. DECELERATION WITHOUT STORAGE

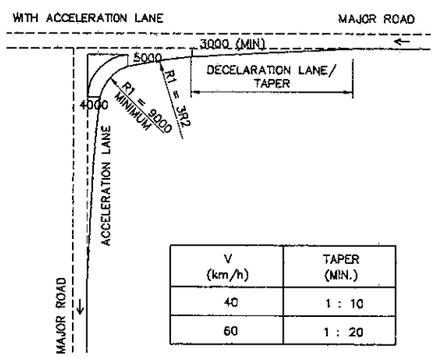

V (km/h)	TAPER (MIN.)
40	1 : 10
60	1 : 20

2. DECELERATION WITH STORAGE

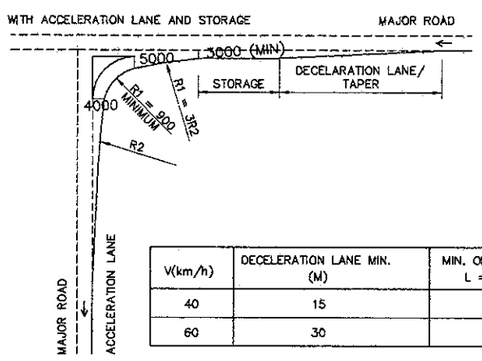

V(km/h)	DECELERATION LANE MIN. (M)	MIN. OF TAPER LENGTH L = V x dw/6m
40	15	20
60	30	30

* IF LENGTH OF TAPER > DECELERATION LANE
TAPER ASSUMED AS DECELERATION LANE

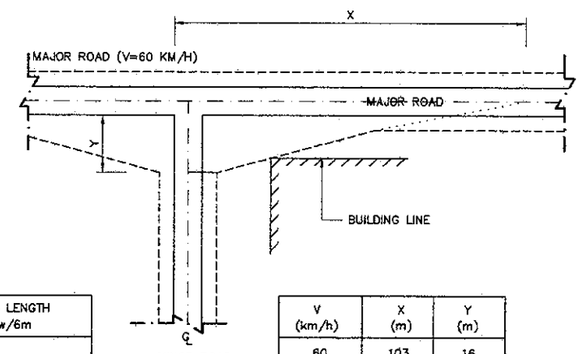

V (km/h)	X (m)	Y (m)
60	103	16
40	70	16

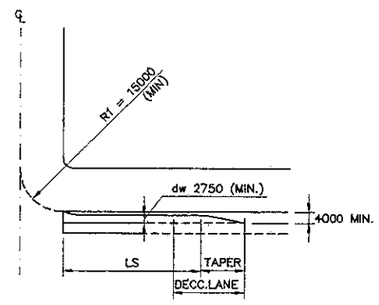

D. TYPICAL RIGHT TURN FROM MAJOR ROAD TO MINOR / MAJOR ROAD

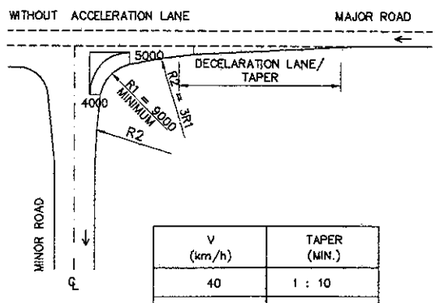

V (km/h)	TAPER (MIN.)
40	1 : 10
60	1 : 20

– R MIN. CALCULATED BASED ON SINGLE UNIT TRUCK
– FOR SPECIAL DESIGN, SEE STANDARD OF GEOMETRIC DESIGN

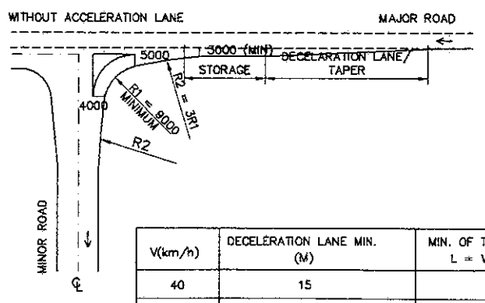

V(km/h)	DECELERATION LANE MIN. (M)	MIN. OF TAPER LENGTH L = V x dw/6m
40	15	20
60	30	30

* IF LENGTH OF TAPER > DECELERATION LANE
TAPER BE ASSUMED AS DECELERATION LANE

E. LEFT TURN LINE

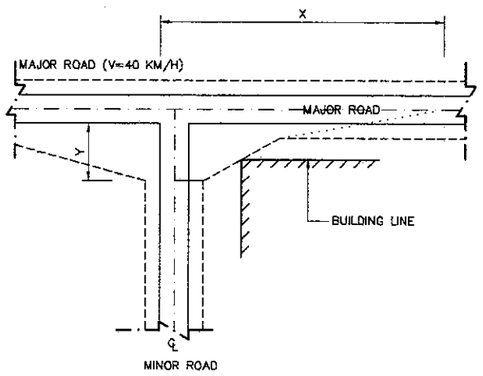

F. CLEARANCE SIGHT DISTANCE

V(km/h)	DECELERATION LANE MIN. (M)	MIN. OF TAPER LENGTH L = V x dw/6m
40	15	20
60	30	30

LENGTH OF STORAGE : LS = 2 x M x S WITHOUT TRAFFIC LIGHT
LS = 15 x N x S WITH TRAFFIC LIGHT

M – NUMBER OF MEANS OF RIGHT TURN VEHICLE/MINUTES
N – NUMBER OF MEANS OF LEFT TURN VEHICLE/CIRCLE
S – DISTANCE TWO VEHICLES (M)

1 / - STANDARD THREE LEG & FOUR LEG INTERSECTION
NOT TO SCALE

JICA JAPAN INTERNATIONAL COOPERATION AGENCY / KEI KATAHIRA & ENGINEERS INTERNATIONAL	DESIGNED BY: Name R. UENO, Sign, Date	CHECKED BY: Name T. OKUMURA, Sign, Date	SUBMITTED BY: Name M. KIUCHI, Sign, Date	REPUBLIC OF INDONESIA MINISTRY OF PUBLIC WORKS DIRECTORATE GENERAL OF HIGHWAYS	APPROVED BY: Ir. HERRY VAZA M,Eng.Sc, NIP. : 110038400, Sign, Date	PROJECT AND LOCATION : DETAILED DESIGN STUDY OF NORTH JAVA CORRIDOR FLYOVER PROJECT GEBANG FLYOVER - CONTRACT PACKAGE 2 (NAGREG - GEBANG) WEST JAVA PROVINCE	SCALE : 1 : 150, FULL SIZE A3	DRAWING TITLE : STANDARD ASPHALT PAVEMENT	DRAWING NO : GRD-063	SHEET NO : 63 / 69

FLEXIBLE PAVEMENT

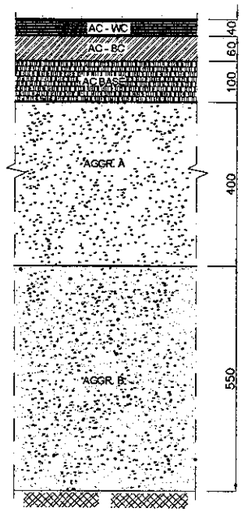

1 SERVICE ROAD
SCALE 1:150

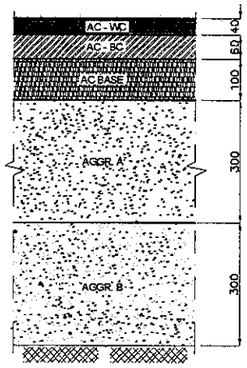

2 ABUTMENT (APPROACH ROAD)
SCALE 1:150

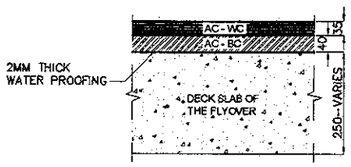

3 VIADUCT
SCALE 1:150

EXISTING & NEW PAVEMENT CONNECTION

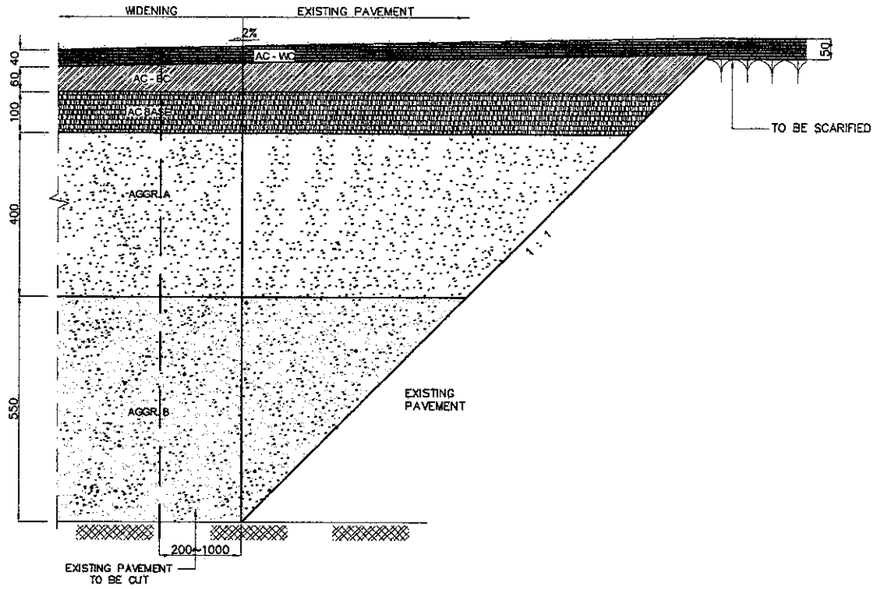

4 WIDENING ≤ 2000mm
SCALE 1:150

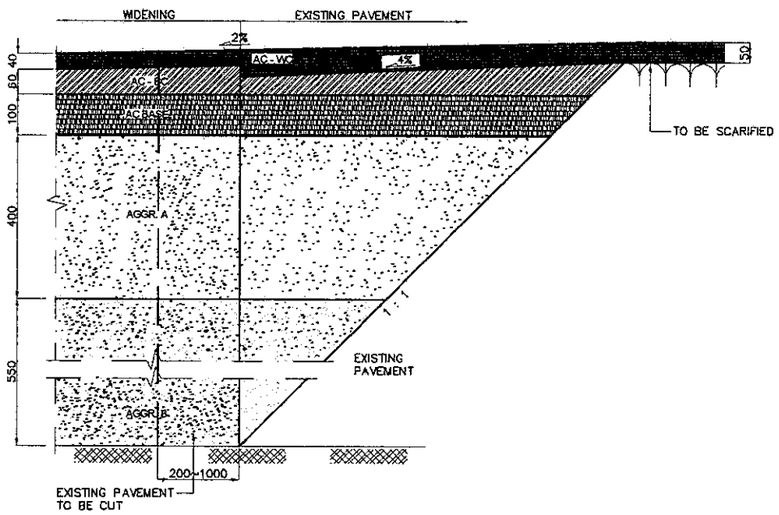

5 WIDENING > 2000mm
SCALE 1:150

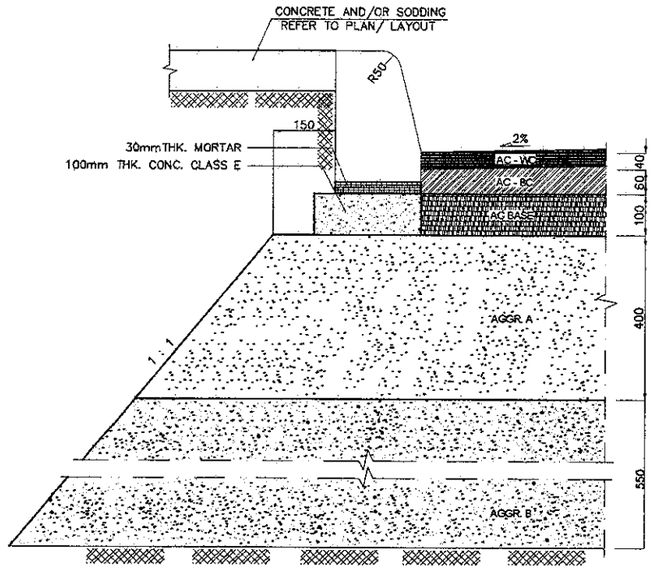

6 MEDIAN CURB CONNECTION
SCALE 1:150

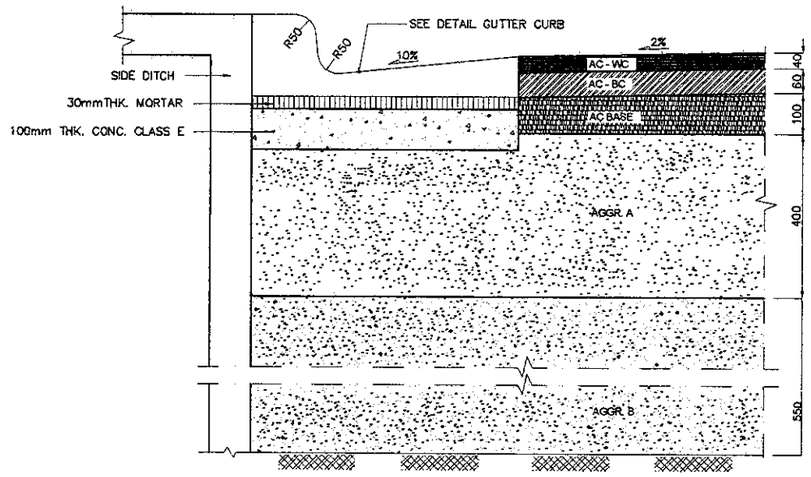

7 CURB AND GUTTER CONNECTION
SCALE 1:150

OVERLAY THICKNESS

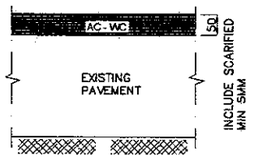

8 NORMAL OVERLAY
SCALE 1:150

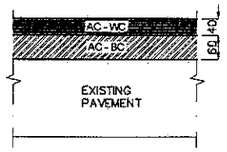

9 OVERLAY THICKNESS < 50 > 100mm
SCALE 1:150

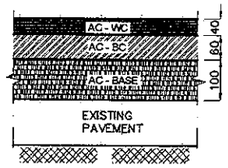

10 OVERLAY THICKNESS > 100mm
SCALE 1:150

JICA JAPAN INTERNATIONAL COOPERATION AGENCY / KEI KATAHIRA & ENGINEERS INTERNATIONAL	DESIGNED BY	CHECKED BY	SUBMITTED BY	REPUBLIC OF INDONESIA MINISTRY OF PUBLIC WORKS DIRECTORATE GENERAL OF HIGHWAYS	PROJECT AND LOCATION :	SCALE :	DRAWING TITLE :	DRAWING NO :
	Name: R. UENO	Name: T. OKUMURA	Name: M. KIUCHI		DETAILED DESIGN STUDY OF NORTH JAVA CORRIDOR FLYOVER PROJECT GEBANG FLYOVER - CONTRACT PACKAGE 2 (NAGREG - GEBANG) WEST JAVA PROVINCE	NTS	STANDARD COMBINATION CONCRETE CURB AND GUTTER	GRD-064
	Sign	Sign	Sign	APPROVED BY: Ir. HERRY VAZA M,Eng.Sc NIP. : 110038400				SHEET NO : 64 / 69
	Date	Date	Date	Sign / Date		FULL SIZE A3		

CONCRETE BLOCK

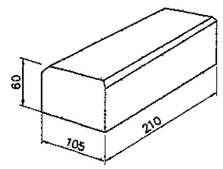

TYPE A

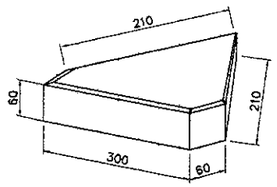

TYPE B

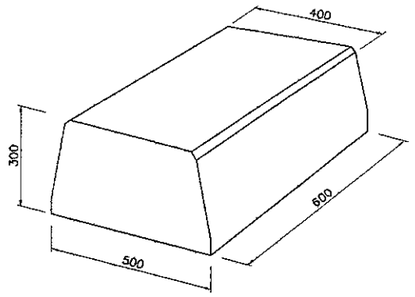

TYPE C

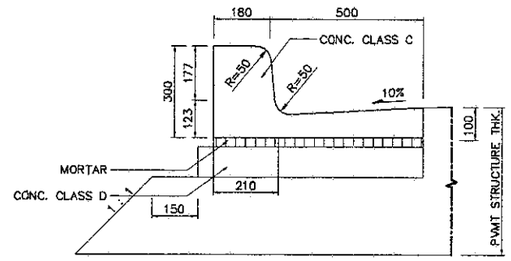

6 - COMBINATION CONCRETE CURB AND GUTTER
NOT TO SCALE

CONCRETE CURB

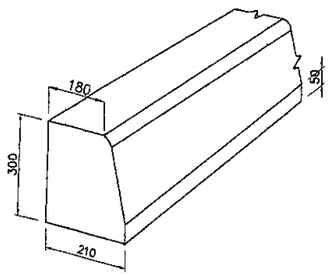

TYPE A

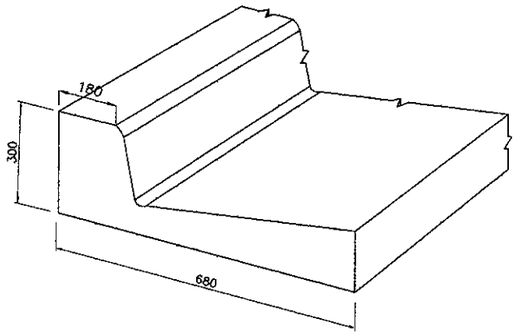

TYPE B

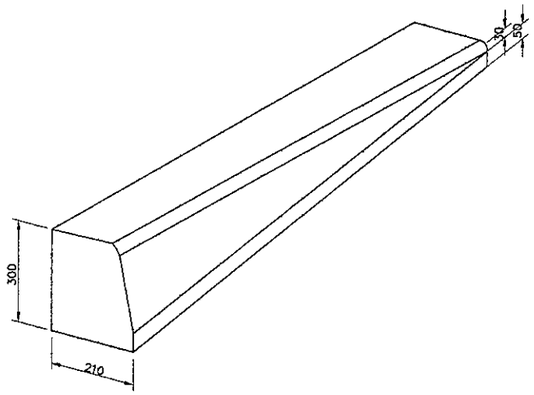

TYPE C

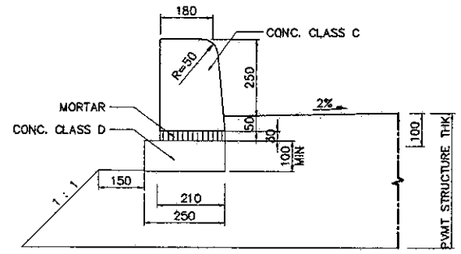

5 - CONCRETE CURB
NOT TO SCALE

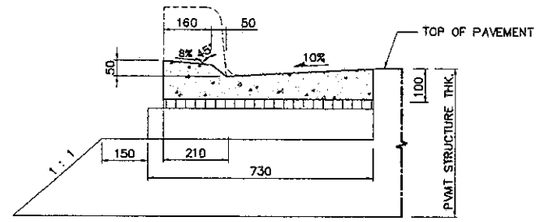

4 - CONCRETE DROP CURB AND GUTTER (MODIFIED)
NOT TO SCALE

TYPE	DIMENSION (MM)								REMARK
	a	a1	b	b1	h1	h2	h3	h	
A	180	–	210	–	50	–	–	300	CURB
B	180	500	210	–	75	225	100	300	GUTTER CURB

SPECIFICATION :

CONCRETE QUALITY K.300
- SHALL NOT BE PATCHED
- PERFORMED DAMAGED < 5%
- MINIMUM REINFORCED ϕ 6MM

CONCRETE QUALITY K.150
- COST IN SITE
- NO REINFORCEMENT

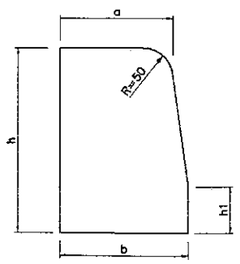

1 - CONCRETE CURB
NOT TO SCALE

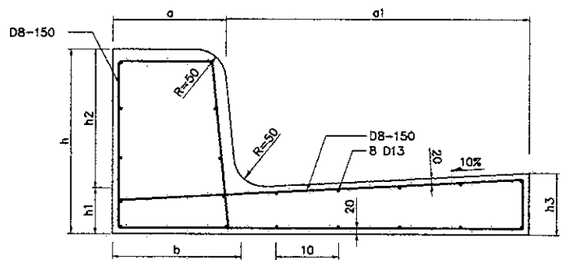

2 - REINFORCEMENT OF COMBINATION CONCRETE CURB AND GUTTER
NOT TO SCALE

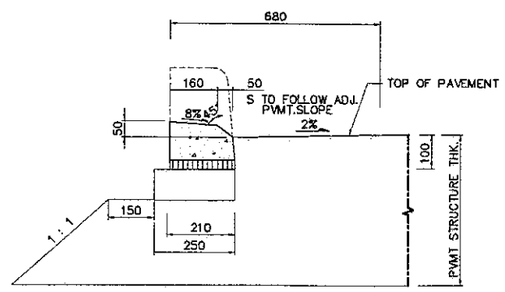

3 - CONCRETE DROP CURB (MEDIAN)
NOT TO SCALE

JICA JAPAN INTERNATIONAL COOPERATION AGENCY / KEI KATAHIRA & ENGINEERS INTERNATIONAL	DESIGNED BY: Name R. UENO, Sign, Date	CHECKED BY: Name T. OKUMURA, Sign, Date	SUBMITTED BY: Name M. KIUCHI, Sign, Date	REPUBLIC OF INDONESIA MINISTRY OF PUBLIC WORKS DIRECTORATE GENERAL OF HIGHWAYS	APPROVED BY: Ir. HERRY VAZA M,Eng.Sc, NIP. : 110038400, Sign, Date	PROJECT AND LOCATION : DETAILED DESIGN STUDY OF NORTH JAVA CORRIDOR FLYOVER PROJECT GEBANG FLYOVER - CONTRACT PACKAGE 2 (NAGREG - GEBANG) WEST JAVA PROVINCE	SCALE : AS SHOWN, FULL SIZE A3	DRAWING TITLE : STANDARD PUBLIC AND PRIVATE ENTRANCE	DRAWING NO : GRD-065	SHEET NO : 65 / 69

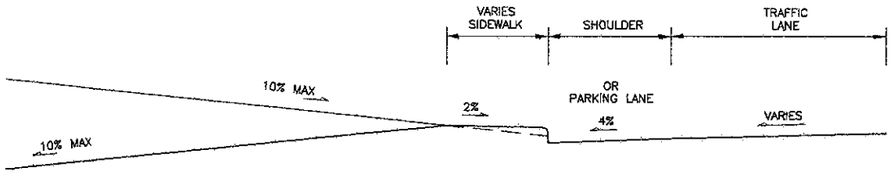

C - PRIVATE ENTRANCE PROFILE
NOT TO SCALE

F - PUBLIC ENTRANCE PROFILE
NOT TO SCALE

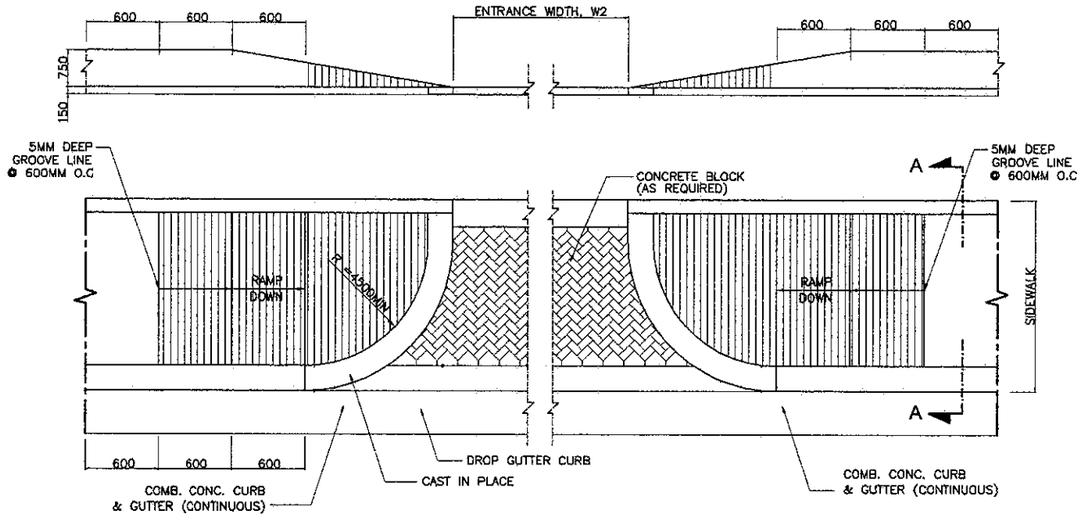

B - PRIVATE DRIVEWAY ENTRANCE - URBAN
SCALE 1 : 50

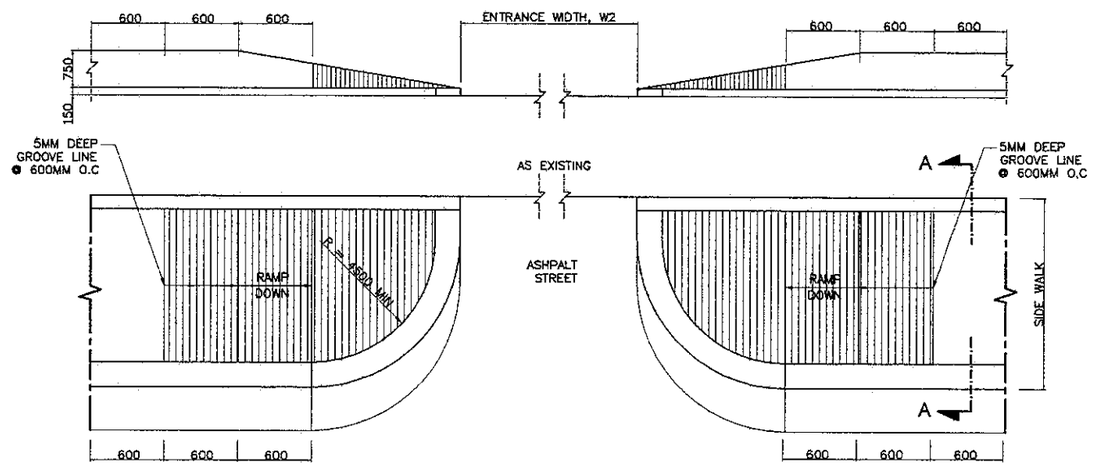

E - PUBLIC STREET / ALLEY ENTRANCE
SCALE 1 : 50

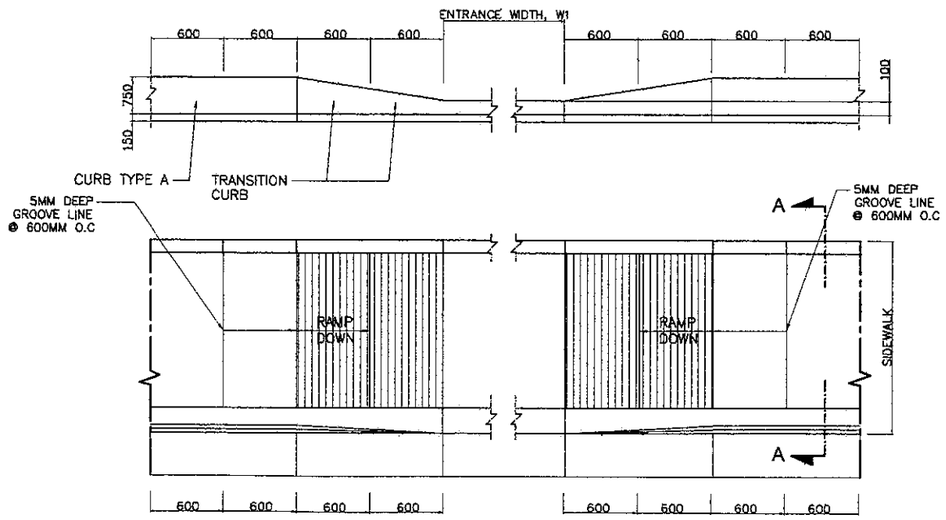

A - PRIVATE ENTRANCE - URBAN
SCALE 1 : 50

	SINGLE	DOUBLE
W_1	≤ 1600	≤ 3000
W_2	≤ 3000	≤ 9000

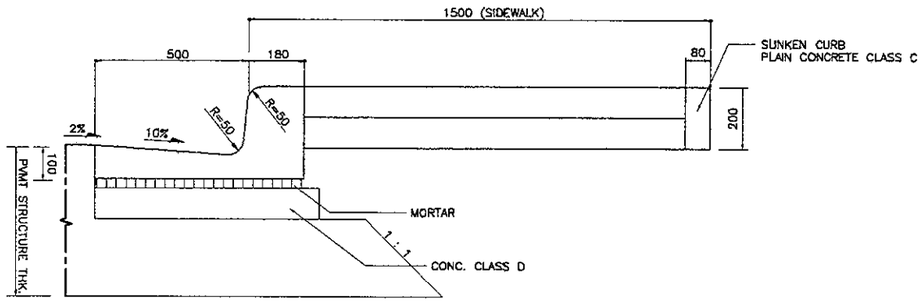

D - SECTION A-A
SCALE 1 : 20

1 - STANDARD PUBLIC AND PRIVATE ACCESS
SCALE 1 : 100

JICA JAPAN INTERNATIONAL COOPERATION AGENCY / KEI KATAHIRA & ENGINEERS INTERNATIONAL	DESIGNED BY	CHECKED BY	SUBMITTED BY	REPUBLIC OF INDONESIA MINISTRY OF PUBLIC WORKS DIRECTORATE GENERAL OF HIGHWAYS	PROJECT AND LOCATION :	SCALE :	DRAWING TITLE :	DRAWING NO :
	Name: R. UENO	Name: T. OKUMURA	Name: M. KIUCHI		DETAILED DESIGN STUDY OF NORTH JAVA CORRIDOR FLYOVER PROJECT GEBANG FLYOVER - CONTRACT PACKAGE 2 (NAGREG - GEBANG) WEST JAVA PROVINCE	AS SHOWN	STANDARD CONCRETE BARRIER AND MEDIAN IN FILL DETAILS	GRD-066
	Sign	Sign	Sign	APPROVED BY: Ir. HERRY VAZA M,Eng.Sc NIP. : 110038400		FULL SIZE A3		SHEET NO : 66 / 69
	Date	Date	Date	Sign / Date				

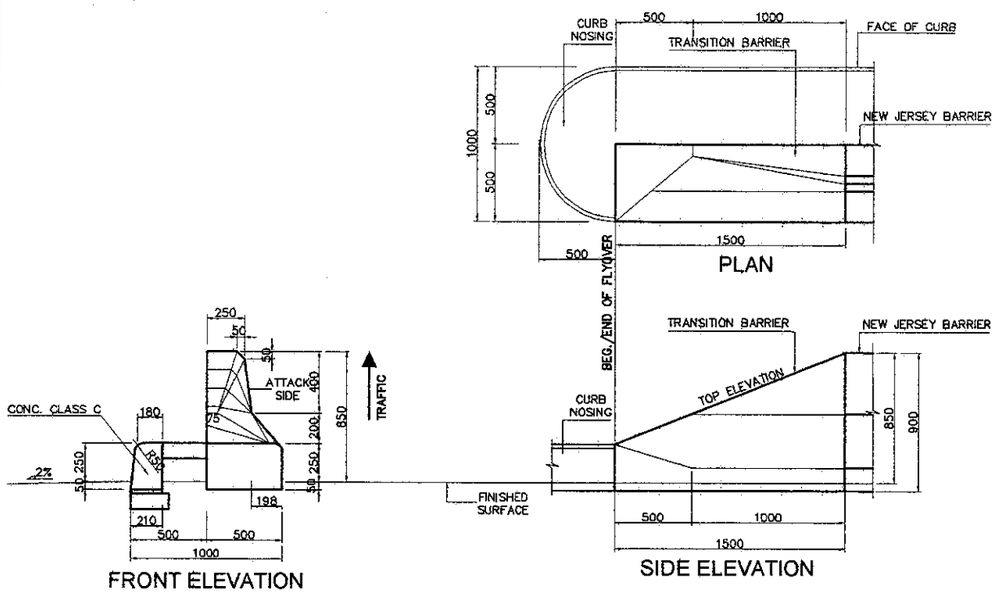

1 - TRANSITION PARAPET
SCALE 1:40

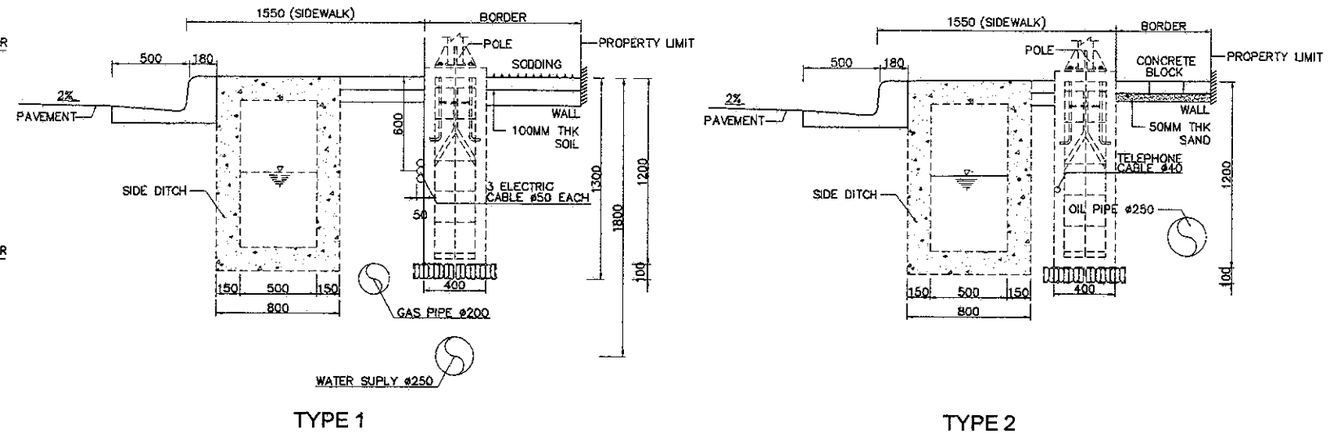

3 - SIDEWALK TO BORDER INFILL DETAILS
SCALE 1:40

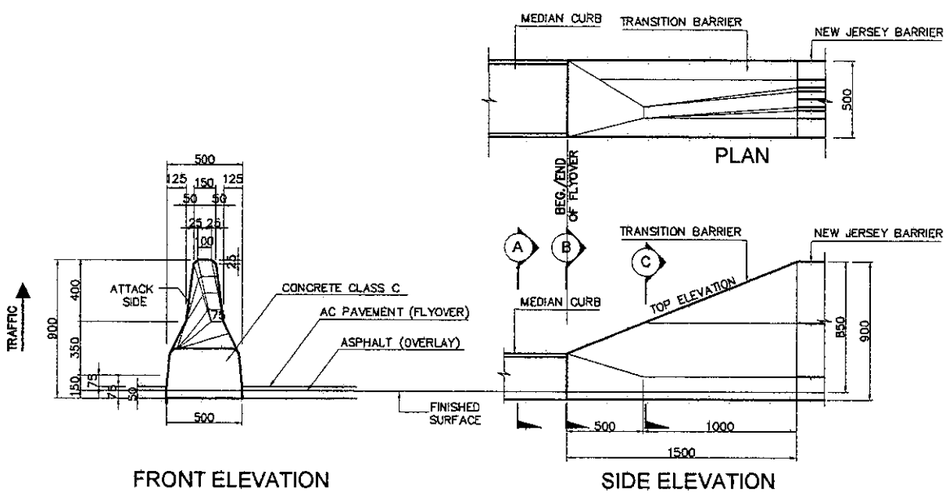

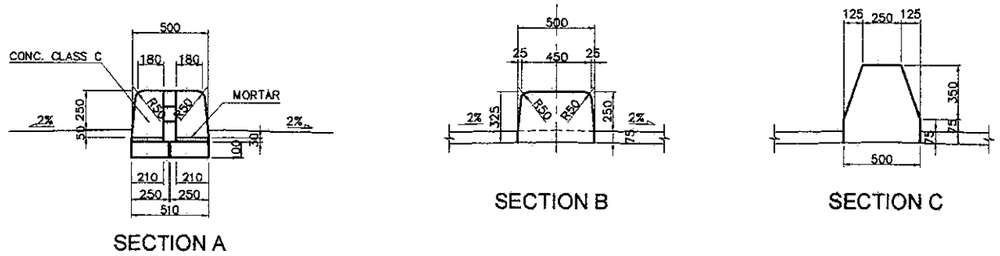

TRANSITION MEDIAN

2 - TRANSITION BARRIER
SCALE 1:40

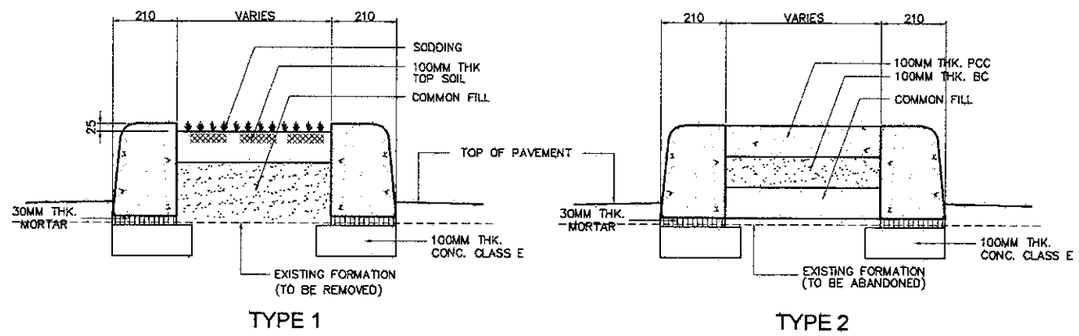

5 - MEDIAN INFILL DETAILS
SCALE 1:20

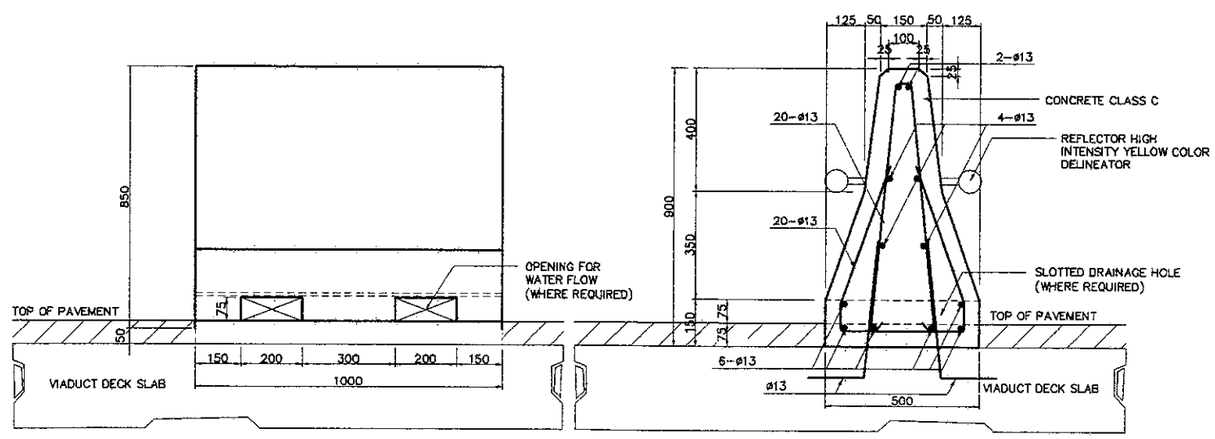

4 - NEW JERSEY BARRIER
SCALE 1:20

JICA JAPAN INTERNATIONAL COOPERATION AGENCY / KEI KATAHIRA & ENGINEERS INTERNATIONAL	DESIGNED BY: Name R. UENO, Sign, Date	CHECKED BY: Name T. OKUMURA, Sign, Date	SUBMITTED BY: Name M. KIUCHI, Sign, Date	REPUBLIC OF INDONESIA MINISTRY OF PUBLIC WORKS DIRECTORATE GENERAL OF HIGHWAYS	APPROVED BY: Ir. HERRY VAZA M,Eng.Sc, NIP. : 110038400, Sign, Date	PROJECT AND LOCATION : DETAILED DESIGN STUDY OF NORTH JAVA CORRIDOR FLYOVER PROJECT GEBANG FLYOVER - CONTRACT PACKAGE 2 (NAGREG - GEBANG) WEST JAVA PROVINCE	SCALE : AS SHOWN, FULL SIZE A3	DRAWING TITLE : STANDARD BRC FENCE AND STONE MASONRY RETAINING WALL	DRAWING NO : GRD-067	SHEET NO : 67 / 69

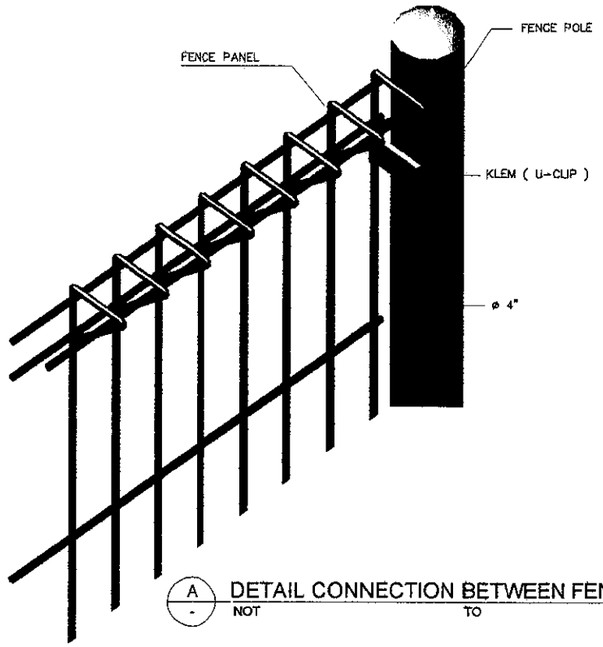

A DETAIL CONNECTION BETWEEN FENCE AND POLE
NOT TO SCALE

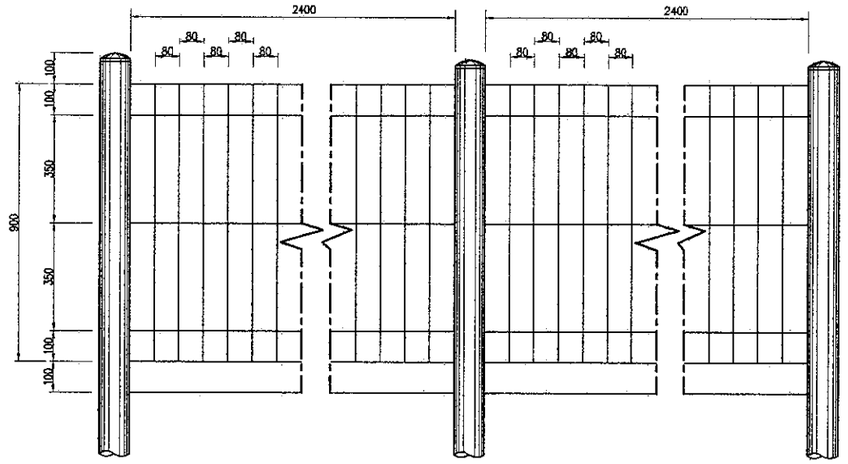

B BRC FENCE
SCALE 1 : 20

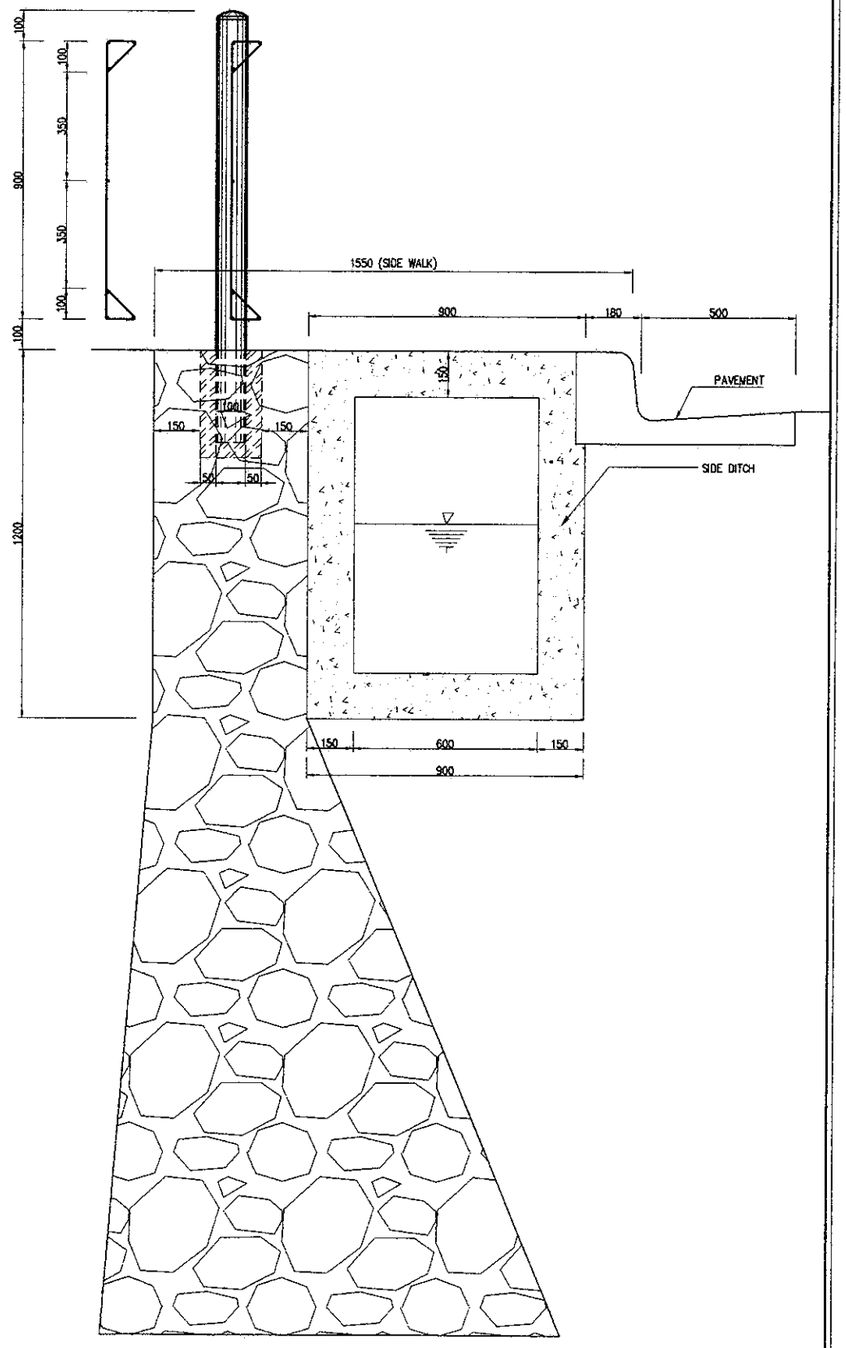

E DETAIL OF BRC FENCE FOUNDATION ON STONE MASONRY
SCALE 1 : 20

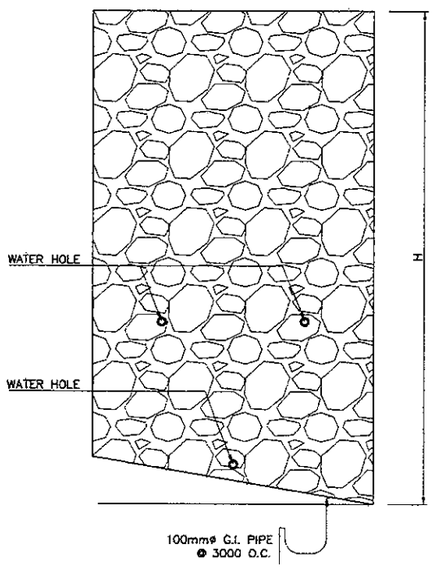

ELEVATION

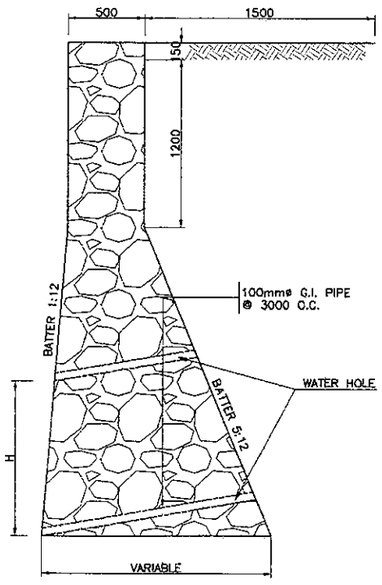

SECTION

C STONE MASONRY RETAINING WALL
SCALE 1 : 40

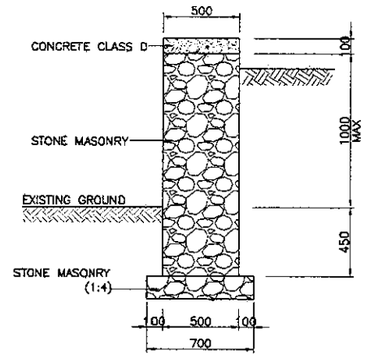

D DWARF STONE WALL (DSW) FOR CUT AND FILL
SCALE 1 : 40

TABLE

HEIGHT IN METERS	QUANTITIES PER LINEAR M OF WALL IN CU. METER
0.90	0.15
1.20	0.23
1.50	0.31
1.90	0.38
2.10	0.46
2.40	0.54
2.70	0.69
3.00	0.77
3.30	0.92

TABLE

HEIGHT IN METERS	QUANTITIES PER LINEAR M OF WALL IN CU. METER
3.60	1.15
3.90	1.30
4.20	1.45
4.50	1.68
4.80	1.91
5.10	2.14
5.40	2.37
5.60	2.68
6.00	2.91

MIN. BULDGE 2.50 CMS., MAX. BULDGE 10 CMS.
FEATHERED TO WORKING LINE AT JOINTS TO
BE RAKED TO A DEPTH OF 2.50 TO 5 CMS.

JAPAN INTERNATIONAL COOPERATION AGENCY KATAHIRA & ENGINEERS INTERNATIONAL	DESIGNED BY	CHECKED BY	SUBMITTED BY	REPUBLIC OF INDONESIA MINISTRY OF PUBLIC WORKS DIRECTORATE GENERAL OF HIGHWAYS	PROJECT AND LOCATION :	SCALE :	DRAWING TITLE :	DRAWING NO :
	Name: R. UENO	Name: T. OKUMURA	Name: M. KIUCHI		DETAILED DESIGN STUDY OF NORTH JAVA CORRIDOR FLYOVER PROJECT GEBANG FLYOVER - CONTRACT PACKAGE 2 (NAGREG - GEBANG) WEST JAVA PROVINCE	1 : 20	STANDARD CURB - CUT RAMP DETAILS	GRD-068
	Sign	Sign	Sign	APPROVED BY: Ir. HERRY VAZA M,Eng.Sc NIP. : 110038400				SHEET NO :
	Date	Date	Date	Sign / Date		FULL SIZE A3		68 / 69

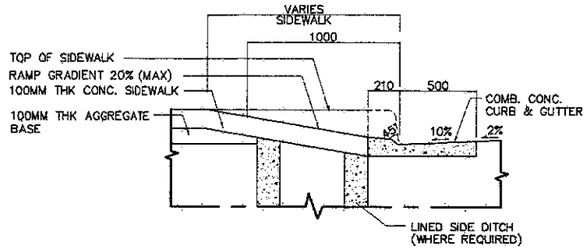

3 - SECTION 1-1
SCALE 1 : 20

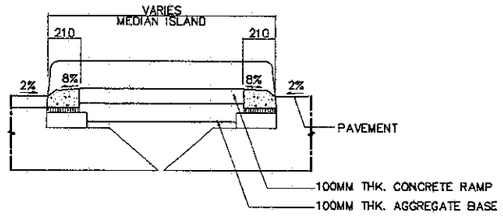

6 - SECTION 2-2
SCALE 1 : 20

SIDE WALK

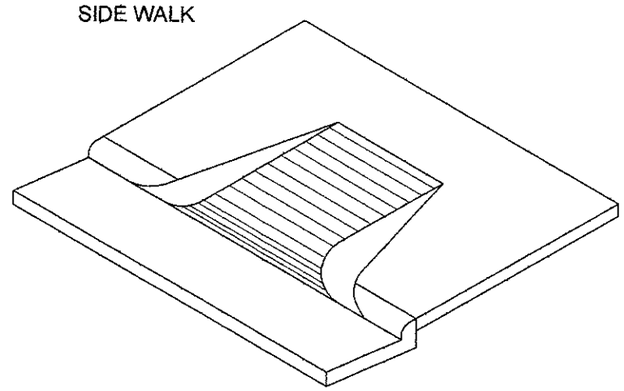

8 - ISOMETRIC
NOT TO SCALE

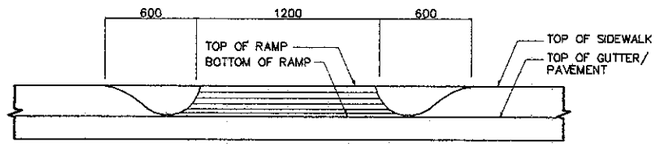

2 - ELEVATION
SCALE 1 : 20

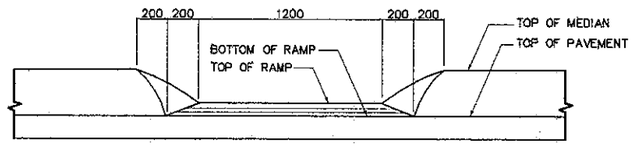

5 - ELEVATION
SCALE 1 : 20

MEDIAN

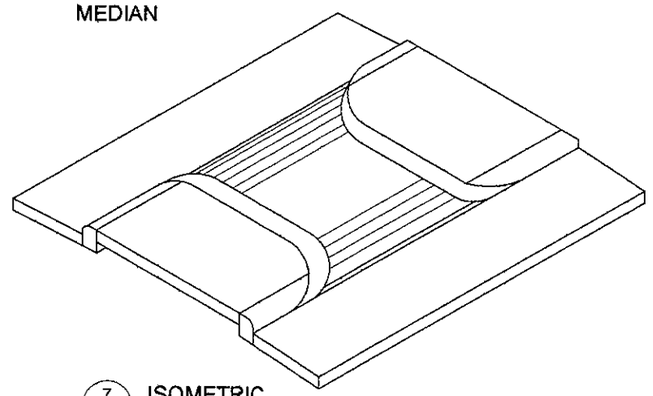

7 - ISOMETRIC
NOT TO SCALE

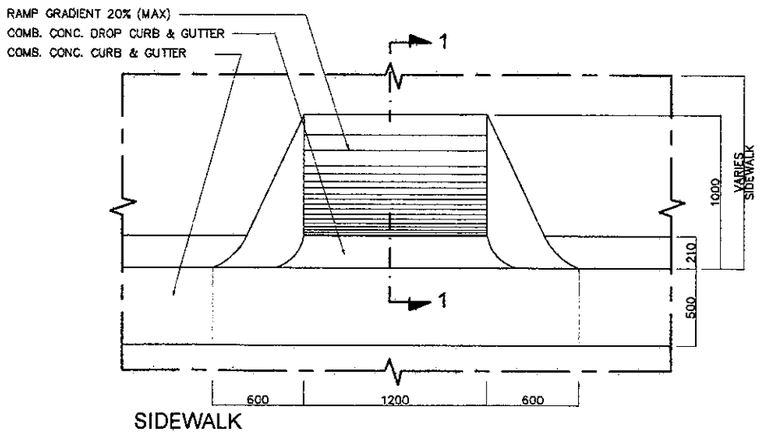

1 - PLAN
SCALE 1 : 20

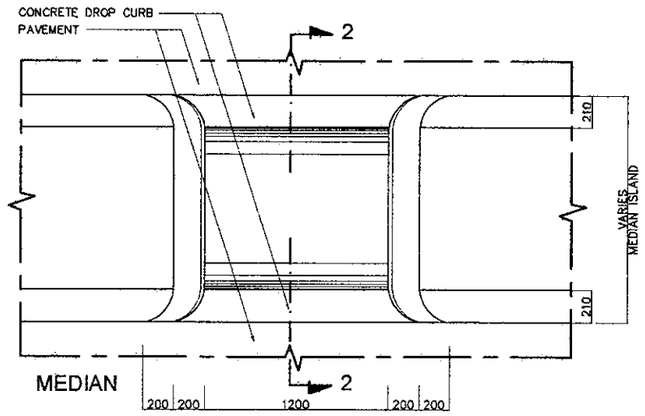

4 - PLAN
SCALE 1 : 20

A - STANDARD CURB-CUT RAMP (FOR PHYSICALLY HANDICAPPED)

JAPAN INTERNATIONAL COOPERATION AGENCY KATAHIRA & ENGINEERS INTERNATIONAL	DESIGNED BY	CHECKED BY	SUBMITTED BY	REPUBLIC OF INDONESIA MINISTRY OF PUBLIC WORKS DIRECTORATE GENERAL OF HIGHWAYS	PROJECT AND LOCATION :	SCALE :	DRAWING TITLE :	DRAWING NO :
	Name: R. UENO	Name: T. OKUMURA	Name: M. KIUCHI		DETAILED DESIGN STUDY OF NORTH JAVA CORRIDOR FLYOVER PROJECT GEBANG FLYOVER - CONTRACT PACKAGE 2 (NAGREG - GEBANG) WEST JAVA PROVINCE	AS SHOWN	STANDARD COLUMN PROTECTION DETAILS	GRD-069
	Sign	Sign	Sign	APPROVED BY: Ir. HERRY VAZA M,Eng.Sc NIP. : 110038400				SHEET NO :
	Date	Date	Date	Sign / Date		FULL SIZE A3		69 / 69

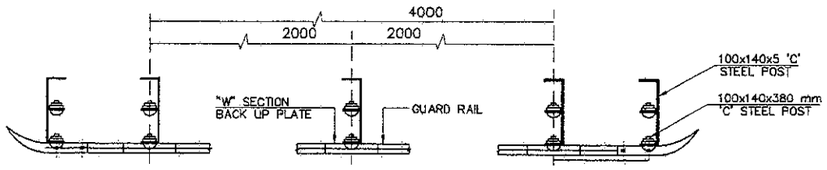

A - PLAN NOT TO SCALE

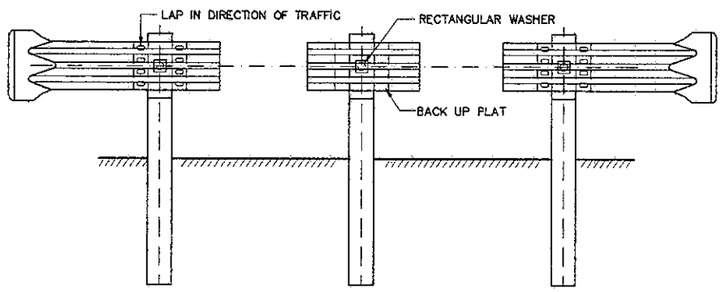

B - FRONT ELEVATION NOT TO SCALE

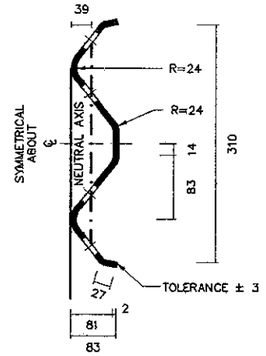

F - ENLARGED SECTION A-A (SECTION B-B, SIMILAR) NOT TO SCALE

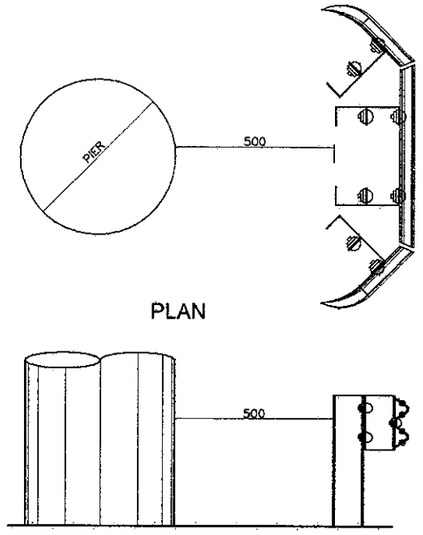

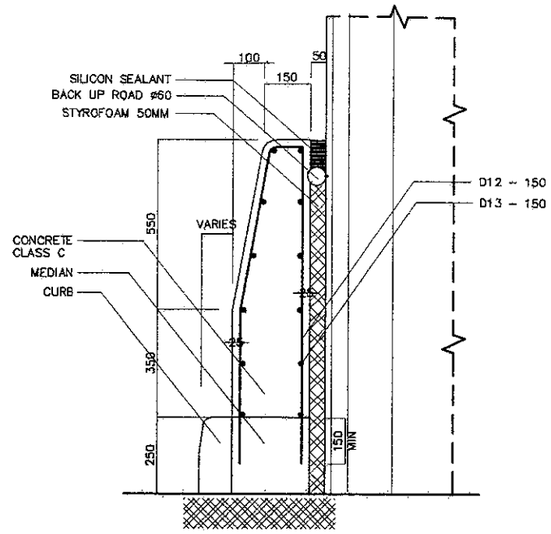

A - DETAIL 1 SCALE 1 : 20

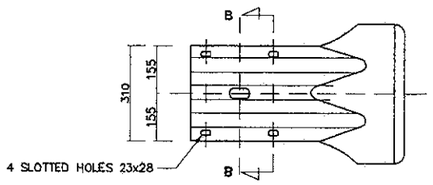

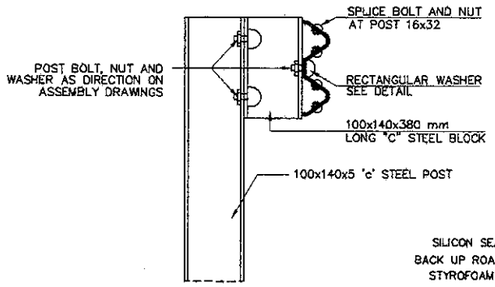

D - RAIL WASHER NOT TO SCALE

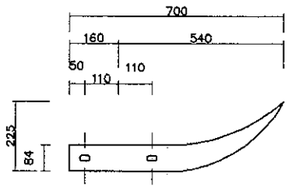

POST BOLTS AND HOLES		
HOLE DIA. (mm)	POST BOLTS AND NUTS (mm)	WASHER
18	16x45	RECT / PLATE

E - DOWN STREAM END TREATMENT NOT TO SCALE

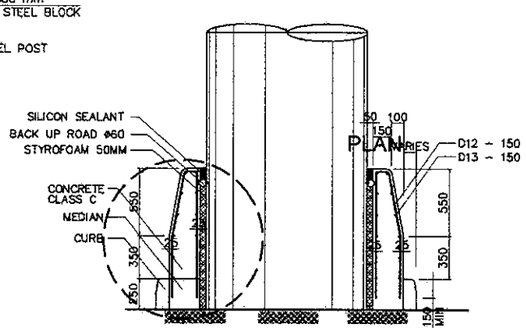

SECTION

1 - STEEL BEAM GUARD RAIL & RAIL DETAILS TYPE 2 NOT TO SCALE

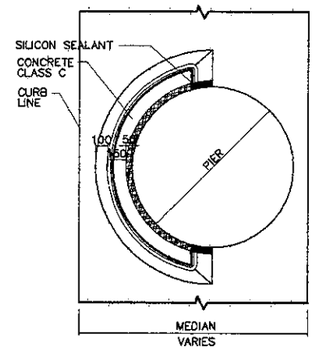

PLAN

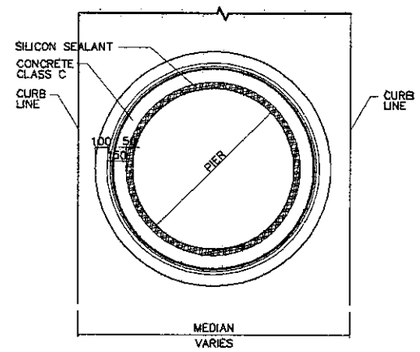

PLAN

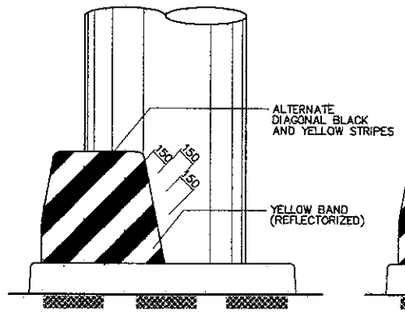

ELEVATION

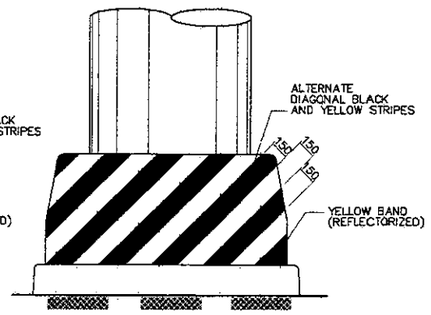

ELEVATION

2 - CONCRETE COLUMN PROTECTION TYPE 1 SCALE 1 : 50