Chapter 3

PAST EARTHQUAKES AND TSUNAMI IN INDONESIA

3.1 EARTHQUAKE RECORD

Sumatra area is earthquake-prone area. Epicenter locations of past earthquake from 1973 to 2003 (30 years) are shown in **Figure 3.1-1**. At the offshore of West Sumatra, there exists subduction boundary where Indian-Australian Plate is subducting under South-East Asian Plat at a speed of 6cm per year. Along this subduction boundary, huge earthquakes with magnitude of more than 7.5 occurred many times in the past.

3.2 TSUNAMI RECORD

Tsunami caused by earthquake also attacked Indonesia many times as shown in **Figure 3.1-2**. Many tsunamis were experienced particularly in the east areas of Indonesia. In Aceh Province, tsunami attacked in 1967, then after 37 years, December 26, 2004 tsunami occurred.

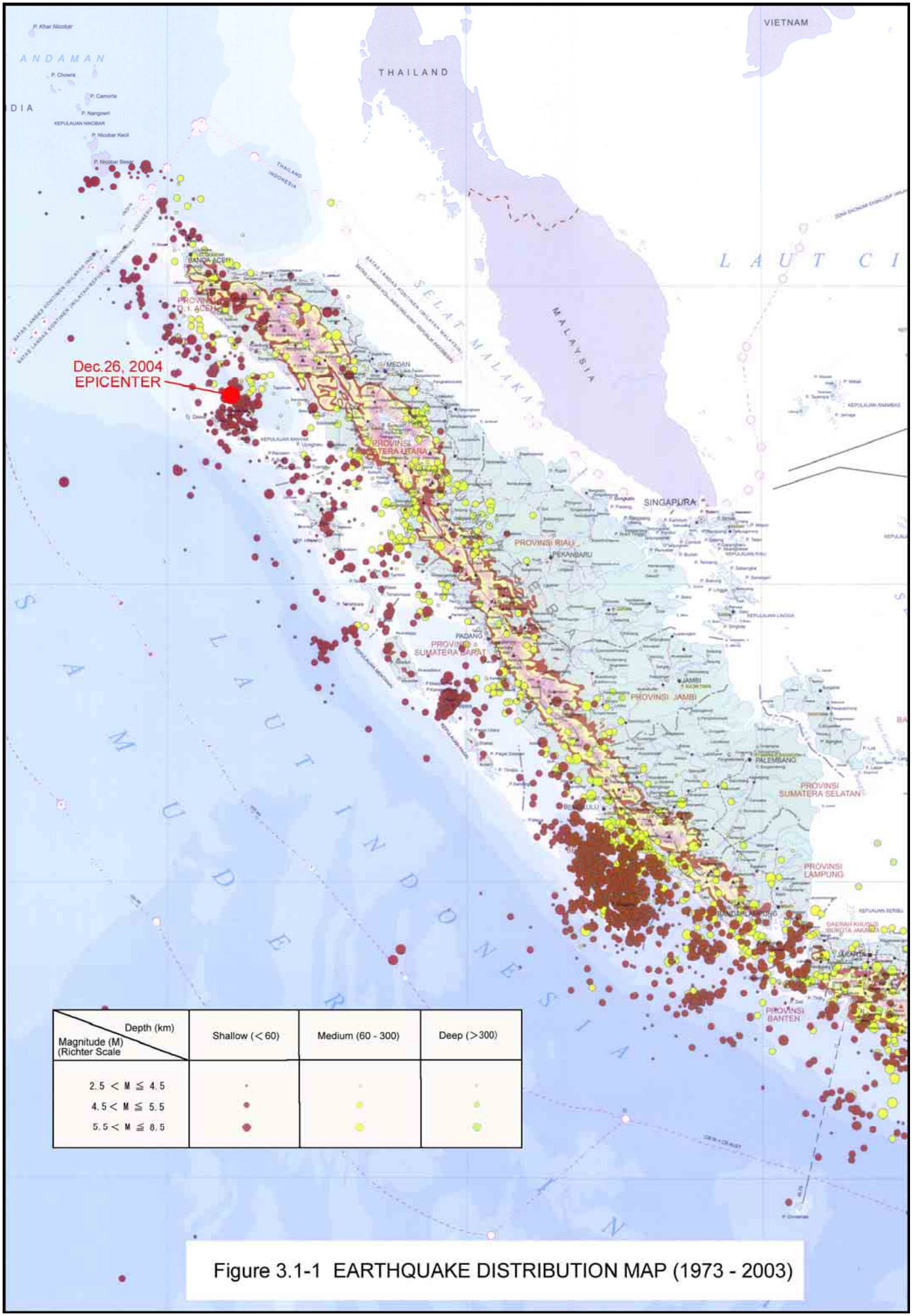

Figure 3.1-1 EARTHQUAKE DISTRIBUTION MAP (1973 - 2003)

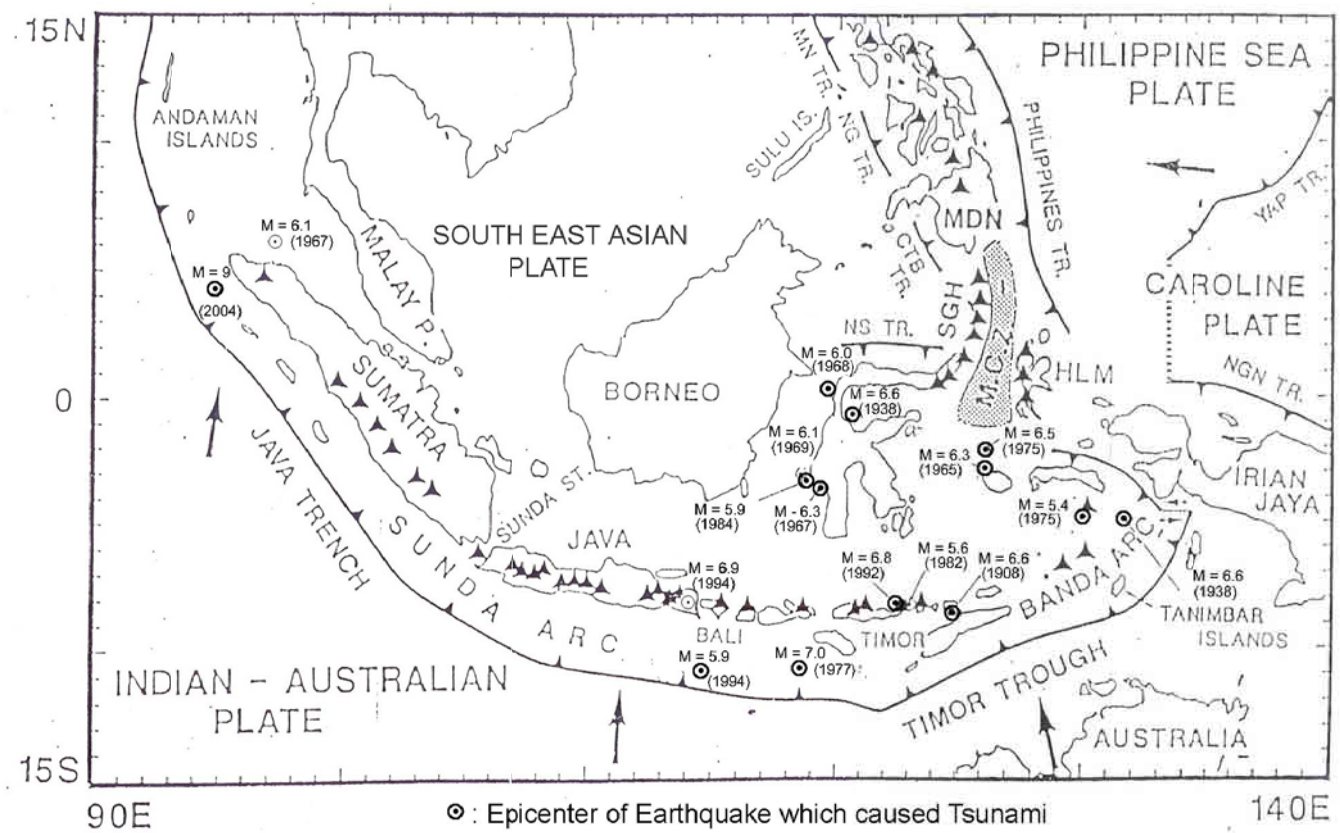

EARTHQUAKES WHICH CAUSED TSUNAMI

No.	Provinces/Regency/Islands	Year	Magnitude
1.	NTT/Alor Island	1908	6.6
2.	Tanibar Island	1938	6.6
3.	Tomini Gulf	1938	6.6
4.	Buru Island (Maluku)	1938	6.3
5.	Langsa (Aceh)	1967	6.1
6.	Majene (South Sulawesi)	1967	6.3
7.	Toli-Toli (Central Sulawesi)	1967	6.0
8.	Mamuju (South Sulawesi)	1969	6.1
9.	Kasi Uli	1975	5.4
10.	Sulabesi	1975	6.5
11.	South of Sumba Island	1977	7.0
12.	Prilon Besar (Flores Island)	1982	5.6
13.	Mamuju (South Sulawesi)	1984	5.9
14.	Alamelo Island	1992	6.8
15.	South of Bali Indian	1994	5.9
16.	Banyuwangi (East Java)	1994	6.9
17.	26 Dec Aceh	2004	9.0

Figure 3.1-2 TECTONIC MAP AND TSUNAMI LOCATION

Chapter 4

PROJECT ROAD DAMAGE BY TSUNAMI

4.1 MAGNITUDE OF DAMAGE

4.1.1 Number of Fatalities

Victims of Tsunami reached to about 174,000 Aceh Province people as shown in **Table 4.1-1** and **Figure 4.1-1**. Worst affected is the West Coast Area, particularly Banda Aceh City where 29% of citizens were dead or missing followed by Kab. Aceh Besar and Kab. Aceh Jaya where more than 17% of residents were victimized.

TABLE 4.1-1 NUMBER OF FATALITIES

		Population (2004)	No. of Dead or Missing	% Share to Population
West Coast Area	Kota Banda Aceh	269,091	78,417	29.1
	Kab. Aceh Besar	306,718	53,136	17.3
	Kab. Aceh Jaya	111,671	19,661	17.6
	Kab. Aceh Barat	97,523	11,830	12.1
	Kab. Nagan Raya	152,748	493	0.3
	Kab. Aceh Barat Daya	153,411	835	0.5
	Kab. Aceh Selatan	167,052	6	0.004
	Kab. Aceh Singkil	174,007	73	0.04
	Sub-total	**1,432,221**	**164,451**	**11.5**
East Coast Area	Kab. Pidic	517,452	4,646	0.9
	Kab. Bireuen	350,964	1,488	0.4
	Kab. Aceh Utara	395,800	2,217	0.6
	Kota Lhokeumawe	156,478	394	0.3
	Kab. Aceh timr	253,151	224	0.1
	Kab. Langsa	141,138	-	-
	Kab. Aceh Tamiang	238,718	-	-
	Sub-total	**2,053,701**	**8,969**	**0.4**
Island	Kab. Sabang	27,447	18	0.06
	Kab. Simeulue	76,629	22	0.02
	Sub-total	**104,076**	**40**	**0.04**
Inland Area	Kab. Aceh Tengah	158,641	192	0.1
	Kab. Bener Meriah	120,000	36	0.03
	Kab. Aceh Tenggara	168,034	26	0.02
	Kab. Gayo Lues	67,514	27	0.04
	Sub-total	**514,189**	**281**	**0.04**
TOTAL		**4,104,187**	**173,741**	**4.2**

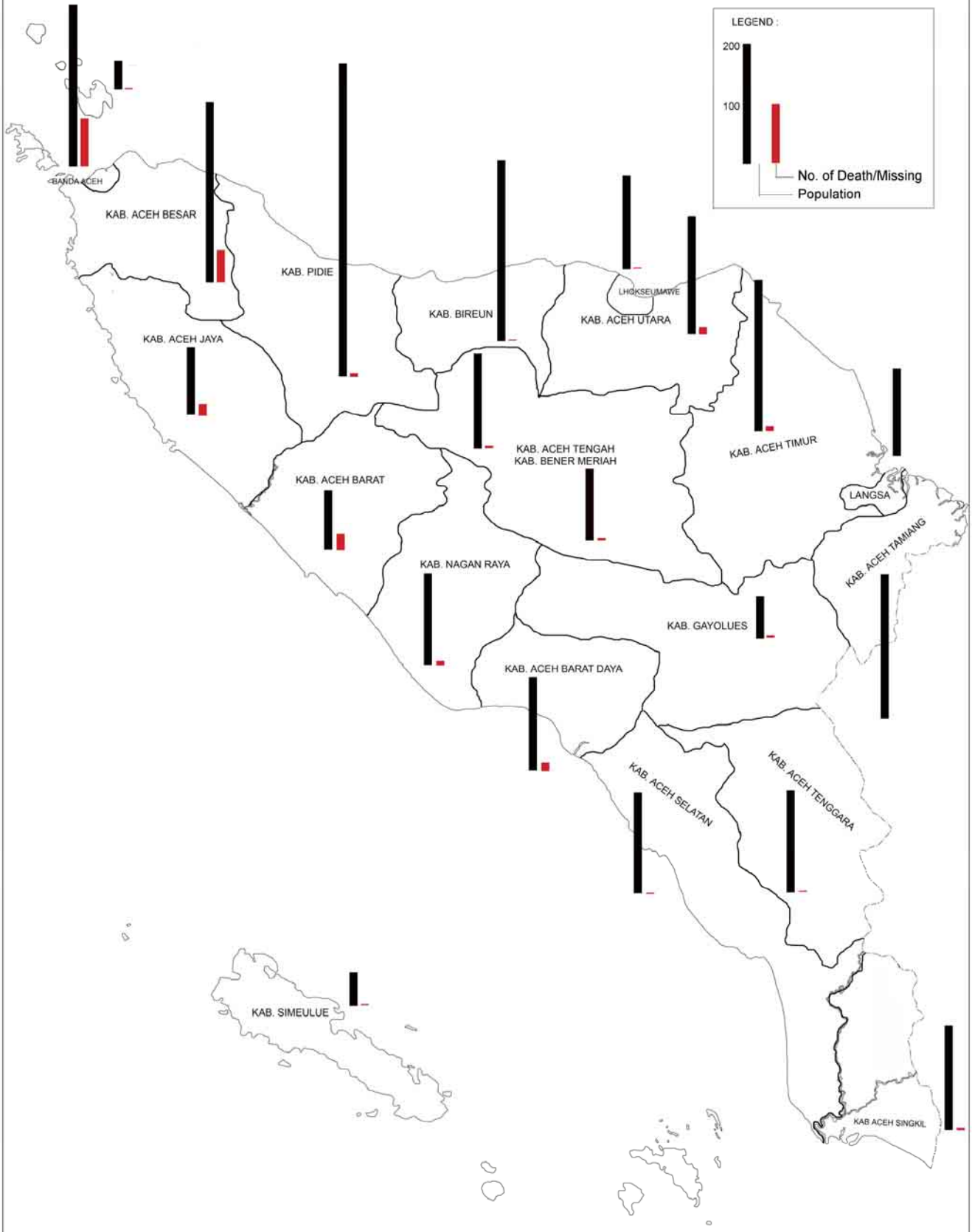

Figure 4.1 - 1 TSUNAMI FATALITIES IN THE PROVINCE OF NANGGROE ACEH DARUSSALAM

4.1.2 Project Road Damages

Just after tsunami, the Public Works Office of Banda Aceh undertook the damage survey and damages of the West Coast Road from Banda Aceh to Meulaboh (Total Length = 247km) were identified as follows:

Road

- Impassable ..... 89.7 km
- Passable but damaged ..... 94.1 km
- No damage ..... 63.2 km

Total **247.0 km**

Bridges

	No.	Length (m)
• Washed out or collapsed	76	2,300
• Damaged	7	118
• No damage (mostly outside Tsunami affected area)	59	900
Total	**142**	**3,318**

Tsunami affected areas which were delineated based on satellite photographs, and road/bridge damaged sections are shown in **Figure 4.1-2**.

4.2 DAMAGE ANALYSIS

4.2.1 Factors Affecting Tsunami Damage

Following factors were selected to assess how such factors were related to tsunami damages:

- Distance from the coast line
- Distance Tsunami reached
- Local topography
- Angle between the coast line and a road/bridge
- Type of superstructure for bridge damage

Road damages were classified into 5 categories based on magnitude of damage. Relation between magnitude of road damage and above factors was assessed as shown in **Table 4.2-1**.

For bridges with bridge length over (one) similar assessment as road damages was undertaken and shown in **Table 4.2-2**.

4.2.2 Road Damage Analysis

1) Road Damage Classification

Road damages were classified into five categories in accordance with the magnitude of damage as shown in **Table 4.2-3**. The magnitude of damage of each road section was assessed based on video tape images taken from the helicopter.

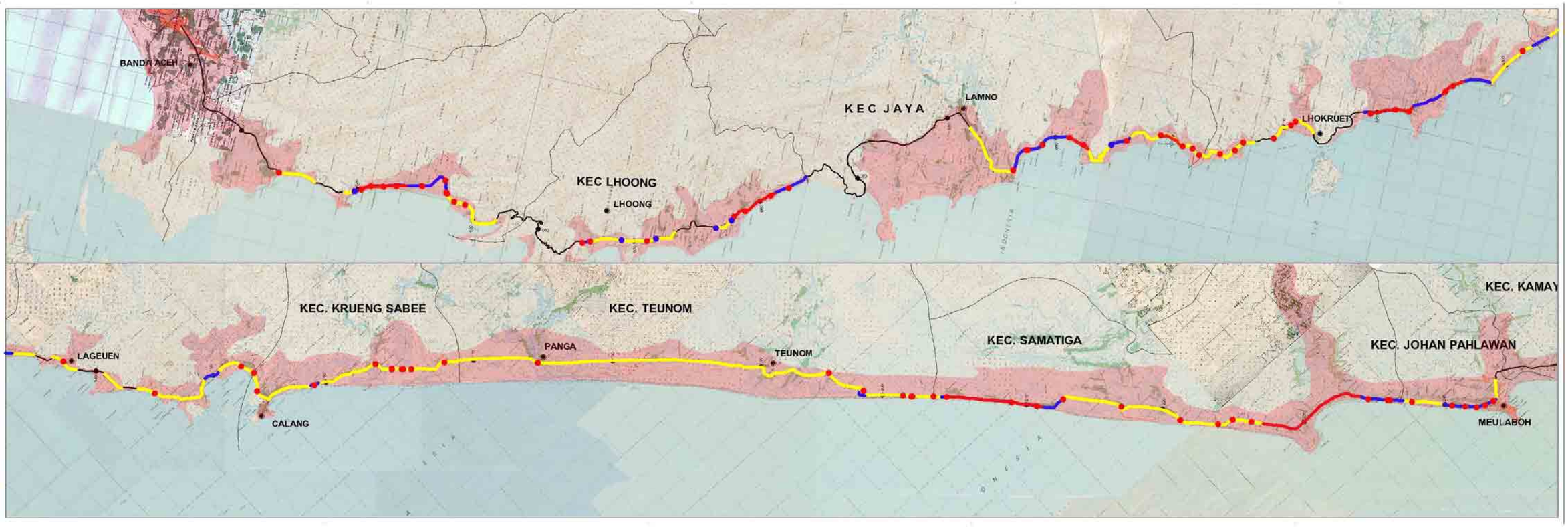

LEGEND:

Road	Washed-out	:	29.6 km
	Totally Damaged:		60.1 km
	Damaged	:	120.1 km
Bridge	Washed-oout	:	76 Bridges
	Damaged	:	7 Bridges

: Tunami affected area

Figure 4.1-2 TUSUNAMI AFFECTED AREA AND ROAD/BRIDGE DAMAGE

TABLE 4.2 - 1 (1/2) ROAD DAMAGE ANALYSIS

Location (From ~ To)	Length (km)	Road Damage	Distance from Coast Line	Tsunami Affected Distance (km)	Type of Terrain	Angle to Coast Line	Land Use from Coast Line to Road	Remarks
0+000 ~ 7+000	7.00	Minor Damage	3.2	3.5	Flat	Parallel	Residential	
7+000 ~12+960	5.96	Minor Damage	1.4 ~ 6.5	N.A (Perpendicular)	Shallow Valley/Flat	Perpendicular	Residential	
12+960 ~ 13+110	0.15	Minor Damage	1.0 ~ 1.3	4.0	Flat	Perpendicular	Residential	
13+110 ~ 14+160	1.05	No Damage	0.5 ~ 0.9	4.0	Flat	Diagonal	Residential	
14+160 ~ 17+070	2.91	Medium Damage	0.4 ~ 0.1	2.0 ~ 0.3	Flat/Slope	Parallel	Agriculture	
17+070 ~ 19+600	2.53	Minor Damage	0.1 ~ 1.0	0.3 ~ 1.0	Flat~Rolling	Parallel	Agriculture	
19+600 ~ 21+000	1.40	Total Damage	0.3 ~ 0.4	0.6 ~ 1.2	Flat/Slope	Parallel	Agriculture/Residential	
21+000 ~ 26+000	5.00	Road Submerged	0.4 ~1.2	1.2 ~ 2.5	Valley	Diagonal	Agriculture	Road runs parallel to a river
26+000 ~ 26+800	0.80	Minor Damage	1.2 ~04	1.5 ~ 0.6	Slope	Diagonal	Agriculture/Residential	
26+800 ~ 27+900	1.10	Medium Damage	0.4 ~ 0.2	0.6 ~ 0.5	Slope	Parallel	Agriculture	
27+900 ~ 28+700	0.80	Minor Damage	0.2 ~ 0.5	0.5 ~ 0.5	Slope	Parallel	Agriculture	
28+700 ~ 31+200	2.50	Medium Damage	0.5 ~ 0.15	0.5 ~ 0.15	Slope	Diagonal/Parallel	Agriculture	
31+200 ~ 45+000	13.80	No Damage	0.15 ~ 1.3	0.15 ~ 1.3	Mountanous	Parallel	Agriculture	• Passes through outside of tsunami affected area
45+000 ~ 45+500	0.50	Total Damage	1.3 ~ 1.0	1.3 ~ 1.2	Valley	Diagonal	Agriculture	
45+500 ~ 49+500	4.00	Medium Damage	1.0 ~ 0.8	1.2 ~ 0.8	Flat/Slope	Parallel	Agriculture	
49+500 ~ 50+100	0.60	No Damage	~	~	Slope	~	Agriculture	• Passes through outside of tsunami affected area
50+100 ~ 53+000	2.90	Medium Damage	0.8 ~1.7	0.8 ~ 2.1	Flat	Diagonal	Agriculture/Residential	
53+000 ~ 56+500	3.50	Minor Damage	1.7 ~ 10	2.1 ~ 2.5	Flat	Diagonal	Agriculture/Residential	
56+500 ~ 58+500	2.00	Medium Damage	1.0 ~ 0.4	2.5 ~ 1.5	Flat	Parallel	Agriculture/Residential	
58+500 ~ 60+000	1.50	Road Submerged	0.4 ~ 0.1	1.5 ~ 0.4	Shallow Valley/Flat	Parallel	Agriculture	
60+000 ~ 63+300	3.30	Road Submerged	0.1 ~ 0.1	0.3 ~ 0.3	Narrow Flat/Slope	Parallel	Agriculture/Residential	
63+300 ~ 73+100	9.80	No Damage	~	~	Mountanous	~	Forest	• Passes through outside of tsunami affected area
73+100 ~ 78+000	4.90	No Damage	4.8 ~ 4.7	4.8 ~ 4.7	Flat/Slope	Parallel	Agriculture	• Mostly runs along the boundary of tsunami affected area.
78+000 ~ 79+500	1.50	No Damage	~	~	Mountanous	Parallel	Forest	• Passes through outside of tsunami affected area
79+500 ~ 82+000	2.50	No Damage	5.0 ~ 4.0	5.1 ~ 5.4	Flat	diagonal	Agriculture	
82+000 ~ 86+100	4.10	Medium Damage	4.0 ~ 0.2	5.4 ~ 3.5	Flat	Perpendicular	Agriculture/Residential	• Runs along a river
86+100 ~ 92+600	6.50	Total Damage	0.2 ~ 0.2	3.5 ~ 0.3	Flat/Slope,Flat	Parallel	Agriculture	
92+600 ~94+100	1.50	Medium Damage	0.2~0.5	0.3~0.5	Narrow Flat/Slope	Parallel	Agriculture	
94+100 ~ 95+400	1.30	Total Damage	0.5 ~ 0.5	0.5 ~ 0.6	Narrow Flat/Slope	Parallel	Agriculture	
95+400 ~ 98+800	3.40	Medium Damage	0.5 ~ 0.2	0.6 ~ 0.7	Flat	Parallel	Agriculture	
98+800 ~ 101+000	2.20	Total Damage	0.2 ~ 0.2	0.7 ~ 0.7	Narrow Flat/Shallow Valley2	Parallel	Agriculture	

TABLE 4.2 - 1 (2/2) ROAD DAMAGE ANALYSIS

Location (From ~ To)	Length (km)	Road Damage	Distance from Coast Line	Tsunami Affected Distance (km)	Type of Terrain	Angle to Coast Line	Land Use from Coast Line to Road	Remarks
101+000 ~ 103+000	2.00	Medium Damage	0.2 ~ 0.3	0.7 ~ 0.7	Flat/Slope	Parallel	Agriculture	
103+000 ~ 113+700	10.70	Total Damage	0.3 ~ 0.1	0.7 ~ 0.3	Narrow Flat/Slope, Shallow Valley	Parallel	Agriculture	
113+700 ~ 116+700	3.00	No Damage	0.1 ~ 0.3	0.3 ~ 0.3	Rolling	Parallel	Agriculture	Tsunami didn't reach to the road
116+700 ~ 118+600	1.90	Medium Damage	0.3 ~ 0.8	0.3 ~ 0.8	Flat/Slope	Parallel/Diagonal	Agriculture	
118+600 ~ 120+500	1.90	Total Damage	0.8 ~ 0.1	0.8 ~ 2.9	Flat	Parallel/Diagonal	Agriculture	
120+500 ~ 122+500	2.00	Road Submerged	0.1 ~ 1.2	2.9 ~ 4.4	Flat/Shallow Valley	Parallel	Agriculture/Residential	The section is located between two rivers.
122+500 ~ 124+500	2.00	Total Damage	1.2 ~ 0.3	4.4 ~ 3.0	Flat	Parallel	Agriculture	Small mountains between coast line and the road
124+500 ~ 126+500	2.00	Road Submerged	0.3 ~ 0.1	3.0 ~ 3.0	Flat	Paralle	Agriculture	
126+500 ~ 128+400	1.9	Total Damage	0.1 ~ 0.1	3.0 ~ 0.8	Flat	Parallel	Agriculture/Residential	
128+400 ~ 131+500	3.1	Medium Damage	0.1 ~ 0.2	0.8 ~ 0.5	Narrow Flat/Slope	Parallel	Agriculture	
131+500 ~ 134+400	2.90	Total Damage	0.2 ~ 0.25	0.5 ~ 0.8	Flat/Slope	Parallel	Agriculture	
134+400 ~ 137+500	3.10	Minor Damage	0.25 ~ 0.40	0.8 ~ 0.6	Flat/Slope	Parallel/Diagonal	Agriculture	
137+500 ~ 139+400	1.90	Medium Damage	0.4 ~ 0.1	0.6 ~ 0.2	Flat/Slope	Parallel	Agriculture	
139+400 ~ 140+600	1.20	Minor Damage	0.1 ~ 0.5	0.2 ~ 0.9	Flat/Slope	Diagonal	Agriculture	
140+600 ~ 141+200	0.60	Medium Damage	0.5 ~ 1.1	0.9 ~ 1.4	Rolling	Diagonal	Agriculture	• Small hills between the coast line and the road
141+200 ~ 142+200	1.00	Minor Damage	1.1 ~ 0.15	1.4 ~ 0.5	Rolling	Diagonal	Agriculture	• Small hills between the coast line and the road
142+200 ~ 148+200	6.00	Medium Damage	0.15 ~ 0.1	0.5 ~ 1.1	Flat/Slope	Parallel/Diagonal	Agriculture	
148+200 ~ 154+400	6.20	Total Damage	0.1 ~ 0.8	1.1 ~ 2.2	Shallow Valley, Flat	Parallel	Agriculture/Residential	• Road along the small bay • A river and lagoons
154+400 ~ 158+700	4.30	Medium Damage	0.8 ~ 0.1	2.2 ~ 2.0	Flat	Parallel	Agriculture	
158+700 ~ 159+300	0.60	Total Damage	0.1 ~ 0.15	2.0 ~ 1.3	Flat	Parallel	Agriculture	• The road runs a narrow area between the sea and a lagoon
159+300 ~ 198+400	39.1	Medium Damage	0.15 ~ 1.1 ~ 0.4	1.3 ~ 1.8 ~ 1.7	Flat	Parallel	Agriculture	• Several rivers and lagoons
198+400 ~ 204+200	5.8	Total Damage	0.4 ~ 0.1	1.7 ~ 1.4	Flat	Parallel	Agriculture	
204+200 ~ 211+000	6.8	Road Submerged	0.1 ~ 0.1	1.4 ~ 2.3	Flat	Parallel	Agriculture	
211+000 ~ 213+000	2.0	Total Damage	0.1 ~ 0.9	2.3 ~ 3.0	Flat	Diagonal	Agriculture	
213+000 ~ 221+700	8.7	Medium Damage	0.9 ~ 0.3	3.0 ~ 1.7	Flat	Parallel/Diagonal	Agriculture	• Rivers and lagoons
221+700 ~ 225+000	3.3	Total Damage	0.3 ~ 0.2	1.7 ~ 1.2	Flat	Parallel	Agriculture	• The road passes through the narrow area between the sea and lagoons
225+100~234+000	9.0	Road Submerged	0.2~0.3	1.2~1.5	Flat/Shallow Valley	Parallel	Agriculture	Rivers and Lagoons
234+000 ~ 236+500	2.5	Total Damage	0.3 ~ 0.1	1.5 ~ 1.4	Flat	Parallel	Agriculture	• The road passes through the narrow area between the sea and lagoons
236+500 ~ 238+600	2.1	Medium Damage	0.1 ~0.2	1.4 ~ 1.6	Flat	Parallel	Agriculture/Residential	• The road passes through the narrow area between the sea and lagoons
238+600 ~ 242+000	3.4	Total Damage	0.2 ~ 0.1	1.6 ~ 2.0	Flat	Parallel	Agriculture	
242+000 ~ 243+400	1.4	Total Damage	0.1 ~ 0.7	2.0 ~ 2.2	Flat	Diagonal	Residential	
243+400 ~ 247+000	3.6	Total Damage	0.7 ~ 0.9	2.2 ~ 0.9	Flat/Shallow Valley	Parallel	Agriculture/Residential	• One river

TABLE 4.2 - 2 (1/3) BRIDGE DAMAGE ANALYSIS

(Bridge Length over 10 m)

Serial No. of Bridge	Bridge Name (Location)	Superstructure Type	Substructure Type	Bridge Length (m) (Bridge Width, m)	Damage Condition	Distance from Coast Line	Tsunami Affected Distance (km)	Type of Terrain	Angle to Coast Line	Remarks
1	KR GOHENG (2+300)	PC Girder	Driven Pile	21.7 (14.0)	No Damage	3.3	5.8	Flat	Parallel	
2	KR. LAMTEMEN (3+330)	RC Girder	Driven Pile	12.0 (12.0)	No Damage	3.4	5.0	Flat	Parallel	
13	KR. RABA (14+160)	Steel Truss	Driven Pile	68.0 (9.0)	Washed Out	0.4	2.1	Flat	Slightly Diagonal	
14	KR BALEE (16+930)	Box Culvent	Driven Pile	17.0 (9.0)	No Damage	0.1	1.4	Shallow Valley	Parallel	
15	MON KLENG (16+930)	RC Slab	Driven Pile	10.0 (7.0)	No Damage	0.1	0.5	Shallow Valley	Parallel	
16	KR. RITING (19+600)	RC Girder	Driven Pile	25.0 (6.0)	Washed Out	0.3	0.6	Flat/Slope	Parallel	
17	KR. BRUK (20+120)	RC Girder	Driven Pile	10.0 (6.3)	Totally Damaged	0.3	0.6	Flat/Slope	Parallel	
18	KR. LEUPUNG (20+900)	RC Girder	Driven Pile	13.0 (7.0)	Washed Out	0.4	0.9	Flat/Slope	Parallel	
20	GANTANG PIRAK (22+ 550)	RC Girder	Caisson	25.0 (9.0)	Washed Out	0.4	1.0	Flat/Slope	Parallel	
21	KR. MESJID (24+040)	RC Girder	Driven Pile	19.8 (6.6)	Washed Out	0.5	1.4	Shallow Valley	Parallel	
23	KR. LHOK NGA (25+980)	Steel Truss	Caisson	80.0 (9.0)	Washed Out	1.4	2.7	Valley	Diagonal	
25	KR. PEULOT (27+840)	RC Girder	Caisson	40.0 (9.0)	Totally Damaged	0.1	0.4	Flat/Slope	Parallel	
29	KR. KEUNAWEUT (33+920)	RC Girder	Caisson	22.0 (9.0)	No Damage	1.5	1.2	Mountanous	Parallel	Tsunami didn't reach to the bridge
32	ALUE RAMBUNG II (38+650)	RC Slab	Caisson	10.0 (9.0)	No Damage	1.8	0.9	Mountanous	Diagonal	Tsunami didn't reach to the bridge
37	LAM ILIE (46+660)	Steel Truss	Driven Pile	35.0 (7.0)	Washed Out	1.0	2.8	Valley	Diagonal	
38	KR. KALA (46+660)	Steel Truss	Driven Pile	40.0 (7.0)	Washed Out	0.9	2.1	Valley	Diagonal	
39	KR. MOP (49+170)	RC Slab	Driven Pile	11.0 (7.0)	Washed Out	0.6	1.0	Shallow Valley	Diagonal	
40	LUENG IE (50+810)	RC Girder	Driven Pile	18.0 (9.0)	Superstructure moved 1 m upstream side	0.5	2.0	Valley	Diagonal	
41	LAM ARA (52+450)	RC Girder	Driven Pile	18.0 (9.0)	Superstructure moved 1 m upstream side	0.7	2.5	Flat	Diagonal	
43	KR. LHONGI (54+570)	Steel Truss	Caisson	83.0 (9.0)	Damage	1.5	2.7	Flat	Parallel	
46	KR. CUNIEM (57+050)	Steel Girder	Driven Pile	80.0 (7.0)	Superstructure moved 2 m upstream side	1.1	2.3	Flat	Diagonal	
47	KR. LHONGI (58+880)	Steel Truss	Driven Pile	20.0 (9.0)	Washed Out	0.2	1.5	Flat	Diagonal	
50	LHOK KAREUNG (63+340)	Steel Truss	Driven Pile	35.0 (6.0)	Washed Out	0.2	0.5	Valley	Diagonal	
51	KR. SAPEK (74+740)	Steel Truss	Driven Pile	35.0 (7.0)	No Damage	4.2	4.7	Valley	Parallel	
52	KR. LAMBADO (75+650)	Box Culvent	Driven Pile	11.5 (7.0)	No Damage	3.7	3.7	Valley	Parallel	
53	KR. BABAH DUA (83+070)	Stell Truss	Driven Pile	61.0 (6.0)	No Damage	2.7	3.7	valley	Diagonal	
54	KR. ULEE DONG (84+350)	Box Culvent	Driven Pile	11.0 (6.3)	No Damage	1.6	3.4	Valley	Diagonal	
55	KR. LAMBEUSO (85+150)	Steel Truss	Driven Pile	160.0 (6.0)	Washed Out	0.1	2.6	Flat	Parallel	
57	KR. LUBOK (89+420)	Steel Truss	Driven Pile	45.0 (6.0)	Washed Out	0.1	0.4	Flat/Slope	Parallel	
58	KR. IKEUN (90+750)	Steel Truss	Driven Pile	50.9 (6.0)	Washed Out	0.2	3.6	Flat	Parallel	
59	KUALA UNGA (92+480)	PC Girder	Driven Pile	95.0 (6.0)	Washed Out	0.1	3.6	Flat	Parallel	
60	KR. SUBANG (95+500)	RC Girder	Driven Pile	10.0 (7.0)	Abutment Settled	0.4	0.4	Flat/Slope	Parallel	
61	KR. JINAMPRONG (98+150)	Steel Girder	Driven Pile	25.0 (6.0)	Washed Out	0.7	0.8	Flat/Slope	Parallel	

TABLE 4.2 - 2 (2/3) BRIDGE DAMAGE ANALYSIS

(Bridge Length over 10 m)

Serial No. of Bridge	Bridge Name (Location)	Superstructure Type	Substructure Type	Bridge Length (m) (Bridge Width, m)	Damage Condition	Distance from Coast Line	Tsunami Affected Distance (km)	Type of Terrain	Angle to Coast Line	Remarks
62	KR. KLEUE (99+350)	Steel Truss	Driven Pile	45.0 (6.0)	Washed Out	1.0	0.6	Flat/Slope	Parallel	
63	KR. BABAH AWE (100+440)	Steel Truss	Driven Pile	45.0 (6.0)	Washed Out	0.1	0.9	Flat/Slope	Parallel	
65	KR. UJONG (101+810)	RC Girder	Driven Pile	10.0 (7.0)	Washed Out	0.5	0.8	Flat/Slope	Parallel	
70	KR. NO (106+840)	Steel Truss	Driven Pile	61.0 (6.0)	Washed Out	0.4	1.0	Shallow Valley	Diagonal	
71	ALUE KHALIFAH ADAM (107+660)	RC Girder	Driven Pile	16.0 (7.0)	No Damage	0.1	0.2	Slope	Parallel	Elevation = ?
77	KR. GRAKMONG (112+800)	Steel Truss	Driven Pile	46.4 (7.0)	Washed Out	0.6	0.7	Flat/Slope	Diagonal	
81	ALUE LHOK II	RC Girder	Driven Pile	16.0 (6.0)	No Damage	0.3	0.2	Slope	Parallel	Tsunami didn`t reach to the bridge due to small island
83	KUALA LIGAN (119+080)	Steel Truss	Driven Pile	46.2 (6.0)	Washed Out	0.3	3.0	Flat	Diagonal	
85	KR. BABAH NIPAH (122+000)	Steel Truss	Driven Pile	82.2 (6.0)	Washed Out	0.4	4.0	Flat	Diagonal	
87	KUALA BAKONG (125+070)	Steel Truss	Driven Pile	51.0 (7.0)	Washed Out	0.1	3.0	Flat	Parallel	
88	KUALA BAK OE (128+430)	RC Girder	Driven Pile	20.9 (6.0)		0.1	1.8	Flat/Slope	Parallel	
91	KR. BABAH NGOM (132+450)	Steel Truss	Caisson	51.0 (7.0)	Washed Out	0.1	0.7	Flat/Slope	Parallel	
93	KR. LAGEUN (137+950)	Steel Truss	Driven Pile	82.3 (7.0)	Washed Out	0.5	3.0	Valley	Diagonal	
96	KR. BABAH PINTO (143+490)	Steel Truss	Driven Pile	31.0 (6.0)	Washed Out	0.15	0.8	Slope	Parallel	
99	LHOK PEUT (147+920)	RC Slab	Driven Pile	10.0 (6.0)	No Damage	0.5	1.0	Valley	Perpendicular	
100	KR. RIGAIH (149+150)	Steel Truss	Driven Pile	51.0 (7.0)		0.1	1.3	One side slope, One side flat	Parallel	
101	LHOK BUAYA (152+850)	RC Girder	Driven Pile	20.0 (6.0)	Washed Out	0.1	0.7	Flat	Parallel	
102	BATEE TUTONG (153+850)	RC Girder	Driven Pile	15.2 (6.2)	Washed Out	0.1	0.7	Flat/Slope	Parallel	
105	KUALA MEURISI (159+280)	Steel Truss	Driven Pile	50.0 (6.0)	Washed Out	0.1	1.5	Flat	Parallel	
106	KR. SABE (163+450)	Steel Truss	Driven Pile	110.0 (6.0)	Washed Out	1.5	2.5	Flat	Diagonal	
109	KR.KABONG (166+300)	Steel Truss	Caisson	40.0 (7.0)	Washed Out	1.2	3.5	Flat	Parallel	
111	KR. PANGA (175+000)	Steel Truss	Driven Pile	88.1 (7.5)	Washed Out	1.1	3.3	Flat	Parallel	
112	SEUNEUBOK PADANG (182+700)	RC Girder	Driven Pile	15.4 (6.0)	No Damage	1.3	2.6	Flat	Parallel	
113	LEUNG PEUTUA ABAH (184+650)	RC Girder	Driven Pile	15.5 (6.0)	No Damage	1.5	2.2	Flat	Parallel	
115	ALUE PAYA FOFO I (198+240)	RC Girder	Driven Pile	25.8 (6.0)	Washed Out	1.7	3.2	Flat	Parallel	
118	KR. ON (189+550)	Steel Truss	Driven Pile	51.0 (6.0)	No Damage	1.8	3.4	Flat	Parallel	
120	PANDANG KLENG II (190+300)	RC Girder	Driven Pile	12.7 (6.0)	No Damage	1.7	2.7	Flat	Perpendicular	
121	ALUE COT MESJID 192+200)	RC Girder	Driven Pile	21.3 (6.0)	No Damage	1.7	1.8	Flat	Parallel	
123	KR. TEUNOM (192+540)	Steel Truss	Driven Pile	204.0 (6.0)	No Damage	1.6	1.8	Flat	Diagonal	
125	KR. BAKONG (195+200)	PC Girder	Caisson	39.2 (6.0)	No Damage	1.6	1.7	Flat	Parallel	
135	SUAK BIDOK (207+892)	RC Girder	Spread Flooting	15.8 (6.0)	Washed Out	0.15	2.6	Flat	Diagonal	

TABLE 4.2 - 2 (3/3) BRIDGE DAMAGE ANALYSIS

(Bridge Length over 10 m)

Serial No. of Bridge	Bridge Name (Location)	Superstructure Type	Substructure Type	Bridge Length (m) (Bridge Width, m)	Damage Condition	Distance from Coast Line	Tsunami Affected Distance (km)	Type of Terrain	Angle to Coast Line	Remarks
136	LUENG PUTOH PAYONG (209+095)	RC Girder	Driven Pile	10.8 (6.0)	Washed Out	0.15	2.6	Flat	Parallel	
137	LUENG PUTOH PAYONG (210+667)	RC Girder	Driven Pile	10.8 (6.0)	Washed Out	0.15	2.7	Flat	Parallel	
144	LAM BALEK (218+400)	Steel Truss	Driven Pile	42.5 (6.0)	No Damage	0.9	3.2	Flat	Parallel	
145	KR. WOYLA (221+000)	Steel Truss	Driven Pile	183.0 (6.0)	No Damage	0.8	3.1	Flat	Parallel	
	SUAK PANJANG (222+719)	RC Girder	Driven Pile	10.8 (6.0)	No Damage	0.2	1.2	Flat	Parallel	
	SUAK SIRON (228+800)	RC Girder	Spread Flooting	10.8 (6.0)	Washed Out	0.1	0.8	Flat	Parallel	
151	SUAK PANYANG (227+050)	RC Slab	Spread Flooting	10.0 (6.0)	No Damage	0.5	1.5	Flat	Parallel	
152	SUAK SIRON (228+800)	RC Girder	Spread Flooting	15.0 (6.0)	Washed Out	0.4	1.5	Flat	Parallel	
153	SUAK PANTE BREUH (229+320)	RC Girder	Spread Flooting	15.0 (6.0)	No Damage	0.4	1.3	Flat	Parallel	
	SUAK NIBONG (235+570)	RC Girder	Driven Pile	27.6 (6.0)	Washed Out	0.1	1.4	Flat	Parallel	
	SUAK DUO KATA (237+132)	PC Girder	Driven Pile	32.0 (6.0)	Washed Out	0.1	1.4	Flat	Parallel	
	SUAK TIMAH (238+040)			30.0 (6.0)	Washed Out	0.1	1.5	Flat	Parallel	
	SUAK RAYA I (238+853)	RC Girder	Driven Pile	23.6 (6.0)	Washed Out	0.2	1.6	Flat	Parallel	
	SUAK RAYA II (239+100)	RC Girder	Caisson	15.8 (6.0)	Washed Out	0.1	1.6	Flat	Parallel	
	SUAK SIGAPENG (244+280)			40.0 (6.0)	Washed Out	0.9	2.5	Flat	Parallel	
	SUAK RIBEE (245+250)			30.0 (6.0)	Washed Out	1.25	4.0	Flat	Diagonal	
	SUAK UJONG KALAK (246+650)			40.0 (6.0)	Washed Out	0.9	2.5	Flat	Parallel	

TABLE 4.2-3 ROAD DAMAGE CLASSIFICATION

Damage Category	Damaged Condition	Damage Length (km)	% Share to Road Length
Road Submerged	Road section was totally washed out and submerged in the sea.	29.6	12.0
Totally Damaged	Both pavement and shoulders were totally washed out, but a part of roadbed remains.	60.1	24.3
Medium Damage	A part of pavement and shoulders washed out.	94.1	38.1
Minor Damage	A part of shoulder washed out. Pavement was not damaged.	26.0	10.5
No Damage	Tsunami did not reach to a road. No damage.	37.2	15.1
Total		**247.0**	**100.0**

2) General Topography and Road Damage

Banda Aceh – Calang Section

General topography is characterized as very narrow coastal flat plain which is succeeded with steep mountain slopes. The road mostly passes through narrow coastal flat plain. The road crosses the mountain where the coastal flat plain is too narrow for the road to pas through. Most road sections and bridges located close to the coastal line with low road elevation (elevation 0 ~ 2 m) were washed out or totally damaged.

Calang – Meulaboh Section

General topography is characterized as alluvial flat plain which was made by several rivers run from the mountain ranges located at center of Sumatra Island. About 1 to 2 km areas from the coastal line are swampy area with many lagoons, then 2 to 5 km areas from the swampy area are thick forest areas.

The road passes through coastal flat area and most sections were damaged by tsunami. Particularly, the section near Meulaboh (km 200 to km 250) was heavily damaged, because the road was located very close to the costal line (within 100m from the coast).

3) Factors Affecting Road Damage

Factors affecting road damages by tsunami were analized and shown in **Table 4.2-4**.

TABLE 4.2-4 FACTORS AFFECTING ROAD DAMAGES BY TSUNAMI

Factors	Magnitude of Damage		
	Road Submerged	**Totally Damaged**	**Medium Damaged**
1) Distance from the coast to the road	• Mostly less than 400 m. • Maximum distance is 1.2 km when the road is located at shallow.	• Mostly less than 500 m. • Maximum distance is 1.3km when the road is located at shallow valley.	• Road located at flat terrain: distance from the coast is 100m to 4 km with ∝ value of less then 4. • Gentle slope terrain or narrow flat plain succeeded wih slope: distance from the coast is 100 m to 1 km with ∝ value less than 3.
2) Relation between tsunami reached distance and distance from the coast to the road. (∝ : see not below)	• Minimum ∝ is 2.1 at shallow valley. • Maximum ∝ is 29. • Mostly ∝ is over 3 which means tsunami reached 3 times further than the road location from the coast.	• Minimum ∝ is 1.0 at shallow valley • Maximum ∝ is 30. • Mostly ∝ is over 3.	
3) Local topography	• Shallow valley • Narrow flat plane succeeded with steep slope • Wide flat plane, but the road is located near the sea	• Same as "Road submerged"	
4) Angle between coastal line and road alignment	• No relation • Road was damaged with any angle with the coastal line	• Same as "Road submerged"	• Same as "Road submerged "

Note: $\propto = \dfrac{\text{Tsunami Reached Distance}}{\text{Distance from the coast to the road}}$

(When ∝ is 1.0, it means tsunami reached only up to the location of the road. When ∝ is more than 1.0, tsunami reached further than road location by ∝ times)

4.2.3 Bridge Damage Analysis

1) Type of Superstructure

Damage condition by superstructure type for bridges over 10m is summarized in **Table 4.2-5**. All types of superstructure except box culverts were damaged.

TABLE 4.2-5 DAMAGE CONDITION BY TYPE OF SUPERSTRUCTURE

Damage Condition	Type of Superstructure							
	Box Culvert	RC Slab	RC Girder	PC Girder	Steel Girder	Truss	Un-known	Total
1) Washed out	-	1 (11m)	16 (285m)	3 (147m)	1 (25m)	24 (1.477m)	4 (140m)	49 (2.085m)
2) Total Damage	-	-	2 (50m)	-	-	-	-	2 (50m)
3) Minor Damage	-	-	3 (46m)	-	1 (20m)	1 (80m)	-	5 (146m)
4) No Damage	3 (40m)	4 (40m)	8 (119m)	2 (61m)	-	6 (577m)	-	23 (837m)
5) No Damage (Tsunami didn't reach to a bridge)	-	-	2 (38m)	-	-	-	-	2 (38m)
Total	3 (40m)	5 (51m)	31 (538m)	5 (208m)	2 (45m)	31 (2,134m)	4 (140m)	81 (3,156m)

2) Distance from the Coast Line to the Bridge Site

Distance from the coast line to the bridge site has high impact on the bridge damage as shown in **Table 4.2-6**.

Distance from Coastal Line to Bridge (km)	No. of Bridge by Damage Condition				
	Washed out	Total Damage	Minor Damage	No Damage	Total
0.05	3 (6%)	-	-	3 (Note)	6
0.10	14 (29%)	1	-	-	15
0.15	6 (12%)	-	-	-	6
0.20 - 0.30	3 (6%)	-	-	1	4
0.30 - 0.40	2 (4%)	1	1	-	4
0.40 - 0.50	6 (12%)	-	-	1	7
0.50 - 0.60	3 (6%)	-	1	2	6
0.60 - 0.70	2 (4%)	-	-	-	2
0.70 - 0.80	-	-	1	-	1
0.80 - 0.90	-	-	-	1	1
0.90 - 1.00	3(6%)	-	-	1	4
1.00 - 2.00	7 (14%)	-	2	8	17
2.00 - 3.00	-	-	-	2	2
3.00 - 4.00	-	-	-	3	3
4.00 - 5.00	-	-	-	1	1
over 5.00	-	-	-	-	-
Total	**49 (60%)**	**2**	**5**	**23**	**79**

Note: 2 out 3 are box culvert

Among washed out bridges, 80% were located within 700 meters from the coastal line, and furthest bridge was at 1.7km from the coastal line.

3) Tsunami Reached Distance and Bridge Distance from the Coast (∝ value)

Relation between bridge damage condition and ∝ value is shown in **Table 4.2-7**.

TABLE 4.2-7 RELATION BETWEEN BRIDGE DAMAGE AND ∝ VALUE

∝ Value	No. of Bridges by Damage Condition				
	Washed Out	Total Damage	Minor Damage	No Damage	Total
1.0 – 1.5	2	-	1	8	11
1.5 – 2.0	6	-	1	4	11
2.0 – 3.0	9	1	1	3	14
3.0 – 4.0	4	-	1	5	10
4.0 – 5.0	1	1	1	-	3
5.0 – 10.0	7	-	-	1	8
10.0 - 15.0	8	-	-	1 (Box)	9
15.0 – 20.0	9	-	-	0	9
over 20.0	3	-	-	1 (Box)	4
Total	**49**	**2**	**5**	**23**	**79**

As a general tendency, when ∝ value is high, bridges are washed out, although two bridges were washed out even ∝ value is 1.5 or less.

Chapter 5

REHABILITATION AND RECONSTRUCTION PLAN AND PROGRESS

5.1 OVERALL PLAN OF REHABILITATION AND RECONSTRUCTION

Soon after the Earthquake / Tsunami Disaster, the State Ministry of National Development Planning (BAPPENAS) formulated "the General Frameworks for Rehabilitation and Reconstruction Plan of Aceh and North Sumatera" in January 2005. Outline of the said plan is set force hereunder.

5.1.1 Phases in Management Strategy

The following here steps were planned:

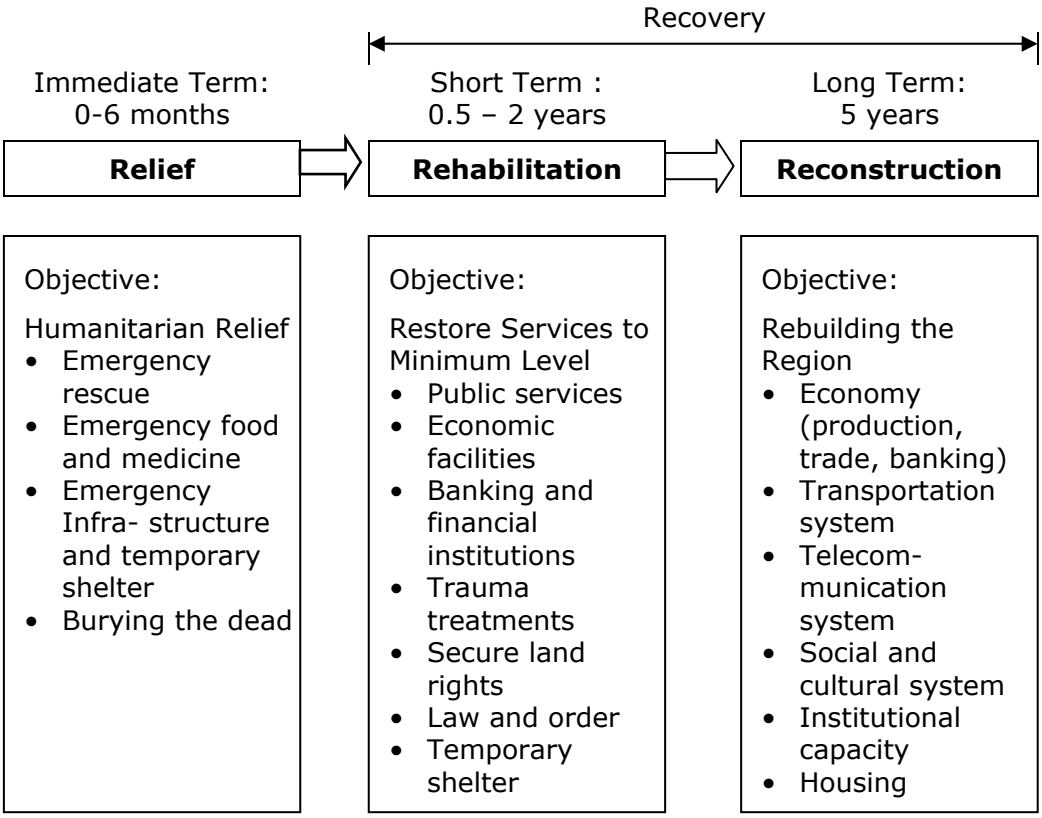

5.1.2 Core Principles

- People centered and participatory (empower people of Aceh)
- Comprehensive (based on spatial plan)
- Coordinated (sectors and regions)
- Clean strategy with different phases
- Rebuilding institutions (capacity building)
- Fiscal transparency and effective monitoring

5.1.3 Themes and Challenges

1) Themes

- Restoring People's Lives and Livelihood
- Restoring the Economy
- Restoring Infrastructure
- Restoring Government and Civic Institutions

2) Challenges

- Quick action versus broad participation
- Fostering local implementation
- Bringing worldwide support for the people of Aceh into the budgetary process
- Building reconciliation

5.1.4 Strategies

1) Restoring Lives and Livelihoods

- Begin labor intensive public works (clean-up) quickly.
- Provide the opportunity for families to rebuild their own homes (with design standards and building codes)
- Support families and communities where displaced people have taken refuge
- Provide transparent compensation – Compensation strategies (from budget resources) needed careful consideration and design, but past experience shows that this is the area of greatest difficulty (legal disputes)
- Focus on land offices and dispute resolution procedures (including institution and staffing)

2) Restoring the Economy

- Emphasize labor intensive infrastructure investment and purchase and hire locally
- Recapitalize household enterprises with grants rather than loans
- Move quickly to reestablish banking services (including proof of identity procedures)
- Minimize local and international trade restrictions to minimize price hikes
- Reestablish retail/wholesale markets including information centers

3) Restoring Infrastructure

- Rebuild roads and bridges
  - Strategic roads and bridges need to be rehabilitated quickly
  - During reconstruction some roads will need to be realigned
- Rebuild ports (air and sea)
  - Air port damage limited
  - Restore the function of strategic ports
- Repair electric and telecommunications infrastructure
  - Damage is limited, Telcom and PLN are preparing implementation plans

- Restore clean water
  - Temporary measures need to be taken
  - Wells desalinated
  - Systems reestablished

4) Restoring Government and Civic Institutions

- Rebuild local administrations (including the police) and restore functional responsibility as quickly as possible.
- Strengthen administrative arrangements and ensure transparency (governance)
- Establish systems to ensure delivery to public services to the vulnerable (orphans, handicapped, widows)
- Support and facilitate the redesigning of cities and places of economic activity (including with private partners)

5.1.5 Rehabilitation and Reconstruction Plan

The plan structure is as follows:

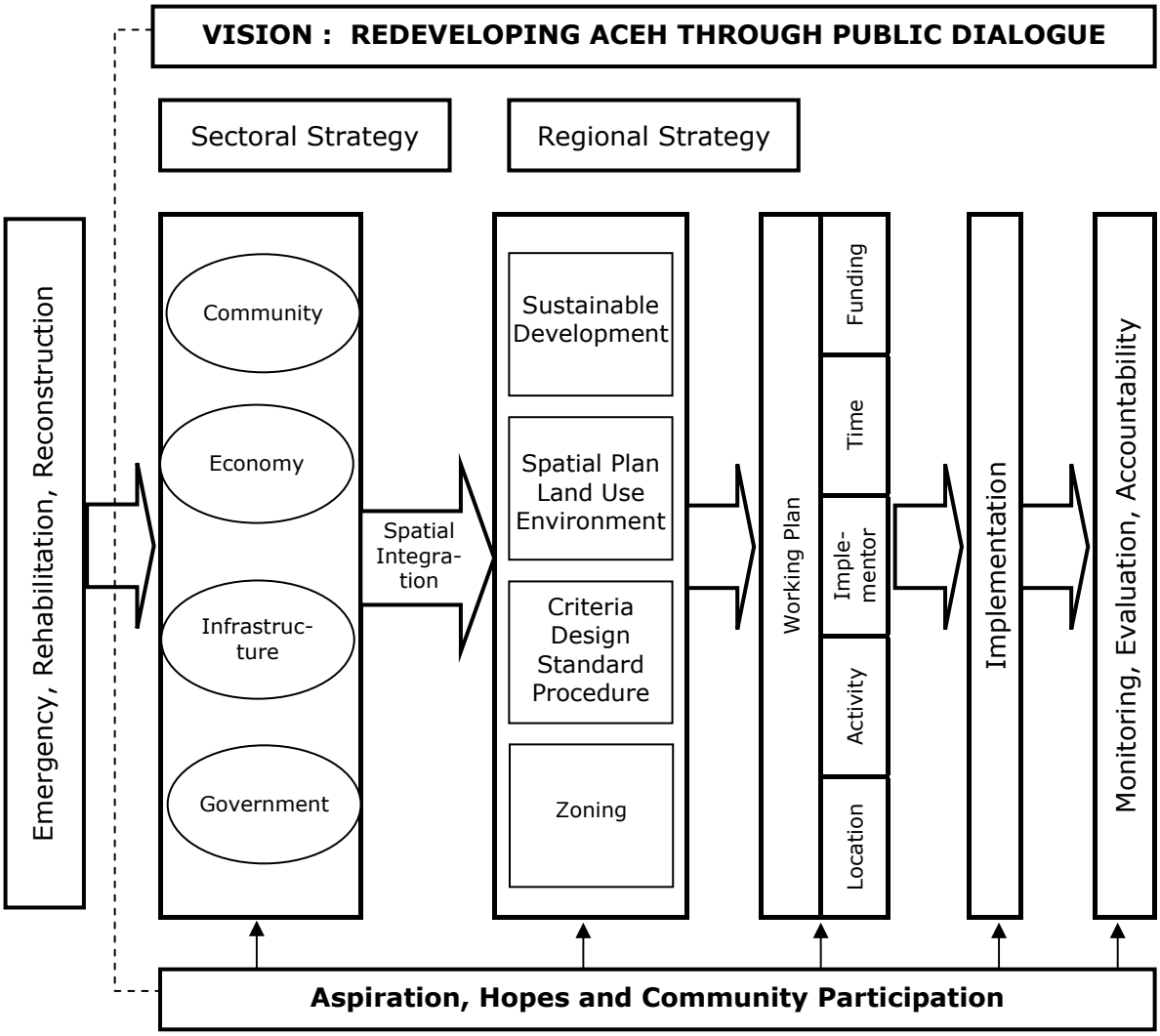

5.1.6 Financing and Fiduciary Arrangements

Financing and fiduciary arrangements are as follows:

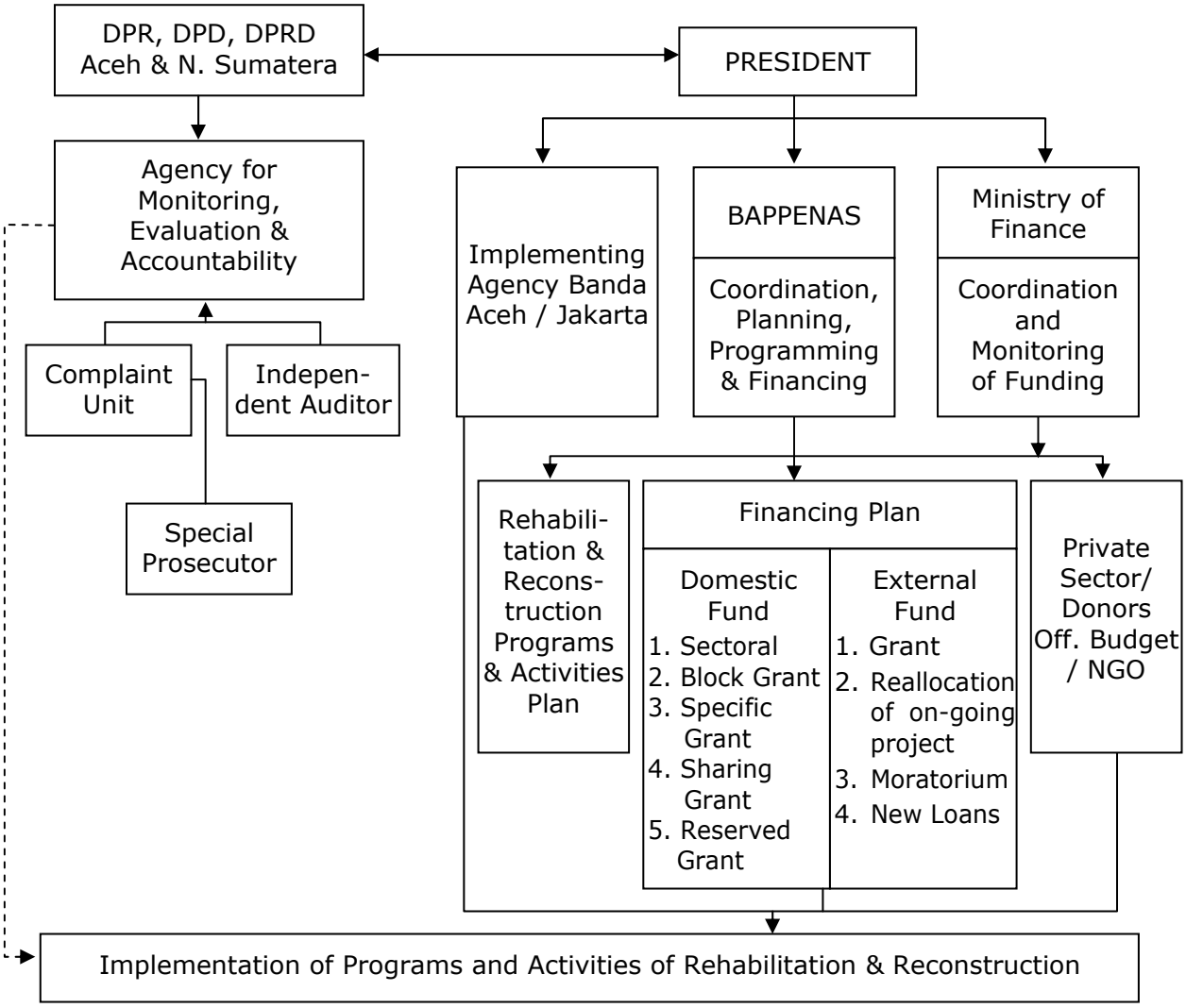

5.1.7 Implementing Structure of Rehabilitation and Reconstruction Plan

Structure and working scheme of rehabilitation and reconstruction plan is as follows:

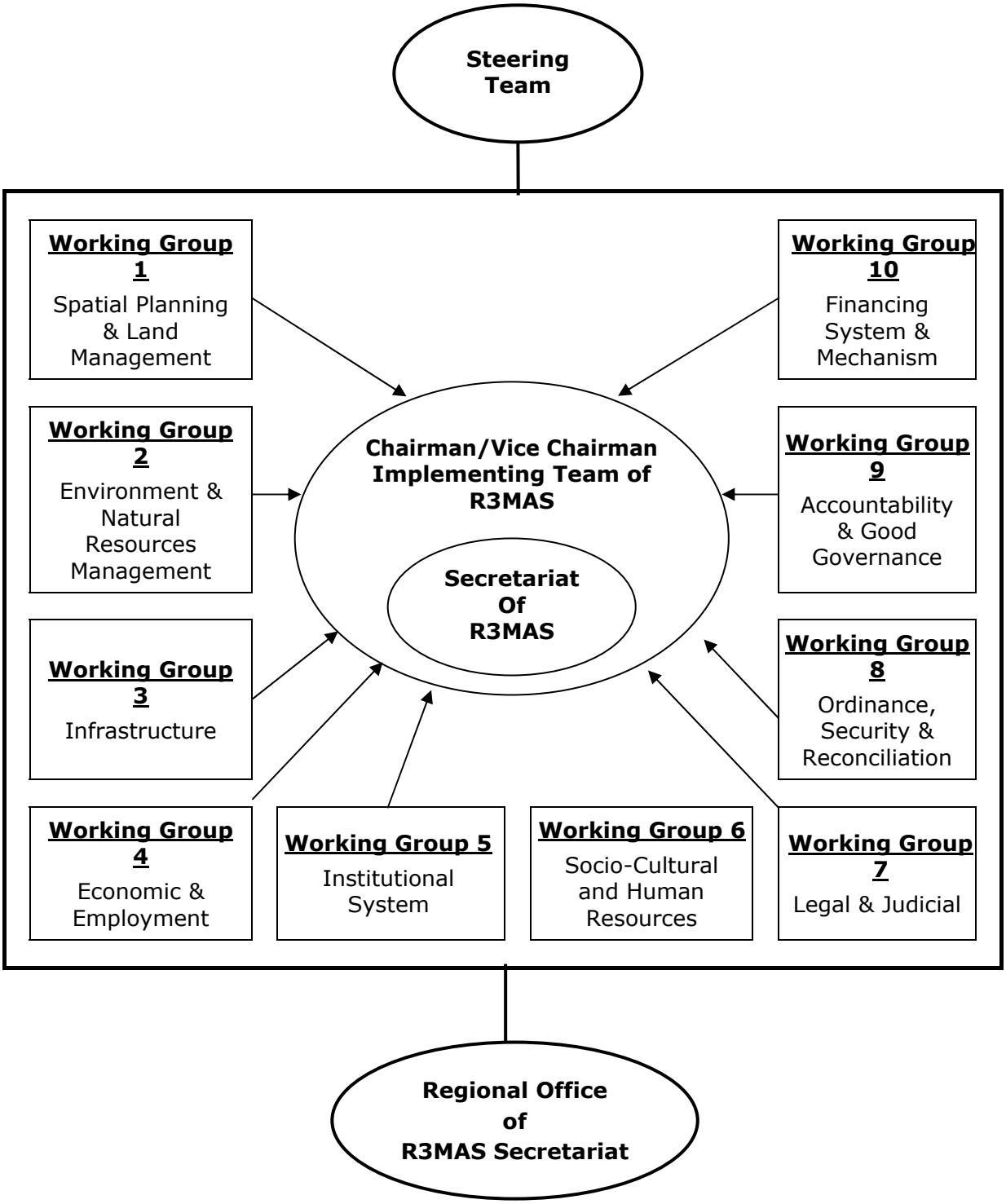

Note: R3MAS – Rencana Rehabilitasi & Rekonstruksi Masyarakat Aceh & Sumut

5.2 Implementation Organization

5.2.1 Before April 16, 2005

The implementation structure before April 16, 2005 was as shown in Section 5.1.7 of this Chapter. BAPPENAS Minister announced on February 1, 2005 the composition of the Steering Team and the Implementing Team as shown below.

Steering Team

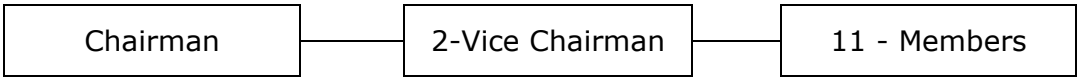

Implementing Team

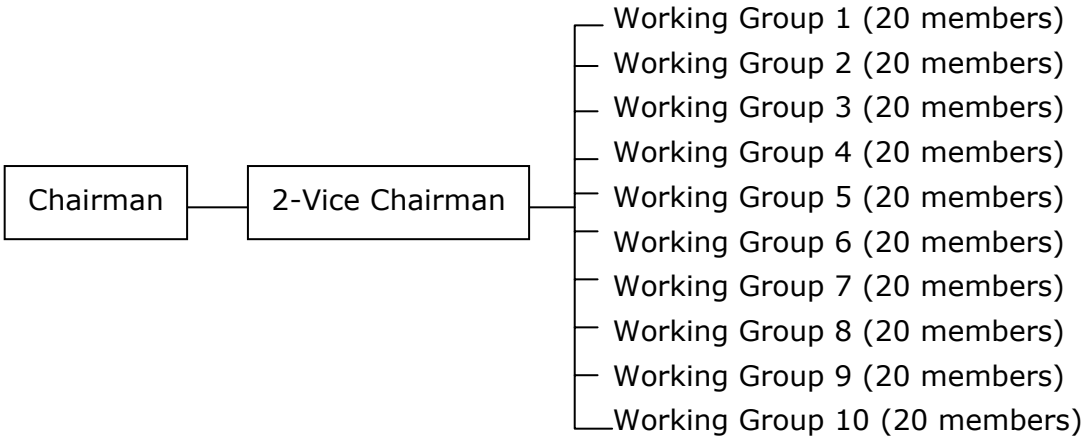

5.2.2 After April 16, 2005

New body was created exclusively for Aceh and Nias Rehabilitation and Reconstruction by the President on April 16, 2005. New body is call as "the Executive Agency for the Rehabilitation and Reconstruction of Aceh and Nias" (BRR, NAD-NIAS) Badan Rehabilitasi dan Rekonstruksi) and composed of the following:

Executive Board	-	11 members headed by Mr. Kuntovo Mangkusobroto
Advisory Board	-	19 members headed by Mr. Widodo As
Supervisory Board	-	9 members headed by Mr. Abdulah Ali

Agency's missions and roles are as follows:

Agency Mission Statement:

To restore livelihood and strengthen communities in Aceh and Nias by designing and implementing a coordinated, community-driven reconstruction and development program with the highest professional standards.

Mission

1. Coordinated reconstruction and development program

   - Adopt a holistic, strategic approach to maximize overall reconstruction and development impact (e.g. objective decision beyond each ministry's interest)
   - Fulfill short-term rehabilitation and reconstruction needs as well as provide platform for long-term development (e.g. building self-sustaining capabilities)
   - Promote optimal allocation or resources by constant focus on highest priority outcomes (e.g. ensure funds are available for urgent/important initiatives)

2. Community-driven approach

   - Partnership between national government and local government institutions
   - Ongoing grass-roots participation of Acehnese and Nianese people in the development and monitoring of the reconstruction program
   - Respect for local values and beliefs (e.g. prioritizing the reconstruction of important religious buildings)

3. Highest professional standards

   - Complete transparency in operations to ensure full accountability for resources (e.g. transparency of project need and contributions, funding flow, reconstruction priorities, execution progress, monitoring the Agency's internal performance)
   - Ensure fast and efficient decision-making process
   - Capitalize on lessons from other post-disaster reconstruction programs

Roles

BRR has been established as a coordinating agency to ensure transparency, accountability, and speed in the reconstruction of Aceh and Nias. It has not been designed to directly manage projects currently being carried out by government agencies, donor institutions, non-governmental organizations, and the private sector. The Agency's core role is to match donor funds with specific community needs in Aceh and Nias through a process that is rigorous, sensitive to local concerns and priorities, and well-monitored.

As part of its mandate for transparency, the Agency will track and make publicly available the project demands submitted by affected regions, the use of donor funding, and the status of project execution.

BRR will also determine criteria for prioritizing projects and optimizing the use of funds. The Agency will actively compile input from government agencies and local communities to determine priorities for reconstruction and rehabilitation.

The Agency will expedite the disbursement of funds to priority areas and resolve logistics bottlenecks and other project delays. In matching donors to projects, the Agency will verify that the reconstruction activities are

aligned with the Government's Master Plan for Rehabilitation and Reconstruction.

BRR will make use of a team of experts and advisers with extensive knowledge and experience in disaster recovery programs. Each employee and contractor will be held to the highest standards of personal integrity and professionalism. Local government agencies in Aceh and Nias as well as line ministries will continue to play key roles in project development and implementation.

In order to ensure continuity in the long-term reconstruction of the tsunami-affected areas, BRR will place an immediate emphasis on capacity-building so that local communities can continue the development program after the four-year mandate of the Agency is complete.

5.3 REHABILITATION AND RECONSTRUCTION PLAN OF THE PROJECT ROAD

5.3.1 Overall Plan

Overall plan for rehabilitation and reconstruction of the Project Road was established as shown in **Table 5.3-1**.

TABLE 5.3-1 OVERALL REHABILITATION AND RECONSTRUCTION PLAN

Phase	Target Date for Completion	Objectives	Major Works	Implementing Agency
1) Urgent Restoration	By March 26, 2005	• To provide basic transport access to affected areas in order to support relief operation • To make the road possible for special vehicles such as trucks and 4WD vehicles	• To provide detour roads for washed-out sections • Urgent repair of damaged sections • To construct bailey bridges, timber bridges, pipe culverts at river crossings (some locations by portion)	Military
2) Rehabilitation (Urgent Recovery)	By the end of December 2006	• To make the road passable for all types of vehicles	• Rehabilitation to semi-permanent level of road • Paved road surface • Replace with semi-permanent bridges	Ministry of Public Works
3) Reconstruction	By the end of December 2009	• To completely improve or reconstruct the road to high level of standards for sustainable regional economic recovery and development	• To re-build a road with ASIAN Highway Standards	Ministry of Public Works

5.3.2 Implementation Schedule

As of June 2005, the more concrete implementation schedule and sources of funds were determined and shown in **Table 5.3-2**.

TABLE 5.3-2 IMPLEMENTATION SCHEDULE OF REHABILITATION AND RECONSTRUCTION OF WEST COAS ROAD

Phase	Section	Estimated Cost (Million US$)	Fund Source	Implementation Schedule				
				2005	2006	2007	2008	2009
1) Urgent Restoration	Banda Aceh Meulaboh L = 247km	-	Local Fund	March 26 Maintenance				
2) Rehabilitation (Urgent Recovery)	Calang – Meulaboh (Utilize Village or Kabupater Road) L = 122 km	44.3 (or 4,700 Million Yen) (including procurement of equipment/ plants/material)	Japan's Non-Project Grant Aid Fund	Aug	Feb.			
3) Reconstruction	Phase I : 60km Section from Banda Aceh (Net L = 8.6km)	10 ~ 15	USAID Fund	Sep.	May (9 months) (Design-build)			
	Phase II : Remaining Section up to Meulaboh L = 230 km	200		Aug D/D (6 months)	Jan. Apr.	(Construction) (3 years)		Mar.

5.4 OUTLINE OF COMPLETED URGENT RESTORATION

5.4.1 Urgent Restoration Works

Urgent restoration works by the Military were completed on March 26, 2005. Major works implemented were as follows:

For Washed-out Road Sections

- Construction of detour roads with gravel/earth surface at washed-out bridge locations.
- Construction of re-aligned new road with gravel/earth surface by opening up a forest to replace a coastal section which was washed out or totally damaged.
- Existing Village (or Kabupaten) Road (pavement width = 3.5m) was selected as a detour road from km. 220 to Meulaboh.

For Damaged Road Sections

- Repair of washed out embankment and shoulders, construction of earth ditches, gravelling of pavement washed out sections, etc., were undertaken.

For Washed-out Bridges

- Temporary bailey bridges and timber bridges were constructed. Due to limited time and materials available, temporary bridge length is mostly shorter than the width of the river, therefore, causeway type of bridge approaches were constructed.
- River crossing by a pontoon is adopted for a wide river.
- At some locations, pipe culverts were installed in stead of constructing a bridge.

The alignment used for the urgent restoration works is shown in **Figure 5.4-1.**

5.4.2 Implementation of Urgent Restoration Works

Urgent restoration works were implemented by the Military with the support of contractors. Total stretch was divided into eight sections and Engineering (Zeni) Bridges, Marine, Infantry Brigade were mobilized as shown in **Table 5.4-1**.

TABLE 5.4-1 MOBILIZED MILITARY TEAMS

Section	From (km) - To (km)	Section Length (km)	Mobilized Military Team	Supported Contractor
1	14+160 - 46+480	32.32	Engineering Bridge No. 13	Pt. Waskita Karya
2	46+480 - 86+150	39.67	Engineering Bridge No. 10	
3	86+150 - 95+500	9.35	Engineering Bridge No. 3	
4	95+500 - 106+840	11.34	Engineering Bridge No. 2	
5	106+840 - 122+000	15.16	Engineering Bridge No. 4	Pt. Adhi Karya
6	122+000 - 137+950	15.95	Engineering Bridge No. 5	
7	137+950 - 175+000	37.05	Marine	
8	175+000 - 274+000	99.0	Infantry Brigade No.I and Engineering Bridge No. II	Pt. Wijaya Karya
	Total	259.84		

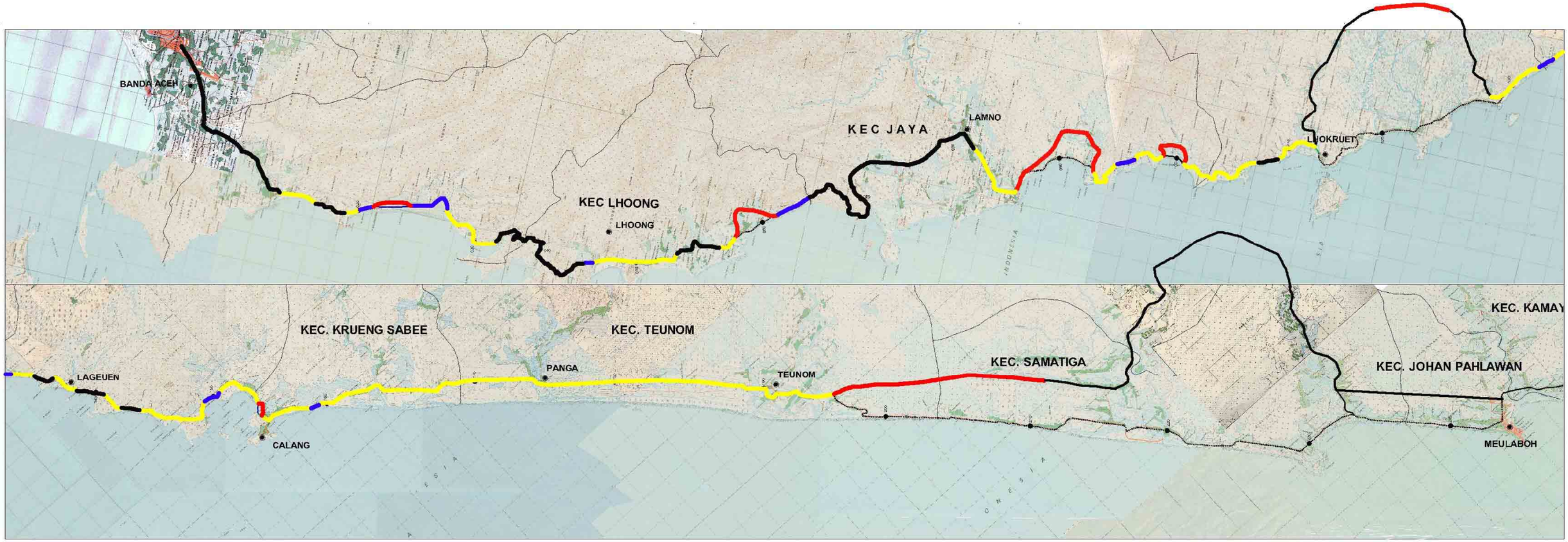

LEGEND:

Re-aligned Section : 33.5 km

Restored Section : 11.9 km

Repaired Section : 83.7 km

Figure 5.4-1 URGENT RESTORATION ROUTE BY MILITARY

5.4.3 Mobilized Equipment

Equipment shown in **Table 5.4-2** was mobilized.

TABLE 5.4-2 MOBILIZED EQUIPMENT

Equipment	Section								Total	Provided By				
	1	2	3	4	5	6	7	8		Mili-tary	Prov. Gov. 1)	Con-tractor 2)	Other Country 3)	Others 4)
Backhoe	14	16	5	3	7	5	16	17	83	11	4	34	11	20
Buldozer	10	6	6	5	8	7	4	12	58	8	5	24	19	2
Dump Truck	26	9	14	10	16	12	31	86	204	24	20	138	5	17
Loader	5	1	2	2	3	2	6	6	27	11	3	6	2	5
Roller	4	1	3	1	3	3	-	3	18	5	2	11	-	-
Grader	3	1	2	2	1	2	1	4	16	6	1	9	-	-
Backhoe Loader	-	1	1	-	-	-	-	-	2	-	-	-	2	-
Crane	2	-	-	-	-	-	-	1	3	-	-	-	-	-
Trailer	2	-	-	-	-	-	1	1	4	3	-	2	-	-
Total	66	35	33	23	38	31	59	130	415	71	35	226	39	44

Note:
1) Aceh Province for Section 2, West Java Province for Section 3 Banten Province for Section 3, South Sumatera Province for Section 4, and East Java Province for Sections 5 & 6.
2) Pt. Waskita Kayra for Sections 1 to 4, P. Adhi Karya for Sections 5 to 7 ad Pt. Wijaya Karya for Section 8.
3) Yemen for Section 1, Kuwait for Sections 1 to 6 and
4) Indonesia Red Cross fro Section 2, and others

Chapter 6

PRELIMINARY STUDY OF RECONSTRUCTION PLAN OF THE PROJECT ROAD

6.1 PROPOSED PLAN BY THE JICA STUDY TEAM

6.1.1 Introduction

The Memorandum of Understanding (MOU) between the Government of Indonesia and the Government of the United States of America regarding the reconstruction of the West Coast Road from Banda Aceh to Meulaboh was signed on May 8, 2005. It was officially decided that the Government of USA through USAID provides the technical and financial assistance to the Government of Indonesia for the reconstruction of the West Coast Road.

Prior to the said official decision, the JICA Study Team started the preliminary study of the reconstruction plan of the West Coast Road for the purposes of the following:

- To provide technical assistance for the planning of reconstruction of the West Coast Road to the Ministry of Public Works,
- To provide useful information obtained through the preliminary study to the Ministry of Public Works.

6.1.2 Planning Concepts

1) Objectives of the Project

- To improve mobility as well as to provide reliable means of transportation in the region.
- To accelerate economic and livelihood recovery and obtain sustainable development of the region.

2) Planning Concepts

<u>Route Selection</u>

- It was assumed that most evacuated people from tsunami disaster would come back to the original place where they were residing before tsunami.
- The original route before tsunami will be utilized as much as possible with necessary protections.
- For the washed-out road sections, new route will be selected away from the coast line, thus a buffer zone can be provided between the road and the sea. Trees are recommended to be planted in a buffer zone to reduce tsunami force.

- The route will connect original community areas each other as much as possible to recover tsunami affected people's livelihood and socially economic activities.
- Road right-of-way acquisition should be limited to required minimum.
- Natural environment should be protected as much as possible. The route which requires cutting of forest trees, high cut sections, river contamination, road structure which induce erosion, etc. should be avoided as much as possible.
- Relocation of houses should be minimized.
- A route which minimizes construction cost should be selected.

Design Standards

- To improve mobility for economic recovery and development, ASIAN HIGHWAY STANDARDS, Class II (2-lane) was selected.
- Major design standards are as follows:

ASIAN HIGHWAY DESIGN STANDARDS : CLASS II (2-Lane)

		Terrain Classification			
		Level	**Rolling**	**Moun-tainous**	**Steep**
Design Speed (km/hr)		80	60	50	40
Width (m)	Right-of-way	30			
	Lane	3.50			
	Shoulder	2.00 ~ 2.50		1.00 ~ 2.00	
Minimum Horizontal Curve (m)		210	115	80	50
Pavement Slope (%)		2.0			
Shoulder Slope (%)		3 – 6			
Maximum Superelevation (%)		10			
Maximum Vertical Grade (%)		4	5	6	7
Structure Loading (Minimum)		HS20 - 44			

6.1.3 Proposed Route for Reconstruction

Proposed route for reconstruction is shown in **Figure 6.1-1.**

6.1.4 Typical Road Cross Sections

Typical road cross sections were prepared for the sections which utilize existing road and sections for re-aligned new road as follows:

Sections which Utilize Existing Road

Type E-a : Widening of existing road (Flat Section)
Type E-b : Widening of existing road at the section with one side facing the seas and the other side facing the cliff
Type E-c : Widening of existing road at the soft ground section
Type E-d : Widening of existing road at the mountainous section

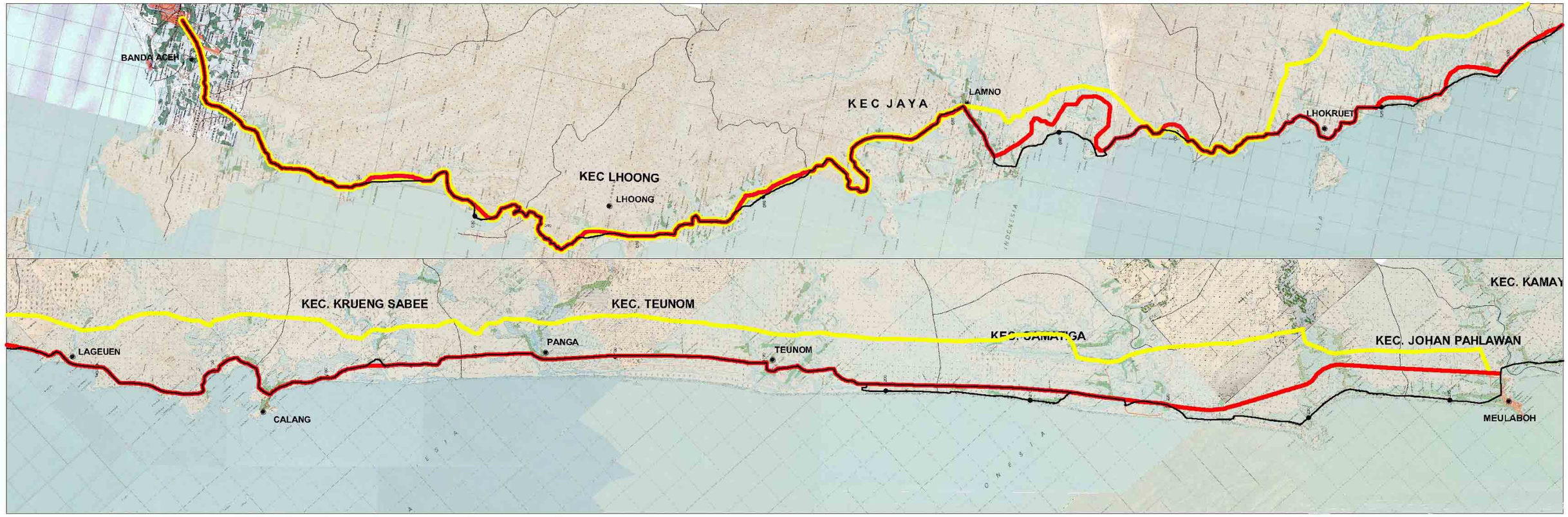

LEGEND:

Reconstruction Route (Proposed by this study): 250 km

Reconstruction Route (Proposed by USAID) : 235 km

Original West Coast Route : 247 km

Figure 6.1-1 RECONSTRUCTION ROUTE

Sections which Re-aligned from the Existing Road (New Road)

Type R-a : New road at flat section
Type R-b : New road near the sea
Type R-c : New road at the soft ground section
Type R-d : New road at the forest section
Type R-e : New road at the mountainous section
Type R-f : New road at cut section

Typical cross sections are shown in **Figure 6.1-2**.

Road section length of each cross section type is summarized in **Table 6.1-1.**

TABLE 6.1-1 ROAD SECTION LENGTH BY CROSS SECTION TYPE

Cross Section Type		Length (km)	Share (%)
Section which utilize Existing Road	Type E-a	68.4	27.3
	Type E-b	12.8	5.1
	Type E-c	57.7	23.1
	Type E-d	30.2	12.1
	Sub-total	169.1	67.6
Sections which Re-aligned from the Existing Road (New Road)	Type R-a	5.9	2.4
	Type R-b	5.0	2.0
	Type R-c	48.7	19.5
	Type R-d	4.0	1.6
	Type R-e	2.2	0.9
	Type R-f	1.1	0.4
	Sub-total	66.9	26.8
Now work (totally utilize existing section)		14.0	5.6
TOTAL		**250.0**	**100.0**

6.1.5 Reconstruction of Bridges

Following bridges were planned to be reconstructed:

- Washed-out bridges.
- Bridges which were not damaged by tsunami, but bridges carriageway width is less than 7m.
- Bridges which were not damaged but bridge approach was washed out (bridge length was not appropriate)
- Bridges required along the re-aligned route.

Bridges with a bridge length over 10m along the Project Road are listed in **Table 6.1-2**.

A total of 67 bridges with a total bridge length of 3,631m were planned to be reconstructed.

Type E-a: Widening of existing road (Flat Section)

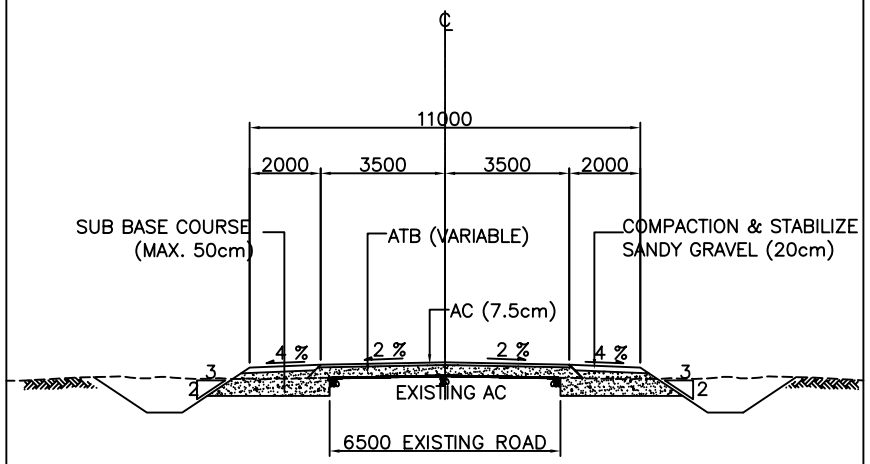

Type E-b: Widening of existing road at the section with one side facing the sea and the other side facing the cliff

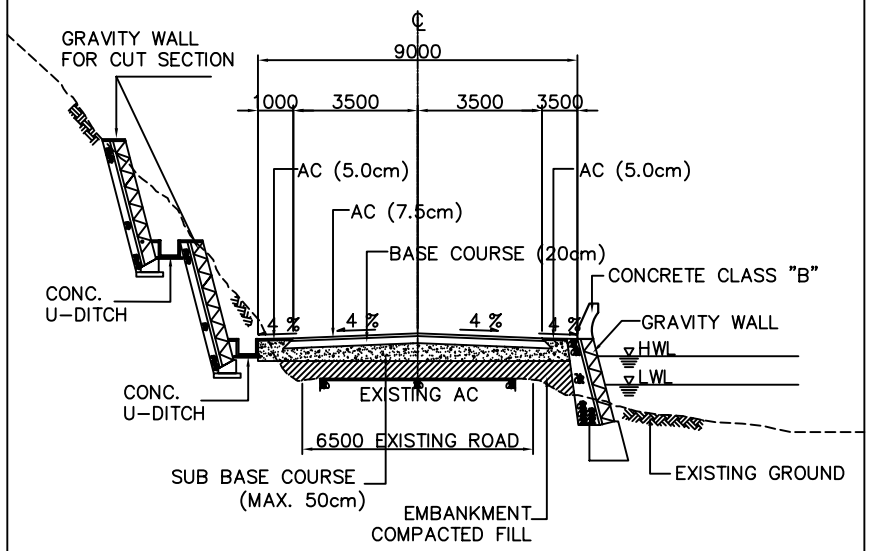

Figure 6.1-2 (1/5) TYPICAL CROSS SECTIONS

Type E-c: Widening of existing road at the soft ground section

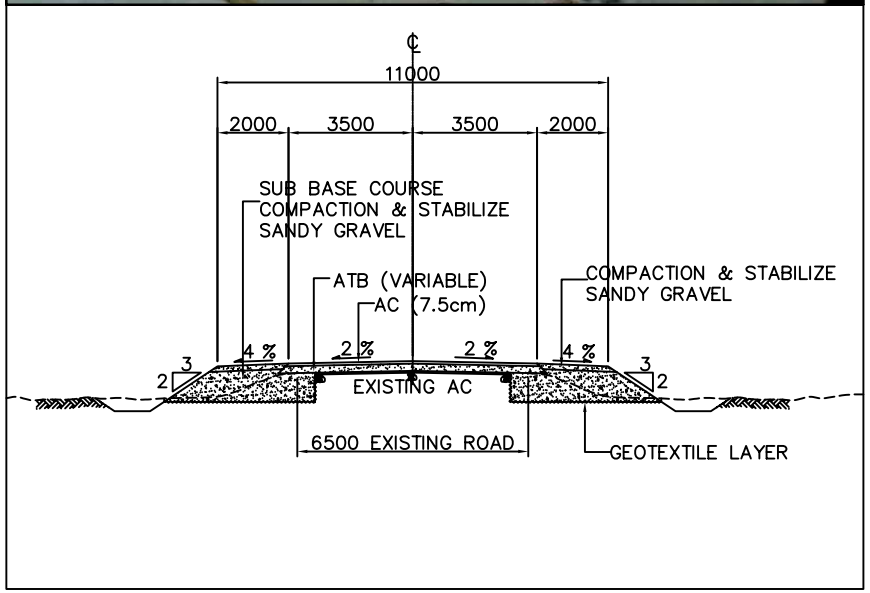

Type E-d: Widening of existing road at the mountainous section

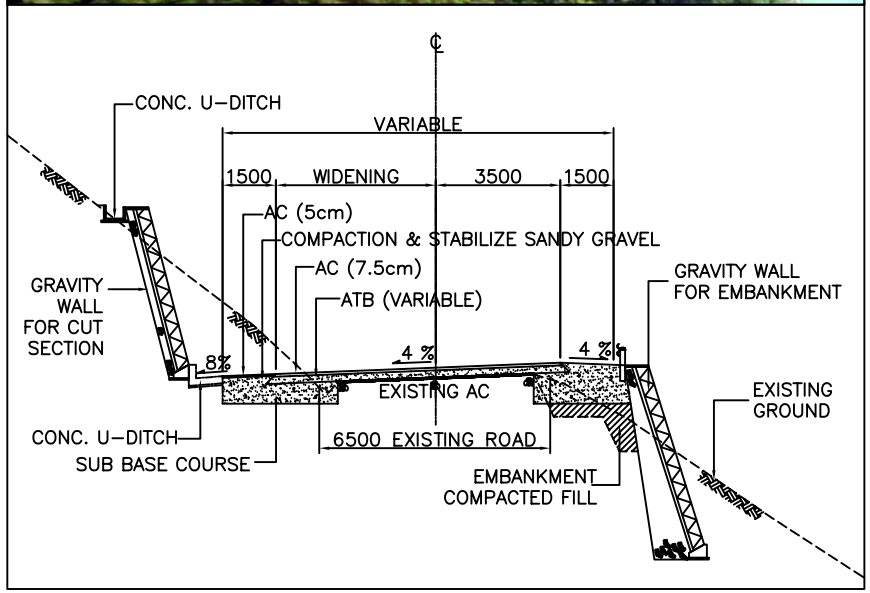

Figure 6.1-2 (2/5) TYPICAL CROSS SECTIONS

Type R-a: New road at flat section

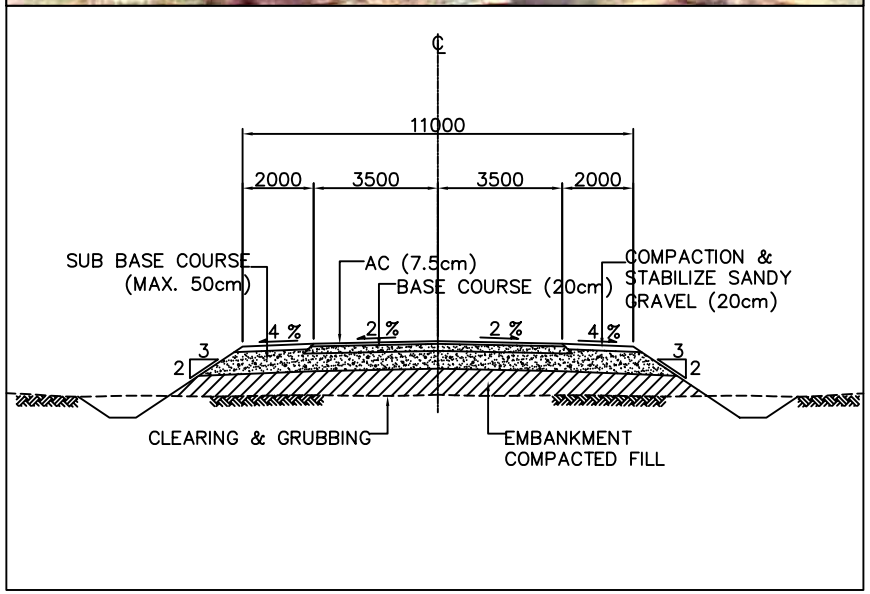

Type R-b: New road at the section with one side facing the sea and the other side facing the cliff

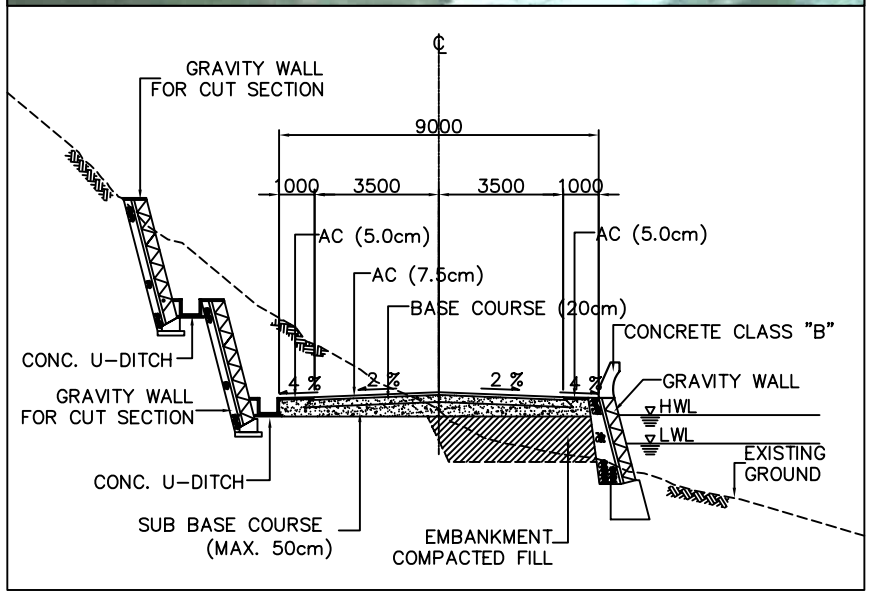

Figure 6.1-2 (3/5) TYPICAL CROSS SECTIONS

Type R-c: New road at the soft ground section

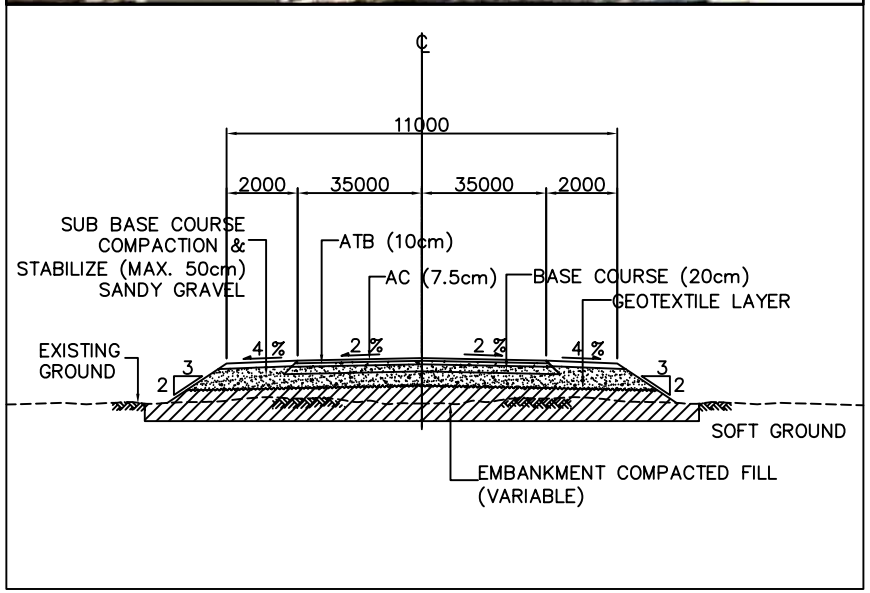

Type R-d: New road at the forest section

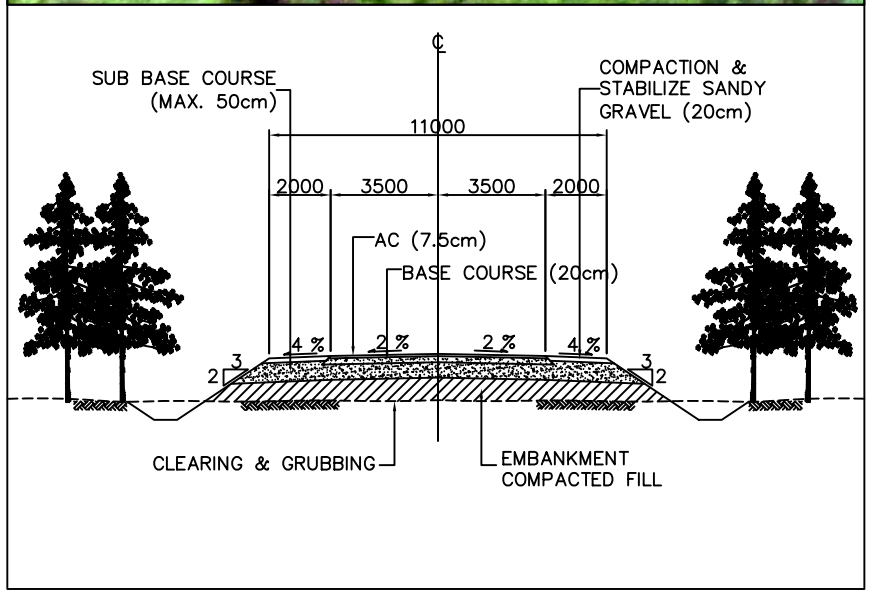

Figure 6.1-2 (4/5) TYPICAL CROSS SECTIONS

Type R-e: New road at the mountainous section

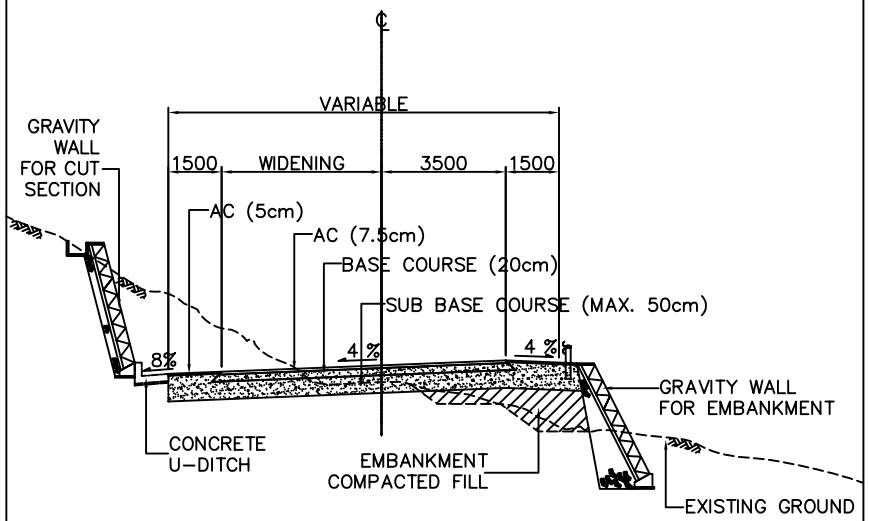

Type R-f: New road at cut section

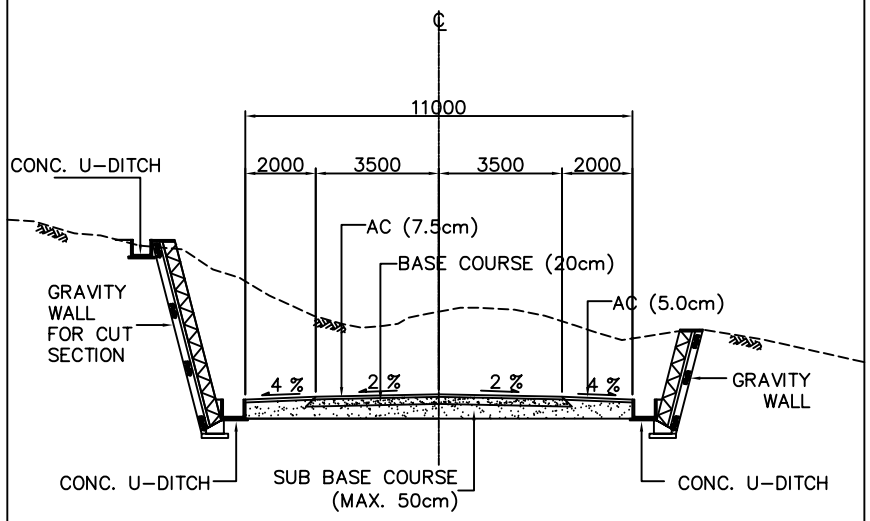

Figure 6.1-2 (5/5) TYPICAL CROSS SECTIONS

The West Coast Area is large scale earthquake prone area. Bridges must be carefully designed to resist seismic forces. Followings are proposed:

- Bridges are provided with retrofittings to prevent from falling down.
- Substructure and foundation are the location of seismic force concentration. Integrated type of bridge (superstructure and substructure / foundation are integrated as a structural system) should be selected as much as possible.
- Flexible type of foundation should be selected which allow to release seismic force.

6.1.6 Roughly Estimated Reconstruction Cost

Reconstruction cost was roughly estimated at 18,811 Million Yen (or 1,618 Billion Rp) as shown in **Table 6.1-3**.

6.1.7 Contract Packaging

Considering the magnitude of the reconstruction cost, accessibility to a jetty and contractor's base-camp location (Banda Aceh, Calang and Meulaboh), four contract packages were proposed as follows:

Contract Package	From – To (km – Km)	Length (km)
1	Banda Aceh – Lamno (Km. 0+000 – Km. 80+000)	80.0 km (Net 66.0 km)
2	Lamno – Calang (Km. 80+000 – Km. 155+000)	75.0 km
3	Calang - Teunom (Km. 155+000 – Km. 200+000)	45.0 km
4	Teunom – Meulaboh (Km. 200+000 – Km. 250+000)	50.0 km

6.1.8 Proposed Implementation Schedule

Completion of reconstruction was targeted to be by the middle of 2009. The detailed design planned to start from the last quarter of 2005.

TABLE 6.1-4 PROPOSED IMPLEMENTATION SCHEDULE

	Year				
	2005	2006	2007	2008	2009
Detailed Design / EIA					
ROW Acquisition/Resettlement					
Selection of Contractors					
Construction					

Figure 6.1-2 BRIDGES FOR RECONSTRUCTION

Bridge No.	Bridge Name	Location	Original Bridge				Urgent Restoration Stage		Reconstruction Stage			Remarks
			Length	Width	Type	Tsunami Damage	Type	Length	Length	Spans	Type	
1	KR. RABA	14+160	68	9.0	Steel Truss	Washed-out	Bailey Bridge	68	90	3x30	PCDG	
2	KR. BALEE	16+930	17	9.0	Box Culvert	No damage	RCBC	6	15	1x15	RCBC	
3	KR. RITING	19+600	25	6.0	RC Girder	Railing, reverbank damaged	None	25	30	1x30	PCDG	
4	KR. LEUPUNG	20+900	13	7.0	RC Girder	Approach road washed-out	Detour	13	20	20	PCDG	
5	GANTANG PIRAK	22+550	25	9.0	RC Girder	Approach road washed-out	Detour	Pipe culvert	30	1x30	PCDG	
6	KR. MESJID	24+040	20	6.0	PC Girder	Washed-out	Bailey Bridge	20	40	1x40	PCDG	
7	KR. LHOK KACA	25+980	80	9.0	Steel Truss	Washed-out	Bailey Bridge	40	90	3x30	PCDG	
8	KR. PEULOT	27+840	40	9.0	RC Girder	Washed-out	Bailey Bridge	24	50	2x25	PCDG	
9	KR. KEUNAWEUT	33+920	22	9.0	RC Girder	No Damage	-	-	-	-	-	
10	LAM ILIE	46+480	35	7.0	Steel Truss	Washed-out	Detour	Pipe culvert	40	2x20	PCDG	
11	KR. KALA	46+660	40	7.0	Steel Truss	Washed-out	Detour	Pipe culvert	40	2x20	PCDG	
12	KR. MOP	49+170	11	7.0	RC Slab	Washed-out	RCBC	6	15	1x15	RCDG	
13	LUENG IE	50+810	18	9.0	RC Girder	Railing damaged	None	-	-	-	-	
14	LAM ARA	52+450	18	9.0	RC Girder	Railing damaged	None	-	-	-	-	
15	KR. LHONG I	54+570	80	9.0	Steel Truss	No Damage	-	-	-	-	-	
16	KR. CUNIEM	57+050	20	7.0	Steel Girder	Washed-out	Bailey Bridge	20	40	2x20	RCDG	
17	KR. LHONG (PUDENG)	58+880	83	9.0	Steel Truss	Washed-out	Detour	Pipe culvert	150	5x30	PCDG	
18	LHOK KAREUNG	63+340	35	6.0	Steel Truss	Washed-out	Detour	20	35	1x35	PCDG	
19	KR. SAPEK	74+740	35	7.0	Steel Truss	No Damage	-	-	-	-	-	
20	KR. LAMBARO	75+650	12	7.0	Box Culvert	No Damage	-	-	15	1X15	RCDG	
21	KR. BABAH DUA	83+070	61	6.0	Steel Truss	No Damage	-	-	60	2X30	PCDG	
22	KR. ULEE DONG	84+350	11	6.3	Box Culvert	No Damage	-	-	15	1X15	RCDG	
23	KR. LAMBEUSO	86+150	160	6.0	Steel Truss	Washed-out	Detour	Ferry	120	3X40	PCDG	New route KM 084+100
24	New Bridge	85+500	-	-	-	-	Detour	Pipe culvert	40	2X20	RCDG	New route KM 085+500
25	KR. LUBOK	89+420	45	6.0	Steel Truss	Washed-out	Detour	Pipe culvert	30	1X15	RCDG	New route KM 087+700
26	KR . IKEUN	90+750	51	6.0	Steel Truss	Washed-out	Detour	Pipe culvert	60	3X20	RCDG	New route KM 090+000
27	KUALA UNGA	92+480	95	6.0	PC Girder	Washed-out	Detour	Pipe culvert	100	5X20	RCDG	New route KM 092+000
28	KR. JINAMPRONG	98+150	25	6.0	Steel Girder	Washed-out	Bailey Bridge	30	30	1X30	PCDG	
29	KR. KLEUE	99+350	45	6.0	Steel Truss	Washed-out	Detour	Pipe culvert	50	2X25	PCDG	
30	KR. BABAH AWE	100+440	45	6.0	Steel Truss	Washed-out	Detour/Bailey	20	50	2X25	PCDG	
31	KR. NO	106+840	61	6.0	Steel Truss	Washed-out	Detour	Pipe culvert	70	2X35	PCDG	
32	ALUE KHALIFAH ADAM	107+660	16	7.0	RC Girder	No Damage	-	-	-	-	-	
33	KR. GRAKMONG	112+800	47	7.0	Steel Truss	Washed-out	Detour	Pipe culvert	60	2X30	RCDG	
34	ALUE IE MIRAH	113+160	13	6.0	RC Girder	Washed-out	Realigned	-	30	1X30	PCDG	
35	ALUE LHOK II	116+460	16	6.0	RC Girder	No Damage	Realigned		20	1X20	RCDG	
36	KUALA LIGAN	119+080	46	6.0	Steel Truss	Washed-out	Realigned		60	2X30	PCDG	
37	KR. BABAH NIPAH	122+000	82	6.0	Steel Truss	Washed-out	Realigned		100	4X25	PCDG	
38	KUALA BAKONG	125+070	51	7.0	Steel Truss	Washed-out	Realigned		75	3X25	PCDG	
39	KUALA BAK OE	128+430	21	6.0	RC Girder	No Damage	Realigned		25	1X25	PCDG	
40	KR. BABAH NGOM	132+450	51	7.0	Steel Truss	Washed-out	Embankment	-	60	2X30	PCDG	
41	KR. LAGEUN	137+950	82	7.0	Steel Truss	Washed-out	Bailey Bridge	82	105	3X35	PCDG	
42	KR. BABAH PINTO	143+490	31	6.0	Steel Truss	Washed-out	Bailey Bridge	18	50	2X25	PCDG	
43	KR. RIGAIH	149+150	51	7.0	Steel Truss	No Damage	-	-	-	-	-	
44	New Bridge	150+000	-	-	-	-	Bailey Bridge	24	50	2X25	PCDG	New river
45	LHOK BUAYA	152+850	20	6.0	RC Girder	No Damage	-	-	30	2X15	RCDG	
46	BATEE TUTONG	153+850	15	6.2	RC Girder	Washed-out	Detour	Pipe culvert	20	1X20	RCDG	
47	New Bridge	159+000	-	-	-	-	Embankment	Pipe culvert	20	1X20	RCDG	New river
48	KUALA MEURISI	159+280	80	6.0	Steel Truss	Washed-out	Bailey Bridge	36	90	3X25	PCDG	
49	KR. SABE	163+450	110	6.0	Steel Truss	Washed-out	Bailey Bridge	60	120	4X30	PCDG	
50	KR. KABONG	166+300	40	7.0	Steel Truss	Washed-out	Timber	20	40	2X20	RCDG	
51	KR. PANGA	175+000	88	7.5	Steel Truss	Washed-out	Bailey Bridge	90	90	3X40	PCDG	
52	SEUNEUBOK PADANG	182+700	15	6.0	RC Girder	No Damage	-	-	20	1X20	RCDG	
53	LEUNG PEUTUA ABAH	184+650	16	6.0	RC Girder	No Damage	-	-	20	1X20	RCDG	
54	ALUE PAYA GOGO I	189+240	26	7.0	RC Girder	No Damage	-	-	-	-	-	
55	KR. ON	189+550	51	6.0	Steel Truss	No Damage	-	-	56	2X28	PCDG	
56	PANDANG KLENG II	190+300	13	6.0	RC Girder	No Damage	-	-	15	1X15	RCDG	
57	ALUE COT MESJID	192+200	21	6.0	RC Girder	No Damage	-	-	20	1X20	RCDG	
58	KR. TEUNOM	192+540	204	6.0	Steel Truss	No Damage	-	-	220	4X55	STEEL BOX	
59	KR. BAKONG	195+200	45	6.0	RC Slab	No Damage	-	-	50	2X25	PCDG	
60	SUAK ALUE BIE	204+740	24	6.0	RC Girder	Washed-out	Realigned	-	30	1X30	PCDG	New route
61	SUAK BIDOK	207+930	16	6.2	RC Girder	Washed-out	Realigned	-	20	1X20	RCDG	New route
62	LUENG PUTOH	209+080	15	6.0	RC Girder	Washed-out	Realigned	-	20	1X20	RCDG	New route
63	LUENG PUTOH PAYONG	210+800	15	6.0	RC Girder	Washed-out	Realigned	-	90	3X30	RCDG	New route
64	LAM BALEK	217+000	43	4.5	Steel Truss	Washed-out		-	150	3X50	STEEL BOX	
65	KR. WOYLA	219+600	183	6.0	Steel Truss	Washed-out		-	250	5X50	STEEL BOX	
66	SUAK SIRON	223+800	15	6.0	RC Slab	Washed-out	Realigned	-	20	1X20	RCDG	New route
67	SUAK PANTE BREUH	229+320	15	7.0	RC Slab	Washed-out	Realigned	-	20	1X20	RCDG	New route
68	KUALA BUBON	235+730	60	-	-	Washed-out	Realigned	-	90	3X30	PCDG	New route
69	SUAK TIMAH	238+040	30	-	-	Washed-out	Realigned	-	20	1X20	RCDG	New route
70	SUAK NIBONG	239+950	30	-	-	Washed-out	Realigned	-	20	1X20	RCDG	New route
71	SUAK DUO KATA	241+610	35	-	-	Washed-out	Realigned	-	30	2X15	RCDG	New route
72	SUAK RAYA I	243+220	30	-	-	Washed-out	Realigned	-	20	1X20	RCDG	New route
73	SUAK SIGADENG	244+280	40	-	-	Washed-out	Realigned	-	30	2X15	RCDG	New route
74	SUAK RIBEE	245+250	30	-	-	Washed-out	Realigned	-	20	1X20	RCDG	New route
75	SUAK UJONG KALAK	246+650	40	-	-	Washed-out	Realigned	-	30	2X15	RCDG	New route
								Total	3,631	(67 Bridges)		

TABLE 6.1-3 ROUGH ESTIMATE OF RECONSTRUCTION COST

Cross Section Type			Length	Unit Cost/km (m) (Million Yen)	Cost (Million Yen)
Sections which utilize Existing Road	Type E-a	Widening of Existing Road (Flat Section)	68.4 km	25	1,710
	Type E-b	Widening of Existing Road (Cliff / Sea)	12.8 km	40	512
	Type E-c	Widening of Existing Road (Soft Ground)	57.7 km	65	3,751
	Type E-d	Widening of Existing Road (Mountainous)	30.2 km	70	2,114
	Sub-total		**169.1 km**		**8,087**
Sections which Re-aligned from the Existing Road (New Road)	Type R-a	New road at flat section	5.9 km	35	207
	Type R-b	New road near the sea	5.0 km	65	325
	Type R-c	New road at soft ground section	48.7 km	80	3,896
	Type R-d	New road at forest section	4.0 km	50	200
	Type R-e	New road at mountainous section	2.2 km	85	187
	Type R-f	New road at cut section	1.1 km	90	99
	Sub-total		**66.9 km**		**4,914**
Road Section Total			236.0 km		13,001
Bridge Reconstruction			3,631 m	1.6	5,810
GRAND TOTAL			**-**		**18,811 (1,618 Billion Rp)**

6.2 USAID's RECONSTRUCTION PLAN

The road alignment for reconstruction selected by USAID is shown in **Figure 6.1-1.**

The alignment of existing road is basically followed from Banda Aceh up to Km. 104 with three short realigned sections. From Km 104, totally new alignment was selected up to Meulaboh. New Alignment is located 4 to 6 km inland side from the coast. The main concept for this section is to select tsunami-free alignment, however, dense forest has to be opened up and lands for road right-of-way must be required.