Plan(20/23) 1:5000

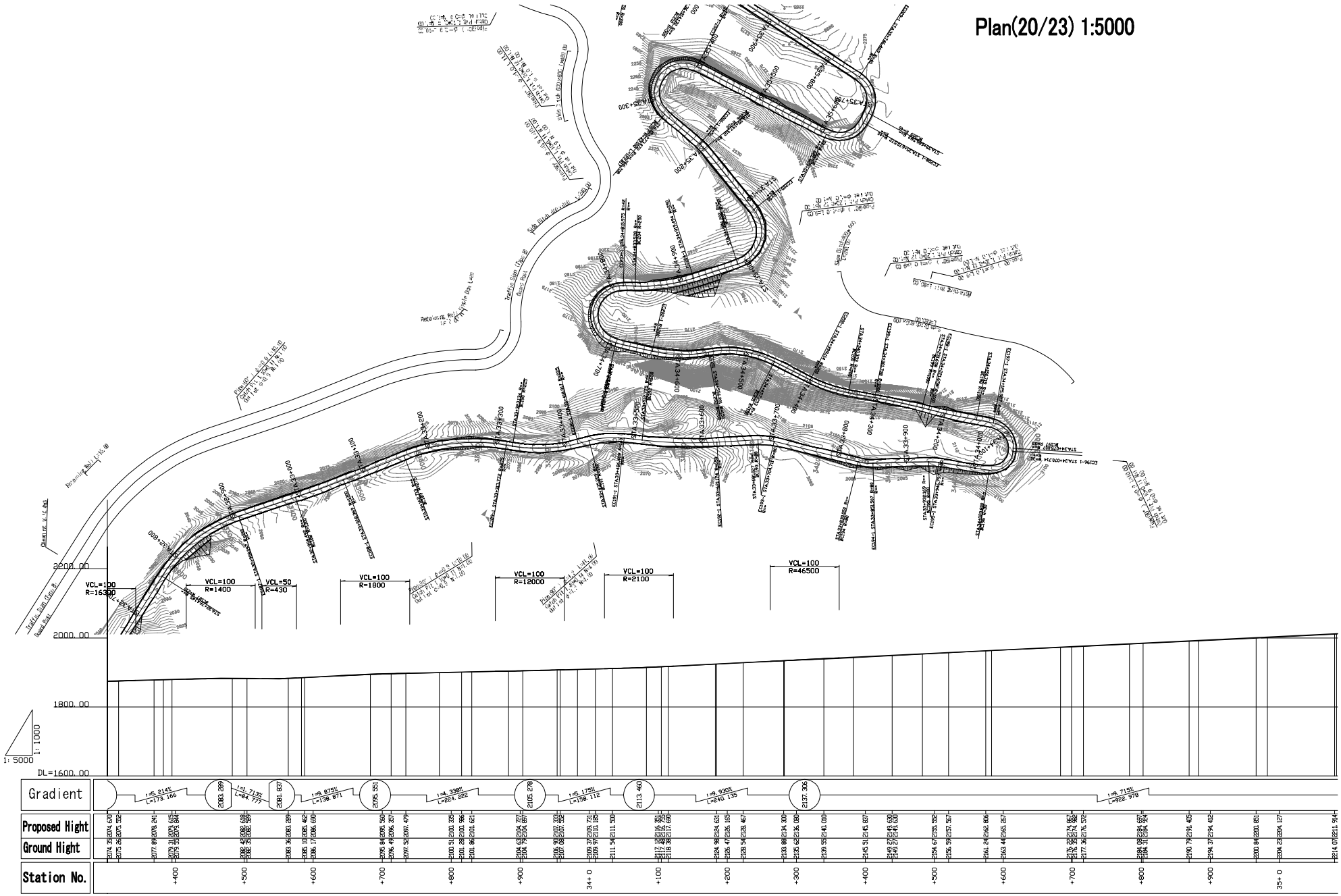

ETHIOPIA ROAD AUTHORITY THE FEDERAL DEMOCRATIC REPUBLIC OF ETHIOPIA	THE PROJECT FOR REHABILITATION OF TRUNK ROAD PHASE III IN THE FEDERAL DEMOCRATIC REPUBLIC OF ETHIOPIA	ORIENTAL CONSULTANTS CO.,LTD IN ASSOCIATION WITH JAPAN ENGINEERING CONSULTANTS CO.,LTD	Plan-Profile(20/23)	SCALE	ETHIOPIA ROAD AUTHORITY THE FEDERAL DEMOCRATIC REPUBLIC OF ETHIOPIA	DESIGN	ORIENTAL CONSULTANTS CO.,LTD IN ASSOCIATION WITH JAPAN ENGINEERING CONSULTANTS CO.,LTD	REVIEW	DATE	SHEET NO
				shown		DATE 04.05.##		DATE 04.05.##	May 2004	20

Plan(21/23) 1:5000

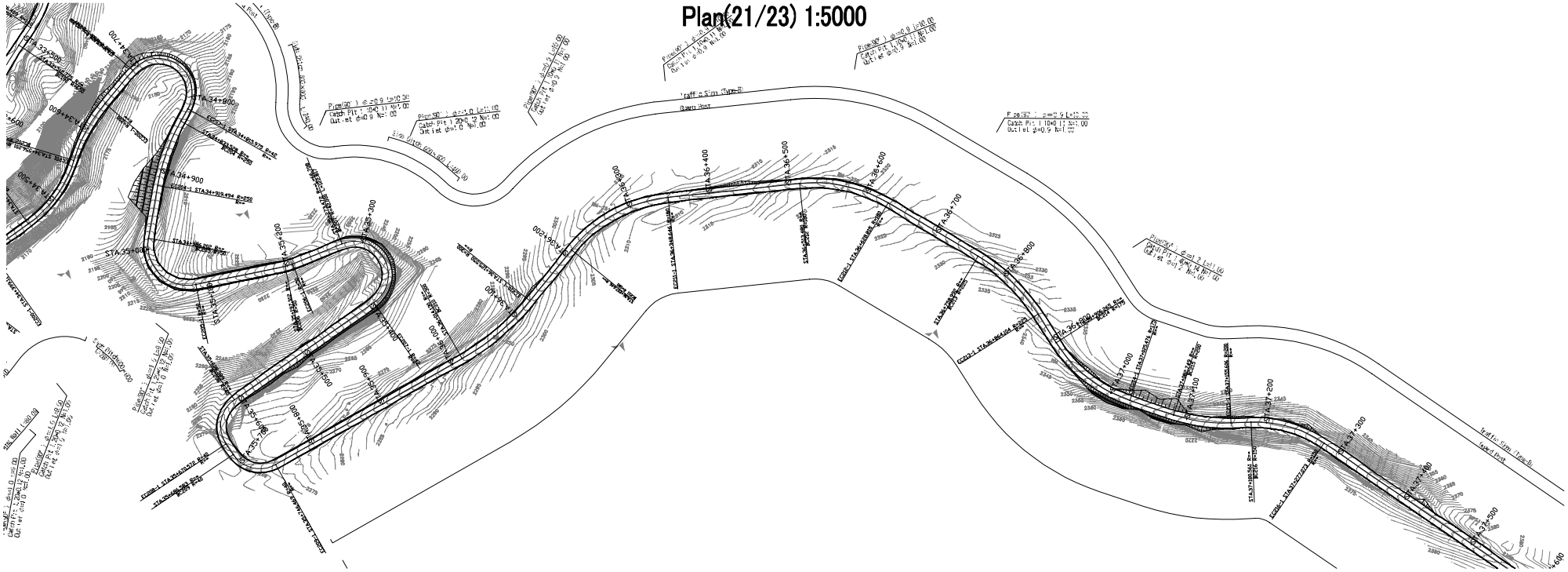

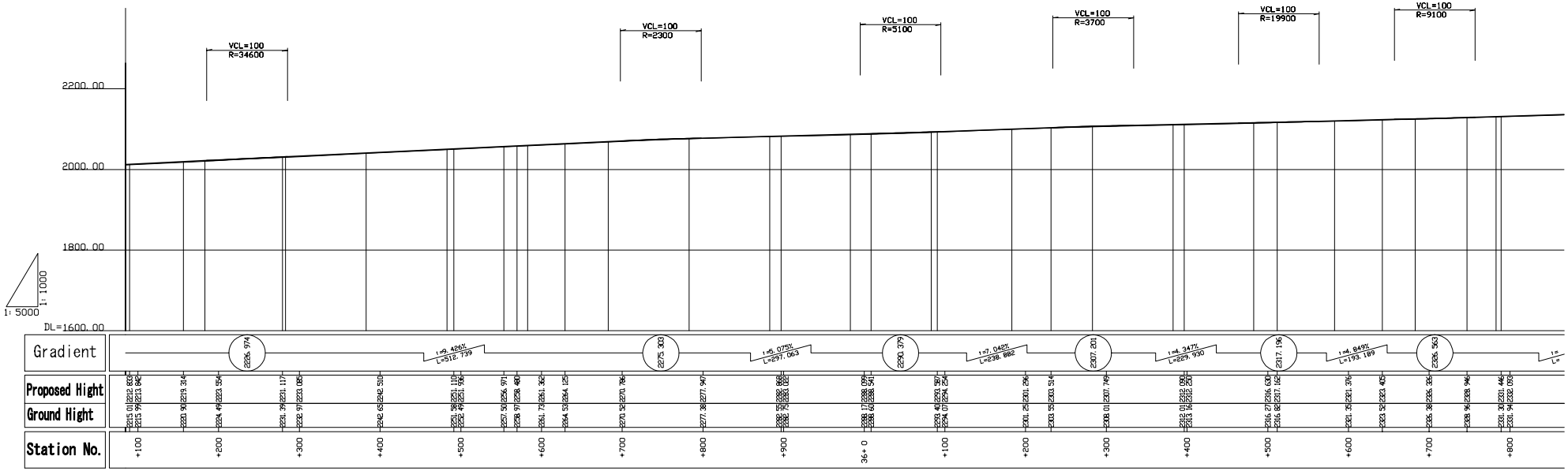

ETHIOPIA ROAD AUTHORITY THE FEDERAL DEMOCRATIC REPUBLIC OF ETHIOPIA	THE PROJECT FOR REHABILITATION OF TRUNK ROAD PHASE III IN THE FEDERAL DEMOCRATIC REPUBLIC OF ETHIOPIA	ORIENTAL CONSULTANTS CO.,LTD IN ASSOCIATION WITH JAPAN ENGINEERING CONSULTANTS CO.,LTD	Plan-Profile(21/23)	SCALE	ETHIOPIA ROAD AUTHORITY THE FEDERAL DEMOCRATIC REPUBLIC OF ETHIOPIA	DESIGN	ORIENTAL CONSULTANTS CO.,LTD IN ASSOCIATION WITH JAPAN ENGINEERING CONSULTANTS CO.,LTD	REVIEW	DATE	SHEET NO
				shown		DATE 04.05.##		DATE 04.05.##	May 2004	21

Plan(22/23) 1:5000

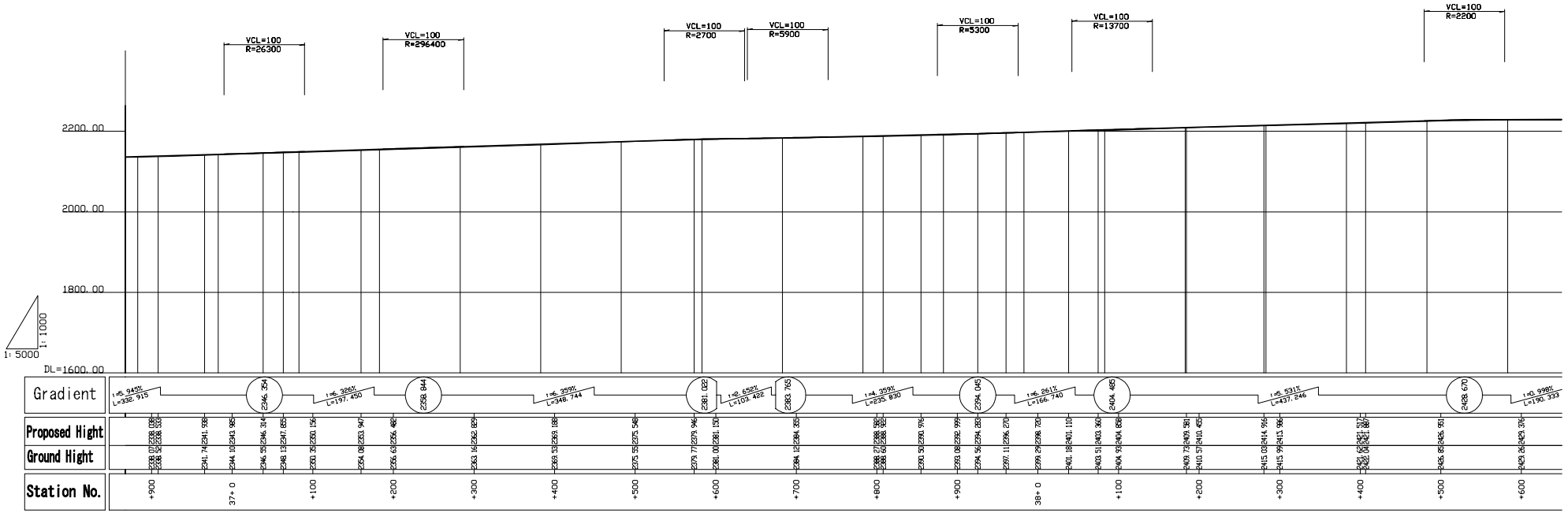

ETHIOPIA ROAD AUTHORITY THE FEDERAL DEMOCRATIC REPUBLIC OF ETHIOPIA	THE PROJECT FOR REHABILITATION OF TRUNK ROAD PHASE III IN THE FEDERAL DEMOCRATIC REPUBLIC OF ETHIOPIA	ORIENTAL CONSULTANTS CO.,LTD IN ASSOCIATION WITH JAPAN ENGINEERING CONSULTANTS CO.,LTD	Plan-Profile(22/23)	SCALE	ETHIOPIA ROAD AUTHORITY THE FEDERAL DEMOCRATIC REPUBLIC OF ETHIOPIA	DESIGN	ORIENTAL CONSULTANTS CO.,LTD IN ASSOCIATION WITH JAPAN ENGINEERING CONSULTANTS CO.,LTD	REVIEW	DATE	SHEET NO
				shown		DATE 04.05.##		DATE 04.05.##	May 2004	22

Plan(23/23) 1:5000

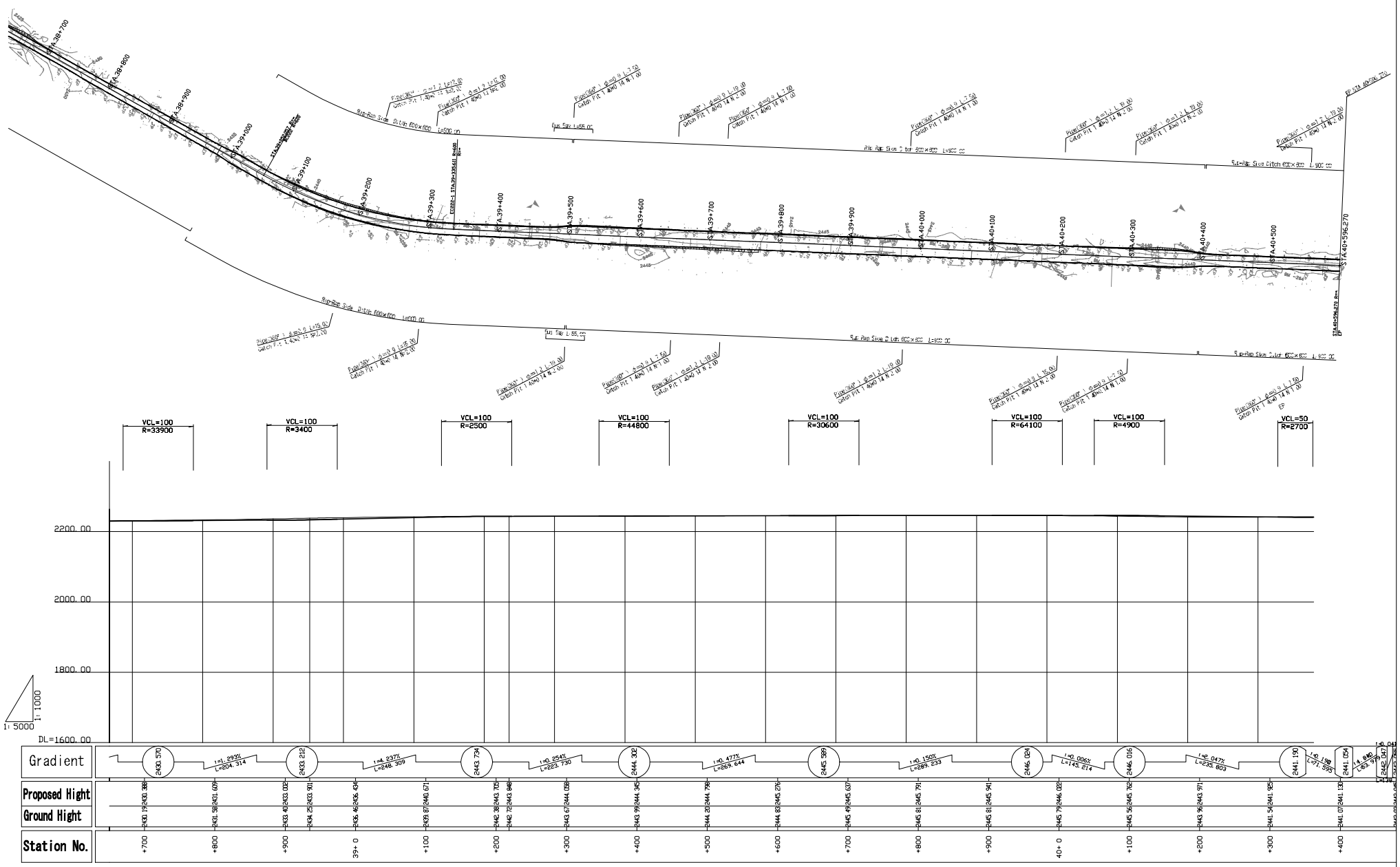

ETHIOPIA ROAD AUTHORITY THE FEDERAL DEMOCRATIC REPUBLIC OF ETHIOPIA	THE PROJECT FOR REHABILITATION OF TRUNK ROAD PHASE III IN THE FEDERAL DEMOCRATIC REPUBLIC OF ETHIOPIA	ORIENTAL CONSULTANTS CO.,LTD IN ASSOCIATION WITH JAPAN ENGINEERING CONSULTANTS CO.,LTD	Plan-Profile(23/23)	SCALE	ETHIOPIA ROAD AUTHORITY THE FEDERAL DEMOCRATIC REPUBLIC OF ETHIOPIA	DESIGN	ORIENTAL CONSULTANTS CO.,LTD IN ASSOCIATION WITH JAPAN ENGINEERING CONSULTANTS CO.,LTD	REVIEW	DATE	SHEET NO
				shown		DATE 04.05.##		DATE 04.05.##	May 2004	23

Typical Cross Sections (1/4)

S=1:100

(Dejen Town: Town Center)
(No.39+500~No.40+400)

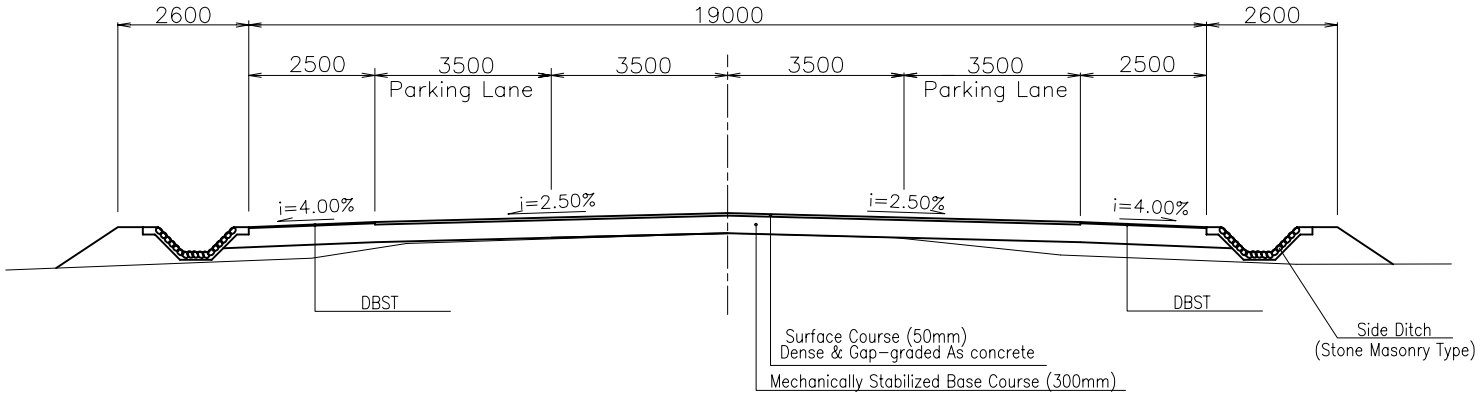

(Dejen Town: Out of center)
(No.39+000~No.39+500)
(No.40+400~No.41+300)

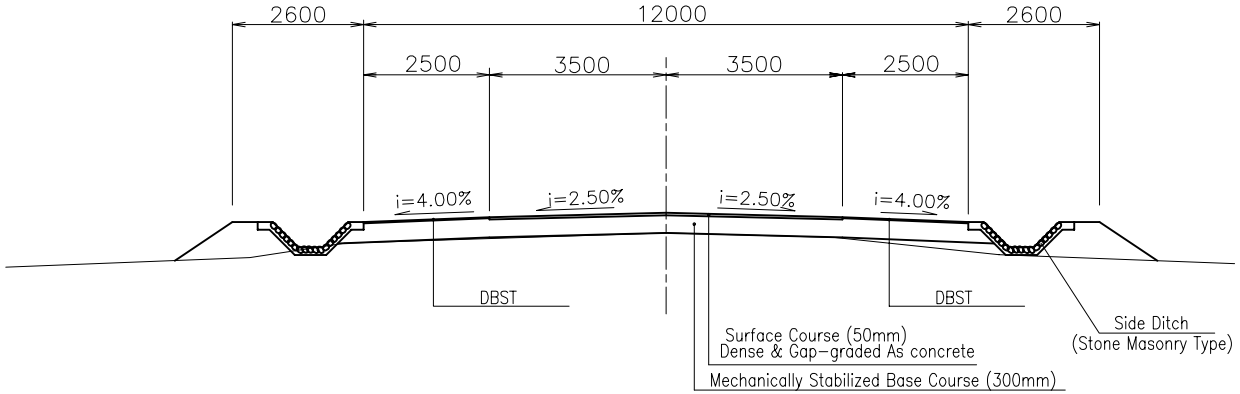

ETHIOPIA ROAD AUTHORITY THE FEDERAL DEMOCRATIC REPUBLIC OF ETHIOPIA	THE PROJECT FOR REHABILITATION OF TRUNK ROAD PHASE III IN THE FEDERAL DEMOCRATIC REPUBLIC OF ETHIOPIA	ORIENTAL CONSULTANTS CO.,LTD IN ASSOCIATION WITH JAPAN ENGINEERING CONSULTANTS CO.,LTD	Typical CrossSection(4/4)	SCALE S=1:100	ETHIOPIA ROAD AUTHORITY THE FEDERAL DEMOCRATIC REPUBLIC OF ETHIOPIA	DESIGN DATE 04.05.##	ORIENTAL CONSULTANTS CO.,LTD IN ASSOCIATION WITH JAPAN ENGINEERING CONSULTANTS CO.,LTD	REVIEW DATE 04.05.##	DATE May 2004	SHEET NO 24

Typical Cross Sections
(2/4)

S=1 : 100

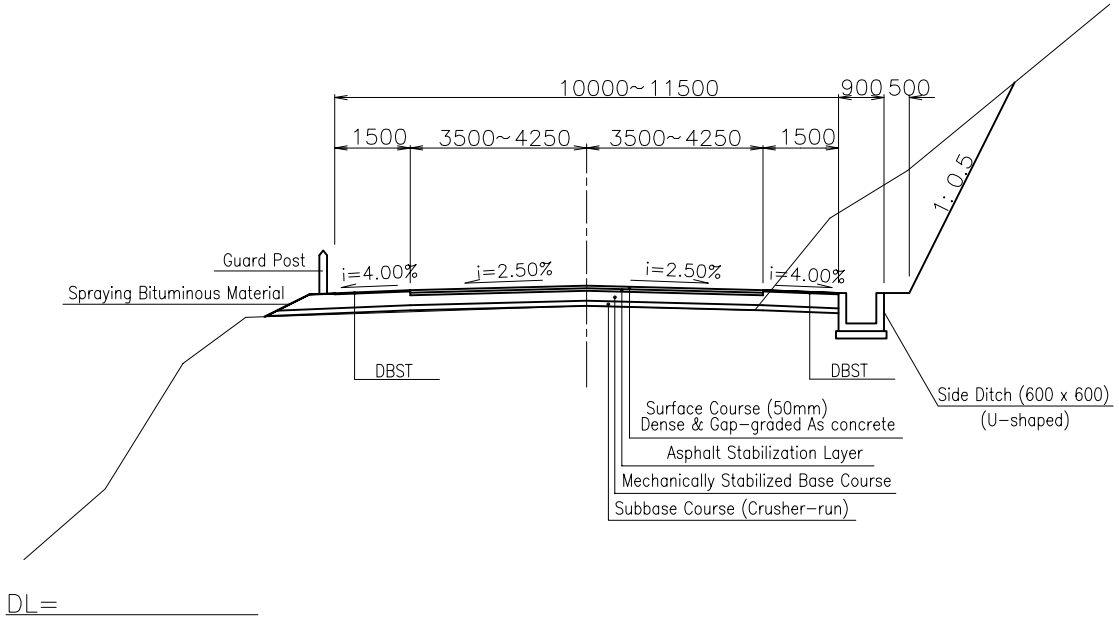

Pavement Composition

CBR	Composition	Section
5	Standard (As 50, Base 350, Subbase 100)	• 1+250~2+050(L=800m) • 4+300~4+800(L=500m) • 6+900~7+400(L=500m) • 8+000~9+700(L=1,700m)
	As Stabilization (As 50, As Stabi. 50, Base 250, Subbase 100)	• 0+000~0+800(L=800m) • 1+000~1+250(L=250m) • 2+050~2+100(L=50m) • 3+100~4+300(L=1,200m) • 4+800~6+900(L=2,100m) • 7+400~8+000(L=600m) • 9+700~11+000(L=1,300m)
33	Standard (As 50, Base 250)	—
	As Stabilization (As 50, As Stabi. 50, Base 150)	• 11+000~11+700(L=700m) • 12+200~13+000(L=800m) • 13+600~14+200(L=600m) • 14+400~15+800(L=1,400m) • 16+200~17+000(L=800m)
7	Standard (As 50, Base 300, Subbase 100)	• 22+500~23+000(L=500m)
	As Stabilization (As 50, As Stabi. 50, Base 200, Subbase 100)	• 22+100~22+500(L=400m) • 23+000~26+000(L=3,000m)
15	Standard (As 50, Base 300)	• 29+000~30+450(L=1,450m) • 30+950~32+900(L=1,950m) • 35+900~39+000(L=3,100m)
	As Stabilization (As 50, As Stabi. 50, Base 200)	• 26+000~29+000(L=3,000m) • 30+450~30+950(L=500m) • 32+900~34+200(L=1,300m) • 34+600~35+900(L=1,300m)

Widening at Curve Section

Radius of Curve(m)	Curve Widening: Two Lanes(m)
>250	0.0
120–250	0.3+0.3=0.6
60–120	0.45+0.45=0.9
40–60	0.6+0.6=1.2
20–40	0.75+0.75=1.5

ETHIOPIA ROAD AUTHORITY THE FEDERAL DEMOCRATIC REPUBLIC OF ETHIOPIA	THE PROJECT FOR REHABILITATION OF TRUNK ROAD PHASE III IN THE FEDERAL DEMOCRATIC REPUBLIC OF ETHIOPIA	ORIENTAL CONSULTANTS CO.,LTD IN ASSOCIATION WITH JAPAN ENGINEERING CONSULTANTS CO.,LTD	Typical CrossSection(1/4)	SCALE S=1:100	ETHIOPIA ROAD AUTHORITY THE FEDERAL DEMOCRATIC REPUBLIC OF ETHIOPIA	DESIGN DATE 04.05.##	ORIENTAL CONSULTANTS CO.,LTD IN ASSOCIATION WITH JAPAN ENGINEERING CONSULTANTS CO.,LTD	REVIEW DATE 04.05.##	DATE May 2004	SHEET NO 25

Typical Cross Sections (3/4)

S=1 : 100

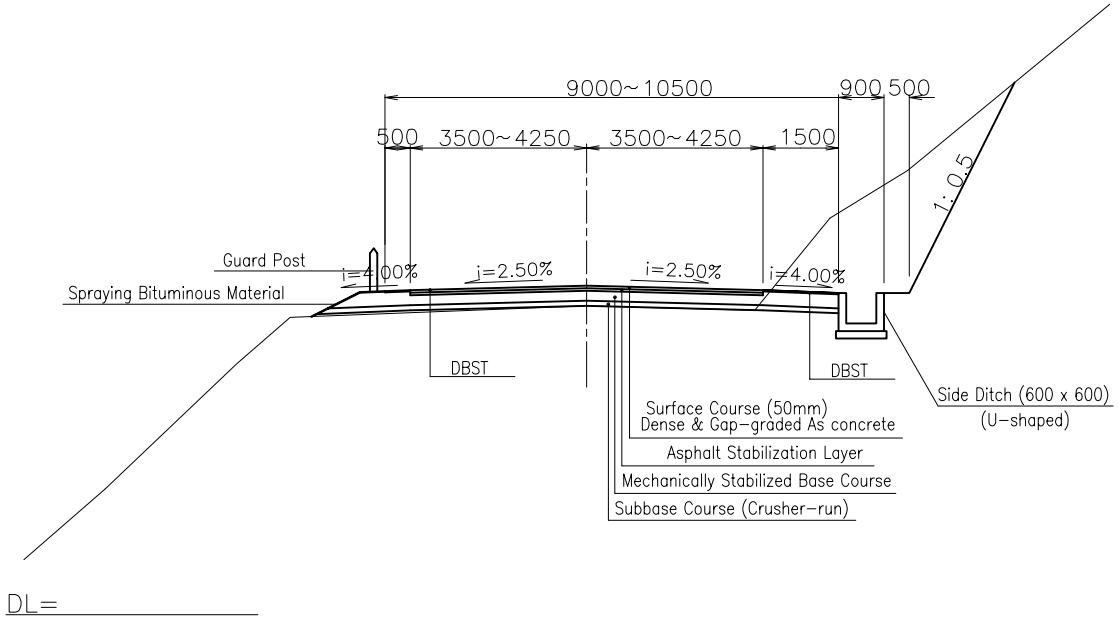

Pavement Composition

CBR	Composition	Section
5	Standard As 50 Base 350 Subbase 100	—
	As Stabilization As 50 As Stabi. 50 Base 250 Subbase 100	—
33	Standard As 50 Base 250	—
	As Stabilization As 50 As Stabi. 50 Base 150	• 11+700~12+200(L=500m) • 13+000~13+600(L=600m) • 15+800~16+200(L=400m) • 19+000~19+700(L=700m)
7	Standard As 50 Base 300 Subbase 100	—
	As Stabilization As 50 As Stabi. 50 Base 200 Subbase 100	• 20+000~20+400(L=400m)
15	Standard As 50 Base 300	—
	As Stabilization As 50 As Stabi. 50 Base 200	—

Widening at Curve Section

Radius of Curve(m)	Curve Widening: Two Lanes(m)
>250	0.0
120–250	0.3+0.3=0.6
60–120	0.45+0.45=0.9
40–60	0.6+0.6=1.2
20–40	0.75+0.75=1.5

ETHIOPIA ROAD AUTHORITY THE FEDERAL DEMOCRATIC REPUBLIC OF ETHIOPIA	THE PROJECT FOR REHABILITATION OF TRUNK ROAD PHASE III IN THE FEDERAL DEMOCRATIC REPUBLIC OF ETHIOPIA	ORIENTAL CONSULTANTS CO.,LTD IN ASSOCIATION WITH JAPAN ENGINEERING CONSULTANTS CO.,LTD	Typical CrossSection(2/4)	SCALE S=1:100	ETHIOPIA ROAD AUTHORITY THE FEDERAL DEMOCRATIC REPUBLIC OF ETHIOPIA	DESIGN DATE 04.05.##	ORIENTAL CONSULTANTS CO.,LTD IN ASSOCIATION WITH JAPAN ENGINEERING CONSULTANTS CO.,LTD	REVIEW DATE 04.05.##	DATE May 2004	SHEET NO 26

Typical Cross Sections (4/4)

S=1:100

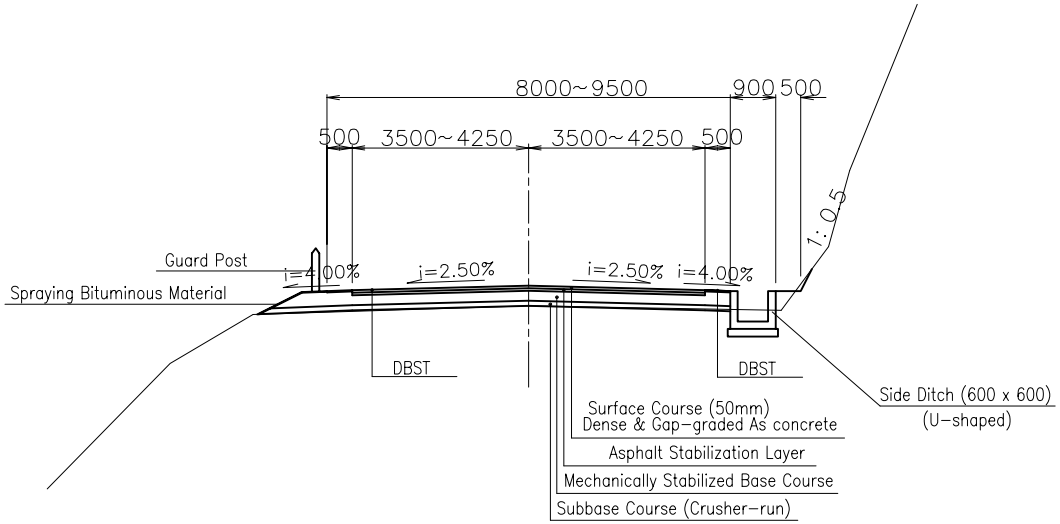

DL=

Widening at Curve Section

Radius of Curve(m)	Curve Widening: Two Lanes(m)
>250	0.0
120–250	0.3+0.3=0.6
60–120	0.45+0.45=0.9
40–60	0.6+0.6=1.2
20–40	0.75+0.75=1.5

Pavement Composition

CBR	Composition	Section
5	Standard As 50 Base 350 Subbase 100	—
	As Stabilization As 50 As Stabi. 50 Base 250 Subbase 100	• 0+800~1+000(L=200m) • 2+100~3+100(L=1,000m)
33	Standard As 50 Base 250	—
	As Stabilization As 50 As Stabi. 50 Base 150	• 14+200~14+400(L=200m) • 17+000~19+000(L=2,000m)
7	Standard As 50 Base 300 Subbase 100	—
	As Stabilization As 50 As Stabi. 50 Base 200 Subbase 100	• 20+400~22+100(L=1,700m)
15	Standard As 50 Base 300	—
	As Stabilization As 50 As Stabi. 50 Base 200	• 34+200~34+600(L=400m)

ETHIOPIA ROAD AUTHORITY THE FEDERAL DEMOCRATIC REPUBLIC OF ETHIOPIA	THE PROJECT FOR REHABILITATION OF TRUNK ROAD PHASE III IN THE FEDERAL DEMOCRATIC REPUBLIC OF ETHIOPIA	ORIENTAL CONSULTANTS CO.,LTD IN ASSOCIATION WITH JAPAN ENGINEERING CONSULTANTS CO.,LTD	Typical CrossSection(3/4)	SCALE S=1:100	ETHIOPIA ROAD AUTHORITY THE FEDERAL DEMOCRATIC REPUBLIC OF ETHIOPIA	DESIGN DATE 04.05.##	ORIENTAL CONSULTANTS CO.,LTD IN ASSOCIATION WITH JAPAN ENGINEERING CONSULTANTS CO.,LTD	REVIEW DATE 04.05.##	DATE May 2004	SHEET NO 27

GENERAL LAYOUT

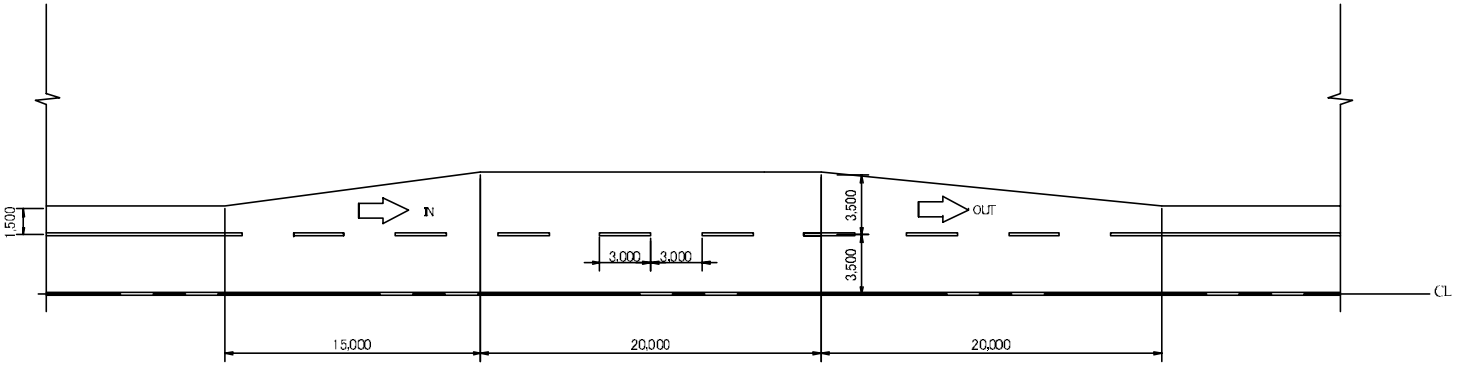

ETHIOPIA ROAD AUTHORITY DEMOCRATIC REPUBLIC OF ETHIOPIA	THE PROJECT FOR REHABILITATION OF TRUNK ROAD PHASE III IN THE FEDERAL DEMOCRATIC REPUBLIC OF ETHIOPIA	ORIENTAL CONSULTANTS CO., LTD IN ASSOCIATION WITH JAPAN ENGINEERING CONSULTANTS CO., LTD	Bus Bay Structure	SCALE S=1:500	ETHIOPIA ROAD AUTHORITY THE FEDERAL DEMOCRATIC REPUBLIC OF ETHIOPIA	APPROVED DATE	ORIENTAL CONSULTANTS CO., LTD. IN ASSOCIATION WITH JAPAN ENGINEERING CONSULTANTS CO., LTD.	PREPARED CHECKED SUBMITTED	DATE MAY.2004	SHEET NO 28

Road Structures (1)

RC Pipe

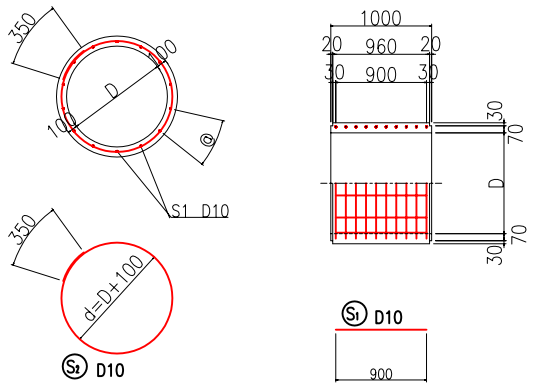

Dimension & Reinforcement for pipe

	S1			S2			
Dimension	@	Nos	l(mm)	d	Nos	l(mm)	Remarks
D450	241	7	900	550	10	1938	
D600	240	9	900	700	10	2409	
D900	261	12	900	1000	10	3352	
D1000	244	14	900	1100	10	3868	
D1200	252	16	900	1300	10	4294	
D1500	249	20	900	1600	10	5237	

U shaped Side Ditch
600×600

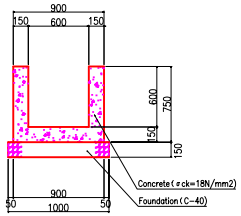

Materials

Name	Specification	Unit	Quantity	Per 10m Remarks
Concrete	σ ck=18N/mm2	m3	3.150	
Form		m2	27.000	
Foundation	C-40 t=15cm	m2	10.000	

Side Ditch
Stone Masonry Type

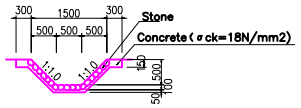

Materials

Name	Specification	Unit	Quantity	Per 10m Remarks
Concrete	σ ck=18N/mm2	m3	18.70	
Form		m2	30.0	
Foundation		m2	208.00	

Pipe Culvert
P1-RC

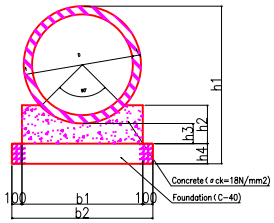

Dimension

Unit: mm

Type	D	t	b1	b2	h1	h2	h3	h4	Remarks
P1-RC-D900	900	100	1050	1250	1400	360	200	150	
P1-RC-D1000	1000	100	1200	1400	1564	380	200	200	
P1-RC-D1200	1200	100	1400	1600	1840	460	250	200	

Materials

Name	Specification	Unit	P1-RC-D900	P1-RC-D1000	P1-RC-D1200	Remarks
Concrete	σ ck=18N/mm2	m3	2.947	3.514	4.998	
Form		m2	7.200	7.600	9.200	
Foundation	C-40 t=15cm	m2	12.500	–	–	
	C-40 t=20cm	m2	–	14.000	16.000	
RC Concrete Pipe	D900	No	4.1	–	–	
	D1000	No	–	4.1	–	
	D1200	No	–	–	4.1	

Gravity Retaining Wall
(Type 1)

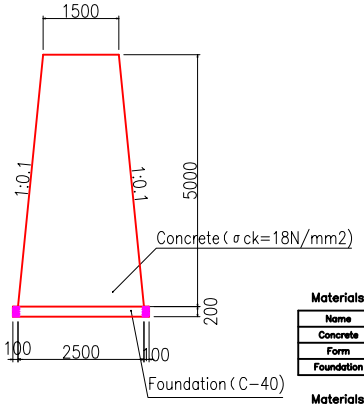

Gravity Retaining Wall
(Type 2)

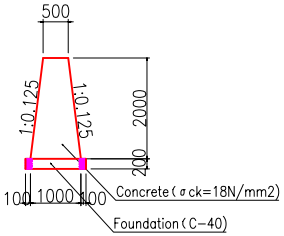

Materials (Type 1)

Name	Specification	Unit	Quantity	Per 10m Remarks
Concrete	σ ck=18N/mm2	m3	100.000	
Form		m2	110.500	
Foundation	RC-40 t=20cm	m2	27.000	

Materials (Type 2)

Name	Specification	Unit	Quantity	Per 10m Remarks
Concrete	σ ck=18N/mm2	m3	15.000	
Form		m2	41.820	
Foundation	RC-40 t=20cm	m2	12.000	

Pipe Culvert
P4

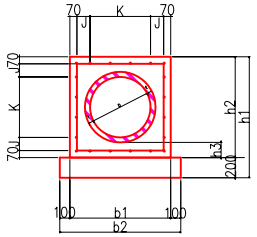

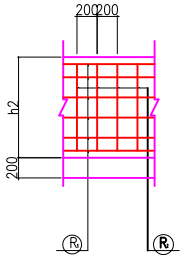

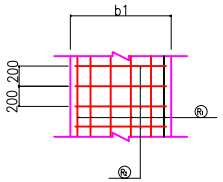

Dimension

Unit: mm

⊞ ⊕	D	t	b1	b2	h1	h2	h3	J	K	Remarks
P4-D600	600	100	1000	1250	1400	360	200	150	600(=3×200)	
P4-D900	900	100	1460	1400	1564	380	200	200	600(=3×200)	
P4-D1000	1000	100	1580	1600	1840	460	250	200	600(=3×200)	
P4-D1200	1200	100	1400	1600	1840	460	250	200	600(=3×200)	

Materials

Name	Specification	Unit	P4-D600	P4-D900	P4-D1000	P4-D1200	Remarks
Concrete	σ ck=18N/mm2	m3	6.125	12.657	14.323	17.225	
Form		m2	20.000	29.200	31.600	36.000	
Foundation	C-40 t=15cm	m2	12.000	–	–	–	
	C-40 t=20cm	m2	–	16.600	17.800	20.000	
RC Concrete Pipe	D900	No	4.1	–	–	–	
	D1000	No	–	4.1	–	–	
	D1200	No	–	–	4.1	4.1	
Reinforcing Bar	D13	kg	416.910	309.450	333.330	398.000	
	D16	kg	–	436.800	499.200	561.600	

ETHIOPIA ROAD AUTHORITY THE FEDERAL DEMOCRATIC REPUBLIC OF ETHIOPIA	THE PROJECT FOR REHABILITATION OF TRUNK ROAD PHASE III IN THE FEDERAL DEMOCRATIC REPUBLIC OF ETHIOPIA	ORIENTAL CONSULTANTS CO.,LTD IN ASSOCIATION WITH JAPAN ENGINEERING CONSULTANTS CO.,LTD	Structure(1/3)	SCALE S=1:100	ETHIOPIA ROAD AUTHORITY THE FEDERAL DEMOCRATIC REPUBLIC OF ETHIOPIA	DESIGN DATE 04.05.##	ORIENTAL CONSULTANTS CO.,LTD IN ASSOCIATION WITH JAPAN ENGINEERING CONSULTANTS CO.,LTD	REVIEW DATE 04.05.##	DATE May 2004	SHEET NO 29

Road Structures (2)

Slope Drainage Facilities

Side View

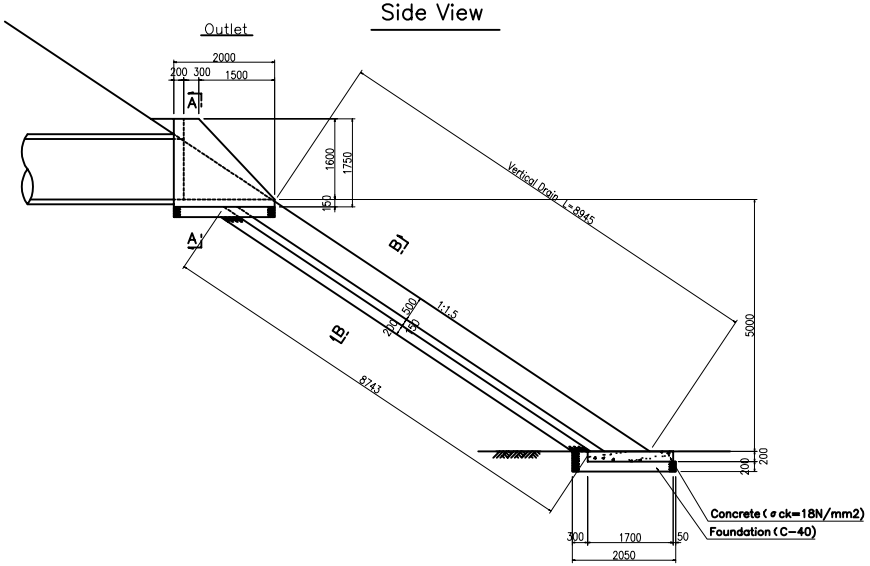

Plan

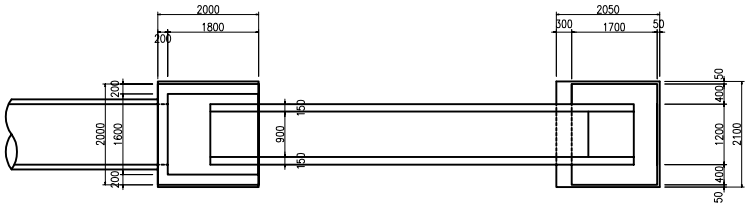

Outlet

A – A

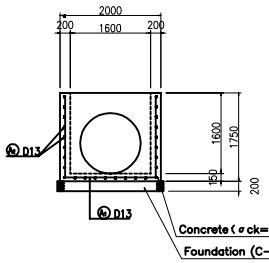

Side View

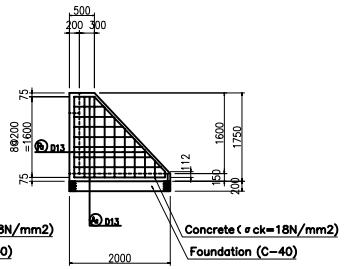

Vertical Drain

B – B

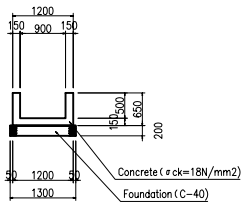

Bar Arrangement

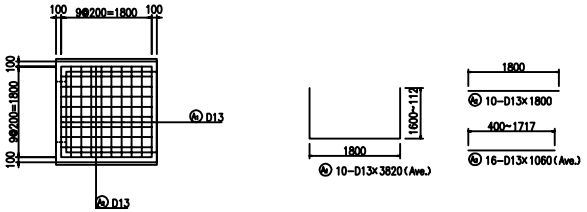

List of Bar Arrangement

符号	D	Length	Nos	Unit Weight	Weight	Total Weight	Remarks
A 1	D13	3820	10	0.995	3.80	38	Ave.
2	D13	1800	10	0.995	1.79	18	
3	D13	1060	16	0.995	1.05	17	Ave.
	D13	74	kg				
Total Weight		74	kg				

Materials

Name	Specification	Unit	Outlet (φ900)	Outlet (φ1000)	Outlet (φ1200)	Vertical Drain	Remarks
Concrete	σck=18N/mm2	m3	1.180	1.150	1.081	2.424	
Form		m2	10.960	10.960	10.960	32.560	
Foundation	C-40 t=15cm	m2	4.200	4.200	4.200	11.366	
Bar	D13	kg	74	74	74		

ETHIOPIA ROAD AUTHORITY THE FEDERAL DEMOCRATIC REPUBLIC OF ETHIOPIA	THE PROJECT FOR REHABILITATION OF TRUNK ROAD PHASE III IN THE FEDERAL DEMOCRATIC REPUBLIC OF ETHIOPIA	ORIENTAL CONSULTANTS CO.,LTD IN ASSOCIATION WITH JAPAN ENGINEERING CONSULTANTS CO.,LTD	Structure(2/3)	SCALE S=1:100	ETHIOPIA ROAD AUTHORITY THE FEDERAL DEMOCRATIC REPUBLIC OF ETHIOPIA	DESIGN DATE 04.05.##	ORIENTAL CONSULTANTS CO.,LTD IN ASSOCIATION WITH JAPAN ENGINEERING CONSULTANTS CO.,LTD	REVIEW DATE 04.05.##	DATE May 2004	SHEET NO 30

# SIGN POST A
S=1/50

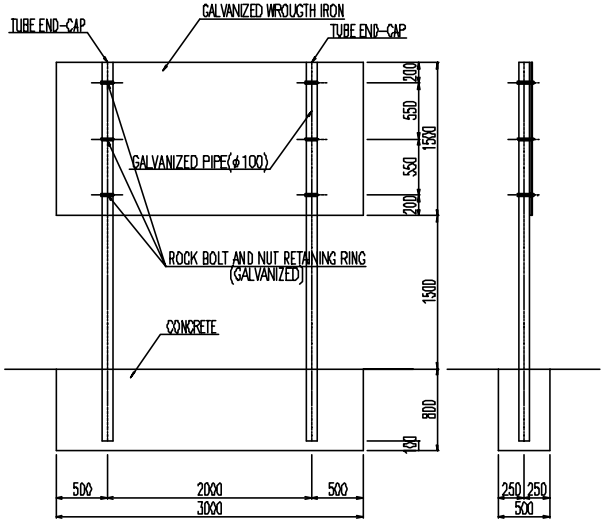

PER EACH

ITEM	STANDARD	UNIT	QUANTITY	REMARKS
CONCRETE	σck=160kg/cm²	cu.m	1.20	
FORM		sq.m	5.60	
SIGN IRON	GALVANIZED	each	1.00	
PIPE	〃	m	7.40	
BOLT-NUT	〃	each	6.00	
END-CAP	TUBE	〃	2.00	

# SIGN POST B
S=1/50

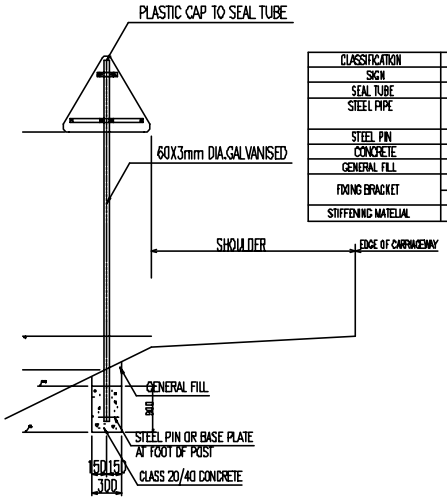

PER EACH

CLASSIFICATION	STANDARD	unit	QUANTITY	REMARKS
SIGN	ALUMINIUM PLATE	no.	1.0	
SEAL TUBE	PLASTIC CAP	〃	1.0	
STEEL PIPE	φ60X3mm×3.5m GALVANISED	〃	1.0	
STEEL PIN	GALVANISED	no.	1.0	OR BASE PLATE
CONCRETE	BB1628	cu.m	0.041	
GENERAL FILL		〃	0.016	
FIXING BRACKET	TYPE-A	no.	1.0	
	TYPE-B	no.	1.0	
STIFFENING MATELIAL	ANGLE AND PREFORM FLANGE	〃	1.0	

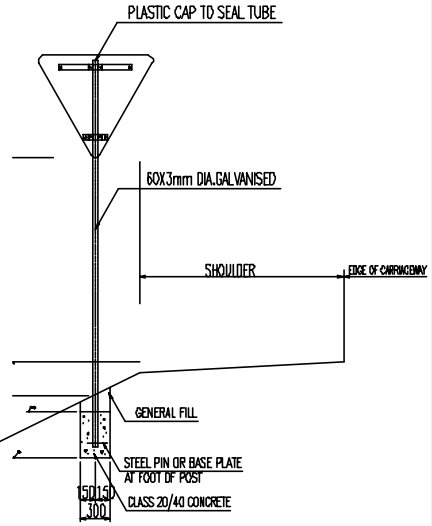

PER EACH

CLASSIFICATION	STANDARD	unit	QUANTITY	REMARKS
SIGN	ALUMINIUM PLATE	no.	1.0	
SEAL TUBE	PLASTIC CAP	〃	1.0	
STEEL PIPE	φ60X3mm×3.5m GALVANISED	〃	1.0	
STEEL PIN	GALVANISED	no.	1.0	OR BASE PLATE
CONCRETE	BB1628	cu.m	0.041	
GENERAL FILL		〃	0.016	
FIXING BRACKET	TYPE-A	no.	1.0	
	TYPE-B	no.	1.0	
STIFFENING MATELIAL	ANGLE AND PREFORM FLANGE	〃	1.0	

# KILOMETER POST
S=1/50

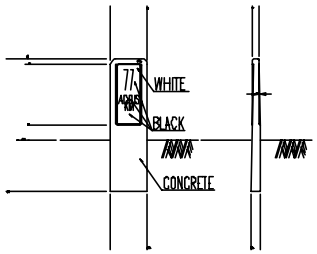

PER EACH

ITEM	STANDARD	UNIT	QUANTITY	REMARKS
CONCRETE	σck=210kg/cm	cu.m	0.04	
FORM		sq.m	1.14	
PLATE		EACH	2.00	

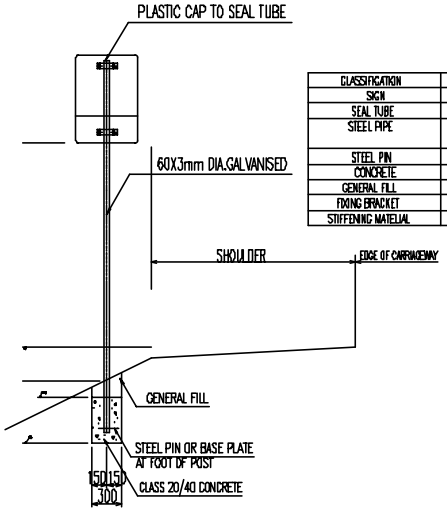

PER EACH

CLASSIFICATION	STANDARD	unit	QUANTITY	REMARKS
SIGN	ALUMINIUM PLATE	no.	1.0	
SEAL TUBE	PLASTIC CAP	〃	1.0	
STEEL PIPE	φ60X3mm×3.5m GALVANISED	〃	1.0	
STEEL PIN	GALVANISED	no.	1.0	OR BASE PLATE
CONCRETE	BB1628	cu.m	0.041	
GENERAL FILL		〃	0.016	
FIXING BRACKET	TYPE-A	no.	2.0	
STIFFENING MATELIAL	ANGLE AND PREFORM FLANGE	〃	1.0	

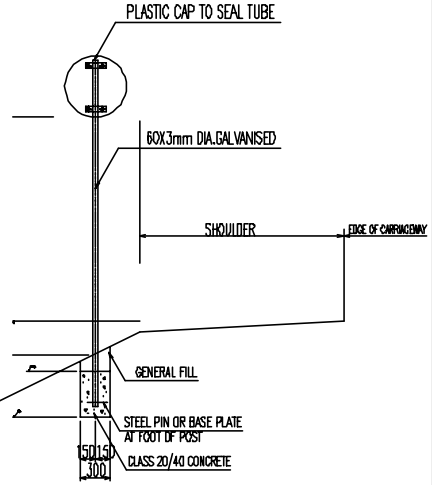

PER EACH

CLASSIFICATION	STANDARD	unit	QUANTITY	REMARKS
SIGN	ALUMINIUM PLATE	no.	1.0	
SEAL TUBE	PLASTIC CAP	〃	1.0	
STEEL PIPE	φ60X3mm×3.5m GALVANISED	〃	1.0	
STEEL PIN	GALVANISED	no.	1.0	OR BASE PLATE
CONCRETE	BB1628	cu.m	0.041	
GENERAL FILL		〃	0.016	
FIXING BRACKET	TYPE-A	no.	2.0	
STIFFENING MATELIAL	ANGLE AND PREFORM FLANGE	〃	1.0	

ETHIOPIA ROAD AUTHORITY THE FEDERAL DEMOCRATIC REPUBLIC OF ETHIOPIA	THE PROJECT FOR REHABILITATION OF TRUNK ROAD PHASE IX IN THE FEDERAL DEMOCRATIC REPUBLIC OF ETHIOPIA	ORIENTAL CONSULTANTS CO.,LTD IN ASSOCIATION WITH JAPAN ENGINEERING CONSULTANTS CO.,LTD	Structure(3/3)	SCALE S=1:100	ETHIOPIA ROAD AUTHORITY THE FEDERAL DEMOCRATIC REPUBLIC OF ETHIOPIA	DESIGN DATE 04.05.##	ORIENTAL CONSULTANTS CO.,LTD IN ASSOCIATION WITH JAPAN ENGINEERING CONSULTANTS CO.,LTD	REVIEW DATE 04.05.##	DATE May 2004	SHEET NO 31

PEDESTRIAN MARKING

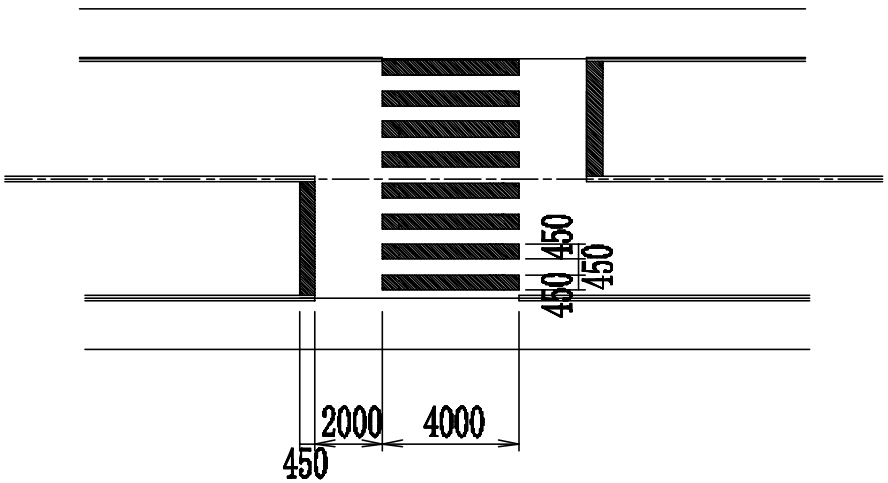

Guard Post (Draft)

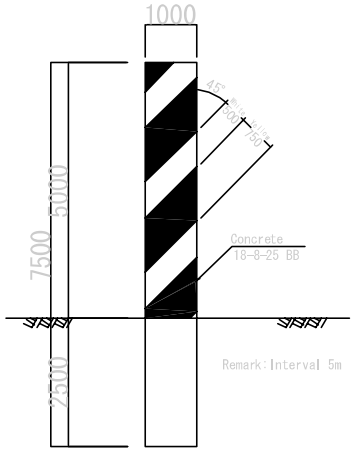

Side View

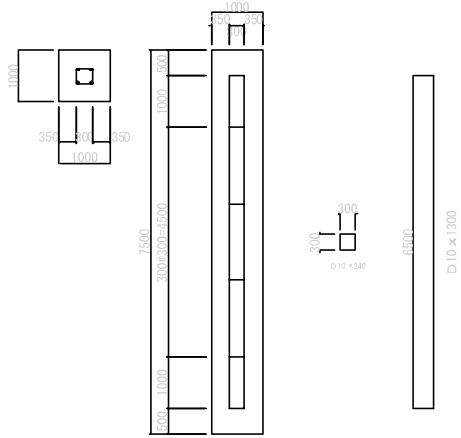

Bar Arrangement

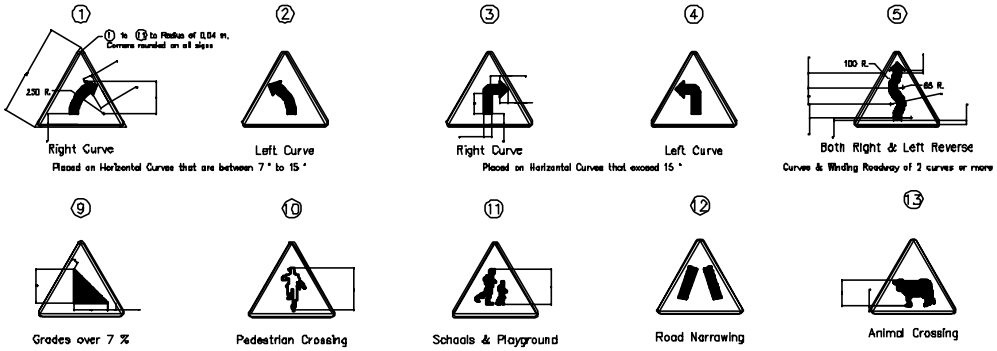

GENERAL NOTES

ETHIOPIA ROAD AUTHORITY THE FEDERAL DEMOCRATIC REPUBLIC OF ETHIOPIA	THE PROJECT FOR REHABILITATION OF TRUNK ROAD PHASE IX IN THE FEDERAL DEMOCRATIC REPUBLIC OF ETHIOPIA	ORIENTAL CONSULTANTS CO.,LTD IN ASSOCIATION WITH JAPAN ENGINEERING CONSULTANTS CO.,LTD	Traffic Sign Post and Kilometer Post	SCALE 5=1:100	ETHIOPIA ROAD AUTHORITY THE FEDERAL DEMOCRATIC REPUBLIC OF ETHIOPIA	DESIGN DATE 04. 05. ##	ORIENTAL CONSULTANTS CO.,LTD IN ASSOCIATION WITH JAPAN ENGINEERING CONSULTANTS CO.,LTD	REVIEW DATE 04. 05. ##	DATE May 2004	SHEET NO 32

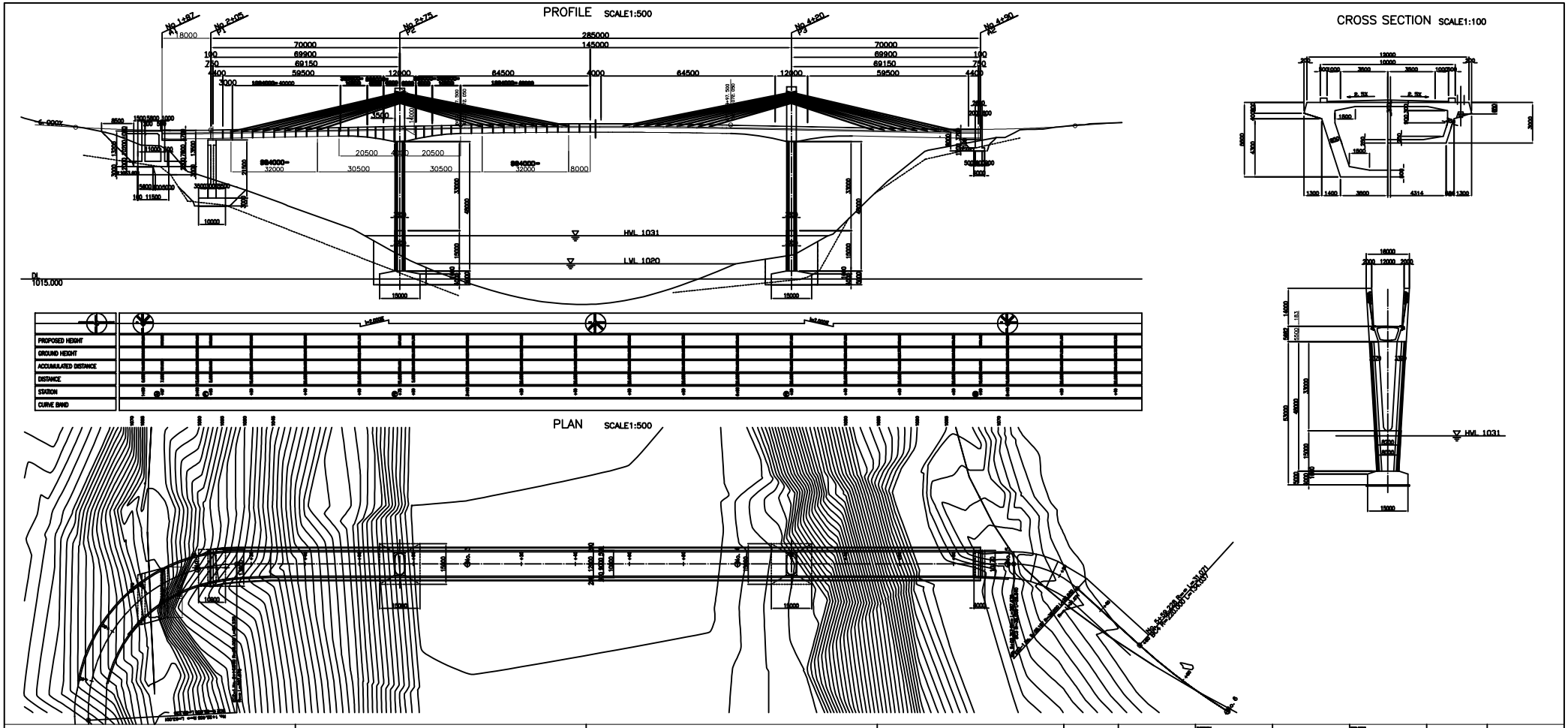

ETHIOPIA ROAD AUTHORITY THE FEDERAL DEMOCRATIC REPUBLIC OF ETHIOPIA	THE PROJECT FOR REHABILITATION OF TRUNK ROAD PHASE III IN THE FEDERAL DEMOCRATIC REPUBLIC OF ETHIOPIA	ORIENTAL CONSULTANTS CO.,LTD IN ASSOCIATION WITH JAPAN ENGINEERING CONSULTANTS CO.,LTD	GENERAL BRIDGE PLAN	SCALE H=1:500 V=1:100	ETHIOPIA ROAD AUTHORITY THE FEDERAL DEMOCRATIC REPUBLIC OF ETHIOPIA	DESIGN DATE 04.05.##	ORIENTAL CONSULTANTS CO.,LTD IN ASSOCIATION WITH JAPAN ENGINEERING CONSULTANTS CO.,LTD	REVIEW DATE 04.05.##	DATE May 2004	SHEET NO 33

SIDE ELEVATION S=1/100

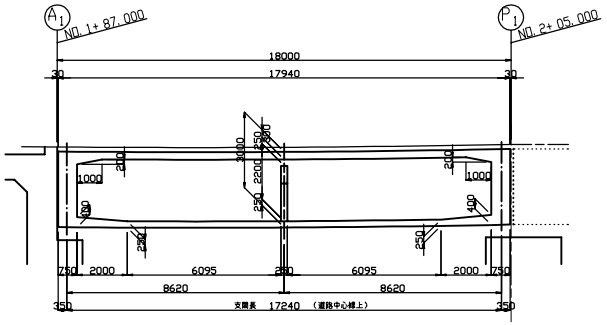

TYPICAL SECTION S=1/50

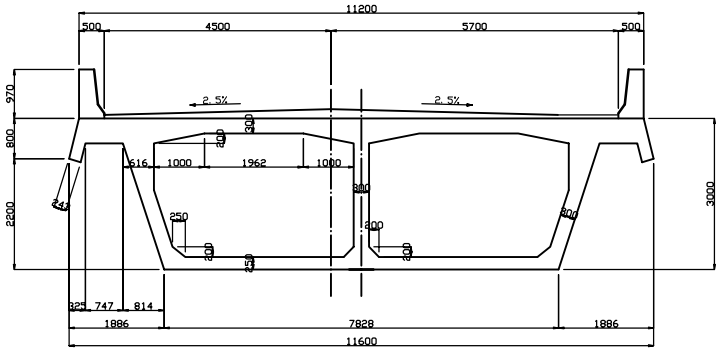

PLAN S=1/100

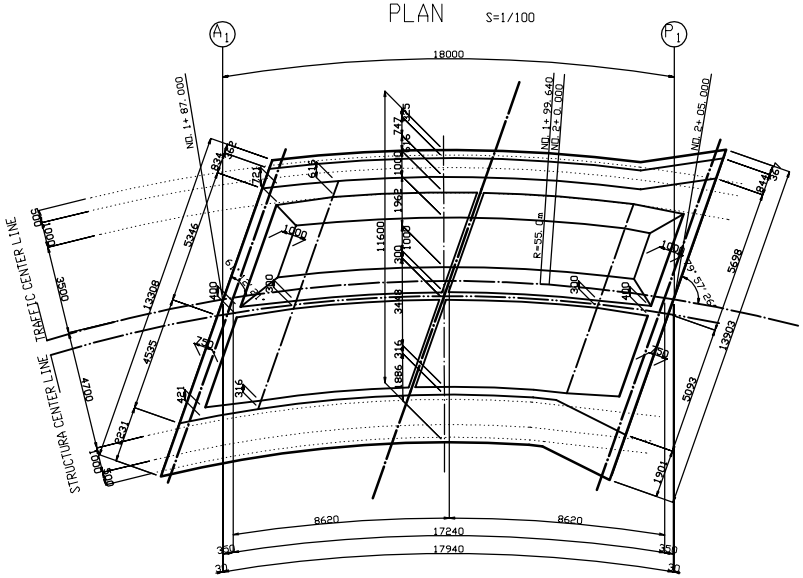

TYPICAL SECTION AT ABUTMENT A1 S=1/50

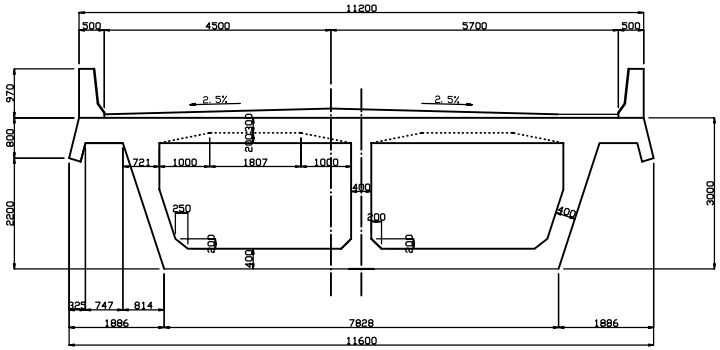

ETHIOPIA ROAD AUTHORITY THE FEDERAL DEMOCRATIC REPUBLIC OF ETHIOPIA	THE PROJECT FOR REHABILITATION OF TRUNK ROAD PHASE III IN THE FEDERAL DEMOCRATIC REPUBLIC OF ETHIOPIA	ORIENTAL CONSULTANTS CO.,LTD IN ASSOCIATION WITH JAPAN ENGINEERING CONSULTANTS CO.,LTD	APROACH VIADUCT PLAN ELEVATION AND SECTION	SCALE S=1:100 S=1:50	ETHIOPIA ROAD AUTHORITY THE FEDERAL DEMOCRATIC REPUBLIC OF ETHIOPIA	DESIGN DATE 04.05.##	ORIENTAL CONSULTANTS CO.,LTD IN ASSOCIATION WITH JAPAN ENGINEERING CONSULTANTS CO.,LTD	REVIEW DATE 04.05.##	DATE May 2004	SHEET NO 34

FRONT ELEVATION
1–1

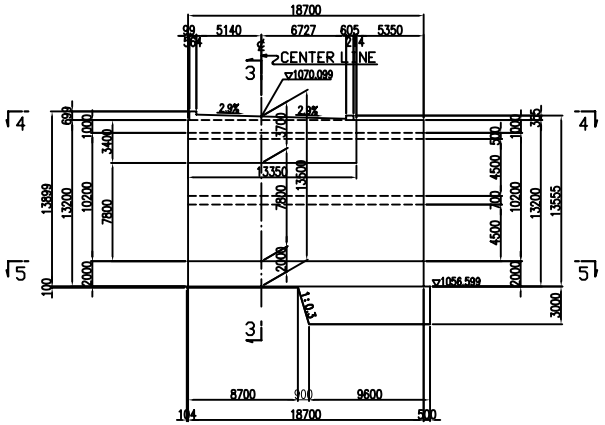

REAR ELEVATION
2–2

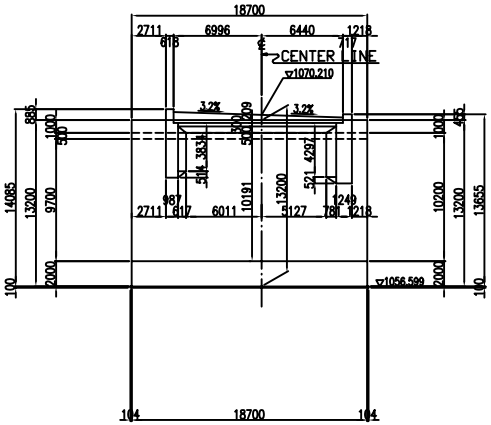

SECTION
3–3

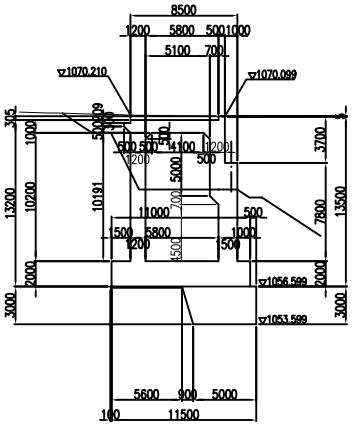

PLAN
4–4

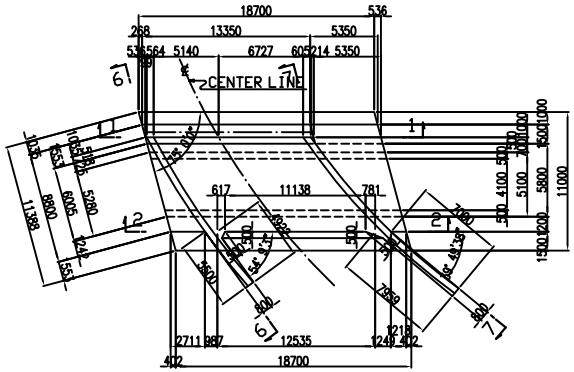

SIDE ELEVATION
6–6

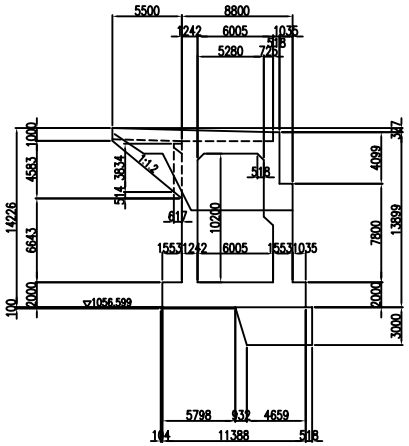

SIDE ELEVATION
7–7

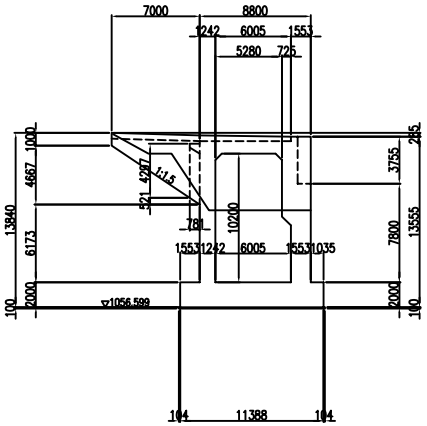

BACE PLAN
5–5

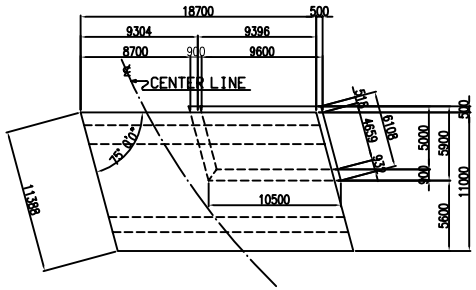

ETHIOPIA ROAD AUTHORITY THE FEDERAL DEMOCRATIC REPUBLIC OF ETHIOPIA	THE PROJECT FOR REHABILITATION OF TRUNK ROAD PHASE III IN THE FEDERAL DEMOCRATIC REPUBLIC OF ETHIOPIA	ORIENTAL CONSULTANTS CO.,LTD IN ASSOCIATION WITH JAPAN ENGINEERING CONSULTANTS CO.,LTD	ABUTMENT A1 PLAN ELEVATION AND SECTION	SCALE S=1:200	ETHIOPIA ROAD AUTHORITY THE FEDERAL DEMOCRATIC REPUBLIC OF ETHIOPIA	DESIGN DATE 04.05.##	ORIENTAL CONSULTANTS CO.,LTD IN ASSOCIATION WITH JAPAN ENGINEERING CONSULTANTS CO.,LTD	REVIEW DATE 04.05.##	DATE May 2004	SHEET NO 35

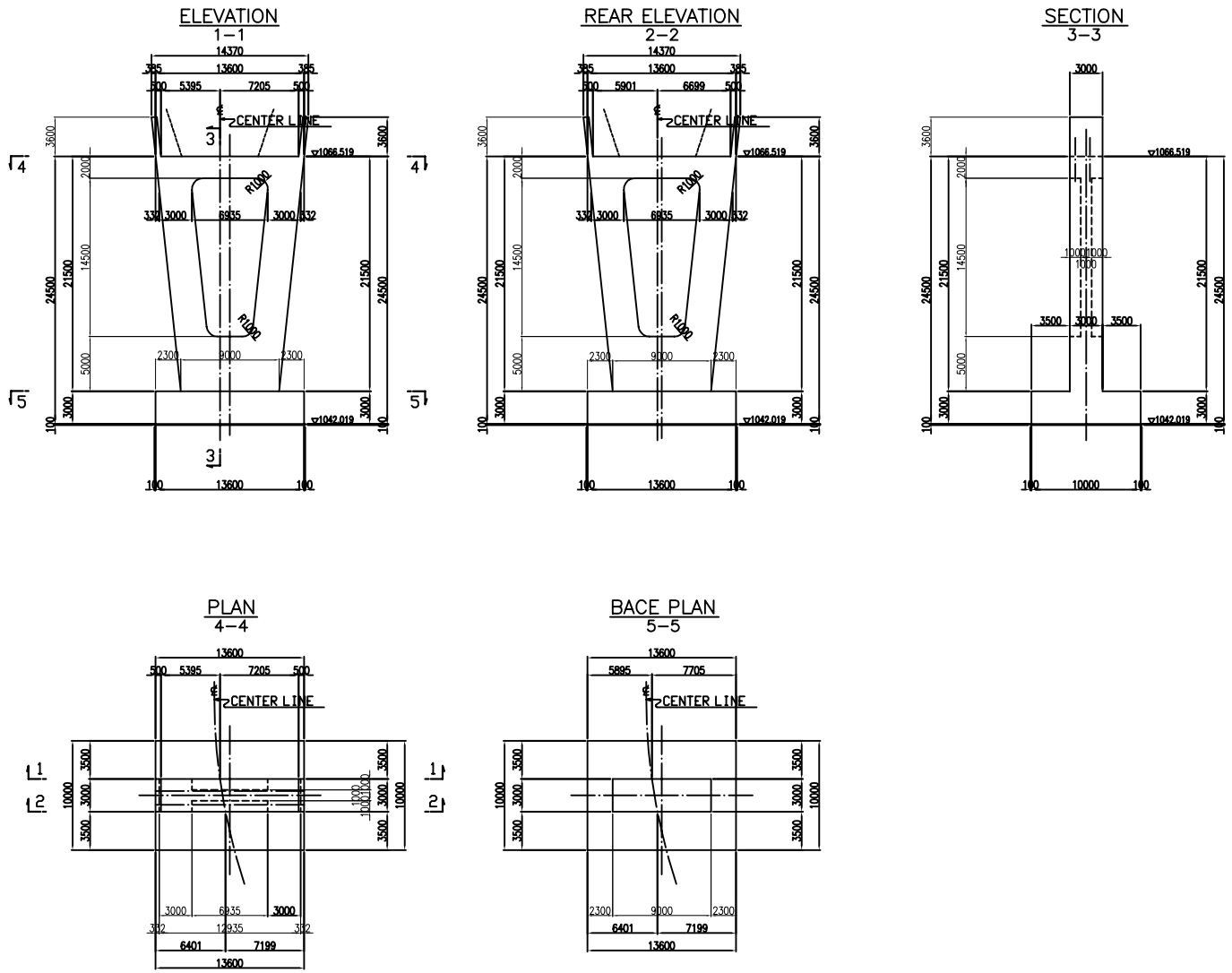

ETHIOPIA ROAD AUTHORITY THE FEDERAL DEMOCRATIC REPUBLIC OF ETHIOPIA	THE PROJECT FOR REHABILITATION OF TRUNK ROAD PHASE III IN THE FEDERAL DEMOCRATIC REPUBLIC OF ETHIOPIA	ORIENTAL CONSULTANTS CO.,LTD IN ASSOCIATION WITH JAPAN ENGINEERING CONSULTANTS CO.,LTD	PIER P1 PLAN ELEVATION AND SECTION	SCALE S=1:200	ETHIOPIA ROAD AUTHORITY THE FEDERAL DEMOCRATIC REPUBLIC OF ETHIOPIA	DESIGN DATE 04.05.##	ORIENTAL CONSULTANTS CO.,LTD IN ASSOCIATION WITH JAPAN ENGINEERING CONSULTANTS CO.,LTD	REVIEW DATE 04.05.##	DATE May 2004	SHEET NO 36

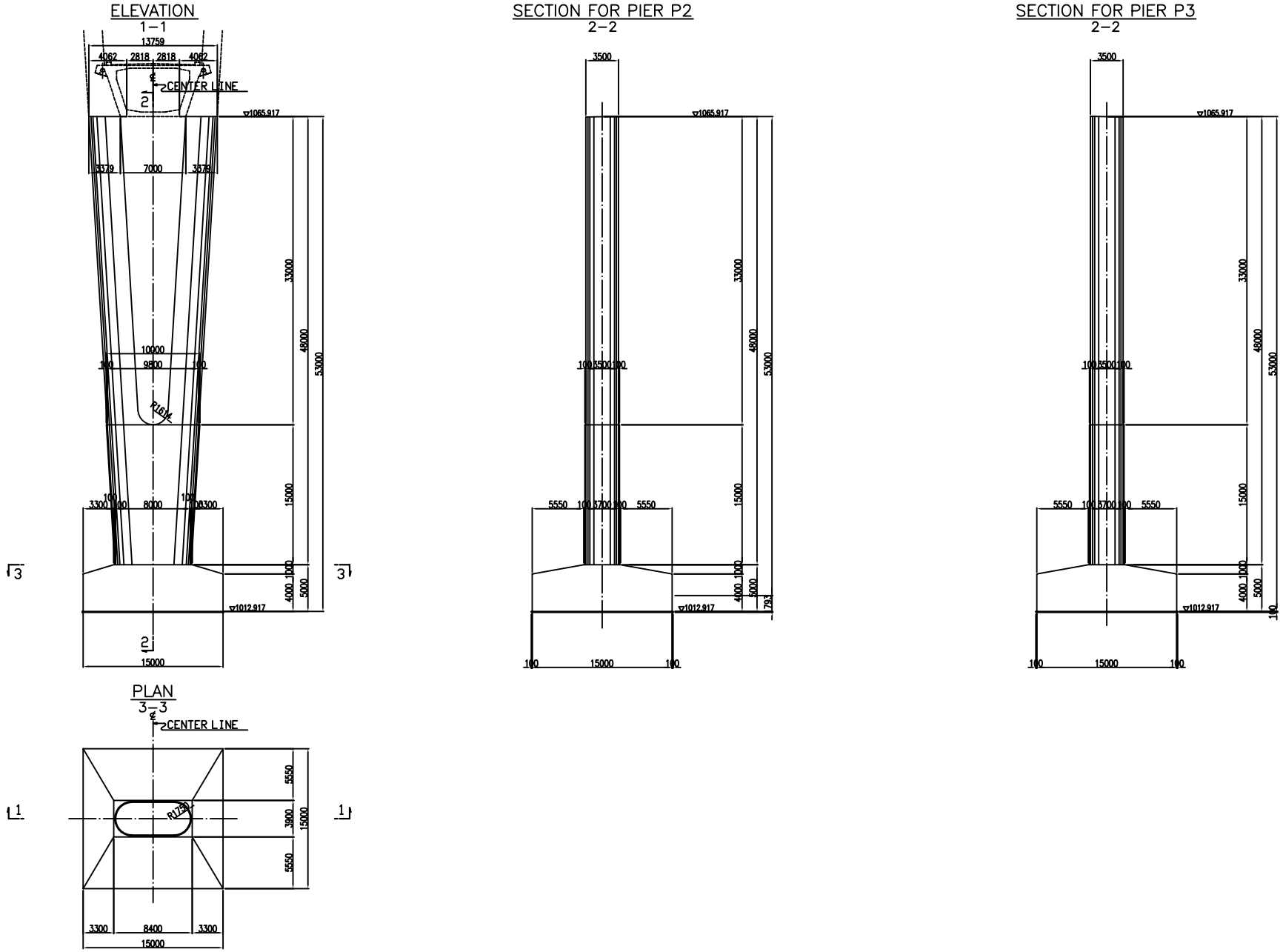

ETHIOPIA ROAD AUTHORITY THE FEDERAL DEMOCRATIC REPUBLIC OF ETHIOPIA	THE PROJECT FOR REHABILITATION OF TRUNK ROAD PHASE III IN THE FEDERAL DEMOCRATIC REPUBLIC OF ETHIOPIA	ORIENTAL CONSULTANTS CO.,LTD IN ASSOCIATION WITH JAPAN ENGINEERING CONSULTANTS CO.,LTD	PIER P2 AND PIER P3 PLAN ELEVATION AND SECTION	SCALE S=1:200	ETHIOPIA ROAD AUTHORITY THE FEDERAL DEMOCRATIC REPUBLIC OF ETHIOPIA	DESIGN DATE 04.05.##	ORIENTAL CONSULTANTS CO.,LTD IN ASSOCIATION WITH JAPAN ENGINEERING CONSULTANTS CO.,LTD	REVIEW DATE 04.05.##	DATE May 2004	SHEET NO 37

FRONT ELEVATION
1–1

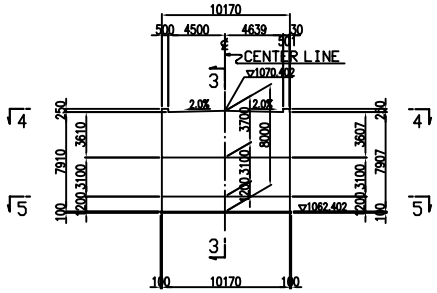

REAR ELEVATION
2–2

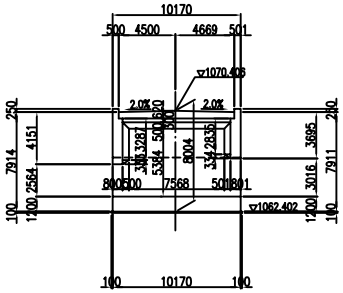

SECTION
3–3

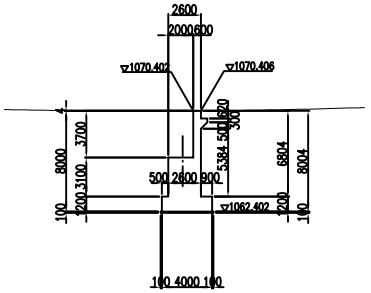

PLAN
4–4

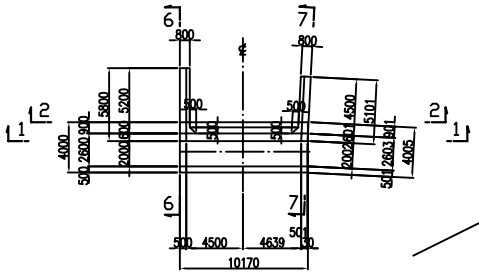

SIDE ELEVATION
6–6

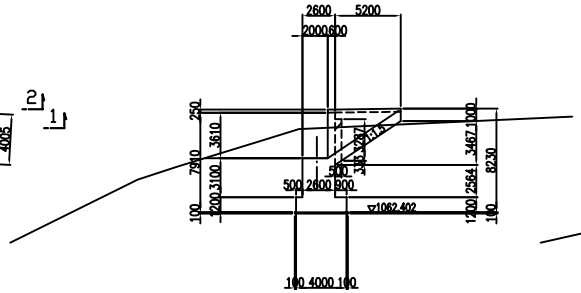

SIDE ELEVATION
7–7

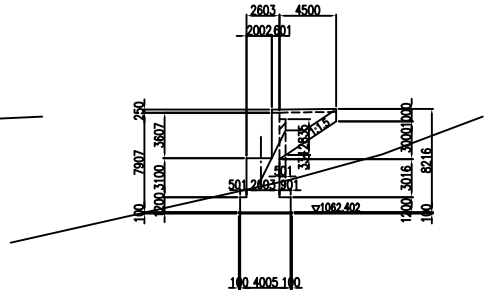

BACE PLAN
5–5

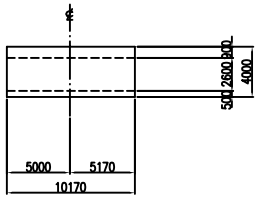

ETHIOPIA ROAD AUTHORITY THE FEDERAL DEMOCRATIC REPUBLIC OF ETHIOPIA	THE PROJECT FOR REHABILITATION OF TRUNK ROAD PHASE III IN THE FEDERAL DEMOCRATIC REPUBLIC OF ETHIOPIA	ORIENTAL CONSULTANTS CO.,LTD IN ASSOCIATION WITH JAPAN ENGINEERING CONSULTANTS CO.,LTD	ABUTMENT A2 PLAN ELEVATION AND SECTION	SCALE S=1:200	ETHIOPIA ROAD AUTHORITY THE FEDERAL DEMOCRATIC REPUBLIC OF ETHIOPIA	DESIGN DATE 04.05.##	ORIENTAL CONSULTANTS CO.,LTD IN ASSOCIATION WITH JAPAN ENGINEERING CONSULTANTS CO.,LTD	REVIEW DATE 04.05.##	DATE May 2004	SHEET NO 38

PROFILE SCALE1:200

P2 PIER

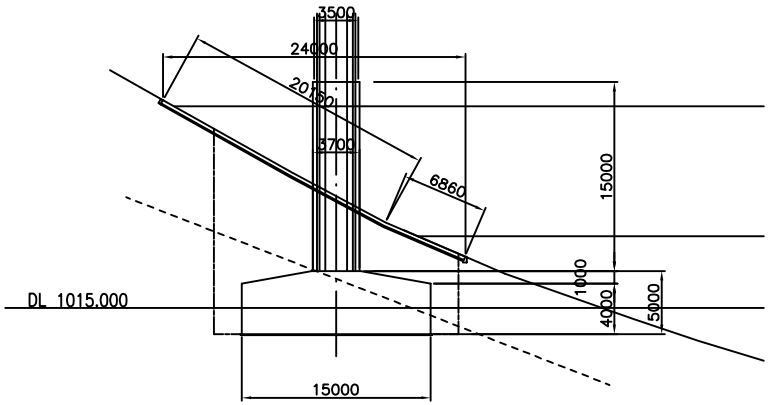

P3 PIER

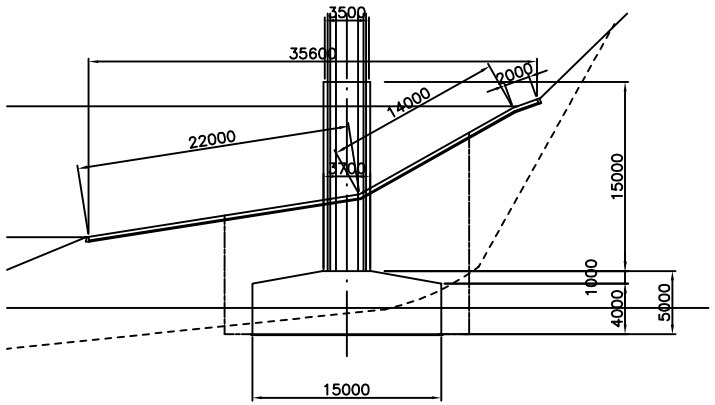

BASE CONCRETE

SCALE1:50

P2

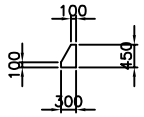

P3

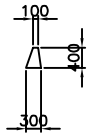

CROSS SECTION

SCALE1:50

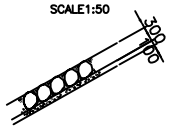

PLAN SCALE1:500

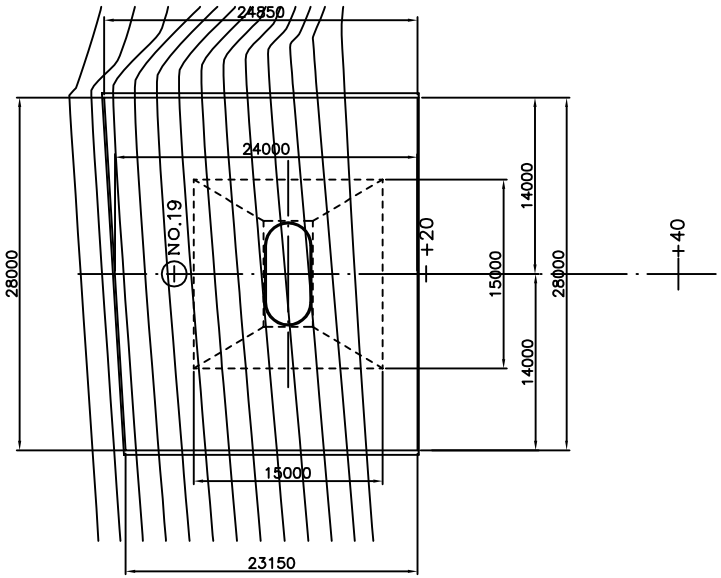

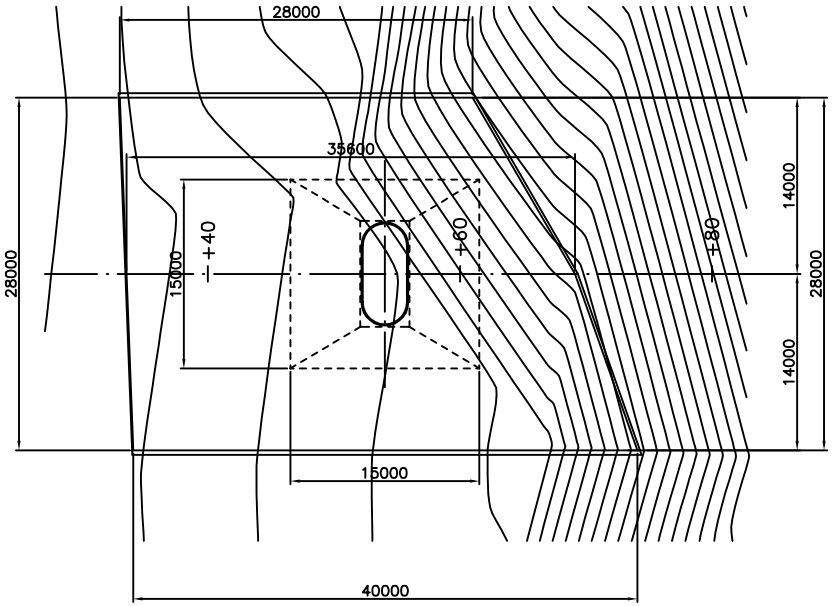

ETHIOPIA ROAD AUTHORITY THE FEDERAL DEMOCRATIC REPUBLIC OF ETHIOPIA	THE PROJECT FOR REHABILITATION OF TRUNK ROAD PHASE III IN THE FEDERAL DEMOCRATIC REPUBLIC OF ETHIOPIA	ORIENTAL CONSULTANTS CO.,LTD IN ASSOCIATION WITH JAPAN ENGINEERING CONSULTANTS CO.,LTD	Revetment Drawing for P2 and P3 Piers	SCALE H=1:200,000 V=1:500,000 S=1:50,000	ETHIOPIA ROAD AUTHORITY THE FEDERAL DEMOCRATIC REPUBLIC OF ETHIOPIA	DESIGN DATE 04.05.##	ORIENTAL CONSULTANTS CO.,LTD IN ASSOCIATION WITH JAPAN ENGINEERING CONSULTANTS CO.,LTD	REVIEW DATE 04.05.##	DATE May 2004	SHEET NO 39