# APPENDIX-11

# WASTEWATER TREATMENT PLANTS AND PUMPING STATIONS

# Contents



**Figures:**

# A11.1 INTRODUCTION

In this appendix, the design concepts and design calculations of the wastewater treatment facilities and pumping stations are shown. The designs of these facilities are separately explained in Section A11.2 Pumping Stations and Screens (Matadero Pumping Station, Caballeria Screen Facility, Casablanca Pumping Station, Repumping Station) and Section A11.3 New Waste Water Treatment System (Luyanó WWTP, Tadeo WWTP, Guanabacoa WWTP, La Cumbre WWTP). All the designs are outline designs, which aim at approximate calculations of the sizes, required areas and costs of the facilities. Therefore, when more detailed design work will be carried out in the next step of the project, the baseline data will need to be reaffirmed.

# A11.2 PUMPING STATIONS AND SCREENS

## A11.2.1 MATADERO PUMPING STATION

The layout and profile of Matadero Pumping Station are shown in Figure A11.1. The design calculation of Matadero Pumping Station and the list of its equipment are shown in the following.

Matadero Pumping Station will need to cope with three different inflow conditions which occur 1) during and 2) after the rehabilitation of Colector Sur, and 3) in case Luyanó Left Colector (Area A) is connected to Matadero Pumping Station (an alternative plan of the Master Plan that need to be reviewed after the first stage of the project implementation). Therefore this pumping station is designed to deal with these different flow rates. The maximum hourly flow and required numbers of screens, grit chambers and pumps for the operation in each condition are shown in the following table.

The number of pumps in Matadero Pumping Station will be up to five. During the rehabilitation of Colector Sur, three pumps will be installed as temporary ones. Therefore any standby pump will not be instilled during the rehabilitation. The numbers of screens and grit chambers to be constructed are designed based on the flow rate in the third condition which includes the wastewater discharged form Area A. However, the numbers of screens and grit chambers to be operated vary depending on the flow in each condition.

**Required Numbers of Screens, Grit Chambers and Pumps for Operation**

| | Unit | During the Rehabilitation | After the Rehabilitation | Including Area A |
|---|---|---|---|---|
| Q maximum hourly flow | $m^3$/sec | 2.283 | 0.676 | 1.271 |
| | $m^3$/min | 137.0 | 40.6 | 76.3 |
| Coarse Screen | number | 3 | 2 | 3 |
| Fine Screen | number | 3 | 2 | 3 |
| Grit Chamber | number | 3 | 2 | 3 |
| Pumping Equipment | | | | |
| Pump No.1 (20$m^3$/min) | number | 3 | 3 (1) | 2 |
| Pump No.2 (40$m^3$/min) | number | 2 | - | 2 (1) |

Note ; (1) means that one standby pump is included

## (1) Design Calculations

### 1) Pump Capacities and the Numbers of Pump Units

The operation of the pumps is planned in view of different flow rates of influent as shown in the following tables.

| | Capacity $m^3$/min | During the Rehabilitation Number | After the Rehabilitation Number | Including Area A Number |
|---|---|---|---|---|
| Pump No.1 | 20 | 3 | 3 (1) | 2 |
| Pump No.2 | 40 | 2 | - | 2 (1) |
| Total Capacity | | 140 | 40 | 80 |

Note; ( ) standby

a. Pump Operation Plan during the Rehabilitation

| | Design Flow | | Capacity | Number of Pump Units | |
|---|---|---|---|---|---|
| | $m^3$/sec | $m^3$/min | $m^3$/min | Pump No.1 | Pump No.2 |
| Q average daily flow | 1.473 | 88.38 | 100 | 3 | 1 |
| Q maximum daily flow | 1.738 | 104.28 | 100 | 3 | 1 |
| Q maximum hourly flow | 2.283 | 136.98 | 140 | 3 | 2 |

b. Pump Operation Plan in the case including Area A

| | Design Flow | | Capacity | Number of Pump Units | |
|---|---|---|---|---|---|
| | $m^3$/sec | $m^3$/min | $m^3$/min | Pump No.1 | Pump No.2 |
| Q average daily flow | 0.797 | 47.82 | 40 | 2 | 0 |
| Q maximum daily flow | 0.949 | 56.94 | 60 | 1 | 1 |
| Q maximum hourly flow | 1.271 | 76.26 | 80 | 2 | 1 |

c. Pump Operation Plan after the Rehabilitation (not including Area A)

| | Design Flow | | Capacity | Number of Pump Units | |
|---|---|---|---|---|---|
| | $m^3$/sec | $m^3$/min | $m^3$/min | Pump No.1 | Pump No.2 |
| Q average daily flow | 0.346 | 20.76 | 20 | 1 | 0 |
| Q maximum daily flow | 0.408 | 24.48 | 40 | 2 | 0 |
| Q maximum hourly flow | 0.676 | 40.56 | 40 | 2 | 0 |

### 2) Conditions of the Incoming and Discharge Sewers

| | | | |
|---|---|---|---|
| Size of the incoming sewer | | 1,500 | mm |
| Bottom level of the incoming sew | | -5.55 | M |
| Pressure Pipe | Bottom level | 1.65 | M |
| | Diameter | 1,350 | mm |
| | Length | 1,020 | m |
| Gravity Flow Pipe | | | |
| | Bottom level | -2.10 | M |
| | Diameter | 1,500 | mm |

### 3) Pump Diameter

**Pump No.1**

$D = 146\sqrt{(Q/v)}$

$= 146\sqrt{(20/2.5)} = 413.0 \rightarrow 400$

0.4

where D ：Diameter(mm)

Q ：Pump Cpacity ($m^3$/min)

v ：Velocity(m/sec) 2.5 m/sec

**Pump No.2**

$D = 146\sqrt{(Q/v)}$

$= 146\sqrt{(40/2.5)} = 584.0 \rightarrow 600$

0.6

### 4) Water Head

a. Suction water level = -5.55 M

b. Pressure Pipe Pipe Bottom level 1.650 M

Discharge water level = Pipe Bottom level + Diamet

= 1.650 + 1.35

= 3.000 M

c. Actual Head；H

H = 3.000 - -5.550

= 8.55 m

d. Total head loss by pump equipment

Pump No.1

V= q /A/60 = 2.654 m/sec

A = $1/4 \times \pi \times D^2$ 0.126 $m^2$

Loss coefficients △H1

| | |
|---|---|
| Inlet | 0.10 |
| Sluice valve | 0.15 |
| Check valve | 1.20 |
| Outlet | 1.00 |
| Bend | 0.28 |
| Friction loss 0.047 x L/D= | 1.18 |
| Sum | 3.91 |

△H1 = 3.91 $\times v^2/2g$ Assumed Pipe Length= 10 m
= 1.40 m D= 0.4 m

Pump No.2

V= 2.359 m/sec
A = 0.283 $m^2$

Loss coefficients △H1

| | |
|---|---|
| Inlet | 0.10 |
| Sluice valve | 0.15 |
| Check valve | 1.20 |
| Outlet | 1.00 |
| Bend | 0.28 |
| Friction loss 0.047 x L/D= | 0.78 |
| Sum | 3.51 |

△H1 = 3.51 $\times v^2/2g$ Assumed Pipe Length= 10 m
= 1.00 m D= 0.6 m

e. Pressure Water Head Loss

Length of the Pressure Pipe L = 1,020 m D= 1.35 m

| | During the Rehabilitation | Including Area A | After the Rehabiliation |
|---|---|---|---|
| Q ($m^3$/min) | 140 | 80 | 40 |
| V = Q /A/60 ('m/sec) | 1.63 | 0.93 | 0.47 |
| A = 1/4×π×D ($m^2$ ) | 1.431 | 1.431 | 1.431 |
| △H2 = 6.82× (L/$D^{1.17}$)×(V/CS) $^{1.85}$ | | | |
| (m) | 2.02 | 0.72 | 0.20 |

f. Total Water Head Required

> During the Rehabilitatiion

Unit：m

| Pump | H | △H1 | △H2 | Total Head | |
|---|---|---|---|---|---|
| No.1 | 8.55 | 1.40 | 2.02 | 11.98 | →12.0 |
| No.2 | 8.55 | 1.00 | 2.02 | 11.57 | →12.0 |

> Including Area A

Unit：m

| Pump | H | △H1 | △H2 | Total Head | |
|---|---|---|---|---|---|
| No.1 | 8.55 | 1.40 | 0.72 | 10.67 | →12.0 |
| No.2 | 8.55 | 1.00 | 0.72 | 10.27 | →12.0 |

> After the Rehabilitation (Except for Area A)

Unit：m

| Pump | H | △H1 | △H2 | Total Head | |
|---|---|---|---|---|---|
| No.1 | 8.55 | 1.40 | 0.20 | 10.15 | →12.0 |

## 5) Pump Equipment

| Pump specifications | | No.1 | No.2 |
|---|---|---|---|
| | | Submerged Pump | |
| Diameter (mm) | | 400 | 600 |
| Capacity ($m^3$/min) | | 20 | 40 |
| Total Dynamic Head (m) | | 12.0 | 12.0 |
| Motor Output (kw) | | 75 | 120 |
| Number of Pump Units | During the Rehabilitati | 3 | 2 |
| | Including Area A | 5(1) | 0 |
| | After Rehabilitation | 3(1) | 0 |

**Pump No.1**

Shaft power

Shaft power of mixed flow contrifugal pumps

$$L = \frac{k \cdot \gamma \cdot Q \cdot H}{\eta}$$

where
- L : Shaft power of a pump
- k : kw 0.163
- Q : Discharge ($m^3$/min) 20
- H : Total dynamic head(m) 12.0
- γ : Specfic gravity of water 1
- η : Pump efficiency 0.76

= 51.47 kw

Outputs of pump drivers

$$P = L(1+\alpha)/\eta$$

where
- P : Pump power (kw)
- L : Pump shaft power (kw) 51.47
- α : Allowance for motor 0.15 for electric
- η : Transmission efficiency 1.0 for direct connection

= 59.2 → 75 kw

**Pump No.2**

Shaft power

Shaft power of mixed flow contrifugal pumps

$$L = \frac{k \cdot \gamma \cdot Q \cdot H}{\eta}$$

where

L : Shaft power of pump
k : kw 0.163
Q : Pump discharge ($m^3$/min) 40
H : Pump total dynamic head(m) 12.0
γ : Specfic gravity of water 1
η : Pump efficiency 0.79

= 99.04 kw

Outputs of pump drivers

P = L (1+α) /η

where

P : Pump power (kw)
L : Pump shaft power (kw) 99.04
α : Allowance for motor 0.15 for electric
η : Transmission efficiency 1.0 for direct connection

= 113.9 → 120 kw

## (2) List of Mechanical Equipment

### 1) Screen System Equipment

| No. | Equipment | Type | Size and Specifications | Qt'y | Output kW/unit | Total out-put(kW) |
|---|---|---|---|---|---|---|
| 1 | Screen channel influent gates | Cast iron made, manually operated sluice gate | 1,500W x 1,500H | 3 | – | – |
| 2 | Coarse screens | Manually screened (removable type) | Clear opening 100 mm 1.4mW x1.0mH x 60° | 3 | – | – |
| 3 | Fine screens | Mechanically-cleaned, (intermittently operated) | Clear opening 20 mm 1.4mW x 1.0mH x 75° | 3 | 0.75 | 2.25 |
| 4 | Grit collector | with bucket conveyor | 1.7mW x 12.0mL | 3 | 1 | 3 |
| 5 | Grit chamber effluent gates | Cast iron made, manually operated sluice gate | 700W x 700H | 3 | – | – |
| 6 | Screenings conveyors | Trough belt conveyor | | 2 | 1.5 | 3 |
| 7 | Screenings skip hoist | Wire rope operated | | 1 | 2.2 | 2.2 |
| 8 | Screenings hopper | Steel made, motor operated | | 1 | 1.5 | 1.5 |
| 9 | Screening hoist | Motor operated hoist with trolley | | 1 | 2.6 | 2.6 |
| 10 | Gritting conveyors | Trough belt conveyor | | 3 | 1.5 | 4.5 |
| 11 | Gritting skip hoist | Wire rope operated | | 1 | 2.2 | 2.2 |
| 12 | Screenings hopper | Steel made, motor operated | | 1 | 1.5 | 1.5 |
| 13 | Screening hoist | Motor operated hoist with trolley | | 1 | 2.6 | 2.6 |
| Total motor outputs of (1) | | | | | | 25.4 |

**2) Pumping Equipment**

| No. | Equipment | Type | Size and Specifications | Qt'y | Output kW/unit | Total out-put(kW) |
|---|---|---|---|---|---|---|
| 1 | No.1 Pumps | Submersible pump | 400mmΦ x20m$^3$/min. x 12m | 3 | 75 | 225 |
| 2 | Check valves | Slow-closing check valve | | 3 | – | – |
| 3 | Discharge valves | Motor-operated butterfly valve | | 3 | 0.2 | 0.6 |
| 4 | No.2 Pumps | Submersible pump | 600mmF x 40m$^3$/min. x12m | 2 | 120 | 240 |
| 5 | Check valves | Slow-closing check valve | | 2 | – | – |
| 6 | Discharge valves | Motor-operated butterfly valve | | 2 | 0.2 | 0.4 |
| 7 | Crane for pumps | Manually-operated crane with chain block | | 1 | – | – |
| 8 | Flow measurement equipment | Electro-magnetic flow meter | | 1 | – | |
| 9 | Generator Equipment | | 700KVA | 1 | – | – |
| Total motor outputs of (2) | | | | | | 466.0 |
| Grand Total of Motor Outputs | | | | | | 491.4 |

## A11.2.2 CABALLERIA SCREEN FACILITY

The Layout of Caballeria Screen Facility is shown in Figure A11.2. The equipment list of Caballeria Screen Facility is shown in the following table.

| No. | Equipment | Type | Size and Specifications | Quantity | Output kW/unit | Total out-put(kW) | Remarks |
|---|---|---|---|---|---|---|---|
| 1 | Coarse screen | Cleaned manually (removable type) | Clear opening 100 mm | 1 | – | | Existing |
| 2 | Screen | Cleaned mechanically (intermittently operated) | Clear opening 50 mm | 3 | 0.75 | 2.25 | One unit Existing |
| 3 | Effluent gate of a grit chamber | Steel plate manually operated | 1200W x 1200H | 1 | – | | Existing |
| 4 | Bypath gate | Steel plate manually operated | 1200W x 1200H | 1 | – | | |
| 5 | Air lift pump | | 150F x 1.0m$^3$/min | 6 | – | | |
| 6 | Blower | Root type | 65mm×3.2m$^3$/min | 2 (1) | 5.5 | 5.5 | Standby excluded |
| **Ground Total of Motor Output** | | | | | | 7.75 | kw |

## A11.2.3 CASABLANCA PUMPING STATION

Figure A11.3 and Figure A11.4 show the layout and profile of Casablanca Pumping Station that are designed for its rehabilitation. The equipment list of Casablanca Pumping Station is shown in the following table.

| No. | Equipment | Type | Size and Specifications | Qt'y | Output kW/unit | Total out-put(kW) | Remarks |
|---|---|---|---|---|---|---|---|
| 1 | Influent gates | Cast iron made, manually operated sluice gate | 1200W x 1200H | 4 | – | – | |
| 2 | Pump | Submersible pump | 900mmF x 1.75m$^3$/min. 200kw x 60Hz | 4 (1) | 200 | 600 | Standby excluded |
| 3 | Check valves | Slow-closing check valve | 900F | 4 (1) | – | | Standby excluded |
| 4 | Water level gage | Immension type | | 2 | – | – | |
| 5 | Flow measurement equipment | Ultra-sonic type | | 1 | – | – | Settled in tunnel |
| 6 | Flower drain pumps | Submersible pump | 65Φ x 0.3m$^3$/min | 2 (1) | 1.5 | 1.5 | Standby excluded |
| 13 | Generator | Diesel engine type | 1500KVA | 1 | | | |
| **Ground Total of Motor Output** | | | | | | 601.5 | kw |

## A11.2.4 REPUMPING STATION

The water head loss occurred for the discharge of effluent into the open see will increase after the renewal f the outfall sewer. Therefore a pumping station is necessary after the tunnel to pump up again and discharge the effluent into the open sea through the outfall sewer. This Repumping Station is planned along with sedimentation basins and sludge treatment facilities in case the sedimentation treatment of the effluent will be required in the future. Supposed that the sedimentation and sludge treatment facilities are constructed in the same site as the repumping station, the layout of those facilities are shown in Figure A11.5.

The outlines of the repumping station, sedimentation and sludge treatment facilities are shown in the following tables.

**(1) Outline of the Repumping Station**

| 1.Design Flow: | | | |
|---|---|---|---|
| Q hourly maximum flow | 5.2m$^3$/sec | Same as Casablanca Pumping Station | |
| 2.Main Facilities | | | |
| **Facility** | **Quantity** | **Size, Capacity, Specification** | **Remark** |
| 1.Influent gate | 3 Units | Cast iron made, manually Operated | |
| 2.Fine screen | 3 Units | Openings of 20mm Cleaned mechanically (Intermittently operated) | |
| 3.Submersible pump | 4 (1) Units | 900mmF x 1.75m$^3$/min. x 8m | Same as Casablanca Pumping Station |
| 4.Generator | 1 Unit | Diesel engine type 1500KVA | |

**(2) Outline of sedimentation and sludge treatment facilities**

**1) Design Flow**

| | |
|---|---|
| Q daily maximum flow (Q d) | 272,000 $m^3$/day |
| Q hourly maximum flow (Q h) | 329,000 $m^3$/day |

**2) Wastewater Quality**

| Parameter | Raw Wastewater (mg/l) | Removal Efficiency (%) | Treated Wastewater (mg/l) | The Great Caribian |
|---|---|---|---|---|
| $BOD_5$ | 190 | 30-50 | 133-95 | ＜150 |
| SS | 190 | 40-60 | 114-76 | ＜150 |

**3) Main Facilities**

| **Facility** | **Quality** | **Size, Capacity, Specification** | **Remarks** |
|---|---|---|---|
| 1.Sedimentation tank | 8 Units | 12.0mWx 41.0mLx 3.0mH<br>69 $m^3/m^2$/day (: Qd)<br>84 $m^3/m^2$/day (: Qh) | Surface loading $70m^3/m^2$/day |
| 2.Mechanical dewatering<br>Belt filter press | 12 Units | Filter width :3m | Filter loading rate 140kg/m/hour<br>Daily operation time ;6hour/day<br>Working days /week ;5day |

Solid Production= Qd x SS x $10^{-6}$ x 0.4 (Removal rate)

= 272,000$m^3$/day x 190 x $10^{-6}$ x 0.4=20.7t/day

# A11.3 NEW WASTEWATER TREATMENT PLANTS

## A11.3.1 LUYANÒ WWTP

The layout and hydraulic profile of Luyanó WWTP are shown in Figures A11.6 and A11.7. The designs of the main facilities in Luyanó WWTP are shown in Figures A11.6 to 12. The design calculation and equipment lists of Luyanó WWTP are shown in the following tables.

### (1) Design Calculation

**1) Design Basis**

**a. Design Wastewater Inflow**

Unit :$m^3$/d

| | Total | | Collector | |
|---|---|---|---|---|
| | Design Inflow | Estimated Inflow | Luyano Martin Perez | Luyano Left Bank |
| Q average daily flow | 60,000 | 59,650 | 26,423 | 33,227 |
| Q maximum daily flow | 71,000 | 70,924 | 31,419 | 39,505 |
| Q maximum houry flow | 119,000 | 118,572 | 53,732 | 64,840 |

**b. Design Wastewater Quality**

| | mg/l |
|---|---|
| $BOD_5$ | 200 |
| TSS | 200 |

| Parameter | Removal Efficiency (%) | | | Wastewater Quality (mg/l) | | |
|---|---|---|---|---|---|---|
| | Primary Treatment | Secondary Treatment | Overall Removal Rate | Raw Wastewater | Primary Effluent | Secondary Effluent |
| $BOD_5$ | 30 | 86 | 90.2 | 200 | 140 | 19.6 |
| TSS | 40 | 84 | 90.4 | 200 | 120 | 19.2 |

**c.Flow Sheet**

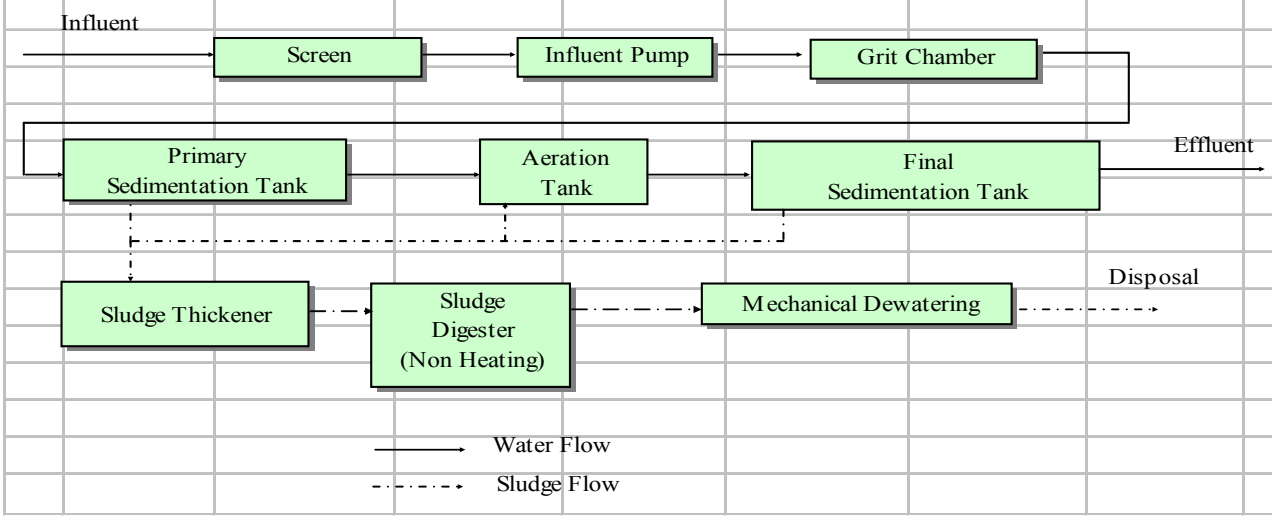

## 2) Sludge Volume

### a. Raw Sludge

Raw sludge production volume is calculated by the following equitation.

Solid Production Qd × TSS $\times 10^{-6}$ × 0.4

= 71,000 × 200 $\times 10^{-6}$ × 0.4 = 5.68

Assumed sludge concentration is 3 %

Sludge Volume 5.68 / 3 × 100 = 189 $m^3$/day

### b. Excess Sludge

Solid Production Qd × ( 120 — 19.2 ) × $10^{-6}$ = 7.16 t/day

Assumed sludge concentration is 0.8 %

Sludge Volume 7.16 / 0.8 × 100 = 895 $m^3$/day

### c. Thickened Sludge

Thickened sludge production volume is calculated by the flowing equation

Sludge Solid 5.68 + 7.16 = 12.84 t/day

Raw Sludge Excess Sludge

Assumed sludge concentration is 1 %

Sludge Volume 12.84 / 1 × 100 = 1,284 $m^3$/day

Assumed sludge concentration is 3 %

Sludge Volume 12.84 / 3 × 100 = 428 $m^3$/day

### d. Digestioned Sludge

Input solids 12.84 t/day

Input sludge volume 428 $m^3$/day

Volatile solid contents of sludge 70 %

Solid destruction rate 50 %

Digested sludge solids = 12.84 × (1-0.7×0.5)

= 8.34 t/day

### e. Sludge Dewatered Mechanically

**(Digested Sludge)**

Assumed sludge concentration is 20 %

8.34 ＋ 0.083 ＝ 8.43 t/day

Sludge Volume = 8.43 / 20 × 100 = 42.14 $m^3$/day

Sludge Weight = 42.14 × 1 t/$m^3$ = 42.14 t/day

Polymer addition rate 1 %

8.34 × 0.01 = 0.083 t/day

### 3) Coarse Screen

Design Flow

| | Luyano Martin Perez Colector | | Luyano Left Bank Colector | |
|---|---|---|---|---|
| | m/sec | $m^3$/min | m/sec | $m^3$/min |
| Qhour | 0.622 | 37.3 | 0.751 | 45.1 |
| Inlet Pipe Bottom Level (M) | | -6.82 | | -1.00 |

| | | | |
|---|---|---|---|
| Channel Width | 1.2 | m | |
| Screen Openings | 100 | mm | |
| No. of Screens | 4 | unit | |
| Slope of Screens | 60 | degrees from horizontal | |
| Screen Bottom Level | -7.00 | M | Low stage (L,M,P,C) |
| | -1.20 | M | Hight Stage (L,L,B,C) |

**Grit Pit**

Grit pits are set up to subsidence gravel and sand of large size.
Grab buckets etc. are used to remove them from the grit pits.

| | | |
|---|---|---|
| Pit Width | 1.2 | m |
| Pit length | 1.2 | m |
| number | 4 | unit |

### 4) Fine Screen

| | | |
|---|---|---|
| Channel Width | 1.2 | m |
| Depth | 0.7 | m |
| Bar Screen Clear Opening | 20 | mm |
| Thickness of Screen Bar | 8 | mm |
| Slope of Screens | 75 | degrees from horizontal |
| Out Put | 1.5 | kw |
| No. of Screen Bar | 4 | units |

### 5) Influent Pumping Station

**a. Design Flow**

| | Luyano Martin Perez Colector | | Luyano Left Bank Colector | |
|---|---|---|---|---|
| | m/sec | $m^3$/min | m/sec | $m^3$/min |
| Q hour | 0.622 | 37.3 | 0.751 | 45.1 |

## b) Submerged Pump

### Luyano Martin Perez Colector (Lower water level)

> Design Flow

| | | |
|---|---|---|
| Q hour | 37.3 | $m^3$/min |

> Pump Capacity

**No.1**

| | | | |
|---|---|---|---|
| Pump Capacity | 19 | $m^3$/min | |
| Diameter | 450 | mm | $d=146(Q/v)^{0.5}$ |
| Total Dynamic Head | 17.0 | m | v = 2.0 |
| Motor Output | 90 | kw | |
| Number of Pumps | 2 | units | (1standby) |

**No.2**

| | | | |
|---|---|---|---|
| Pump Capacity | 9.5 | $m^3$/min | |
| Diameter | 300 | mm | $d=146(Q/v)^{0.5}$ |
| Total Dynamic Head | 17.0 | m | v = 2.0 |
| Motor Output | 45 | kw | |
| Number of Pumps | 2 | units | |

> Water Head

Suction water level: a) (Pipe Bottom level=) -7.00 M
Discharge water level: b) 9.00 M
Actual Water Head; H1 = b) - a) = 16.00 m
Total water head loss at pump equipment:

| | | | Pump No.1 | Pump No.2 |
|---|---|---|---|---|
| Pump Velocity | q/A/60= | m/sec | 1.992 | 2.241 |
| Area | $1/4 \times \pi \times D^2$= | $m^2$ | 0.159 | 0.071 |
| Diameter | | m | 0.450 | 0.300 |

Loss coefficients △H1

| | | Pump No.1 | Pump No.2 | Remark |
|---|---|---|---|---|
| Inlet | | 0.10 | 0.10 | |
| Sluice valve | | 0.15 | 0.15 | |
| Check valve | | 1.2 | 1.2 | |
| Outlet | | 1 | 1 | |
| Bend | | 0.28 | 0.28 | assumed |
| Friction loss | 0.047 x L/D= | 1.044 | 1.567 | L=10m |
| Sum | (S) | 3.77 | 4.30 | |

△H1 (S) x $V^2/2g$= 0.77 m 0.983 m

Total head required

| | Pump No.1 | | Pump No.2 | |
|---|---|---|---|---|
| H1 | 16.00 | m | 16.00 | m |
| △H1 | 0.77 | m | 0.98 | m |
| H1＋△H1 | 16.77 | m | 16.98 | m |

use → 17.0 m

Shaft power

**Pump No.1**

Shaft power of mixed flow contrifugal pumps

$$L = \frac{k \cdot \gamma \cdot Q \cdot H}{\eta}$$

where
- L : Shaft power of pump
- k : kw 0.163
- Q : Pump discharge ($m^3$/min) 19
- H : Pump total dynamic head(m) 17.0
- γ : Specfic gravity of water 1
- η : Pump efficiency 0.76

= 69.28 kw

Outputs of pump drivers

$$P = L(1+\alpha)/\eta$$

where
- P : Pump power (kw)
- L : Pump shaft power (kw) 69.28
- α : Allowance for motor 0.15 for electric
- η : Transmission efficiency 1.0 for direct connection

= 79.67 → 90 kw

**Pump No.2**

Shaft power of mixed flow contrifugal pumps

$$L = \frac{k \cdot \gamma \cdot Q \cdot H}{\eta}$$

where
- L : Shaft power of pump
- k : kw 0.163
- Q : Pump discharge ($m^3$/min) 9.5
- H : Pump total dynamic head(m) 17.0
- γ : Specfic gravity of water 1
- η : Pump efficiency 0.76

= 34.64 kw

Outputs of pump drivers

$P = L(1+\alpha)/\eta$

where

P : Pump power (kw)

L : Pump shaft power (kw) 34.64

α : Allowance for motor 0.15 for electric

η : Transmission efficiency 1.0 for direct connection

= 39.83 → 45 kw

**Luyano Left Bank Colector (Higher Water Level)**

> Design Flow

| | | |
|---|---|---|
| Q hour | 45.1 | $m^3$/min |

> Pump Capacity

**No.3**

| | | | |
|---|---|---|---|
| Pump Capacity | 23 | $m^3$/min | |
| Diameter | 450 | mm | $d=146(Q/v)^{0.5}$ |
| Total Dynamic Head | 11.0 | m | v = 2.5 |
| Motor Output | 55 | kw | |
| Number of Pumps | 2 | units | |

> Head

Suction water level: a) (Pipe Bottom level=) -1.20 M

Discharge water level: b) 9.00 M

Actual Head; H1 = b) - a)= 10.20 m

Total head loss at pump equipment:

| | | unit | Pump No.3 |
|---|---|---|---|
| Pump Velocity | q/A/60= | m/sec | 2.411 |
| Area | $1/4 \times \pi \times D^2$= | $m^2$ | 0.159 |
| Diameter | | m | 0.450 |

Loss coefficients △H1

| | | Pump No.3 | Remark |
|---|---|---|---|
| Inlet | | 0.10 | |
| Sluice valve | | 0.15 | |
| Check valve | | 1.2 | |
| Outlet | | 1 | |
| Bend | | 0.28 | assumed |
| Friction loss | 0.047 x L/D= | 1.044 | L=10m |
| Sum | (S) | 3.77 | |

△H1 (S) x $V^2/2g$= 0.93 m

Total head required

| | | Pump No.3 | |
|---|---|---|---|
| H1 | | 10.2 | m |
| △H1 | | 0.93 | m |
| H1+△H1 | | 11.13 | m |

use → 11.0 m

**6) Grit, Oil/Sand Removal Equipment**

**a. Design Flow**

| | $m^3$/day | $m^3$/hour | $m^3$/sec |
|---|---|---|---|
| Qaverage | 60,000 | 2,500 | 0.694 |
| Qday (max) | 71,000 | 2,958 | 0.822 |
| Qhour (dry) | 119,000 | 4,958 | 1.377 |

**b. Tank Geometry**

**Grit Chamber**

Surface Load 1,800 $m^3/m^2$/day
sand specific gravity 2.65
Required Surface Area 66.1 $m^3$
Trains 4 Channels
Width 1.5 m
Height 0.7 m
Length 10 m
Velocity 0.33 m/sec
Detention Time 30.5 sec

**Oil Separator (if necessary)**

Required Retention Time 5 min (5-30min)Quib WWTP
Required Volume 413 $m^3$

Trains 4 Channels
Width 4.0 m
Height 2.0 m
Length 11.6 m

**7) Flow Measurement**

Select 3ft (91.44cm) flume, the range of measurable flow 0.0173-1.43 $m^3$/s
No. of Flow Measurs 1 unit

## 8) Primary Sedimentation Tank

Design Flow

| | | |
|---|---|---|
| Qday (max) | 71,000 | $m^3$/day |

| | | | |
|---|---|---|---|
| Overflow Rate | 50 | $m^3/m^2$/day | |
| Tanks | 16 | basins | |
| Influent to Each Tank | | | 4,438 $m^3$/day/basin |
| Required Surface Area of Each Tank | | | 89 $m^2$ |
| Retention Time | 1.5 | hour | |

### a. Tank Geometry

| | | | | | | |
|---|---|---|---|---|---|---|
| Width | 5.0 | m | | | | |
| Tank Length | 88.8 | ÷ | 5.0 | = | | 17.75 m |
| Effective Depth | 3.0 | m | | | use | 17.8 m |
| Number of Basins | 16 | basins | | | | |

| Tank Geometry | | | | | | |
|---|---|---|---|---|---|---|
| W | 5.0 m | × H | 3.0 m | × | 16 | basins |
| L | 17.8 m | | | | ( 8 | tanks) |

Check

| | | |
|---|---|---|
| Basin Capacity | 4,272 $m^3$ | |
| Retention Time | Qday (max)= | 1.44 hour |
| Overflow Rate | | 50 $m^3/m^2$/day |

### b. Raw Sludge Pumping Equipment

| | | | |
|---|---|---|---|
| Sludge Volume | 1,284 $m^3$/day | = | 0.891 $m^3$/min |
| Pump Type | Centrifugal Screw Pump | | |
| Pump Bore Size | 100 mm | | |
| Delivering Capacity | 0.5 $m^3$/min | | |
| Total Dynamic Head | 10 m | | |
| Motor Output | 3.7 kw | | |
| Number of Pumps | 8 units (including 4 standby) | | |

## 9) Aeration Tank

Design Flow

| | | |
|---|---|---|
| Qday (max) | 71,000 | $m^3$/day |

| | | |
|---|---|---|
| BOD-SS load | 0.35 | kg BOD/kgSS/day |
| MLSS | 1,600 | mg/l |

Return Sludge Solid Concentration 8,000 mg/l
Sludge Return Ratio 1,600 ÷ ( 8,000 − 1,600 )
= 0.25 → 0.25
Inflow BOD to Reactors 71,000 × 200 $\times 10^{-3}$
× (1-0.3) = 9,940 kgBOD/day

Reactor Tanks SS V × 1,600 $\times 10^{-3}$ kgMLSS
Required Tank Capacity 9,940 ÷ 1.6 ÷ 0.35
= 17,750 $m^3$
Aeration Time 6.0 hour
Retention Time 6.0 hour
Required Volume 17,750 $m^3$

**a. Tank Geometry**

Width 5.0 m
Effective Depth 5.0 m
Cross Sectional Area 5.0 × 5.0 $-1/2\times1.0^2\times2$
$-1/2\times0.6^2\times2$
= 23.75 $m^2$

Number of Tanks 16 tanks or
Capacity of One Tank 1,109 $m^3$
Tank Length 46.71 use 47.0 m

| Tank Geometry | | | | | | |
|---|---|---|---|---|---|---|
| W | 5.0 | m | × | L | 47.0 | m |
| H | 5.0 | m | × | 16 tanks | | |

Check

| | | |
|---|---|---|
| Volume | $m^3$ | 17,750 |
| Retention Time | hour | 6.00 |

**b. Blower**

Blower Volume 5 Q assuming
355,000 $m^3$/day = 246.5 $m^3$/min
use 250 $m^3$/min

Blowers **Multiple step blower manufactured by steel board**
Size and Specification 300/250 mm 63 $m^3$/min/unit
Output 90 kw
Unit 5 units (including 1 standby)

**10) Secondary Sedimentation Tank**

Design Flow

| | | |
|---|---|---|
| Qday (max) | 71,000 | $m^3$/day |

| | | |
|---|---|---|
| Overflow Rate | 25 | $m^3/m^2/day$ |
| Total tank number is | 16 | tanks |
| Influent to Each Tank | 4,438 | $m^3/day/tank$ |
| Required Surface Area of Each Tank | 177.5 | $m^2$ |

**a. Tank Geometry**

| | | | | | | |
|---|---|---|---|---|---|---|
| Width | 5.0 | m | | | | |
| Tank Length | 177.5 | ÷ | 5.0 | = | 35.50 | m |
| Effective Depth | 3.0 | m | | use | 35.5 | m |
| Number of Basins | 16 | basins | | | | |

| Tank Geometry | | | | | | |
|---|---|---|---|---|---|---|
| W | 5.0 | m | × H 3.0 | m × | 16 | basins |
| L | 35.5 | m | | | ( 8 | tanks) |

Check

| | | | | |
|---|---|---|---|---|
| Surface Area | $m^2$ | 2,840 | | |
| Surface Load Rate | $m^3/m^2/day$ | 25.0 | = 25 | $m^3/m^2/day$ |
| Retention Time | hour | 3.4 | | |

**b. Excess Sludge Pumping Equipment**

| | | | |
|---|---|---|---|
| Excess Sludge Volume | 895 | $m^3/day$= | 0.62 $m^3/min$ |
| Pump Type | Submersible pump | | |
| Delivering Capacity | 0.5 | $m^3/min$ | |
| Total Dynamic Head | 6.0 | m | |
| Motor Output | 3.7 | kw | |
| Number of Pumps | 4 | units (including 2 standby) | |

**c. Return Sludge Pumping Equipment**

| | | | | | | | |
|---|---|---|---|---|---|---|---|
| Average Sludge Return | | 25 | % | | | | |
| Return Sludge Volume | | 71,000 | × | 0.25 | = | 17,750 | $m^3/day$ |
| (Average) | | | | | = | 12.33 | $m^3/min$ |
| (Max) | 50 % | 71,000 | × | 0.5 | = | 24.65 | $m^3/min$ |

| | | |
|---|---|---|
| Pump Type | Submersible pump | |
| Diameter | 250 | mm |
| Capacity | 3 | $m^3/min$ |
| Total Dynamic Head | 6.0 | m |
| Motor Output | 11 | kw |
| Number of Pumps | 8 | units |

## 11) Sludge Thickeners

Hydraulic Capacity of Tanks

| | units | | |
|---|---|---|---|
| Solids Input | t/day | 12.84 | |
| Input Sludge Volume | $m^3$/day | 1284 | |
| | | 1.0 | %assume |
| Output Sludge Volume | $m^3$/day | 428 | |
| | | 3.0 | %assume |

Floor Loading 60 $kg/m^2/day$

Required Surface Area 213.9 $m^2$

### a. Tank Geometry

Pump Type Circular Flow Type

Internal Diameter 12.0 m

Effective Depth 3.0 m

Number of Tanks 2 unit

Check

| | units | |
|---|---|---|
| Water Surface Area | $m^2$ | 288.0 |
| Floor Loading | $kg/m^2/day$ | 44.6 |

### b. Sludge Digester

Hydraulic Capacity of Tanks

| | units | | |
|---|---|---|---|
| Solids Input | t/day | 12.84 | |
| Input Sludge Volume | $m^3$/day | 428 | |
| | | 3.0 | %assume |
| Output Sludge Volume | $m^3$/day | 428 | |
| | | 3.0 | %assume |

Retention Time 20.0 day

Required Volume 8,558 $m^3$

Pump Type Circular Radial Flow Type

Internal Diameter 17.8 m

Effective Depth 8.9 m

Number of Tanks 4 units

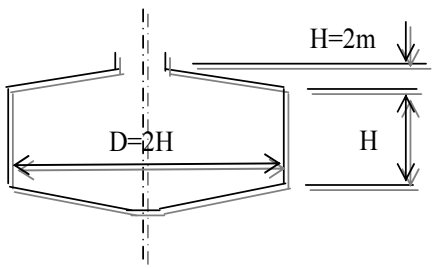

Volume of Tanks $3.14/4 \times D^2 \times H$ = 2,214 $m^3$/tank

Check

| | unit | |
|---|---|---|
| Volume of Tanks | $m^3$ | 8,854 |
| Retention Time | day | 20.7 |

**13) Mechanical Sludge Dewatering**

Filter Capacity Calculation

| | unit | |
|---|---|---|
| Solids Input | t/day | 8.43 |

Yield per Unit Length 110 kg/m/hr
Filter Width 3 m
Daily Operation Time 6 hr
Working Days/Week 5 day
Solid Load per Hour
= 8.43 × 7 / 5 $\times 10^3$ / 6
= 1,966 kg/hour
Required Number of Belt Press
= 1,966 / 110 / 3
= 6.0 use → 6 unit

Type Belt Filter Press
Filter Loading Rate 110 kg/m/hr
Filter Width 3 m
Motor Output 2.2 kw
Number of Filters 6 units

## (2)List of Mechanical Equipment

### 1) Screen System Equipment

| No. | Equipment | Type | Size and Specification | Qt'y | Output kW/unit | Total out-put(kW) | Remarks |
|---|---|---|---|---|---|---|---|
| 1 | Screen channel influent gates | Cast iron made, manually operated sluice gate | 700W x 700H | 4 | – | – | |
| 2 | Coarse screens | Manually screened (removable type) | Clear opening 100 mm 1.4mW x1.0mH x 60° | 4 | – | – | |
| 3 | Fine screens | Mechanically-cleaned, (intermittently operated) | Clear opening 20 mm, 1.4mW x 1.0mH x 75° | 4 | 0.75 | 3 | |
| 4 | Grab bucket | | | 2 | – | – | |
| 5 | Grit chamber effluent gates | Cast iron made, manually operated sluice gate | 700W x 700H | 4 | – | – | |
| 6 | Screenings conveyors | Trough belt conveyor | | 2 | 1.5 | 3 | |
| 7 | Screenings skip hois | Wire rope operated | | 1 | – | 2.2 | |
| 8 | Screenings hopper | Steel made, motor operated | | 1 | – | 1.5 | |
| 9 | Screening hoist | Motor operated hoist with trolley | | 1 | – | – | |
| 10 | water level gage | Immension type | | 2 | – | – | |
| 11 | Floor drain pumps | Submersible pump | 65mmΦ x 0.3m³/min. x10m | 2 (1) | 1.5 | 1.5 | Standby excluded |
| | Total motor outputs of (1) | | | | | 11.2 | kW |

### 2) Grit Chamber, Flow measurement Equipment

Gravity Tyoe Grit Chamber 1.5mWx0.7mHxL10.0mx4Channels

| No. | Equipment | Type | Size and Specifications | Qt'y | Output kW/unit | Total out-put(kW) | Remarks |
|---|---|---|---|---|---|---|---|
| 1 | Grit channel Influen channel gates | Manually operated, cast iron sluice gate | 700mmWx700mmH design hydraulic depth;2m | 4 | – | – | |
| 2 | Grit collector | Trolley with grit lifting pump | 125mm x 15m³ | 2 | – | – | |
| 3 | Blowers | turbo blower | | 1 | 15 | 15 | |
| 4 | Grit channel effluent channel gates | Manually operated, cast iron sluice gate | 700mmWx700mmH design hydraulic depth;2m | 4 | – | – | |
| 5 | Flow measurement equipment | Parshall flume | 3 ft,ype | 1 | – | – | |
| | Total motor outputs of (2) | | | | | 15 | kW |

## 3) Pumping Equipment

| No. | Equipment | Type | Size and Specifications | Qt'y | Output kW/unit | Total out-put(kW) | Remarks |
|---|---|---|---|---|---|---|---|
| 1 | No.1 Pumps | Submersible pump | 300mmF x 9.5m$^3$/mi x17m | 2 | 45 | 90 | |
| 2 | Check valves | Slow-closing check valve | | 2 | – | – | |
| 3 | Discharge valves | Motor-operated butterfly valve | | 2 | 0.2 | 0.4 | |
| 4 | No.2 Pumps | Submersible pump | 450mmF x 19m$^3$/mi x17m | 2 (1) | 90 | 90 | Standby excluded |
| 5 | Check valves | Slow-closing check valve | | 2 | – | – | |
| 6 | Discharge valves | Motor-operated butterfly valve | | 2 | 0.2 | 0.4 | |
| 7 | No.3 Pumps | Submersible pump | 450mmF x 23m$^3$/mi x11m | 2 | 55 | 55 | |
| 8 | Check valves | Slow-closing check valve | | 2 | – | – | |
| 9 | Discharge valves | Motor-operated butterfly valve | | 2 | 0.2 | 0.4 | |
| 10 | Crane for pumps | Manually-operated crane with chain block | | 1 | – | – | |
| | Total motor outputs of (3) | | | | | 236.2 | kW |

### 4) Primary Sedimentation Tanks(8Tanks)

W5m x L18m x 16Channels(8Tanks)

| No. | Equipment | Type | Specifications | Qt'y | Output kW/unit | Total ouput | Remarks |
|---|---|---|---|---|---|---|---|
| 1 | Distribution tank gate | Sluice gate, manual operati cast iron, rectangular | 300W x 300H.Design hydraulic depth,0.7m | 4 | – | – | |
| 2 | Inlet gates | Sluice gate, manual operati cast iron, rectangular | 300W x 300H.Design hydraulic depth,0.7m | 16 | – | – | |
| 3 | Sludge collector | Chain flight method 2 units 1 drive | W10m x L18m x H3.0m | 8 | 0.75 | 6 | w10=w5x2channels |
| 4 | Sludge draw-off valve | Motor operated eccentric | 200mmF | 16 | 0.2 | 3.2 | |
| 5 | Raw sludge pumps | Non-clog centrifugal pump | 100mmFx1m$^3$/min .x10m | 4 (2) | 3.7 | 7.4 | Standby excluded |
| 6 | Bypass gates | Manually operated, cast iro made, circular sluice gate | F1,000mm.Design hydraulic depth,1.5m | 2 | – | – | |
| 7 | Raw sludge flow meter | Electro-magnetic flow mete | 100mmF | 2 | – | – | In electric works |
| 8 | Raw sludge densitometer | Ultra-sonic type | | 2 | – | – | |
| | Total motor output of (4) | | | | | 16.6 | kW |

### 5) Aeration Tanks (16 tanks)

W5m x L55mx H5mx16Tanks

| No. | Equipment | Type | Specifications | Qt'y | Output kW/unit | Total ouput | Remarks |
|---|---|---|---|---|---|---|---|
| 1 | Inflow control weirs | Manually operated movable weirs | 400W x 600H.Design hydraulic depth,0.7m | 16 | – | – | |
| 2 | Movable weirs for control of step inflow | Cast iron made, movable weirs | 400W x 600H.Design hydraulic depth,0.7m | 64 | – | – | |
| 3 | Return sludge inflow control weirs | Cast iron made, movable (separate type) | 600W x 600H.Design hydraulic depth,0.7m | 16 | – | – | |
| 4 | Aeration diffusers | Ceramic made diffuser (fine bubble, 300μ) | 0.82m$^3$/min. 8plates/holder header | | – | – | SUS holder headers, & butterfly valves |
| 5 | Air control valves | Air operated butterfly valve | 250mmF | 16 | – | – | Electro-magnetic box |
| 6 | Froth spray nozzles | Cast iron made movable type | 15mmFx 8l/min. x 1kg/cm$^2$ | 592 | – | – | 1.5 m interval 55/1.5=37units./tank |
| 7 | Air flow meters | Oriffice | 250mmF | 4 | – | – | Included in electric works |
| | Total motor output of (5) | | | | | 0 | kW |

### 6) Final Sedimentation Tanks (8 tanks)

W5m x L35.5m x H3.0m×16Channels(8Tanks)

| No. | Equipment | Type | Size and Specifications | Qt'y | Output kW/unit | Total output | Remarks |
|---|---|---|---|---|---|---|---|
| 1 | Inlet gates | Sluice gate, manual operation, cast iron | 300W x 300H Design hydraulic depth,0.7m | 16 | – | – | |
| 2 | Sludge collector | Chain flight method 2 units 1 drive | W10m x L35.5m x H3.0m | 8 | 1.5 | 12.0 | w10= w5x2channels |
| 3 | Telescope pipe | | 200mmF | 16 | – | – | |
| 4 | Return sludge pumps | Submersible pump | 250mmF x 3.0m$^3$/min, x 6m | 8 | 11 | 77.0 | |
| 5 | Excess sludge pumps | ” | 100mmF x 0.5m$^3$/min. x 6m | 8 (4) | 3.7 | 14.8 | Standby excluded |
| 6 | Return sludge flow meters | Electronic-magnetic flow meter | 250mmF | 4 | – | – | Included in electric works |
| 7 | Excess sludge flow meters | Electronic-magnetic flow meter | 100mmF | 4 | – | – | " |
| 8 | Return sludge densitometers | Ultra-sonic type | 250mmF | 4 | – | – | " |
| | Total motor output of (6) | | | | | 103.8 | kW |

### 7) Sludge Thickeners (2 tanks)

D12.0 m xH3.0m x2Tanks

| No. | Equipment | Type | Size and Specifications | Qt'y | Ouput kW/unit | Total output | Remarks |
|---|---|---|---|---|---|---|---|
| 1 | Sludge thickeners | Rotating scraper, with pickets | 12.0mF x3.0mH | 2 | 0.4 | 0.8 | |
| 2 | Distribution tank, movable weirs | Manually operated, cas iron weir | 300mmW | 2 | – | – | |
| 3 | Sludge draw-off pump | Non-clog centrifugal pump | 100mmF x 0.5m$^3$/min x 10m | 2 (1) | 15 | 15 | Standby excluded |
| 4 | Sludge draw-off valve | Air operated eccentric valve | 100mmF | 2 | 0.2 | 0.4 | |
| | Total motor outputs of (7) | | | | | 16.2 | kW |

### 8) Sludge Digestion Facilities (4 digesters)

| No. | Equipment | Type | Size and Specifications | Qt'y | Ouput kW/unit | Total output | Remarks |
|---|---|---|---|---|---|---|---|
| 1 | Scum draw-off valves | Motor operated eccentric valve. | 100mmF x 0.5m$^3$/min x 10m | 4 (2) | 15 | 30 | Standby excluded |
| 2 | Digested sludge draw off valves | Motor operated eccentr valve. | 100mmF | 4 | 0.2 | 0.8 | |
| 3 | Sludge mixer | Gas stirring device. | | 4 | – | – | |
| 4 | Compressor for gas stirring. | | | 4 (2) | 1.5 | 3 | Standby excluded |
| | Total motor outputs of (8) | | | | | 33.8 | kW |

## 9) Sludge Dewatering Equipment

| No. | Equipment | Type | Size and Specifications | Qt'y | Output kW/unit | Total output | Remarks |
|---|---|---|---|---|---|---|---|
| 1 | Sludge storage tank mixers | Vertical paddle type | 2,000mmF | 2 | 7.5 | 15 | |
| 2 | Sludge feed pumps | Positive displace-ment pump | 100mmF x 20m$^3$/hr. x 20m | 6 | 5.5 | 33 | |
| 3 | Sludge dewatering | Belt filter press | 3 m effective belt width per hour load in dry solid basis | 6 | 4.85 | 29.1 | |
| 4 | No.1Cake conveyor | Trough belt | 600mmW x 8,500mmL | 2 | 1.5 | 3 | |
| 5 | No.2 Cake conveyo | Horizontal trough belt conveyor | 600w x5,500L | 2 | 1.5 | 3 | |
| 6 | Cake hoppers | Motor operated | 10m$^3$ | 2 | 3.7 | 7.4 | |
| 7 | Chemical container | Cylinder type | 700 L | 2 | — | — | |
| 8 | Chemical feeders | Volumetric dry feeder | 4L/min. | 2 | 0.4 | 0.8 | |
| 9 | Chemical dosage ta | Cylinder type | 10m$^3$ capacity | 2 | 5.5 | 11 | |
| 10 | Chemical feed pum | Positive displace-ment pump | 50mmF x 3m$^3$/hr x 20m | 2 | 1.5 | 3 | |
| 11 | Chemical container hoists | Motor operated | 1 ton | 1 | 1.5<br>0.4 | 1.5 | |
| 12 | Pumps for belt filte cleaning water | Centrifugal pump | 50mmF x 0.3 m$^3$/min. x 60 m | 2<br>(1) | 7.5 | 7.5 | Standby excluded |
| 13 | Maintenance crane | Suspension type | 2 ton | 1 | — | — | |
| 14 | Chain block | Geared trolley type | 2 ton | 1 | — | — | |
| 15 | Floor drain pumps | Submersible non-clog pump | 65mmF x 0.3m$^3$/min. x 10 m | 1 | 5.5 | 5.5 | |
| | Total motor outputs of (9) | | | | | 119.8 | kW |

## 10) Aeration Tank Blower System

| No. | Equipment | Type | Size and Specifications | Qt'y | Output kW/unit | Total output | Remarks |
|---|---|---|---|---|---|---|---|
| 1 | No.1 Blowers | Multiple step blower manufactured by the steel bo | 300mm/250 mm 62m$^3$/min | 5<br>(1) | — | — | |
| 2 | Electric motors for No.1 blowers | | | 5<br>(1) | 90 | 360 | Standby excluded |
| 3 | No.1 blower valves | Electric-operated valve | 250mm | 5<br>(1) | 0.4 | 1.6 | Standby excluded |
| 4 | Maintenance crane | Geared trolley type | 3 tons | 1 | — | — | |
| | Total motor outputs of (10) | | | | | 361.6 | kW |
| **Grand Total of Motor Outputs** | | | | | | **914.2** | **kW** |

### A11.3.2 TADEO WWTP

The Outline of Tadeo WWTP is shown in the following and the layout of Tadeo WWTP is shown in Figure A11.13.

**(1) Design Flows** ($m^3$/day)

| | |
|---|---|
| Qaverage | 9,400 |
| Qdaily maximum flow | 11,200 |
| Qhoury maximum flow | 22,900 |

**(2) Wastewater rand Sludge Treatment Process**

Wastewater Treatment: Conventional activated sludge process
Sludge Treatment: Sludge thickening →Anaerobic Digestion without any heating system→Mechanical Dewatering (70%)+Drying bed (30%)
→（Sanitary Landfill）

**(3) Design Wastewater Quality**

| Parameter | Treatment Efficiency (%) | | | Design Treated Wastewater Quality (mg/L) | | |
|---|---|---|---|---|---|---|
| | Primary | Secondary | Overall | Influent | Primary Effluent | Secondary Effluent |
| $BOD_5$ | 30 | 86 | 90.2 | 210 | 147 | 20.6 |
| SS | 40 | 84 | 90.4 | 210 | 126 | 20.2 |

**(4) Main Facilities**

| Facility | Facility Type | Quality | Size, Capacity, Specs | Remarks |
|---|---|---|---|---|
| 1.Submersible pumps | | 3(1)units | 300mmFx8$m^3$/min | 1standby |
| 2.Primary sedimentation tank | | 4units | 6.0mWx9.5mLx3.0mH | Surface loading 50$m^3/m^2$/day |
| 3.Aeration tank | | 4units | 6.0mWx25.0mL x5.0mH | BOD-SS loading: 0.35kgBOD/kgSS/day Retention time 6hours |
| | Rotary Blower | 3(1)units | F150mmx19$m^3$/min | 1standby、5Q |
| 4.Final sedimentation tank | | 4units | 6.0mWx18.7mL x3.0mH | Surface loading: 25$m^3/m^2$/day |
| 5.Sludge thickener | | 2units | 4.5mWx4.5mLx4.0mH | Floor loading: 60kg/$m^2$/day |
| 6.Sludge digester | | 2units | 13.5mWx13.5mLx4.0mH | Retention time: 20days |
| 7.Mechanical dewatering | Belt filter press | 2units | Filter width: 1.5m | Filter loading rate: 90kg/m/hour |
| 8.Drying bed | | 1,300$m^2$ | Water depth 0.2m | Retention time: 11days |

### A11.3.3 GUANABACOA WWTP

The Outline of Guanabacoa WWTP is shown in the following and the layout of Guanabacoa WWTP is shown in Figure A11.14.

**(1) Design Flows** ($m^3$/day)

| | |
|---|---|
| Qaverage | 24,300 |
| Qdaily maximum flow | 28,900 |
| Qhoury maximum flow | 50,300 |

**(2) Wastewater and Sludge Treatment Process**

Wastewater Treatment: Conventional activated sludge process
Sludge Treatment : Sludge thickening →Anaerobic Digestion without any heating system→Drying Bed→（Sanitary Landfill）

**(3) Design Wastewater Quality**

| Parameter | Treatment Efficiency (%) | | | Design Treated Wastewater Quality (mg/L) | | |
|---|---|---|---|---|---|---|
| | Primary | Secondary | Overall | Influent | Primary Effluent | Secondary Effluent |
| $BOD_5$ | 30 | 86 | 90.2 | 210 | 147 | 20.6 |
| SS | 40 | 84 | 90.4 | 210 | 126 | 20.2 |

**(4) Main Facilities**

| Facility | Facility Type | Quality | Size, Capacity, Specs | Remarks |
|---|---|---|---|---|
| 1.Submersible pumps | | 2(1)units<br>2units | 400mmF x 16$m^3$/min<br>300mmF x 8$m^3$/min | 1standby |
| 2.Primary sedimentation tank | | 8units | 6.0mWx12.5mLx3.0mH | Surface loading 50$m^3/m^2$/day |
| 3.Aeration tank | | 8units | 6.0mWx32.0mLx5.0mH | BOD-SS loading: 0.35kgBOD/kgSS/day<br>Retention time 6hours |
| | Rotary Blower | 5(1)units | F200mmx26$m^3$/min | 1standby、5Q |
| 4.Final sedimentation tank | | 8units | 6.0mWx24.2mLx4.0mH | Surface loading: 25$m^3/m^2$/day |
| 5.Sludge thickener | | 2units | 6.8mWx6.8mLx4.0mH | Floor loading: 60kg/$m^2$/day |
| 6.Sludge digester | | 2units | 21.5mWx21.5mLx4.0mH | Retention time: 20days |
| 8.Drying bed | | 11,100$m^2$ | Water depth 0.2m | Retention time: 11days |

### 11.3.4 LA CUMBRE WWTP

The Outline of La Cumbre WWTP is shown in the following and the layout of La Cumbre WWTP is shown in Figure A11.15.

**(1) Design Flows** ($m^3$/day)

| | |
|---|---|
| Qaverage | 21,400 |
| Qdaily maximum flow | 25,400 |
| Qhoury maximum flow | 45,000 |

**(2) Wastewater and Sludge Treatment Process**

Wastewater Treatment: Conventional activated sludge process
Sludge Treatment : Sludge thickening →Anaerobic Digestion without any heating system→Mechanical Dewatering→（Sanitary Landfill）

**(3) Design Wastewater Quality**

| Parameter | Treatment Efficiency (%) | | | Design Treated Wastewater Quality (mg/L) | | |
|---|---|---|---|---|---|---|
| | Primary | Secondary | Overall | Influent | Primary Effluent | Secondary Effluent |
| $BOD_5$ | 30 | 86 | 90.2 | 200 | 140 | 19.6 |
| SS | 40 | 84 | 90.4 | 200 | 120 | 19.2 |

**(4) Main Facilities**

| Facility | Facility Type | Quality | Size, Capacity, Specs | Remarks |
|---|---|---|---|---|
| 1.Submersible pumps | | 2(1)units<br>2units | 400mmF x 16$m^3$/min<br>300mmF x 8$m^3$/min | 1standby |
| 2.Primary sedimentation tank | | 8units | 5.0mWx12.8mLx3.0mH | Surface loading 50$m^3/m^2$/day |
| 3.Aeration tank<br><br><br>Rotary Blower | | 8units<br><br><br>3(1)units | 5.0mWx35.0mLx5.0mH<br><br><br>F200mmx22$m^3$/min | BOD-SS loading: 0.35kgBOD/kgSS/day<br>Retention time 6hours<br>1standby、5Q |
| 4.Final sedimentation tank | | 8units | 5.0mWx25.5mLx3.0mH | Surface loading: 25$m^3/m^2$/day |
| 5.Sludge thickener | | 2units | 6.3mWx6.3mLx4.0mH | Floor loading: 60kg/$m^2$/day |
| 6.Sludge digester | | 2units | 19.7mWx19.7mLx4.0mH | Retention time: 20days |
| 7.Mechanical dewatering<br>Belt filter press | | 4units | Filter width: 2m | Filter loading rate: 90kg/m/hour |

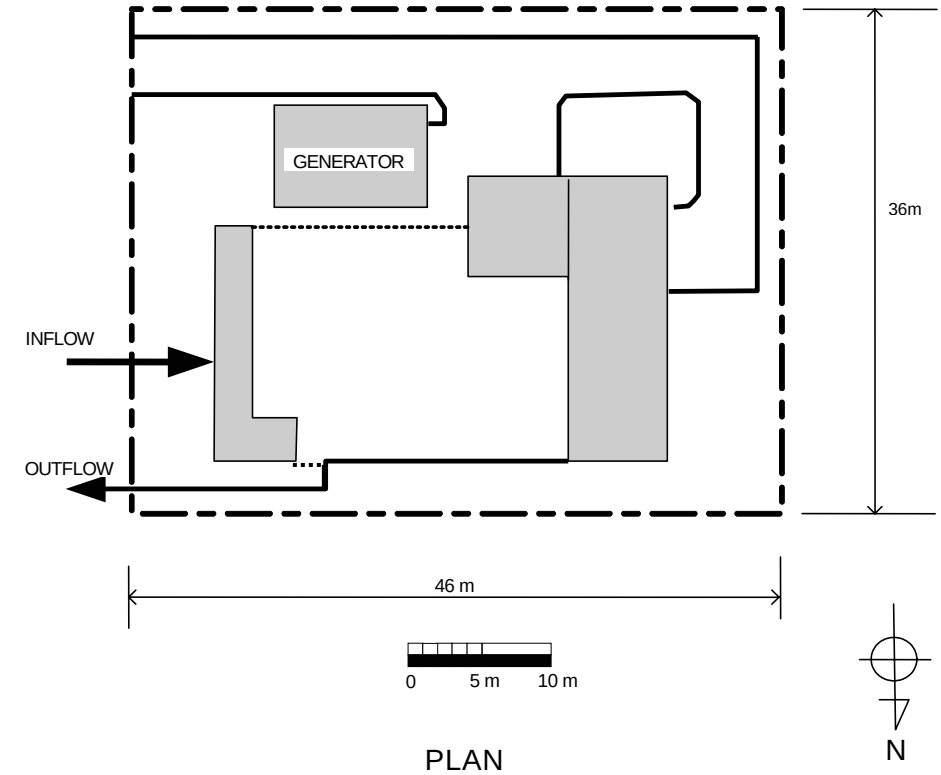


PLAN

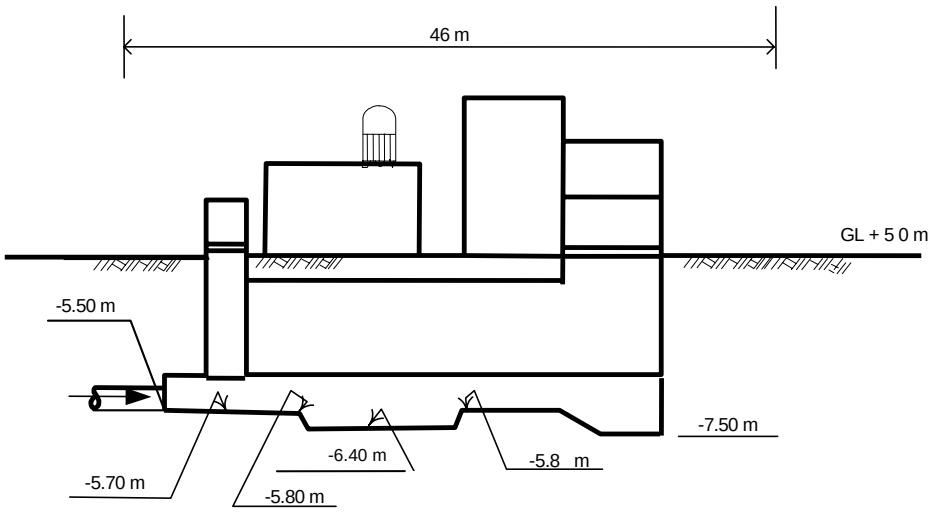


SECTION

| | |
|---|---|
| THE DEVELOPMENT STUDY ON THE IMPROVEMENT OF SEWERAGE AND DRAINAGE SYSTEM FOR THE HAVANA BAY | Figure A11.1<br>Layout of Matadero Pumping Station |
| JAPAN INTERNATIONAL COOPERATION AGENCY | |

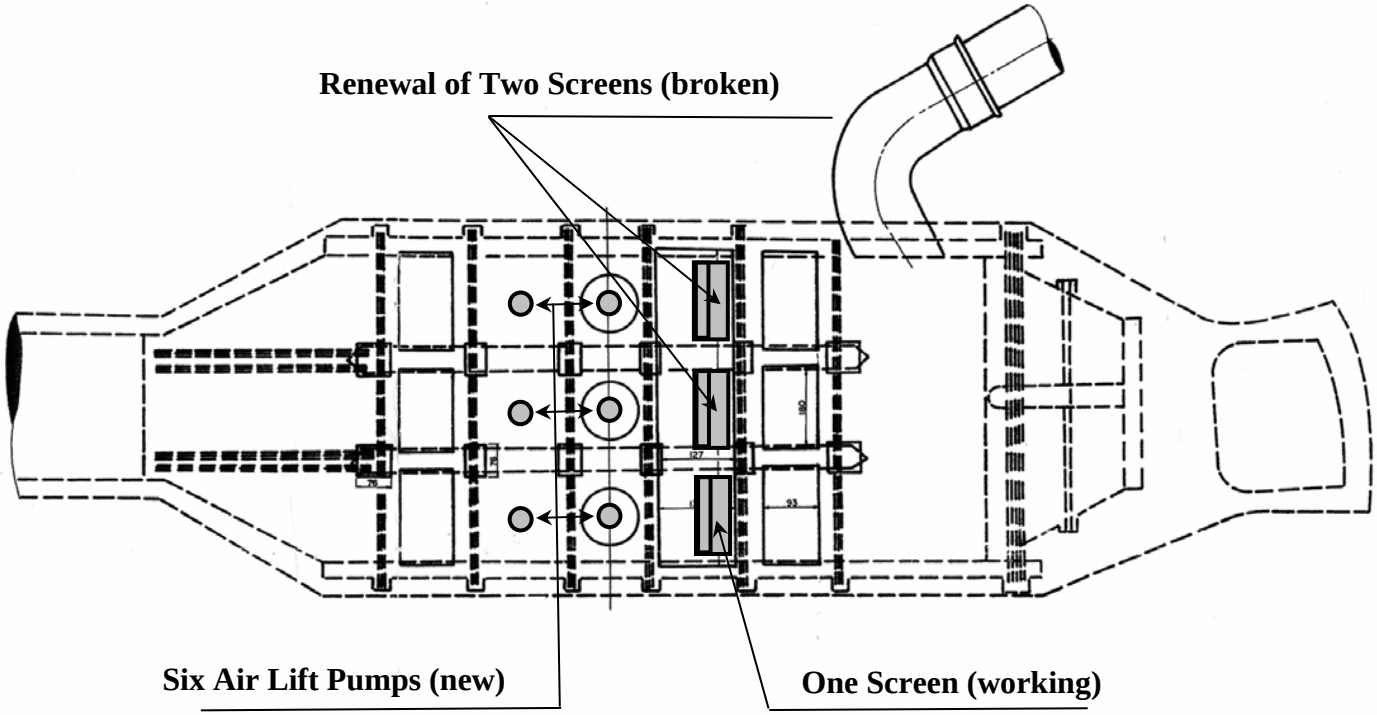


THE DEVELOPMENT STUDY ON THE IMPROVEMENT OF SEWERAGE AND DRAINAGE SYSTEM FOR THE HAVANA BAY

JAPAN INTERNATIONAL COOPERATION AGENCY

Figure A11.2
Rehabilitation of Caballeria Screen Facility



A11-31

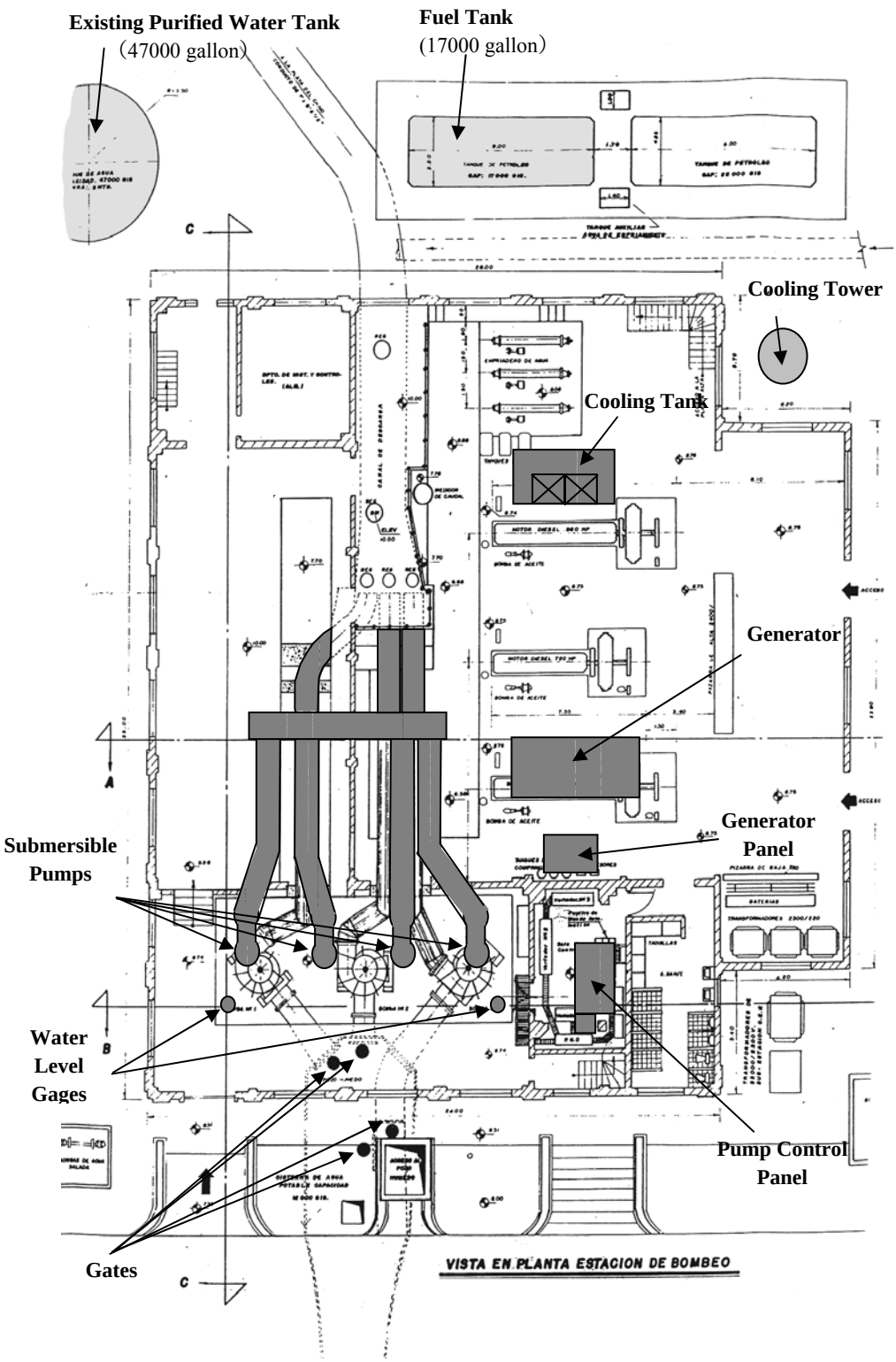


| | |
|---|---|
| THE DEVELOPMENT STUDY ON THE IMPROVEMENT OF SEWERAGE AND DRAINAGE SYSTEM FOR THE HAVANA BAY | Figure A11.3<br>Rehabilitation of Casablanca Pumping Station (1/2) |
| JAPAN INTERNATIONAL COOPERATION AGENCY | |

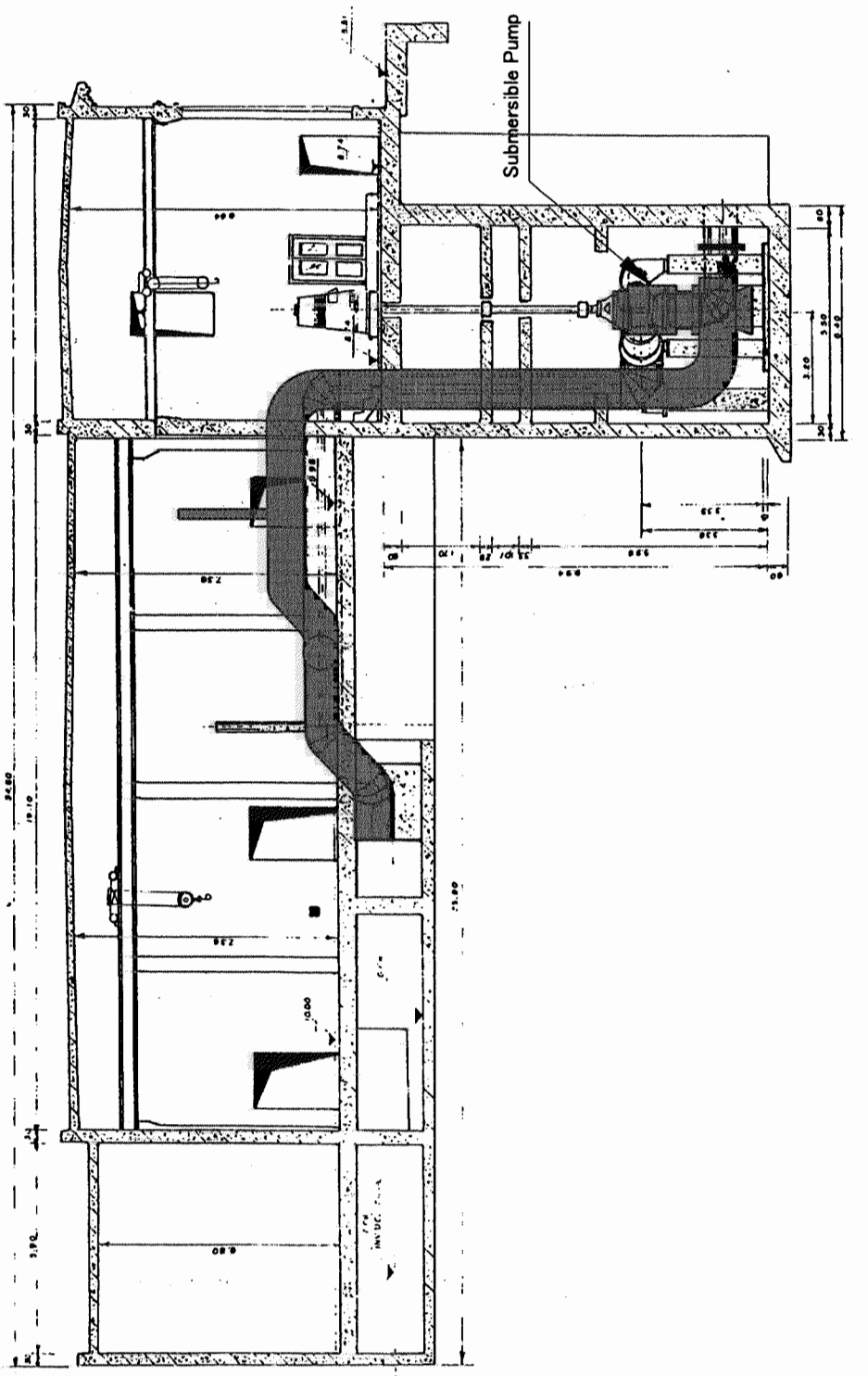


| | |
|---|---|
| THE DEVELOPMENT STUDY OF THE IMPROVEMENT OF SEWERAGE AND DRAINAGE SYSTEM FOR THE HAVANA BAY | Figure A11.4<br>Rehabilitation of Casablanca Pumping Station (2/2) |
| JAPAN INTERNATIONAL COOPERATION AGENCY | |

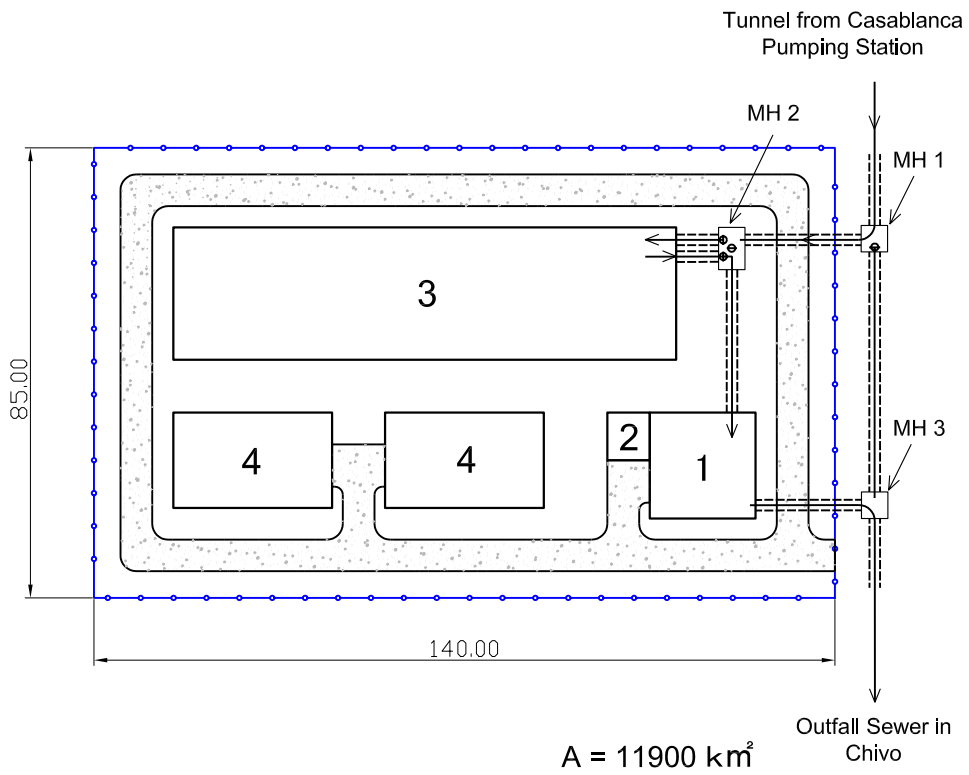


**Legend**

1. Repumping Station
2. Standby Generation Building
3. Sedimentation Tank
4. Mechanical Sludge Dewatering Building

0 10m 50m

S = 1:1,000

→ Wastewater Flow
Boundary
Gate
Manhole (MH1 - MH3)

THE DEVELOPMENT STUDY OF THE IMPROVEMENT OF SEWERAGE AND DRAINAGE SYSTEM FOR THE HAVANA BAY

JAPAN INTERNATIONAL COOPERATION AGENCY

Figure A11.5
Repumping Station, Sedimentation and Sludge Treatment Facilities

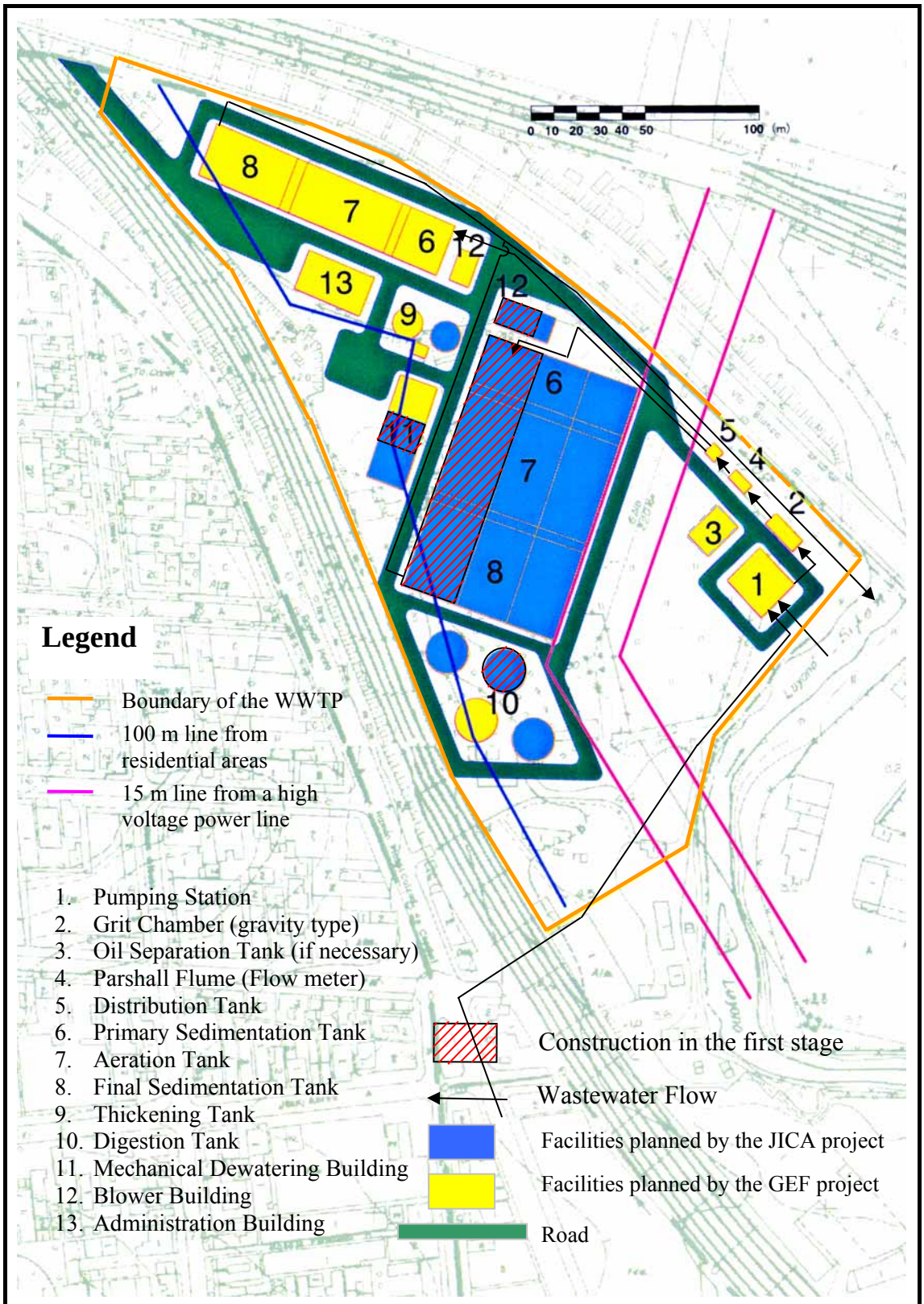


| | |
|---|---|
| THE DEVELOPMENT STUDY ON THE IMPROVEMENT OF SEWERAGE AND DRAINAGE SYSTEM FOR THE HAVANA BAY | Figure A11.6<br>Layout of Luyanó WWTP |
| JAPAN INTERNATIONAL COOPERATION AGENCY | |

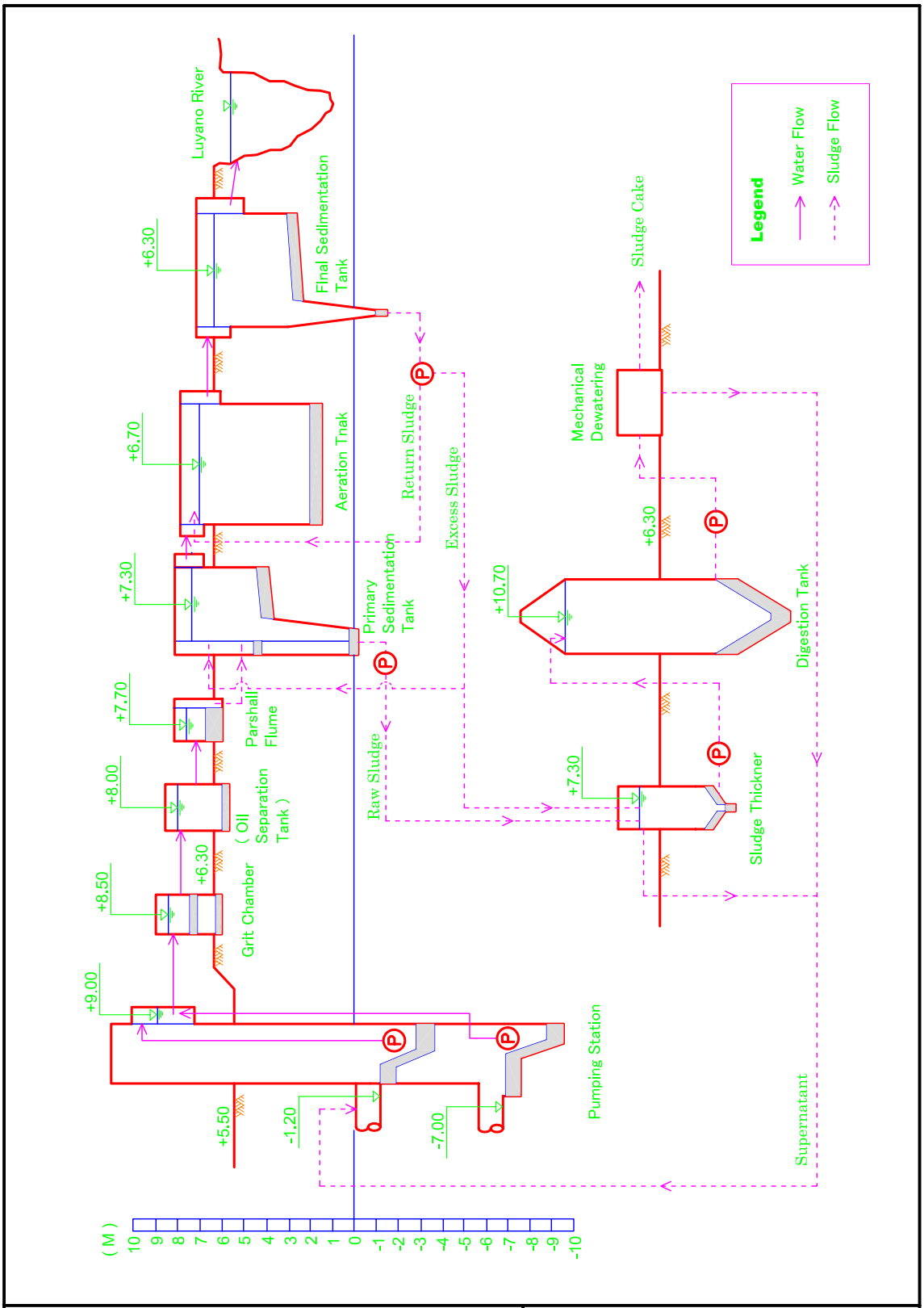


| | |
|---|---|
| THE DEVELOPMENT STUDY OF THE IMPROVEMENT OF SEWERAGE AND DRAINAGE SYSTEM FOR THE HAVANA BAY | Figure A11-7<br>Hydraulic Profile of Luyano WWTP |
| JAPAN INTERNATIONAL COOPERATION AGENCY | |

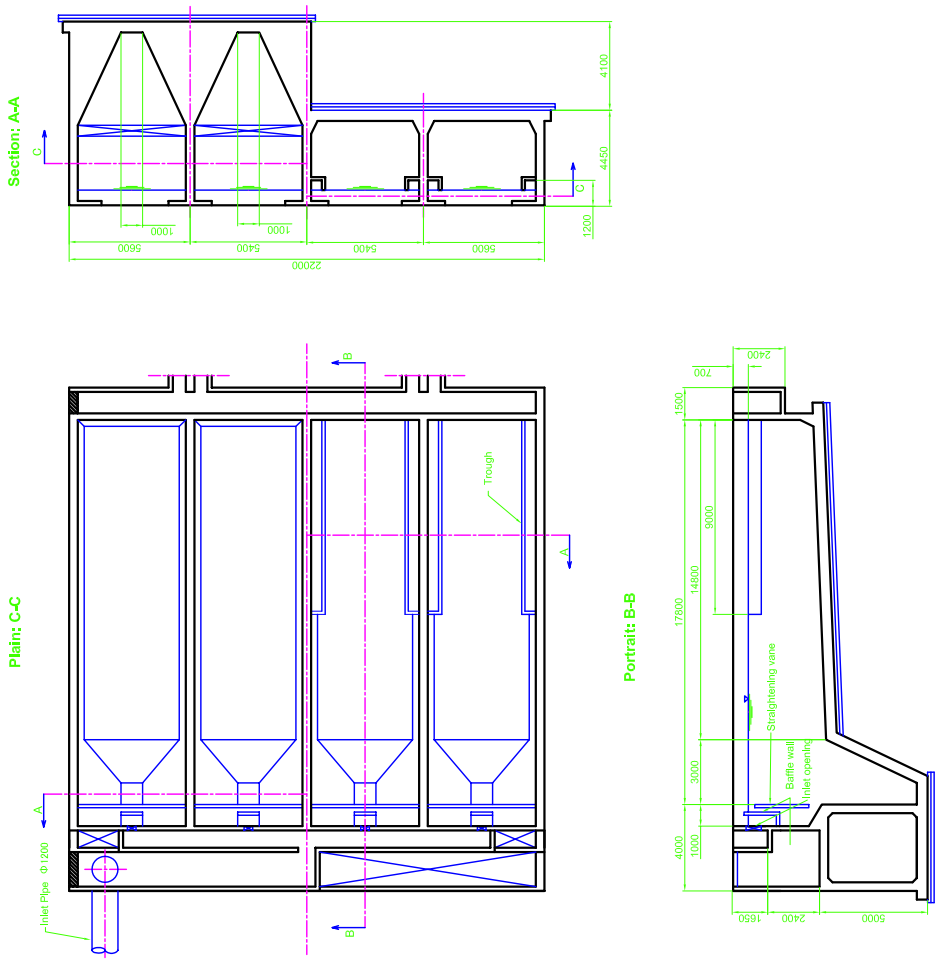


THE DEVELOPMENT STUDY OF THE IMPROVEMENT OF SEWERAGE AND DRAINAGE SYSTEM FOR THE HAVANA BAY

JAPAN INTERNATIONAL COOPERATION AGENCY

Figure A11.8
Primary Sedimentation Tank in Luyano WWTP

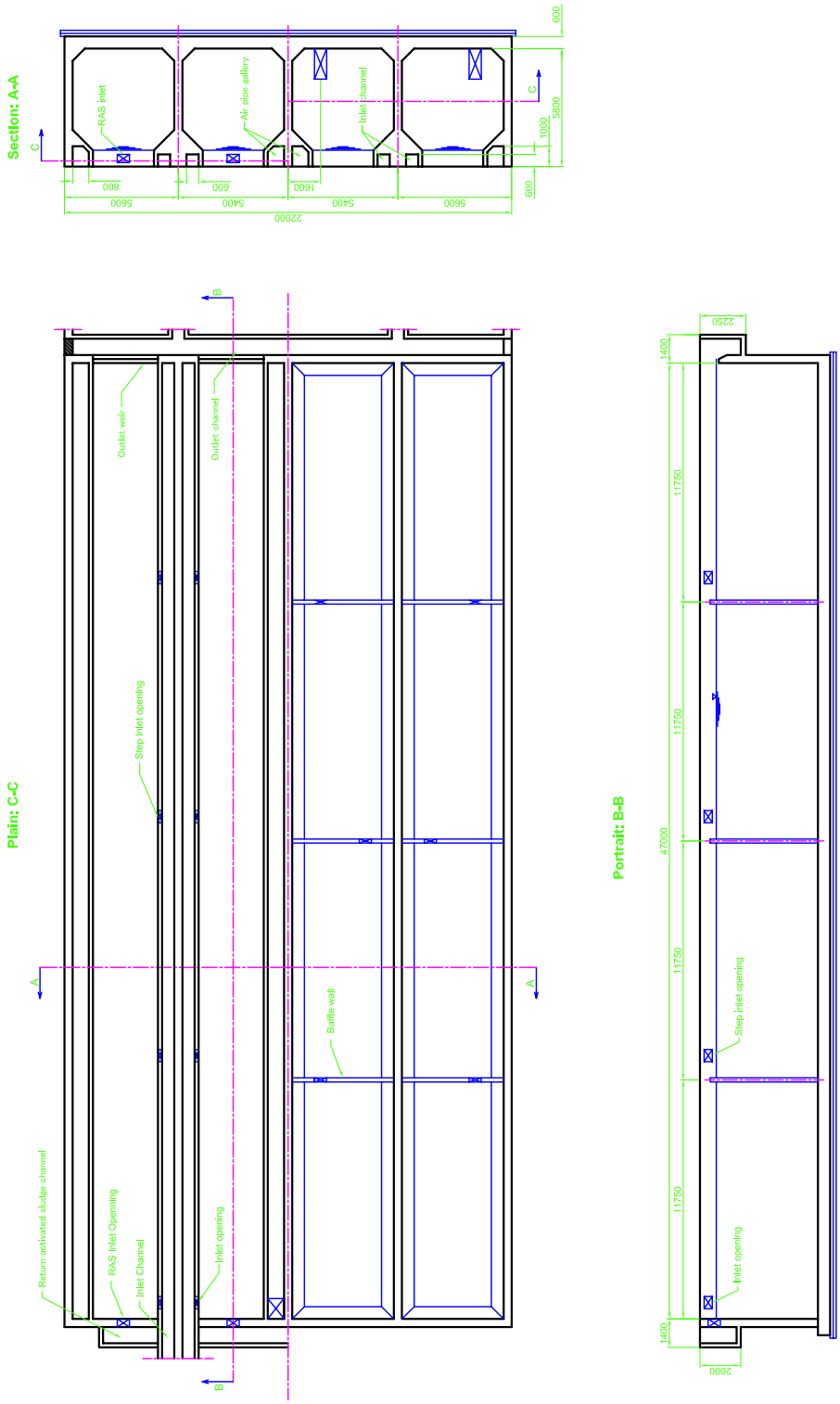


THE DEVELOPMENT STUDY OF THE IMPROVEMENT OF SEWERAGE AND DRAINAGE SYSTEM FOR THE HAVANA BAY

JAPAN INTERNATIONAL COOPERATION AGENCY

Figure A11.9
Aeration Tank in Luyano WWTP

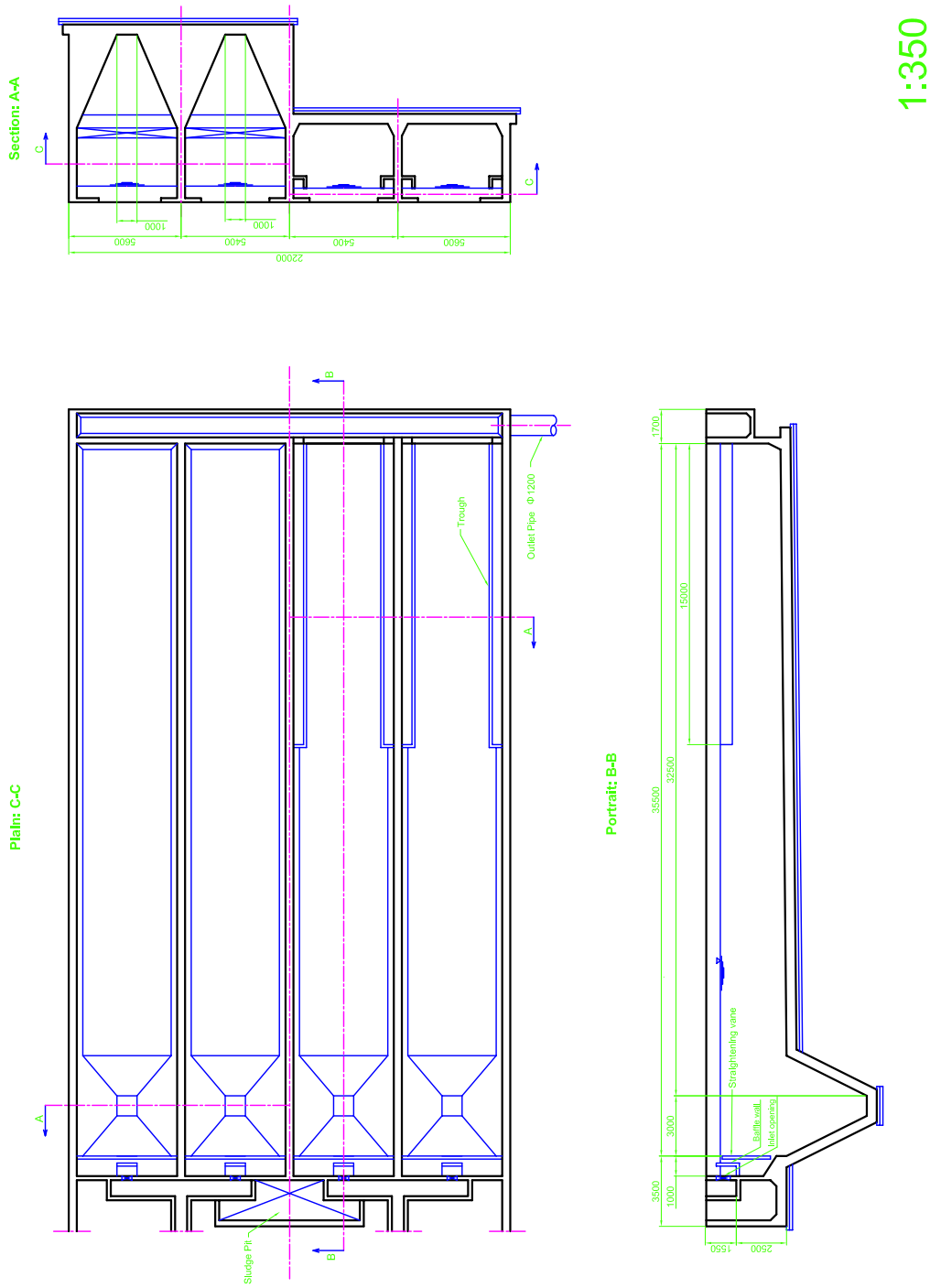


| | |
|---|---|
| THE DEVELOPMENT STUDY OF THE IMPROVEMENT OF SEWERAGE AND DRAINAGE SYSTEM FOR THE HAVANA BAY | Figure A11.10<br>Final Sedimentation Tank in Luyano WWTP |
| JAPAN INTERNATIONAL COOPERATION AGENCY | |

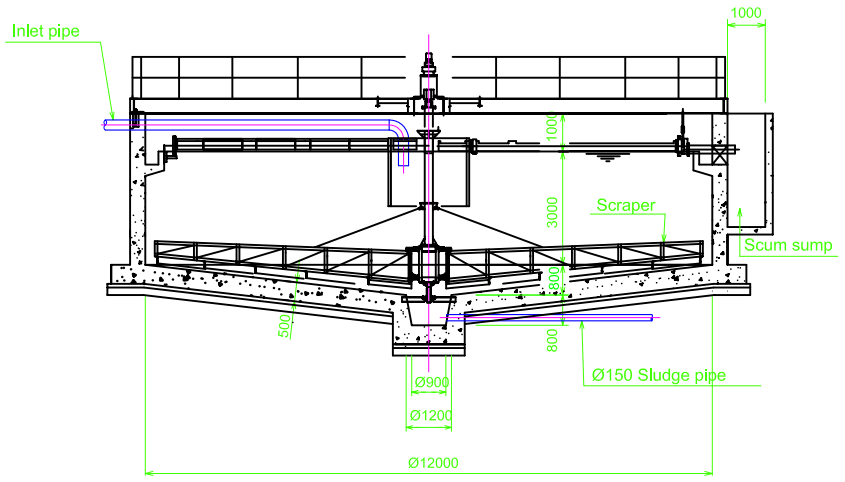


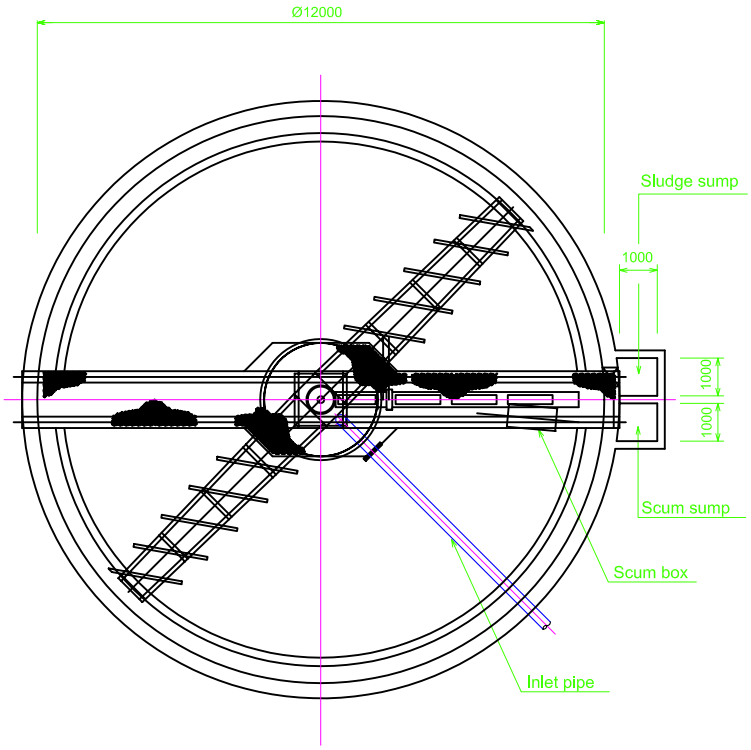


| | |
|---|---|
| THE DEVELOPMENT STUDY OF THE IMPROVEMENT OF SEWERAGE AND DRAINAGE SYSTEM FOR THE HAVANA BAY | Figure A11.11<br>Sludge Thickener in Luyano WWTP |
| JAPAN INTERNATIONAL COOPERATION AGENCY | |

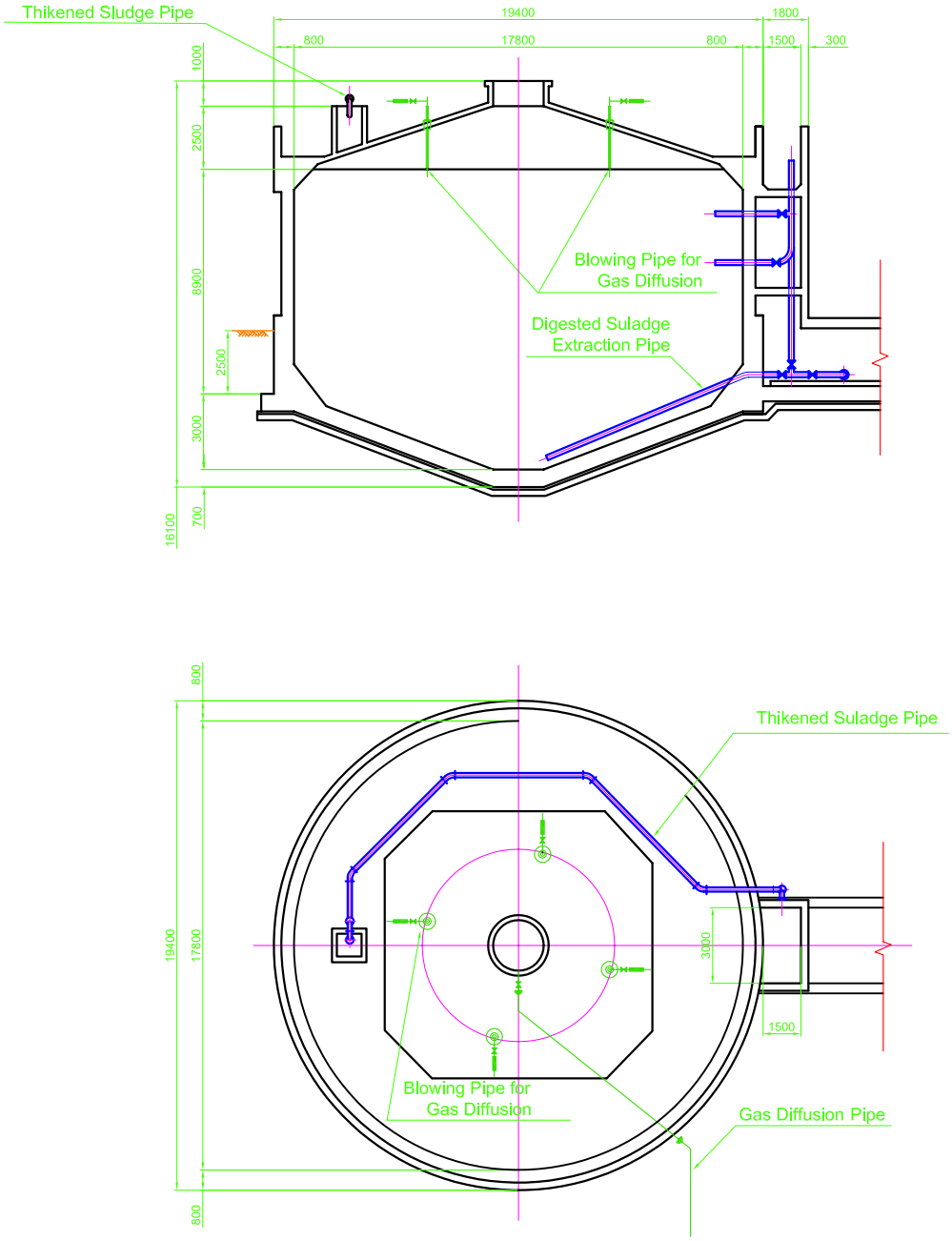


| | |
|---|---|
| THE DEVELOPMENT STUDY OF THE IMPROVEMENT OF SEWERAGE AND DRAINAGE SYSTEM FOR THE HAVANA BAY | Figure A11.12<br>Digestion Tank in Luyano WWTP |
| JAPAN INTERNATIONAL COOPERATION AGENCY | |

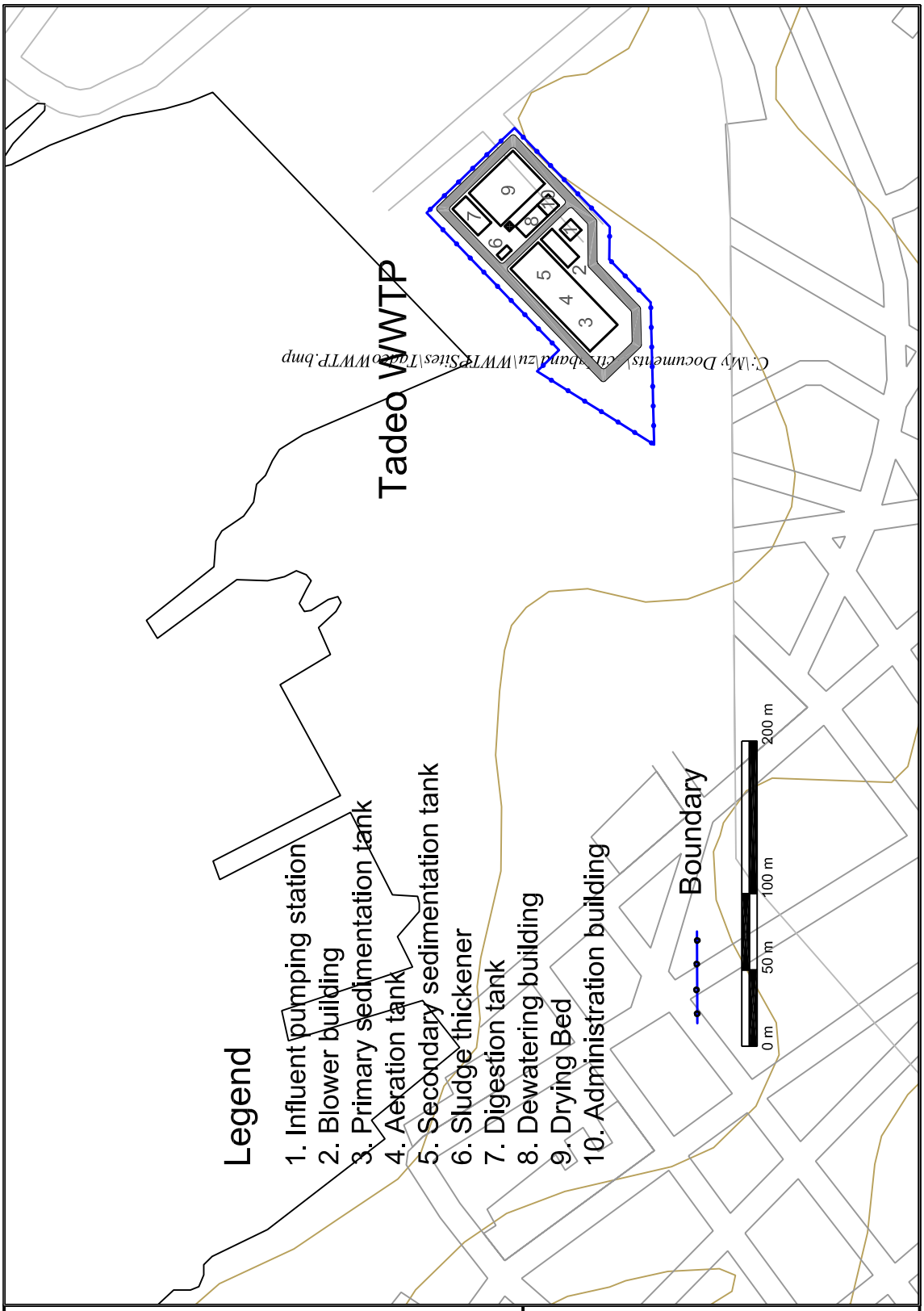


THE DEVELOPMENT STUDY OF THE IMPROVEMENT OF SEWERAGE AND DRAINAGE SYSTEM FOR THE HAVANA BAY

JAPAN INTERNATIONAL COOPERATION AGENCY

Figure A11.13
Layout of Tadeo WWTP

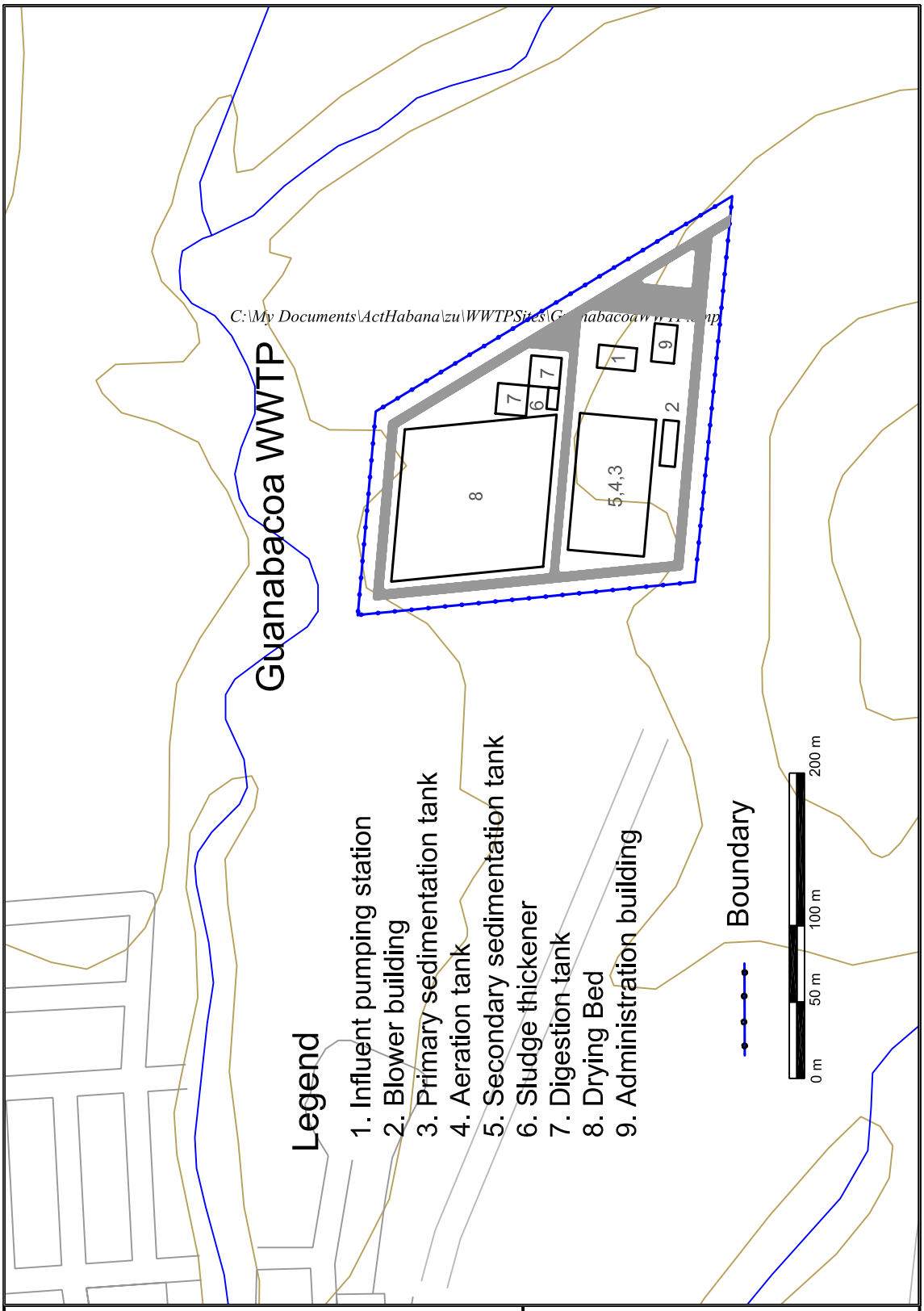


THE DEVELOPMENT STUDY OF THE IMPROVEMENT OF SEWERAGE AND DRAINAGE SYSTEM FOR THE HAVANA BAY

JAPAN INTERNATIONAL COOPERATION AGENCY

Figure A11.14
Layout of Cuanabacoa WWTP

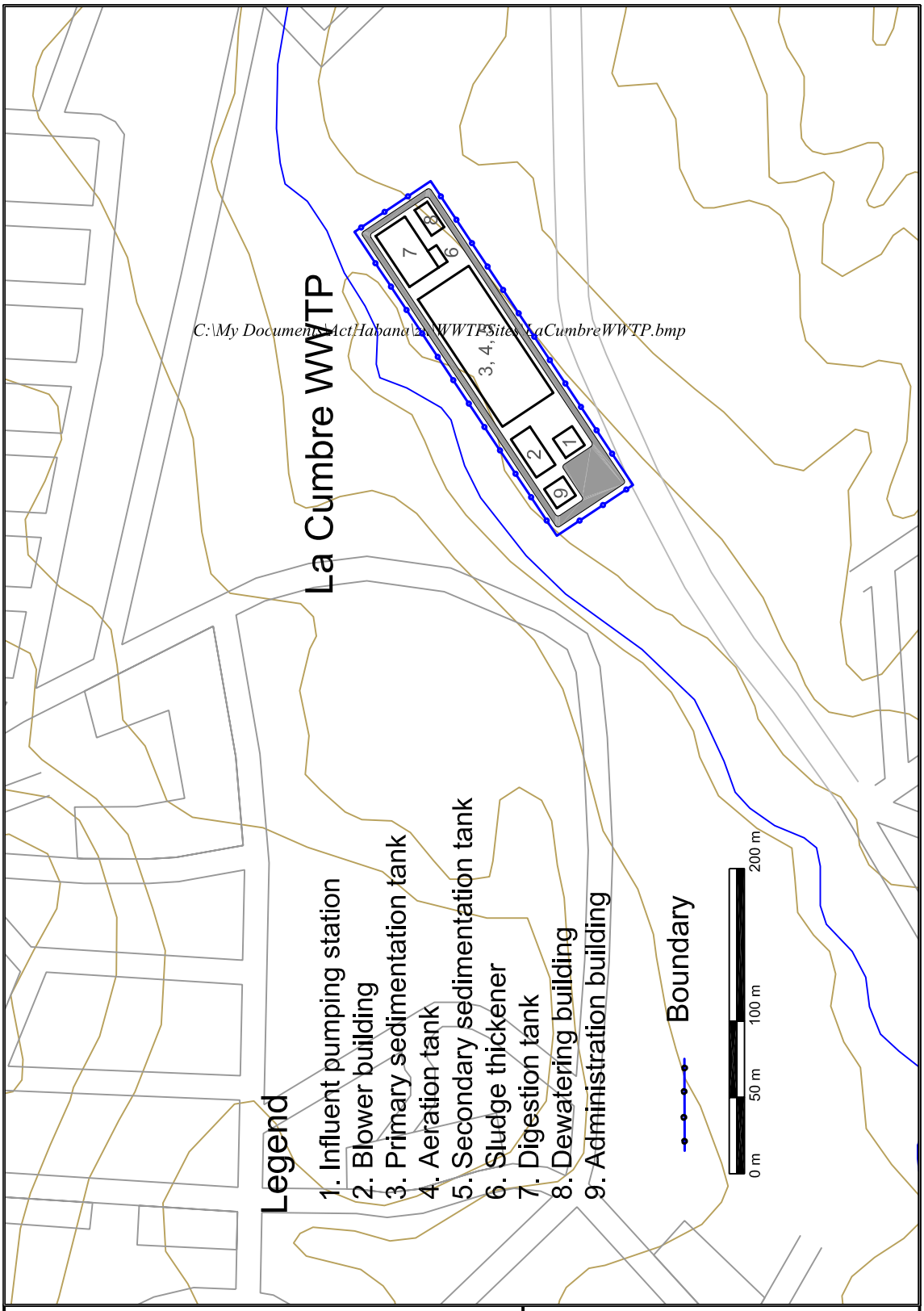


THE DEVELOPMENT STUDY OF THE IMPROVEMENT OF SEWERAGE AND DRAINAGE SYSTEM FOR THE HAVANA BAY

JAPAN INTERNATIONAL COOPERATION AGENCY

Figure A11.15
Layout of La Cumbre WWTP