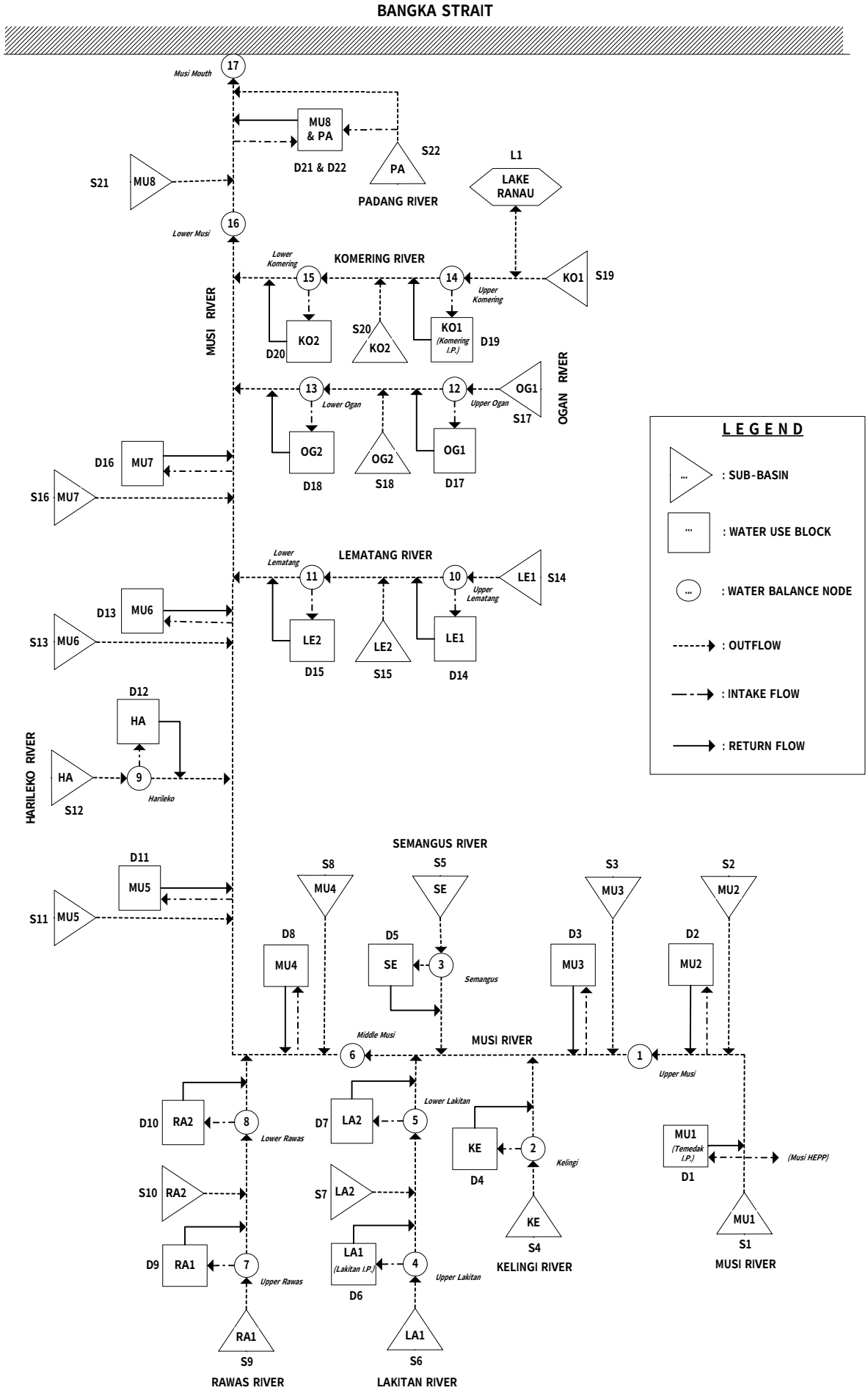

Annex I1.4.1 Schematic Diagram of Water Balance