Appendix A-6

Structural Calculations for Intake Tower

CONTENTS

PAGE

§ 1. GENERAL A.6-2
  1.1 SKETCHES OF STRUCTURE A.6-3
  1.2 SOIL CONDITIONS A.6-3
  1.3 LOADING CONDITIONS A.6-3
  1.4 MATERIALS A.6-3

§ 2. DESIGN OF SECTION FOR MAIN FRAMES A.6-3
  2.1 SECTION I - t= 600, t= 900 (+409.00～+399.80).. A.6-3
  2.2 SECTION II - t= 1,200 (+399.80～+395.20) A.6-4
  2.3 SECTION III - t= 1,500 (+395.20～) A.6-7

§ 3. DESIGN OF FOUNDATIONS A.6-10

§ 4. DESIGN OF BEAMS AND SLABS A.6-14
  4.1 DESIGN OF BEAMS A.6-14
  4.2 DESIGN OF SLABS A.6-17

§ 5. DESIGN OF CENTRAL CORE A.6-19

§ 6. DESIGN OF CUTTING EDGE A.6-20

§ 7. CHECKING FOR STABILITY A.6-21
  7.1 STABILITY OF FLOATATION A.6-21
  7.2 STABILITY OF OVERTURNING A.6-23
  7.3 STABILITY OF SLIDING A.6-25

1. GENERAL

1.1 SKETCHES OF STRUCTURE

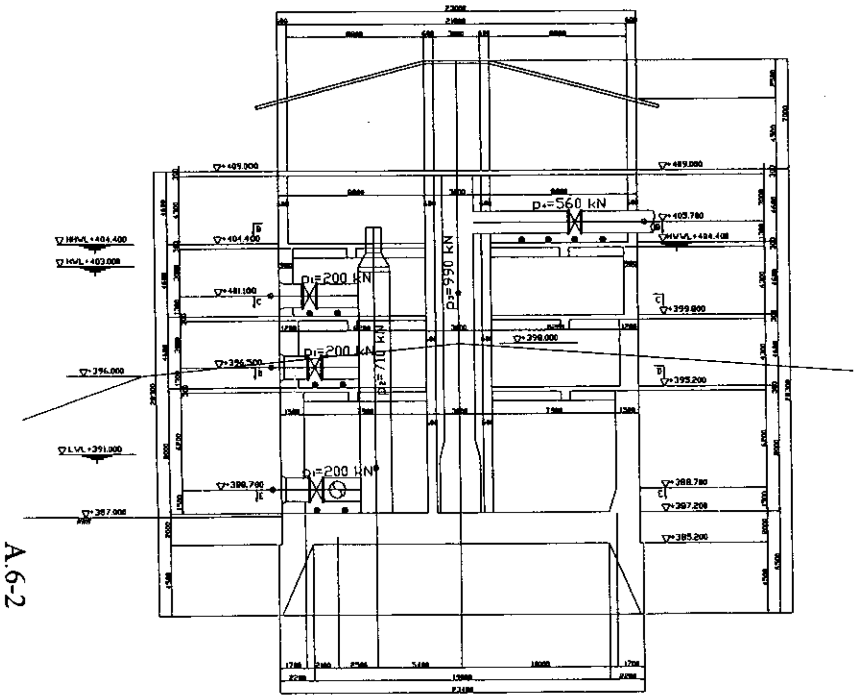

A-A

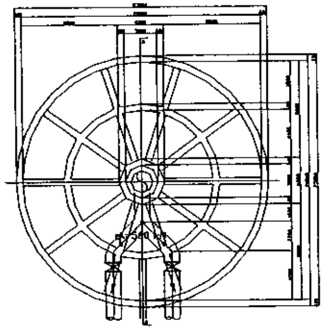

B-B

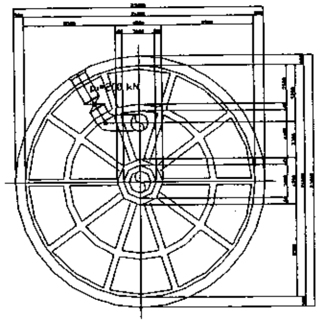

C-C

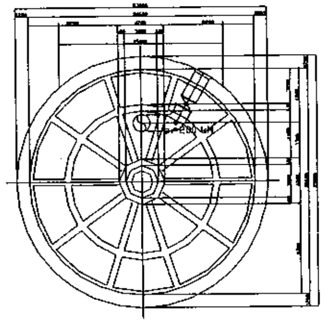

D-D

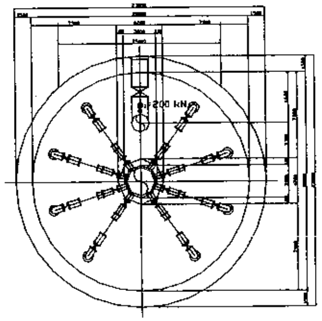

E-E

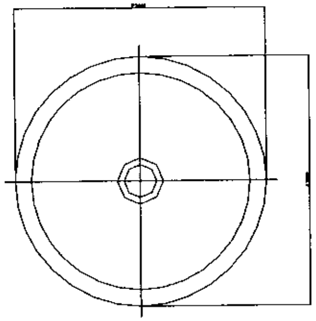

F-F

1.2 SOIL CONDITIONS

Loam sandy (From GEOLOGICAL INVESTIGATIONS ON THE TERRITORY OF VYACHESLAVSKY RESERVOIR)

Coefficient of Earth Pressure at rest :K_0 = 0.50

Unit Weight :γ = 20.0 kN/m^3(wet)

γ = 11.0 kN/m^3(in water)

Internal Friction Angle :$\phi = 5°$

Cohesion :c = 30.0 kN/m^2

1.3 LOADING CONDITIONS

(1) Unit Weighjt

Reinforced condrete :γ_c = 24.0 kN/m^3

Concrete :γ_c' = 23.0 kN/m^3

Water :γ_w = 10.0 kN/m^3

(2) Dead Load

Superstructure :w_u = 2,200 kN

Pipe (with Water) :p_1 = 200.0 kN (Intake Pipe) Support Nr.= 2

:p_2 = 710.0 kN (Intake Header)

p_3 = 990.0 kN (Core)

p_4 = 560.0 kN (Discharge) Support Nr.= 7

Bridge :p_5 = 2,144 kN

(3) Live Load

People and others (BF) :w_l = 5.0 kN/m^2

Vehicle (1F) :P = 200 kN

1.4 MATERIALS

(1) Concrete (σ_{ck}= 30 N/mm^2)

Design Compressive Strength :σ'_{cd} = 23.1 N/mm^2

Modules of elasticity :E_c= 2.8 x 10^4 N/mm^2

Poisson's Ratio :$\upsilon = \frac{1}{6} \approx 0.1667$

(2) Reinforcement Bar (Grade365)

Modules of elasticity :E_s = 2.0 x 10^5 N/mm^2

2. DESIGN OF SECTION FOR MAIN FRAMES

2.1 SECTION I - t= 600, t= 900 (+409.00 - +399.80)

Design for the HHWL (404.4m) at he level of +399.80 m.

(1) Water Pressure

$p_w = \gamma_w h_w$ = 10.0 x (404.40 - 399.80) = 42.0 kN/m

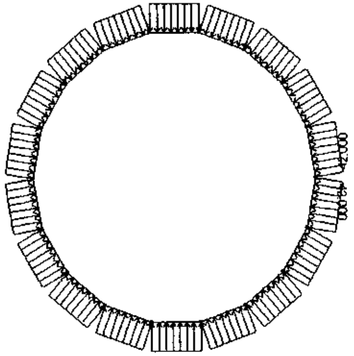

(2) Stress resultant

N = p_w r = 42.0x24.00 = 1,008.0 kN/m

(3) Proportioning of Section

$N'_{oud}= 0.85 f'_{cd} A_c / \gamma_b$

Where: N'_{oud} : Axis Compressive Strength (N)

f'_{cd} :Design Compressive Strength (= 23.1 N/mm^2)

A_c :Sectional area of conctete (mm^2)

γ_b :Member factor (1.3)

From above;

N'_{oud} = 0.85 x 23.1 x (1,000x900) / 1.3

= 13,593,4615 N/m

= 13,593.5 kN/m > N = 1,008.0 kN/m

Therefor re-bar is decided at minimum requirement.

(3) Minimum Re-bar Requirement

Agaist axis load, 0.8% of sectional area of concrete.

(4) From "Proportioning of Section", required sectional area of concrete A_{creq} is;

$$A_{creq} = \frac{Ng_b}{0.85f'_{cd}} = \frac{(1,008.0x10^3)x1.3}{0.85x23.1} = 66,738.0\ mm^2 = 667.4\ cm^2$$

From above, Minimum re-bar requirement A_{sreq} is;

$A_{sreq} = A_{creq}$ x 0.8% = 5.34 cm^2 / m

(5) Adopted

Outer 4 - D13@250 A_s = 5.068 cm^2 / m

Inner 4 - D13@250 A_s = 5.068 cm^2 / m

Total A_s = 10.136 cm^2 / m > A_{sreq} = 5.34 cm^2 / m OK

t = 600(+409.0 - +404.4)

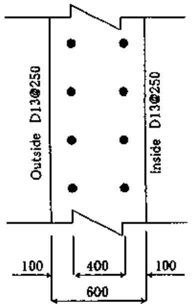

t = 900(+404.4 - +399.8)

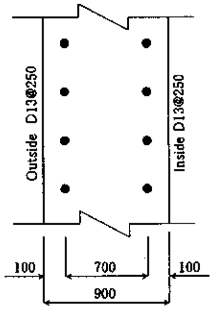

2.2 SECTION II - t= 1,200 (+399.80 - +395.20)

(1) Member

- Material :Reinforced Cpncrete (γ_{ck} = 30 N/mm^2)
- Modules of elasticity :E_c = 2.8 x 10^4 N/mm^2 = 2.8 x 10^7 kN/m^2
- Parameters of Section (per m)

Thickness :t = 1.20 m

Sectional Area :A = 1.20 m^2 / m

Moment of Second Order: I = 0.1440 m^4 / m

(2) Structure Model

- Structure

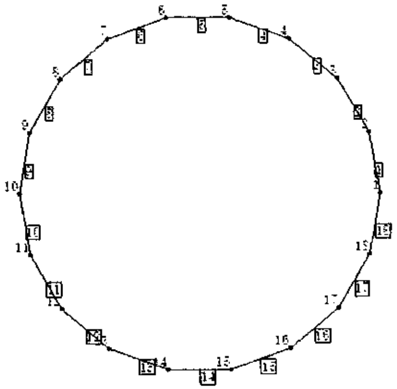

- Data of Panel Point

Panel Point ID.	Coordinate X (m)	Coordinate Y (m)	Panel Point ID.	Coordinate X (m)	Coordinate Y (m)
1	10.9000	0.0000	10	- 10.9000	0.0000
2	10.2426	3.7280	11	- 10.2426	- 3.7280
3	8.3499	7.0064	12	- 8.3499	- 7.0064
4	5.4500	9.4397	13	- 5.4500	- 9.4397
5	1.8928	10.7344	14	- 1.8928	- 10.7344
6	- 1.8928	10.7344	15	1.8928	- 10.7344
7	- 5.4500	9.4397	16	5.4500	- 9.4397
8	- 8.3499	7.0064	17	8.3499	- 7.0064
9	- 10.2426	3.7280	18	10.2426	- 3.7280

- Data of Member

Member ID.	Panel Point ID.		in-plane Joint Condition		out-of-plane Joint Condition	
	end i	end j	end i	end j	end i	end j
1	1	2	0	0	0	0
2	2	3	0	0	0	0
3	3	4	0	0	0	0
4	4	5	0	0	0	0
5	5	6	0	0	0	0
6	6	7	0	0	0	0
7	7	8	0	0	0	0
8	8	9	0	0	0	0
9	9	10	0	0	0	0
10	10	11	0	0	0	0
11	11	12	0	0	0	0
12	12	13	0	0	0	0
13	13	14	0	0	0	0
14	14	15	0	0	0	0
15	15	16	0	0	0	0
16	16	17	0	0	0	0
17	17	18	0	0	0	0
18	18	1	0	0	0	0

in-plane / out-of-planeJoint Condition: 【0】Rigid Joint 【1】Pin Joint

(3) Load

Earth Pressure at +395.20 m and Water Pressure at H.H.W.L

- Earth Pressure

$p = K_0 \gamma h = 0.50 \text{ x } 11.0 \text{ x } (398.00 - 395.20) = 15.4$ kN/m

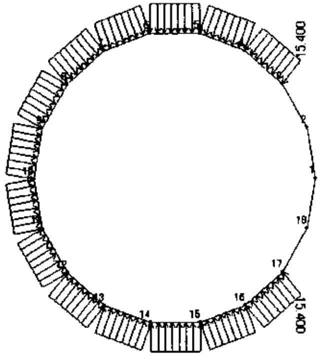

- Water Pressure

$p_w = \gamma_w h_w = 10.0 \text{ x } (404.40 - 395.20) = 92.0$ kN/m

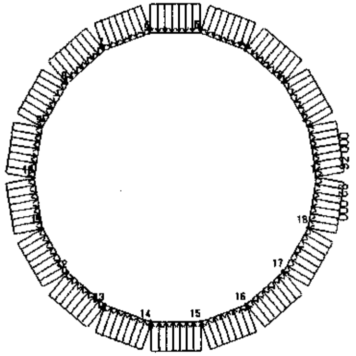

(4) Stress Resultant

From 8. COMPUTER INPUTS AND OUTPUTS 8.1 'SECTION II'

- Bending Moment Diagram

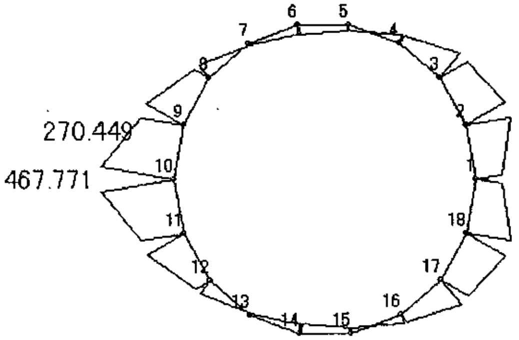

- Shear Strength Diagram

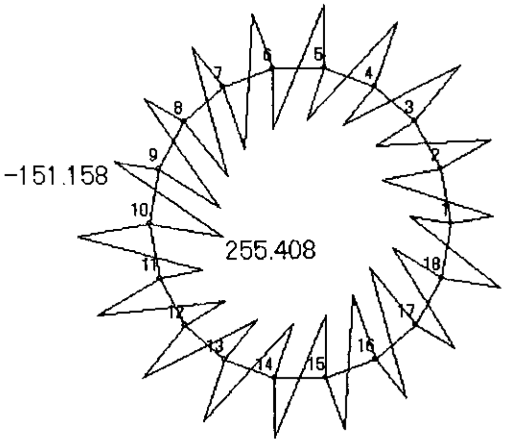

- Axial Force Diagram

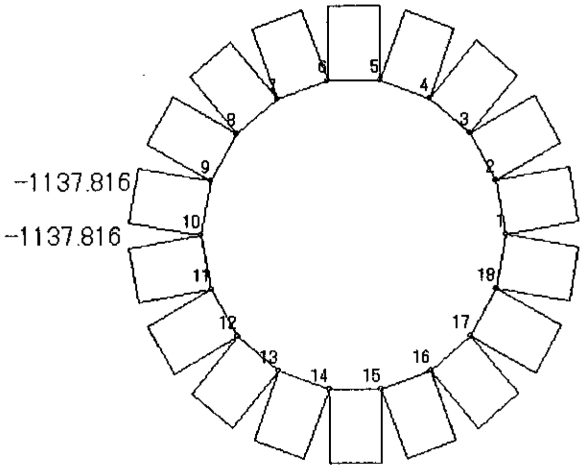

- DesignStress Resultant

Panel Point ID.	M_{max} (kN·m)	N_{max} (kN)	Panel Point ID.	S_{max} (kN)
10	467.8	1,137.8	10	255.4

(5) Design of Section

Section	Wall - 395.2
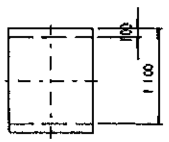	Type / Location (m) / Dia. (mm) / Number / Re-bar AreaAs (cm²): D1 / 0.100 / 16 / 4.000 / 7.944 D1 / 1.100 / 16 / 4.000 / 7.944 Total Re-bar Area Σ 15.888
Beam Width bw (m) 1.0000 Beam Height h (m) 1.2000	《Type》 D:Reinforcement Bar 1:Concrete Depth
Ultimate Limit・Bend. Bending Moment Md(kN・m) 467.80 Axial Force N'd(kN) 1137.80	Ultimate Limit・Bend. Bend.Stress Mud(kN・m) 3042.40 Axial – Stress N'ud(kN) 7399.84 N'oud(kN) 18552.60 γi 1.150 γi・Md / Mud **0.177** **< 1.0 OK**
Ultimate Limit・Shear Shear Strength Vd(kN) 255.40 Web Width bw(cm) 100.00 Effective Height d(cm) 110.00 Negate Moment Mo(kN・m) 227.56 Bending Moment Md(kN・m) 467.80	Ultimate Limit・Shear Shear Stress Vsd(kN) 1230.88 Design Stress Vyd(kN) 1230.88 Fwcd (N/mm2) 6.00 γi 1.15 γi Vd / Vyd **0.239** **< 1.0 OK**
Serviceability Limit Bend. Bend. Moment (kN・m) (Permanent) Mpd 467.80 (Variable) Mrd 0.00 Axial Force (kN) (Permanent) N'pd 1137.80 (Variable) N'rd 0.00	Serviceability Limit Bend. Crack Width (mm) (Design) w1 0.154 (Permanent) w2 0.154 Allowable Crack Width wa 0.350 w1 / wa **0.440** **< 1.0 OK** w2 / wa **0.440** **< 1.0 OK**

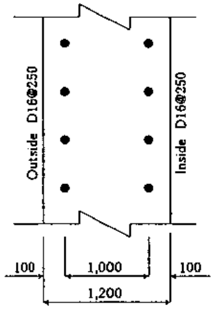

3.3 SECTION III - t= 1,500 (+395.20 -)

(1) Member

- Material :Reionforced Concrete (γ_{ck}= 30 N/mm²)
- Modules of elasticity :E_c= 2.8 x 10^4 N/mm²= 2.8 x 10^7 kN/m²
- Parameters of Section (per m)

  Thickness :t = 1.50 m

  Sectional Area :A = 1.50 m² / m

  Moment of Second Order:I = 0.2813 m⁴ / m

(2) Structure Model

- Structure

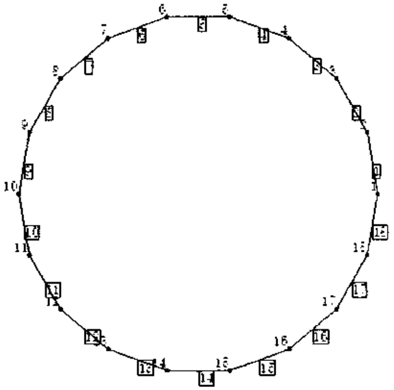

- Data of Panel Point

Panel Point ID.	Coordinate X (m)	Coordinate Y (m)	Panel Point ID.	Coordinate X (m)	Coordinate Y (m)
1	10.7500	0.0000	10	- 10.7500	0.0000
2	10.1017	3.6767	11	- 10.1017	- 3.6767
3	8.2350	6.9100	12	- 8.2350	- 6.9100
4	5.3750	9.3098	13	- 5.3750	- 9.3098
5	1.8667	10.5867	14	- 1.8667	- 10.5867
6	- 1.8667	10.5867	15	1.8667	- 10.5867
7	- 5.3750	9.3098	16	5.3750	- 9.3098
8	- 8.2350	6.9100	17	8.2350	- 6.9100
9	- 10.1017	3.6767	18	10.1017	- 3.6767

- Data of Member

Member ID.	Panel Point ID.		in-plane Joint Condition		out-of-plane Joint Condition	
	end i	end j	end i	end j	end i	end j
1	1	2	0	0	0	0
2	2	3	0	0	0	0
3	3	4	0	0	0	0
4	4	5	0	0	0	0
5	5	6	0	0	0	0
6	6	7	0	0	0	0
7	7	8	0	0	0	0
8	8	9	0	0	0	0
9	9	10	0	0	0	0
10	10	11	0	0	0	0
11	11	12	0	0	0	0
12	12	13	0	0	0	0
13	13	14	0	0	0	0
14	14	15	0	0	0	0
15	15	16	0	0	0	0
16	16	17	0	0	0	0
17	17	18	0	0	0	0
18	18	1	0	0	0	0

□) in-plane / out-of-planeJoint Condition: 【0】Rigid Joint 【1】Pin Joint

(3) Load

- Earth Pressure

$P = K_0 \gamma h = 0.50 \text{ x } 11.0 \text{ x } (398.00 - 387.20) = 59.4$ kN/m

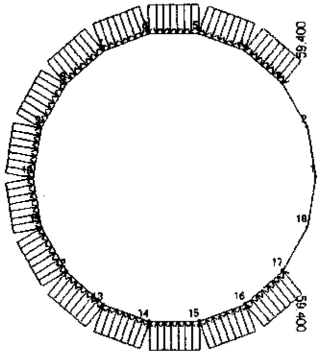

- Water Pressure

$p_w = \gamma_w h_w = 10.0 \text{ x } (404.40 - 387.20) = 172.0$ kN/m

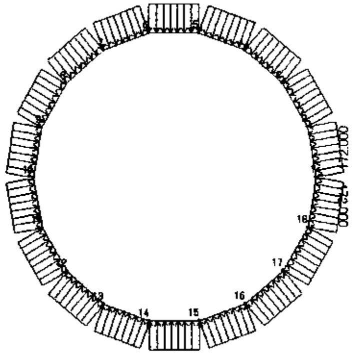

(4) Stress Resultant

From 8. COMPUTER INPUTS AND OUTPUTS 8.2 'SECTION III',

- Bending Moment Diagram

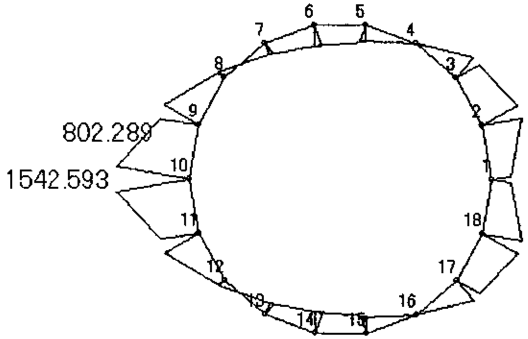

- Shear Strength Diagram

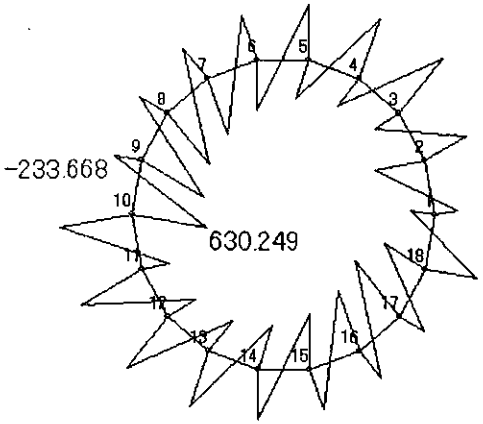

- Axial Force Diagram

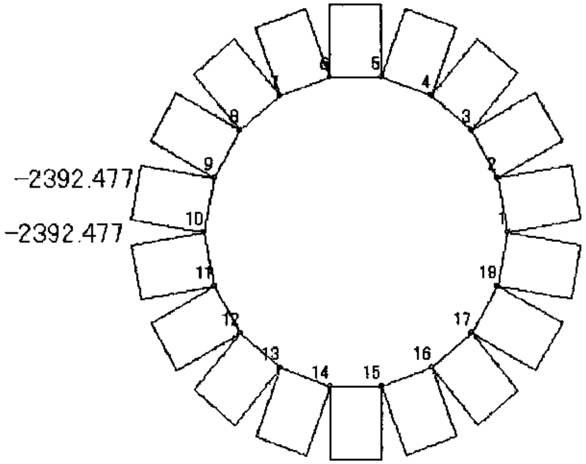

- DesignStress Resultant

Panel Point ID.	M_{max} (kN·m)	N_{max} (kN)	Panel Point ID.	S_{max} (kN)
10	1,542.6	2,392.5	10	630.2

(5) Design of Section

<table>
<tr><td>Section</td><td>Wall - 387.2</td></tr>
<tr><td>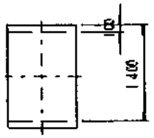

Beam Width bw (m) 1.0000
Beam Height h (m) 1.5000</td><td><table>
<tr><td>Type</td><td>Location (m)</td><td>Dia. (mm)</td><td>Number</td><td>Re-bar AreaAs (cm²)</td></tr>
<tr><td>D1</td><td>0.100</td><td>22</td><td>4.000</td><td>15.484</td></tr>
<tr><td>D1</td><td>1.400</td><td>22</td><td>4.000</td><td>15.484</td></tr>
<tr><td colspan="5">Total Re-bar Area Σ 30.968</td></tr>
</table>《Type》
D:Reinforcement Bar
1:Concrete Depth</td></tr>
<tr><td>Ultimate Limit･Bend.
Bending Moment
Md(kN･m) 1542.60
Axial Force N'd(kN) 2392.50</td><td>Ultimate Limit･Bend.
Bend.Stress Mud(kN･m) 4301.47
Axial – Stress N'ud(kN) 6671.38
N'oud(kN) 23502.62
γi 1.150
γi･Md / Mud 0.412 < 1.0 OK</td></tr>
<tr><td>Ultimate Limit･Shear
Shear Strength Vd(kN) 630.20
Web Width bw(cm) 100.00
Effective Height d(cm) 140.00
Negate Moment
Mo(kN･m) 598.13
Bending Moment
Md(kN･m) 1542.60</td><td>Ultimate Limit･Shear
Shear Stress Vsd(kN) 1566.58
Design Stress Vyd(kN) 1566.58
Fwcd (N/mm2) 6.00
γi 1.15
γi Vd / Vyd 0.463 < 1.0 OK</td></tr>
<tr><td>Serviceability Limit
Bend.
Bend. Moment (kN･m)
(Permanent) Mpd 1542.60
(Variable) Mrd 0.00
Axial Force (kN)
(Permanent) N'pd 2392.50
(Variable) N'rd 0.00</td><td>Serviceability Limit Bend.
Crack Width (mm)
(Design) w1 0.382
(Permanent) w2 0.382
Allowable Crack Width
wa 0.400
w1 / wa 0.955 < 1.0 OK
w2 / wa 0.955 < 1.0 OK</td></tr>
</table>

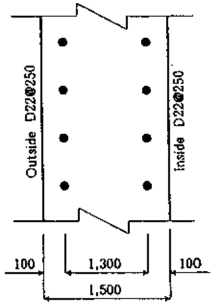

3. DESIGN OF FOUNDATIONS

Design was done for circular slab fixed with Wall of caisson.

(1) Calculation formula

･Distrubuted Load -1

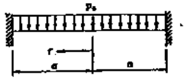

$$M_r=\frac{p_0a^2}{16}\left[(1+\nu)-(3+\nu)\left(\frac{r}{a}\right)^2\right]$$

Poisson's Ratio: $\nu=0.667$ (concrete)

･Distributed Load -2

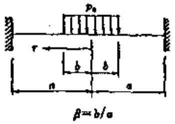

$0\leq r\leq b$

$$M_r=\frac{p_0b^2}{16}\left[(1+\nu)(\beta^2-4\log\beta)-\frac{3+\nu}{\beta^2}\left(\frac{r}{a}\right)^2\right]$$

$b\leq r\leq a$

$$M_r=\frac{p_0b^2}{16}\left[-4+(1-\nu)\beta^2\left(\frac{a}{r}\right)^2+(1+\nu)\left(\beta^2-4\log\frac{r}{a}\right)\right]$$

･Line Load

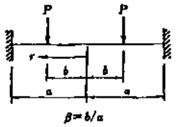

$0\leq r\leq b$

$$M_r=-\frac{Pa\beta}{4}(1+\nu)(1-\beta^2+2\log\beta)$$

$b\leq r\leq a$

$$M_r=-\frac{Pa\beta}{4}\left[2-(1-\nu)\beta^2\left(\frac{a}{r}\right)^2-(1+\nu)\left(\beta^2-2\log\frac{r}{a}\right)\right]$$

β =b/a

Poisson's Ratio: $\nu=0.667$ (concrete)

(2) Load

·Distributed Load (Dead Load + Live Load)

Base Slab Dead Load $w_d = \gamma_c\, t$ = 24.0 x 2.00 = 48.0

Dead Load w_l = 5.0

Total p_0 = 53.0 kN/m^2

·Line Load (Tower Wall : +408.7 - +387.2)

Total Load

Fropm 5. DESIGN OF CENTRAL CORE (1);

N = 10,343.1 kN

Tower Perimeter Length

U = π d=π x 3.6= 11.31 m

Load

P = N/U= 10,343.1 / 11.31= 914.5 kN/m

·Distributed Load (Water in Core)

$p_w = \gamma_w\, h_w$ = 10.0 x 20.0 = 200.0 kN/m^2

h_w = (+407.2) - (+387.2) = 20.0 m

·Distributed Load (Uplift force)

HHWL

$p_w = \gamma_w\, h_w$ = 10.0 x 19.2 = 192.0 kN/m^2

h_w= (+404.4) - (+385.2)= 19.2 m

LWL

$p_w = \gamma_w\, h_w$ = 10.0 x 5.8 = 58.0 kN/m^2

h_w= (+391.0) - (+385.2)= 5.8 m

(3) Stress Resultant

1) Distributed Load (Dead Load + Live Load)

·Perimeter Part

From (1) Calculation formula Distributed Load –1, Moment of Perimeter Part is (r= a= 10.0 m);

$$M_{a1} = \frac{p_0 \cdot a^2}{16} \cdot \left[(1+\nu)-(3+\nu) \cdot \left(\frac{r}{a}\right)^2 \right]$$

$$= \frac{53.0\text{x}10.0^2}{16} \text{ x } \left[(1+0.1667)-(3+0.1667)\text{x}\left(\frac{10.0}{10.0}\right)^2 \right]$$

$$= -\ 662.5 \text{ kN} \cdot \text{m / m}$$

·Shearing Force

$$S_{a1} = \frac{p_0 \cdot A}{L} = \frac{53.0\text{x}(\text{p}\text{x}10.0^2)}{2\text{xpx}10.0} = 265.0 \text{ kN/m}$$

·Central Part

From (1) Calculation formula Distributed Load –1, Moment of Central Part is (r= 0.0m, a= 10.0 m);

$$M_{01} = \frac{p_0\, a^2}{16} \cdot \left[(1+\nu)-(3+\nu) \cdot \left(\frac{r}{a}\right)^2 \right]$$

$$= \frac{53.0\text{x}10.0^2}{16} \text{ x } \left[(1+0.1667)-(3+0.1667)\text{x}\left(\frac{0.0}{10.0}\right)^2 \right]$$

$$= 386.5 \text{ kN} \cdot \text{m / m}$$

2) Line Load (Tower Wall: +408.7 - +387.2)

·Perimeter Part

From (1) Calculation formula Line Load, Moment of Perimeter Part is (r= a= 10.0 m);

$$M_{a2} = -\ \frac{Pa\beta}{4} \left[2-(1-\nu)\beta^2\left(\frac{a}{r}\right)^2 -(1+\nu)\left(\beta^2-2\log \frac{r}{a}\right) \right]$$

$$= -\ \frac{914.5\text{x}10.0\text{x}0.18}{4}(2 - 0.027 - 0.038)$$

$$= -\ 796.3 \text{ kN} \cdot \text{m / m}$$

β = b / a= 1.8 / 10.0= 0.18

$(1-\nu)\beta^2\left(\frac{a}{r}\right)^2 = (1 - 0.1667) \text{ x } 0.18^2 \text{ x } \left(\frac{10.0}{10.0}\right)^2 = 0.027$

$(1+\nu)\left(\beta^2-2\log \frac{r}{a}\right) = (1+0.1667) \text{ x } \left(0.18^2-2 \times \log \frac{10.0}{10.0}\right) = 0.038$

·Shearing Force

$$S_{a2} = \frac{P1}{L} = \frac{914.5\text{x}(\text{px}3.6)}{2\text{xpx}10.0} = 164.6 \text{ kN/m}$$

- Central Part

From (1) Calculation formula Line Load, Moment of Central part is (r= 0.0m, a= 10.0 m);

$$M_{02} \quad = - \frac{Pa\beta}{4}(1+\nu)(1-\beta^2+2\log\beta)$$

$$= \frac{914.5x10.0x0.18}{4} \text{ x } 1.1667 \text{ x } (- 0.522)$$

$= 250.6$ kN·m / m

$\beta = b / a = 1.8 / 10.0 = 0.18$

$1+\nu = 1 + 0.1667 = 1.1667$

$1 - \beta^2 + 2 \log\beta = 1 - 0.18^2 + 2 \log 0.18 = - 0.522$

3) Distributed Load (Water in Core)

- Perimeter Part

From (1) Calculation formula Distributed Load –2, Moment of Perimeter Part is (r= a= 10.0 m);

$$M_{a1} = \frac{p_w b^2}{16} \cdot \left[-4+(1-\nu)\beta^2 \left(\frac{a}{r}\right)^2 +(1+\nu)(\beta^2 - 4\log\frac{r}{a}) \right]$$

$$= \frac{200.0x1.5^2}{16} \text{ x } (- 4+0.0187+0.0263)$$

$= - 111.2$ kN·m / m

$\beta = b / a = 1.5 / 10.0 = 0.15$

$(1 - \nu)\beta^2\left(\frac{a}{r}\right)^2 = (1 - 0.1667) \text{ x } 0.15^2 \text{ x } \left(\frac{10.0}{10.0}\right)^2 = 0.0187$

$(1+\nu)\left(\beta^2\text{-}4\log \frac{r}{a}\right) = (1+0.1667) \text{ x } \left(0.15^2\text{-}4\text{x}\log \frac{10.0}{10.0}\right) = 0.0263$

- Shearing Force

$$S_{a1} = \frac{p_w A}{L} = \frac{200.0x(px1.5^2)}{2xpx10.0} = 0.20 \text{ kN/m}$$

- Central Part

From (1) Calculation formula Distributed Load –2, Moment of Central part is (r= 0.0m, a= 10.0 m);

$$M_{a1} = \frac{p_w b^2}{16} \cdot \left[(1+\nu)(\beta^2\text{-}4\log\beta)\text{-}\frac{3+\nu}{\beta^2}\left(\frac{r}{a}\right)^2 \right]$$

$$= \frac{200.0x1.5^2}{16} \text{ x } (3.871 - 0.0)$$

$= 1.1$ kN·m / m

$\beta = b / a = 1.5 / 10.0 = 0.15$

$(1 + \nu)(\beta^2 - 4 \log\beta) = (1 + 0.1667) \text{ x } (0.15^2 - 4 \text{ x } \log 0.15) = 3.871$

$\frac{3+\nu}{\beta^2}\left(\frac{r}{a}\right)^2 = \frac{3+0.1667}{0.15^2}\left(\frac{0.0}{10.0}\right)^2 = 0.0$

4) Distributed Load (Uplift Load)

In case of HHWL

- Perimeter Part

From (1) Calculation formula Distributed load –1, Moment of Perimeter Part is (r= a= 10.0 m);

$$M_{a1} = \frac{p_w a^2}{16} \cdot \left[(1+\nu)\text{-}(3+\nu) \left(\frac{r}{a}\right)^2 \right]$$

$$= \frac{-192.0x10.0^2}{16} \text{ x } \left[(1+0.1667)\text{-}(3+0.1667)\text{x}\left(\frac{10.0}{10.0}\right)^2 \right]$$

$= 2,400.0$ kN·m / m

- Shearing Force

$$S_{a1} = \frac{p_w A}{L} = \frac{-192.0x(px10.0^2)}{2xpx10.0} = - 960.0 \text{ kN/m}$$

- Central Part

From (1) Calculation formula Distributed Load –1, Moment of Central part is (r= 0.0m, a= 10.0 m);

$$M_{01} \quad = \frac{p_w a^2}{16} \left[(1+\nu)\text{-}(3+\nu) \left(\frac{r}{a}\right)^2 \right]$$

$$= \frac{-192.0x10.0^2}{16} \text{ x } \left[(1+0.1667)\text{-}(3+0.1667)\text{x}\left(\frac{0.0}{10.0}\right)^2 \right]$$

$= - 1,400.0$ kN·m / m

In case of LWL

- Perimeter Part

From (1) Calculation formula Distributed load –1, Moment of Perimeter Part is (r= a= 10.0 m);

$$M_{a1} = \frac{p_w a^2}{16} \cdot \left[(1+\nu)\text{-}(3+\nu) \left(\frac{r}{a}\right)^2 \right]$$

$$= \frac{-58.0 \times 10.0^2}{16} \text{ x } \left[(1+0.1667) - (3+0.1667) \times \left(\frac{10.0}{10.0}\right)^2 \right]$$

$= 725.0$ kN·m / m

- Shearing Force

$$S_{a1} = \frac{p_w A}{L} = \frac{-58.0x(px10.0^2)}{2xpx10.0} = - 290.0 \text{ kN/m}$$

- Central Part

From (1) Calculation formula Distributed Load –1, Moment of Central part is (r= 0.0m, a= 10.0 m);

$$M_{01} \quad = \frac{p_w a^2}{16} \left[(1+\nu)\text{-}(3+\nu) \left(\frac{r}{a}\right)^2 \right]$$

$$= \frac{-58.0x10.0^2}{16} \text{ x } \left[(1+0.1667)\text{-}(3+0.1667)\text{x}\left(\frac{0.0}{10.0}\right)^2 \right]$$

$= - 422.9$ kN·m / m

(4) Stress Resultant

Load		M (kN·m / m)		S (kN/m)
		Perimeter Part	Central part	
Load (Downward)	Distributed load (Dead+Live)	- 662.5	386.5	265.0
	Line Load (Tower wall)	- 796.3	1.1	0.2
	Distributed load (Water in tower)	- 111.2	250.6	164.6
	Sub total	- 1570.0	638.2	429.8
Uplift (upward)	HHWL	2,400.0	- 1,400.0	- 960.0
	LWL	725.0	- 422.9	- 290.0
Total		830.0 - 845.0	- 761.8 215.3	- 530.2 139.8

DesignStress Resultant

M_{max} = - 845.0 kN·m / m

S_{max} = - 530.2 kN/m

(5) Design of Section

<table>
<tr><td>Section</td><td>Base</td></tr>
<tr><td>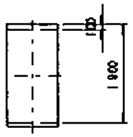</td><td rowspan="2"><table>
<tr><td>Type</td><td>Location (m)</td><td>Dia. (mm)</td><td>Number</td><td>Re-bar AreaAs (cm²)</td></tr>
<tr><td>D1</td><td>0.100</td><td>32</td><td>4.000</td><td>31.768</td></tr>
<tr><td>D1</td><td>1.900</td><td>32</td><td>4.000</td><td>31.768</td></tr>
<tr><td colspan="5">Total Re-bar Area Σ 63.536</td></tr>
</table>
《Type》
D:Reinforcement Bar
1:Concrete Depth</td></tr>
<tr><td>Beam Width bw (m) 1.0000
Beam Height h (m) 2.0000</td></tr>
<tr><td>Ultimate Limit·Bend.
Bending Moment
Md(kN·m) 845.00
Axial Force N'd(kN) 111.00</td><td>Ultimate Limit·Bend.
Bend.Stress Mud(kN·m) 2148.95
Axial – Stress N'ud(kN) 282.29
N'oud(kN) 31961.41
γi 1.150
γi·Md / Mud 0.452 < 1.0 OK</td></tr>
<tr><td>Ultimate Limit·Shear
Shear Strength Vd(kN) 530.20
Web Width bw(cm) 100.00
Effective Height d(cm) 190.00
Negate Moment
Mo(kN·m) 37.00
Bending Moment
Md(kN·m) 845.00</td><td>Ultimate Limit·Shear
Shear Stress Vsd(kN) 2126.07
Design Stress Vyd(kN) 2126.07
Fwcd (N/mm2) 6.00
γi 1.15
γi Vd / Vyd 0.287 < 1.0 OK</td></tr>
<tr><td>Serviceability Limit
Bend.
Bend. Moment (kN·m)
(Permanent) Mpd 845.00
(Variable) Mrd 0.00
Axial Force (kN)
(Permanent) N'pd 111.00
(Variable) N'rd 0.00</td><td>Serviceability LimitBend.
Crack Width (mm)
(Design) w1 0.444
(Permanent) w2 0.444
Allowable Crack Width
wa 0.500
w1 / wa 0.888 < 1.0 OK
w2 / wa 0.888 < 1.0 OK</td></tr>
</table>

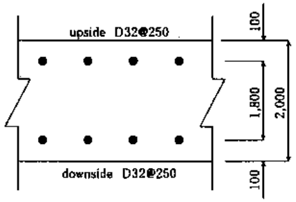

4. DESIGN OF BEAMS AND SLABS

4.1 DESIGN OF BEAMS

Design was done as a grillage structure with out-of-plane load.

4.1.1 Member

- Material :Reionforced Concrete (σ_{ck}= 30 N/mm^2)
- Modules of elasticity :E_c= 2.8 x 10^4 N/mm^2= 2.8 x 10^7 kN/m^2
- Parameters of Section

Member height :H = 0.90 m

Member width :B = 0.60 m (straight and ring beams)

Sectional Area :A = 0.54 m^2 / m

Moment of Second Order:I = 0.0365 m^4 / m

4.1.2 Structure Model

- Bopundary Copndition

Joint with Outer Wall and Core :Fixed Support

Joint with next beam :Flexible Support

- Structure

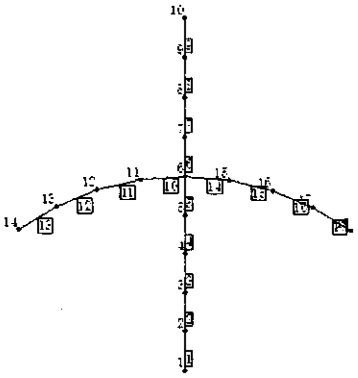

- Data of Panel Point

Panel Point ID.	Coordinate X (m)	Coordinate Y (m)	Panel Point ID.	Coordinate X (m)	Coordinate Y (m)
1	0.0000	2.1000	10	0.0000	10.6000
2	0.0000	3.0400	11	- 1.0638	6.7163
3	0.0000	3.9800	12	- 2.1013	6.4672
4	0.0000	4.9200	13	- 3.0871	6.0588
5	0.0000	5.8600	14	- 3.9969	5.5013
6	0.0000	6.8000	15	1.0638	6.7163
7	0.0000	7.7500	16	2.1013	6.4672
8	0.0000	8.7000	17	3.0871	6.0588
9	0.0000	9.6500	18	3.9969	5.5013

- Data of Member

Member ID.	Panel Point ID.		in-plane Joint Condition		out-of-plane Joint Condition	
	end i	end j	end i	end j	end i	end j
1	1	2	0	0	0	0
2	2	3	0	0	0	0
3	3	4	0	0	0	0
4	4	5	0	0	0	0
5	5	6	0	0	0	0
6	6	7	0	0	0	0
7	7	8	0	0	0	0
8	8	9	0	0	0	0
9	9	10	0	0	0	0
10	6	11	0	0	0	0
11	11	12	0	0	0	0
12	12	13	0	0	0	0
13	13	14	0	0	0	0
14	6	15	0	0	0	0
15	15	16	0	0	0	0
16	16	17	0	0	0	0
17	17	18	0	0	0	0

in-plane / out-of-planeJoint Condition: 【0】Rigid Joint 【1】Pin Joint

- Spring constant

Panel Point ID.14 and 18 is examined assuming radius beam is elastic bearing.

Member length : l = 8.50 m

Modules of elasticity : E = 2.80 x 10^7 kN/m^2

Moment of Second Order : I = 0.0365 m^4

Maximum Displacement is applied with P= 100.0 kN.

$$\delta_{max} = \frac{2\,P\,a^3\,b^2}{3\,E\,I\,(3\,a+b)^2}$$

$$= \frac{2x100.0x4.70^3x3.80^2}{3x(2.80x10^7)x0.0365x(3x4.70+3.80)^2}$$

$$= 3.050 \text{ x } 10^{-4} \text{ m}$$

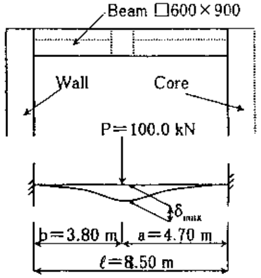

Therefore;

$$K_V = \frac{P}{d_{max}} = \frac{100.0}{3.050x10^{-4}} = 327{,}900 \text{ kN/m}$$

4.1.3 Load

- Beam Dead Load

A 0.30m part of Beam Height 0.90 m is accountedas load of slab.

$w_1 = \gamma_c A = 24.0 \times \{0.60 \times (0.90 - 0.30)\} = 8.6$ kN/m

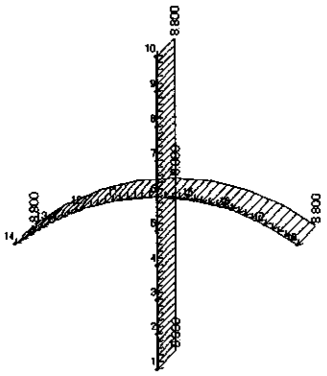

- Slab load and People Load

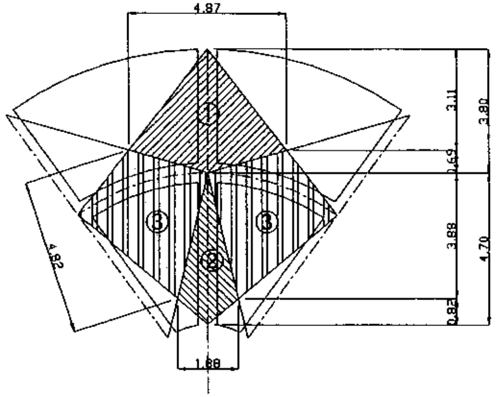

From above;

1 :$w_{21}= (\gamma_c \cdot t + w_l)\, l = (24.0 \times 0.30 + 5.0) \times 4.87 = 59.4$ kN/m

2 :$w_{22}= (\gamma_c \cdot t + w_l)\, l = (24.0 \times 0.30 + 5.0) \times 1.88 = 22.9$ kN/m

3 :$w_{21}= (\gamma_c \cdot t + w_l)\, l = (24.0 \times 0.30 + 5.0) \times 4.82 = 58.8$ kN/m

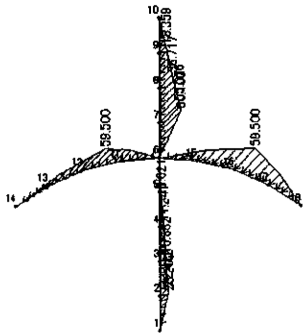

- Dead Load (BF)

$w_3= p_5 / n= 560.0 / 7= 80.0$ kN

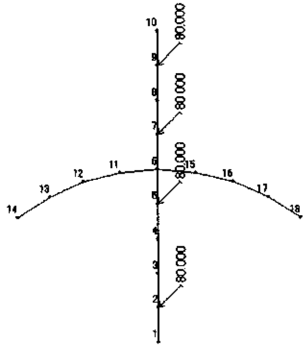

·Vehicle Load (1F)

P= 200.0 kN

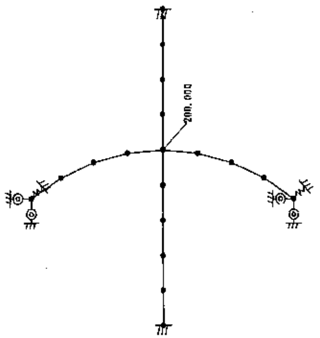

4.1.4 Combined Load

Case - 1:Dead Load + People Load + Dead Load

Case - 2:Dead Load + People Load + Vehicle Load

4.1.5 Stress Resultant

From 8. COMPUTER INPUTS AND OUTPUTS 8.3 'BEAMS';

- Bending Moment Diagram

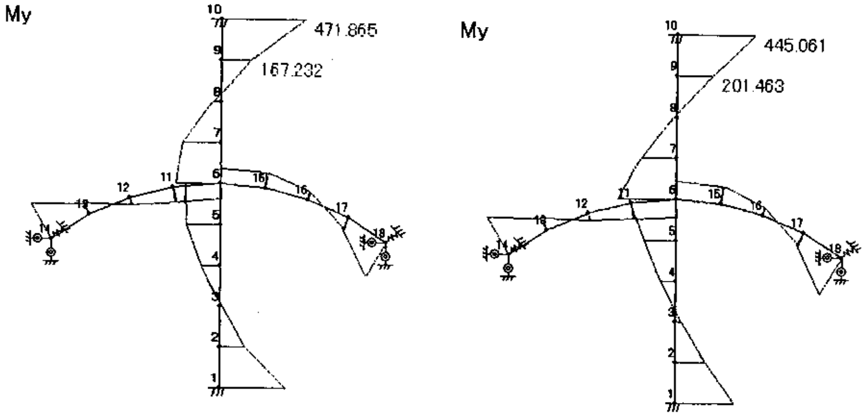

Case - 1

Case - 2

- Shear Strength Diagram

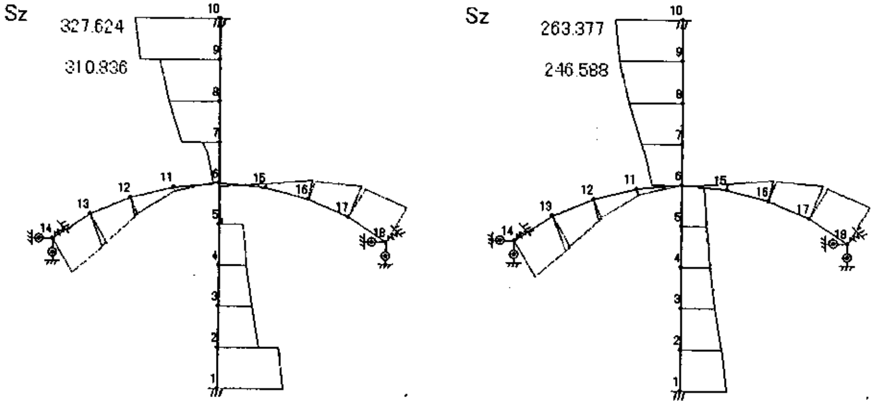

Case - 1

Case - 2

- DesignStress Resultant

Panel Point ID.	M_{max} (kN·m)	Panel Point ID.	S_{max} (kN)
10	471.9	10	327.6

4.1.6 Design of Section

<table>
<tr><td>Section</td><td>Beam</td></tr>
<tr><td>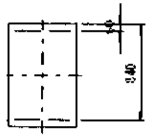 </td><td><table><tr><td>Type</td><td>Location (m)</td><td>Dia. (mm)</td><td>Number</td><td>Re-bar AreaAs (cm²)</td></tr><tr><td>D1</td><td>0.060</td><td>32</td><td>3.000</td><td>23.826</td></tr><tr><td>D1</td><td>0.840</td><td>32</td><td>3.000</td><td>23.826</td></tr><tr><td colspan="5">Total Re-bar Area Σ 47.652</td></tr></table>《Type》
D:Reinforcement Bar
1:Concrete Depth</td></tr>
<tr><td>Beam Width bw (m) 0.6000
Beam Height h (m) 0.9000</td><td></td></tr>
<tr><td>Ultimate Limit·Bend.
Bending Moment
Md(kN·m) 471.90
Axial Force N'd(kN) 0.00</td><td>Ultimate Limit·Bend.
Bend.Stress Mud(kN·m) 607.73
Axial – Stress N'ud(kN) 0.00
N'oud(kN) 9485.85
γi 1.150
γi·Md / Mud 0.893 < 1.0 OK</td></tr>
<tr><td>Ultimate Limit·Shear
Shear Strength Vd(kN) 327.60
Web Width bw(cm) 60.00
Effective Height d(cm) 84.00
Negate Moment
Mo(kN·m) 0.00
Bending Moment
Md(kN·m) 471.90</td><td>Ultimate Limit·Shear
Shear Stress Vsd(kN) 939.95
Design Stress Vyd(kN) 939.95
Fwcd (N/mm2) 6.00
γi 1.15
γi Vd / Vyd 0.401 < 1.0 OK</td></tr>
</table>

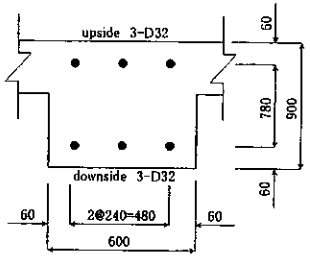

4.2 DESIGN OF SLABS

Design was done by converting the slab surrounded by beams and walls to equivalent area rectangular slab with fixed peripheral edges.

4.2.1 Design of 1F Slab

(1) Calculation formula

$$M\upsilon_2 = \frac{(1-\upsilon_1 \upsilon_2)\, M\upsilon_1 + (\upsilon_2-\upsilon_1)\, M\upsilon_1}{1-\upsilon_1^2}$$

ここに, υ_1, υ_2 :Poisson's Ratio (υ_1= 0.3, υ_2= 0.1667: Concrete)

$M\upsilon_2$: Moment for Poisson's Ratio υ_2 (kN m/m)

$M\upsilon_1$: Moment for Poisson's Ratio υ_1 (kN m/m)

Moment Calculation formula in case of Poisson's Ratio: υ= 0.3 is shown in Tables 4.2-1 and 4.2-2.

Table 4.2-1 Moment of Fixed Peripheral Edges Rectangular Slab with Uniform Load

等分布荷重を受ける4辺固定板のたわみおよびモーメント（ν=0.3）1)

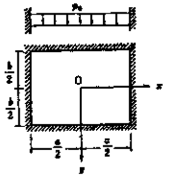

b/a	$(w)_{x=0,y=0}$	係 数	$(M_x)_{x=a/2,y=0}$	$(M_y)_{x=0,y=b/2}$	$(M_x)_{x=0,y=0}$	$(M_y)_{x=0,y=0}$	係 数
1.0	0.00126	p_0a^4/D	−0.0513	−0.0513	0.0231	0.0231	p_0a^2
1.1	0.00150	p_0a^4/D	−0.0581	−0.0538	0.0264	0.0231	p_0a^2
1.2	0.00172	p_0a^4/D	−0.0639	−0.0554	0.0299	0.0228	p_0a^2
1.3	0.00191	p_0a^4/D	−0.0687	−0.0563	0.0327	0.0222	p_0a^2
1.4	0.00207	p_0a^4/D	−0.0726	−0.0568	0.0349	0.0212	p_0a^2
1.5	0.00220	p_0a^4/D	−0.0757	−0.0570	0.0368	0.0203	p_0a^2
1.6	0.00230	p_0a^4/D	−0.0780	−0.0571	0.0381	0.0193	p_0a^2
1.7	0.00238	p_0a^4/D	−0.0799	−0.0571	0.0392	0.0182	p_0a^2
1.8	0.00245	p_0a^4/D	−0.0812	−0.0571	0.0401	0.0174	p_0a^2
1.9	0.00249	p_0a^4/D	−0.0822	−0.0571	0.0407	0.0165	p_0a^2
2.0	0.00254	p_0a^4/D	−0.0829	−0.0571	0.0412	0.0158	p_0a^2
∞	0.00260	p_0a^4/D	−0.0833	−0.0571	0.0417	0.0125	p_0a^2

Table 4.2-2 Moment of Fixed Peripheral Edges Rectangular Slab with Concentrated Load

集中荷重を受ける4辺固定板のたわみとモーメント（ν=0.3）1)

$\frac{b}{a}$	$(w)_{x=y=0}=\alpha Pa^2/D$ α	$(M_x)_{x=a/2,y=0}=\gamma P$ γ
1.0	0.00560	−0.1257
1.2	0.00647	−0.1490
1.4	0.00691	−0.1604
1.6	0.00712	−0.1651
1.8	0.00720	−0.1667
2.0	0.00722	−0.1674
∞	0.00725	−0.168

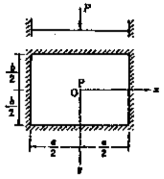

(2) Load

- Distributed load

SlabDead Load w= γ_c t= 24.0 x 0.30 = 7.2

Live Load w = 5.0

Total p_0 = 12.2 kN/m^2

- Concentrated Load

Vehicle Load

P= 200.0 kN

(3) Stress Resultant

- Edge Length

Short edge :a = 3.50 m

Long edge :b = $\frac{6.05+3.86}{2}$ = 4.96 m

- Bending Moment

From (1) Calculation formula, Moment of short edge part is;

By Distributed load Moment:M_1 = - 0.0726 p_0 a^2

By Concentrated load Moment:M_2 = - 0.1604 P

Aspect ratio $\frac{b}{a} = \frac{4.96}{3.50}$ =1.4

Poisson's Ratio:υ= 0.3

Therefore;

$M_{0.3}$ = (- 0.0726 p_0 a^2)+(- 0.1604 P)

= - 0.0726 x 12.2 x 3.50^2 - 0.1604 x 200.0

= - 42.9 kN·m / m

Moment for υ= 0.1667 (concrete) is;

$$M = \frac{(1-\nu_1\, \nu_2)\cdot M\upsilon_1+(\nu_2-\nu_1)\cdot M\upsilon_1}{1-\nu_1^2}$$

$$= - \frac{(1-0.1667x0.3)x42.9+(0.3-0.1667)x42.9}{1-0.1667^2}$$

= - 47.8 kN·m / m

- Shearing Force

$$S= \frac{p_0\,A+P}{l} = \frac{12.2x(4.96x3.50)+200.0}{2x(4.96+3.50)} = 24.3 \text{ kN/m}$$

(4) Design of Section

Section		Slab - 1F		
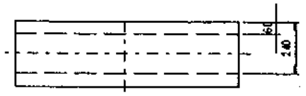
Type	Location (m)	Dia. (mm)	Number	Re-bar AreaAs (cm^2)
D1	0.060	16	4.000	7.944
D1	0.240	16	4.000	7.944
Total of Re-bar Area				Σ 15.888

《Type》
D:Reinforcement Bar
1:Concrete Depth

Beam Width bw (m)	1.0000			
Beam Height h (m)	0.3000			
Ultimate Limit･Bend.		Ultimate Limit･Bend.		
Bending Moment		Bend.Stress Mud(kN･m)	67.98	
Md(kN･m)	47.80	Axial – Stress N'ud(kN)	0.00	
Axial Force N'd(kN)	0.00	N'oud(kN)	4972.71	
		γi	1.150	
		γi･Md / Mud	**0.809**	**< 1.0 OK**
Ultimate Limit･Shear		Ultimate Limit･Shear		
Shear Strength Vd(kN)	24.30	Shear Stress Vsd(kN)	420.96	
Web Width bw(cm)	100.00	Design Stress Vyd(kN)	420.96	
Effective Height d(cm)	24.00	Fwcd (N/mm^2)	6.00	
Negate Moment		γi	1.15	
Mo(kN･m)	0.00	γi Vd / Vyd	**0.066**	**< 1.0 OK**
Bending Moment				
Md(kN･m)	47.80			

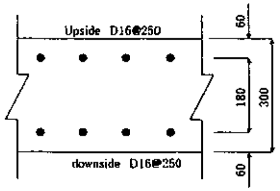

4.2.2 Design of BF Slab

(1) Calculation formula

Same as 4.2.1 Design of 1F Slab.

(2) Load

- Distributed Load

Slab Dead Load	$w = \gamma_c\, t = 24.0 \times 0.30$	= 7.2
Live load	w	= 5.0
Total	p_0	= 12.2 kN/m^2

- Concentrated load

Pipe Load

P= 100.0 kN

(3) Stress Resultant

- Edge length

Short edge: a= 3.50 m

Long edge: $b = \dfrac{6.05+3.86}{2} = 4.96$ m

- Bending Moment

From (1) Calculation formula, Moment of short edge part is;

By Distributed load Moment:$M_1 = -\,0.0072 6\cdot p_0\cdot a^2$

By Concentrated load Moment:$M_2 = -\,0.1604\cdot P$

Aspect ratio $:\dfrac{b}{a} = \dfrac{4.96}{3.50} \fallingdotseq 1.4$

Poisson's Ratio:$\upsilon = 0.3$

Therefore;

$$M_{0.3} = (-\,0.0726\cdot p_0\cdot a^2)+(-\,0.1604\cdot P)$$
$$= -\,0.0726 \times 12.2 \times 3.50^2 - 0.1604 \times 100.0$$
$$= -\,26.9\ kN\cdot m / m$$

Moment for $\upsilon = 0.1667$ (concrete) is;

$$M = \frac{(1-\nu_1\ \nu_2)\cdot M\upsilon_1+(\nu_2-\nu_1)\cdot M\upsilon_1}{1-\nu_1{}^2}$$
$$= -\ \frac{(1-0.1667x0.3)x26.9+(0.3-0.1667)x26.9}{1-0.1667^2}$$
$$= -\,30.0\ kN\cdot m / m$$

- Shearing Force

$$S = \frac{p_0\,A+P}{l} = \frac{12.2x(4.96x3.50)+100.0}{2x(4.96+3.50)} = 18.4\ kN/m$$

(4) Design of Section

<table>
<tr><td colspan="2">Section</td><td colspan="3">Slab - BF</td></tr>
<tr><td colspan="2">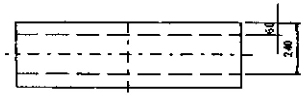 </td><td colspan="3" rowspan="3"><table><tr><td>Type</td><td>Location (m)</td><td>Dia. (mm)</td><td>Number</td><td>Re-bar AreaAs (cm^2)</td></tr><tr><td>D1</td><td>0.060</td><td>13</td><td>4.000</td><td>5.068</td></tr><tr><td>D1</td><td>0.240</td><td>13</td><td>4.000</td><td>5.068</td></tr><tr><td colspan="3">Total Re-bar Area</td><td colspan="2">Σ 10.136</td></tr></table>《Type》
D:Reinforcement Bar
1:Concrete Depth</td></tr>
<tr><td>Beam Width bw (m)</td><td>1.0000</td></tr>
<tr><td>Beam Height h (m)</td><td>0.3000</td></tr>
<tr><td>Ultimate Limit・Bend.</td><td></td><td>Ultimate Limit・Bend.</td><td></td><td></td></tr>
<tr><td>Bending Moment</td><td></td><td>Bend.Stress Mud(kN・m)</td><td>45.14</td><td></td></tr>
<tr><td>Md(kN・m)</td><td>30.00</td><td>Axial – Stress N'ud(kN)</td><td>0.00</td><td></td></tr>
<tr><td>Axial Force N'd(kN)</td><td>0.00</td><td>N'oud(kN)</td><td>4811.21</td><td></td></tr>
<tr><td></td><td></td><td>γi</td><td>1.150</td><td></td></tr>
<tr><td></td><td></td><td>γi・Md / Mud</td><td>0.764</td><td>< 1.0 OK</td></tr>
<tr><td>Ultimate Limit・Shear</td><td></td><td>Ultimate Limit・Shear</td><td></td><td></td></tr>
<tr><td>Shear Strength Vd(kN)</td><td>18.40</td><td>Shear Stress Vsd(kN)</td><td>420.96</td><td></td></tr>
<tr><td>Web Width bw(cm)</td><td>100.00</td><td>Design Stress Vyd(kN)</td><td>420.96</td><td></td></tr>
<tr><td>Effective Height d(cm)</td><td>24.00</td><td>Fwcd (N/mm2)</td><td>6.00</td><td></td></tr>
<tr><td>Negate Moment</td><td></td><td>γi</td><td>1.15</td><td></td></tr>
<tr><td>Mo(kN・m)</td><td>0.00</td><td>γi Vd / Vyd</td><td>0.050</td><td>< 1.0 OK</td></tr>
<tr><td>Bending Moment</td><td></td><td></td><td></td><td></td></tr>
<tr><td>Md(kN・m)</td><td>30.00</td><td></td><td></td><td></td></tr>
</table>

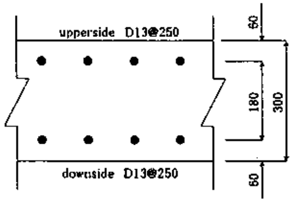

5. DESIGN OF CENTRAL CORE

Design is done for vertical force.

(1) Vertical Force

Loads of superstructure and slab are distributed with wall.

Loading Share :$A' = \pi \times \{(4.20+8.80)^2 - 4.20^2\} / 4 = 118.88\ m^2$

Superstructure $P_1 = \dfrac{W_u}{A} \times A' = \dfrac{2{,}200}{(\pi x 23.0^2/4)} \times 118.88$ = 629.4 kN

Core $P_2 = \gamma_c A\ h = 24.0 \times \{\pi \times (4.20^2 - 3.00^2) / 4\} \times 21.50$ = 3,550.4 kN

Pipe (core)

p'_3 = 362.0 kN

Slab and Live load

$P_4 = (\gamma_c\ t + w_l)\ A'\ n = (24.0 \times 0.30 + 5.0) \times 118.88 \times 4$ = 5,801.3 kN

計 N = 10,343.1 kN

Pipe Load (excluding water)

d= 2.0 m

$A = (\pi \cdot d^2) / 4 = (\pi \times 2.0^2) / 4 = 3.14\ m^2$

h= (+407.2) - (+387.2)= 20.0 m

$W_w = (A\ h)\ \gamma_w = 3.14 \times 20.0 \times 10.0 = 628.0$ kN

Pipe Weight

$p'_3 = p_3 - W_w = 990.0 - 628.0$

= 362.0 kN

(2) Design of Section

$N'_{oud} = 0.85 \cdot f'_{cd} \cdot A_c / \gamma_b$

Where; N'_{oud} :Axial force compress force(N)

f'_{cd} :Design Compressive Strength (= 23.1 N/mm^2)

A_c :Sectional Area of concrete (mm^2)

γ_b :Member factor (= 1.3)

From above,

$N'_{oud} = 0.85 \times 23.1 \times \{\pi \times (4{,}200^2 - 3{,}000^2) / 4\} / 1.3$

= 102,492,285.9 N

= 102,492.3 kN > N= 10,343.1 kN

Therefore, minimum Re-bar Area is adopted.

(3) Minimum Re-bar Area

Required minimum re-bar area for axial force is 0.8% of concrete sectional area.

From (2) Design of Section, required sectional area A_{creq} is;

$$A_{creq} = \frac{N\ g_b}{0.85\ f'_{cd}} = \frac{(10{,}802.0 \times 10^3) \times 1.3}{0.85 \times 23.1} = 715{,}182.1\ mm^2 = 7{,}151.8\ cm^2$$

Therefore, Wall thickness t_{creq} is;

$t_{creq} = A_{creq} / L = 7{,}151.8 / (\pi \times 420) = 5.42$ cm

Therefore, Re-bar Area A_{sreq} is;

$A_{sreq} = 100 \times t_{creq} \times 0.8\% = 4.33\ cm^2 / m$

(4) Adoption

Outside 4 - D13@250 A_s = 5.068 cm^2/m

Inside 4 - D13@250 A_s = 5.068 cm^2/m

Total ΣA_s = 10.136 $cm^2/m > A_{sreq}$= 4.33 cm^2/m OK

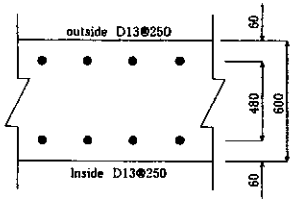

6. DESIGN OF CUTTING EDGE

(1) Design Load

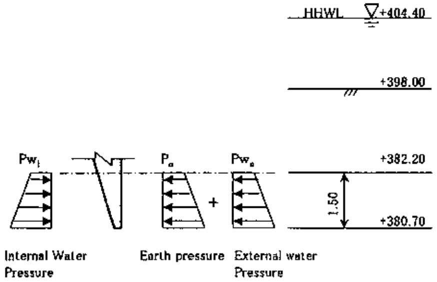

・Earth Pressure

$P_o = K_o \gamma h$

$+382.2 : P_{o1}$= 0.5 x 11.0 x (398.0 - 382.2)= 86.9 kN/m^2

$+380.7 : P_{o2}$= 0.5 x 11.0 x (398.0 - 380.7)= 95.2 kN/m^2

・External Water Pressure (HHWL: +404.4)

$P_w = \gamma_w \ h_w$

$+382.2 : P_{wo1}$= 10.0 x (404.4 - 382.2)= 222.0 kN/m^2

$+380.7 : P_{wo2}$= 10.0 x (404.4 - 380.7)= 237.0 kN/m^2

・Internal Water Pressure

Assumin difference of water pressure is 3.0m;

$+382.2 : P_{wi1} = P_{wo1}$ - 10.0 x 3.0= 222.0 - 30.0= 192.0 kN/m^2

$+380.7 : P_{wi2} = P_{wo2}$ - 10.0 x 3.0= 237.0 - 30.0= 207.0 kN/m^2

・Design Load

$+382.2 : P_1 = P_{o1} + P_{wo1} - P_{wi1}$= 86.9+222.0 - 192.0= 116.9 kN/m^2

$+380.7 : P_2 = P_{o2} + P_{wo2} - P_{wi2}$= 95.2+237.0 - 207.0= 125.2 kN/m^2

(2) Stress Resultant

Calculated as a cuntilever;

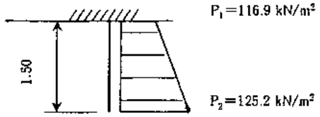

$$M = \frac{L^2}{6}(2P_2 + P_1)$$

$$= \frac{1.5^2}{6}(2 \text{ x } 125.2 + 116.9) = 137.7 \text{ kN m/m}$$

$$S = \frac{L}{2}(P_1 + P_2) = \frac{1.5}{2}(125.2 + 116.2)$$

$$= 181.1 \text{ kN/m}$$

(3) Design of Section

Section		Cutting Edge		
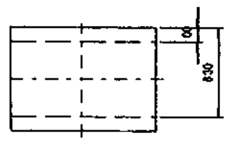				
Beam Width bw (m)	1.0000	《Type》		
Beam Height h (m)	0.7300	D:Reinforcement Bar 1:Concrete Depth		
Ultimate Limit・Bend.		Ultimate Limit・Bend.		
Bending Moment Md(kN・m)	137.70	Bend.Stress Mud(kN・m)	513.92	
Axial Force N'd(kN)	0.00	Axial – Stress N'ud(kN)	0.00	
		N'oud(kN)	14006.80	
		γi	1.150	
		γi・Md / Mud	**0.308**	**< 1.0 OK**
Ultimate Limit・Shear		Ultimate Limit・Shear		
Shear Strength Vd(kN)	181.10	Shear Stress Vsd(kN)	704.96	
Web Width bw(cm)	100.00	Design Stress Vyd(kN)	704.96	
Effective Height d(cm)	63.00	Fwcd (N/mm2)	6.49	
Negate Moment Mo(kN・m)	0.00	γi	1.15	
Bending Moment Md(kN・m)	137.70	γi Vd / Vyd	**0.295**	**< 1.0 OK**

Type	Location (m)	Dia. (㎜)	Number	Re-bar Area As (cm^2)
D1	0.060	22	4.000	15.484
D1	0.240	29	4.000	25.696
Total Re-bar Area			Σ	41.180

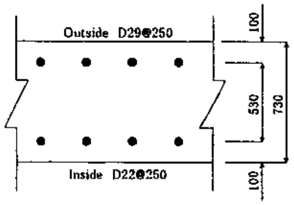

7. CHECKING FOR STABILITY

7.1 STABILITY OF FLOATATION

Examined for HHWL.

(1)Applied Formula

$$F_s= \frac{P_V}{P_w} >= F_{sa}= 1.2$$

Where; F_s :Safety factor

P_V :vertical force (kN)

P_w :buoyancy (kN)

F_{sa} :Allowable safty factor

(2) Buoyancy

$P_w = h_w \times \gamma_w \times A$

$= (404.40 - 380.70) \times 10.0 \times (\pi \times 23.40^2 / 4)$

$= 101,922$ kN

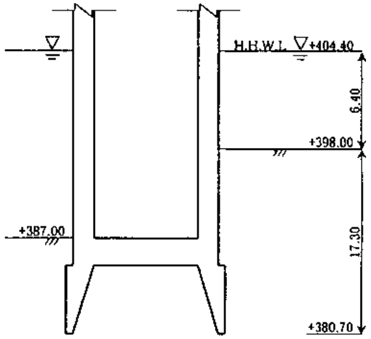

(3) Vertical Force

Super structure $P_1=$ $= 2,200\ \mathrm{kN}$

Wall (+409.00 - +404.4)

$P_2 = \gamma_c\,A\,h = 24.0 \times \{\pi \times (23.00^2 - 21.80^2) / 4\} \times 4.60$ $= 4,661\ \mathrm{kN}$

Wall (+404.40 - +399.8)

$P_3 = \gamma_c\,A\,h = 24.0 \times \{\pi \times (23.00^2 - 21.20^2) / 4\} \times 4.60$ $= 6,898\ \mathrm{kN}$

Wall (+399.80 - +395.20)

$P_4 = \gamma_c\,A\,h = 24.0 \times \{\pi \times (23.00^2 - 20.60^2) / 4\} \times 4.60$ $= 9,073\ \mathrm{kN}$

Wall (+395.20 - +387.20)

$P_5 = \gamma_c\,A\,h = 24.0 \times \{\pi \times (23.00^2 - 20.00^2) / 4\} \times 8.00$ $= 19,453\ \mathrm{kN}$

Wall (Cutting Edge)

$P_6 = \gamma_c\,V = 24.0 \times 341$ $= 8,184\ \mathrm{kN}$

$$v_1 = \frac{\pi D^2}{4}\,h = \pi \times 23.40^2 \times 4.5 / 4 \quad = 1,935.2\ \mathrm{m}^3$$

$$\text{Deduction}\,\Delta v_2 = \frac{\pi h}{3}\left(\frac{D^2}{4} + \frac{D}{2}\,\frac{d}{2} + \frac{d^2}{4}\right)$$

$$= \pi \times 4.5 \times (23.40^2 / 4 + 23.4 \times 19.0 / 4 + 19.0^2 / 4) / 3 \quad = -1,594.2\ \mathrm{m}^3$$

$$V \quad = \quad 341.0\ \mathrm{m}^3$$

Slab

$P_7 = \gamma_c\,V = 24.0 \times 399.6$ $= 9,590\ \mathrm{kN}$

$v_1 = \pi \times 21.8^2 / 4 \times 0.3 \quad = 112.0\ \mathrm{m}^3$

$v_2 = \pi \times 21.2^2 / 4 \times 0.3 \quad = 105.9\ \mathrm{m}^3$

$v_3 = \pi \times 20.6^2 / 4 \times 0.3 \quad = 100.0\ \mathrm{m}^3$

$v_4 = \pi \times 20.0^2 / 4 \times 0.3 \quad = 94.2\ \mathrm{m}^3$

$\Sigma V \quad = 412.1\ \mathrm{m}^3$

Deduction $\Delta v = \pi \times 4.2^2 / 4 \times 0.3 \times 3 = 12.5\ \mathrm{m}^3$

$V = 412.1 - 12.5 = 399.6\ \mathrm{m}^3$

Beam

$P_8 = \gamma_c\,V = 24.0 \times (120.2 + 13.0)$ $= 3,197\ \mathrm{kN}$

Straight Beam

Average length $= (21.8+21.2+20.6+20.0) / 4 = 20.9\mathrm{m}$

Length $L = 20.9 - 4.2 = 16.7\mathrm{m}$

$V_1 = 0.6 \times 0.6 \times 16.7 \times 5 \times 4 = 120.2\ \mathrm{m}^3$

Ring Beam

Length $L = \pi D - n\,b = \pi \times 13.4 - 10 \times 0.6 = 36.1\mathrm{m}$

$V_2 = 0.6 \times 0.6 \times 36.1 = 13.0\ \mathrm{m}^3$

Base Slab

$P_9 = \gamma_c\,A\,t = 24.0 \times (\pi \times 23.00^2 / 4) \times 2.00$ $= 19,943\ \mathrm{kN}$

Core (+408.70 - +387.20) h= 21.5m

$P_{10} = \gamma_c\,A\,h = 24.0 \times \{\pi \times (4.2^2 - 3.0^2) / 4\} \times 21.5$ $= 3,501\ \mathrm{kN}$

Adjustment Concrete ($V = 1594.2\ \mathrm{m}^3$ from "Cutting Edge")

$P_{11} = \gamma_c'\,V = 23.0 \times 1594.2$ $= 36,667\ \mathrm{kN}$

Bridge

$P_{12} =$ $= 2,144\ \mathrm{kN}$

Total P_V $= 125,511\ \mathrm{kN}$

(4) Safety Factor

$$F_s = \frac{P_V}{P_w} = \frac{125,511}{101,922} = 1.23 > F_{sa} = 1.2$$ OK

7.2 STABILITY OF OVERTURNING

7.2.1 Examination at LWL

(1) Formula

$$e < \frac{B}{F_s}$$

where; e :point of action of loads resultant on base slab (m)

B :width of base slab (= 23.40 m)

F_s:safety factor (= 6)

(2) Load

- Earth Pressure

$p_a = K_a\,\gamma\,h - 2\,c\,\sqrt{K_a}$

$K_a = \tan^2(45\text{ deg.} - \phi / 2)$

Elevation (m)	K_a	γ (kN/m³)	h (m)	p_a (kN/m² / m)
398.00	0.84	20.0	0.00	0.0
394.73			3.27	0.0
391.00			3.73	62.6
380.70		11.0	10.30	157.8

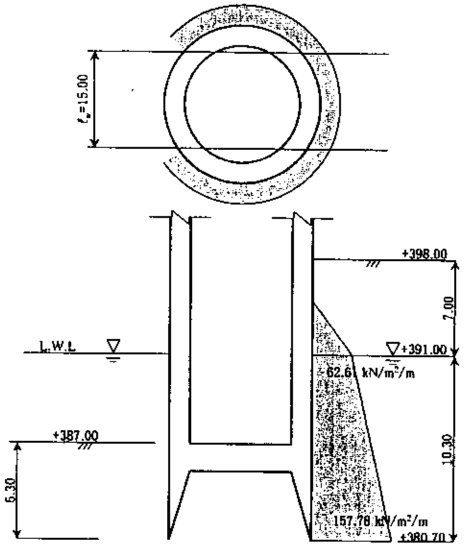

- Horizontal force by bridge

Friction force from support;

Load by Bridge :P_s= 2,144kN

Friction coefficient of bridge support :β= 0.10

Hoprizontal Force

P_{HB}= P_s x β = 2,144 x 0.1

= 214.4 kN

- Moment resultant

Moment by Earth Pressure

$M = \Sigma\{(p\ h / 2)\ L\}\ L_w$

Elevation (m)	p_a (kN/m² / m)	h (m)	L (m)	L_w (m)	M (kN·m)
394.73	0.0	-	-	15.0	-
391.00	62.6	3.73	11.54		20,209.3
380.70	62.6 157.8	10.30	4.41		75,084.2
Total					95,293.5

Moment by horizontal force of bridge

M_B= P_{HB} x L_h= 214.4 x 26.8= 5,745.9 kN·m

Total Moment

M= 95,293.5+5,745.9= 101,039.4 kN·m

- Vertical force

From "6.1 STABILITY OF FLOATATION (3) Vertical Force";

P_V= 125,511 kN

P_w= (391.0 - 380.7) x 10 x (π x 23.4² / 4)

= 44,295 kN

P= 125,511 - 44,295

= 81,216 kN

(3) Safety Check

$$e = \frac{M}{P} = \frac{101{,}039}{81{,}216} = 1.24\text{ m} < \frac{B}{F_s} = \frac{23.40}{6} = 3.90\text{ m}$$ OK

7.2.2 Examination at HHWL

(1) Formula

$$e < \frac{B}{F_s}$$

where; e :point of action of loads resultant on base slab (m)

B :width of base slab (= 23.40 m)

F_s:safety factor (= 6)

(2) Load

- Earth Pressure

$p_a = K_a \gamma h - 2c\sqrt{K_a}$

$K_a = \tan^2(45 \text{ deg.} - \phi / 2)$

Elevation (m)	K_a	γ (kN/m^3)	h (m)	p_a (kN/m^2 / m)
398.00	0.84	11.0	0.0	0.0
392.00			6.0	0.0
380.70			17.3	104.9

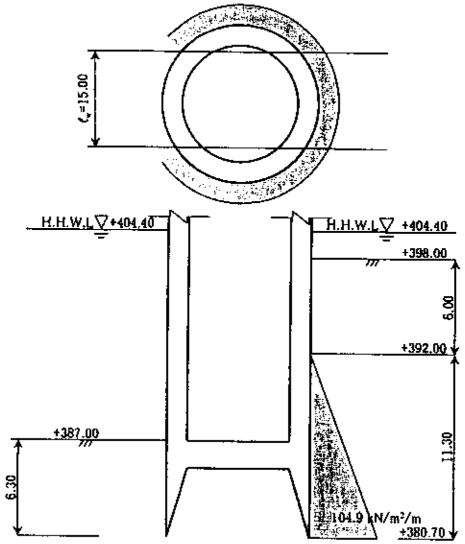

- Horizontal force by bridge

From "7.2.1 Examination at LWL";

P_{HB} = 214.4 kN

- Total Moment

Moment by Earth Pressure

$M = \Sigma\{(p\,h / 2)\cdot L\}\, L_w$

Elevation (m)	p_a (kN/m^2 / m)	h (m)	L (m)	L_w (m)	M (kN·m)
392.00	0.0	-	-	15.0	-
380.70	104.9	11.3	3.77		33,516.3
計					33,516.3

Moment by Horizontal force of bridge

From "7.2.1 Examination at LWL";

M_B = 5,745.9 kN·m

Total Moment

M = 33,516.3+5,745.9 = 39,262.2 kN·m

- Total Vertical force

From "7.1 STABILITY OF FLOATATION";

P_V= 125,511 kN

P_w= 101,922 kN

P = 125,511 - 101,922

= 23,589 kN

(3) Safety Check

$$e = \frac{M}{P} = \frac{39,262}{23,589} = 1.66 \text{ m} < \frac{B}{F_s} = \frac{23.40}{6} = 3.90 \text{ m}$$ OK

7.3 STABILITY OF SLIDING

7.3.1 Examination at LWL

(1) Formula

$H_u = c\,A_e + P_V \tan\phi$

Safety facter $F_s > 1.5$

Where	H_u	:Shering resistance force between base slab face and soil (kN)
	A_e	:Effective loading area (m^2)
	P_V	:Vertical force on base slab accounting buoyancy (kN)
	C	:Asdhesion between base slab and soil (kN/m^2)
	ϕ_B	:Friction angle between base slab and soil (degree = 2 / 3 ϕ)

(2) Load

- Active Earth Pressure

From "6.2 STABILITY OF TURNOVER (2) Load";

Elevation (m)	p_a (kN/m^2 / m)
394.73	0.0
391.00	62.6
380.70	157.8

$P_{a1} = \frac{1}{2} \times 62.6 \times (394.73 - 391.0) \quad = 116.7$ kN/m

$P_{a2} = \frac{1}{2} \times (62.6+157.8) \times 10.3 \quad = 1,135.1$ kN/m

= 1,251.8 kN/m

P_a = 1,251.8 x 15.0
= 18,777 kN

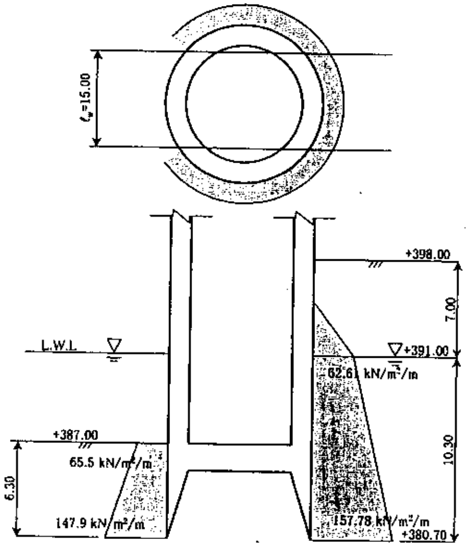

- Passive Earth Pressure

$p_p = K_p\,\gamma\,h + 2\,c\,\sqrt{K_p}$

$K_p = \tan^2(45\text{deg.} + \phi / 2)$

Elevation (m)	K_p	γ (kN/m^3)	h (m)	P_p (kN/m^2/m)
387.0	1.19	11.0	0.00	65.5
380.7			6.30	147.9

P_p = {(65.5+147.9) x 6.30 / 2} x 23.0
= 15,461 kN

- Horizontal force by bridge

P_{HB}= 214.4 kN

- Vertical Force Resultant

From "7.2.1 Examination at LWL (2) Load";

P_V = 125,511 kN

P_w = 44,295 kN

P_V' = 125,511 - 44,295
= 81,216 kN

(3) Safety check

- Resistant Shearing Force

$H_u = c\,A_e + P_V' \tan\phi_B$

= 30.0 x (π x 23.40² / 4)+81,216 x tan(2 / 3 x 5)= 12,902+4,730

= 17,632 kN

- Safety Check

$F_s' = \frac{P_p+H_u}{P_a+P_{HB}} = \frac{15,461+17,632}{18,777+214} = 1.74 > F_s = 1.5$ OK

7.3.2 Examination at HHWL

(1) Formula

$H_u = c\ A_e + P_V \tan\phi$

Safety facter $F_s > 1.5$

Where H_u :Shering resistance force between base slab face and soil (kN)

A_e :Effective loading area (m^2)

P_V :Vertical force on base slab accounting buoyancy (kN)

C :Asdhesion between base slab and soil (kN/m^2)

ϕ_B :Friction angle between base slab and soil (degree = 2 / 3 ϕ)

(2) Load

- Active Earth Pressure

From "7.2.2 Examination at HHWL (2) Load";

Elevation (m)	p_a (kN/m^2 / m)
398.00	0.0
392.00	0.0
380.70	104.9

$$P_a = \frac{1}{2} \times 104.9 \times 11.3 \times 15$$

$$= 8,890 \text{ kN}$$

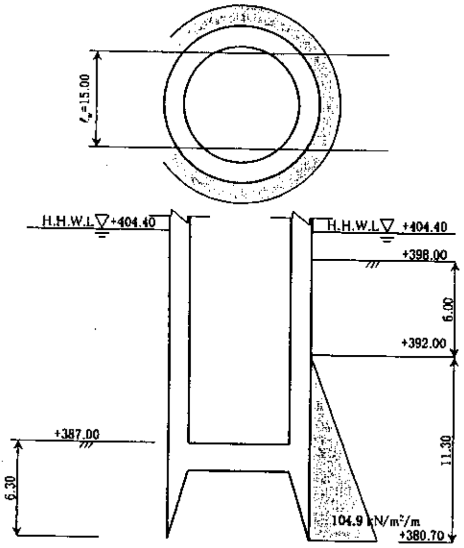

- Passive Earth Pressure

From "7.3.1 Examination at LWL"

P_p= 15,461 kN

- Vertical Force resultant

From "7.2.2 Examination at HHWL (2) Load";

P_V = 125,511 kN

P_w = 101,922 kN

P_V' = 125,511 - 101,922

= 23,589 kN

(3) Safety Check

- Resistant Shearing Force

$H_u = c\ A_e + P_V' \tan\phi_B$

$= 30.0 \text{ x } (\pi \text{ x } 23.40^2 / 4) + 23,589 \text{ x } \tan(2 / 3 \text{ x } 5) = 12,902 + 1,374$

$= 14,276$ kN

- Safety Check

$$F_s' = \frac{P_p + H_u}{P_a + P_{HB}} = \frac{15,461+14,276}{8,890+214} = 3.27 > F_s = 1.5$$ OK