5. Other Relevant Data

5 - 1 TOPOGRAPHICAL SURVEY

5 - 2 GEOTECHNICAL INVESTIGATION

5 - 3 TRAFFIC VOLUME SURVEY

5 - 4 STRUCTURAL SOUNDNESS OF EXISTING BRIDGES

5 - 5 BRIDGE LOCATION STUDY

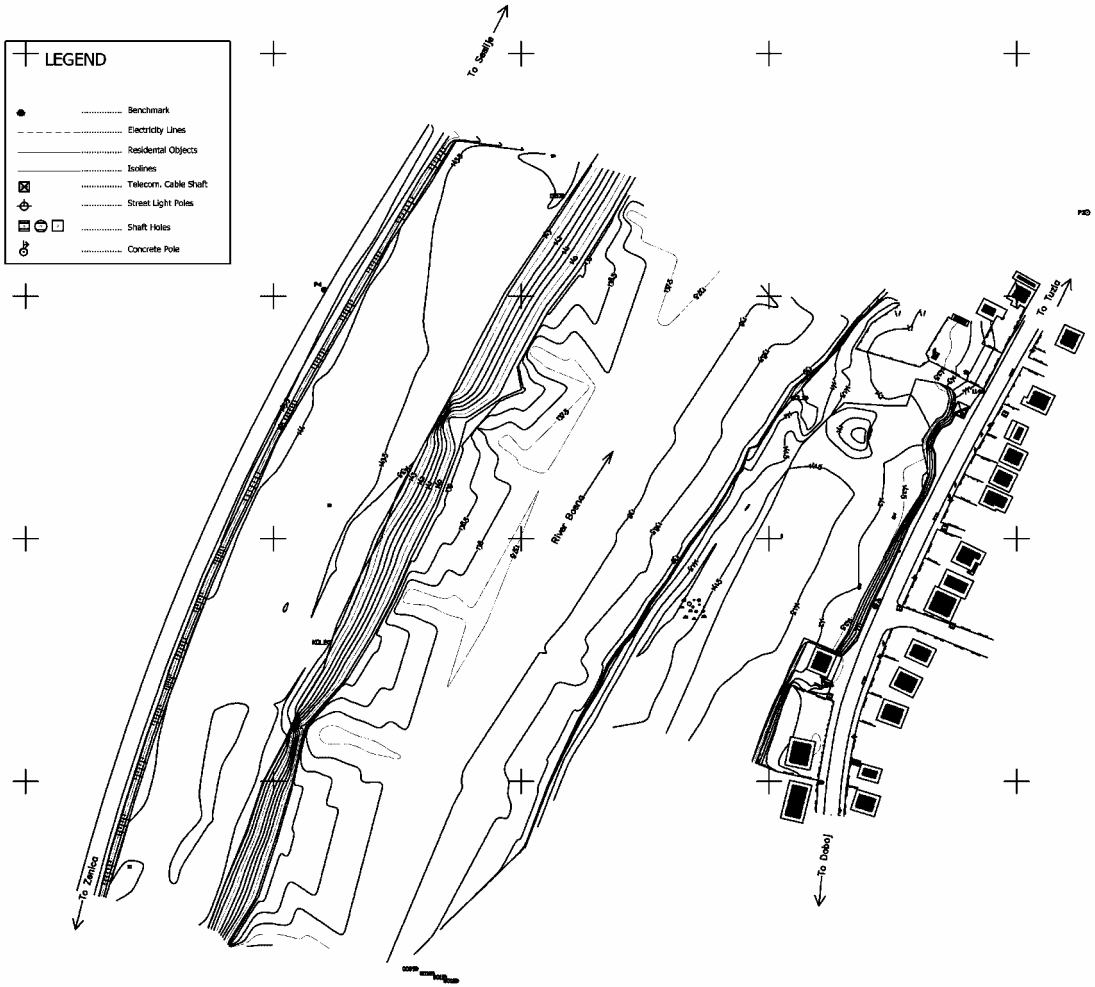

Topographical Survey 1 : Survey Points between the existing Doboj bridge and SFOR bailey bridge

Topographical Survey 2 : Survey Points of the by-pass route of Doboj

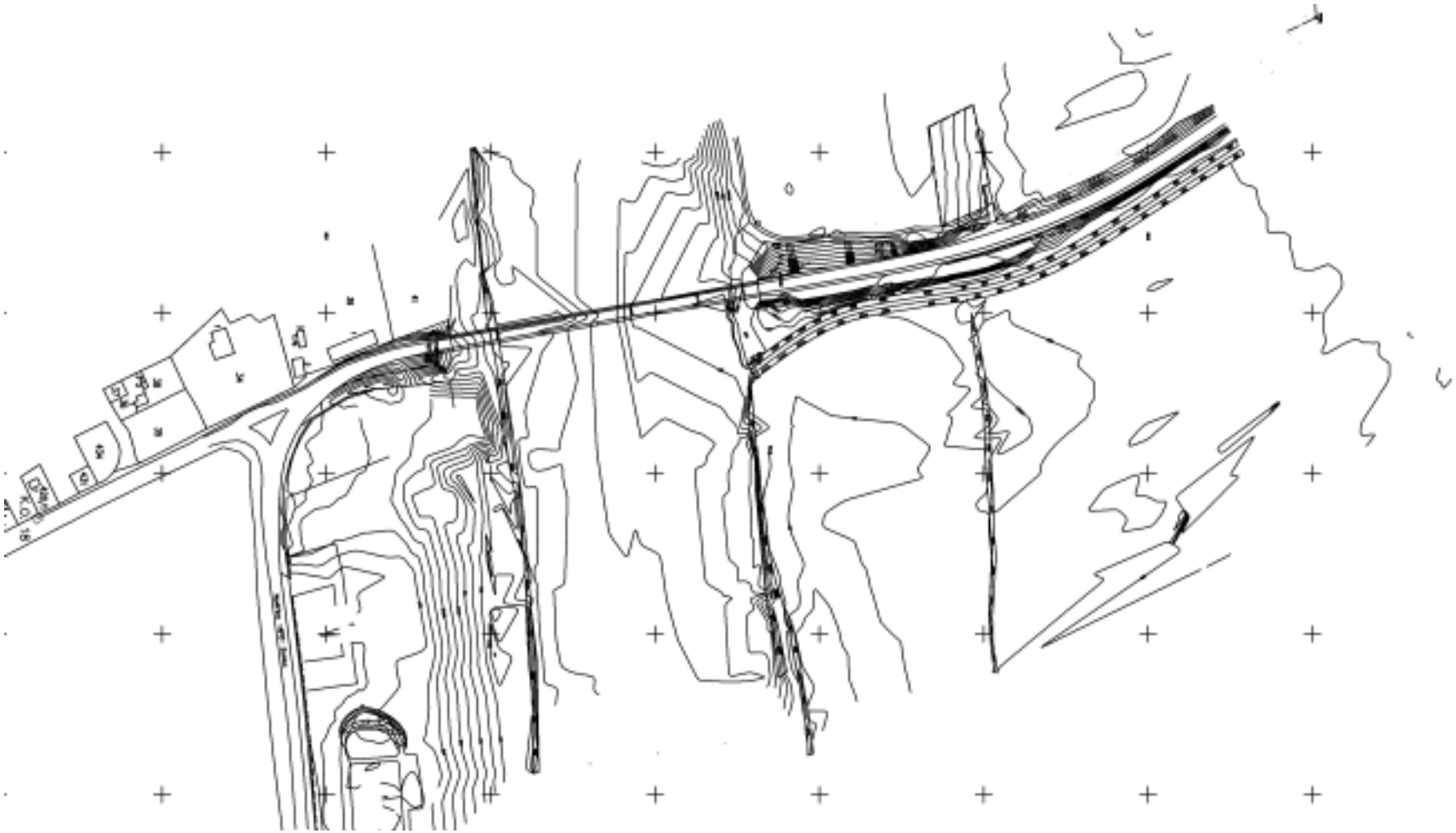

Topographical Survey 3 : Survey points of the existing Modrica bridge

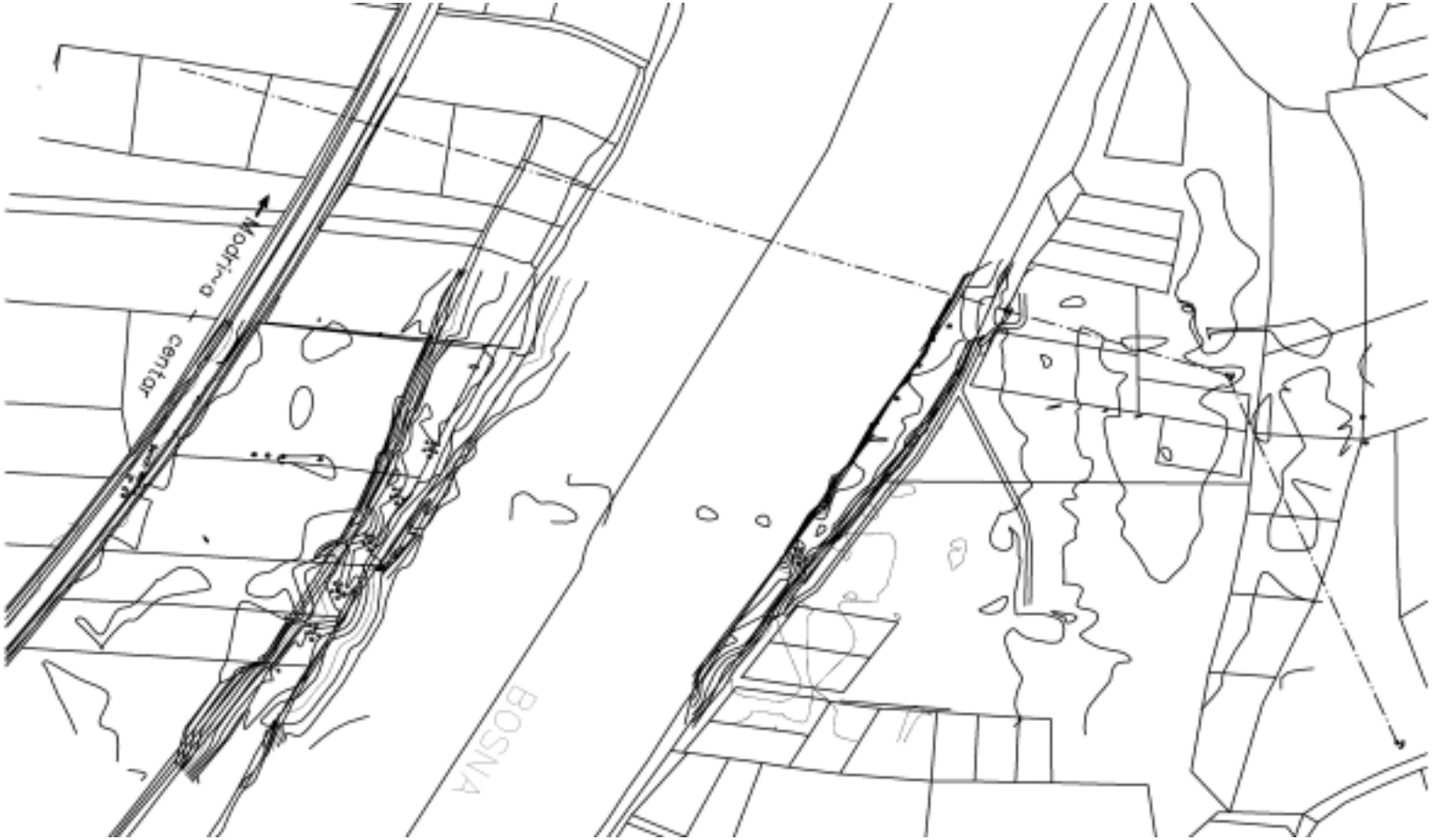

Topographical Survey 4 : Survey points of the by-pass route of Modrica

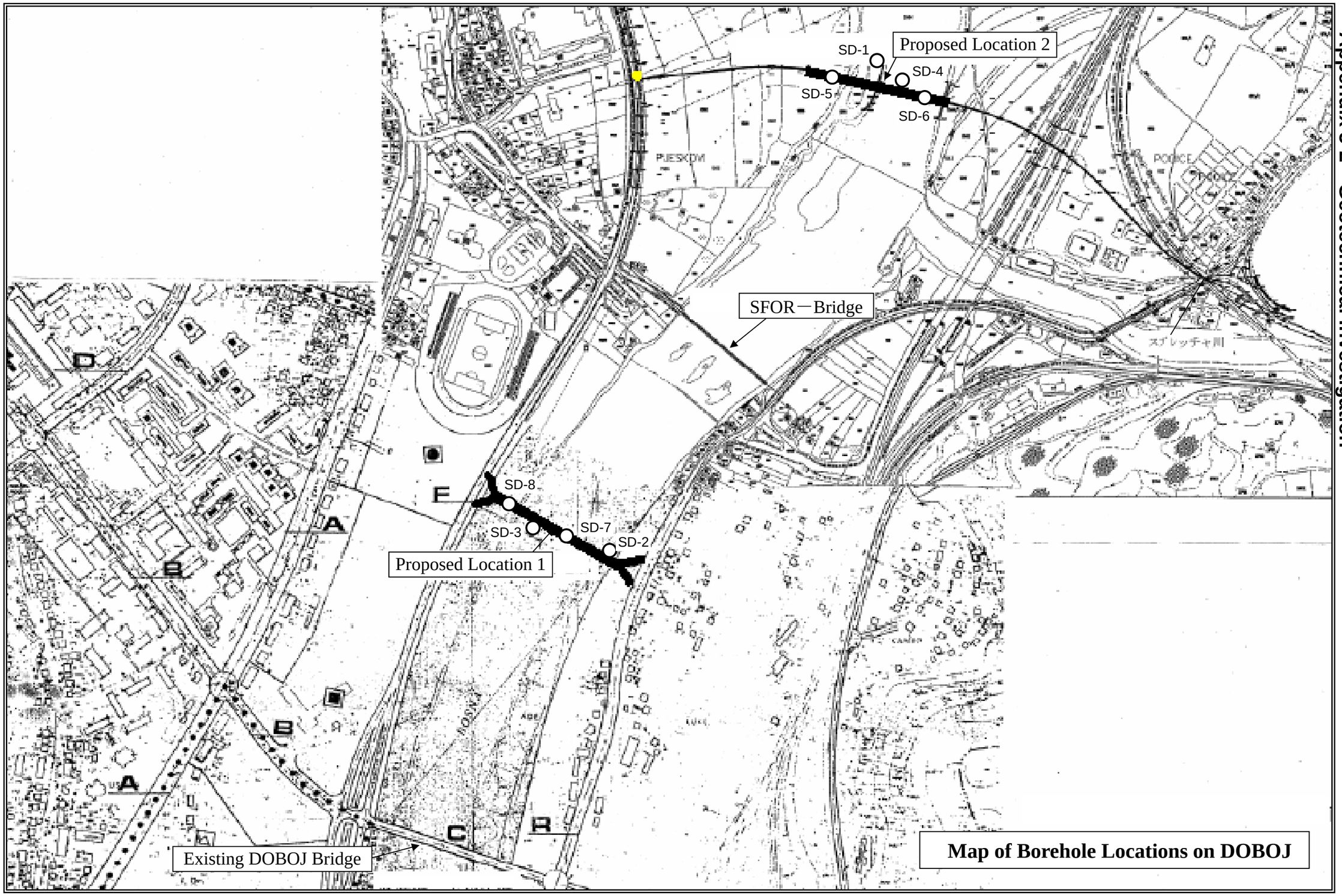

Map of Borehole Locations on DOBOJ

BASIC DESIGN STUDY ON THE PROJECT FOR RECONSTRUCTION OF THE MAIN BRDGES ON ROAD NETWORK IN BOSNIA AND HERZEGOVINA
BOREHOLE TEST RECORD

JOB No.	348/02	BC BORING No.	SD-1	SHEET	1 OF 1
PROJECT	Nippon Koei Co., Ltd. and Central Consultant Inc.	DATE STARTED	12/08/ 2002.g.	LOCATION	Doboj, nizvodno od SFOR-vog mosta na
TYPE BORING	GCR 300	DATE COMPLETED	10/10/2002.g.	GROUND ELEVATION	140,6 m

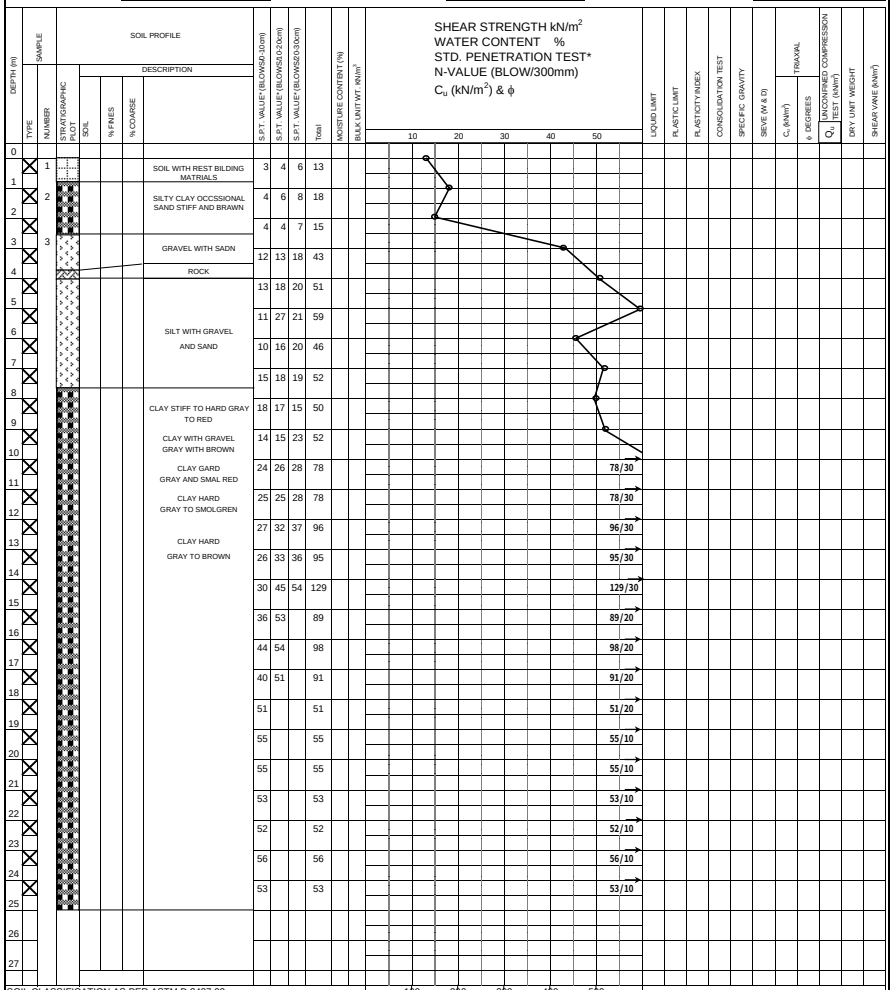

BASIC DESIGN STUDY ON THE PROJECT FOR RECONSTRUCTION OF THE MAIN BRDGES ON ROAD NETWORK IN BOSNIA AND HERZEGOVINA
BOREHOLE TEST RECORD

JOB No.	348/02	BC BORING No.	SD-4	SHEET	1 OF 1
PROJECT	Nippon Koei Co., Ltd. and Central Consultant Inc.	DATE STARTED	1/18/2003	LOCATION	Doboj, nizvodno od SFOR-vog mosta na
TYPE BORING		DATE COMPLETED	1/20/2003	GROUND ELEVATION	135,2

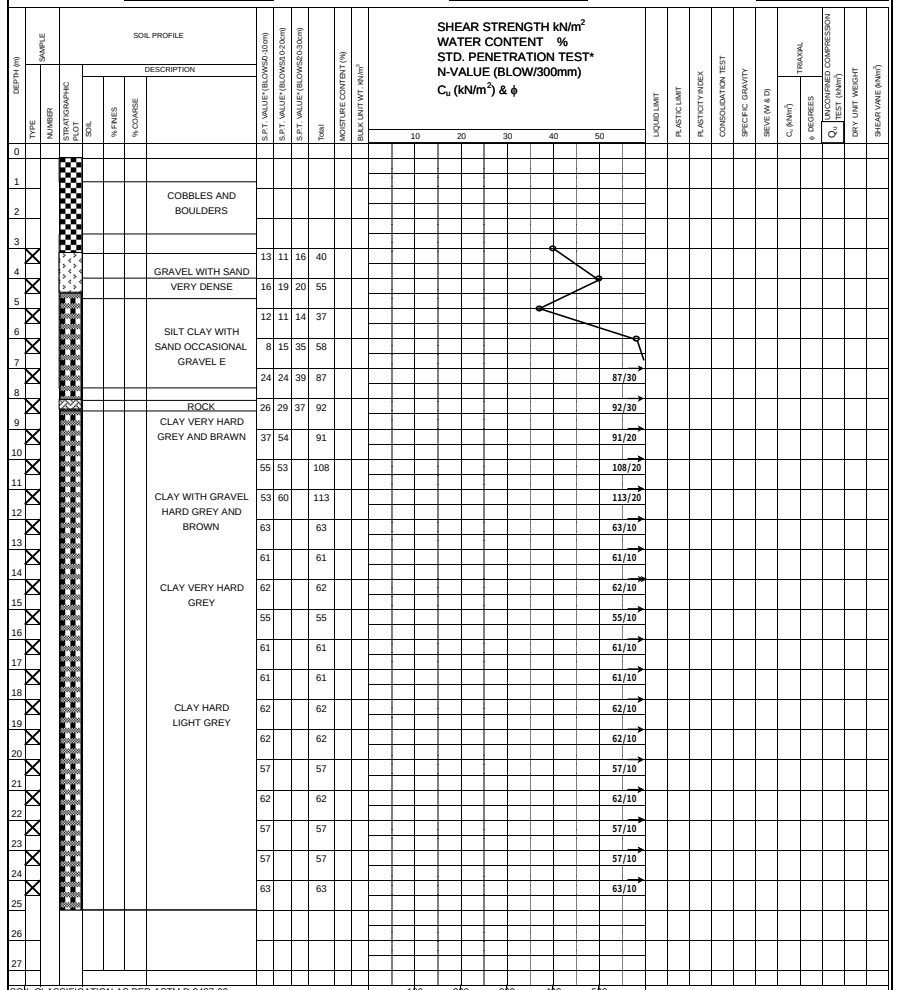

BASIC DESIGN STUDY ON THE PROJECT FOR RECONSTRUCTION OF THE MAIN BRDGES ON ROAD NETWORK IN BOSNIA AND HERZEGOVINA
BOREHOLE TEST RECORD

JOB No.	348/02	BC BORING No.	SD-2	SHEET	1 OF 1
PROJECT	Nippon Koei Co., Ltd. and Central Consultant Inc.	DATE STARTED	December 10,2002.	LOCATION	Doboj, right of the banke river
TYPE BORING	GCR 300	DATE COMPLETED	December 12,2002.	GROUND ELEVATION	141,76 m

Depth (m)	Sample Number	Soil Profile / Description	S.P.T. VALUE' (BLOW/S0-10cm)	S.P.T. VALUE' (BLOW/S10-20cm)	S.P.T. VALUE' (BLOW/S20-30cm)	Total	Shear Strength kN/m² / Water Content % / Std. Penetration Test* / N-Value (BLOW/300mm)
1	1	SOIL SILLTY SAND BRAWN					
2	2	SILTI WITH GRAVEL VERY DENSE GREY AND BRAWN	50	61	35	146	75/10
3	3	SILTY CLAY OCCASIONAL GRAVEL STIF TO HARD, GREY	37	24	76	137	75/10
4		GRAVEL WITH SAND	33	52	78	163	75/10
5		GRAVEL VERY STIFF TO HARD GREY AND BRAWN	32	53	74	159	75/10
6		CLAY HARD GREY	34	51	63	148	75/10
7			30	54	58	142	75/10
8			36	57	59	152	75/10
9			38	61	79	178	75/10
10			45	67	80	192	75/10
11			60			60	75/10
12			66			66	75/10
13			66			66	75/10
14			80			80	75/10
15			68			68	75/10
16			78			78	75/10
17			83			83	75/10
18			68			68	75/10
19			72			72	75/10
20			66			66	75/10
21			83			83	75/10
22			73			73	75/10
23			72			72	75/10
24			76			76	75/10
25			75			75	75/10
26							
27							

Columns: Moisture Content (%); Bulk Unit Wt. kN/m³; Liquid Limit; Plastic Limit; Plasticity Index; Consolidation Test; Specific Gravity; Sieve (W & D); Triaxial C_u (kN/m²), φ Degrees; Unconfined Compression Test (Q_u) (kN/m²); Dry Unit Weight; Shear Vane (kN/m²)

SOIL CLASSIFICATION AS PER ASTM D 2487-93
WATER DEPTH _____ HOURS AFTER DRILLING

POCKET PEN (kN/m²) & Q_u

DRILLER _____
WATER ENCOUNTERED _____

LEGEND: GRAVEL, SAND, METAMORPHIC, ORGANIC, BOULDERS AND COBBLES, MADE GROUND, SILT, CLAY, TOP SOIL, BOULDERS, BEDROCK

BASIC DESIGN STUDY ON THE PROJECT FOR RECONSTRUCTION OF THE MAIN BRDGES ON ROAD NETWORK IN BOSNIA AND HERZEGOVINA
BOREHOLE TEST RECORD

JOB No.	348/02	BC BORING No.	SD-3	SHEET	1 OF 1
PROJECT	Nippon Koei Co., Ltd. and Central Consultant Inc.	DATE STARTED	January 02,2003.	LOCATION	Doboj, in the river BOSNA
TYPE BORING	GCR 300	DATE COMPLETED	January 04,2003.	GROUND ELEVATION	138,18 m

Depth (m)	Sample Number	Soil Profile / Description	S.P.T. VALUE' (BLOW/S0-10cm)	S.P.T. VALUE' (BLOW/S10-20cm)	S.P.T. VALUE' (BLOW/S20-30cm)	Total	Shear Strength kN/m² / Water Content % / Std. Penetration Test* / N-Value (BLOW/300mm)
1	1	COBBELS AND BOULDERS LITH GREY					
2	2						
3	3		8	14	18	40	
4		SILTY CLAY OCCASIONAL GRAVEL STIF TO HARD, GREY	40	65		105	105/20
5			67	70		137	137/20
6		CLAY HARD GREY	78	80		158	158/20
7			89			89	89/10
8			92			92	92/10
9			94			94	94/10
10			94			94	94/10
11			95			95	95/10
12			96			96	96/10
13			99			99	99/10
14			100			100	100/10
15			102			102	102/10
16			98			98	98/10
17			91			91	91/10
18			91			91	91/10
19			86			86	86/10
20			102			102	102/10
21			95			95	95/10
22			92			92	92/10
23			96			96	96/10
24			100			100	100/10
25			100			100	100/10
26							
27							

Columns: Moisture Content (%); Bulk Unit Wt. kN/m³; Liquid Limit; Plastic Limit; Plasticity Index; Consolidation Test; Specific Gravity; Sieve (W & D); Triaxial C_u (kN/m²), φ Degrees; Unconfined Compression Test (Q_u) (kN/m²); Dry Unit Weight; Shear Vane (kN/m²)

SOIL CLASSIFICATION AS PER ASTM D 2487-93
WATER DEPTH _____ HOURS AFTER DRILLING

POCKET PEN (kN/m²) & Q_u

DRILLER _____
WATER ENCOUNTERED _____

LEGEND: GRAVEL, SAND, METAMORPHIC, ORGANIC, BOULDERS AND COBBLES, MADE GROUND, SILT, CLAY, TOP SOIL, BOULDERS, BEDROCK

BASIC DESIGN STUDY ON THE PROJECT FOR RECONSTRUCTION OF THE MAIN BRDGES ON ROAD NETWORK IN BOSNIA AND HERZEGOVINA
BOREHOLE TEST RECORD

JOB No.	085/03	BC BORING No.	SD-5	SHEET	1 OF 1
PROJECT	Nippon Koei Co., Ltd. and Central Consultant Inc.	DATE STARTED	01/04/ 2003	LOCATION	Doboj, left in the bank of the river BOSNA
TYPE BORING	GCR 300	DATE COMPLETED	01/04/2003	GROUND ELEVATION	139,03

SHEAR STRENGTH kN/m^2
WATER CONTENT %
STD. PENETRATION TEST*
N-VALUE (BLOW/300mm)
Q_u (kN/m^2) & ϕ

DEPTH (m)	SAMPLE TYPE	SAMPLE NUMBER	STRATIGRAPHIC PLOT	SOIL CLASSIFICATION	% FINES	% COARSE	DESCRIPTION	S.P.T. VALUE* (BLOW/50-10cm)	S.P.T. VALUE* (BLOW/10-20cm)	S.P.T. VALUE* (BLOW/20-30cm)	Total	MOISTURE CONTENT (%)	BULK UNIT WT. (kN/m^3)	N-VALUE (BLOW/300mm)	LIQUID LIMIT	PLASTIC LIMIT	PLASTICITY INDEX	CONSOLIDATION TEST	SPECIFIC GRAVITY	SIEVE (W & D)	TRIAXIAL C_u (kN/m^2)	TRIAXIAL ϕ DEGREES	UNCONFINED COMPRESSION TEST Q_u (kN/m^2)	DRY UNIT WEIGHT	SHEAR VANE (kN/m^2)
0																									
1							SOIL WITH SAND AND OCCASIONAL GRAVEL AND SMOLBILDING MATERIALS																		
2	X							3	5	16	24														
3	X							5	12	10	27														
4	X						GRAVEL WITH SAND GREY	20	43	40	103														
5	X						CLAY HARD BROWN	20	12	10	42														
6	X							38	52		90			90/20											
7	X						ROCK KRECNJAK	51			51			51/10											
8	X						CLAY VERY STIFF TO HARD BROWN TO GREY AND SMOLRED	24	39	49	112			112/30											
9	X							28	36	20	84			84/30											
10	X							47	53		100			100/20											
11	X							10	20	28	58			77/30											
12	X							18	29	30	77														
13	X						SILTY SAND GREY	21	37	49	107			107/30											
14	X						CLAY HARD GREY TO BROWN	5	35	50	90			90/30											
15	X							24	26	42	92			92/30											
16	X						SILTY SAND GREY	41	51		92			92/20											
17	X						ROCK	40	55		95			95/20											
18	X							45	55		100			100/20											
19	X							51			51			51/10											
20	X							49	58		108			108/20											
21	X							49	57		106			106/20											
22	X							47	58		105			105/20											
23	X							55			55			55/10											
24	X							54			54			54/10											
25	X							53			53			53/10											
26	X							57			57			57/10											
27																									

SOIL CLASSIFICATION AS PER ASTM D 2487-93
WATER DEPTH _____ HOURS AFTER DRILLING

100 200 300 400 500
POCKET PEN (kN/m^2) & Q_u

DRILLER _____
WATER ENCOUNTERED _____

LEGEND

GRAVEL, SAND, METAMORPHIC, ORGANIC, BOULDERS AND COBBLES, MADE GROUND, SILT, CLAY, TOP SOIL, BOULDERS, BEDROCK

BASIC DESIGN STUDY ON THE PROJECT FOR RECONSTRUCTION OF THE MAIN BRDGES ON ROAD NETWORK IN BOSNIA AND HERZEGOVINA
BOREHOLE TEST RECORD

JOB No.	085/03	BC BORING No.	SD-6	SHEET	1 OF 1
PROJECT	Nippon Koei Co., Ltd. and Central Consultant Inc.	DATE STARTED	03/04/2003	LOCATION	Doboj, left in the river BOSNA
TYPE BORING	GCR 300	DATE COMPLETED	05/04/2003	GROUND ELEVATION	135,32

SHEAR STRENGTH kN/m^2
WATER CONTENT %
STD. PENETRATION TEST*
N-VALUE (BLOW/300mm)
Q_u (kN/m^2) & ϕ

DEPTH (m)	SAMPLE TYPE	SAMPLE NUMBER	STRATIGRAPHIC PLOT	SOIL CLASSIFICATION	% FINES	% COARSE	DESCRIPTION	S.P.T. VALUE* (BLOW/50-10cm)	S.P.T. VALUE* (BLOW/10-20cm)	S.P.T. VALUE* (BLOW/20-30cm)	Total	MOISTURE CONTENT (%)	BULK UNIT WT. (kN/m^3)	N-VALUE (BLOW/300mm)	LIQUID LIMIT	PLASTIC LIMIT	PLASTICITY INDEX	CONSOLIDATION TEST	SPECIFIC GRAVITY	SIEVE (W & D)	TRIAXIAL C_u (kN/m^2)	TRIAXIAL ϕ DEGREES	UNCONFINED COMPRESSION TEST Q_u (kN/m^2)	DRY UNIT WEIGHT	SHEAR VANE (kN/m^2)
0																									
1							SAND WITH OCCASIONAL GRAVEL GREY																		
2	X							4	5	19	28														
3	X							6	10	16	32														
4	X						SILT SAND WITH SMOL SAND, BROWN	21	40	45	106														
5	X							48	52		100														
6	X							13	13	15	41														
7	X						SILT CLAY SITH SMOL SAND	6	10	15	31														
8	X						ROCK, DIABAZ	25	40	49	114			114/30											
9	X						SILTY CLAY CLAY ICCASIONAL GRAVEL HARD, RED TOGRAY TO BROWN	11	17	23	51														
10	X							15	20	25	60														
11	X							18	31	30	79			79/30											
12	X							20	29	32	81			81/30											
13	X							28	37	38	103			103/30											
14	X						CLAY WITH SMOL BAND BROWN	12	35	47	94			94/30											
15	X							35	47	49	131			131/30											
16	X						CLAY WITH SMOL SAND AND OCCASIONA	28	48	52	128			128/30											
17	X						GRAVEL HARD GREY TO RED	29	35	52	116			116/30											
18	X							49	52		101			101/20											
19	X							40	48	51	139			139/30											
20	X							30	52		82			82/20											
21	X							42	52		94			94/20											
22	X							45	54		99			99/20											
23	X							43	57		99			99/20											
24	X						GRAVEL HARD GREY TO RED	49	57		106			106/20											
25	X							55			55			55/10											
26	X							51			51			51/10											
27																									

SOIL CLASSIFICATION AS PER ASTM D 2487-93
WATER DEPTH _____ HOURS AFTER DRILLING

100 200 300 400 500
POCKET PEN (kN/m^2) & Q_u

DRILLER _____
WATER ENCOUNTERED _____

LEGEND

GRAVEL, SAND, METAMORPHIC, ORGANIC, BOULDERS AND COBBLES, MADE GROUND, SILT, CLAY, TOP SOIL, BOULDERS, BEDROCK

BASIC DESIGN STUDY ON THE PROJECT FOR RECONSTRUCTION OF THE MAIN BRDGES ON ROAD NETWORK IN BOSNIA AND HERZEGOVINA
BOREHOLE TEST RECORD

JOB No.	085/03 Aneks 342/02	BC BORING No.	SD-7	SHEET	1 OF 1
PROJECT	Nippon Koei Co., Ltd. and Central Consultant Inc.	DATE STARTED	30/04/2003	LOCATION	Doboj, in the river BOSNA
TYPE BORING	GCR 300	DATE COMPLETED	01/05/2003	GROUND ELEVATION	137,85

DEPTH (m)	SOIL PROFILE (DESCRIPTION)	S.P.T. VALUE* (BLOWS/0-10cm)	S.P.T. VALUE* (BLOWS/10-20cm)	S.P.T. VALUE* (BLOWS/20-30cm)	Total	MOISTURE CONTENT (%)	BULK UNIT WT. KN/m³	SHEAR STRENGTH kN/m² / WATER CONTENT % / STD. PENETRATION TEST* / N-VALUE (BLOW/300mm)	LIQUID LIMIT	PLASTIC LIMIT	PLASTICITY INDEX	CONSOLIDATION TEST	SPECIFIC GRAVITY	SIEVE (W & D)	TRIAXIAL C_u (kN/m²)	TRIAXIAL ϕ DEGREES	UNCONFINED COMPRESSION TEST (kN/m²) Q_u	DRY UNIT WEIGHT	SHEAR VANE (kN/m²)
1	GRAVEL AND PARTS OF ROCK																		
2		4	5	17	26														
3		50	53		103			103/20											
4	SAND AND GRAVEL	11	40	52	103			103/30											
5		10	12	19	41														
6	SMALL SANDY CLAY (LIGHT COFFIE TO GRAY)	15	20	21	56														
7		17	48	51	116			116/30											
8		23	41	47	111			111/30											
9		27	35	46	108			108/30											
10		17	22	28	67			67/30											
11		18	20	23	61			61/30											
12		21	28	36	85			85/30											
13		29	37	36	102			102/30											
14	CLAY LOW PLASTICITY (GRAY)	22	36	34	92			92/30											
15		34	39	40	113			113/30											
16		51	51		102			102/20											
17		36	43	51	130			130/30											
18		36	51	51	138			138/30											
19		36	41		77			77/20											
20		44	45		89			89/20											
21		42	53		95			95/20											
22		43	50		93			93/20											
23		49	54		103			103/30											
24		44	56		100			100/20											
25		58			58			58/10											
26		56			56			56/10											
27																			

SOIL CLASSIFICATION AS PER ASTM D 2487-93
WATER DEPTH _____ HOURS AFTER DRILLING
POCKET PEN (kN/m²) & Q_u
DRILLER _____
WATER ENCOUNTERED _____

LEGEND: GRAVEL, SAND, METAMORPHIC, ORGANIC, BOULDERS AND COBBLES, MADE GROUND, SILT, CLAY, TOP SOIL, BOULDERS, BEDROCK

BASIC DESIGN STUDY ON THE PROJECT FOR RECONSTRUCTION OF THE MAIN BRDGES ON ROAD NETWORK IN BOSNIA AND HERZEGOVINA
BOREHOLE TEST RECORD

JOB No.	085/03 Aneks 342/02	BC BORING No.	SD-8	SHEET	1 OF 1
PROJECT	Nippon Koei Co., Ltd. and Central Consultant Inc.	DATE STARTED	02/05/2003	LOCATION	Doboj, in the river BOSNA
TYPE BORING	GCR 300	DATE COMPLETED	03/05/2003	GROUND ELEVATION	142,1

DEPTH (m)	SOIL PROFILE (DESCRIPTION)	S.P.T. VALUE* (BLOWS/0-10cm)	S.P.T. VALUE* (BLOWS/10-20cm)	S.P.T. VALUE* (BLOWS/20-30cm)	Total	MOISTURE CONTENT (%)	BULK UNIT WT. KN/m³	SHEAR STRENGTH kN/m² / WATER CONTENT % / STD. PENETRATION TEST* / N-VALUE (BLOW/300mm)	LIQUID LIMIT	PLASTIC LIMIT	PLASTICITY INDEX	CONSOLIDATION TEST	SPECIFIC GRAVITY	SIEVE (W & D)	TRIAXIAL C_u (kN/m²)	TRIAXIAL ϕ DEGREES	UNCONFINED COMPRESSION TEST (kN/m²) Q_u	DRY UNIT WEIGHT	SHEAR VANE (kN/m²)
1	SAND AND GRAVEL																		
2		3	1	18	22														
3		6	10	16	32														
4	SMALL SANDY CLAY (LIGHT COFFIE TO GREY)	18	30	36	84			84/30											
5		20	38	45	103			103/30											
6	CLAY LIOW PLASTICITY(GRAY)	51			51			51/10											
7		21	36	47	104			104/30											
8		30	53		83			83/20											
9		36	53		89			89/20											
10		39	54		93			93/20											
11		49	52		101			101/20											
12		22	34	50	106			106/30											
13		37	52		89			89/20											
14		45	51		96			96/20											
15		52			52			52/10											
16		51			51			51/10											
17		55			55			55/10											
18		53			53			53/10											
19		51			51			51/10											
20		52			52			52/10											
21		52			52			52/10											
22		55			55			55/10											
23		54			54			54/10											
24		51			51			51/10											
25		53			53			53/10											
26		55			55			55/10											
27																			

SOIL CLASSIFICATION AS PER ASTM D 2487-93
WATER DEPTH _____ HOURS AFTER DRILLING
POCKET PEN (kN/m²) & Q_u
DRILLER _____
WATER ENCOUNTERED _____

LEGEND: GRAVEL, SAND, METAMORPHIC, ORGANIC, BOULDERS AND COBBLES, MADE GROUND, SILT, CLAY, TOP SOIL, BOULDERS, BEDROCK

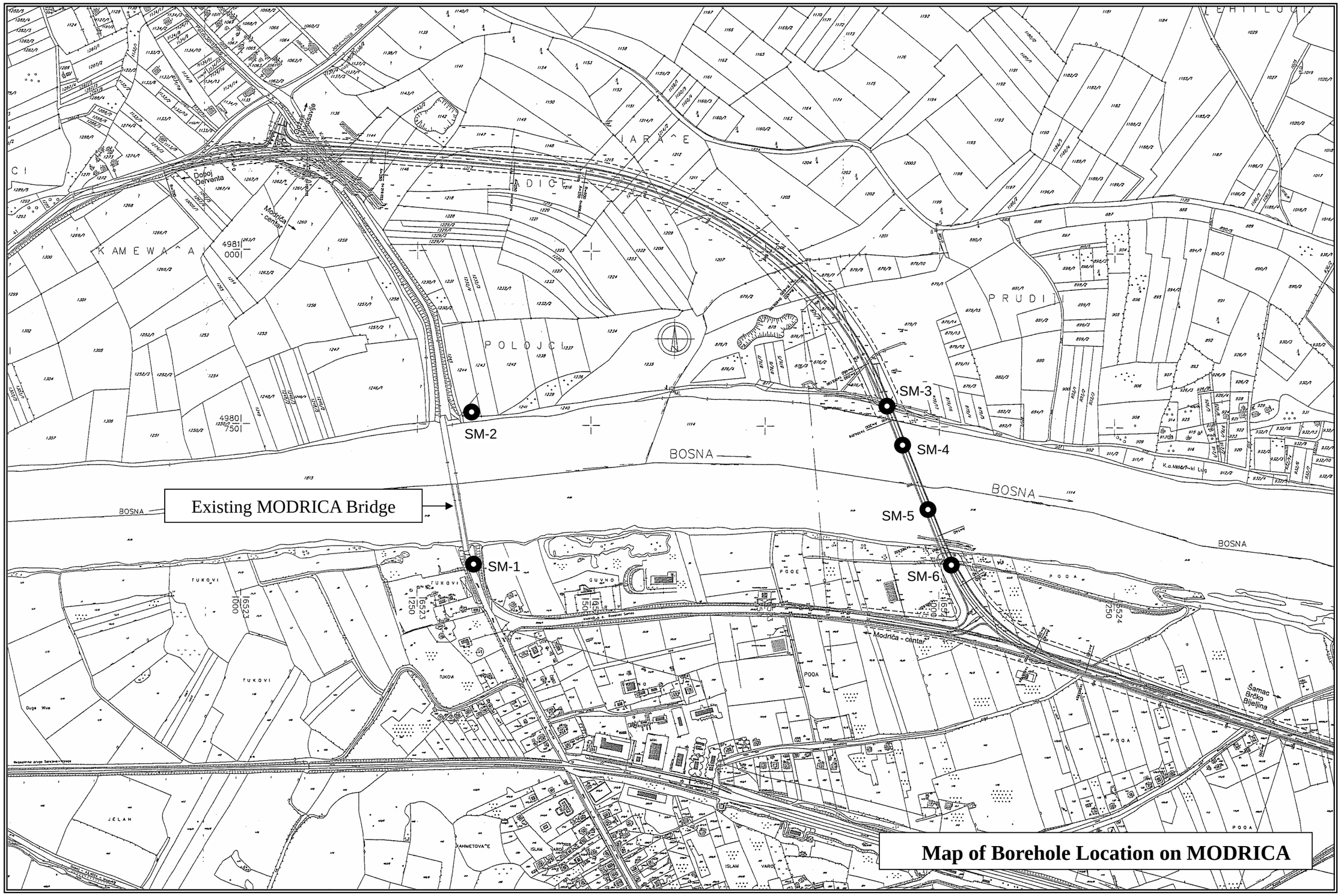
SM-1
SM-2
SM-3
SM-4
SM-5
SM-6
Existing MODRICA Bridge
BOSNA
BOSNA
BOSNA
Doboj
Derventa
Modriča - centar
Šamac
Brčko
Bijeljina
KAMEWA^A
POLOJCI
PRUDI
TUKOVI
JELAH
POQA
Map of Borehole Location on MODRICA

BASIC DESIGN STUDY ON THE PROJECT FOR RECONSTRUCTION OF THE MAIN BRDGES ON ROAD NETWORK IN BOSNIA AND HERZEGOVINA
BOREHOLE TEST RECORD

JOB No.	348/02	BC BORING No.	SM-1	SHEET	1 OF 1
PROJECT	Nippon Koei Co., Ltd. and Central Consultant Inc.	DATE STARTED	November 29, 2002.	LOCATION	MODRICA, right on the Bosna river
TYPE BORING	GCR 300	DATE COMPLETED	December 02, 2002.	GROUND ELEVATION	102,65 m

Depth (m)	Sample Type	Sample Number	Stratigraphic Plot	Soil Classification	% Fines	% Coarse	Description	S.P.T. VALUE* (BLOW/S/0-10cm)	S.P.T. VALUE* (BLOW/S/10-20cm)	S.P.T. VALUE* (BLOW/S/20-30cm)	Total	Moisture Content (%)	Bulk Unit Wt. kN/m³	Shear Strength kN/m² / Water Content % / Std. Penetration Test* / N-Value (Blow/300mm)	Liquid Limit	Plastic Limit	Plasticity Index	Consolidation Test	Specific Gravity	Sieve (W & D)	Triaxial C_u (kN/m²)	Triaxial φ Degrees	Unconfined Compression Test Q_u (kN/m²)	Dry Unit Weight	Shear Vane (kN/m²)
0																									
1							SOIL																		
2	X						SAND YELLOW TO BROWN																		
3	X																								
4	X						GRAVEL WITH SMALL SAND AND CLAY	25	16	42	83			83/30											
5	X							18	19	21	58														
6	X						COBBLES WITH SMALL SAND AND CLAY	16	24	25	65			65/30											
7	X							25	34	35	94			94/30											
8	X							35	44	45	124			124/30											
9	X						SILTY WITH SAND BROWN																		
10	X						CLAY VERY HARD GRAY TO GREEN	35	54	62	151			151/30											
11	X						COBBLES AND BOUDERS WITH CLAY VERY HARD	36	57	60	153			153/30											
12	X						GRAVEL SILT WITH SAME SAND STIFF TO HARD BROWN	29	33	34	96			96/30											
13	X							35	48	59	142			142/30											
14	X							28	31	29	88			88/30											
15	X							20	29	29	78			78/30											
16	X							22	25	44	91			91/30											
17	X						CLAY HARD TO GREY	26	31	50	107			107/30											
18	X						SILT WITH GRAVEL VERY DENSE GRAY TO BROWN	27	35	47	109			109/30											
19	X							35	49	52	136			136/30											
20	X							33	44	58	135			135/30											
21	X							49	61		110			110/20											
22	X							52			52			52/10											
23	X							63			63			63/10											
24	X							58			58			58/10											
25	X							62			62			62/10											
26	X							47	61		108			108/20											
27																									

SOIL CLASSIFICATION AS PER ASTM D 2487-93
WATER DEPTH _____ HOURS AFTER DRILLING

100 200 300 400 500
POCKET PEN (kN/m²) & Q_u

DRILLER _____
WATER ENCOUNTERED _____

LEGEND

GRAVEL, SAND, METAMORPHIC, ORGANIC, BOULDERS AND COBBLES, MADE GROUND, SILT, CLAY, TOP SOIL, BOULDERS, BEDROCK

BASIC DESIGN STUDY ON THE PROJECT FOR RECONSTRUCTION OF THE MAIN BRDGES ON ROAD NETWORK IN BOSNIA AND HERZEGOVINA
BOREHOLE TEST RECORD

JOB No.	348/02	BC BORING No.	SM-2	SHEET	1 OF 1
PROJECT	Nippon Koei Co., Ltd. and Central Consultant Inc.	DATE STARTED	November 29, 2002.	LOCATION	MODRICA, left on the Bosna river
TYPE BORING	GCR 300	DATE COMPLETED	December 03, 2002.	GROUND ELEVATION	98,19 m

Depth (m)	Sample Type	Sample Number	Stratigraphic Plot	Soil Classification	% Fines	% Coarse	Description	S.P.T. VALUE* (BLOW/S/0-10cm)	S.P.T. VALUE* (BLOW/S/10-20cm)	S.P.T. VALUE* (BLOW/S/20-30cm)	Total	Moisture Content (%)	Bulk Unit Wt. kN/m³	Shear Strength kN/m² / Water Content % / Std. Penetration Test* / N-Value (Blow/300mm)	Liquid Limit	Plastic Limit	Plasticity Index	Consolidation Test	Specific Gravity	Sieve (W & D)	Triaxial C_u (kN/m²)	Triaxial φ Degrees	Unconfined Compression Test Q_u (kN/m²)	Dry Unit Weight	Shear Vane (kN/m²)
0																									
1							SOIL																		
2	X						SANDY SILT YELLOW TO BROWN																		
3	X						CLAY WITH OCCASIONAL GRAVEL	12	11	9	32														
4	X						SAND WITH GRAVEL SMALL SILTY	14	17	43	74			74/30											
5	X							45	50	50	145			145/30											
6	X						GRAVEL SILT WITH SOME COBBLE AND SAND VERY STIFF BROWN	24	32	44	100			100/30											
7	X							31	42	44	117			117/30											
8	X							22	36	28	86			86/30											
9	X						SILTY GRAVEL STIFF AND BROWN	18	36	41	95			95/30											
10	X						GRAVEL WITH SAND STIFFY	18	22	31	71			71/30											
11	X						CLAY VERY HARD GREY																		
12	X						GRAVEL WITH BOULDERS AND COBBLES	72			72			72/10											
13	X							74			74			74/10											
14	X							74			74			74/10											
15	X							77			77			77/10											
16	X							75			75			75/10											
17	X							77			77			77/10											
18	X							66			66			66/10											
19	X							69			69			69/10											
20	X							73			73			73/10											
21	X							75			75			75/10											
22	X							79			79			79/10											
23	X							77			77			77/10											
24	X							73			73			73/10											
25	X							76			76			76/10											
26	X							77			77			77/10											
27																									

SOIL CLASSIFICATION AS PER ASTM D 2487-93
WATER DEPTH _____ HOURS AFTER DRILLING

100 200 300 400 500
POCKET PEN (kN/m²) & Q_u

DRILLER _____
WATER ENCOUNTERED _____

LEGEND

GRAVEL, SAND, METAMORPHIC, ORGANIC, BOULDERS AND COBBLES, MADE GROUND, SILT, CLAY, TOP SOIL, BOULDERS, BEDROCK

BASIC DESIGN STUDY ON THE PROJECT FOR RECONSTRUCTION OF THE MAIN BRDGES ON ROAD NETWORK IN BOSNIA AND HERZEGOVINA
BOREHOLE TEST RECORD

JOB No.	085/03	BC BORING No.	SM-3	SHEET	1 OF 1
PROJECT	Nippon Koei Co., Ltd. and Central Consultant Inc.	DATE STARTED	24/03/2003	LOCATION	MODRICA, left of the banke river BOSNA
TYPE BORING		DATE COMPLETED	24/03/2003	GROUND ELEVATION	102,05 m

DEPTH (m)	SOIL PROFILE (DESCRIPTION)	S.P.T. VALUE* (BLOWS/0-10cm)	S.P.T. VALUE* (BLOWS/10-20cm)	S.P.T. VALUE* (BLOWS/20-30cm)	Total	MOISTURE CONTENT (%)	SHEAR STRENGTH kN/m² / WATER CONTENT % / STD. PENETRATION TEST* / N-VALUE (BLOW/300mm)	LIQUID LIMIT	PLASTIC LIMIT	PLASTICITY INDEX	CONSOLIDATION TEST	SPECIFIC GRAVITY	SIEVE (W & D)	TRIAXIAL C_u (kN/m²)	TRIAXIAL ϕ DEGREES	UNCONFINED COMPRESSION TEST (kN/m²) Q_u	DRY UNIT WEIGHT	SHEAR VANE (kN/m²)
0																		
1	SOIL WITH SMOL SAND																	
2	GRAVEL AND SAND OCCASIONAL SILTY GREY TO BROWN	9	13	20	42													
3		15	22	30	67		67/30											
4		11	20	38	69		69/30											
5	GRAVEL AND SAND BILTY CLAY WITH SMOL WOTHER GREY TO BROWN	18	17	17	52													
6	CLAY WITH SAND OCCASIONAL GRAVEL YELLOW TO BROWN	2	4	23	29													
7		10	18	25	53													
8	CLAY WITH SMOL SAND AND GRAVRL, BROWN	52			52		52/10											
9		52			52		52/10											
10		30	51		81		81/20											
11		31	52		83		83/20											
12		33	52		85		85/20											
13	CLAY VGGY HARD BROWN	37	40	50	127		127/30											
14		10	13	18	41													
15		9	11	15	35													
16		48	52		100		100/20											
17		52			52		52/10											
18		55			55		55/10											
19		57			57		57/10											
20		54			54		54/10											
21		54			54		54/10											
22		52			52		52/10											
23	CLAY VGGY HARD BROWN	56			56		56/10											
24		57			57		57/10											
25		62			62		62/10											
26		58			58		58/10											
27																		

SOIL CLASSIFICATION AS PER ASTM D 2487-93
WATER DEPTH _____ HOURS AFTER DRILLING
POCKET PEN (kN/m²) & Q_u
DRILLER _____
WATER ENCOUNTERED _____

LEGEND: GRAVEL, SAND, METAMORPHIC, ORGANIC, BOULDERS AND COBBLES, MADE GROUND, SILT, CLAY, TOP SOIL, BOULDERS, BEDROCK

BASIC DESIGN STUDY ON THE PROJECT FOR RECONSTRUCTION OF THE MAIN BRDGES ON ROAD NETWORK IN BOSNIA AND HERZEGOVINA
BOREHOLE TEST RECORD

JOB No.	085/03	BC BORING No.	SM-4	SHEET	1 OF 1
PROJECT	Nippon Koei Co., Ltd. and Central Consultant Inc.	DATE STARTED	30/03/2003	LOCATION	MODRICA, left in the river BOSNA
TYPE BORING	GCR 300	DATE COMPLETED	31/03/2003	GROUND ELEVATION	98,03 m

DEPTH (m)	SOIL PROFILE (DESCRIPTION)	S.P.T. VALUE* (BLOWS/0-10cm)	S.P.T. VALUE* (BLOWS/10-20cm)	S.P.T. VALUE* (BLOWS/20-30cm)	Total	MOISTURE CONTENT (%)	SHEAR STRENGTH kN/m² / WATER CONTENT % / STD. PENETRATION TEST* / N-VALUE (BLOW/300mm)	LIQUID LIMIT	PLASTIC LIMIT	PLASTICITY INDEX	CONSOLIDATION TEST	SPECIFIC GRAVITY	SIEVE (W & D)	TRIAXIAL C_u (kN/m²)	TRIAXIAL ϕ DEGREES	UNCONFINED COMPRESSION TEST (kN/m²) Q_u	DRY UNIT WEIGHT	SHEAR VANE (kN/m²)
0																		
1	GRAVEL AND SAND VERY DENSE GREY Y BROWN																	
2		21	28	15	64		64/30											
3	CLAY WITH SAND STIFF TO HARD BROWN	15	15	48	78		78/30											
4		16	31	46	93		93/30											
5		31	52		83		83/20											
6	SILTI GRAVEL AND SAND	38	62		100		100/20											
7	CLAY WITH SMOL GRAVEL AND SAND BROWN	49	51		100		100/20											
8	GRAVEL AND SAND CLAY WITH SAND AND GRAVEL	48	52		100		100/20											
9	CLAY, VERY HARD RED TO BROWN	47	51		98		98/20											
10	CLAY WITH SMOL GRAVEL AND SAND BROWN	40	45	52	137		137/30											
11		48	52		100		100/20											
12	SILTI SAND AND GRAVEL, BROWN	10	47	51	108		108/20											
13	CLAY WITH SMOL GRAVEL AND SAND BROWN	30	42	38	110		110/30											
14		37	51		88		88/20											
15		38	52		90		90/20											
16		48	52		100		100/20											
17		61			61		61/10											
18		59			59		59/10											
19		65			65		65/10											
20		61			61		61/10											
21		70			70		70/10											
22		66			66		66/10											
23		59			59		59/10											
24		60			60		60/10											
25		66			66		66/10											
26		66			66		66/10											
27																		

SOIL CLASSIFICATION AS PER ASTM D 2487-93
WATER DEPTH _____ HOURS AFTER DRILLING
POCKET PEN (kN/m²) & Q_u
DRILLER _____
WATER ENCOUNTERED _____

LEGEND: GRAVEL, SAND, METAMORPHIC, ORGANIC, BOULDERS AND COBBLES, MADE GROUND, SILT, CLAY, TOP SOIL, BOULDERS, BEDROCK

BASIC DESIGN STUDY ON THE PROJECT FOR RECONSTRUCTION OF THE MAIN BRDGES ON ROAD NETWORK IN BOSNIA AND HERZEGOVINA
BOREHOLE TEST RECORD

JOB No.	085/03	BC BORING No.	SM-5	SHEET	1 OF 1
PROJECT	Nippon Koei Co., Ltd. and Central Consultant Inc.	DATE STARTED	27/03/2003	LOCATION	MODRICA, right in the river BOSNA
TYPE BORING	GCR 300	DATE COMPLETED	28/03/2003	GROUND ELEVATION	98,57 m

DEPTH (m)	SOIL PROFILE (DESCRIPTION)	S.P.T. VALUE (BLOWS/10-20cm)	S.P.T. VALUE (BLOWS/20-30cm)	Total	SHEAR STRENGTH kN/m² / WATER CONTENT % / STD. PENETRATION TEST* / N-VALUE (BLOW/300mm)
1	GRAVEL AND SAND				
2	CLAY SAND AND GRAVEL RED	22	27	18	67
3	GRAVEL AND SAND	20	25	8	53
4	GRAVEL AND SAND	16	31	46	93
5	ROCK	30	52		82
6	CLAY WITH COBBLE GRAVEL AND SAND STIFF TO HARD BROWN	38	52		90
7	CLAY WITH COBBLE GRAVEL AND SAND STIFF TO HARD BROWN	48	51		99
8	CLAY WITH COBBLE GRAVEL AND SAND STIFF TO HARD BROWN	50	53		103
9	CLAY WITH COBBLE GRAVEL AND SAND STIFF TO HARD BROWN	49	51		100
10	GRAVEL AND SAND; CLAY SAND WITH OCCASIONAL 127 GRAVEL	48	52		100
11	CLAY SAND WITH OCCASIONAL 127 GRAVEL	51			51
12	CLAY WITH SAND AND GRAVEL STIFF TO HARD BROWN	9	48	51	108
13	CLAY WITH SAND AND GRAVEL STIFF TO HARD BROWN	29	40	30	99
14	CLAY WITH SAND AND GRAVEL STIFF TO HARD BROWN	38	52		90
15	CLAY WITH SAND AND GRAVEL STIFF TO HARD BROWN	39	51		90
16	CLAY WITH SAND AND GRAVEL STIFF TO HARD BROWN	52			52
17	CLAY WITH SAND AND GRAVEL STIFF TO HARD BROWN	46	57		103
18	CLAY WITH SAND AND GRAVEL STIFF TO HARD BROWN	51			51
19	CLAY WITH SAND AND GRAVEL STIFF TO HARD BROWN	52			52
20	CLAY WITH SAND AND GRAVEL STIFF TO HARD BROWN	55			55
21	CLAY WITH SAND AND GRAVEL STIFF TO HARD BROWN	53			53
22	CLAY WITH SAND AND GRAVEL STIFF TO HARD BROWN	54			54
23	CLAY WITH SAND AND GRAVEL STIFF TO HARD BROWN	49	55		104
24	CLAY WITH SAND AND GRAVEL STIFF TO HARD BROWN	50			50
25	CLAY WITH SAND AND GRAVEL STIFF TO HARD BROWN	50			50
26	CLAY WITH SAND AND GRAVEL STIFF TO HARD BROWN	52			52

SOIL CLASSIFICATION AS PER ASTM D 2487-93
WATER DEPTH _____ HOURS AFTER DRILLING
POCKET PEN (kN/m²) & Q_u
DRILLER _____
WATER ENCOUNTERED _____

LEGEND: GRAVEL, SAND, METAMORPHIC, ORGANIC, BOULDERS AND COBBLES, MADE GROUND, SILT, CLAY, TOP SOIL, BOULDERS, BEDROCK

BASIC DESIGN STUDY ON THE PROJECT FOR RECONSTRUCTION OF THE MAIN BRDGES ON ROAD NETWORK IN BOSNIA AND HERZEGOVINA
BOREHOLE TEST RECORD

JOB No.	085/03	BC BORING No.	SM-6	SHEET	1 OF 1
PROJECT	Nippon Koei Co., Ltd. and Central Consultant Inc.	DATE STARTED	21/03/2003	LOCATION	MODRICA, right of the banke river BOSNA
TYPE BORING	GCR 300	DATE COMPLETED	23/03/2003	GROUND ELEVATION	102,65 m

DEPTH (m)	SOIL PROFILE (DESCRIPTION)	S.P.T. VALUE (BLOWS/10-20cm)	S.P.T. VALUE (BLOWS/20-30cm)	Total	SHEAR STRENGTH kN/m² / WATER CONTENT % / STD. PENETRATION TEST* / N-VALUE (BLOW/300mm)
1	SOIL, BROWN				
2	CLAY, BROWN AND OCCASIONAL YELLOW TO RED	2	3	4	9
3	GRAVEL SILTY WITH SOME SAND GRA.	57	54	54	165
4	GRAVEL SILTY WITH SOME SAND GRA.	25	11	8	44
5	GRAVEL SILTY WITH SOME SAND GRA.	14	0	0	14
6	GRAVEL SILTY WITH SOME SAND GRA.	5	20	13	38
7	GRAVEL WITH BOULDERS AND COBBLES	30	31	31	92
8	CLAY WITH GRAVEL AND SAND VERY HARD BROWN	43	30	45	118
9	CLAY WITH GRAVEL AND SAND VERY HARD BROWN	63	49	50	162
10	CLAY WITH GRAVEL AND SAND VERY HARD BROWN	51			51
11	CLAY WITH GRAVEL AND SAND VERY HARD BROWN	43	51	52	146
12	CLAY WITH GRAVEL AND SAND VERY HARD BROWN	47	49	53	149
13	CLAY WITH GRAVEL AND SAND VERY HARD BROWN	41	47	51	139
14	CLAY WITH GRAVEL AND SAND VERY HARD BROWN	37	51		88
15	CLAY WITH GRAVEL AND SAND VERY HARD BROWN	43	50	51	144
16	CLAY WITH GRAVEL AND SAND VERY HARD BROWN	49	52		101
17	CLAY WITH GRAVEL AND SAND VERY HARD BROWN	45	42		87
18	CLAY WITH GRAVEL AND SAND VERY HARD BROWN	44	44		88
19	CLAY WITH GRAVEL AND SAND VERY HARD BROWN	48	52		100
20	CLAY WITH GRAVEL AND SAND VERY HARD BROWN	48	55		103
21	CLAY WITH GRAVEL AND SAND VERY HARD BROWN	49	45		93
22	CLAY WITH GRAVEL AND SAND VERY HARD BROWN	50			50
23	CLAY WITH GRAVEL AND SAND VERY HARD BROWN	45	49		94
24	CLAY WITH GRAVEL AND SAND VERY HARD BROWN	51			51
25	CLAY WITH GRAVEL AND SAND VERY HARD BROWN	50			50
26	CLAY WITH GRAVEL AND SAND VERY HARD BROWN	56			56

SOIL CLASSIFICATION AS PER ASTM D 2487-93
WATER DEPTH _____ HOURS AFTER DRILLING
POCKET PEN (kN/m²) & Q_u
DRILLER _____
WATER ENCOUNTERED _____

LEGEND: GRAVEL, SAND, METAMORPHIC, ORGANIC, BOULDERS AND COBBLES, MADE GROUND, SILT, CLAY, TOP SOIL, BOULDERS, BEDROCK

Appendix 5-3 Traffic Volume Survey (1) Doboj Bridge

Date: 27, November, 2002 (Wednesday) Location: Doboj Bridge

Time	Motorcycle	Passenger Cars	Buses		Trucks		Tractor, Roadroller etc	Total	Total of Each direction		Bicycle	Pedestrian	Total	Total of Each direction	
			Mini Bus	Bus	2axles, 3axles	4 or more axles			To Tuzla	To Doboj				To Tuzla	To Doboj
12:00 - 13:00	0	665	12	12	62	11	2	764	370	394	0	370	370	190	180
13:00 - 14:00	0	659	7	8	52	6	2	734	405	329	8	130	138	84	54
14:00 - 15:00	1	694	6	10	56	16	2	785	412	373	6	160	166	125	41
15:00 - 16:00	1	786	7	14	52	13	2	875	504	371	1	330	331	270	61
16:00 - 17:00	2	536	5	11	36	26	1	617	293	324	2	60	62	31	31
17:00 - 18:00	2	482	4	9	18	9	0	524	253	271	3	80	83	71	12
18:00 - 19:00	0	470	8	11	20	5	0	514	245	269	0	90	90	60	30
19:00 - 20:00	0	344	6	9	12	3	0	374	168	206	0	80	80	40	40
20:00 - 21:00	0	257	3	0	11	7	0	278	152	126	0	50	50	20	30
21:00 - 22:00	0	203	3	0	12	2	0	220	118	102	0	30	30	10	20
22:00 - 23:00	0	156	2	0	10	8	0	176	112	64	0	15	15	10	5
23:00 - 0:00	0	113	2	0	4	1	0	120	85	35	0	0	0	0	0
Sub Total	6	5365	65	84	345	107	9	5981	3117	2864	20	1395	1415	911	504
0:00 - 1:00	0	96	0	0	4	2	0	102	48	54	0	5	5	5	0
1:00 - 2:00	0	35	0	0	2	1	0	38	16	22	0	2	2	2	0
2:00 - 3:00	0	27	0	0	2	1	0	30	14	16	0	0	0	0	0
3:00 - 4:00	0	24	0	0	3	1	0	28	17	11	0	3	3	3	0
4:00 - 5:00	0	18	1	6	4	7	0	36	13	23	1	0	1	1	0
5:00 - 6:00	1	56	1	2	6	4	0	70	24	46	2	0	2	1	1
6:00 - 7:00	0	596	0	28	32	6	0	662	284	378	1	150	151	31	120
7:00 - 8:00	0	557	3	6	53	6	0	625	323	302	1	100	101	41	60
8:00 - 9:00	0	503	1	6	79	13	0	602	333	269	0	110	110	30	80
9:00 - 10:00	1	583	1	4	53	16	3	661	298	363	1	30	31	31	0
10:00 - 11:00	0	651	0	7	75	18	1	752	331	421	1	50	51	21	30
11:00 - 12:00	1	598	1	9	60	9	2	680	321	359	0	30	30	30	0
Sub Total	3	3744	8	68	373	84	6	4286	2022	2264	7	480	487	196	291
Grand Total	9	9109	73	152	718	191	15	10267	5139	5128	27	1875	1902	1107	795

Date: 28, November, 2002 (Thursday) Location: Doboj Bridge

Time	Motorcycle	Passenger Cars	Buses		Trucks		Tractor, Roadroller etc	Total	Total of Each direction		Bicycle	Pedestrian	Total	Total of Each direction	
			Mini Bus	Medium Bus over	2axles, 3axles	4 or more axles			To Tuzla	To Doboj				To Tuzla	To Doboj
12:00 - 13:00	1	698	15	12	45	10	0	781	393	388	7	410	417	233	184
13:00 - 14:00	2	679	12	11	45	13	0	762	405	357	2	230	232	172	60
14:00 - 15:00	0	656	18	11	42	16	1	744	383	361	5	240	245	144	101
15:00 - 16:00	0	835	10	17	50	14	0	926	519	407	4	310	314	250	64
16:00 - 17:00	5	570	4	10	55	8	0	652	355	297	5	70	75	52	23
17:00 - 18:00	0	430	1	8	17	7	1	464	212	252	2	30	32	22	10
18:00 - 19:00	0	450	1	5	28	4	0	488	227	261	0	130	130	80	50
19:00 - 20:00	0	271	0	8	18	10	0	307	126	181	0	110	110	80	30
20:00 - 21:00	0	252	0	1	10	8	0	271	131	140	0	60	60	30	30
21:00 - 22:00	0	200	0	0	9	7	0	216	111	105	0	30	30	10	20
22:00 - 23:00	0	148	0	0	3	3	0	154	80	74	0	20	20	20	0
23:00 - 0:00	0	104	0	0	7	0	0	111	56	55	0	10	10	10	0
Sub Total	8	5293	61	83	329	100	2	5876	2998	2878	25	1650	1675	1103	572
0:00 - 1:00	0	50	0	0	4	1	0	55	22	33	0	2	2	2	0
1:00 - 2:00	0	39	0	0	4	1	0	44	24	20	0	0	0	0	0
2:00 - 3:00	0	29	0	0	3	2	1	35	21	14	1	0	1	1	0
3:00 - 4:00	0	15	0	0	1	4	3	23	12	11	3	0	3	3	0
4:00 - 5:00	0	36	0	1	4	6	0	47	30	17	0	0	0	0	0
5:00 - 6:00	1	66	0	7	12	10	20	116	69	47	20	0	20	20	0
6:00 - 7:00	0	575	1	22	29	7	3	637	249	388	3	200	203	23	180
7:00 - 8:00	1	639	2	7	37	15	0	701	337	364	0	270	270	80	190
8:00 - 9:00	0	551	1	6	65	10	2	635	291	344	1	60	61	31	30
9:00 - 10:00	1	658	1	6	75	19	4	764	392	372	3	190	193	43	150
10:00 - 11:00	1	596	1	4	70	14	2	688	339	349	0	70	70	40	30
11:00 - 12:00	0	673	1	10	80	14	2	780	427	353	0	110	110	50	60
Sub Total	4	3927	7	63	384	103	37	4525	2213	2312	31	902	933	293	640
Grand Total	12	9220	68	146	713	203	39	10401	5211	5190	56	2552	2608	1396	1212

Traffic Volume Survey

(2) SFOR Bailey Bridge (Doboj)

Date: 27, November, 2002 (Wednesday) Location: SFOR Bailey Bridge (Doboj)

Time	Motorcycle	Passenger Cars	Buses		Trucks		Tractor, Roadroller etc	Total	Total of Each direction		Bicycle	Pedestrian	Total	Total of Each direction	
			Mini Bus	Medium Bus over	2axles, 3axles	4 or more axles			To Tuzla	To Doboj				To Tuzla	To Doboj
12:00 - 13:00	2	150	0	0	2	75	0	229	113	116	1	139	140	84	56
13:00 - 14:00	0	277	0	3	0	135	0	415	203	212	14	147	161	99	62
14:00 - 15:00	0	150	0	0	26	50	0	226	116	110	9	84	93	55	38
15:00 - 16:00	0	297	0	0	10	65	0	372	170	202	12	138	150	104	46
16:00 - 17:00	2	226	0	3	0	43	0	274	139	135	5	42	47	24	23
17:00 - 18:00	0	265	0	0	34	135	0	434	223	211	29	88	117	57	60
18:00 - 19:00	1	104	11	0	25	16	0	157	77	80	1	34	35	25	10
19:00 - 20:00	0	81	3	1	17	15	0	117	63	54	0	16	16	8	8
20:00 - 21:00	0	73	5	0	23	8	0	109	54	55	0	2	2	2	0
21:00 - 22:00	0	32	0	0	15	13	0	60	36	24	0	3	3	3	0
22:00 - 23:00	0	33	1	1	0	14	0	49	23	26	0	2	2	1	1
23:00 - 0:00	0	25	1	0	0	14	0	40	22	18	0	4	4	3	1
Sub Total	5	1713	21	8	152	583	0	2482	1239	1243	71	699	770	465	305
0:00 - 1:00	0	19	0	0	1	2	0	22	10	12	0	11	11	5	6
1:00 - 2:00	0	5	0	0	0	3	0	8	4	4	0	3	3	1	2
2:00 - 3:00	0	6	0	0	1	2	0	9	2	7	0	5	5	2	3
3:00 - 4:00	0	17	0	0	0	5	0	22	17	5	0	7	7	6	1
4:00 - 5:00	0	24	0	0	0	24	0	48	19	29	0	7	7	5	2
5:00 - 6:00	0	87	1	0	0	40	0	128	62	66	0	30	30	17	13
6:00 - 7:00	1	128	14	1	23	28	0	195	74	121	1	109	110	36	74
7:00 - 8:00	0	126	30	0	13	39	1	209	82	127	3	83	86	28	58
8:00 - 9:00	0	97	12	0	33	39	1	182	84	98	6	49	55	20	35
9:00 - 10:00	0	122	18	0	22	32	1	195	86	109	8	52	60	26	34
10:00 - 11:00	1	134	24	1	50	45	0	255	118	137	5	68	73	33	40
11:00 - 12:00	0	101	15	1	28	20	0	165	79	86	4	67	71	38	33
Sub Total	2	866	114	3	171	279	3	1438	637	801	27	491	518	217	301
Grand Total	7	2579	135	11	323	862	3	3920	1876	2044	98	1190	1288	682	606

Date: 28, November, 2002 (Thursday) Location: SFOR Bailey Bridge (Doboj)

Time	Motorcycle	Passenger Cars	Buses		Trucks		Tractor, Roadroller etc	Total	Total of Each direction		Bicycle	Pedestrian	Total	Total of Each direction	
			Mini Bus	Medium Bus over	2axles, 3axles	4 or more axles			To Tuzla	To Doboj				To Tuzla	To Doboj
12:00 - 13:00	0	194	0	0	26	27	4	251	127	124	2	137	139	84	55
13:00 - 14:00	0	95	1	0	13	27	3	139	71	68	1	76	77	44	33
14:00 - 15:00	1	201	0	2	14	53	1	272	139	133	9	91	100	51	49
15:00 - 16:00	0	255	0	0	21	57	5	338	186	152	13	145	158	101	57
16:00 - 17:00	0	213	16	0	6	62	0	297	148	149	5	53	58	22	36
17:00 - 18:00	0	138	3	0	5	102	0	248	131	117	6	58	64	40	24
18:00 - 19:00	0	102	3	0	14	70	0	189	91	98	2	31	33	20	13
19:00 - 20:00	0	66	9	1	6	15	0	97	57	40	0	19	19	16	3
20:00 - 21:00	0	70	7	0	9	27	0	113	54	59	1	2	3	2	1
21:00 - 22:00	0	47	9	0	0	21	0	77	36	41	0	2	2	2	0
22:00 - 23:00	0	44	0	0	15	25	0	84	43	41	0	2	2	1	1
23:00 - 0:00	0	47	0	0	33	27	0	107	44	63	0	12	12	8	4
Sub Total	1	1472	48	3	162	513	13	2212	1127	1085	39	628	667	391	276
0:00 - 1:00	0	17	0	0	10	16	0	43	29	14	0	7	7	2	5
1:00 - 2:00	1	49	3	0	15	18	0	86	41	45	0	13	13	8	5
2:00 - 3:00	0	36	0	0	1	14	0	51	24	27	0	2	2	0	2
3:00 - 4:00	0	33	0	0	0	4	0	37	21	16	0	1	1	0	1
4:00 - 5:00	0	36	0	0	1	11	0	48	31	17	0	19	19	6	13
5:00 - 6:00	0	72	0	0	10	39	0	121	68	53	0	33	33	20	13
6:00 - 7:00	0	143	80	0	54	73	0	350	166	184	3	79	82	21	61
7:00 - 8:00	0	99	80	2	70	74	0	325	135	190	12	90	102	30	72
8:00 - 9:00	0	141	46	1	72	54	1	315	147	168	2	44	46	6	40
9:00 - 10:00	0	140	28	0	57	75	0	300	145	155	27	68	95	33	62
10:00 - 11:00	1	143	26	0	69	47	0	286	139	147	6	64	70	29	41
11:00 - 12:00	0	147	30	0	70	59	1	307	142	165	22	54	76	33	43
Sub Total	2	1056	293	3	429	484	2	2269	1088	1181	72	474	546	188	358
Grand Total	3	2528	341	6	591	997	15	4481	2215	2266	111	1102	1213	579	634

Traffic Volume Survey (3) Doboj Railway Station

Date: 27, November, 2002 (Wednesday) Location: Doboj Railway Station

Time	Motorcycle	Passenger Cars	Buses		Trucks		Tractor, Roadroller etc	Total	Bicycle	Pedestrian	Total
			Mini Bus	Bus	2axles, 3axles	4 or more axles					
12:00 - 13:00	0	54	5	3	3	0	0	65	0	110	110
13:00 - 14:00	0	48	1	0	4	4	0	57	0	70	70
14:00 - 15:00	0	51	0	0	5	0	0	56	2	80	82
15:00 - 16:00	0	60	0	0	3	4	0	67	0	60	60
16:00 - 17:00	0	30	5	0	2	3	0	40	0	50	50
17:00 - 18:00	0	24	0	0	3	0	0	27	0	60	60
18:00 - 19:00	0	52	1	1	0	2	0	56	1	70	71
19:00 - 20:00	0	49	0	0	2	0	0	51	0	60	60
20:00 - 21:00	0	17	0	0	0	0	0	17	0	20	20
21:00 - 22:00	0	19	1	0	0	0	0	20	0	20	20
22:00 - 23:00	0	6	0	0	0	2	0	8	0	20	20
23:00 - 0:00	0	5	0	0	0	0	0	5	0	0	0
Sub Total	0	415	13	4	22	15	0	469	3	620	623
0:00 - 1:00	0	1	0	0	1	1	0	3	0	10	10
1:00 - 2:00	0	1	0	0	0	0	0	1	0	0	0
2:00 - 3:00	0	0	0	0	0	0	0	0	0	0	0
3:00 - 4:00	0	0	0	0	0	0	0	0	0	0	0
4:00 - 5:00	0	0	0	0	0	0	0	0	0	0	0
5:00 - 6:00	0	6	0	0	1	1	0	8	0	10	10
6:00 - 7:00	0	71	8	1	3	1	0	84	1	70	71
7:00 - 8:00	0	85	2	0	2	3	0	92	2	40	42
8:00 - 9:00	1	54	4	0	3	5	0	67	0	30	30
9:00 - 10:00	0	51	5	0	3	2	0	61	1	30	31
10:00 - 11:00	1	58	1	1	5	3	0	69	0	60	60
11:00 - 12:00	1	62	1	1	2	0	1	68	0	30	30
Sub Total	3	389	21	3	20	16	1	453	4	280	284
Grand Total	3	804	34	7	42	31	1	922	7	900	907

Date: 28, November, 2002 (Thursday) Location: Doboj Railway Station

Time	Motorcycle	Passenger Cars	Buses		Trucks		Tractor, Roadroller etc	Total	Bicycle	Pedestrian	Total
			Mini Bus	Medium Bus over 25 pass	2axles, 3axles	4 or more axles					
12:00 - 13:00	0	65	0	1	5	2	0	73	1	160	161
13:00 - 14:00	0	67	0	0	2	3	0	72	0	110	110
14:00 - 15:00	0	50	0	3	2	3	0	58	0	40	40
15:00 - 16:00	0	77	0	1	2	1	0	81	0	160	160
16:00 - 17:00	0	33	0	0	7	0	0	40	2	30	32
17:00 - 18:00	0	25	0	0	1	0	0	26	0	10	10
18:00 - 19:00	0	63	0	0	2	0	0	65	0	140	140
19:00 - 20:00	0	50	0	1	0	4	0	55	0	120	120
20:00 - 21:00	0	22	0	0	0	3	0	25	0	20	20
21:00 - 22:00	0	25	0	0	0	0	0	25	0	10	10
22:00 - 23:00	0	11	0	0	0	4	0	15	0	10	10
23:00 - 0:00	0	8	0	0	0	0	0	8	0	0	0
Sub Total	0	496	0	6	21	20	0	543	3	810	813
0:00 - 1:00	0	0	0	0	0	0	0	0	0	0	0
1:00 - 2:00	0	1	0	0	0	1	0	2	0	0	0
2:00 - 3:00	0	0	0	0	0	0	0	0	0	0	0
3:00 - 4:00	0	2	0	0	1	1	0	4	1	3	4
4:00 - 5:00	0	0	0	0	0	0	0	0	0	0	0
5:00 - 6:00	0	4	0	0	0	2	0	6	0	20	20
6:00 - 7:00	0	71	1	2	6	0	0	80	1	20	21
7:00 - 8:00	0	92	1	0	2	1	0	96	1	50	51
8:00 - 9:00	0	64	3	0	5	5	0	77	1	30	31
9:00 - 10:00	0	69	0	0	3	6	0	78	0	30	30
10:00 - 11:00	0	56	0	0	7	2	0	65	1	40	41
11:00 - 12:00	1	63	0	2	4	0	0	70	3	50	53
Sub Total	1	422	5	4	28	18	0	478	8	243	251
Grand Total	1	918	5	10	49	38	0	1021	11	1053	1064

Traffic Volume Survey (4) Modrica Bridge

Date: 27, November, 2002 (Wednesday) Location: Modrica Bridge

Time	Motorcycle	Passenger Cars	Buses		Trucks		Tractor, Roadroller etc	Total	Total of Each direction		Bicycle	Pedestrian	Total	Total of Each direction	
			Mini Bus	Medium Bus over	2axles, 3axles	4 or more axles			To Doboj	To Modrica				To Doboj	To Modrica
12:00 - 13:00	2	495	0	17	51	34	7	606	313	293	24	13	37	16	21
13:00 - 14:00	1	410	0	9	59	38	3	520	284	236	11	34	45	27	18
14:00 - 15:00	1	441	0	13	40	44	11	550	290	260	8	21	29	16	13
15:00 - 16:00	1	463	0	7	45	50	6	572	303	269	16	20	36	8	28
16:00 - 17:00	0	379	0	6	41	55	5	486	259	227	14	12	26	10	16
17:00 - 18:00	3	362	0	11	22	45	0	443	214	229	9	18	27	10	17
18:00 - 19:00	0	247	0	10	13	31	0	301	130	171	1	17	18	11	7
19:00 - 20:00	0	220	0	7	24	46	1	298	141	157	1	7	8	5	3
20:00 - 21:00	0	154	0	5	11	44	0	214	124	90	3	1	4	3	1
21:00 - 22:00	0	161	0	6	9	40	0	216	104	112	1	0	1	1	0
22:00 - 23:00	0	87	0	3	5	23	0	118	63	55	0	11	11	1	10
23:00 - 0:00	0	88	0	10	7	29	0	134	56	78	0	5	5	0	5
Sub Total	8	3507	0	104	327	479	33	4458	2281	2177	88	159	247	108	139
0:00 - 1:00	0	63	0	6	3	11	0	83	35	48	0	0	0	0	0
1:00 - 2:00	0	17	0	1	2	34	0	54	34	20	0	0	0	0	0
2:00 - 3:00	0	18	0	5	7	1	0	31	21	10	0	0	0	0	0
3:00 - 4:00	0	7	0	6	4	3	0	20	12	8	0	1	1	0	1
4:00 - 5:00	0	33	0	2	10	8	0	53	25	28	0	0	0	0	0
5:00 - 6:00	0	68	0	2	10	8	0	88	51	37	0	0	0	0	0
6:00 - 7:00	0	210	0	8	20	10	0	248	122	126	3	6	9	2	7
7:00 - 8:00	1	431	0	2	35	28	6	503	245	258	6	5	11	9	2
8:00 - 9:00	1	423	0	7	34	36	8	509	251	258	7	9	16	10	6
9:00 - 10:00	2	414	0	3	38	37	7	501	271	230	12	8	20	9	11
10:00 - 11:00	2	334	0	7	24	31	4	402	210	192	11	6	17	9	8
11:00 - 12:00	2	490	0	10	36	28	7	573	306	267	6	4	10	7	3
Sub Total	8	2508	0	59	223	235	32	3065	1583	1482	45	39	84	46	38
Grand Total	16	6015	0	163	550	714	65	7523	3864	3659	133	198	331	154	177

Date: 28, November, 2002 (Thursday) Location: Modrica Bridge

Time	Motorcycle	Passenger Cars	Buses		Trucks		Tractor, Roadroller etc	Total	Total of Each direction		Bicycle	Pedestrian	Total	Total of Each direction	
			Mini Bus	Medium Bus over	2axles, 3axles	4 or more axles			To Doboj	To Modrica				To Doboj	To Modrica
12:00 - 13:00	0	536	0	18	45	34	7	640	325	315	12	18	30	17	13
13:00 - 14:00	0	505	0	13	46	42	3	609	309	300	13	17	30	17	13
14:00 - 15:00	1	445	0	11	45	36	5	543	260	283	11	9	20	8	12
15:00 - 16:00	1	442	0	7	42	26	4	522	276	246	5	9	14	10	4
16:00 - 17:00	3	439	0	4	40	35	1	522	274	248	10	15	25	10	15
17:00 - 18:00	0	355	0	8	28	42	1	434	215	219	10	4	14	10	4
18:00 - 19:00	1	276	0	11	15	20	3	326	162	164	2	5	7	1	6
19:00 - 20:00	0	184	0	6	14	36	0	240	98	142	0	0	0	0	0
20:00 - 21:00	0	166	0	3	14	35	0	218	122	96	0	1	1	1	0
21:00 - 22:00	0	109	0	3	10	38	0	160	106	54	7	2	9	2	7
22:00 - 23:00	1	85	0	12	9	22	0	129	62	67	0	4	4	1	3
23:00 - 0:00	0	69	0	4	10	12	0	95	52	43	0	0	0	0	0
Sub Total	7	3611	0	100	318	378	24	4438	2261	2177	70	84	154	77	77
0:00 - 1:00	0	34	0	3	4	22	0	63	37	26	0	0	0	0	0
1:00 - 2:00	0	23	0	4	7	45	0	79	48	31	0	1	1	1	0
2:00 - 3:00	0	11	0	4	11	5	0	31	21	10	0	0	0	0	0
3:00 - 4:00	0	12	0	5	5	2	0	24	14	10	0	0	0	0	0
4:00 - 5:00	0	36	0	2	13	8	0	59	34	25	0	2	2	0	2
5:00 - 6:00	0	74	0	2	14	13	0	103	66	37	0	1	1	1	0
6:00 - 7:00	2	242	0	9	28	14	0	295	170	125	1	9	10	5	5
7:00 - 8:00	0	432	0	3	34	38	7	514	272	242	2	11	13	9	4
8:00 - 9:00	1	459	0	9	28	50	7	554	260	294	7	13	20	10	10
9:00 - 10:00	4	388	0	4	40	47	2	485	245	240	1	6	7	2	5
10:00 - 11:00	0	399	0	6	18	35	4	462	237	225	6	11	17	7	10
11:00 - 12:00	2	517	0	8	38	34	5	604	314	290	5	12	17	6	11
Sub Total	9	2627	0	59	240	313	25	3273	1718	1555	22	66	88	41	47
Grand Total	16	6238	0	159	558	691	49	7711	3979	3732	92	150	242	118	124

Appendix 5-4 Structural Soundness of Existing Bridges

1) Doboj Bridge

Table Investigation sheet of Doboj Bridge

			Doboj Bridge	
Bridge Data	Style		5 spans RC continuous T-section girders bridge＋7 spans RC continuous slab bridge	
	Length		213,200	
	Soan		(18,950+3@25,000+18,950)+(12,000+5@15,000+14,700+13,400)	
	Width	total	13,900	
		road way	9,000	
		sidewalk	2,250 (effective width: 2,050) ×2	
	Abutment		Reversed T type abutment (inference)	
	Pier		River basin：Wall type Flood prone area：Pile Bent	
	Foundation		River basin : Unknown Flood prone area : Piers (inference)	
Status of Damages	Concrete Deck Slab		**5 spans RC continuous T-section girders bridge :** Vital cracks with soaking lime are observed on the center of concrete deck slabs. In the part of right bank side, some concrete separations with rusted naked reinfocements are foound. The overhanging concrete slab has cracks each 20 to 50cm with soaking lime. **7 spans RC continuous slab bridge :** 30 to 40% of lower surface of concrete deck slab is covered by white soaking lime with plenty of craks. The soaking lime is formed like iccles with drops. Many concrete separations with rusted reinforcement are observed.	
	Main Girder		**5 spans RC continuous T-section girders bridge :** Compering with the concrete slab, the main girder has smoller numbers of cracks, but the lower flange has some concrete separation. In the part of the jointing hinged bearing, compressed crushing is happend. Honycomb concrete which will cause concrete separation is observed on the main girders. **7 spans RC continuous slab bridge :** In many parts, vital concrete separations with seriously rusted reinfocing bars are found. In the center of the bridge, water is soaking out from the downstream side girder always.	
	Abutment		**5 spans RC continuous T-section girders bridge :** The abutment on left bank has vertical deep cracks on upper streamside and imprint of reinforcing on the bearing bed. **7 spans RC continuous slab bridge :** The abutment on right bank which is reformed in front of previous abutment base has no damage.	
	Pier		**5 spans RC continuous T-section girders bridge :** Few concrete separations are found on the surface of piers in the river basin. The pier, which connects the two sets of girders, has horizontal crack with soaking lime on the construction joints. **7 spans RC continuous slab bridge :** Two piers on the flood prone area, which is tied to concrete deck slabs, have no vital damages. But there are two doubt points of rusted reinfocements.	
	Foundation		Unknown	
Inspection	Schumitd-hammer		superstructure	Main girder : 220kg/cm2 Concrete slab : 230kg/cm2
			sbustructure	Hinged bearing piers : 177kg/cm2
	Neutralization		Depth : 5 to 10mm（Right bank side first span main girder)	
Durability*			Rank : E (Dangerous)	

* : The durability assessment of the construction department of Tokyo Metropolis

2) Modrica Bridge

Table Investigation sheet of Modrica Bridge

			Modrica Bridge	
Bridge Data	Style		5 spans RC continuous T-section girders bridge＋RC simple beam bridge	
	Length		184,700	
	Soan		(28,700+3@41,300+14,000)+16,400	
	Width	total	9,400	
		road way	6,000	
		sidewalk	1,700(effective width: 1,500) ×2	
	Abutment		Reversed T type abutment	
	Pier		River basin：Wall type Portal-frame (rebuilt)	
	Foundation		River basin : Spread foundation Piers : caisson foundation	
Status of Damages	Concrete Deck Slab		On the center deck slab between main girders and floor beams, a few vital longitudinal cracks and shear cracks from the corner of main girders and floor beams are occurred. On the 3rd span from left bank, there is a prints of repaired about 80cm diamater hole on deck slab. There are some danger spots which will fall down possibly. Cracks with soaking lime are seen on the over hanging slab. No damage is found in the new first span on left bank side.	
	Main Girder		Regarding to the main girders, plenty of shear and moment cracks on the point of intermediate supports, and many moment cracks near the center of spans, are observed more than each 50cm. On the lower surface, concrete separations, naked reinforcements, and rusted reinforcement by shortage of covering concrete are seen.	
	Abutment		The abutment on left bank was extended, when new first span was rebuilt. The extension has no damage.	
	Pier		The vertical surfaces of wall type piers which are covered by natural stone pitching keep good conditions about pointing and stones (If some dameges is on going inside of stone pitching, cracks will come to pointing.). And no cracks, no separations, and no other damage are seen on the top of these wall type piers which is not stone pitched.	
	Foundation		Comfirmd by Drawings. Unknown damages.	
Inspection	Schumitd-hammer	superstructure	Main girder : 460kg/cm2 Concrete slab : 460kg/cm2	
		sbustructure	Right : 330kg/cm2 Wall type pier : 480kg/cm2 (Top of pier)	
	Neutralization		Depth : 1 to 10mm（Left abutment)	
Durability*			Rank : E (Dangerous)	

* : The durability assessment of the construction department of Tokyo Metropolis

Appendix 5-5 Bridge Location Study

1) COMPARATIVE STUDY ON DOBOJ BRIDGE LOCATION

As discussed in Appendix 6-4 of this report, it is difficult to reuse the existing Doboj Bridge by reinforcement. Accordingly, options for building a new bridge are studied as shown in Figure 2-3 in the main report.

The following two options of bridge location is considered.

Bridge Location Option 1: Plan of a new bridge between the existing bridge and SFOR bridge.

Bridge Location Option 2: Plan of a new bridge on the by-pass route located on the confluence of Bosna and Spreca rivers, about 1km downstream side of the existing Doboj bridge.

Option 1 was proposed by the JICA Study Team at the onset of the basic design study in BiH. On the other hand, Option 2 was proposed by the Road Directorate of RS as stated in the Minutes of Discussions dated November 18, 2002. It was selected among several locations by the Road Directorate as its easier land acquisition.

As a result of the comparative study shown in next page, Option 2 is judged more favorable than Option 1 since it is advantageous in economic construction cost, improvement of highway geometry, traffic safety, implication of Doboj City Urban Road Plan, etc.

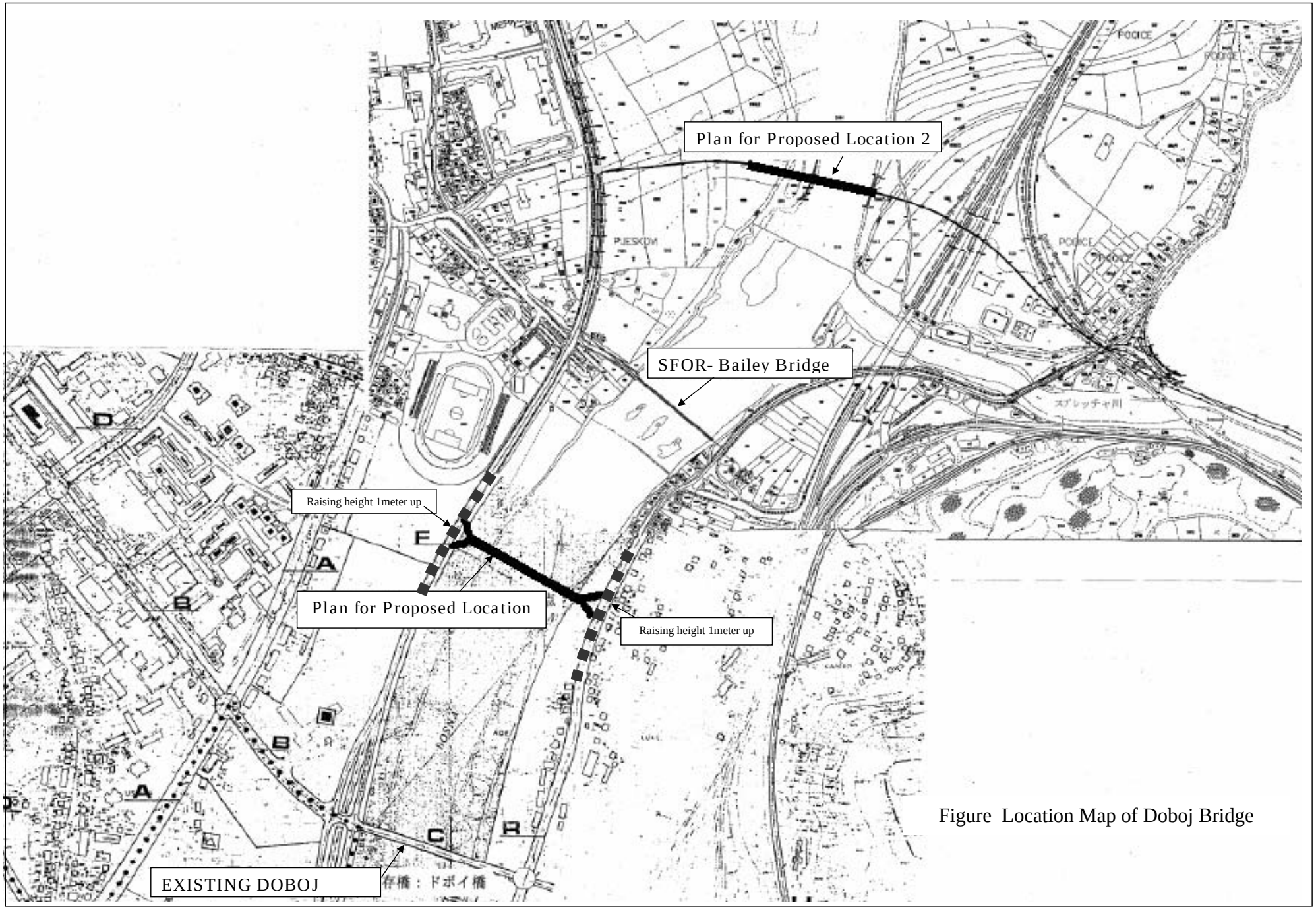

Figure Location Map of Doboj Bridge

Comparison Table for the route of the Doboj Bridge

	Plan for Proposed Location 1 - Plan of new bridge construction located between the existing bridge and SFOR bailey bridge		**Plan for Proposed Location 2** - Plan of a new bridge construction on the by-pass route located on the downstream side of the confluence of the Bosna and Spreca rivers	
① Preconditions	1) New bridge construction plan at the mid-point between the existing bridge and the SFOR bailey bridge		1) New bridge construction plan on the by-pass route located on the river confluence 2) Construction of by-pass road and the railroad underpass is needed.	
② Contents of plan	1) (Grant Aid) - Construction of a new bridge (bridge length of 200 m) - Approach roads to the existing roads (including the construction of two intersections) - Embankment - Ancillary works such as road lightings		1) (Grant Aid) - Construction of a new bridge (bridge length = 200 m) - Approach roads from abutment to the new by-pass road (each 50 m on both sides of the - Embankment - Ancillary works such as road lightings	
	2) (RS undertaking) - Improvement of the existing roads to meet the design flood level (E 73: 0.3meter higher than the exting road, M4-3: 1.2 meter higher than the exting road)		2) (RS undertaking) - Construction of by-pass road - Construction of intersections (2 places) - Construction of railroad underpass	
③ Type of bridge	- PC 2 span T-girder bridge with pre-tensioning method and PC 4 span T-girder bridge with post-tensioning method (precast segmental method) and PC 3 span T-girder bridge with pre-tensioning method - Span length：16 m x 2 + 30 m x 4 + 16 m x 3 = 200 m - Total Width：13.80 m (Same width as the existing bridge) - Substrucutre：7 wall type bridge piers and 2 inverted T-type abutments		- PC 5 span T-girder bridge with post-tensioning method (precast segmental method) - Span length：40 m x 5 = 200 m - Total Width：12.20 m (Reduction of the width of sidewalk) - Substrucutre：4 wall type bridge piers, 2 inverted T-type abutments	
④ Comparative evaluation				
④-1 Improvement level	◎	The life span of a new bridge can be guaranteed as a normal permanent bridge.	◎	The life span of a new bridge can be guaranteed as a normal permanent bridge.
④-2 Access road	○	① The construction of intersection connected to the existing road is necessary. ② Reconstruction of the existing roads is required for the design flood level. (E 73: 0.3meter higher than the exting road, M4-3: 1.2 meter higher than the exting road)	○	① The construction of by-pass road and intersection connected to the existing road is necessary. ② None
④-3 Improvement level of highway	△	The alignment of the road can not be improved. The running speed (30 to 40 km/h) will not be improved because the road passes through the city area.	◎	The alignment of the road will be improved to the design speed of 80 km/hr.
④-4 Traffic flow	△	① The traffic flow (to/from TUZLA): The alignment of the road can not be improved.	○	① The traffic flow (to/from TUZLA): The long distance traffic flow can be improved.
	△	② Traffic to/from Doboj station：Same as present.	△	② Traffic to/from Doboj station：Same as present.
	△	③ Traffic to/from Doboj city：The traffic flow is unchanged .	○	③ Traffic to/from Doboj city：Simpified and improved
④-5 Structure of superstructure	○	① This bridge's sidewalk width must be the same as that of the exiting bridge. ② For the concrete structure, painting is not necessary.	○	① This bridge's sidewalk width is 1.2m, because there are less pedestrians on a new bridge than the exsiting bridge. ② For the concrete structure, painting is not necessary.
④-6 Necessity for land acquisition	○	Expropriation(land acquisition and housing compensation) is necessary. Small area (approx. 2700 m2)	△	Expropriation is necessary. Wide area (land to construct the access road needs approx. 22,000 m2)
④-7 Environment of city area on the left bank	△	The traffic density will be almost same as at present and the environment will not be improved.	○	Through traffic will be distributed to the by-pass and the environment will be improved significantly.
④-8 Implication of Boboj City Road Plan	△	The Doboj City Road Plan is not considered.	◎	This is a by-pass plan conforming to the Doboj City Road Plan.
④-9 Construction period (substantial period)	○	24 months (16 months)	○	24 months (16 months)
④-10 Cost borne by the grant aid (Cost ratio)	1,14		1,00	
④-11 Cost borne by the RS	1,00	① Cost for construction ：\40,000,000 (The existing road should be raised.) ② Cost for Land acquisition：\22,000,000 (approx. 2700 m2)	1,68	① Cost for construction ：\68,000,000 (New by-pass road) ② Cost for Land acquisition：\36,000,000 (approx. 22,000 m2)
Evaluation	△		◎	

2) COMPARATIVE STUDY ON MODRICA BRIDGE LOCATION

The following two options were examined for determining the bridge location. The location map of the two options is shown in Figure 2-4 in the main report.

Bridge Location Option 1: Improvement plan of the existing bridge.

Bridge Location Option 2: Construction plan to build a new bridge on the by-pass route.

Option 1 was proposed by the JICA Study Team at the onset of the basic design study in BiH. Option 2 was proposed by the Road Directorate of RS after examination of several conceivable route options when the JICA Study Team was conducting the field surveys in RS. The main reason that the Road Directorate chose Option 2 is because of easier land acquisition.

After comparison study by the JICA Study Team between two options as per Table in next page, Option 2 was judged favorable since it is advantageous in improvement of highway geometry, structural durability, implication of role as EU Motorway Corridor Vc (Police (HR) – Sarajevo (BiH) – Osjek (HR) – Budapest (HU)), etc. even though Option 1 was advantageous on the view point of construction cost.

Figure Location Map of Modrica Bridge

Comparison Table for the route of the Modrica Bridge

	Plan for Proposed Location 1- Improvement plan for the superstructure of the exisiting bridge		**Plan for Proposed Location 2** - Construction plan of new bridge on by-pass	
① Preconditions	1)	Improvement plan for the exisiting bridge.	1)	Plan of new bridge construction on by-pass route.
	2)	As a result of stability calculation and test of material strength for the existing bridge , the superstructure and the abutments need reconstruction, the columns of piers can be re-used.	2)	The alignment of the road will be improved for the design speed of 80 km/hr.
②Contents of plan	1)	(Grant Aid) - Removal of the superstructure of existing bridge（29.5m+41.3mx3+29.5m=182.9m) - Construction of new steel superstructure (183 m) - Removal and construction of 2 abutments for existing bridge, and improvement of existing pier beam - Construction of approach road, embankment, and Bridge facilities	1)	(Grant Aid) - Construction of new bridge (bridge length = 240 m) - Approach road (before and after the bridge of 50 m with the total of 100 m) - Embankment - Construction of approach road, embankment, and ancillary facilities
	2)	(RS undertaking) - Construction and removal of detour (Including 150 m for temporary bridge)	2)	(RS undertaking) - Construction of by-pass road (Including the construction of small bridge and 2 intersections)
③ Type of bridge		- Steel 5 span plate girder bridge - Span length ：29.55 m + 41.3 m x 3 + 29.55 m = 183 m - Total Width ： 12.20 m - Substrucutre type：2 reversed T-type abutments, improvement of existing pier beam		- PC 6 span T-girder bridge with post-tensioning method （Precast segment） - Span length ： 40 m x 6 = 240 m - Total Width ： 12.20 m - Substructure type：5 wall-type bridge piers, 2 inverted T-type abutments
④ Comparative evaluation				
④-1 Improvement level	△	Improvement level is lower than the by-pass plan	◎	The life span of a new bridge can be ensured as a normal permanent bridge.
④-2 Detour/Access road	△	The temporary detour and temporary bridge are necessary during the bridge rehabilitation works	○	The existing bridge can be usde as detour.
④-3 Improvement level of highway	△	The alignment of the road can not be improved. The running speed (30 to 40 km/h) can not be improved. This plan cannot meet the JICA BiHTMAP.	◎	The alignment of the road will be improved for the design speed of 80 km/h . This plan follows the JICA BiHTMAP.
④-4 Intersection	△	Intersection can not be improved.	○	With the improvement of intersection, the traffic flow at intersections will be improved.
④-5 Structure of superstructure	△	① The steel girder is applicated to reduce weight lighter than the superstructure of existing bridge.	○	①The cost for PC T-girder is lesser than metal type bridge.
	△	②Regular painting works are needed.	○	②For the concrete structure, painting works are not necessary.
④-6 Necessity for land acquisition	○	The lease of land for detour is necessary (small area).	△	Expropriation is necessary (approx. 26,000 m2)
④-7 Construction period (substantial period)	○	10 months	△	26 months (18 months)
④-8 Cost borne by the grant aid (Cost ratio)	1.00		1.30	
④-9 Cost borne by the RS	1.00	① Cost for construction ：\84,000,000（Construction and removal of detour） ② Cost for Land acquisition ：None	1.81	① Cost for construction ：\109,000,000（Access road） ② Cost for Land acquisition ：\43,000,000(approx. 26,000 m2)
Evaluation	△		◎	

GENERAL PLAN (DOBOJ BRIDGE)

PROFILE

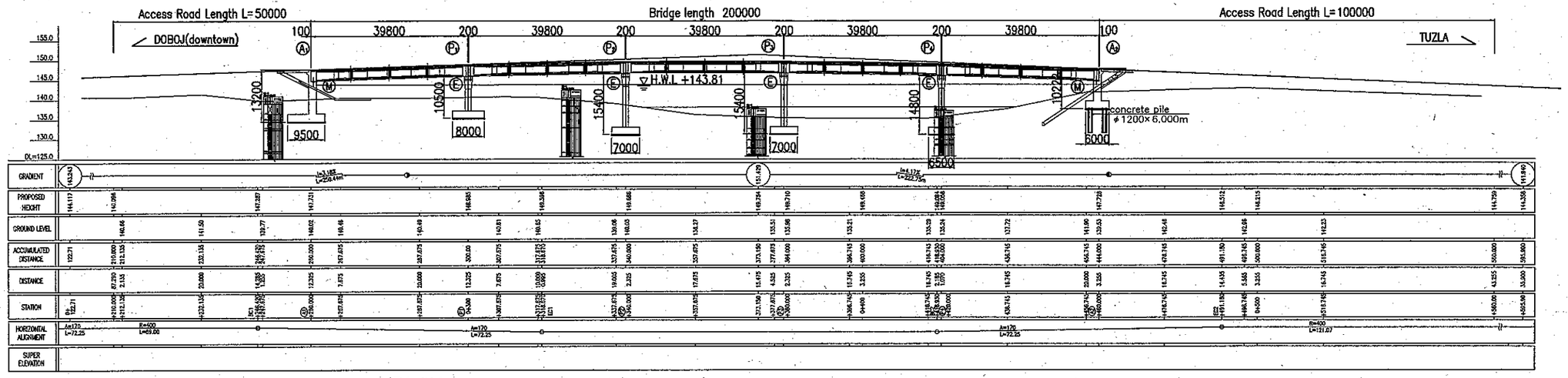

PLAN

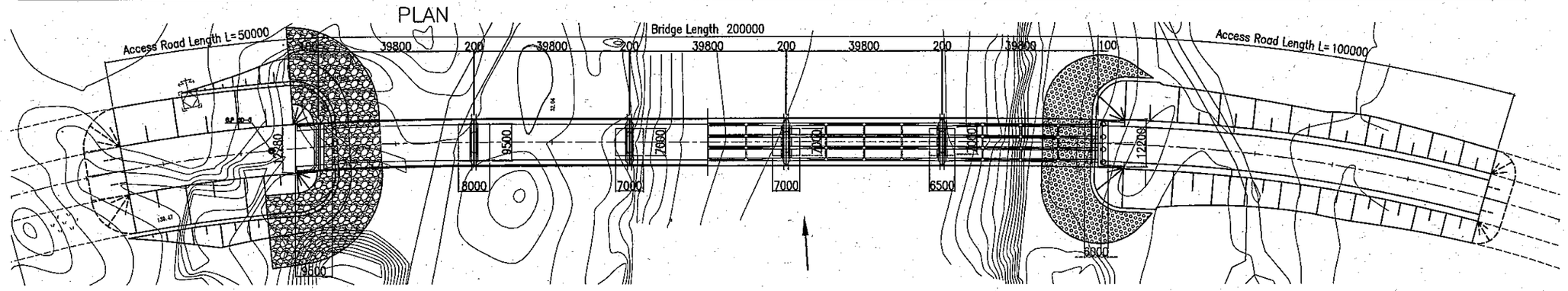

CROSS SETION OF PC-1 GIRDER

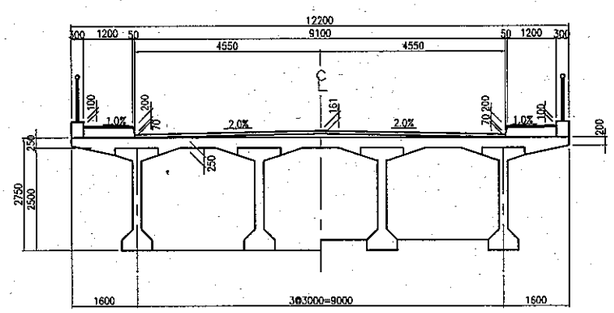

CROSS SETION OF SUBSTRUCTURE

ABUTMENT (A2)

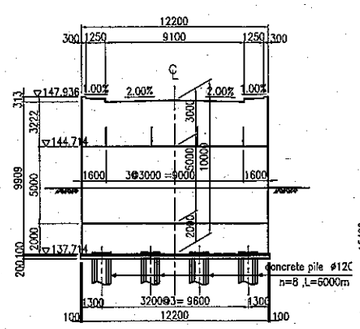

PILAR (P2)

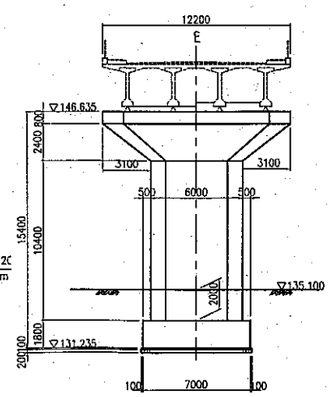

Design Speed			V=80km/h
Bridge Length			L=200m
Span Length			5@38.900m
Total Width			W=12.200m
Longitudinal Gradient			3.18% 4.17%
Cross Gradient			2.000% 2.000%
Superstructure		Superstructure Type	PC Continuous 5 span I-Shape Girder with Post Tentioning
Superstructure	Material	PC	SWPR7B 1ST15.2,SWPR19 1S21.8
Superstructure	Material	Concrete	σ ck=50 N/mm² σ ck=30 N/mm² σ ck=24 N/mm²
Superstructure	Material	Steel Bar	SD345
Substructure		Substructure Type	RC-Reverse T-Shape Abutment, RC Wall Pier
Substructure		Foundation Type	Direct Foundation, Pile Foundation
Substructure	Material	Concrete	σ ck=24 N/mm²
Substructure	Material	Steel Bar	SD345
Substructure	Material	Back Filling	τs=18kN/m3,φ=30°

GENERAL PLAN (MODRICA BRIDGE)

PROFILE

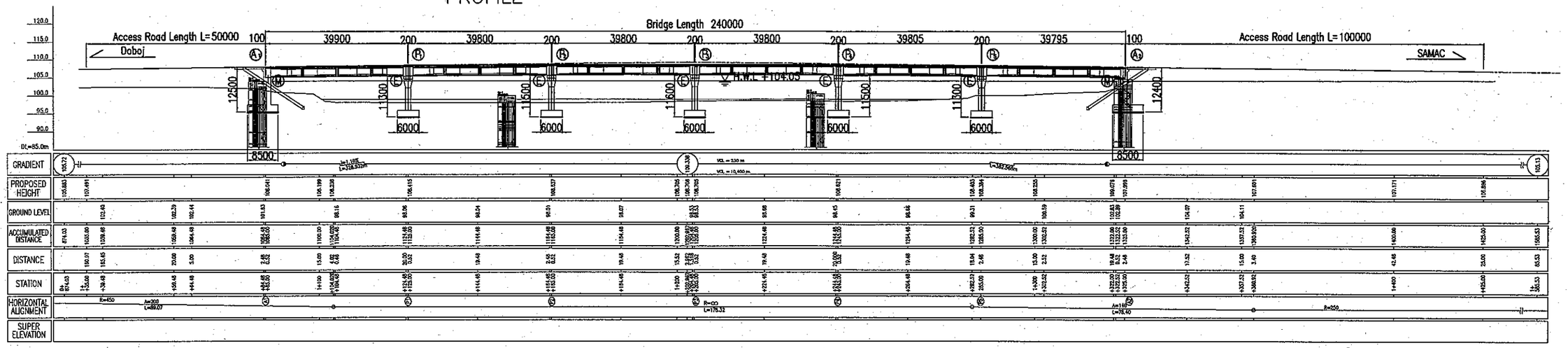

PLAN

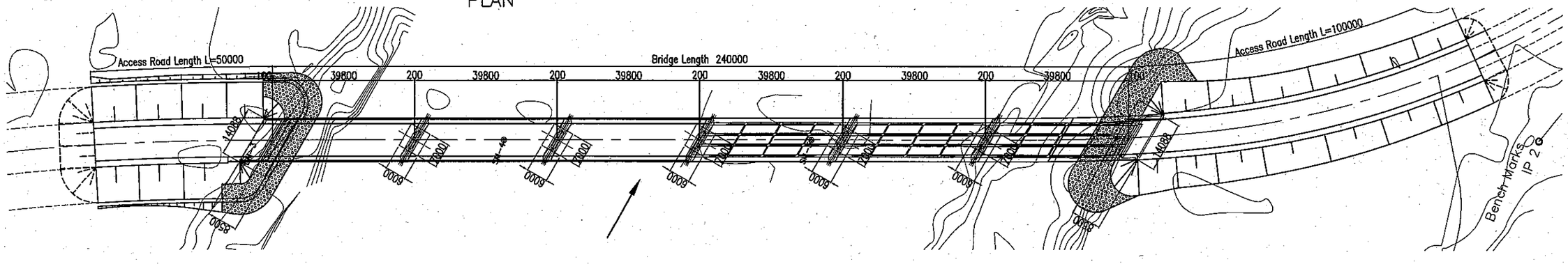

CROSS SECTION OF PC-1 GIRDER

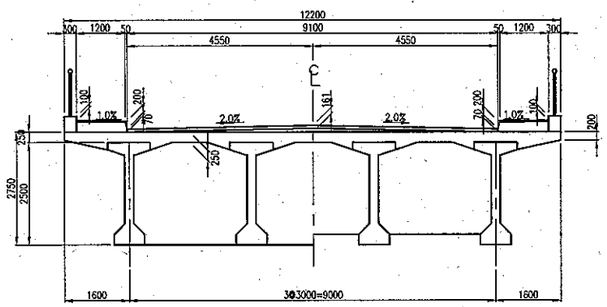

CROSS SETION OF SUBSTRUCTURE

ABUTMENT (A2)

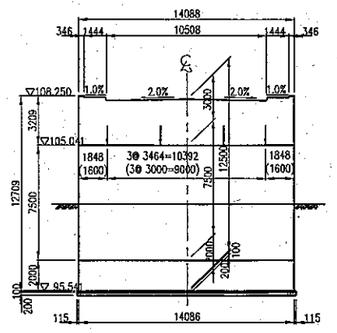

PILAR (P2)

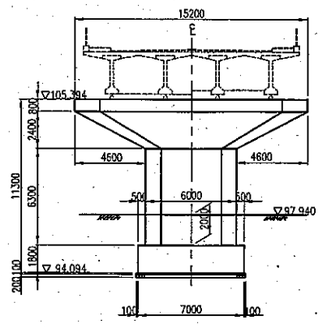

Design Speed			V=80km/h
Bridge Length			L=240m
Span Length			6@38.900m
Total Width			W=12.200m
Longitudinal Gradient			1.10% 1.10%
Cross Gradient			2.000% 2.000%
Superstructure	Superstructure Type		PC Continuous 6 Span I-Shape Girder with Post Tentioning
	Material	PC	SWPR7B 12S15.2,SWPR19 1S21.8
		Concrete	σ ck=50 N/mm² σ ck=30 N/mm² σ ck=24 N/mm²
		Steel Bar	SD345
Substructure	Substructure Type		RC-Reverse T-Shape Abutment, RC Wall Pier
	Foundation Type		Direct Foundation
	Material	Concrete	σ ck=24 N/mm²
		Steel Bar	SD345
		Back Filling	τ s=18kN/m3,φ=30°