SIDE WALK AND RAILING

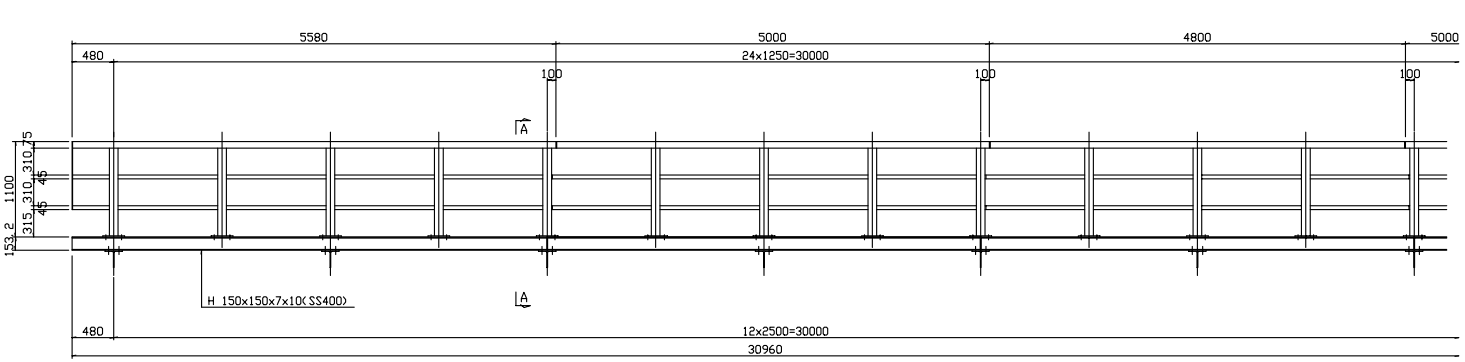

H-1

1-□125x 75x3.2x5580(STKR400)
5-□100x100x3.2x1013(STKR400)
2-□ 75x 45x3.2x 424(STKR400)
8-□ 75x 45x3.2x1150(STKR400)
1-END PL 125x 6x785(SS400)
5-BASE PL 150x12x250(SM400A)
20-HTB M16x55(F8T)

2-PL 100x3.2x180(SS400)
4-PL 60x3.2x104(SS400)

H-2

1-□125x 75x3.2x4990(STKR400)
4-□100x100x3.2x1013(STKR400)
2-□ 75x 45x3.2x1140(STKR400)
6-□ 75x 45x3.2x1150(STKR400)
4-BASE PL 150x12x250(SM400A)
16-HTB M16x55(F8T)

2-PL 100x3.2x180(SS400)
4-PL 60x3.2x104(SS400)

H-3

1-□125x 75x3.2x4780(STKR400)
3-□100x100x3.2x1013(STKR400)
4-□ 75x 45x3.2x1140(STKR400)
4-□ 75x 45x3.2x1150(STKR400)
3-BASE PL 150x12x250(SM400A)
12-HTB M16x55(F8T)

ELEVATION SCALE 1:30

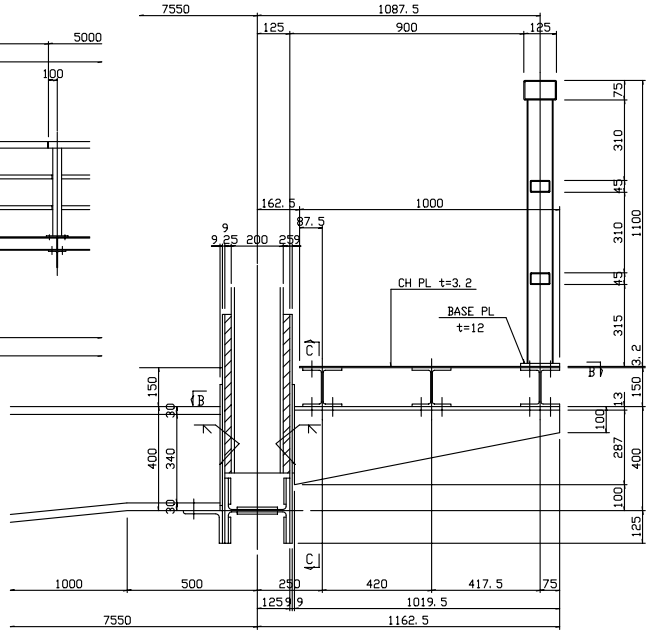

A - A

CROSS SECTION SCALE 1:10

3-H 150x150x7x10x5475(SS400)
1-CH PL 1000x3.2x5475(SS400)
30-HTB M16x55(F8T)
43-BN M10x30(SS400)

3-H 150x150x7x10x4990(SS400)
1-CH PL 1000x3.2x4990(SS400)
24-HTB M16x55(F8T)
38-BN M10x30(SS400)

3-H 150x150x7x10x4990(SS400)
1-CH PL 1000x3.2x4990(SS400)
24-HTB M16x55(F8T)
38-BN M10x30(SS400)

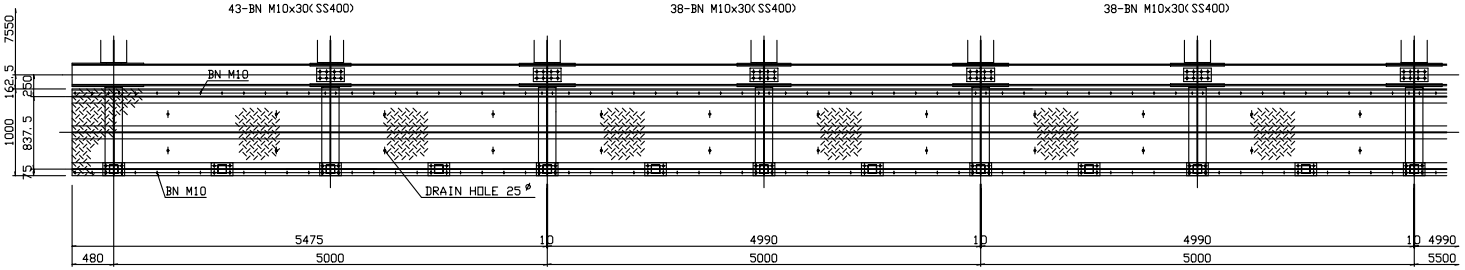

PLAN SCALE 1:30

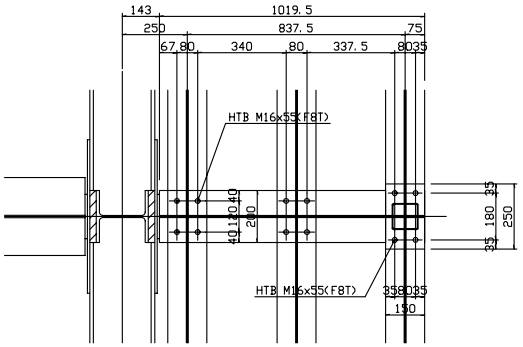

B - B

(x13) 1-H 400x200x8x13x1020(SM400)
1-PL 170x 9x 340(SM400A)

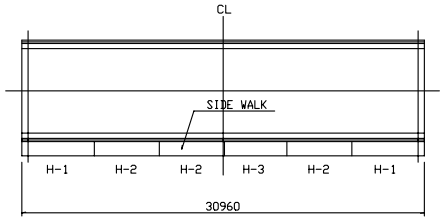

KEY PLAN

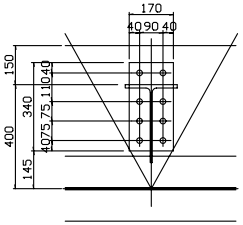

C - C

Note
All dimensions are shown in millimeter unless otherwise indicated.

GOVERNMENT OF THE REPUBLIC OF VANUATU PUBLIC WORKS DEPARTMENT	JAPAN INTERNATIONAL COOPERATION AGENCY KATAHIRA & ENGINEERS INTERNATIONAL	PROJECT : BASIC DESIGN STUDY ON THE PROJECT FOR THE REHABILITATION OF BRIDGES ON THE RING ROAD IN THE EFATE ISLAND	TITLE : SIDE WALK AND RAILING (TEOUMA BRIDGE)	DRAWING No: 8 Rv.

MATERIAL LIST OF SUPERSTRUCTURE

(TEOUMA BRIDGE)

	MATERIAL	SIZE	U-CHORD UC	L-CHORD LC	DIAGONAL DG	VERTICAL VT	C-BEAM CB	STRINGER ST	BRACKET BR	LATERAL LL	BEARING SH	STEEL-S SS	SIDEWALK SW	RAILLING HR	TOTAL
PL	SM490B	30					13,353								13,353
	SM490A	16	626	1,270	2,312										4,208
		11					3,588								3,588
		9	1,316	2,092	566		144								4,118
		SUB TOTAL	1,942	3,362	2,878		3,732								11,914
	SM400A	22		62											62
		12												89	89
		9		18			145		52	24					239
		SUB TOTAL		80			145		52	24				89	390
	SS400	25	788	972											1,760
		9	680	548											1,228
		6												10	10
		3.2												10	10
		2.3	8	8											16
		SUB TOTAL	1,476	1,528										20	3,024
	PLATE TOTAL		3,418	4,970	2,878		17,230		52	24				109	28,681
H	SM400	400x200x 8							429						429
	SM490	250x250x 9	1,430	1,430				10,880							13,740
	SS400	250x250x 9	1,462	1,564	2,542										5,568
		200x200x 8			1,764	4,552									6,316
		150x150x 7											2,884		2,884
		SUB TOTAL	2,892	2,994	4,306	4,552		10,880	429				2,884		28,937
L	SS400	150x150x 12					227	1,210							1,437
		150x 90x 9										236			236
		90x 90x 10								438					438
		SUB TOTAL					227	1,210		438		236			2,111
ST	STKR400	125x 75x3.2												296	296
		100x100x3.2												242	242
		75x 45x3.2												315	315
		SUB TOTAL												853	853
RB	SS400	16φ										588			588
DK	SS400	570 x 4										11,146			11,146
		445 x 4										290			290
		SUB TOTAL										11,436			11,436
CP	SS400	3.2											828		828
SC	SC450	100ton-F									404				404
		100ton-M									382				382
		SUB TOTAL									786				786
BN	SS400	M 10											11		11
HT	F8T	M 22	1,014	1,250			33	445		20					2,762
		M 16										279	35	25	339
TOTAL			7,324	9,214	7,184	4,552	17,490	12,535	481	482	786	12,539	3,758	987	77,332

	MATERIAL	SIZE	U-CHORD UC	L-CHORD LC	C-BEAM CB	STRINGER ST	LATERAL LL	STEEL-S SS	SIDEWALK SW	RAILLING HR	TOTAL
HT	F8T	M 22x 95	528	856	52		16				1,452
		M 22x 75	1,184	1,224		780	16				3,204
		M 16x 55						1,240	156	100	1,496
		SUB TOTAL	1,712	2,080	52	780	32	1,240	156	100	6,152
BN	SS400	M 10x 30							238		238

Deck Slab

Item		Unit	Quantity	Notes
Sprayed Seal		m^2	201.24	t=17mm
Concrete	Slab	m^3	27.94	
	Curb	m^3	5.42	
	Total	m^3	33.36	
Form Panel	Slab	m^2	9.29	
	Curb	m^2	30.96	
	Total	m^2	40.25	
Steel Reinforcement Mesh		m^2	222.91	6φ-150x150

Reinforcement

NO.	Diameter	Length (mm)	Quantity	Weight(kg) kg/m	kg/each	Total	Remark
①	D13	7000	32	0.995	7.000	224	——
①'	D13	4030	8	0.995	4.000	32	——
②	D13	930	244	0.995	0.900	220	⊓
③	D13	910	30	0.995	0.900	27	∿
④	D13	910	30	0.995	0.900	27	∿
				TOTAL	D13	530 kg	

GOVERNMENT OF THE REPUBLIC OF VANUATU PUBLIC WORKS DEPARTMENT	JAPAN INTERNATIONAL COOPERATION AGENCY KATAHIRA & ENGINEERS INTERNATIONAL	PROJECT : BASIC DESIGN STUDY ON THE PROJECT FOR THE REHABILITATION OF BRIDGES ON THE RING ROAD IN THE EFATE ISLAND	TITLE : MATERIAL LIST OF SUPERSTRUCTURE (TEOUMA BRIDGE)	DRAWING No: 9

STRUCTURE DRAWING OF A1-ABUTMENT SCALE 1:100

Design Criteria of Substructures

1. Type of Aboutment
   Inverted-T wall type aboutment
2. Type of Foundations
   Rolled steel H-beam 300x300
3. Design Criteria of stress
   - Concrete : Fc=21KN/mm²
   - Reinforcement bar :Stress for yield point Fr=295KN/mm²
4. Earthquake Load
   Horizontal seismic coefficient = 0.26
   (for the design of anchor bolt of bearing and substructure)
5. Covering of Concrete
   Minimum covering is 70 millimeters

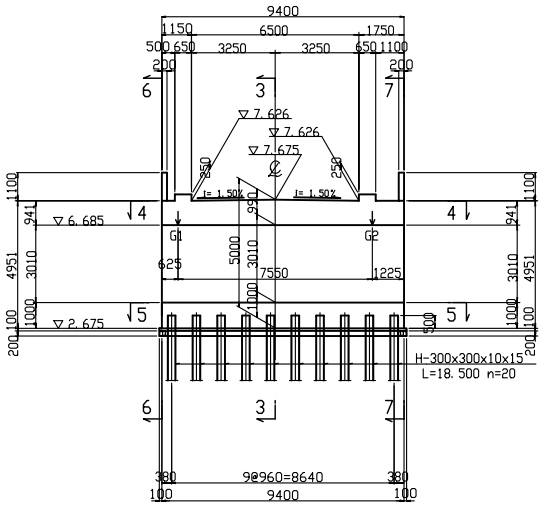

1 - 1

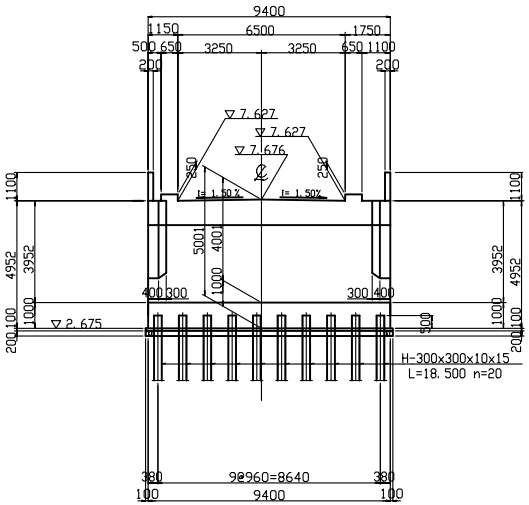

2 - 2

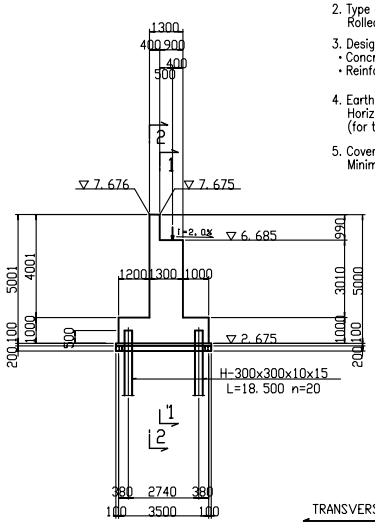

3 - 3

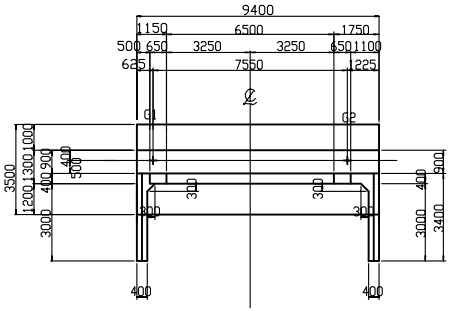

4 - 4

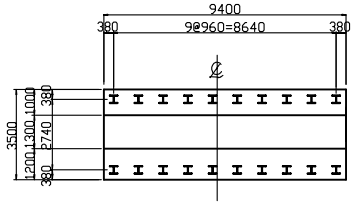

5 - 5

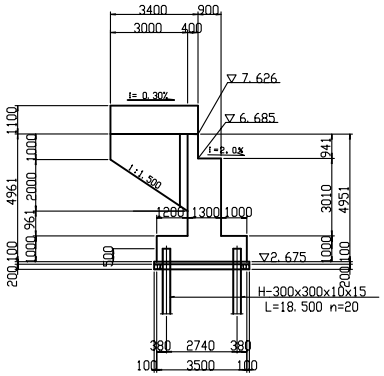

6 - 6

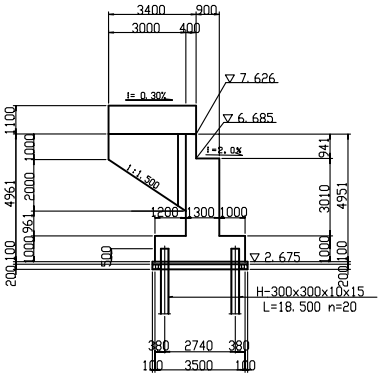

7 - 7

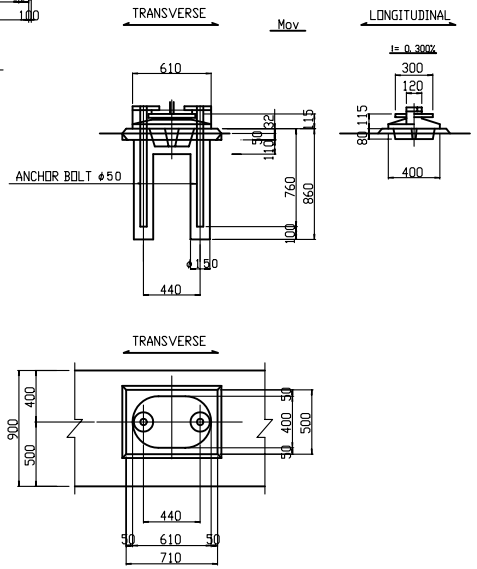

DETAILS OF SUPPORT ANCHOR SCALE 1:20

Note
All dimensions are shown in millimeter unless otherwise indicated.

GOVERNMENT OF THE REPUBLIC OF VANUATU PUBLIC WORKS DEPARTMENT	JAPAN INTERNATIONAL COOPERATION AGENCY KATAHIRA & ENGINEERS INTERNATIONAL	PROJECT : BASIC DESIGN STUDY ON THE PROJECT FOR THE REHABILITATION OF BRIDGES ON THE RING ROAD IN THE EFATE ISLAND	TITLE : STRUCTURE DRAWING OF A1-ABUTMENT (TEOUMA BRIDGE)	DRAWING No: 10

STRUCTURE DRAWING OF A2-ABUTMENT SCALE 1:100

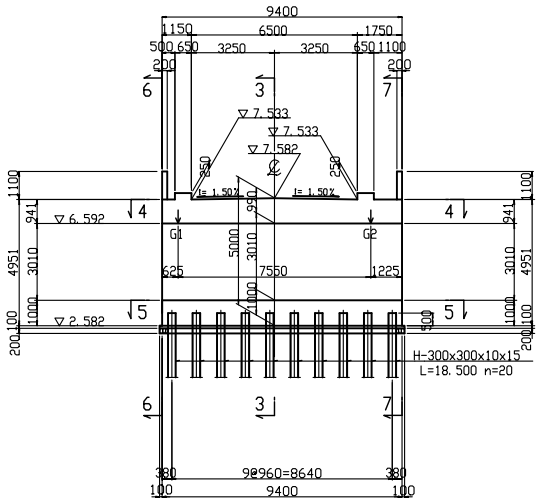

1 - 1

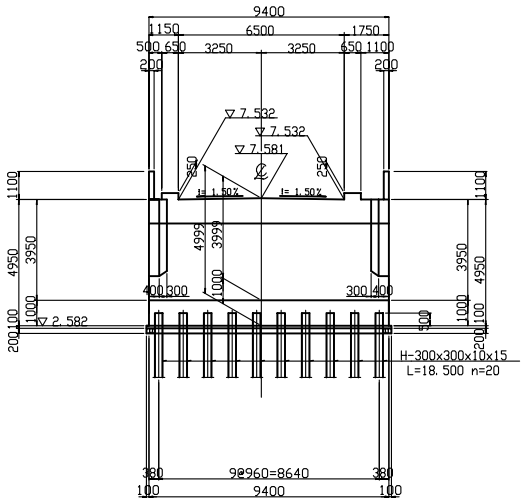

2 - 2

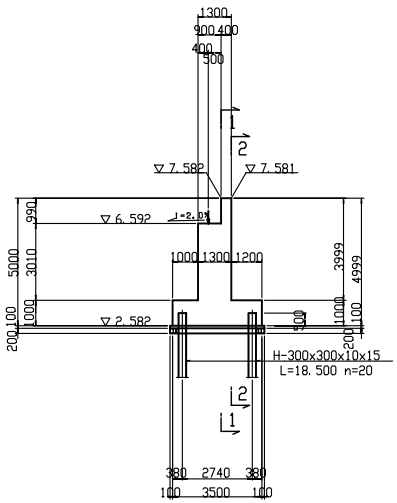

3 - 3

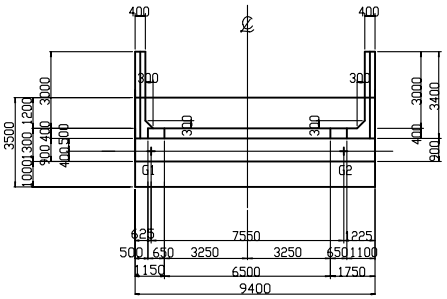

4 - 4

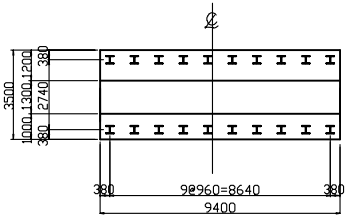

5 - 5

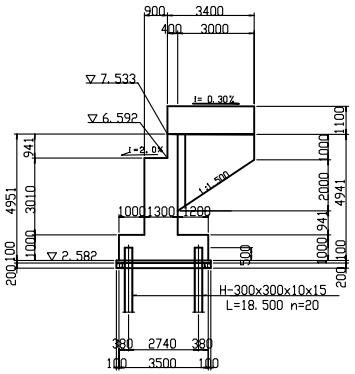

6 - 6

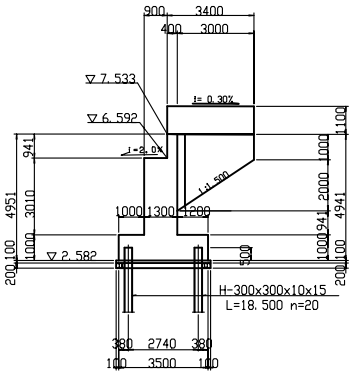

7 - 7

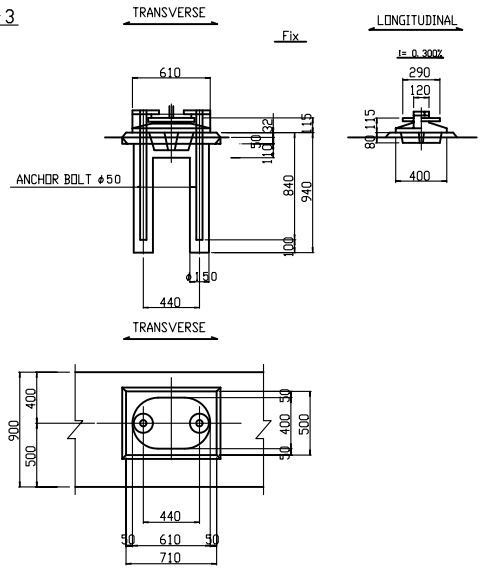

DETAILS OF SUPPORT ANCHOR SCALE 1:20

Note
All dimensions are shown in millimeter unless otherwise indicated.

GOVERNMENT OF THE REPUBLIC OF VANUATU PUBLIC WORKS DEPARTMENT	JAPAN INTERNATIONAL COOPERATION AGENCY KATAHIRA & ENGINEERS INTERNATIONAL	PROJECT : BASIC DESIGN STUDY ON THE PROJECT FOR THE REHABILITATION OF BRIDGES ON THE RING ROAD IN THE EFATE ISLAND	TITLE : STRUCTURE DRAWING OF A2-ABUTMENT (TEOUMA BRIDGE)	DRAWING No: 11 Rv.

BAR ARRANGEMENT OF ABUTMENT A1,A2 (1) SCALE 1 : 50

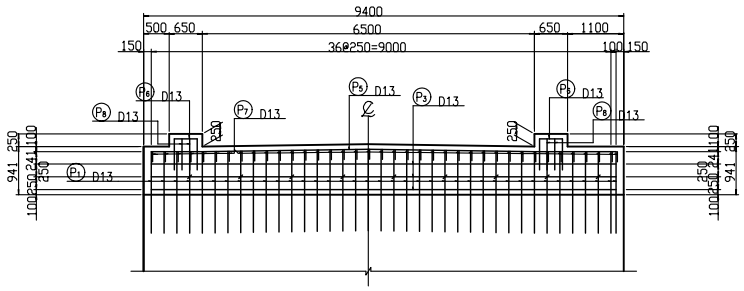

1 - 1

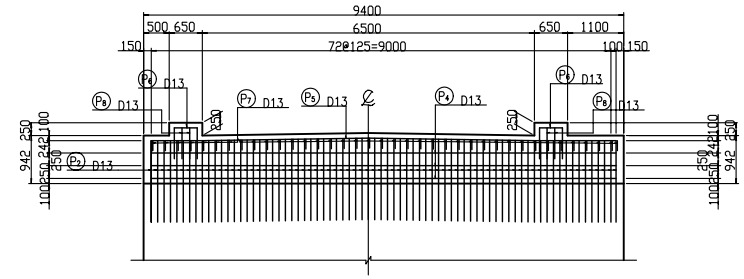

2 - 2

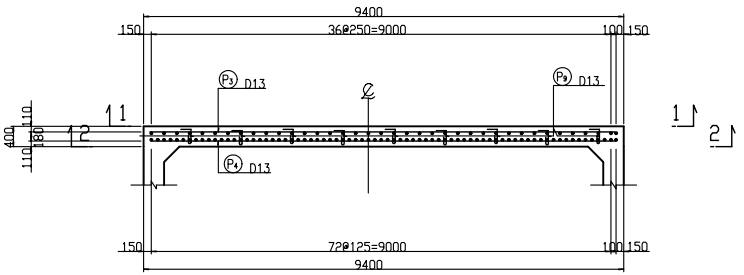

3 - 3

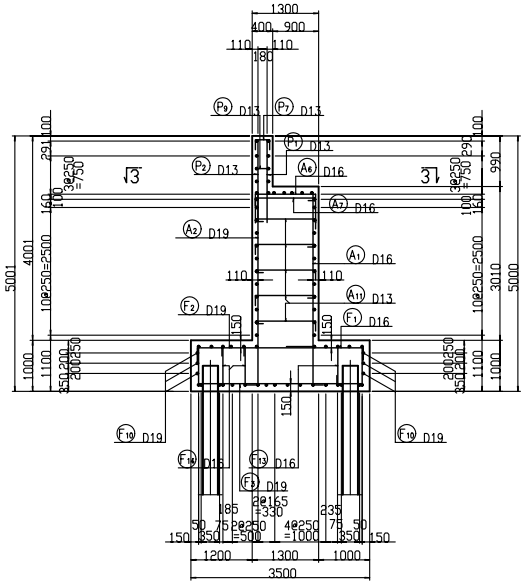

4 - 4

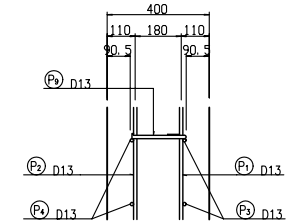

Re-bar and Con. Cover at Parapet

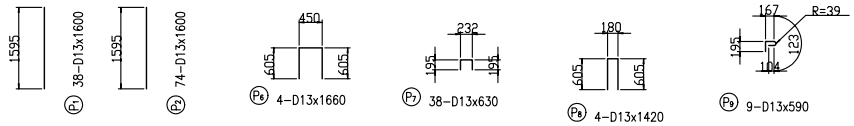

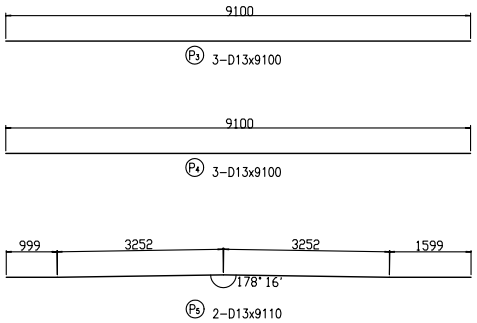

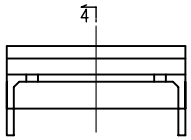

KEY PLAN

Note
All dimensions are shown in millimeter unless otherwise indicated.

GOVERNMENT OF THE REPUBLIC OF VANUATU PUBLIC WORKS DEPARTMENT	JAPAN INTERNATIONAL COOPERATION AGENCY KATAHIRA & ENGINEERS INTERNATIONAL	PROJECT : BASIC DESIGN STUDY ON THE PROJECT FOR THE REHABILITATION OF BRIDGES ON THE RING ROAD IN THE EFATE ISLAND	TITLE : BAR ARRANGEMENT OF ABUTMENT A1,A2 (1) (TEOUMA BRIDGE)	DRAWING No: 12 Rv.

BAR ARRANGEMENT OF ABUTMENT A1,A2 (2) SCALE 1:50

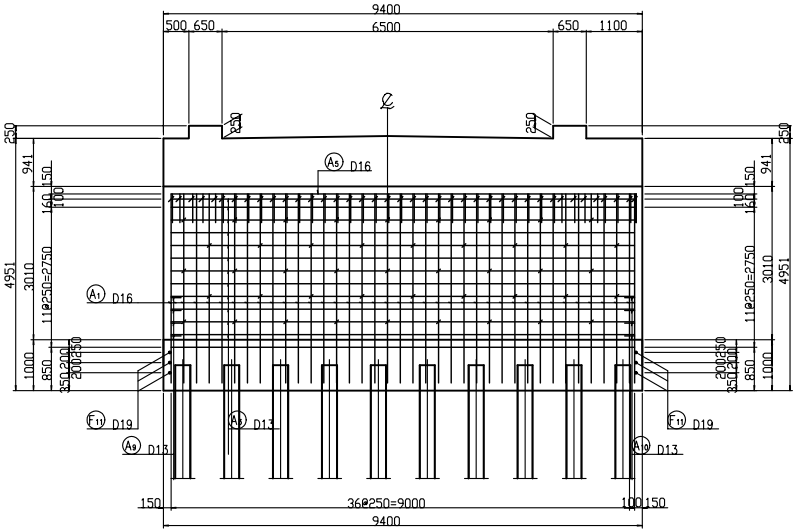

5 - 5

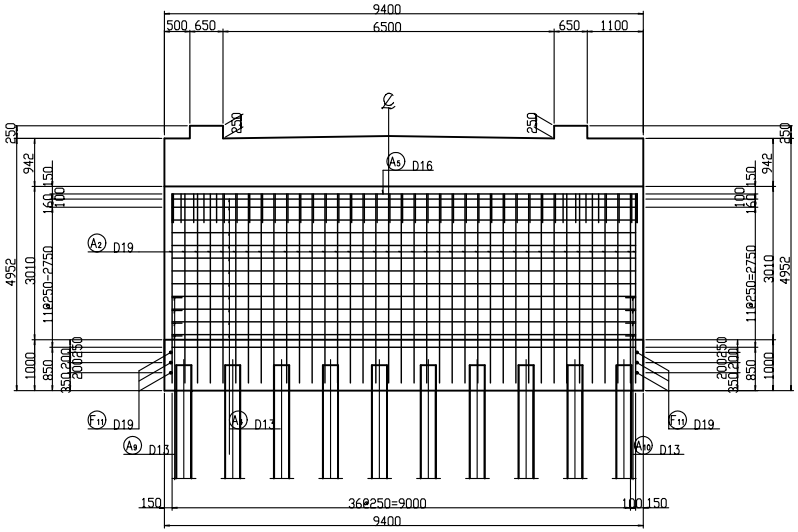

6 - 6

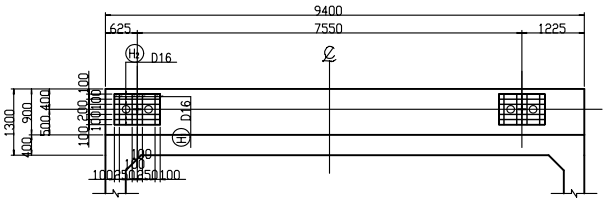

REINFORCING BAR OF BASE

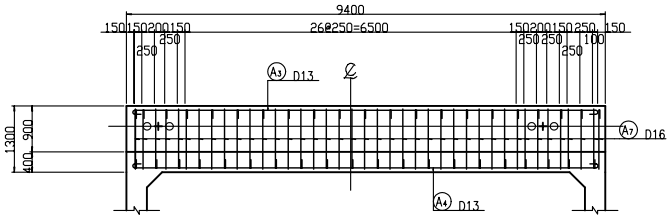

8 - 8

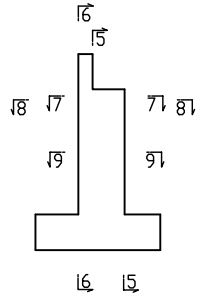

KEY ELEVATION

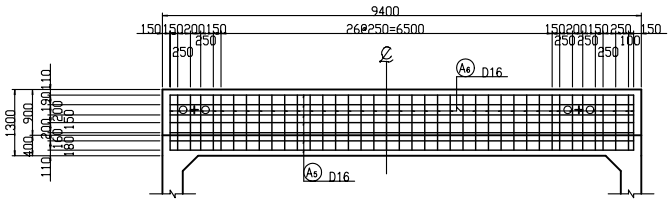

7 - 7

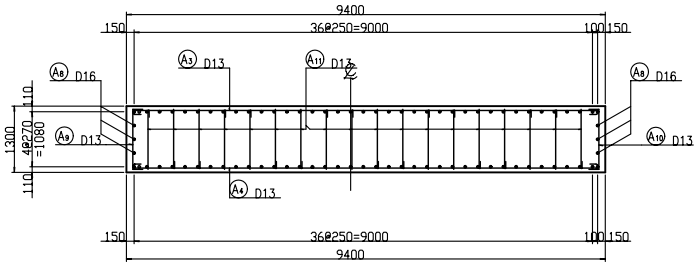

9 - 9

Note
All dimensions are shown in millimeter unless otherwise indicated.

GOVERNMENT OF THE REPUBLIC OF VANUATU PUBLIC WORKS DEPARTMENT	JAPAN INTERNATIONAL COOPERATION AGENCY KATAHIRA & ENGINEERS INTERNATIONAL	PROJECT : BASIC DESIGN STUDY ON THE PROJECT FOR THE REHABILITATION OF BRIDGES ON THE RING ROAD IN THE EFATE ISLAND	TITLE : BAR ARRANGEMENT OF ABUTMENT A1,A2 (2) (TEOUMA BRIDGE)	DRAWING No: 13 Rv.

BAR ARRANGEMENT OF ABUTMENT A1,A2 (3) SCALE 1 : 50

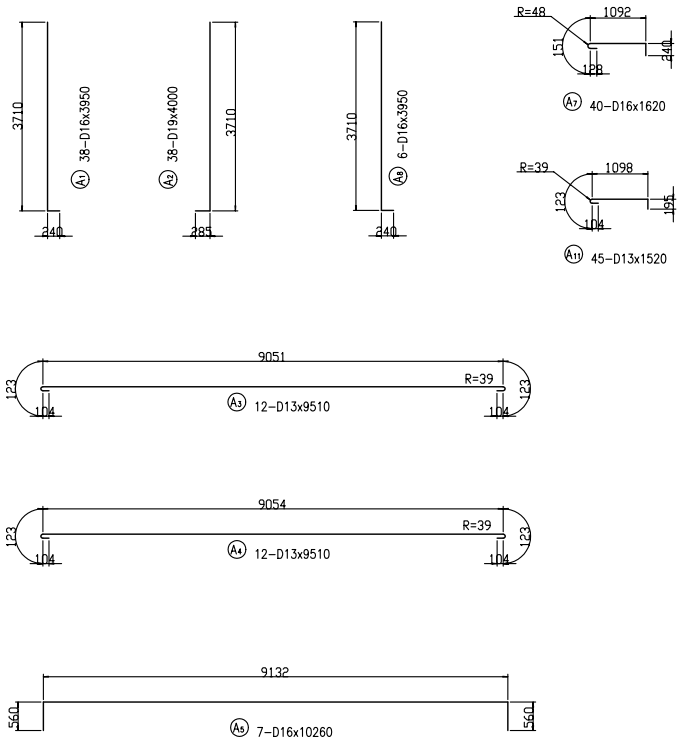

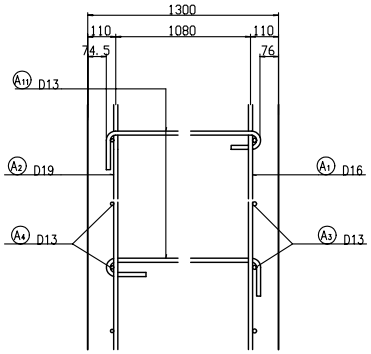

Re-Bar & Con. Cover at Wall

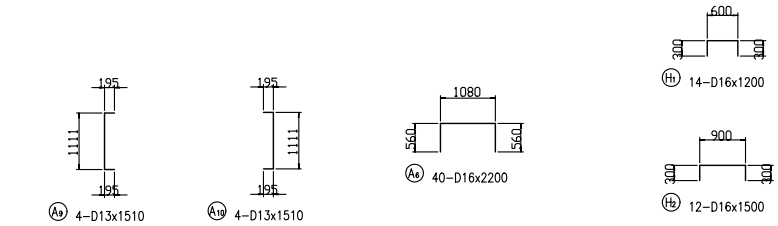

Note
All dimensions are shown in millimeter unless otherwise indicated.

GOVERNMENT OF THE REPUBLIC OF VANUATU PUBLIC WORKS DEPARTMENT	JAPAN INTERNATIONAL COOPERATION AGENCY KATAHIRA & ENGINEERS INTERNATIONAL	PROJECT : BASIC DESIGN STUDY ON THE PROJECT FOR THE REHABILITATION OF BRIDGES ON THE RING ROAD IN THE EFATE ISLAND	TITLE : BAR ARRANGEMENT OF ABUTMENT A1,A2 (3) (TEOUMA BRIDGE)	DRAWING No: 14 Rv.

BAR ARRANGEMENT OF ABUTMENT A1,A2 (4) SCALE 1 : 50

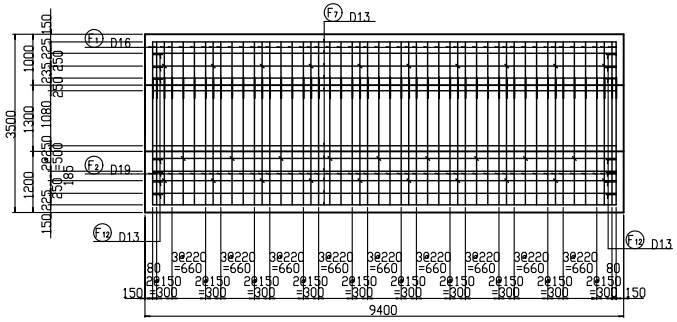

10 - 10

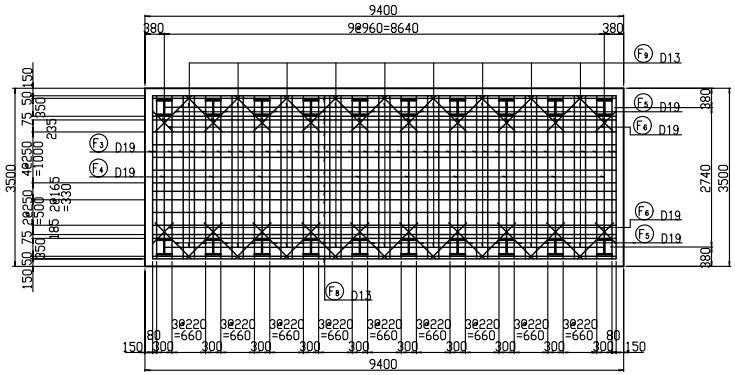

11 - 11

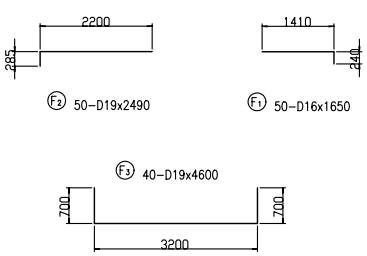

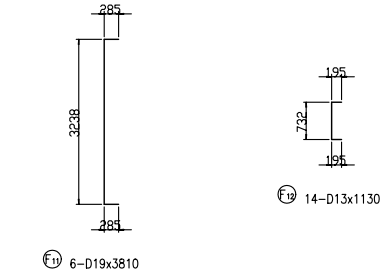

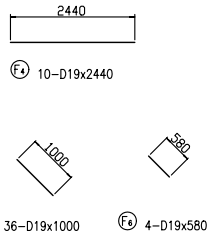

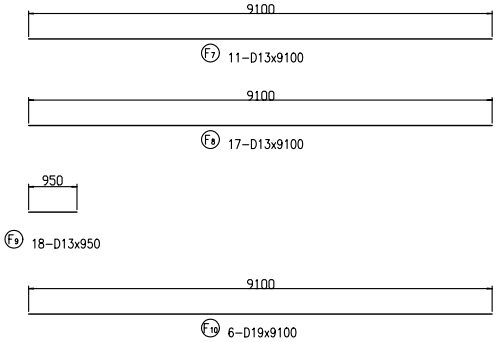

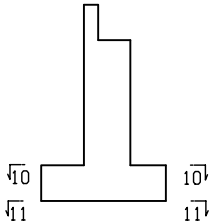

KEY ELEVATION

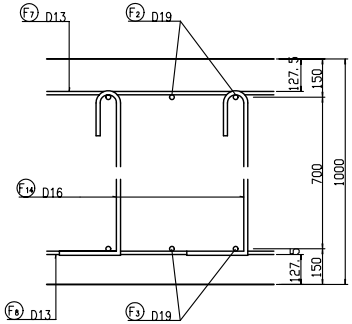

BACK SIDE

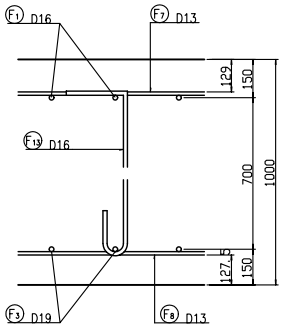

FRONT SIDE

DETAIL OF FOOTING

Note
All dimensions are shown in millimeter unless otherwise indicated.

GOVERNMENT OF THE REPUBLIC OF VANUATU PUBLIC WORKS DEPARTMENT	JAPAN INTERNATIONAL COOPERATION AGENCY KATAHIRA & ENGINEERS INTERNATIONAL	PROJECT : BASIC DESIGN STUDY ON THE PROJECT FOR THE REHABILITATION OF BRIDGES ON THE RING ROAD IN THE EFATE ISLAND	TITLE : BAR ARRANGEMENT OF ABUTMENT A1,A2 (4) (TEOUMA BRIDGE)	DRAWING No: 15

BAR ARRANGEMENT OF ABUTMENT A1,A2 (5) SCALE 1 : 50

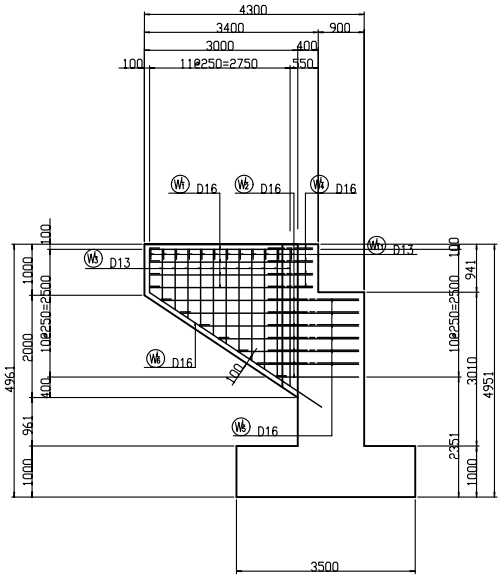

12 - 12

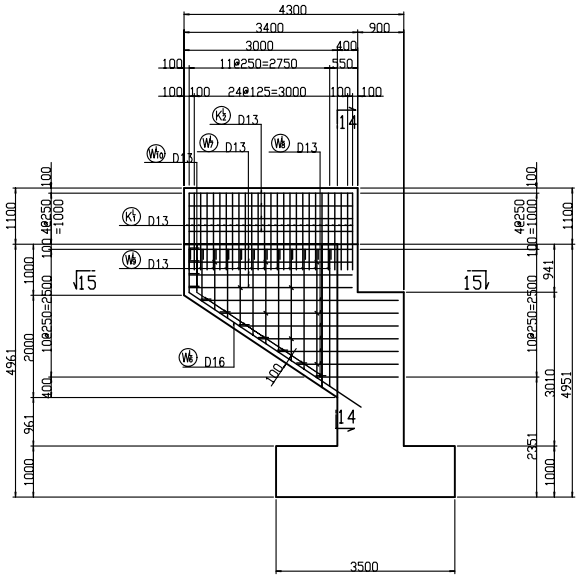

13 - 13

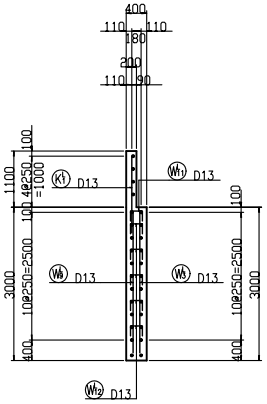

14 - 14

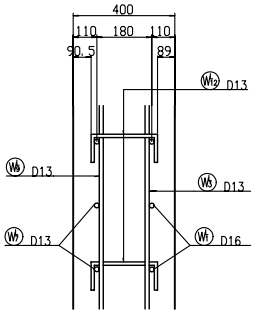

DETAIL OF WING WALL

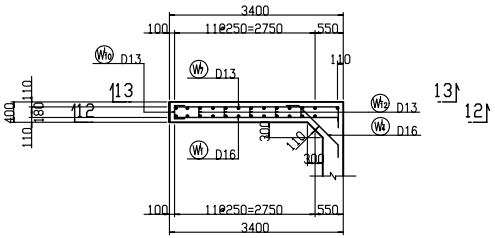

15 - 15

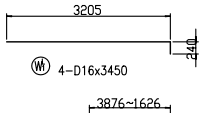

4-D16x3450

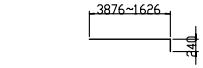

7-D16x3000(min)

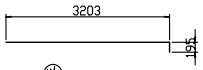

4-D13x3400

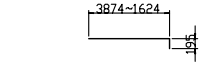

7-D13x2950 (min)

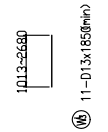

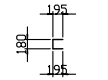

11-D13x570

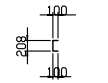

9-D13x410

12-D13x550

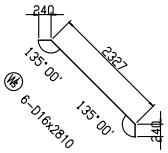

6-D16x2810

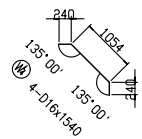

4-D16x1540

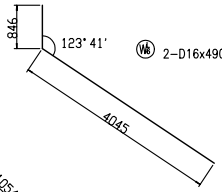

2-D16x4900

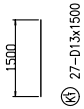

27-D13x1500

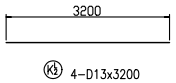

4-D13x3200

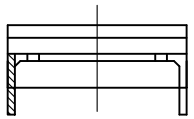

KEY PLAN

Note
All dimensions are shown in millimeter unless otherwise indicated.

GOVERNMENT OF THE REPUBLIC OF VANUATU PUBLIC WORKS DEPARTMENT	JAPAN INTERNATIONAL COOPERATION AGENCY KATAHIRA & ENGINEERS INTERNATIONAL	PROJECT : BASIC DESIGN STUDY ON THE PROJECT FOR THE REHABILITATION OF BRIDGES ON THE RING ROAD IN THE EFATE ISLAND	TITLE : BAR ARRANGEMENT OF ABUTMENT A1,A2 (5) (TEOUMA BRIDGE)	DRAWING No: 16

BAR ARRANGEMENT OF ABUTMENT A1,A2 (6) SCALE 1 : 50

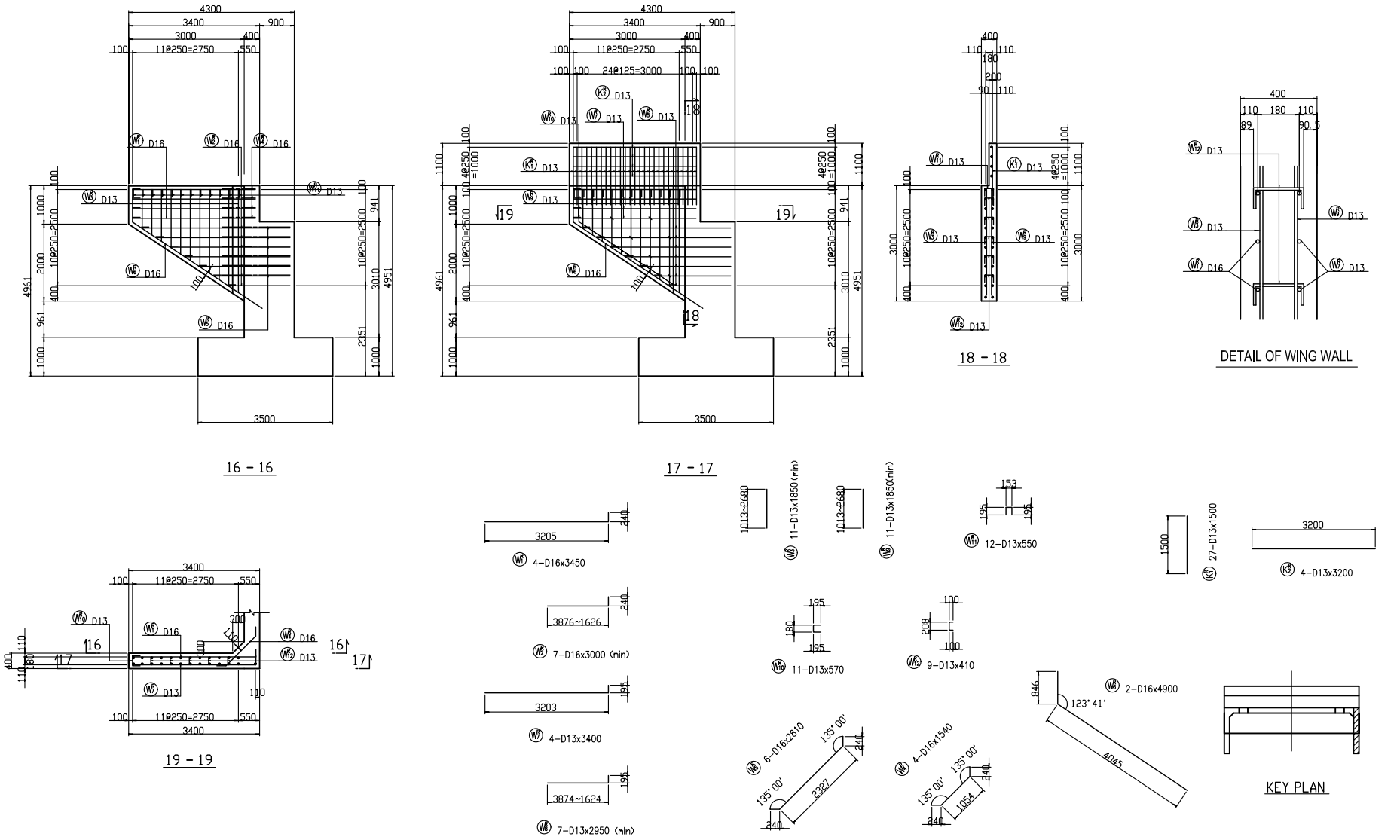

Note
All dimensions are shown in millimeter unless otherwise indicated.

GOVERNMENT OF THE REPUBLIC OF VANUATU PUBLIC WORKS DEPARTMENT	JAPAN INTERNATIONAL COOPERATION AGENCY KATAHIRA & ENGINEERS INTERNATIONAL	PROJECT : BASIC DESIGN STUDY ON THE PROJECT FOR THE REHABILITATION OF BRIDGES ON THE RING ROAD IN THE EFATE ISLAND	TITLE : BAR ARRANGEMENT OF ABUTMENT A1,A2 (6) (TEOUMA BRIDGE)	DRAWING No: 17

DETAIL OF FOUNDATION PILE

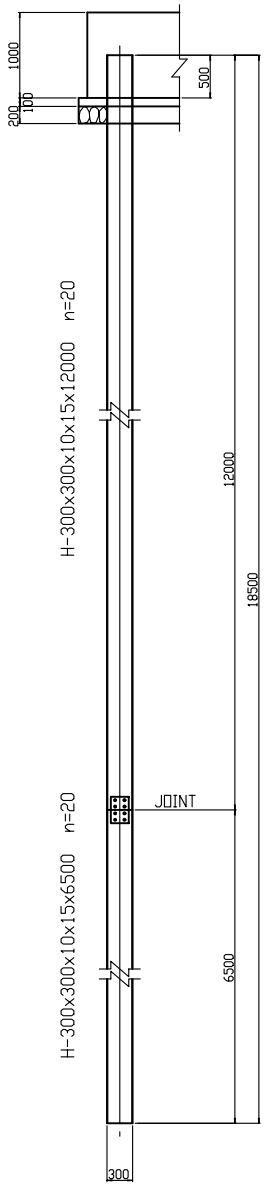

SIDE ELEVATION SCALE 1 : 30

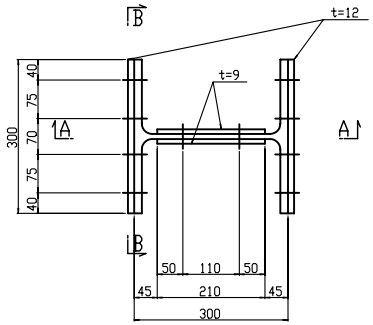

PLAN

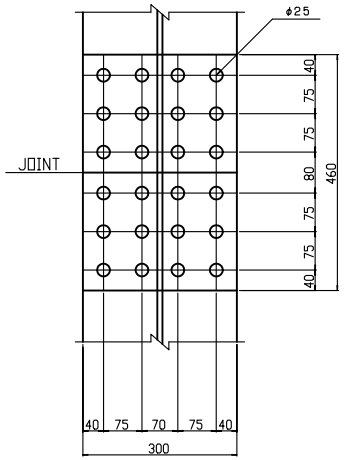

B-B

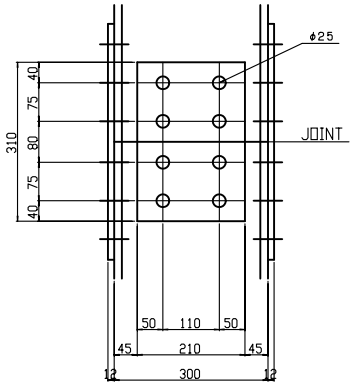

A-A

2-PL 300x12x460
2-PL 210x 9x310
56-BN M22x55

DETAIL OF JOINT SCALE 1 : 5

MATERIAL LIST

Unit : kg

ITEM	SECTION	LENGTH	NO.	UNIT WT.	WT/ONE	WEIGHT	REMARKS
PER ONE PILE							
H	H-300x300x10x15	12000	1	93.00	1116	1116	SS400
H	H-300x300x10x15	6500	1	93.00	605	605	SS400
					TOTAL	1721	
PL	300x12	460	2		13.0	26	SS400
〃	210x 9	310	2		4.6	9	SS400
BN	M22x55		56		0.34	19	SS400
					TOTAL	54	
PER ONE ABUTMENT(20 PILES)							
H	H-300x300x10x15	12000	20	93.00	1116	22320	SS400
H	H-300x300x10x15	6500	20	93.00	605	12090	SS400
					TOTAL	34410	
PL	300x12	460	40		13.0	520	SS400
〃	210x 9	310	40		4.6	184	SS400
BN	M22x55		1120		0.34	381	SS400
					TOTAL	1085	

KEY PLAN SCALE 1 : 100

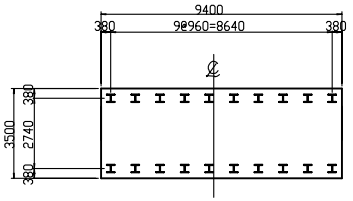

Note
All dimensions are shown in millimeter unless otherwise indicated.

GOVERNMENT OF THE REPUBLIC OF VANUATU PUBLIC WORKS DEPARTMENT	JAPAN INTERNATIONAL COOPERATION AGENCY KATAHIRA & ENGINEERS INTERNATIONAL	PROJECT : BASIC DESIGN STUDY ON THE PROJECT FOR THE REHABILITATION OF BRIDGES ON THE RING ROAD IN THE EFATE ISLAND	TITLE : DETAIL OF FOUNDATION PILE (TEOUMA BRIDGE)	DRAWING No: 18