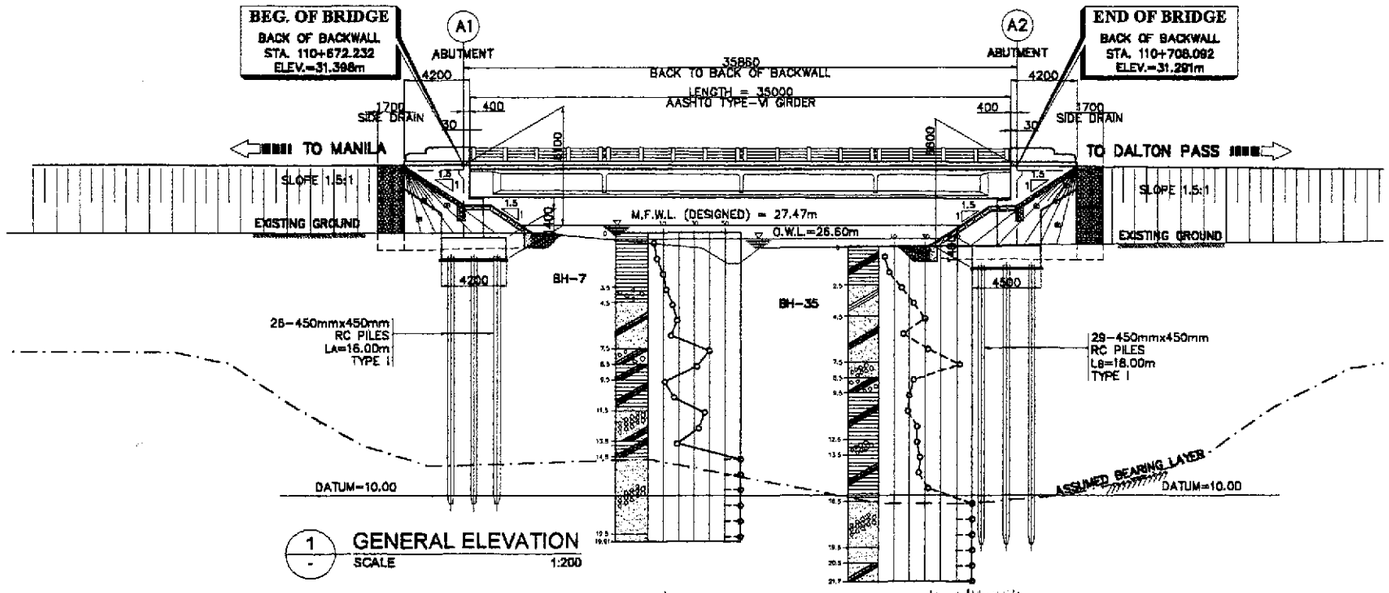

1 GENERAL ELEVATION
SCALE 1:200

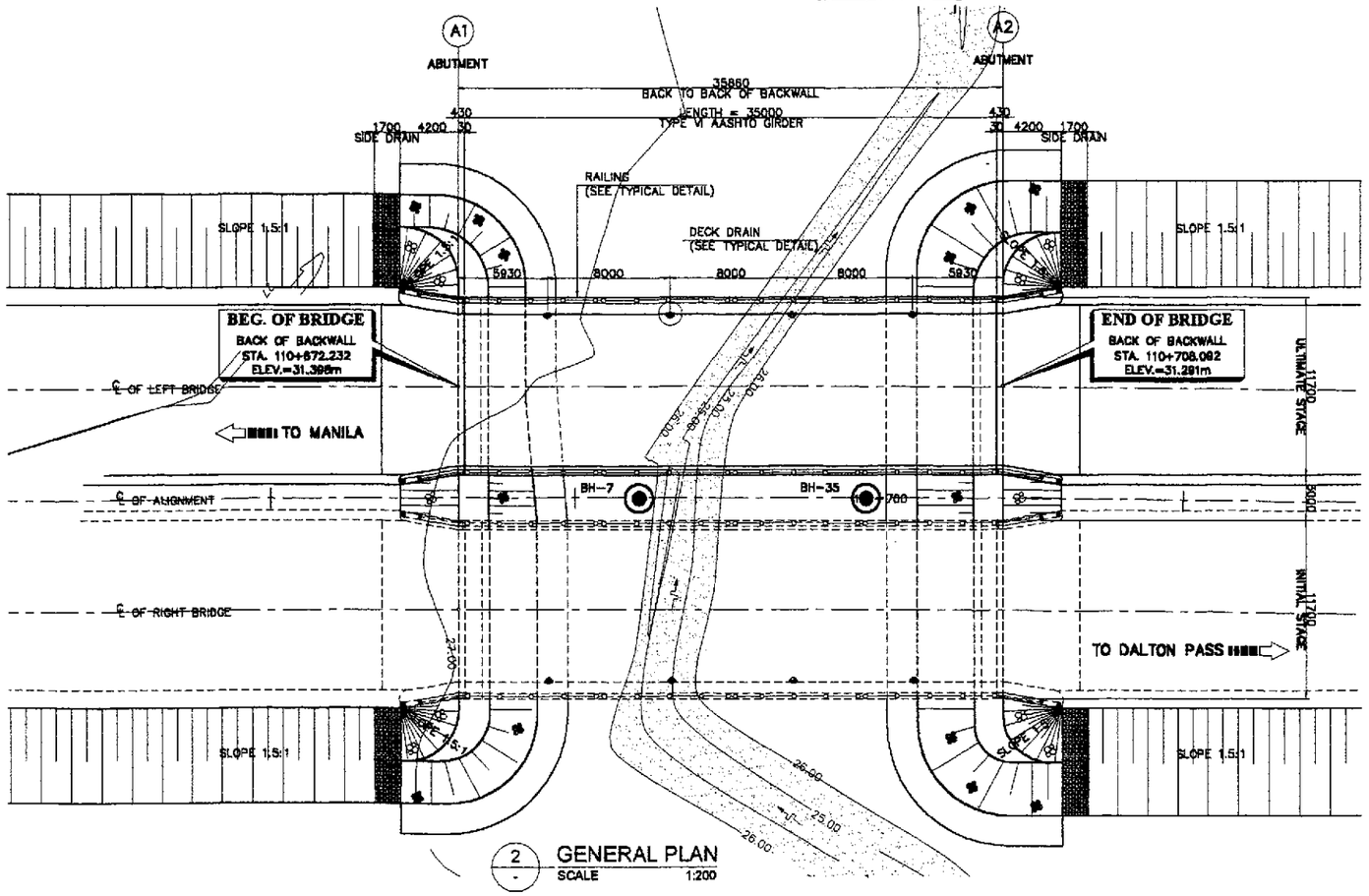

2 GENERAL PLAN
SCALE 1:200

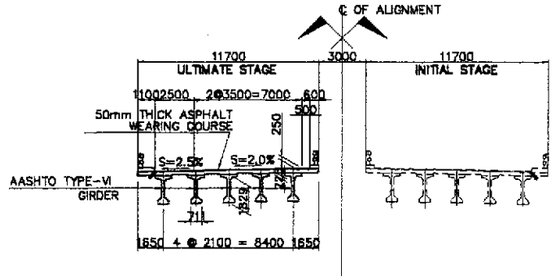

3 SECTION @ MIDSPAN
SCALE 1:200

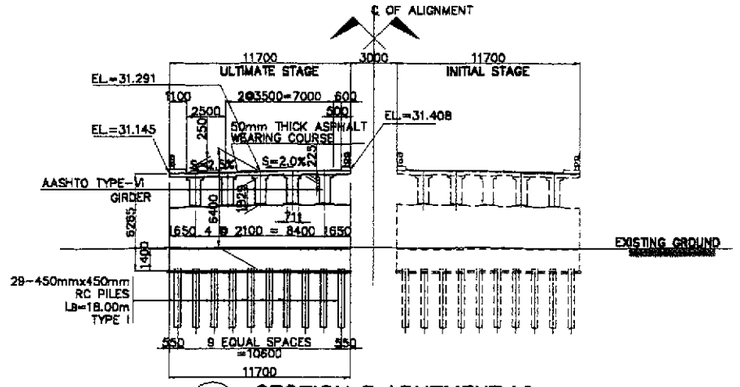

4 SECTION @ ABUTMENT A2
SCALE 1:200

HYDRAULIC DESIGN DATA	
VELOCITY @ 50 YEARS, Vso	2.235 m/sec
DISCHARGE @ 50 YEARS, Qso	40.600 cu.m/sec
CATCHMENT AREA, CA	11.175 sq. km

NOTE :

PRIOR TO CONSTRUCTION SOIL INVESTIGATION AT ABUTMENT A1 SHALL BE CONDUCTED FOR CONFIRMATION OF ASSUMED BEARING CAPACITY AND FOOTING ELEVATION.

THE PILE LENGTH RECOMMENDED ARE MINIMUM. SHOULD THE SOIL AT THE RECOMMENDED LENGTH BE INADEQUATE BEARING MATERIAL, LENGTH SHALL BE INCREASED. THE MINIMUM EMBEDMENT LENGTH INTO ADEQUATE SOIL FOR 400 x 400 R. C. PILE IS 1000mm WHILE FOR 450 x 450 R. C. PILE IS 1200mm.

A CABANATUAN BYPASS BRIDGE NO.3 (STA.110+672.232)
SCALE AS SHOWN

PERFECTO L. ZAPLAN JR.
OIC Chief, Hydraulics Division, BOD

JICA
JAPAN INTERNATIONAL COOPERATION AGENCY
KEI KATAHIRA & ENGINEERS INTERNATIONAL
YEC YACHIYO ENGINEERING CO., LTD.

	DATE	SIGNATURE
DESIGNED	10/09/02	E.N. SALLAN
CHECKED	10/10/02	
SUBMITTED	10/18/02	TEAM LEADER

REPUBLIC OF THE PHILIPPINES
DEPARTMENT OF PUBLIC WORKS AND HIGHWAYS

PJHL – PMO	BUREAU OF DESIGN		OFFICE OF THE SECRETARY	
Submitted By:	Reviewed By:	Recommended By:	Recommended By: (See cover sheet for Signature)	Approved By: (See cover sheet for Signature/Approval)
DANILO C. TRAJANO	ADRIANO M. DOROY	GILBERTO S. REYES	MANUEL M. BONGAN	SIMEON A. DATUMANONG
Project Director	Chief, Bridges Division	Director IV (OIC)	Undersecretary	Secretary

PROJECT AND LOCATION :
THE DETAILED DESIGN STUDY ON UPGRADING INTER-URBAN HIGHWAY SYSTEM ALONG THE PAN-PHILIPPINE HIGHWAY (Plaridel, Cabanatuan and San Jose Bypasses)
CABANATUAN BYPASS - CONTRACT PACKAGE II

SCALE : 1: 200 FULL SIZE A1

SHEET CONTENTS :
BRIDGE NO. 3
GENERAL PLAN, ELEVATION AND SECTIONS (ULTIMATE STAGE)

SHEET NO. : B3-01

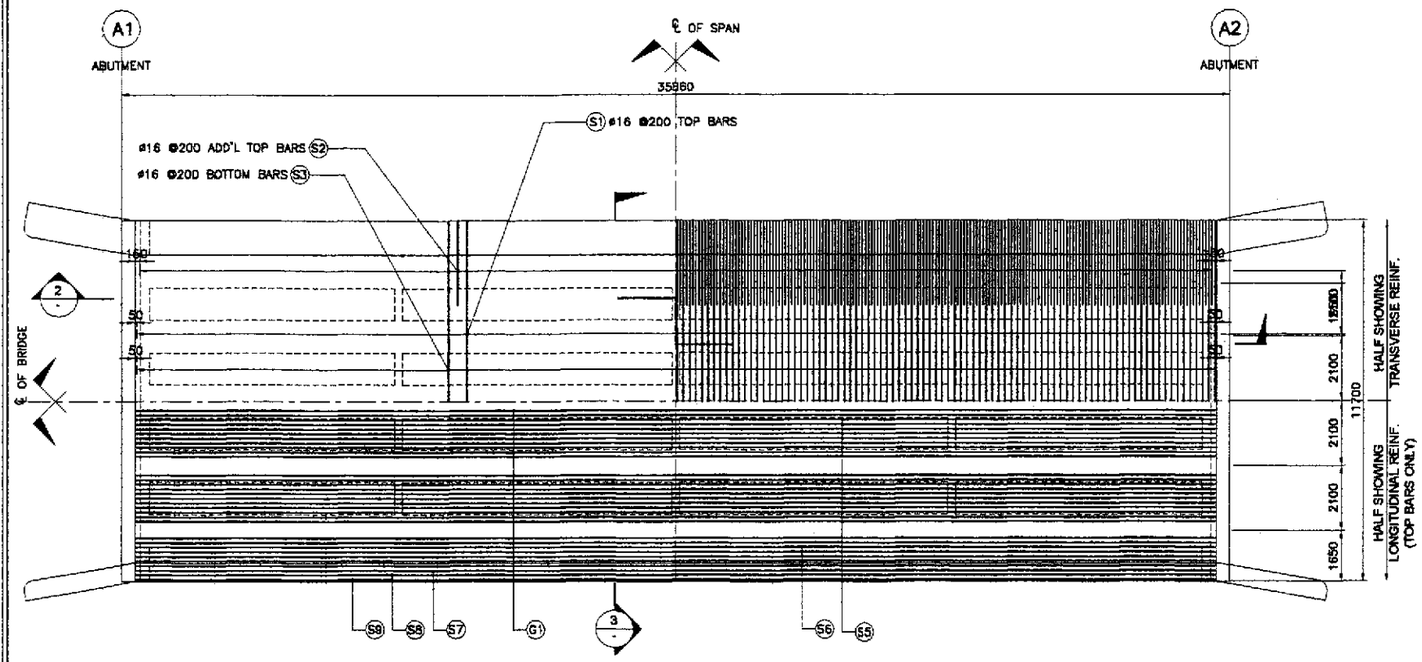

1 FRAMING PLAN
SCALE 1 : 100

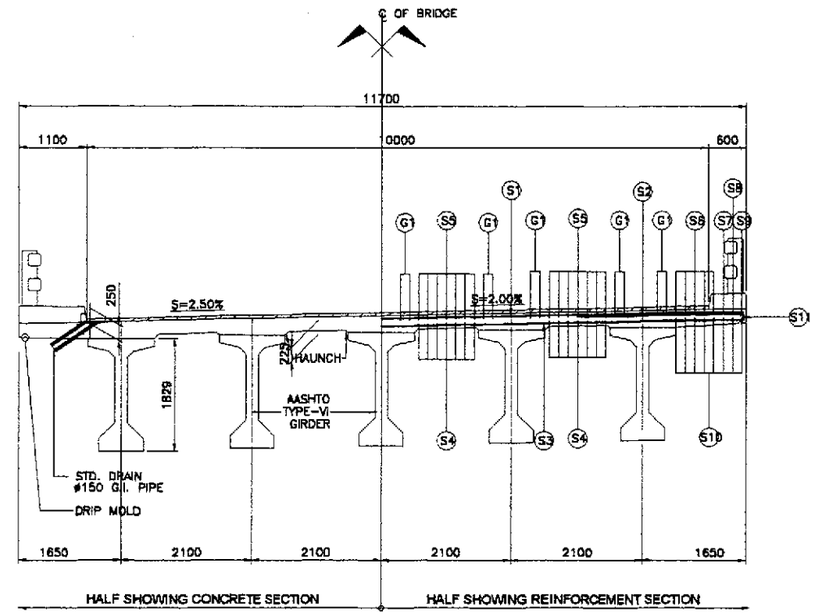

3 TYPICAL CROSS-SECTION
SCALE 1 : 50

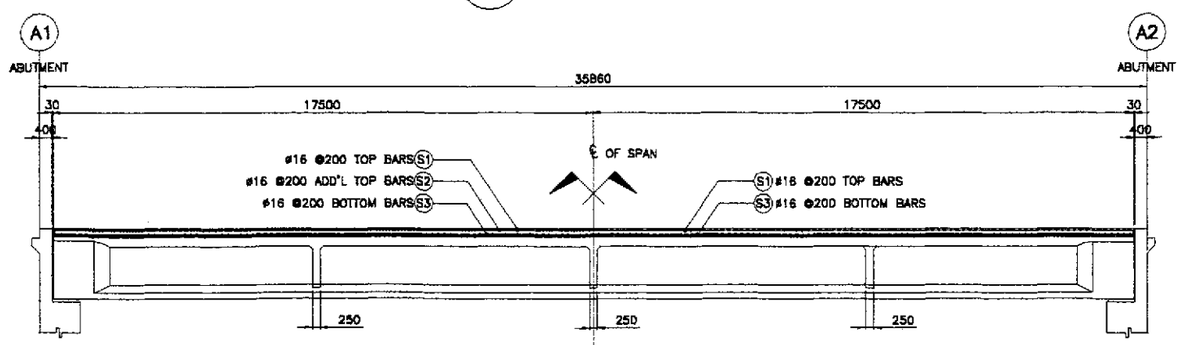

2 LONGITUDINAL SECTION
SCALE 1 : 100

ESTIMATED QUANTITIES OF SUPERSTRUCTURE

ITEM NO.	DESCRIPTION	UNIT	TOTAL
404(1)a	REINFORCING STEEL GRADE 40	kgs.	29222
	DECK SLAB	14503	
	DIAPHRAGM	442	
	GIRDER	9680	
	SIDEWALK, RAILING, & POST	3255	
	APPROACH SLAB	1342	
404(1)b	REINFORCING STEEL GRADE 60	kgs.	14855
	DECK SLAB	0	
	DIAPHRAGM	1546	
	GIRDER	8385	
	SIDEWALK, RAILING, & POST	708	
	APPROACH SLAB	4216	
405(1)	STRUCTURAL CONCRETE	cu. m.	308.52
	DECK SLAB	101.91	
	DIAPHRAGM	15.32	
	GIRDER	132.75	
	SIDEWALK, RAILING, & POST	23.18	
	APPROACH SLAB	35.36	

BAR BENDING DIAGRAM

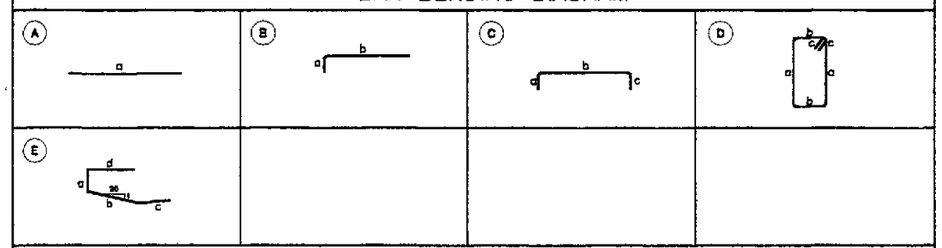

SCHEDULE OF REINFORCEMENT

LOCATION	CONCRETE VOLUME (m^3)	BAR MARK	BAR SIZE	QTY.	SPACING	BAR SHAPE	DIMENSIONS (mm) OUT TO OUT a	b	c	d	LENGTH EACH BAR (mm)	TOTAL LENGTH (m)	UNIT WT. (kg/m)	WEIGHT IN (kg)	REBAR RATIO (kg/m^3)
DECK SLAB	101.91	G1	16	20	AS SHOWN	A	34900	–	–	–	34900	698.00	1.579	1103	142.32
		S1	16	176	200	C	145	11600	145	–	11890	2092.64	1.579	3305	
		S2	16	352	200	B	145	2850	–	–	2795	983.84	1.579	1554	
		S3	16	176	200	C	145	11600	145	–	11890	2092.64	1.579	3305	
		S4	16	28	150	A	34900	–	–	–	34900	977.20	1.579	1543	
		S5	16	28	150	A	34900	–	–	–	34900	977.20	1.579	1543	
		S6	16	10	AS SHOWN	A	34900	–	–	–	34900	349.00	1.579	552	
		S7	16	2	AS SHOWN	A	34900	–	–	–	34900	69.80	1.579	111	
		S8	16	2	AS SHOWN	A	34900	–	–	–	34900	69.80	1.579	111	
		S9	16	2	AS SHOWN	A	34900	–	–	–	34900	69.80	1.579	111	
		S10	16	16	AS SHOWN	A	34900	–	–	–	34900	558.40	1.579	882	
		S11	12	176	400	E	145	1100	900	300	2445	430.32	0.888	383	
TOTAL	101.91											GRADE 40 = 14,503 kgs.			

JICA
JAPAN INTERNATIONAL COOPERATION AGENCY
KEI KATAHIRA & ENGINEERS INTERNATIONAL
YEO YACHIYO ENGINEERING CO., LTD.

	DATE	SIGNATURE
DESIGNED	10/09/02	E. N. SALLAN
CHECKED	10/16/02	
SUBMITTED	10/18/02	TEAM LEADER

REPUBLIC OF THE PHILIPPINES
DEPARTMENT OF PUBLIC WORKS AND HIGHWAYS

PJHL – PMO	BUREAU OF DESIGN		OFFICE OF THE SECRETARY	
Submitted By:	Reviewed By:	Recommended By:	Recommended By: (See cover sheet for Signature)	Approved By: (See cover sheet for Signature/Approval)
DANILO C. TRAJANO	ADRIANO M. DOROY	GILBERTO S. REYES	MANUEL M. BONOAN	SIMEON A. DATUMANONG
Project Director	Chief, Bridges Division	Director IV (OIC)	Undersecretary	Secretary

PROJECT AND LOCATION :
THE DETAILED DESIGN STUDY ON UPGRADING INTER-URBAN HIGHWAY SYSTEM ALONG THE PAN-PHILIPPINE HIGHWAY (Pleridel, Cabanatuan and San Jose Bypasses)
CABANATUAN BYPASS - CONTRACT PACKAGE II

SCALE :
AS SHOWN
FULL SIZE A1

SHEET CONTENTS :
BRIDGE NO. 3
DECK FRAMING PLAN AND SECTIONS (ULTIMATE STAGE)

SHEET NO. :
B3-02

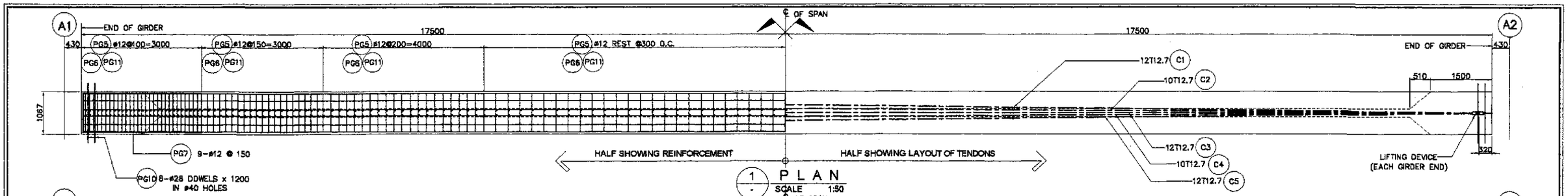

1 PLAN
SCALE 1:50

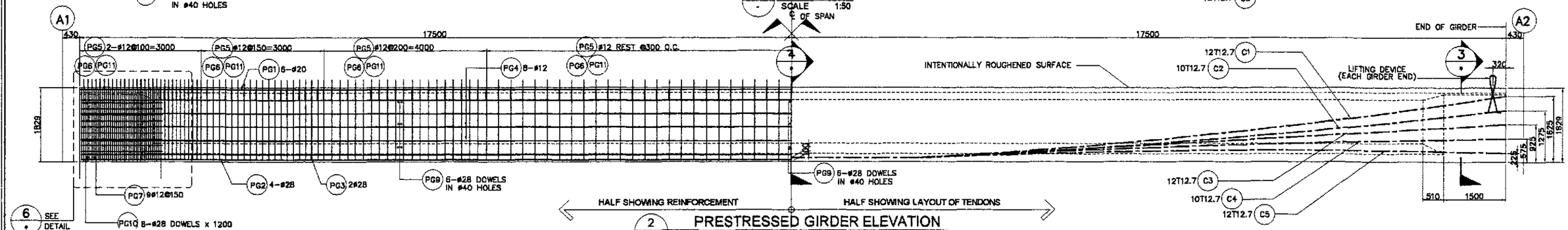

2 PRESTRESSED GIRDER ELEVATION
SCALE 1:50

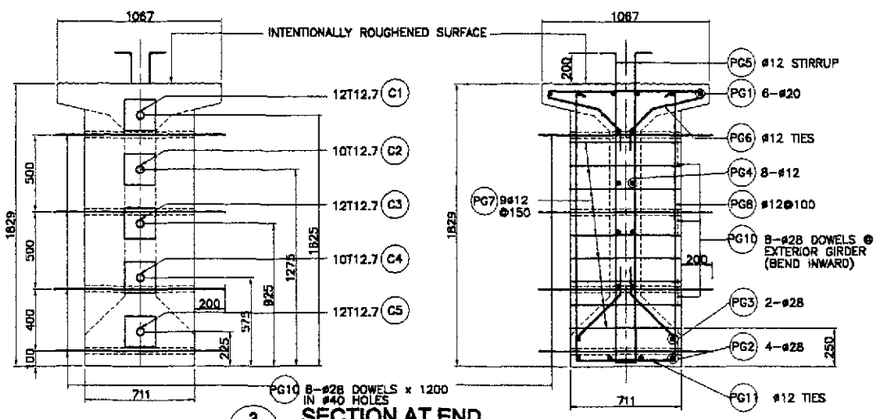

3 SECTION AT END
SCALE 1:20

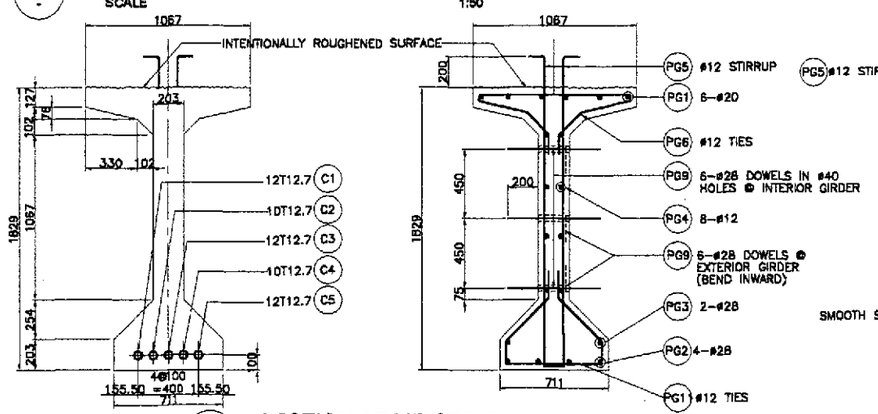

4 SECTION AT MIDSPAN
SCALE 1:20

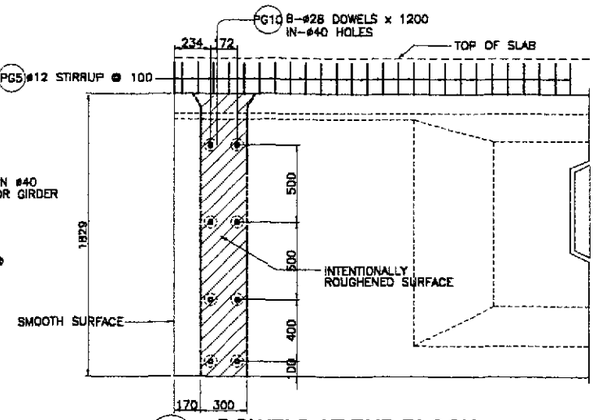

5 DOWELS AT END BLOCK
SCALE 1:20

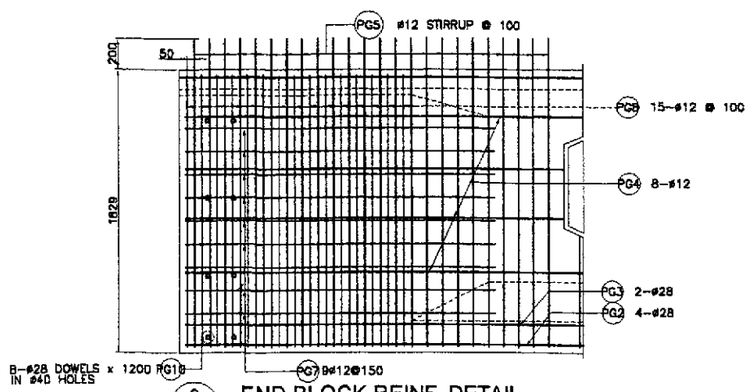

6 END BLOCK REINF. DETAIL
SCALE 120

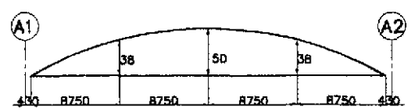

7 CAMBER DIAGRAM
NOT TO SCALE

NOTES :

1.) SEE GENERAL NOTES, -2, FOR GIRDER DESIGN GUIDE.
2.) JACKING FORCE PER GIRDER, P_J = 7,710 KN.
3.) JACKING WILL BE DONE AT BOTH ENDS.
4.) FINAL PRESTRESSING FORCE @ MIDSPAN, F_{MET} = 5,302 kN

BAR BENDING DIAGRAM

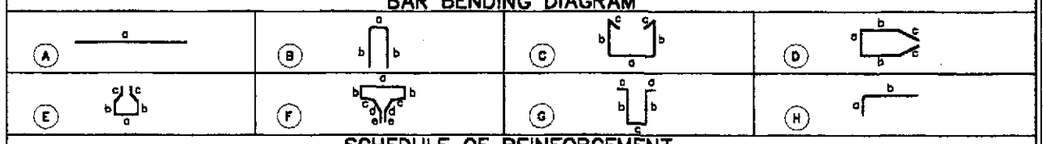

SCHEDULE OF REINFORCEMENT

STRUCTURE COMPONENT	BAR MARK	SIZE (mm)	QTY.	SPACING	BAR SHAPE	DIMENSION(mm) a	b	c	d	e	LENGTH PER BAR (mm)	TOTAL LENGTH (m)	UNIT WEIGHT (kg/m)	TOTAL WEIGHT (kg)	CONC. VOLUME (cu.m)	REBAR RATIO (kg/cu.m)	REMARKS
GIRDER	PG1	20	6	AS SHOWN	A	34920	–	–	–	–	34920	209.52	2.466	517	26.55	136.09	QUANTITIES ARE FOR ONE (1) GIRDER ONLY
	PG2	28	4	AS SHOWN	A	34920	–	–	–	–	34920	139.68	4.833	676			
	PG3	28	2	AS SHOWN	A	34920	–	–	–	–	34920	69.84	4.833	338			
	PG4	12	8	AS SHOWN	A	34920	–	–	–	–	34920	279.36	0.888	249			
	PG5	12	190	100	G	100	2000	103	–	–	4303	817.57	0.888	727			
	PG6	12	190	100	F	1000	50	340	200	150	2480	471.20	0.888	419			
	PG7	12	18	150	D	635	1450	550	–	–	4635	83.43	0.888	75			
	PG8	12	30	100	C	635	1750	150	–	–	4435	133.05	0.888	119			
	PG9	28	18	AS SHOWN	A	603	–	–	–	–	603	10.85	4.833	53			
	PG10	28	16	AS SHOWN	A	1200	–	–	–	–	1200	19.20	4.833	93			
	PG11	12	190	100	E	635	160	400	150	–	2055	390.45	0.888	347			

GRADE 40 TOTAL= 1,836 kgs.
GRADE 60 TOTAL= 1,677 kgs.

JICA
JAPAN INTERNATIONAL COOPERATION AGENCY
KEI KATAHIRA & ENGINEERS INTERNATIONAL
YEO YACHIYO ENGINEERING CO., LTD.

	DATE	SIGNATURE
DESIGNED	10/09/02	E. R. SALLAN
CHECKED	10/16/02	H. KOBAYASHI
SUBMITTED	10/18/02	TEAM LEADER

REPUBLIC OF THE PHILIPPINES
DEPARTMENT OF PUBLIC WORKS AND HIGHWAYS

PMHL – PMO	BUREAU OF DESIGN		OFFICE OF THE SECRETARY	
Submitted By:	Reviewed By:	Recommended By:	Recommended By: (See cover sheet for Signature)	Approved By: (See cover sheet for Signature/Approval)
DANILO C. TRAJANO, Project Director	ADRIANO M. DOROY, Chief, Bridges Division	GILBERTO S. REYES, Director IV (OIC)	MANUEL M. BONDAN, Undersecretary	SIMEON A. DATUMANONG, Secretary

PROJECT AND LOCATION :
THE DETAILED DESIGN STUDY ON UPGRADING INTER-URBAN HIGHWAY SYSTEM ALONG THE PAN-PHILIPPINE HIGHWAY (Plaridel, Cabanatuan and San Jose Bypasses)
CABANATUAN BYPASS - CONTRACT PACKAGE II

SCALE : AS SHOWN
FULL SIZE A1

SHEET CONTENTS :
BRIDGE NO. 3
AASHTO TYPE VI GIRDER
(ULTIMATE STAGE)

SHEET NO. : B3-03

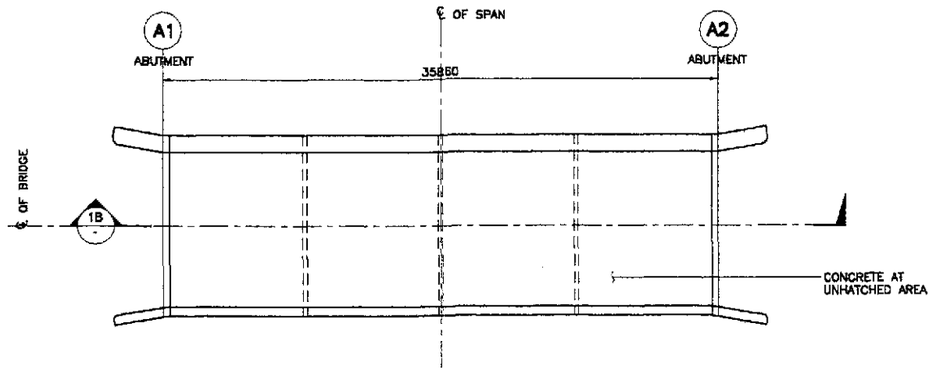

NOTES:

1. CONCRETE AT HATCHED AREAS SHALL BE PLACED AT LEAST TWENTY ONE (21) DAYS AHEAD OF CONCRETE AT UNHATCHED AREAS.
2. SEE GIRDER DETAIL FOR SPACING OF #28 DOWELS.

1A / - PLAN
SCALE 1:200

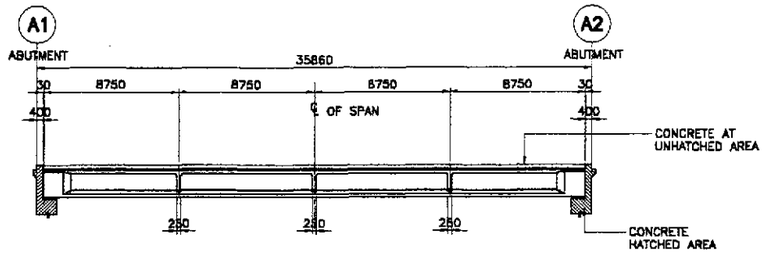

1B / - LONGITUDINAL SECTION
SCALE 1:200

1 / - CONCRETE POURING SEQUENCE
SCALE 1:200

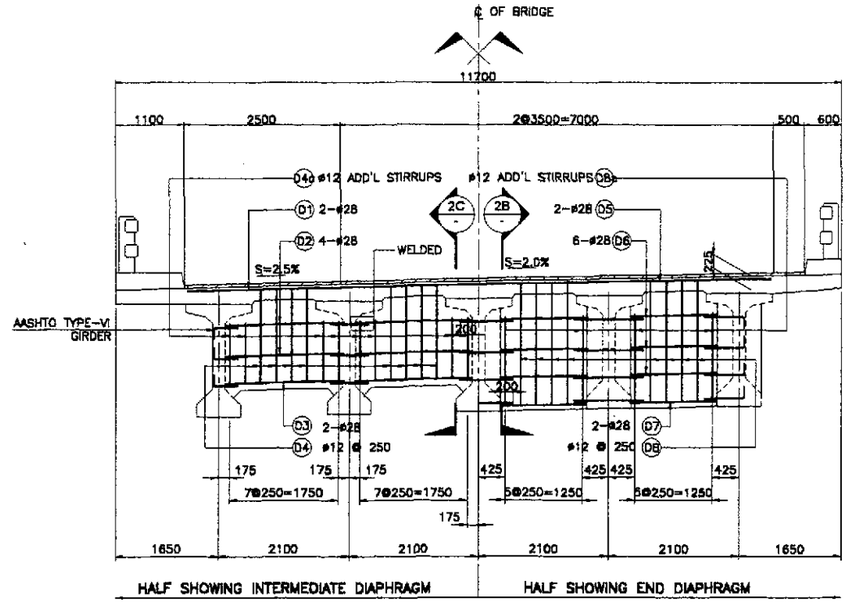

2A / - ELEVATION
SCALE 1:25

BAR BENDING DIAGRAM

(A)

(B)

SCHEDULE OF REINFORCEMENT

STRUCTURE COMPONENT	LOCATION	CONCRETE VOLUME (m^3)	BAR MARK	BAR SIZE	QTY.	SPACING	BAR SHAPE	DIMENSIONS (mm) OUT TO OUT a	b	c	d	LENGTH PER BAR (mm)	TOTAL LENGTH (m)	UNIT WT. (kg/m)	TOTAL WEIGHT IN (kg)	REBAR RATIO (kg/m^3)
DIAPHRAGM	INTERMEDIATE DIAPHRAGM	9.06	D1	28	6	AS SHOWN	A	9400				9400	56.40	4.833	273	131.79
			D2	28	48	AS SHOWN	A	1895				1895	90.96	4.833	440	
			D3	28	24	AS SHOWN	A	1895				1895	45.48	4.833	220	
			D4	12	48	250	B	150	1500	150		3600	172.80	0.888	154	
			D4a	12	48	AS SHOWN	B	150	950	150		2500	120.00	0.888	107	
	END DIAPHRAGM	6.26	D5	28	4	AS SHOWN	A	9400				9400	37.60	4.833	182	126.84
			D6	28	48	AS SHOWN	A	1390				1390	66.72	4.833	323	
			D7	28	16	AS SHOWN	A	1390				1390	22.24	4.833	108	
			D8	12	32	250	B	200	1950	150		4600	147.20	0.888	131	
			D8a	12	16	AS SHOWN	B	200	1400	150		3500	56.00	0.888	50	
TOTAL		15.32										GRADE 60 TOTAL = 1,546 kgs.				
												GRADE 40 TOTAL = 442 kgs.				

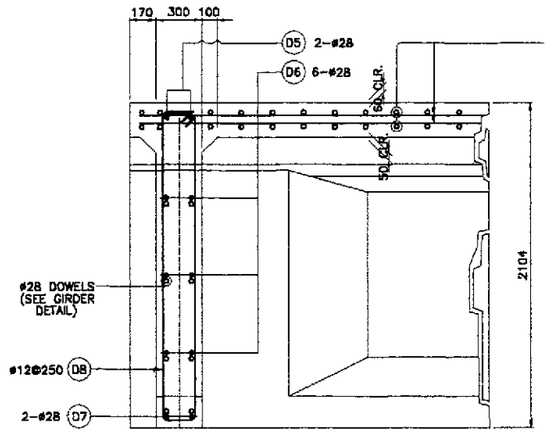

2B / - SECTION
SCALE 1:20

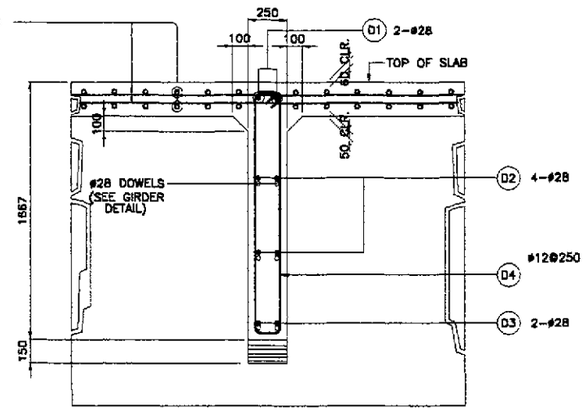

2C / - SECTION
SCALE 1:20

2 / - DETAIL OF END & INTERMEDIATE DIAPHRAGM
SCALE AS SHOWN

JICA
JAPAN INTERNATIONAL COOPERATION AGENCY
KEI KATAHIRA & ENGINEERS INTERNATIONAL
YEC YACHIYO ENGINEERING CO., LTD.

	DATE	SIGNATURE
DESIGNED	10/09/02	E. N. SALLAN
CHECKED	10/16/02	M. KOBAYASHI
SUBMITTED	10/18/02	N. KUCHI TEAM LEADER

REPUBLIC OF THE PHILIPPINES
DEPARTMENT OF PUBLIC WORKS AND HIGHWAYS

PUHL – PWD	BUREAU OF DESIGN		OFFICE OF THE SECRETARY	
Submitted By:	Reviewed By:	Recommended By:	Recommended By: (See cover sheet for Signature)	Approved By: (See cover sheet for Signature/Approval)
DANILO C. TRAJANO	ADRIANO M. DORCY	GILBERTO S. REYES	MANUEL M. BONOAN	SIMEON A. DATUMANONG
Project Director	Chief, Bridges Division	Director IV (OIC)	Undersecretary	Secretary

PROJECT AND LOCATION :	SCALE :	SHEET CONTENTS :	SHEET NO. :
THE DETAILED DESIGN STUDY ON UPGRADING INTER-URBAN HIGHWAY SYSTEM ALONG THE PAN-PHILIPPINE HIGHWAY (Plaridel, Cabanatuan and San Jose Bypasses)	AS SHOWN	BRIDGE NO. 3 CONCRETE POURING SEQUENCE AND DIAPHRAGM DETAILS (ULTIMATE STAGE)	B3-04
CABANATUAN BYPASS - CONTRACT PACKAGE II	FULL SIZE A1		

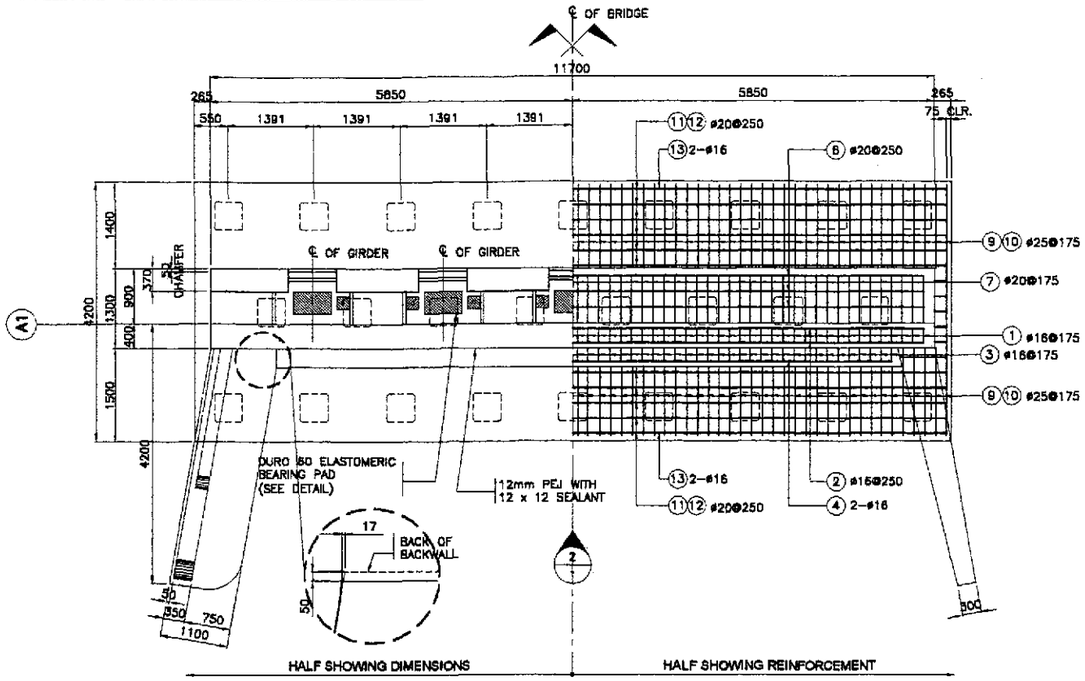

1 PLAN
SCALE 1:50

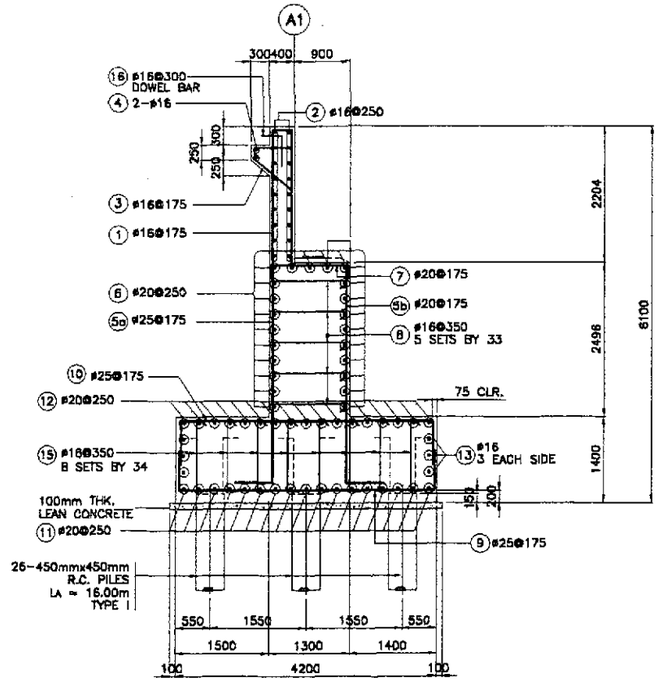

3 SECTION
SCALE 1:50

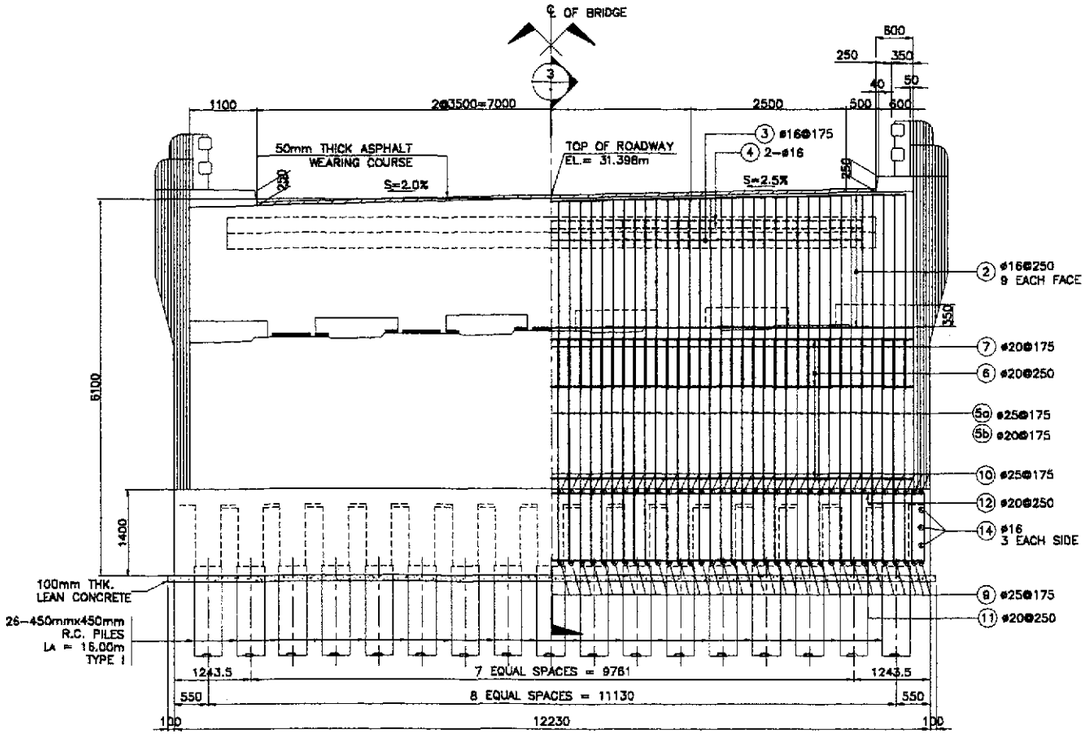

2 ELEVATION
SCALE 1:50

BAR BENDING DIAGRAM

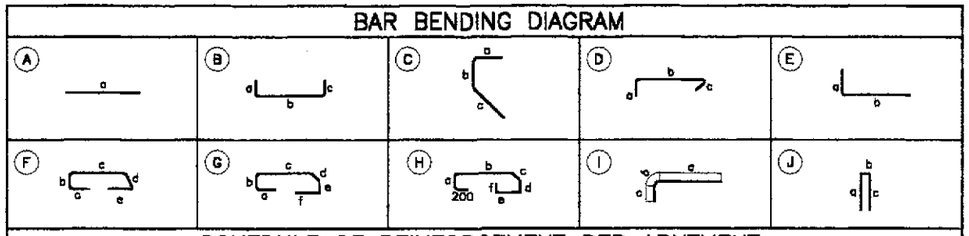

SCHEDULE OF REINFORCEMENT PER ABUTMENT

LOCATION	CONCRETE VOLUME (m^3)	BAR MARK	BAR SIZE	QTY.	SPACING	BAR SHAPE	DIMENSIONS (mm) OUT TO OUT a	b	c	d	e	f	LENGTH EA. BAR (mm)	TOTAL LENGTH (m)	UNIT WT. (kg/m)	WEIGHT (kg)	REBAR RATIO (kg/m^3)
BACKWALL	11.44	①	16	67	175	B	2800	300	2600	–	–	–	5500	368.50	1.579	582	94.58
		②	16	18	250	A	11600	–	–	–	–	–	11600	208.80	1.579	330	
		③	16	58	175	C	600	150	750	–	–	–	1500	87.00	1.579	138	
		④	16	2	AS SHOWN	A	9900	–	–	–	–	–	9900	19.80	1.579	32	
MAINWALL	37.96	⑤a	25	67	175	E	400	3650	–	–	–	–	4050	271.35	3.854	1046	81.60
		⑤b	20	67	175	E	400	3650	–	–	–	–	4050	271.35	2.466	670	
		⑥	20	23	250	A	11600	–	–	–	–	–	11600	266.80	2.466	658	
		⑦	20	67	175	B	250	1200	250	–	–	–	1700	113.90	2.466	281	
		⑧	16	165	350	D	250	1200	250	–	–	–	1700	280.50	1.579	443	
FOOTING	71.91	⑨	25	70	175	B	700	4050	700	–	–	–	5450	381.50	3.854	1471	69.26
		⑩	25	70	175	B	700	4050	700	–	–	–	5450	381.50	3.854	1471	
		⑪	20	17	250	B	700	12100	700	–	–	–	13500	229.50	2.466	566	
		⑫	20	17	250	B	700	12100	700	–	–	–	13500	229.50	2.466	566	
		⑬	16	6	AS SHOWN	A	12100	–	–	–	–	–	12100	72.60	1.579	115	
		⑭	16	6	AS SHOWN	A	4050	–	–	–	–	–	4050	24.30	1.579	39	
		⑮	16	272	350	D	250	1250	250				1750	476.00	1.579	752	
DOWEL		⑯	16	34	300	E	650	500	–	–	–	–	1150	39.10	1.579	62	
TOTAL	121.31														GRADE 40 TOTAL = 2,493 kgs. GRADE 60 TOTAL = 6,729 kgs.		

JICA
JAPAN INTERNATIONAL COOPERATION AGENCY
KEI KATAHIRA & ENGINEERS INTERNATIONAL
YEC YACHIYO ENGINEERING CO., LTD.

	DATE	SIGNATURE
DESIGNED	10/09/02	A.P. GONZALES
CHECKED	10/16/02	M. NAGAYASHI
SUBMITTED	10/18/02	M. BUCHI TEAM LEADER

REPUBLIC OF THE PHILIPPINES
DEPARTMENT OF PUBLIC WORKS AND HIGHWAYS

PJHL – PMO	BUREAU OF DESIGN		OFFICE OF THE SECRETARY	
Submitted By:	Reviewed By:	Recommended By:	Recommended By: (See cover sheet for Signature)	Approved By: (See cover sheet for Signature/Approval)
DANILO C. TRAJANO Project Director	ADRIANO M. DOROY Chief, Bridges Division	GILBERTO S. REYES Director IV (OIC)	MANUEL M. BONOAN Undersecretary	SIMEON A. DATUMANONG Secretary

PROJECT AND LOCATION :
THE DETAILED DESIGN STUDY ON UPGRADING INTER-URBAN HIGHWAY SYSTEM ALONG THE PAN-PHILIPPINE HIGHWAY (Plaridel, Cabanatuan and San Jose Bypasses)
CABANATUAN BYPASS - CONTRACT PACKAGE II

SCALE : 1 : 50 FULL SIZE A1

SHEET CONTENTS :
BRIDGE NO. 3
ABUTMENT A1
MAINWALL REINFORCEMENT DETAILS
(ULTIMATE STAGE)

SHEET NO. : B3-05

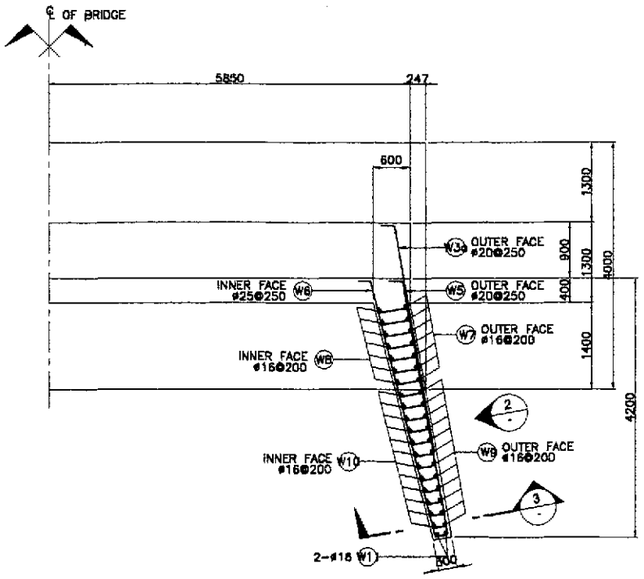

1 PLAN
SCALE 1:50

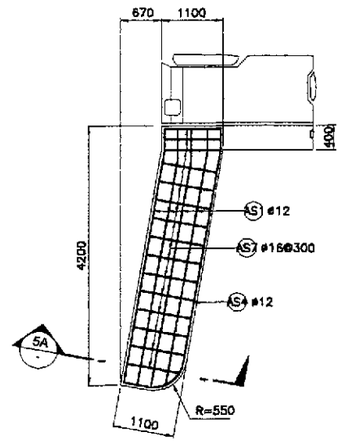

LEFT SIDE

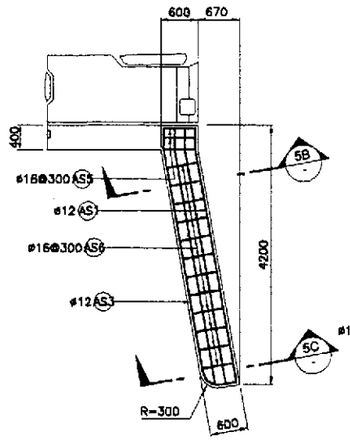

RIGHT SIDE

4 SIDEWALK DETAIL
SCALE 1:50

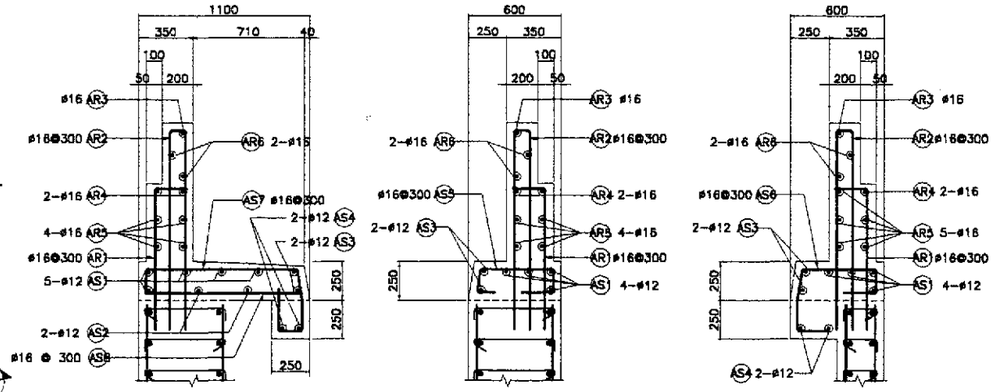

5A SECTION
SCALE 1:20

5B SECTION
SCALE 1:20

5C SECTION
SCALE 1:20

5 APPROACH RAIL DETAILS
SCALE 1:20

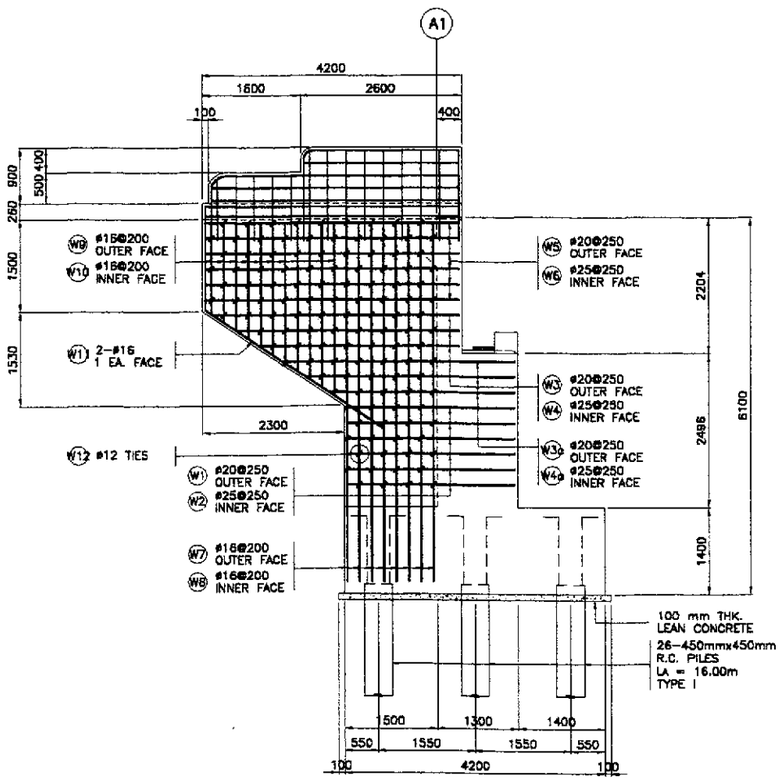

2 WINGWALL ELEVATION
SCALE 1:50

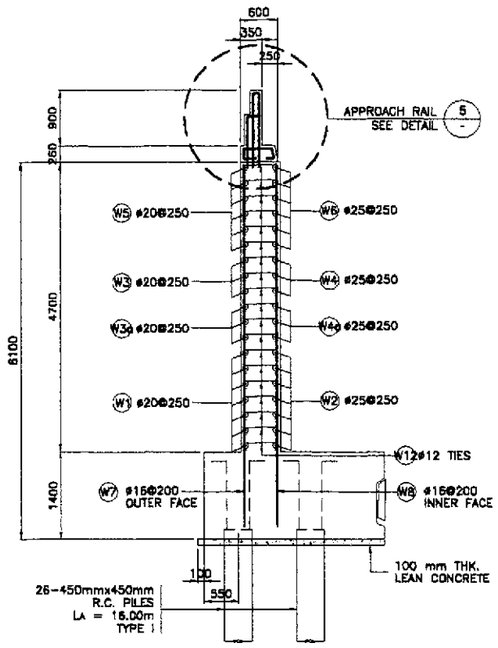

3 SECTION
SCALE 1:50

BAR BENDING DIAGRAM

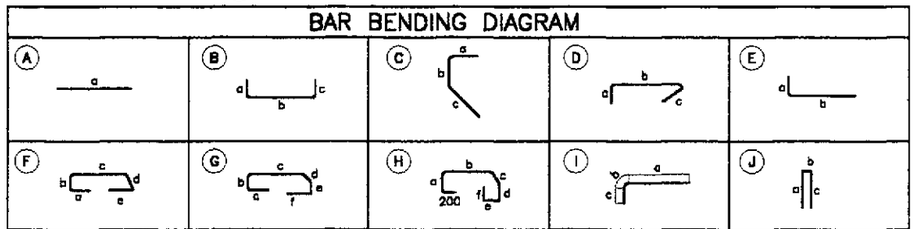

SCHEDULE OF REINFORCEMENT PER ABUTMENT

LOCATION	CONCRETE VOLUME (m³)	BAR MARK	BAR SIZE	QTY.	SPACING	BAR SHAPE	DIMENSIONS (mm) OUT TO OUT a	b	c	d	e	f	LENGTH EA. BAR (mm)	TOTAL LENGTH (m)	UNIT WT. (kg/m)	WEIGHT (kg)	REBAR RATIO (kg/m³)
WINGWALL	11.03	W1	20	12	250	B	400	2700	150	–	–	–	3250	39.00	2.466	97	144.56
		W2	25	12	250	B	400	2700	150	–	–	–	3250	39.00	3.854	151	
		W3	20	6	250	B	400	3600	150	–	–	–	4150	24.90	2.466	62	
		W3a	20	6	250	B	400	3400	150	–	–	–	3950	23.70	2.466	59	
		W4	25	6	250	B	400	3600	150	–	–	–	4150	24.90	3.854	96	
		W4a	25	6	250	B	400	3400	150	–	–	–	3950	23.70	3.854	92	
		W5	20	12	250	B	400	4100	150	–	–	–	4650	55.80	2.466	138	
		W6	25	12	250	B	400	4100	150	–	–	–	4650	55.80	3.854	216	
		W7	16	16	200	E	250	5850	–	–	–	–	6100	97.60	1.579	155	
		W8	16	16	200	E	250	5850	–	–	–	–	6100	97.60	1.579	155	
		W9	16	22	200	E	250	2150	–	–	–	–	2400	52.80	1.579	84	
		W10	16	22	200	E	250	2150	–	–	–	–	2400	52.80	1.579	84	
		W11	16	4	AS SHOWN	C	250	1500	3500	–	–	–	5250	21.00	1.579	34	
		W12	12	244	AS SHOWN	D	170	450	170	–	–	–	790	192.76	0.888	172	
														GRADE 60 TOTAL = 911 kgs. GRADE 40 TOTAL = 684 kgs.			
APPROACH RAILING AND SIDEWALK	4.12	AS1	12	9	AS SHOWN	A	4100	–	–	–	–	–	4100	36.90	0.888	33	95.48
		AS2	12	2	AS SHOWN	A	4100	–	–	–	–	–	4100	8.20	0.888	8	
		AS3	12	4	AS SHOWN	A	4100	–	–	–	–	–	4100	16.40	0.888	15	
		AS4	12	4	AS SHOWN	A	4100	–	–	–	–	–	4100	16.40	0.888	15	
		AS5	16	3	300	F	200	170	480	200	200	–	1250	3.75	1.579	6	
		AS6	16	12	300	G	200	170	480	200	170	200	1420	17.04	1.579	27	
		AS7	16	15	300	H	200	170	980	200	170	200	2120	31.80	1.579	51	
		AS8	16	15	300	E	200	1020	–	–	–	–	1220	18.30	1.579	29	
		AR	16	10	300	E	200	900	–	–	–	–	1100	11.00	1.579	18	
		AR2	16	18	300	J	1300	120	1300	–	–	–	2720	48.96	1.579	78	
		AR3	16	2	AS SHOWN	I	2500	236	1300	–	–	–	4036	8.07	1.579	13	
		AR4	16	4	AS SHOWN	I	4000	236	900	–	–	–	5136	20.54	1.579	33	
		AR5	16	8	AS SHOWN	A	4000	–	–	–	–	–	4000	32.00	1.579	51	
		AR6	16	4	AS SHOWN	A	2500	–	–	–	–	–	2500	10.00	1.579	16	
														GRADE 40 TOTAL= 393 kgs.			
TOTAL	15.15													GRADE 60 TOTAL = 911 kgs. GRADE 40 TOTAL = 1,077 kgs.			

JICA
JAPAN INTERNATIONAL COOPERATION AGENCY
KEI KATAHIRA & ENGINEERS INTERNATIONAL
YCO YACHIYO ENGINEERING CO., LTD.

	DATE	SIGNATURE
DESIGNED	10/09/02	A. P. GONZALES
CHECKED	10/18/02	K. KOBAYASHI
SUBMITTED	10/18/02	M. MORIOKA TEAM LEADER

REPUBLIC OF THE PHILIPPINES
DEPARTMENT OF PUBLIC WORKS AND HIGHWAYS

FJHL – PMO	BUREAU OF DESIGN		OFFICE OF THE SECRETARY	
Submitted By:	Reviewed By:	Recommended By:	Recommended By: (See cover sheet for Signature)	Approved By: (See cover sheet for Signature/Approval)
DANILO C. TRAJANO Project Director	ADRIANO M. DOROY Chief, Bridges Division	GILBERTO S. REYES Director IV (OIC)	MANUEL M. BONDAN Undersecretary	SIMEON A. DATUMANONG Secretary

PROJECT AND LOCATION :
THE DETAILED DESIGN STUDY ON UPGRADING INTER-URBAN HIGHWAY SYSTEM ALONG THE PAN-PHILIPPINE HIGHWAY (Plaridel, Cabanatuan and San Jose Bypasses)
CABANATUAN BYPASS - CONTRACT PACKAGE II

SCALE :
AS SHOWN
FULL SIZE A1

SHEET CONTENTS :
BRIDGE NO. 3
ABUTMENT A1
WINGWALL REINFORCEMENT DETAILS
(ULTIMATE STAGE)

SHEET NO. :
B3-06

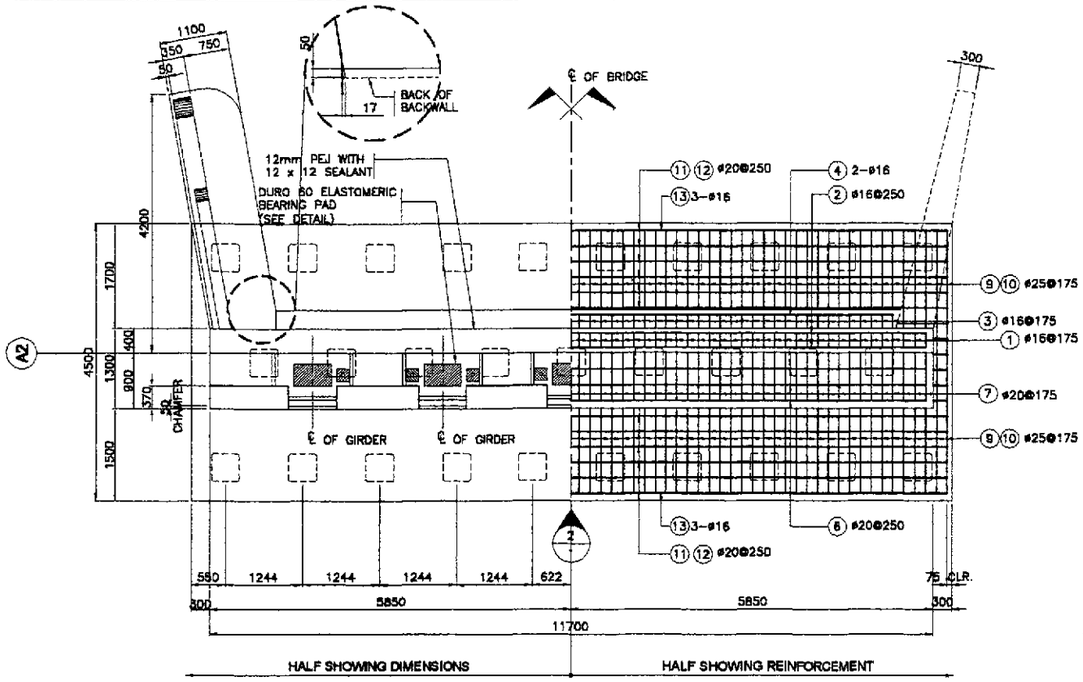

1 - PLAN
SCALE 1:50

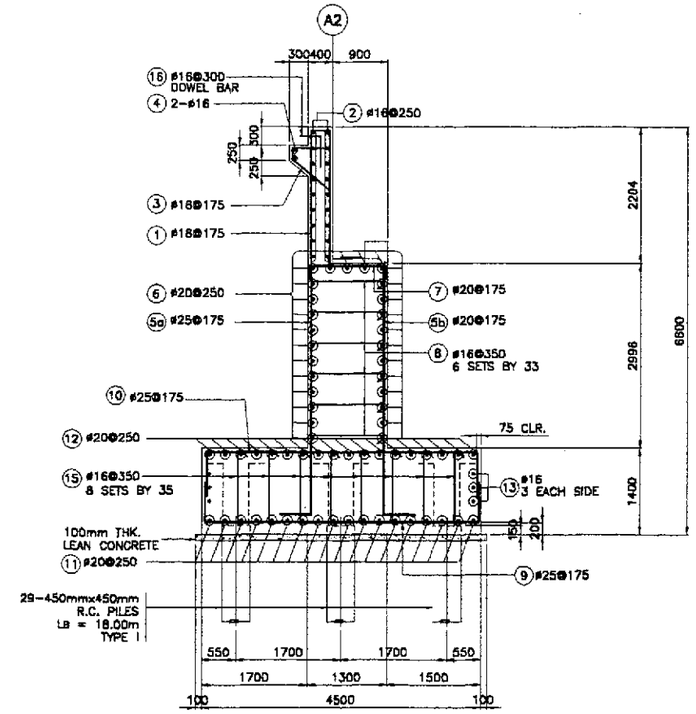

3 - SECTION
SCALE 1:50

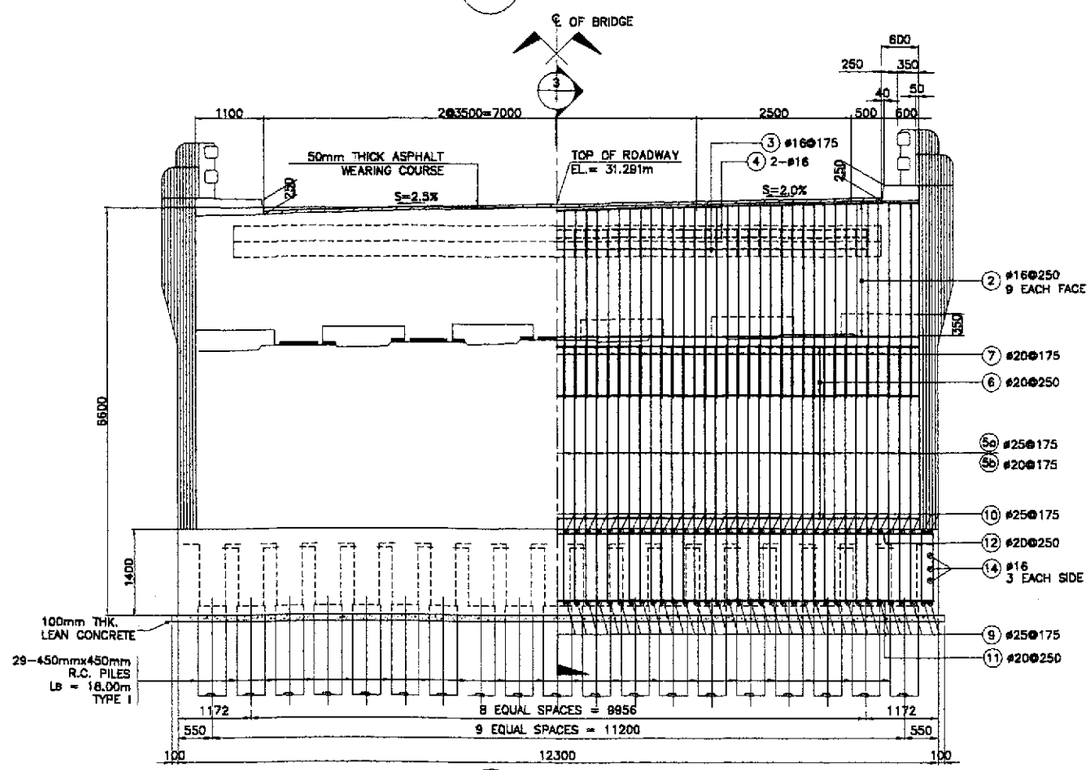

2 - ELEVATION
SCALE 1:50

BAR BENDING DIAGRAM

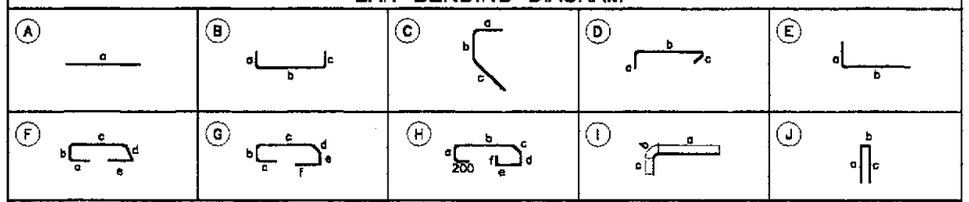

SCHEDULE OF REINFORCEMENT PER ABUTMENT

LOCATION	CONCRETE VOLUME (m^3)	BAR MARK	BAR SIZE	QTY.	SPACING	BAR SHAPE	DIMENSIONS (mm) OUT TO OUT a	b	c	d	e	f	LENGTH EA. BAR (mm)	TOTAL LENGTH (m)	UNIT WT. (kg/m)	WEIGHT (kg)	REBAR RATIO (kg/m^3)
BACKWALL	11.44	①	16	67	175	B	2600	300	2600	–	–	–	5500	368.50	1.579	582	94.58
		②	16	18	250	A	11600	–	–	–	–	–	11600	208.80	1.579	330	
		③	16	58	175	C	600	150	750	–	–	–	1500	87.00	1.579	138	
		④	16	2	AS SHOWN	A	9900	–	–	–	–	–	9900	19.80	1.579	32	
MAINWALL	45.57	⑤a	25	67	175	E	400	4150	–	–	–	–	4550	304.85	3.854	1175	77.09
		⑤b	20	67	175	E	400	4150	–	–	–	–	4550	304.85	2.466	752	
		⑥	20	27	250	A	11600	–	–	–	–	–	11600	313.20	2.466	773	
		⑦	20	67	175	B	250	1200	250	–	–	–	1700	113.90	2.466	281	
		⑧	16	198	350	D	250	1200	250	–	–	–	1700	336.60	1.579	532	
FOOTING	77.49	⑨	25	70	175	B	700	4350	700	–	–	–	5750	402.50	3.854	1552	67.62
		⑩	25	70	175	B	700	4350	700	–	–	–	5750	402.50	3.854	1552	
		⑪	20	18	250	B	700	12150	700	–	–	–	13550	243.90	2.466	602	
		⑫	20	18	250	B	700	12150	700	–	–	–	13550	243.90	2.466	602	
		⑬	16	6	AS SHOWN	A	12150	–	–	–	–	–	12150	72.90	1.579	116	
		⑭	16	6	AS SHOWN	A	4350	–	–	–	–	–	4350	26.10	1.579	42	
		⑮	16	280	350	D	250	1250	250				1750	490.00	1.579	774	
DOWEL		⑯	16	34	300	E	650	500	–	–	–	–	1150	39.10	1.579	62	
TOTAL	134.50															GRADE 40 TOTAL = 2,608 kgs. GRADE 60 TOTAL = 7,289 kgs.	

JICA
JAPAN INTERNATIONAL COOPERATION AGENCY
KEI KATAHIRA & ENGINEERS INTERNATIONAL
YCO YACHIYO ENGINEERING CO., LTD.

	DATE	SIGNATURE
DESIGNED	10/09/02	
CHECKED	10/14/02	
SUBMITTED	10/18/02	TEAM LEADER

REPUBLIC OF THE PHILIPPINES
DEPARTMENT OF PUBLIC WORKS AND HIGHWAYS

PJHL – PMO	BUREAU OF DESIGN		OFFICE OF THE SECRETARY	
Submitted By:	Reviewed By:	Recommended By:	Recommended By: (See cover sheet for Signature)	Approved By: (See cover sheet for Signature/Approval)
DANILO C. TRAJANO Project Director	ADRIANO M. DOROY Chief, Bridges Division	GILBERTO S. REYES Director IV (OIC)	MANUEL M. BONDAN Undersecretary	SIMEON A. DATUMANONG Secretary

PROJECT AND LOCATION :
THE DETAILED DESIGN STUDY ON UPGRADING INTER-URBAN HIGHWAY SYSTEM ALONG THE PAN-PHILIPPINE HIGHWAY (Plaridel, Cabanatuan and San Jose Bypasses)
CABANATUAN BYPASS - CONTRACT PACKAGE II

SCALE : 1 : 50
FULL SIZE A1

SHEET CONTENTS :
BRIDGE NO 3
ABUTMENT A2
MAINWALL REINFORCEMENT DETAILS
(ULTIMATE STAGE)

SHEET NO. : B3-07

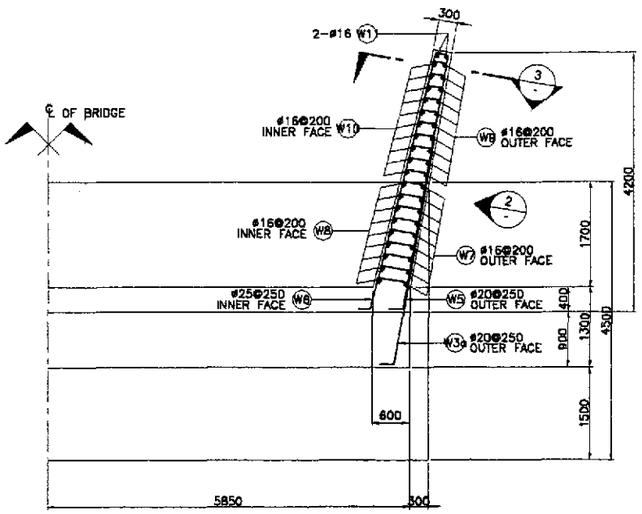

1 PLAN
SCALE 1:50

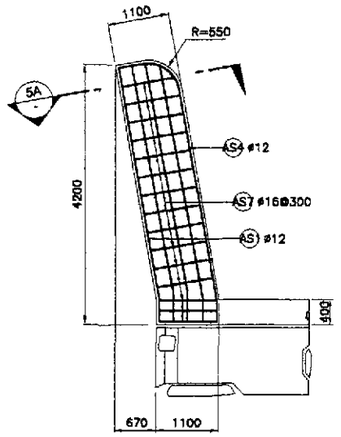

LEFT SIDE

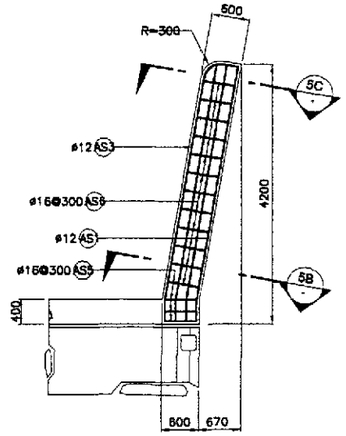

RIGHT SIDE

4 SIDEWALK DETAIL
SCALE 1:50

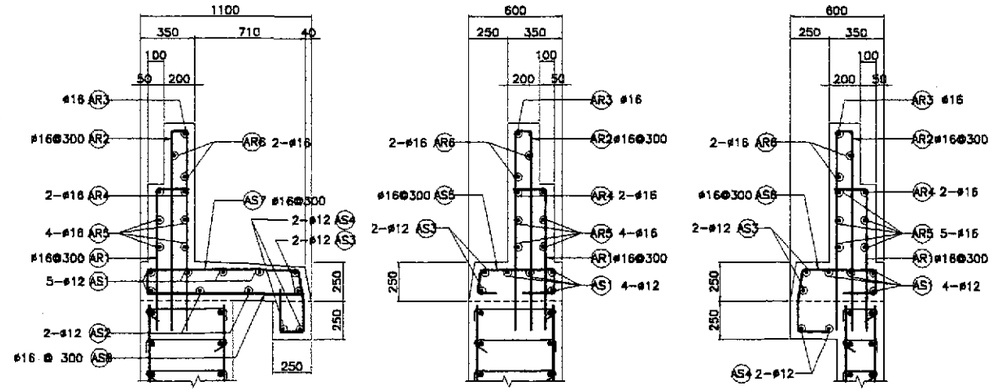

5A SECTION
SCALE 1:20

5B SECTION
SCALE 1:20

5C SECTION
SCALE 1:20

5 APPROACH RAIL DETAILS
SCALE 1:20

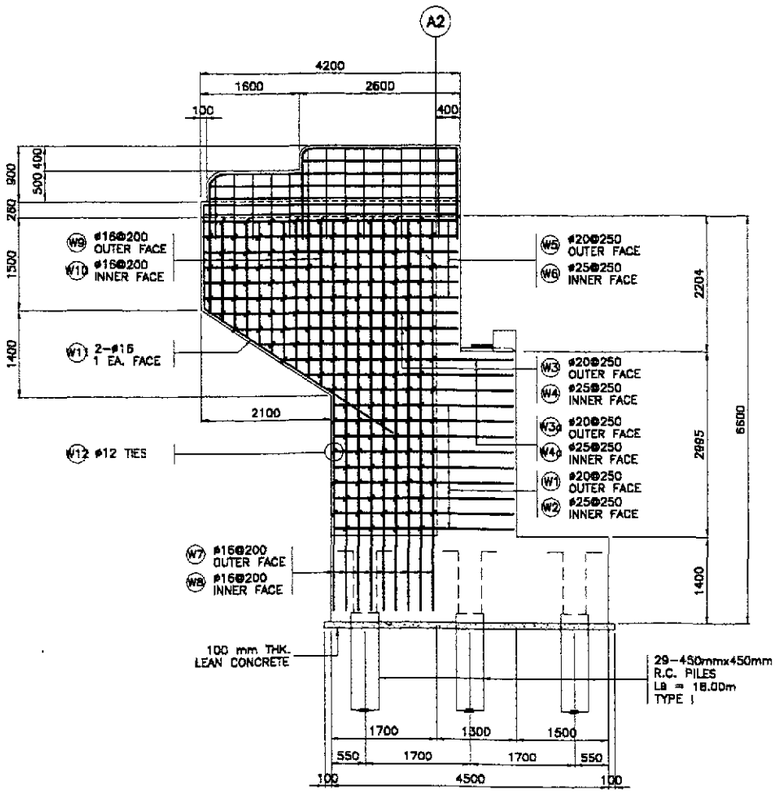

2 WINGWALL ELEVATION
SCALE 1:50

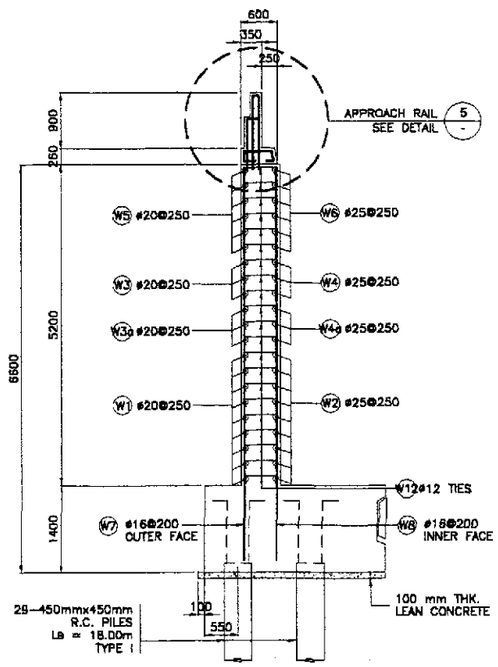

3 SECTION
SCALE 1:50

BAR BENDING DIAGRAM

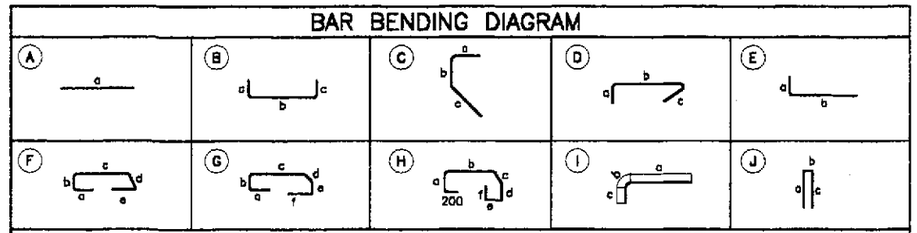

SCHEDULE OF REINFORCEMENT PER ABUTMENT

LOCATION	CONCRETE VOLUME (m^3)	BAR MARK	BAR SIZE	QTY.	SPACING	BAR SHAPE	DIMENSIONS (mm) OUT TO OUT a	b	c	d	e	f	LENGTH EA. BAR (mm)	TOTAL LENGTH (m)	UNIT WT. (kg/m)	WEIGHT (kg)	REBAR RATIO (kg/m^3)
WINGWALL	12.11	W1	20	18	250	B	400	2900	150	–	–	–	3450	62.10	2.466	154	148.08
		W2	25	18	250	B	400	2900	150	–	–	–	3450	62.10	3.854	240	
		W3	20	6	250	B	400	3575	150	–	–	–	4125	24.75	2.466	62	
		W3a	20	6	250	B	400	3350	150	–	–	–	3900	23.40	2.466	58	
		W4	25	6	250	B	400	3575	150	–	–	–	4125	24.75	3.854	96	
		W4a	25	6	250	B	400	3350	150	–	–	–	3900	23.40	3.854	91	
		W5	20	12	250	B	400	4100	150	–	–	–	4650	55.80	2.466	138	
		W6	25	12	250	B	400	4100	150	–	–	–	4650	55.80	3.854	215	
		W7	16	18	200	E	250	6350	–	–	–	–	6600	118.80	1.579	188	
		W8	16	18	200	E	250	6350	–	–	–	–	6600	118.80	1.579	188	
		W9	16	20	200	E	250	2100	–	–	–	–	2350	47.00	1.579	75	
		W10	16	20	200	E	250	2100	–	–	–	–	2350	47.00	1.579	75	
		W11	16	4	AS SHOWN	C	250	1500	3500	–	–	–	5250	21.00	1.579	34	
		W12	12	272	AS SHOWN	D	170	450	170	–	–	–	790	214.88	0.888	191	
														GRADE 60 TOTAL= 1,055 kgs.			
														GRADE 40 TOTAL = 751 kgs.			
APPROACH RAILING AND SIDEWALK	4.12	AS1	12	9	AS SHOWN	A	4100	–	–	–	–	–	4100	36.90	0.888	33	85.48
		AS2	12	2	AS SHOWN	A	4100	–	–	–	–	–	4100	8.20	0.888	8	
		AS3	12	4	AS SHOWN	A	4100	–	–	–	–	–	4100	16.40	0.888	15	
		AS4	12	4	AS SHOWN	A	4100	–	–	–	–	–	4100	16.40	0.888	15	
		AS5	16	3	300	F	200	170	480	200	200	–	1250	3.75	1.579	6	
		AS6	16	12	300	G	200	170	480	200	170	200	1420	17.04	1.579	27	
		AS7	16	15	300	H	200	170	980	200	170	200	2120	31.80	1.579	51	
		AS8	16	15	300	E	200	1020	–	–	–	–	1220	18.30	1.579	29	
		AR1	16	10	300	E	200	900	–	–	–	–	1100	11.00	1.579	18	
		AR2	16	18	300	J	1300	120	1300	–	–	–	2720	48.96	1.579	78	
		AR3	16	2	AS SHOWN	I	2500	236	1300	–	–	–	4036	8.07	1.579	13	
		AR4	16	4	AS SHOWN	I	4000	236	900	–	–	–	5136	20.54	1.579	33	
		AR5	16	8	AS SHOWN	A	4000	–	–	–	–	–	4000	32.00	1.579	51	
		AR6	16	4	AS SHOWN	A	2500	–	–	–	–	–	2500	10.00	1.579	16	
														GRADE 40 TOTAL= 393 kgs.			
TOTAL	16.23															GRADE 60 TOTAL = 1,055 kgs. GRADE 40 TOTAL = 1,144 kgs.	

JICA
JAPAN INTERNATIONAL COOPERATION AGENCY
KEI KATAHIRA & ENGINEERS INTERNATIONAL
YEO YACHIYO ENGINEERING CO., LTD.

	DATE	SIGNATURE
DESIGNED	10/09/02	A. P. GONZALES
CHECKED	10/10/02	N. KOBAYASHI
SUBMITTED	10/18/02	M. KOSAKA TEAM LEADER

REPUBLIC OF THE PHILIPPINES
DEPARTMENT OF PUBLIC WORKS AND HIGHWAYS

PJHL – PMO	BUREAU OF DESIGN		OFFICE OF THE SECRETARY	
Submitted By:	Reviewed By:	Recommended By:	Recommended By: (See cover sheet for Signature)	Approved By: (See cover sheet for Signature/Approval)
DANILO C. TRAJANO Project Director	ADRIANO M. DOROY Chief, Bridges Division	GILBERTO S. REYES Director IV (OIC)	MANUEL M. BONDAN Undersecretary	SIMEON A. DATUMANONG Secretary

PROJECT AND LOCATION :
THE DETAILED DESIGN STUDY ON UPGRADING INTER-URBAN HIGHWAY SYSTEM ALONG THE PAN-PHILIPPINE HIGHWAY (Plaridel, Cabanatuan and San Jose Bypasses)
CABANATUAN BYPASS - CONTRACT PACKAGE II

SCALE :
AS SHOWN
FULL SIZE A1

SHEET CONTENTS :
BRIDGE NO. 3
ABUTMENT A2
WINGWALL REINFORCEMENT DETAILS
(ULTIMATE STAGE)

SHEET NO. :
B3-08

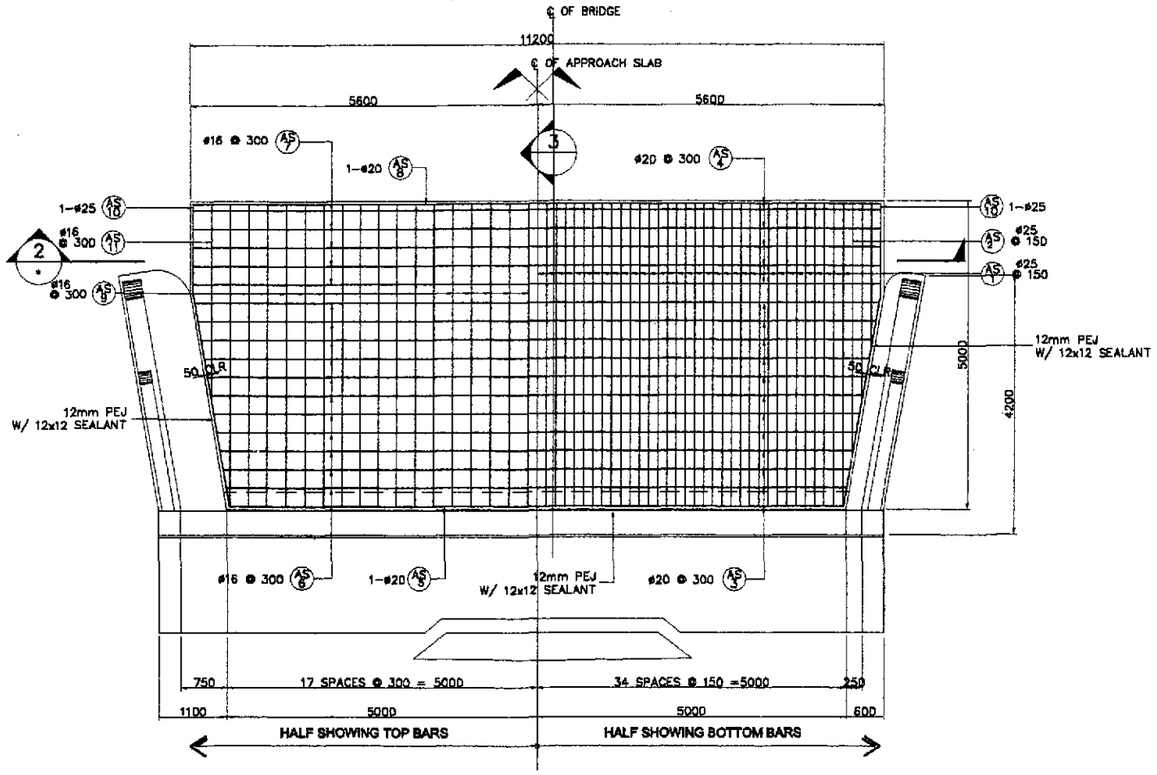

1 PLAN
SCALE 1:50

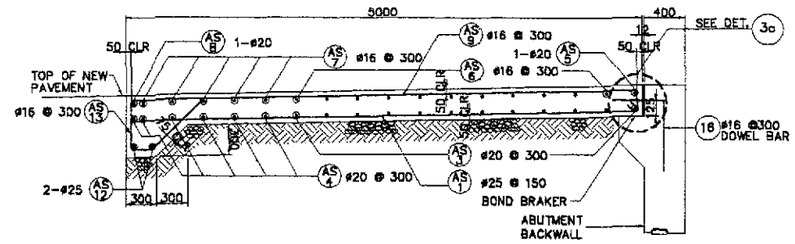

3 SECTION
SCALE 1:30

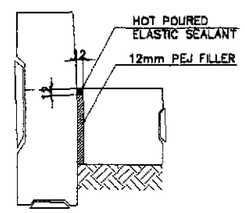

2a DETAIL
SCALE 1:10

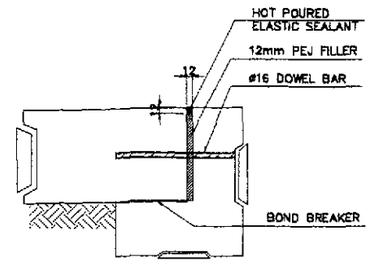

3a DETAIL
SCALE 1:10

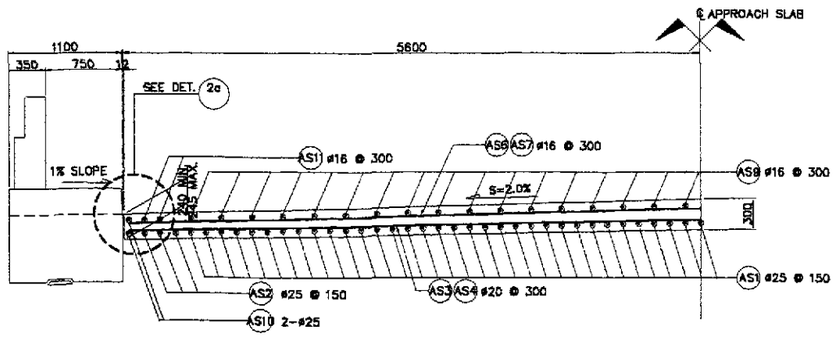

2 SECTION
SCALE 1:30

BAR BENDING DIAGRAM

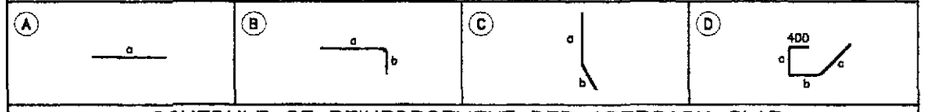

SCHEDULE OF REINFORCEMENT PER APPROACH SLAB

LOCATION	CONCRETE VOLUME (m³)	BAR MARK	BAR SIZE	QTY.	SPACING	BAR SHAPE	DIMENSIONS (mm) OUT TO OUT a	b	c	d	e	f	LENGTH EA. BAR (mm)	TOTAL LENGTH (m)	UNIT WEIGHT (kg/m)	WEIGHT (kg)	REBAR RATIO (kg/cu.m)
APPROACH SLAB	17.68	AS1	25	68	150	B	4900	200	–	–	–	–	5100	346.80	3.854	1337	157.17
		AS2	25	6	150	B	3200	200	–	–	–	–	3400	20.40	3.854	79	
		AS3	20	12	300	A	10500	–	–	–	–	–	10500	126.00	2.466	311	
		AS4	20	6	300	A	11100	–	–	–	–	–	11100	66.60	2.466	165	
		AS5	20	1	AS SHOWN	A	9900	–	–	–	–	–	9900	9.90	2.466	25	
		AS6	16	11	300	A	10550	–	–	–	–	–	10550	116.05	1.579	184	
		AS7	16	5	300	A	11100	–	–	–	–	–	11100	55.50	1.579	88	
		AS8	20	1	AS SHOWN	A	11100	–	–	–	–	–	11100	11.10	2.466	28	
		AS9	16	34	300	B	4800	200	–	–	–	–	5100	173.40	1.579	274	
		AS10	25	4	AS SHOWN	C	1450	3500	–	–	–	–	4950	19.80	3.854	77	
		AS11	16	4	300	B	2300	200	–	–	–	–	2500	10.00	1.579	16	
		AS12	25	2	AS SHOWN	A	11100	–	–	–	–	–	11100	22.20	3.854	86	
		AS13	16	38	300	D	400	500	200	700	–	–	1800	68.40	1.579	109	
TOTAL	17.68															GRADE 40 TOTAL = 671 kgs. GRADE 60 TOTAL = 2,108 kgs.	

JICA
JAPAN INTERNATIONAL COOPERATION AGENCY

KEI KATAHIRA & ENGINEERS INTERNATIONAL
YEO YACHIYO ENGINEERING CO., LTD.

	DATE	SIGNATURE
DESIGNED	10/09/02	A. P. GONZALES
CHECKED	10/16/02	[illegible]
SUBMITTED	10/18/02	[illegible] TEAM LEADER

REPUBLIC OF THE PHILIPPINES
DEPARTMENT OF PUBLIC WORKS AND HIGHWAYS

PUHL – PMO	BUREAU OF DESIGN		OFFICE OF THE SECRETARY	
Submitted By:	Reviewed By:	Recommended By:	Recommended By: (See cover sheet for Signature)	Approved By: (See cover sheet for Signature/Approval)
DANILO C. TRAJANO	ADRIANO M. DOROY	GILBERTO S. REYES	MANUEL M. BONCAN	SIMEON A. DATUMANONG
Project Director	Chief, Bridges Division	Director IV (OIC)	Undersecretary	Secretary

PROJECT AND LOCATION :
THE DETAILED DESIGN STUDY ON UPGRADING INTER-URBAN HIGHWAY SYSTEM ALONG THE PAN-PHILIPPINE HIGHWAY (Plaridel, Cabanatuan and San Jose Bypasses)
CABANATUAN BYPASS - CONTRACT PACKAGE II

SCALE :
AS SHOWN
FULL SIZE A1

SHEET CONTENTS :
BRIDGE NO. 3
APPROACH SLAB PLAN, SECTIONS AND DETAIL
(ULTIMATE STAGE)

SHEET NO. :
B3-09

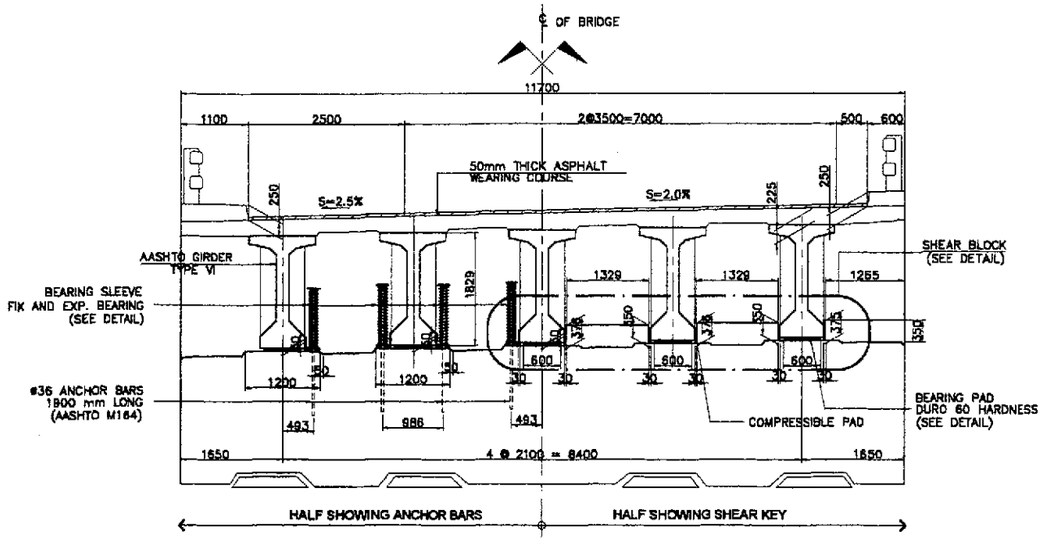

1 SECTION AT ABUTMENT SEAT
SCALE 1:50

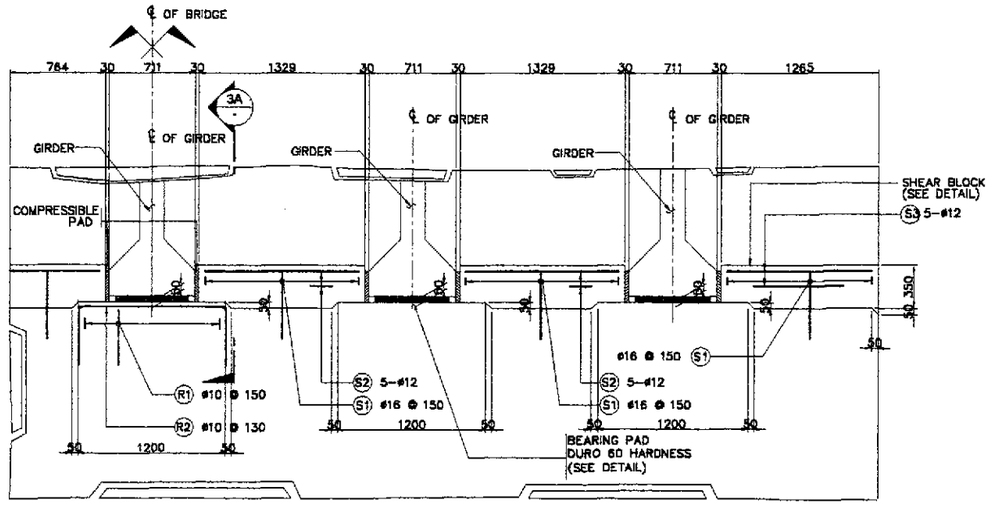

3 SHEAR BLOCK DETAIL
SCALE 1:25

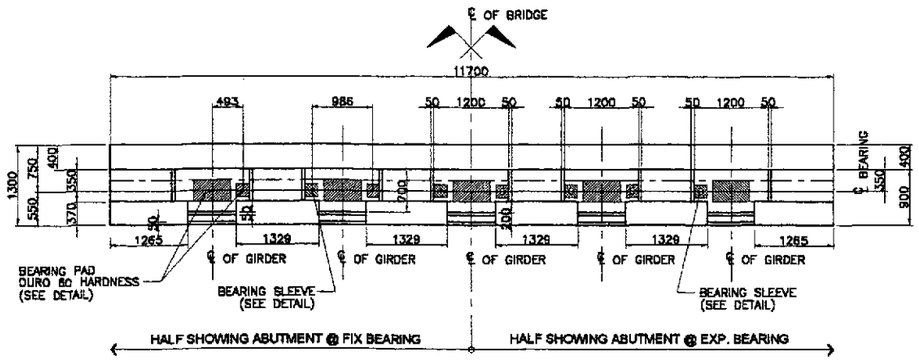

2 PLAN AT ABUTMENT SEAT
SCALE 1:50

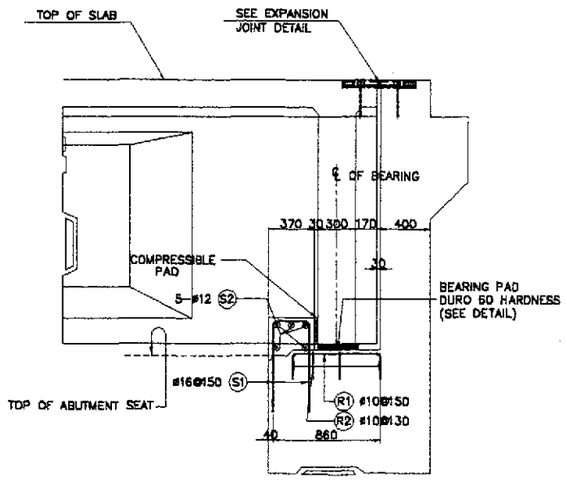

3A SECTION
SCALE 1:25

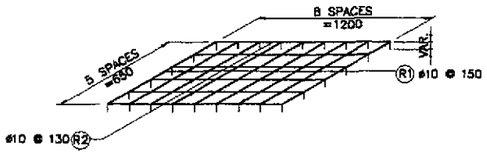

4 RISER REINFORCEMENT
NOT TO SCALE

BAR BENDING DIAGRAM

SCHEDULE OF REINFORCEMENT

LOCATION	CONCRETE VOLUME (m^3)	BAR MARK	BAR SIZE	QTY.	SPACING	BAR SHAPE	DIMENSION(mm) CUT TO OUT a	b	c	d	e	LENGTH EACH BAR (m)	TOTAL LENGTH (m)	UNIT WEIGHT (kg/m)	WEIGHT (kg)	REBAR RATIO (kg/m^3)
SHEAR KEY & RISER	1.50	S1	16	58	150	B	560	280	560			1410	81.78	1.579	130	142.34
		S2	12	20	AS SHOWN	A	1250					1250	25.00	0.888	23	
		S3	12	10	AS SHOWN	A	1185					1185	11.85	0.888	11	
		R1	10	45	150	B	500	650	500			1650	74.25	0.616	46	
		R2	10	30	130	B	500	1200	500			2200	66.00	0.616	41	
TOTAL	1.50	GRADE 40 TOTAL = 251 Kgs.														

THE REINFORCEMENT SHOWN ON THIS TABLE IS FOR REFERENCE ONLY. THE CONTRACTOR SHOULD CHECK AND VERIFY ALL DIMENSIONS, SIZES AND QUANTITIES OF REINFORCEMENT.

JICA
JAPAN INTERNATIONAL COOPERATION AGENCY
KATAHIRA & ENGINEERS INTERNATIONAL
YACHIYO ENGINEERING CO., LTD.

	DATE	SIGNATURE
DESIGNED	10/09/02	E. AY. SALLAN
CHECKED	10/16/02	
SUBMITTED	10/18/02	M. KUCHI TEAM LEADER

REPUBLIC OF THE PHILIPPINES
DEPARTMENT OF PUBLIC WORKS AND HIGHWAYS

PJHL – PMO	BUREAU OF DESIGN		OFFICE OF THE SECRETARY	
Submitted By:	Reviewed By:	Recommended By:	Recommended By: (See cover sheet for Signature)	Approved By: (See cover sheet for Signature/Approval)
DANILO C. TRAJANO	ADRIANO M. DOROY	GILBERTO S. REYES	MANUEL M. BONOAN	SIMEON A. DATUMANONG
Project Director	Chief, Bridges Division	Director IV (OIC)	Undersecretary	Secretary

PROJECT AND LOCATION :
THE DETAILED DESIGN STUDY ON UPGRADING INTER-URBAN HIGHWAY SYSTEM ALONG THE PAN-PHILIPPINE HIGHWAY (Plaridel, Cabanatuan and San Jose Bypasses)
CABANATUAN BYPASS - CONTRACT PACKAGE II

SCALE : AS SHOWN
FULL SIZE A1

SHEET CONTENTS :
BRIDGE NO. 3
SHEAR KEY AND RISER DETAILS AT ABUTMENT (ULTIMATE STAGE)

SHEET NO. : B3-10

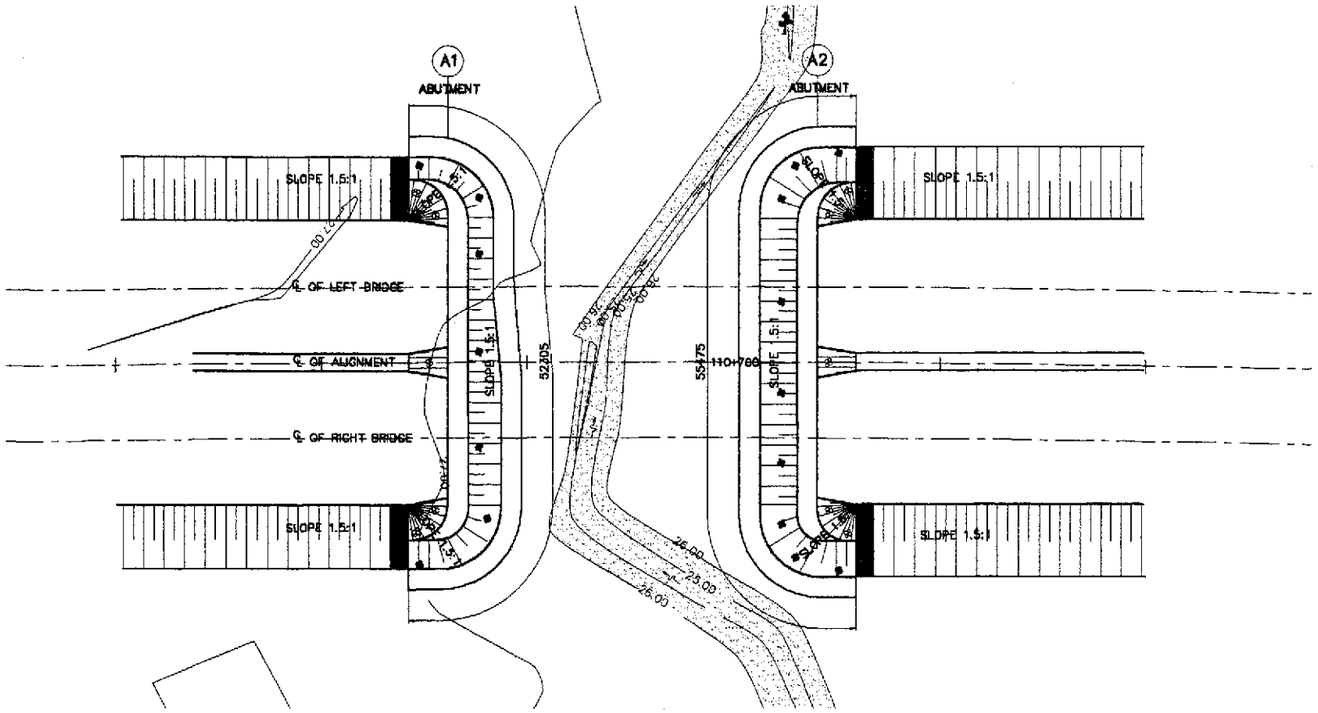

1A PLAN
SCALE 1:300

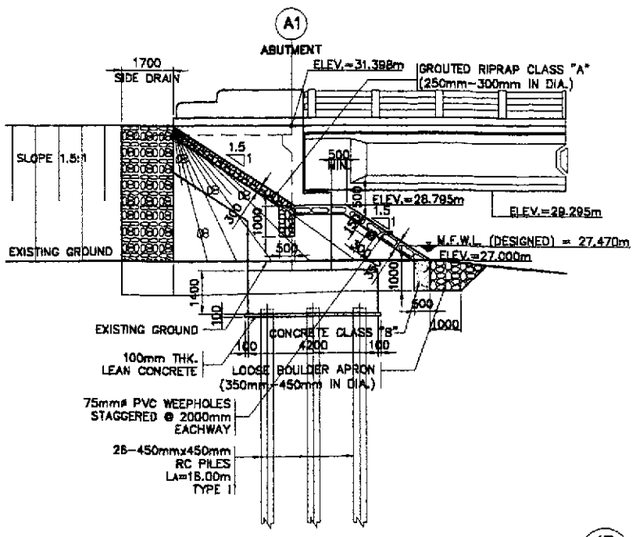

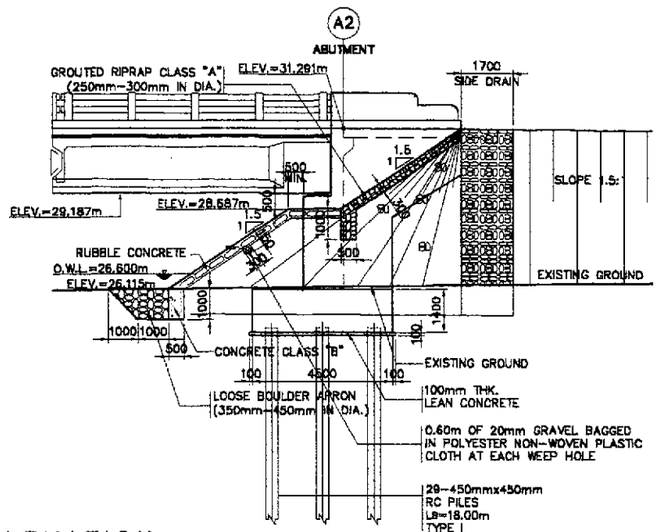

1B ELEVATION
SCALE 1:100

1 ABUTMENT SLOPE PROTECTION
SCALE AS SHOWN

GENERAL NOTES:

1. GROUTED RIPRAP (250mm-300mmDIA.) SHALL BE USED FOR THE FACING AND SHALL BE CAREFULLY HANDLAID WITH THE LONGEST DIMENSIONS PERPENDICULAR TO THE SLOPE AND FIRMLY BEDDED INTO THE SLOPE AND ADJACENT TO THE ADJOINING BOULDERS SPACED BETWEEN THE BOULDERS. THE SPACE BETWEEN THE BOULDERS SHALL BE COMPLETELY FILLED WITH MORTAR. THE OUTSIDE SURFACE OF THE BOULDERS SHALL BE LEFT EXPOSED AND THE SURFACE OF THE MORTAR SHALL BE SWEPT WITH A STIFF BROOM.
2. GEOTEXTILE
   THE FOLLOWING SPECIFICATIONS ARE REQUIRED:
   1. POLYESTER OR POLYPROPELINE – 100%
   2. MECHANICALLY BONDED/HEAT BONDED
   3. NON-WOVEN
   4. EFFECTIVE OPENING SIZE – 110 MICRONS (MAX.)
   5. THICKNESS UNDER PRESSURE – 0.80mm (MIN.)
   6. WEIGHT – 200g/sq. m. (MIN.)
   7. CBR PUNCTURE STRENGTH – 400N (MIN.)
   8. MULTI-DIRECTIONAL TENSILE STRENGTH – 13KN/m
3. GRAVEL FILTER SHALL BE COARSE AGGREGATES MATERIALS WHICH SATISFY THE REQUIREMENTS FOR ITEM 405, STRUCTURAL CONCRETE, GRADING B OF TABLE 405.1 AS REVISED.
4. HAND-LAID ROCK SHALL BE MORE THAN 0.015cu.m. IN VOLUME AND SHALL CONSISTS OF HARD AND DURABLE STONES. ALL SHALL BE LAID FLAT AND SECURELY PLACED WITH LARGER STONES GENERALLY LOCATED IN THE LOWER PART OF THE STRUCTURE.
5. RUBBLE CONCRETE SHALL BE CLASS "B" (1:2.5:5) MIX CONCRETE WITH BOULDERS EMBEDDED THEREIN. BOULDERS 250-300mmø SHALL BE CAREFULLY HAND-LAID WITHIN THE CONCRETE SECTION. THE BOULDERS SHALL BE THOROUGHLY INCORPORATED INTO THE CONCRETE MASS WITH A COVER OF 30mm AND NOT LESS THAN 30mm APART. THE RUBBLE CONCRETE SHALL BE COMPOSED OF 40 % CLASS "B" CONCRETE AND 60 % BOULDERS.
6. FOR THE LOOSE BOULDER APRON, BOULDERS 350-450mmø SHALL BE HAND-LAID, CLOSE TOGETHER AND SHALL BE FIRMLY BEDDED. ALL VOIDS BETWEEN BOULDERS SHALL BEFILLED WITH GRAVEL AND THE JOINTS FILLED WITH TIGHTLY DRIVEN SPALLS.
7. CURTAIN WALLS SHALL BE USED AT BOTH ENDS OF THE LOOSE BOULDER APRON BANK PROTECTION WORKS. BOULDERS SHALL BE CAREFULLY HAND-LAID AND EMBEDDED INTO THE CONCRETE SECTION.
8. NO CONCRETING UNDER WATER SHALL BE PERMITTED.
9. PROVIDE 1.0 m. BERM WHEN HEIGHT (H) IS > 4.0 m.

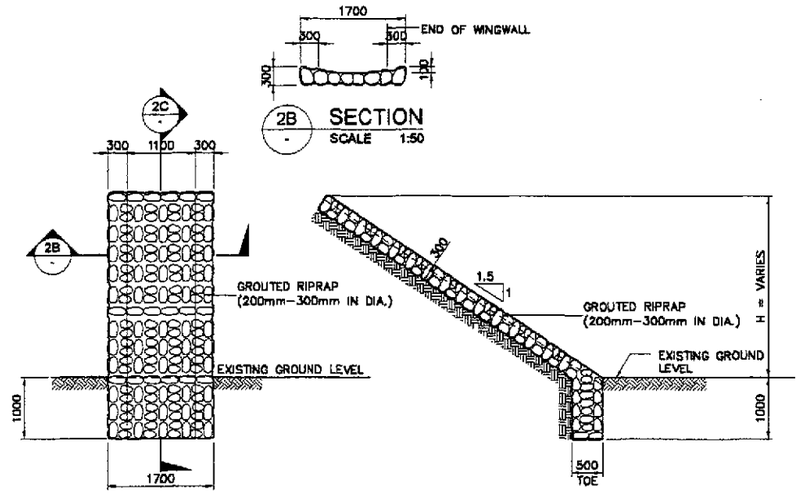

2A ELEVATION
SCALE 1:50

2C SECTION
SCALE 1:50

2 TYPICAL SIDE DRAIN DETAIL
SCALE AS SHOWN

VELOCITY (m/sec)	ROCK SIZE (mm)	
	VERY TURBULENT FLOW	SMOOTH FLOW
1.00	40	–
1.50	135	–
2.00	170	–
2.50	255	137
3.00	370	197
3.50	515	270
4.00	690	350
4.50	825	425
5.00	>900	590

PER ABUTMENT

LOCATION	SIZES	QUANTITY	
		ABUT. A1	ABUT. A2
CONC. CLASS "B"	1000 x 500 x LENGTH	13.16 cu. m.	13.87 cu. m.
BOULDER APRON	350mm-450mm IN DIA.	39.49 cu. m.	41.61 cu. m.
RUBBLE CONCRETE	250mm-300mm IN DIA.	32.72 cu. m.	42.27 cu. m.
SIDE DRAIN	200mm-300mm IN DIA.	4.53 cu. m.	5.14 cu. m.
GROUTED RIPRAP	250mm-300mm IN DIA.	13.84 cu. m.	13.17 cu. m.

JICA
JAPAN INTERNATIONAL COOPERATION AGENCY
KEI KATAHIRA & ENGINEERS INTERNATIONAL
YCO YACHIYO ENGINEERING CO., LTD.

	DATE	SIGNATURE
DESIGNED	10/09/02	A. P. GONZALES
CHECKED	10/16/02	A. KATAHIRA
SUBMITTED	10/18/02	M. KIOKA TEAM LEADER

REPUBLIC OF THE PHILIPPINES
DEPARTMENT OF PUBLIC WORKS AND HIGHWAYS

FPJHL – PMO	BUREAU OF DESIGN		OFFICE OF THE SECRETARY	
Submitted By:	Reviewed By:	Recommended By:	Recommended By: (See cover sheet for Signature)	Approved By: (See cover sheet for Signature/Approval)
DANILO C. TRAJANO	PERFECTO L. ZAPLAN JR.	GILBERTO S. REYES	MANUEL M. BONGAN	SIMEON A. DATUMANONG
Project Director	(Chief, Hydraulics Division (OIC))	Director IV (OIC)	Undersecretary	Secretary

PROJECT AND LOCATION :
THE DETAILED DESIGN STUDY ON UPGRADING INTER-URBAN HIGHWAY SYSTEM ALONG THE PAN-PHILIPPINE HIGHWAY (Plaridel, Cabanatuan and San Jose Bypasses)
CABANATUAN BYPASS - CONTRACT PACKAGE II

SCALE : AS SHOWN
FULL SIZE A1

SHEET CONTENTS :
BRIDGE NO. 3
ABUTMENT PROTECTION AND SIDE DRAIN DETAILS (ULTIMATE STAGE)

SHEET NO. : B3-11

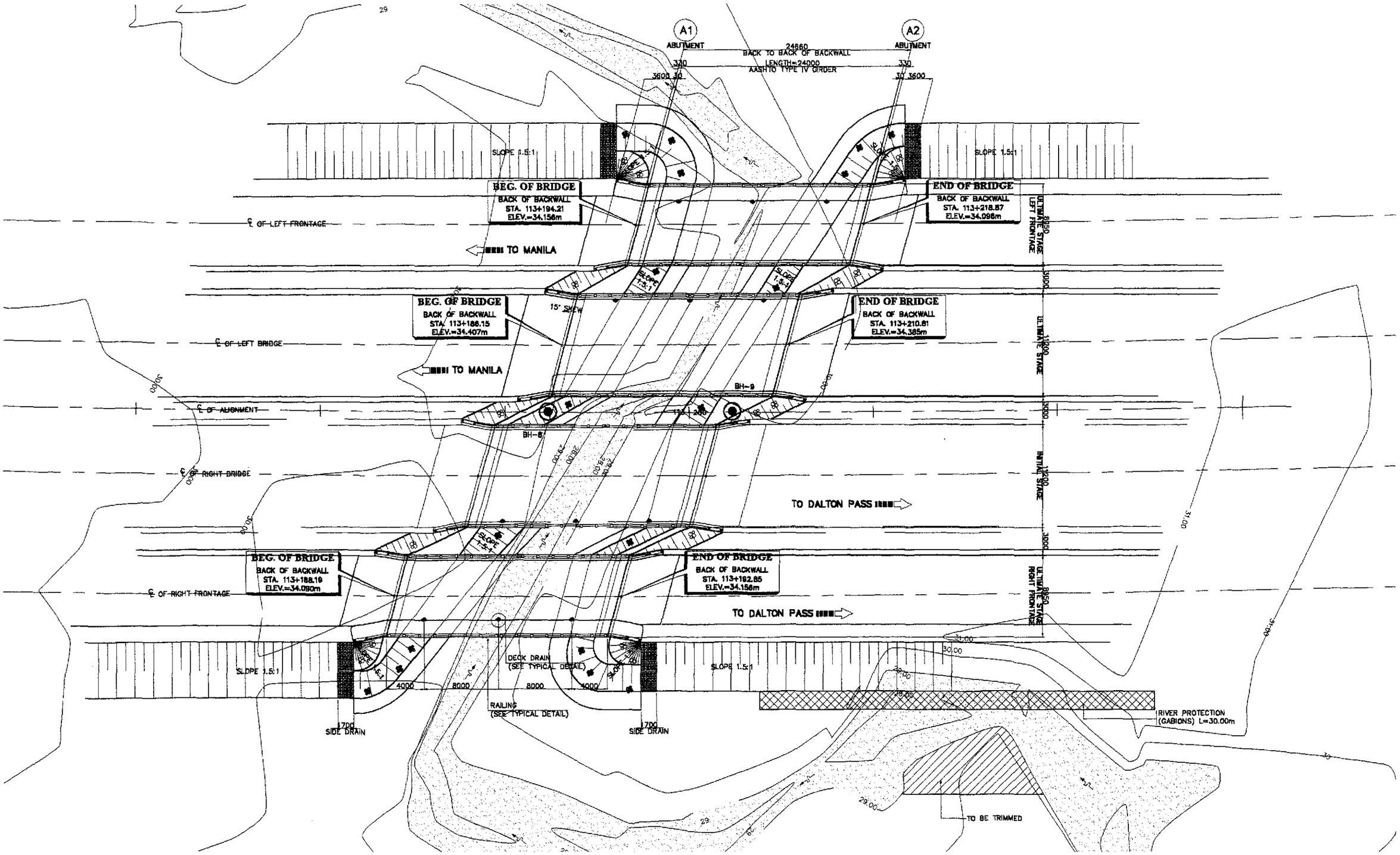

1 GENERAL PLAN
SCALE 1:200

A CABANATUAN BYPASS BRIDGE NO.4 (STA.113+186.15)
SCALE AS SHOWN

PERFECTO L. ZAPLAN JR.
OIC Chief, Hydraulics Division, BOD

JICA
JAPAN INTERNATIONAL COOPERATION AGENCY
KEI KATAHIRA & ENGINEERS INTERNATIONAL
YEO YACHIYO ENGINEERING CO., LTD.

	DATE	SIGNATURE
DESIGNED	10/09/02	E.N. SALLAN
CHECKED	10/16/02	
SUBMITTED	10/18/02	TEAM LEADER

REPUBLIC OF THE PHILIPPINES
DEPARTMENT OF PUBLIC WORKS AND HIGHWAYS

PJHL – PMO	BUREAU OF DESIGN		OFFICE OF THE SECRETARY	
Submitted By:	Reviewed By:	Recommended By:	Recommended By: (See cover sheet for Signature)	Approved By: (See cover sheet for Signature/Approval)
DANILO C. TRAJANO	ADRIANO M. DOROY	GILBERTO S. REYES	MANUEL M. BONOAN	SIMEON A. DATUMANONG
Project Director	Chief, Bridges Division	Director IV (OIC)	Undersecretary	Secretary

PROJECT AND LOCATION :
THE DETAILED DESIGN STUDY ON UPGRADING INTER-URBAN HIGHWAY SYSTEM ALONG THE PAN-PHILIPPINE HIGHWAY (Plaridel, Cabanatuan and San Jose Bypasses)
CABANATUAN BYPASS - CONTRACT PACKAGE II

SCALE : 1 : 200 FULL SIZE A1

SHEET CONTENTS :
BRIDGE NO. 4
GENERAL PLAN
(ULTIMATE STAGE)

SHEET NO. : B4-01

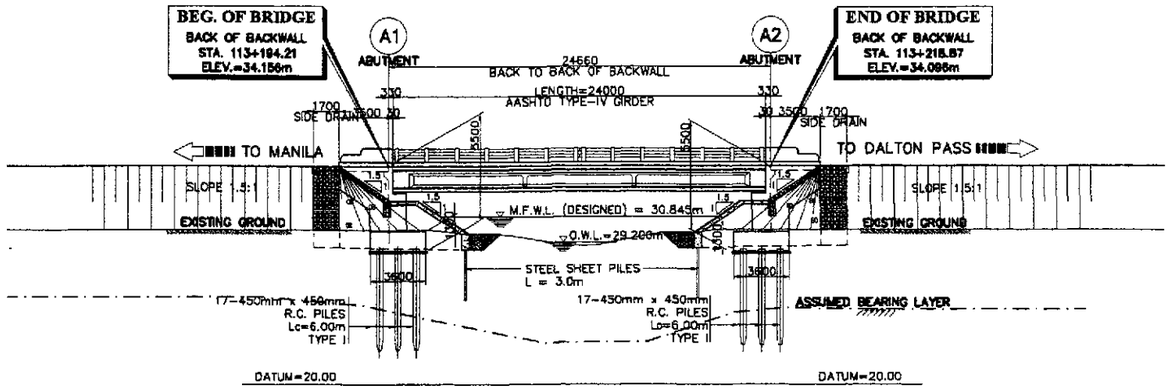

1 - GENERAL ELEVATION @ LEFT FRONTAGE
SCALE 1:200

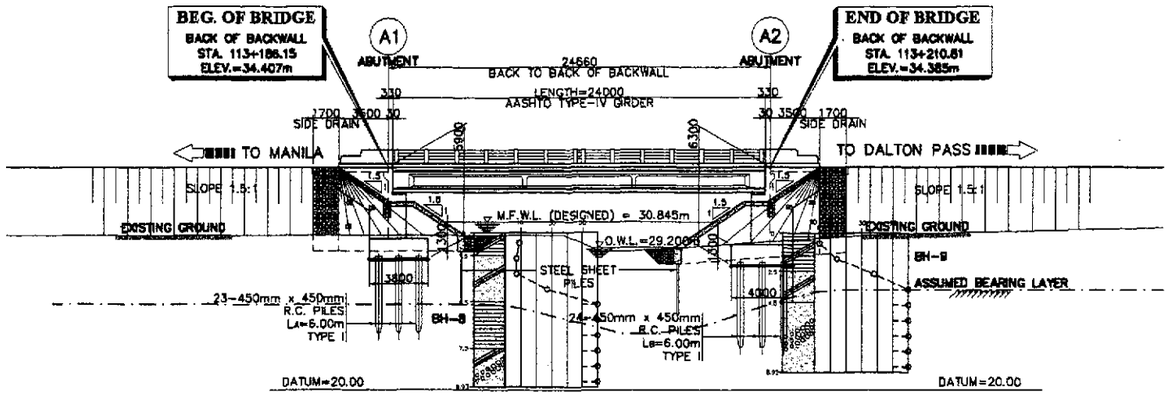

2 - GENERAL ELEVATION
SCALE 1:200

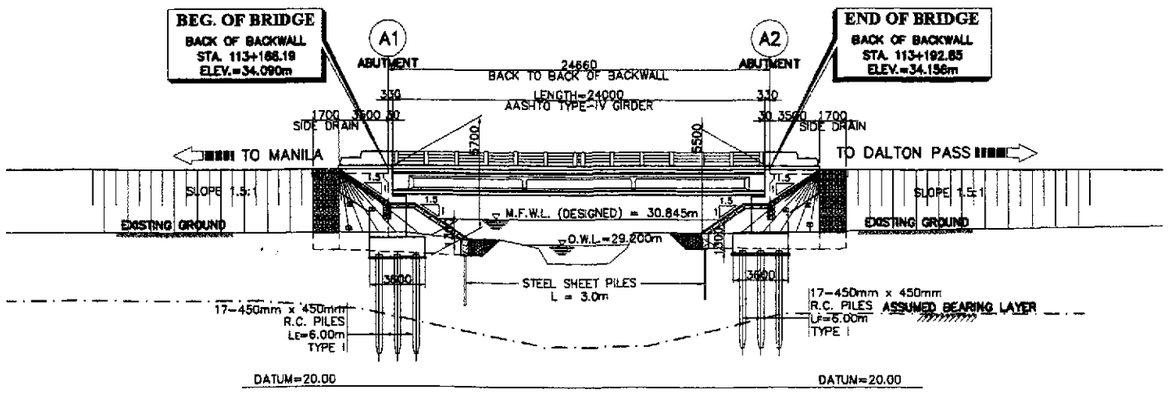

3 - GENERAL ELEVATION @ RIGHT FRONTAGE
SCALE 1:200

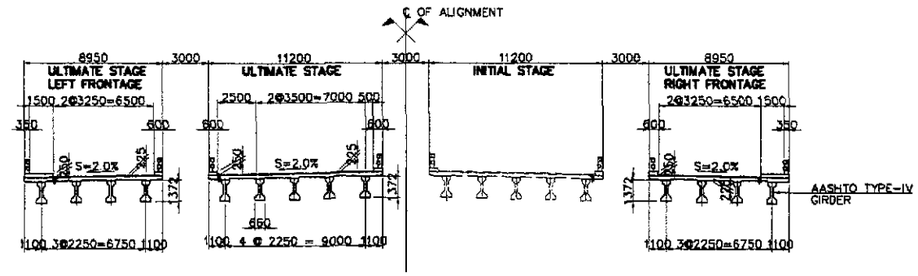

4 - SECTION @ MIDSPAN
SCALE 1:200

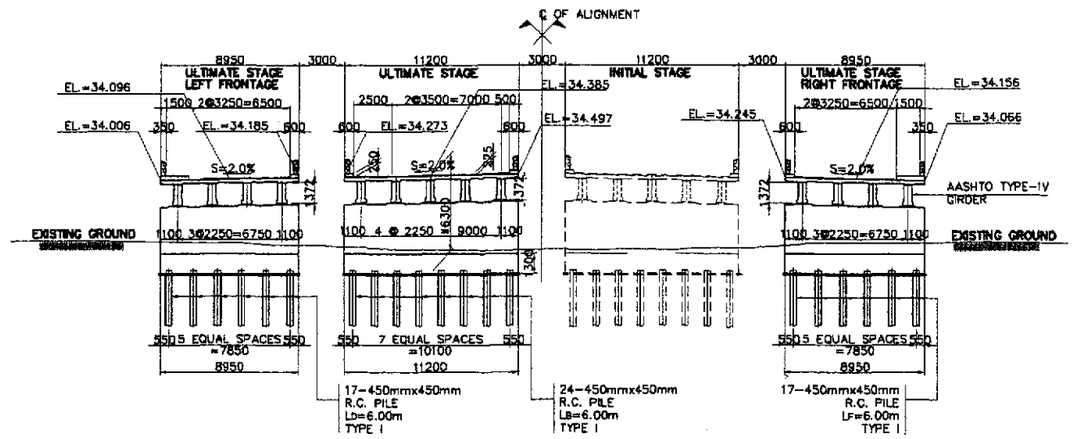

5 - SECTION @ ABUTMENT A2
SCALE 1:200

HYDRAULIC DESIGN DATA	
VELOCITY @ 50 YEARS, V_{50}	2.726 m/sec.
DISCHARGE @ 50 YEARS, Q_{50}	99.700 cu./sec.
CATCHMENT AREA, CA	22.225 sq. km

NOTE :

PRIOR TO CONSTRUCTION SOIL INVESTIGATION AT ABUTMENT A1 SHALL BE CONDUCTED FOR CONFIRMATION OF ASSUMED BEARING CAPACITY AND FOOTING ELEVATION.

THE PILE LENGTH RECOMMENDED ARE MINIMUM. SHOULD THE SOIL AT THE RECOMMENDED LENGTH BE INADEQUATE BEARING MATERIAL, LENGTH SHALL BE INCREASED. THE MINIMUM EMBEDMENT LENGTH INTO ADEQUATE SOIL FOR 400 x 400 R. C. PILE IS 1000mm WHILE FOR 450 x 450 R. C. PILE IS 1200mm.

A - CABANATUAN BYPASS BRIDGE NO.4 (STA. 113+186.15)
SCALE AS SHOWN

PERFECTO L. ZAPLAN JR.
OIC Chief, Hydraulics Division, BOD

JICA
JAPAN INTERNATIONAL COOPERATION AGENCY
KEI KATAHIRA & ENGINEERS INTERNATIONAL
YEC YACHIYO ENGINEERING CO., LTD.

	DATE	SIGNATURE
DESIGNED	10/09/02	E.N. SALLAN
CHECKED	10/16/02	
SUBMITTED	10/18/02	M. MOCHI TEAM LEADER

REPUBLIC OF THE PHILIPPINES
DEPARTMENT OF PUBLIC WORKS AND HIGHWAYS

PUHL - PMO	BUREAU OF DESIGN		OFFICE OF THE SECRETARY	
Submitted By:	Reviewed By:	Recommended By:	Recommended By: (See cover sheet for Signature)	Approved By: (See cover sheet for Signature/Approval)
DANILO C. TRAJANO, Project Director	ADRIANO M. DOROY, Chief, Bridges Division	GILBERTO S. REYES, Director IV (OIC)	MANUEL M. BONGAN, Undersecretary	SIMEON A. DATUMANONG, Secretary

PROJECT AND LOCATION :
THE DETAILED DESIGN STUDY ON UPGRADING INTER-URBAN HIGHWAY SYSTEM ALONG THE PAN-PHILIPPINE HIGHWAY (Plaridel, Cabanatuan and San Jose Bypasses)
CABANATUAN BYPASS - CONTRACT PACKAGE II

SCALE : 1 : 200 FULL SIZE A1

SHEET CONTENTS : BRIDGE NO. 4 GENERAL ELEVATION AND SECTIONS (ULTIMATE STAGE)

SHEET NO. : B4-02

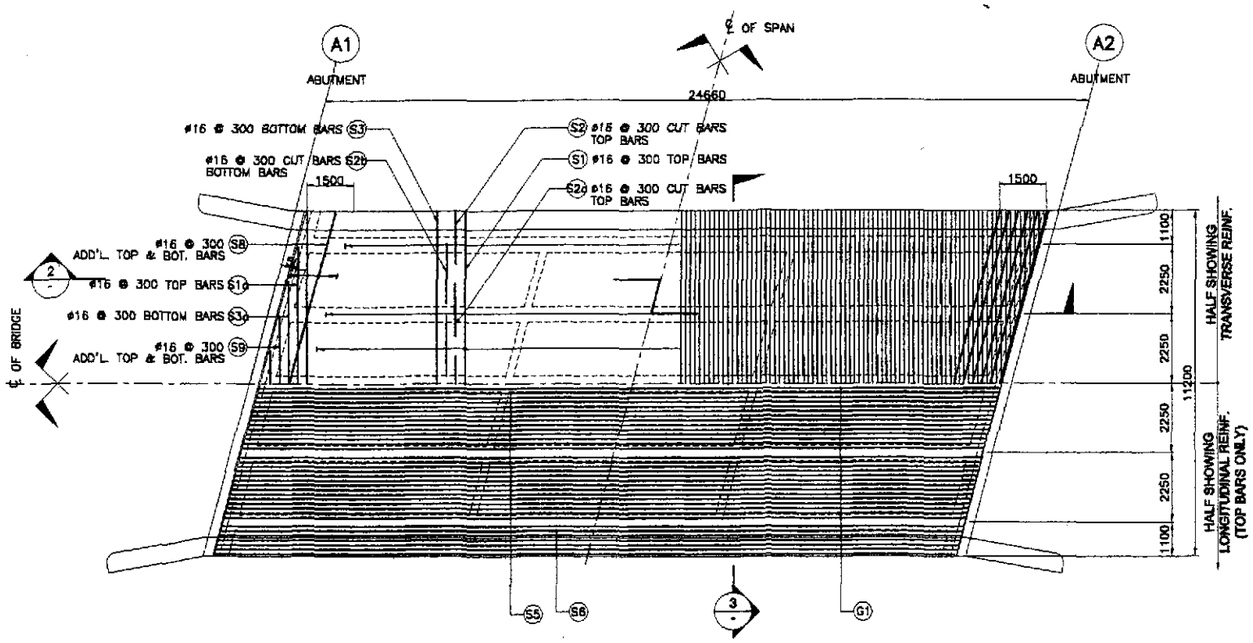

1 FRAMING PLAN
SCALE 1 : 100

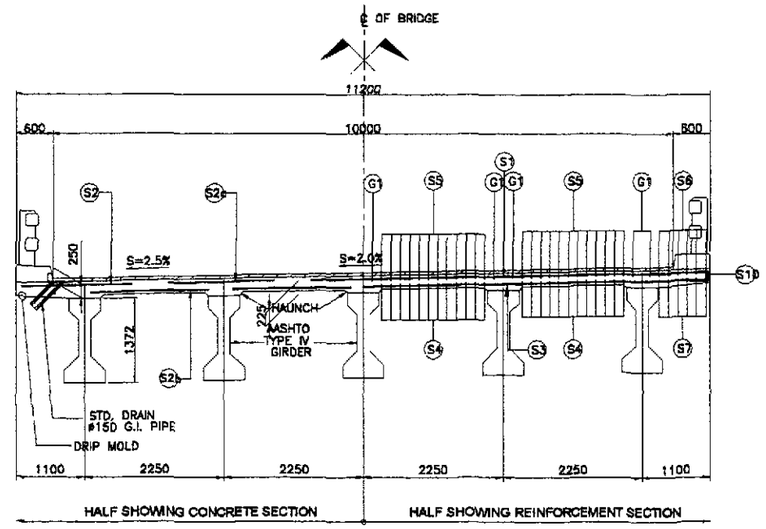

3 TYPICAL CROSS-SECTION
SCALE 1 : 50

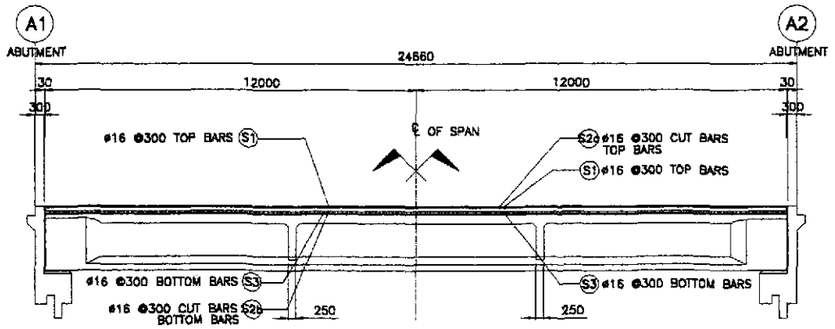

2 LONGITUDINAL SECTION
SCALE 1 : 100

BAR BENDING DIAGRAM

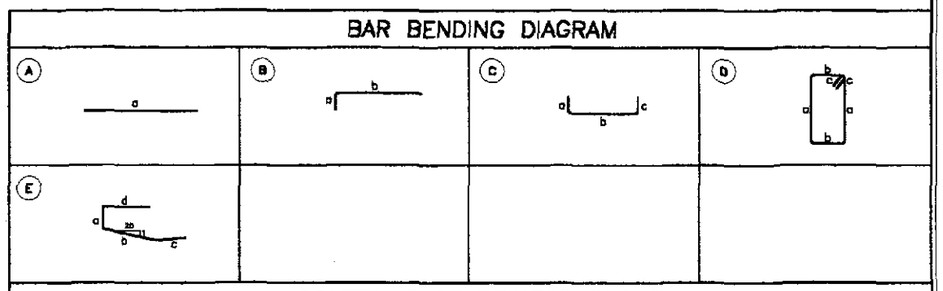

ESTIMATED QUANTITIES OF SUPERSTRUCTURE

ITEM NO.	DESCRIPTION	UNIT	TOTAL
404(1)a	REINFORCING STEEL GRADE 40	kgs.	18,887
	DECK SLAB	10803	
	DIAPHRAGM	340	
	GIRDER	4450	
	SIDEWALK, RAILING, & POST	1920	
	APPROACH SLAB	1374	
404(1)b	REINFORCING STEEL GRADE 60	kgs.	11,519
	DECK SLAB	0	
	DIAPHRAGM	1087	
	GIRDER	5675	
	SIDEWALK, RAILING, & POST	443	
	APPROACH SLAB	4314	
405(1)	STRUCTURAL CONCRETE	cu. m.	185.76
	DECK SLAB	63.83	
	DIAPHRAGM	10.61	
	GIRDER	63.37	
	SIDEWALK, RAILING, & POST	12.73	
	APPROACH SLAB	35.22	

SCHEDULE OF REINFORCEMENT

LOCATION	CONCRETE VOLUME (m^3)	BAR MARK	BAR SIZE	QTY.	SPACING	BAR SHAPE	DIMENSIONS (mm) CUT TO CUT a	b	c	d	LENGTH EACH BAR (mm)	TOTAL LENGTH (m)	UNIT WT. (kg/m)	WEIGHT IN (kg)	REBAR RATIO (kg/m^3)
DECK SLAB	63.83	G1	16	20	AS SHOWN	A	23900	–	–	–	23900	239.00	1.579	378	169.25
		S1	16	71	300	C	145	11100	145	–	11390	808.69	1.579	1277	
		S1a	16	22	300	C	145	6150	145	–	6440	141.68	1.579	224	
		S2	16	142	300	B	145	1800	–	–	1945	276.19	1.579	437	
		S2a	16	213	300	A	1700	–	–	–	1700	362.10	1.579	572	
		S2b	16	284	300	A	1950	–	–	–	1950	553.80	1.579	875	
		S3	16	71	300	A	11100	–	–	–	11100	788.10	1.579	1245	
		S3a	16	22	300	A	6150	–	–	–	6150	135.30	1.579	214	
		S4	16	48	150	A	23900	–	–	–	23900	1147.20	1.579	1812	
		S5	16	48	150	A	23900	–	–	–	23900	1147.20	1.579	1812	
		S6	16	12	AS SHOWN	A	23900	–	–	–	23900	286.80	1.579	453	
		S7	16	12	AS SHOWN	A	23900				23900	286.80	1.579	453	
		S8	16	24	AS SHOWN	A	11500	–	–	–	11500	276.00	1.579	436	
		S9	16	44	AS SHOWN	A	6150	–	–	–	6150	270.60	1.579	428	
		S10	12	108	450	E	145	900	600	300	1945	210.06	0.888	187	
TOTAL	63.83												GRADE 40 TOTAL =		10,803 Kgs.

JICA
JAPAN INTERNATIONAL COOPERATION AGENCY
KEI KATAHIRA & ENGINEERS INTERNATIONAL
YEO YACHIYO ENGINEERING CO., LTD.

	DATE	SIGNATURE
DESIGNED	10/6 9/08	E.P.N. SALLAN
CHECKED	10/16/08	
SUBMITTED	10/18/08	M. KOUCHI TEAM LEADER

REPUBLIC OF THE PHILIPPINES
DEPARTMENT OF PUBLIC WORKS AND HIGHWAYS

PMMC – PMO	BUREAU OF DESIGN		OFFICE OF THE SECRETARY	
Submitted By:	Reviewed By:	Recommended By:	Recommended By: (See cover sheet for Signature)	Approved By: (See cover sheet for Signature/Approval)
DANILO C. TRAJANO	ADRIANO M. DOROY	GILBERTO S. REYES	MANUEL M. BONDAN	SIMEON A. DATUMANONG
Project Director	Chief, Bridges Division	Director IV (OIC)	Undersecretary	Secretary

PROJECT AND LOCATION :
THE DETAILED DESIGN STUDY ON UPGRADING INTER-URBAN HIGHWAY SYSTEM ALONG THE PAN-PHILIPPINE HIGHWAY
(Plaridel, Cabanatuan and San Jose Bypasses)
CABANATUAN BYPASS - CONTRACT PACKAGE II

SCALE : AS SHOWN
FULL SIZE A1

SHEET CONTENTS :
BRIDGE NO. 4 & 5
DECK FRAMING PLAN AND SECTIONS
(ULTIMATE STAGE)

SHEET NO. : B4-03

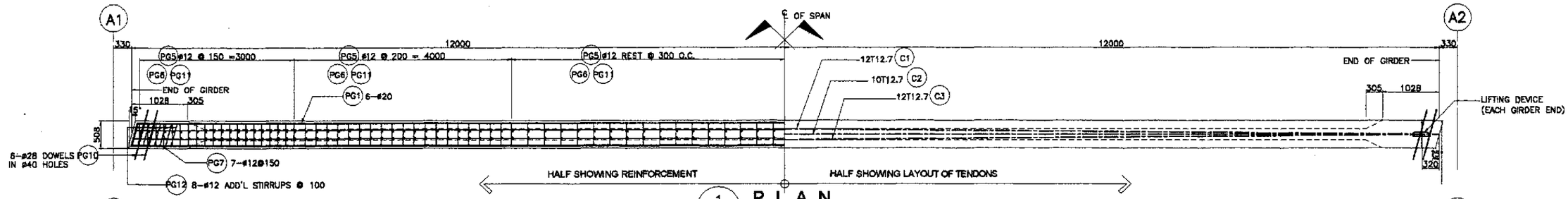

1 PLAN
SCALE 1:40

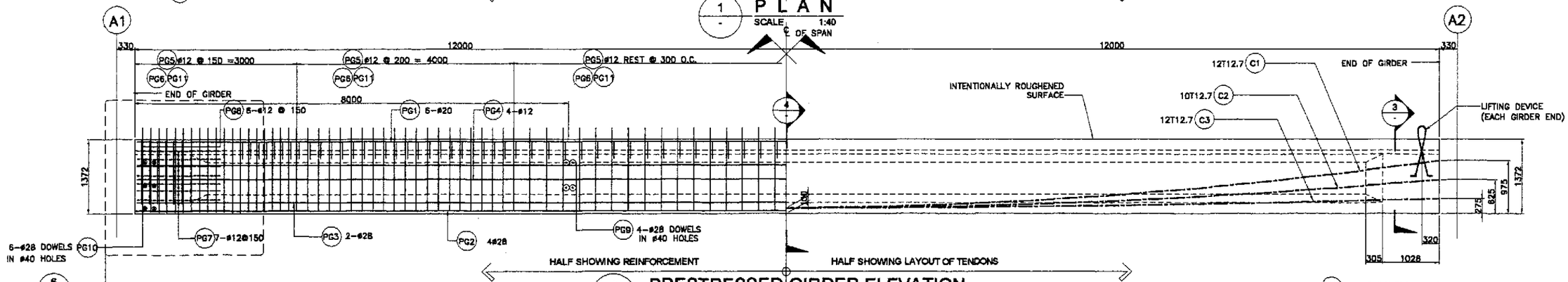

2 PRESTRESSED GIRDER ELEVATION
SCALE 1:40

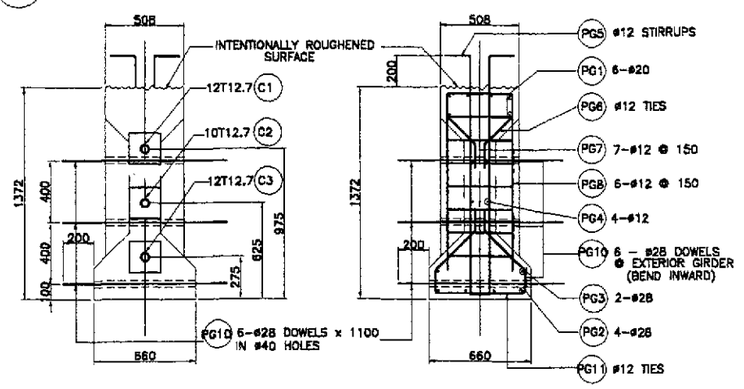

3 SECTION AT END
SCALE 1:20

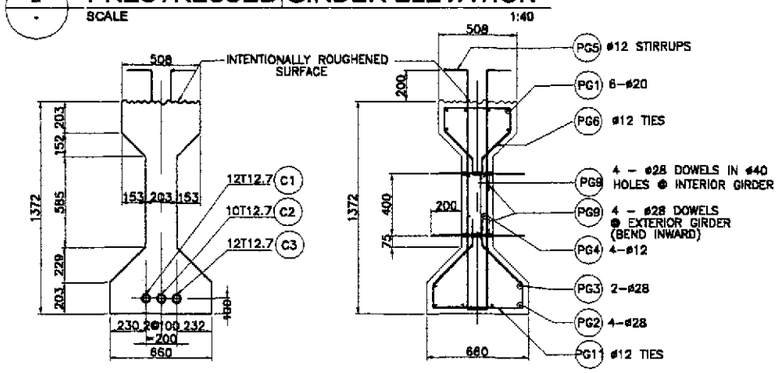

4 SECTION AT MIDSPAN
SCALE 1:20

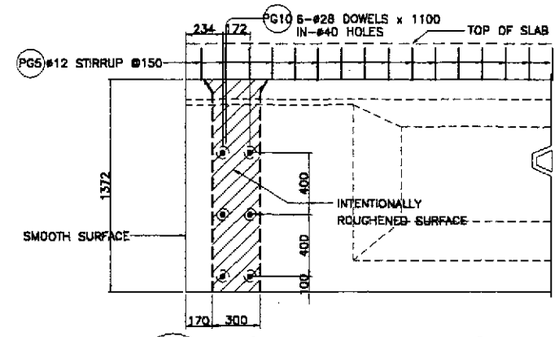

5 DOWELS @ END BLOCK
SCALE 1:20

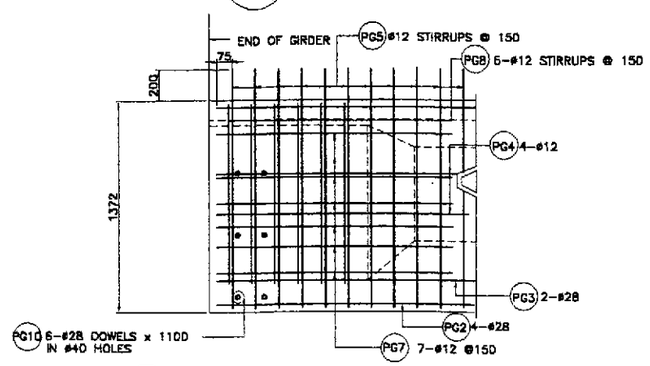

6 END BLOCK REINF. DETAIL
SCALE 1:20

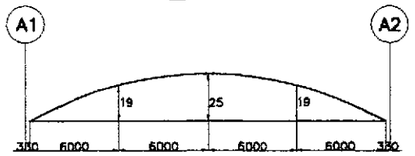

7 CAMBER DIAGRAM
NOT TO SCALE

NOTES :

1.) SEE GENERAL NOTES, -2, FOR GIRDER DESIGN GUIDE.
2.) JACKING FORCE PER GIRDER, P_J = 4,681 KN.
3.) JACKING WILL BE DONE AT BOTH ENDS.
4.) FINAL PRESTRESSING FORCE @ MIDSPAN, F_{NET} = 3,405 kN

BAR BENDING DIAGRAM

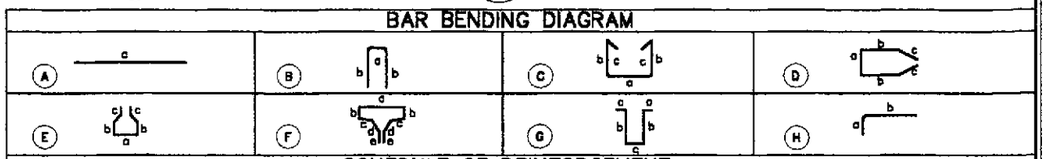

SCHEDULE OF REINFORCEMENT

STRUCTURE COMPONENT	BAR MARK	SIZE (mm)	QTY.	SPACING	BAR SHAPE	DIMENSION(mm) a	b	c	d	e	LENGTH PER BAR (mm)	TOTAL LENGTH (m)	UNIT WEIGHT (kg/m)	TOTAL WEIGHT (kg)	CONC. VOLUME (cu.m)	REBAR RATIO (kg/cu.m)	REMARKS
GIRDER	PG1	20	5	AS SHOWN	A	23920	–	–	–	–	23920	143.52	2.466	354	12.67	159.78	QUANTITIES ARE FOR ONE (1) GIRDER ONLY
	PG2	28	4	AS SHOWN	A	23920	–	–	–	–	23920	95.68	4.833	463			
	PG3	28	2	AS SHOWN	A	23920	–	–	–	–	23920	47.84	4.833	232			
	PG4	12	4	AS SHOWN	A	23920	–	–	–	–	23920	95.68	0.888	85			
	PG5	12	112	150	G	100	1540	103	–	–	3383	378.90	0.888	337			
	PG6	12	112	150	E	430	160	150	260	–	1570	175.84	0.888	157			
	PG7	12	14	150	D	430	1000	550	–	–	3530	49.42	0.888	44			
	PG8	12	12	150	C	430	1230	150	–	–	3190	38.28	0.888	34			
	PG9	28	8	AS SHOWN	A	603	–	–	–	–	603	4.82	4.833	24			
	PG10	28	12	AS SHOWN	A	1060	–	–	–	–	1060	12.72	4.833	62			
	PG11	12	112	150	E	580	160	150	360	–	1920	215.04	0.888	191			
	PG12	12	16	100	B	430	1230	–	–	–	2890	46.24	0.888	42			

GRADE 40 TOTAL = 890 Kgs.
GRADE 60 TOTAL = 1,135 Kgs.

JICA
JAPAN INTERNATIONAL COOPERATION AGENCY
KEI KATAHIRA & ENGINEERS INTERNATIONAL
YCO YACHIYO ENGINEERING CO., LTD.

	DATE	SIGNATURE
DESIGNED	10/09/02	E. N. SALLAN
CHECKED	10/16/02	
SUBMITTED	10/18/02	MR. KUDOH TEAM LEADER

REPUBLIC OF THE PHILIPPINES
DEPARTMENT OF PUBLIC WORKS AND HIGHWAYS

PUHL – PMO	BUREAU OF DESIGN		OFFICE OF THE SECRETARY	
Submitted By:	Reviewed By:	Recommended By:	Recommended By: (See cover sheet for Signature)	Approved By: (See cover sheet for Signature/Approval)
DANILO C. TRAJANO Project Director	ADRIANO M. DOROY Chief, Bridges Division	GILBERTO S. REYES Director IV (OIC)	MANUEL M. BONOAN Undersecretary	SIMEON A. DATUMANONG Secretary

PROJECT AND LOCATION :
THE DETAILED DESIGN STUDY ON UPGRADING INTER-URBAN HIGHWAY SYSTEM ALONG THE PAN-PHILIPPINE HIGHWAY (Plaridel, Cabanatuan and San Jose Bypasses)
CABANATUAN BYPASS - CONTRACT PACKAGE II

SCALE :
AS SHOWN
FULL SIZE A1

SHEET CONTENTS :
BRIDGE NO. 4 & 5
AASHTO TYPE IV GIRDER
(ULTIMATE STAGE)

SHEET NO. :
B4-04

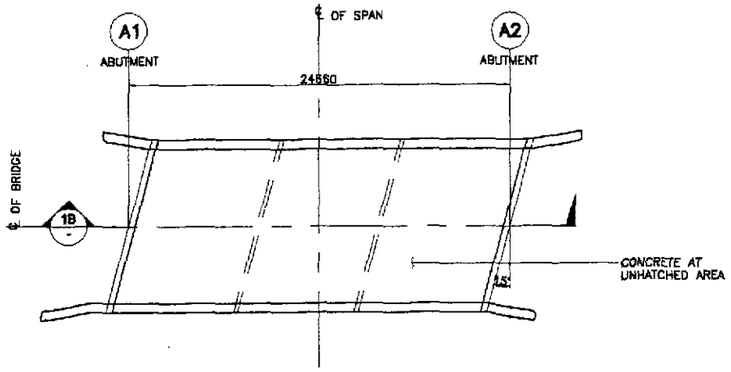

1A PLAN
SCALE 1:200

NOTES:

1. CONCRETE AT HATCHED AREAS SHALL BE PLACED AT LEAST TWENTY ONE (21) DAYS AHEAD OF CONCRETE AT UNHATCHED AREAS.
2. SEE GIRDER DETAILS FOR SPACING OF ø28 DOWELS.

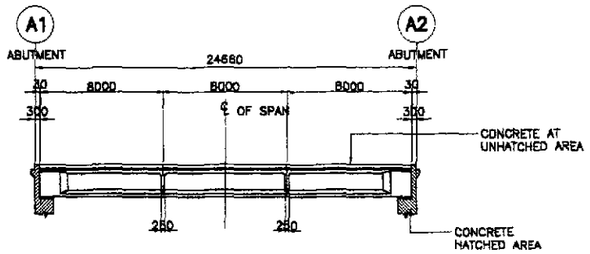

1B LONGITUDINAL SECTION
SCALE 1:200

1 CONCRETE POURING SEQUENCE
SCALE 1:200

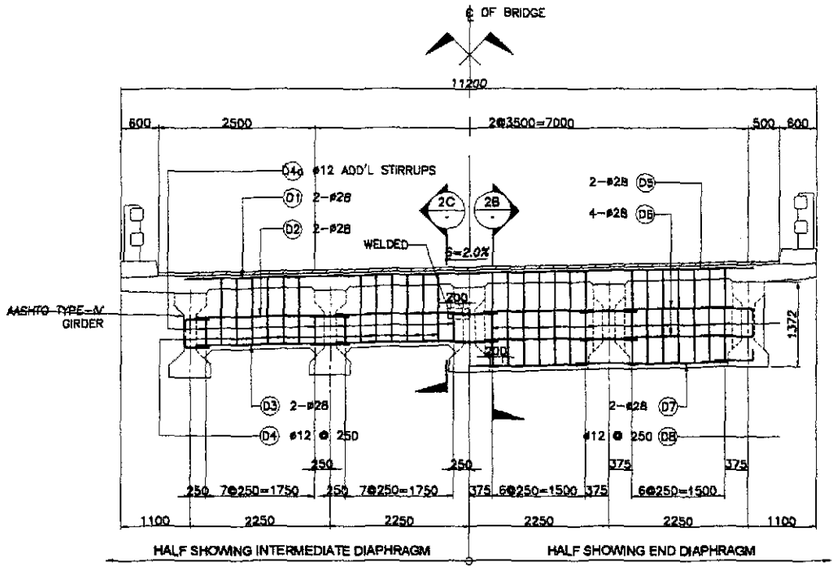

2A ELEVATION
SCALE 1:50

BAR BENDING DIAGRAM

(A)

(B)

SCHEDULE OF REINFORCEMENT

STRUCTURE COMPONENT	LOCATION	CONCRETE VOLUME (m^3)	BAR MARK	BAR SIZE	QTY.	SPACING	BAR SHAPE	DIMENSIONS (mm) OUT TO OUT a	b	c	d	LENGTH PER BAR (mm)	TOTAL LENGTH (m)	UNIT WT. (kg/m)	TOTAL WEIGHT IN (kg)	REBAR RATIO (kg/m^3)
DIAPHRAGM	INTERMEDIATE DIAPHRAGM	4.67	D1	28	4	AS SHOWN	A	9400				9400	37.60	4.833	182	139.49
			D2	28	16	AS SHOWN	A	2045				2045	32.72	4.833	159	
			D3	28	16	AS SHOWN	A	2045				2045	32.72	4.833	159	
			D4	12	48	250	B	150	1200	150		3000	144.00	0.888	128	
			D4a	12	16	AS SHOWN	B	150	500	150		1600	25.60	0.888	23	
	END DIAPHRAGM	5.95	D5	28	4	AS SHOWN	A	9400				9400	37.60	4.833	182	130.53
			D6	28	32	AS SHOWN	A	1740				1740	55.68	4.833	270	
			D7	28	16	AS SHOWN	A	1740				1740	27.84	4.833	135	
			D8	12	56	250	B	200	1550	150		3800	212.80	0.888	189	
													GRADE 60 TOTAL = 1,087 Kgs.			
	TOTAL	10.61											GRADE 40 TOTAL = 340 Kgs.			

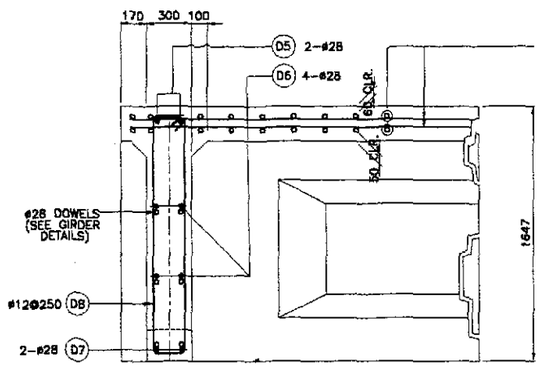

2B SECTION
SCALE 1:20

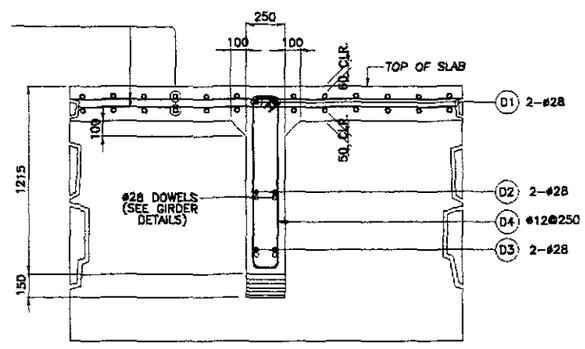

2C SECTION
SCALE 1:20

2 DETAIL OF END & INTERMEDIATE DIAPHRAGM
SCALE AS SHOWN

JICA
JAPAN INTERNATIONAL COOPERATION AGENCY
KEI KATAHIRA & ENGINEERS INTERNATIONAL
YEC YACHIYO ENGINEERING CO., LTD.

	DATE	SIGNATURE
DESIGNED	10/09/07	E. N. GALLAN
CHECKED	10/10/07	
SUBMITTED	10/18/07	M. KOUDAI TEAM LEADER

REPUBLIC OF THE PHILIPPINES
DEPARTMENT OF PUBLIC WORKS AND HIGHWAYS

PUHL - PMO	BUREAU OF DESIGN		OFFICE OF THE SECRETARY	
Submitted By:	Reviewed By:	Recommended By:	Recommended By: (See cover sheet for Signature)	Approved By: (See cover sheet for Signature/Approval)
DANILO C. TRAJANO	ADRIANO M. DOROY	GILBERTO S. REYES	MANUEL M. BONGAN	SIMEON A. DATUMANONG
Project Director	Chief, Bridges Division	Director IV (OIC)	Undersecretary	Secretary

PROJECT AND LOCATION :	SCALE :	SHEET CONTENTS :	SHEET NO. :
THE DETAILED DESIGN STUDY ON UPGRADING INTER-URBAN HIGHWAY SYSTEM ALONG THE PAN-PHILIPPINE HIGHWAY (Plaridel, Cabanatuan and San Jose Bypasses)	AS SHOWN	BRIDGE NO. 4 & 5 CONCRETE POURING SEQUENCE AND DIAPHRAGM DETAILS (ULTIMATE STAGE)	B4-05
CABANATUAN BYPASS - CONTRACT PACKAGE II	FULL SIZE A1		

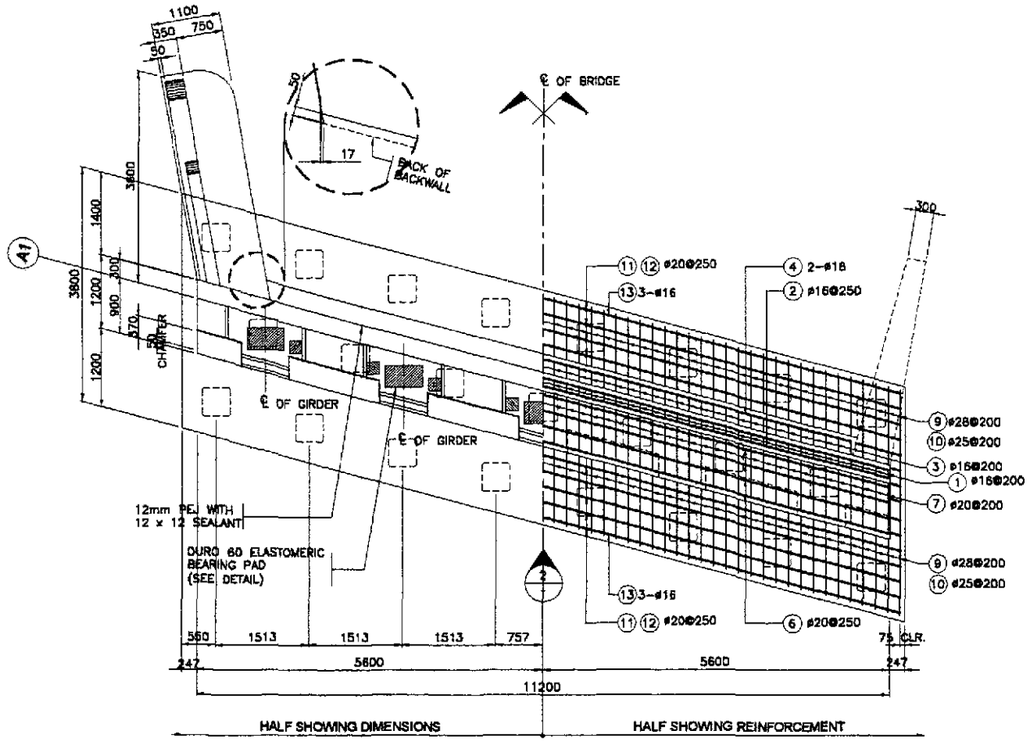

1 PLAN
SCALE 1:50

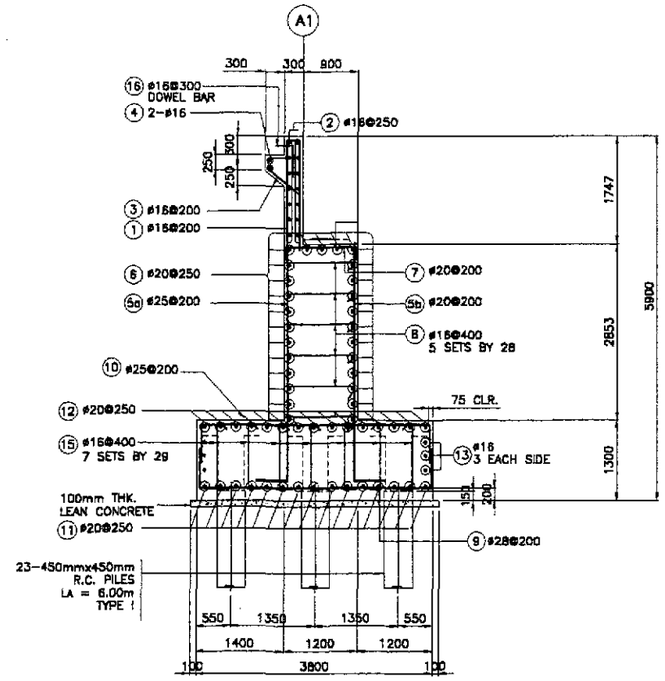

3 SECTION
SCALE 1:50

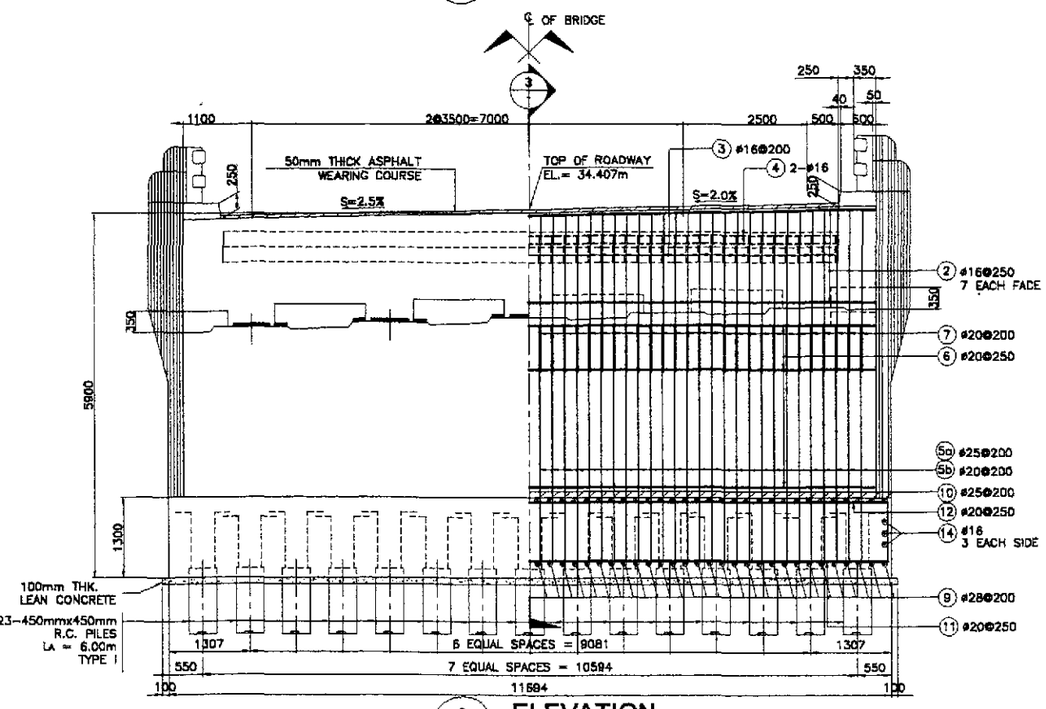

2 ELEVATION
SCALE 1:50

BAR BENDING DIAGRAM

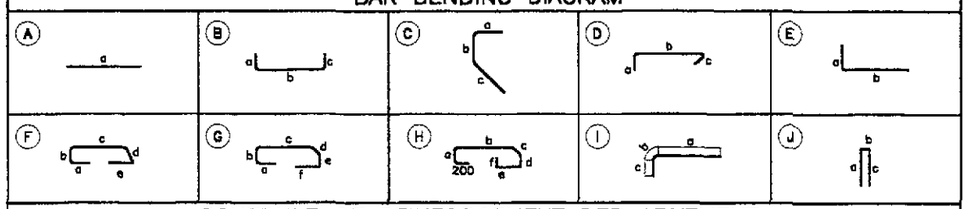

SCHEDULE OF REINFORCEMENT PER ABUTMENT

LOCATION	CONCRETE VOLUME (m^3)	BAR MARK	BAR SIZE	QTY.	SPACING	BAR SHAPE	DIMENSIONS (mm) OUT TO OUT a	b	c	d	e	f	LENGTH EA. BAR (mm)	TOTAL LENGTH (m)	UNIT WT. (kg/m)	WEIGHT (kg)	REBAR RATIO (kg/m^3)
BACKWALL	6.99	①	16	57	200	B	2000	200	2000	–	–	–	4200	239.40	1.579	379	112.65
		②	16	14	250	A	11500	–	–	–	–	–	11500	161.00	1.579	255	
		③	16	51	200	C	600	150	750	–	–	–	1500	76.50	1.579	121	
		④	16	2	AS SHOWN	A	10250	–	–	–	–	–	10250	20.50	1.579	33	
MAINWALL	38.34	⑤a	25	57	200	E	400	3900	–	–	–	–	4300	245.10	3.854	945	75.50
		⑤b	20	57	200	E	400	3900	–	–	–	–	4300	245.10	2.466	605	
		⑥	20	27	250	A	11500	–	–	–	–	–	11500	310.50	2.466	766	
		⑦	20	57	200	B	250	1100	250	–	–	–	1600	91.20	2.466	225	
		⑧	16	140	400	D	250	1100	250	–	–	–	1600	224.00	1.579	354	
FOOTING	57.77	⑨	28	59	200	B	700	3650	700	–	–	–	5050	297.95	4.833	1440	74.80
		⑩	25	59	200	B	700	3650	700	–	–	–	5050	297.95	3.854	1148	
		⑪	20	16	250	B	700	11950	700	–	–	–	13350	213.60	2.466	527	
		⑫	20	16	250	B	700	11950	700	–	–	–	13350	213.60	2.466	527	
		⑬	16	6	AS SHOWN	A	11950	–	–	–	–	–	11950	71.70	1.579	114	
		⑭	16	6	AS SHOWN	A	3650	–	–	–	–	–	3650	21.90	1.579	35	
		⑮	16	203	400	D	250	1150	250				1650	334.95	1.579	529	
DOWEL		⑯	16	34	300	E	650	500	–	–	–	–	1150	39.10	1.579	62	
TOTAL	103.11												GRADE 40 TOTAL = 1,882 kgs. GRADE 60 TOTAL = 6,184 kgs.				

JICA
JAPAN INTERNATIONAL COOPERATION AGENCY
KEI KATAHIRA & ENGINEERS INTERNATIONAL
YOO YACHIYO ENGINEERING CO., LTD.

	DATE	SIGNATURE
DESIGNED	10/06/02	M. P. GONZALES
CHECKED	10/06/02	[illegible]
SUBMITTED	10/18/02	[illegible] TEAM LEADER

REPUBLIC OF THE PHILIPPINES
DEPARTMENT OF PUBLIC WORKS AND HIGHWAYS

PUHL - PMO	BUREAU OF DESIGN		OFFICE OF THE SECRETARY	
Submitted By:	Reviewed By:	Recommended By:	Recommended By: (See cover sheet for Signature)	Approved By: (See cover sheet for Signature/Approval)
DANILO C. TRAJANO	ADRIANO M. DOROY	GILBERTO S. REYES	MANUEL M. BONOAN	SIMEON A. DATUMANONG
Project Director	Chief, Bridges Division	Director IV (OIC)	Undersecretary	Secretary

PROJECT AND LOCATION :
THE DETAILED DESIGN STUDY ON UPGRADING INTER-URBAN HIGHWAY SYSTEM ALONG THE PAN-PHILIPPINE HIGHWAY (Plaridel, Cabanatuan and San Jose Bypasses)
CABANATUAN BYPASS - CONTRACT PACKAGE II

SCALE : 1 : 50 FULL SIZE A1

SHEET CONTENTS :
BRIDGE NO. 4
ABUTMENT A1
MAINWALL REINFORCEMENT DETAILS
(ULTIMATE STAGE)

SHEET NO. : B4-06

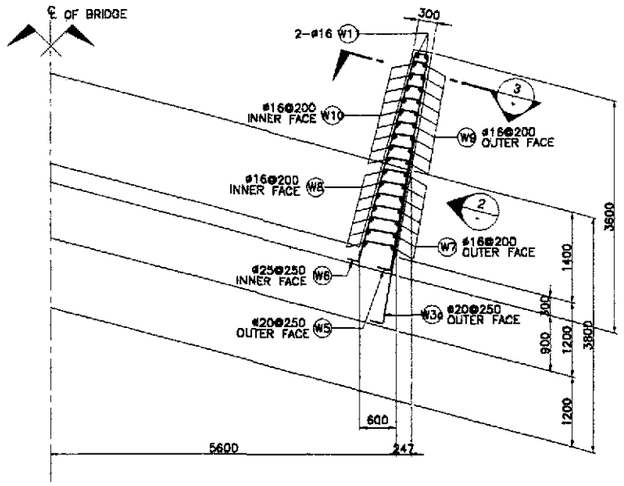

1 PLAN
SCALE 1:50

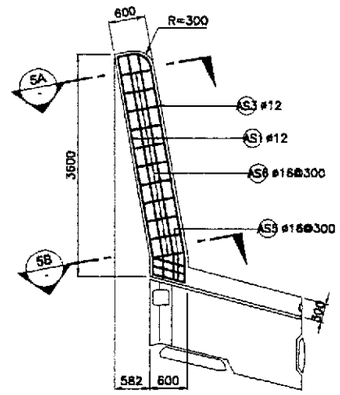

4 SIDEWALK DETAIL
SCALE 1:50

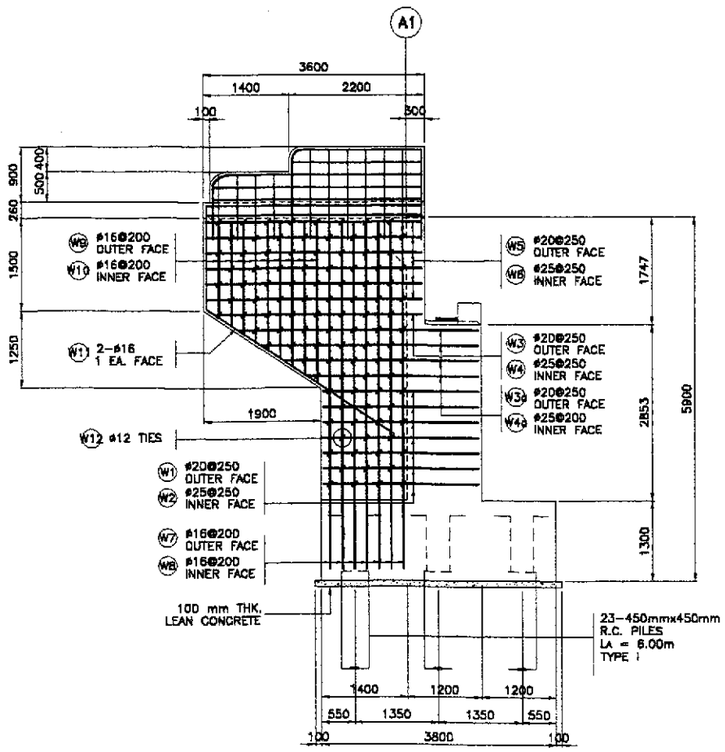

2 WINGWALL ELEVATION
SCALE 1:50

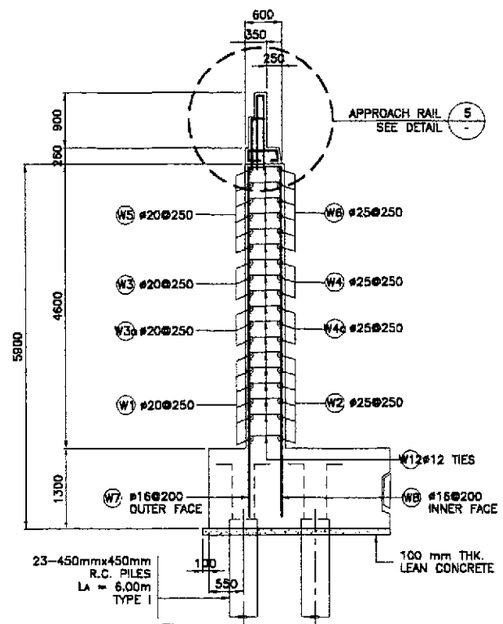

3 SECTION
SCALE 1:50

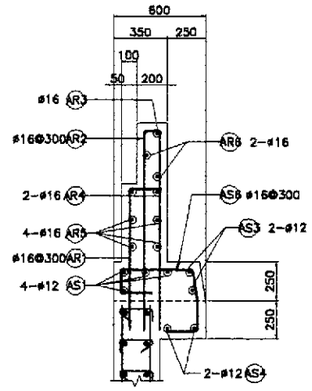

5A SECTION
SCALE 1:20

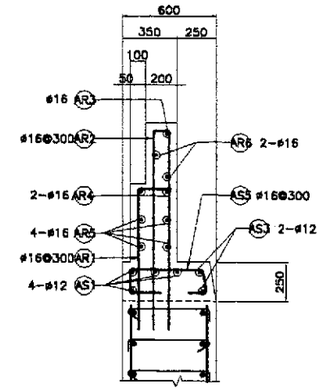

5B SECTION
SCALE 1:20

5 APPROACH RAIL DETAILS
SCALE 1:20

BAR BENDING DIAGRAM

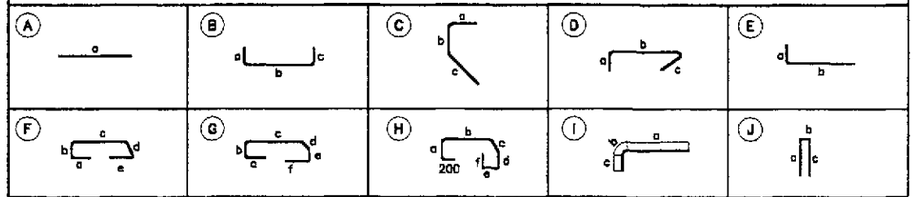

SCHEDULE OF REINFORCEMENT PER ABUTMENT

LOCATION	CONCRETE VOLUME (m^3)	BAR MARK	BAR SIZE	QTY.	SPACING	BAR SHAPE	DIMENSIONS (mm) OUT TO OUT a	b	c	d	e	f	LENGTH EA. BAR (mm)	TOTAL LENGTH (m)	UNIT WT. (kg/m)	WEIGHT (kg)	REBAR RATIO (kg/m^3)
WINGWALL	9.43	W1	20	14	250	B	400	2500	150	–	–	–	3050	42.70	2.466	106	148.78
		W2	25	14	250	B	400	2500	150	–	–	–	3050	42.70	3.854	165	
		W3	20	2	250	B	400	3400	150	–	–	–	3950	7.10	2.466	20	
		W3a	20	8	250	B	400	3350	150	–	–	–	3900	31.20	2.466	77	
		W4	25	2	250	B	400	3400	150	–	–	–	3950	7.90	3.854	31	
		W4a	25	8	250	B	400	3350	150	–	–	–	3900	31.20	3.854	121	
		W5	20	12	250	B	400	3500	150	–	–	–	4050	48.60	2.466	120	
		W6	25	12	250	B	400	3500	150	–	–	–	4050	48.60	3.854	188	
		W7	16	14	200	E	250	5650	–	–	–	–	5900	82.60	1.579	131	
		W8	16	14	200	E	250	5650	–	–	–	–	5900	82.60	1.579	131	
		W9	16	18	200	E	250	2100	–	–	–	–	2350	42.30	1.579	67	
		W10	16	18	200	E	250	2100	–	–	–	–	2350	42.30	4.579	67	
		W11	16	4	AS SHOWN	C	250	1500	3500	–	–	–	5250	21.00	1.579	34	
		W12	12	205	AS SHOWN	D	170	450	170	–	–	–	790	162.74	0.888	145	
														GRADE 60 TOTAL		= 828 kgs.	
														GRADE 40 TOTAL		= 575 kgs.	
APPROACH RAILING AND SIDEWALK	3.03	AS1	12	8	AS SHOWN	A	3500	–	–	–	–	–	3500	28.00	0.888	25	97.16
		AS2	12	4	AS SHOWN	A	3500	–	–	–	–	–	3500	14.00	0.888	13	
		AS3	12	4	AS SHOWN	A	3500	–	–	–	–	–	3500	14.00	0.888	13	
		AS4	16	6	300	F	200	170	480	200	200	–	1250	7.50	1.579	12	
		AS5	16	22	300	G	200	170	480	200	170	200	1420	31.24	1.579	50	
		AR1	16	8	300	E	200	900	–	–	–	–	1100	8.80	1.579	14	
		AR2	16	16	300	J	1300	120	1300	–	–	–	2720	43.52	1.579	69	
		AR3	16	2	AS SHOWN	I	2100	236	1300	–	–	–	3636	7.27	1.579	12	
		AR4	16	4	AS SHOWN	I	3400	236	900	–	–	–	4536	18.14	1.579	29	
		AR5	16	8	AS SHOWN	A	3400	–	–	–	–	–	3400	27.20	1.579	43	
		AR6	16	4	AS SHOWN	A	2100	–	–	–	–	–	2100	8.40	1.579	14	
														GRADE 40 TOTAL = 294			
TOTAL	12.33															GRADE 60 TOTAL = 828 kgs. GRADE 40 TOTAL = 869 kgs.	

JICA
JAPAN INTERNATIONAL COOPERATION AGENCY
KEI KATAHIRA & ENGINEERS INTERNATIONAL
YACHIYO ENGINEERING CO., LTD.

	DATE	SIGNATURE
DESIGNED	10/09/02	A. B. GONZALES
CHECKED	10/16/02	
SUBMITTED	10/18/02	TEAM LEADER

REPUBLIC OF THE PHILIPPINES
DEPARTMENT OF PUBLIC WORKS AND HIGHWAYS

PJHL – PMO	BUREAU OF DESIGN		OFFICE OF THE SECRETARY	
Submitted By:	Reviewed By:	Recommended By:	Recommended By: (See cover sheet for Signature)	Approved By: (See cover sheet for Signature/Approval)
DANILO C. TRAJANO	ADRIANO M. DOROY	GILBERTO S. REYES	MANUEL M. BONOAN	SIMEON A. DATUMANONG
Project Director	Chief, Bridges Division	Director IV (OIC)	Undersecretary	Secretary

PROJECT AND LOCATION :
THE DETAILED DESIGN STUDY ON UPGRADING INTER-URBAN HIGHWAY SYSTEM ALONG THE PAN-PHILIPPINE HIGHWAY (Plaridel, Cabanatuan and San Jose Bypasses)
CABANATUAN BYPASS - CONTRACT PACKAGE II

SCALE :
AS SHOWN
FULL SIZE A1

SHEET CONTENTS :
BRIDGE NO. 4
ABUTMENT A1
WINGWALL REINFORCEMENT DETAILS
(ULTIMATE STAGE)

SHEET NO. :
B4-07

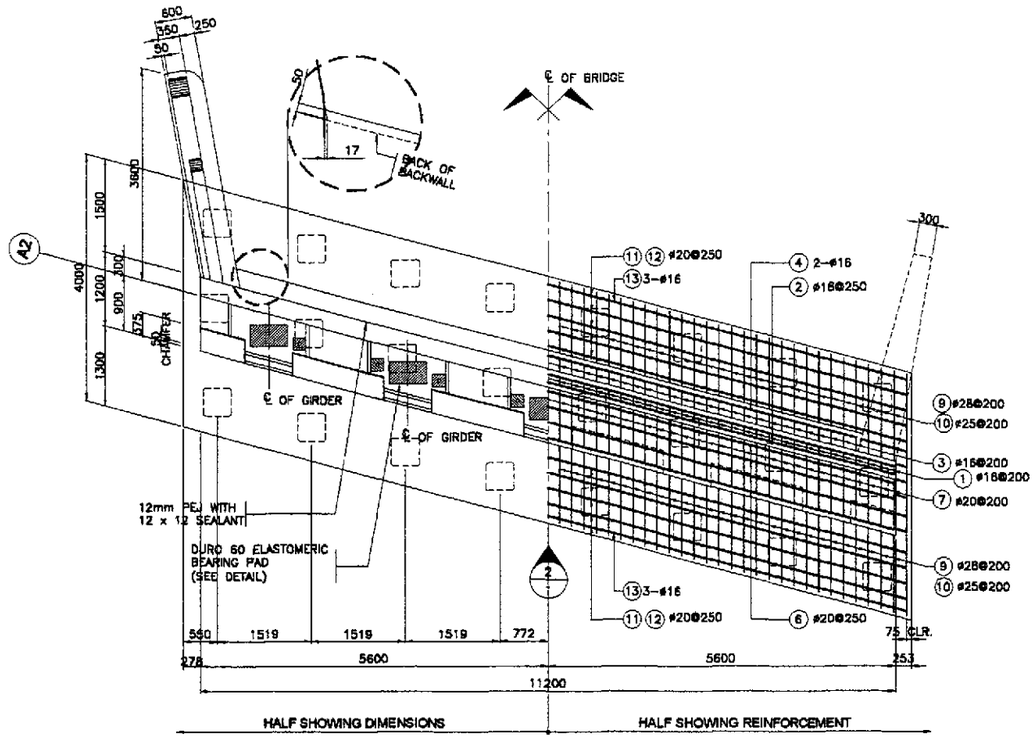

1 PLAN
SCALE 1:50

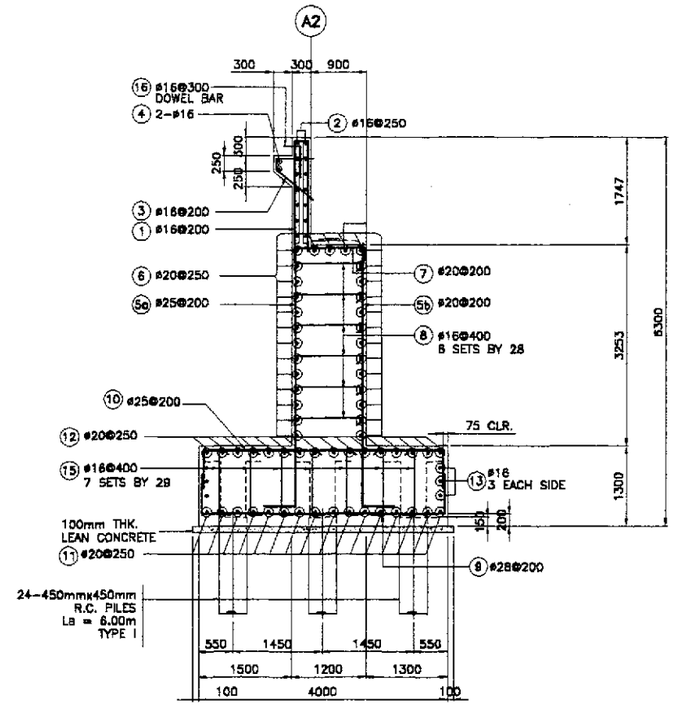

3 SECTION
SCALE 1:50

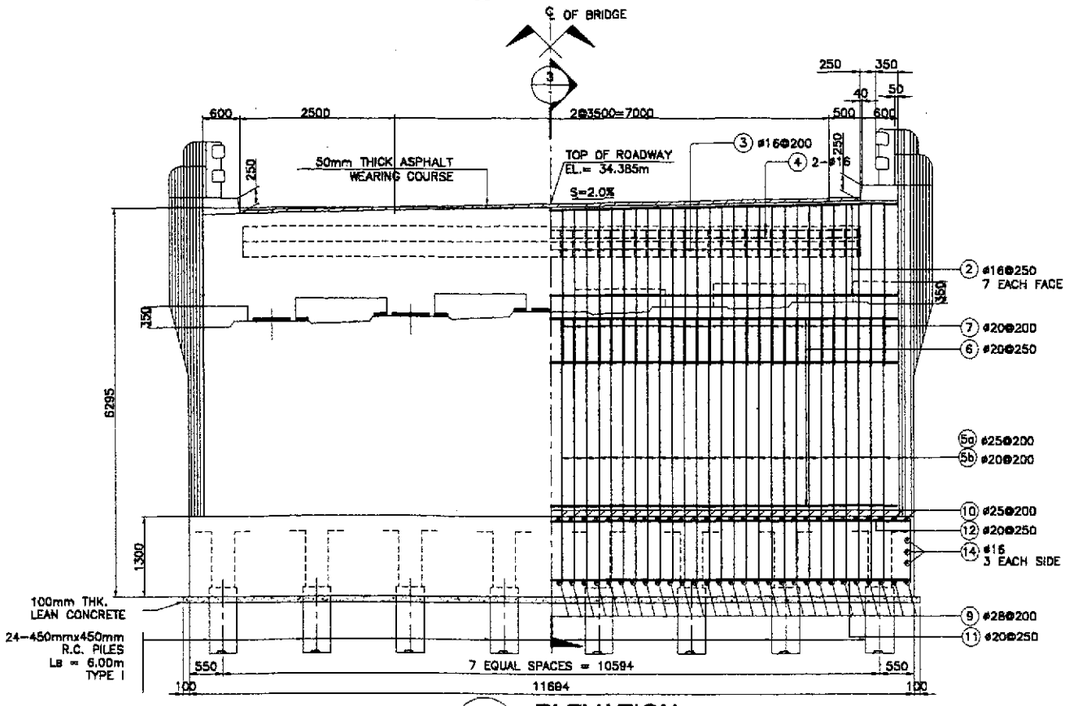

2 ELEVATION
SCALE 1:50

BAR BENDING DIAGRAM

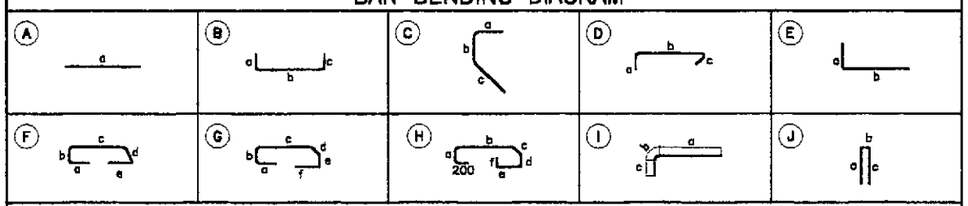

SCHEDULE OF REINFORCEMENT PER ABUTMENT

LOCATION	CONCRETE VOLUME (m^3)	BAR MARK	BAR SIZE	QTY.	SPACING	BAR SHAPE	DIMENSIONS (mm) OUT TO OUT a	b	c	d	e	f	LENGTH EA. BAR (mm)	TOTAL LENGTH (m)	UNIT WT. (kg/m)	WEIGHT (kg)	REBAR RATIO (kg/m^3)
BACKWALL	6.99	①	16	57	200	B	2000	200	2000	–	–	–	4200	239.40	1.579	378	112.65
		②	16	14	250	A	11500	–	–	–	–	–	11500	161.00	1.579	255	
		③	16	51	200	C	600	150	750	–	–	–	1500	76.50	1.579	121	
		④	16	2	AS SHOWN	A	10250	–	–	–	–	–	10250	20.50	1.579	33	
MAINWALL	43.72	⑤a	25	57	200	E	400	4300	–	–	–	–	4700	267.90	3.854	1033	72.44
		⑤b	20	57	200	E	400	4300	–	–	–	–	4700	267.90	2.466	661	
		⑥	20	29	250	A	11500	–	–	–	–	–	11500	333.50	2.466	823	
		⑦	20	57	200	B	250	1100	250	–	–	–	1600	91.20	2.466	225	
		⑧	16	168	400	D	250	1100	250	–	–	–	1600	268.80	1.579	425	
FOOTING	81.00	⑨	28	59	200	B	700	3650	700	–	–	–	5250	309.75	4.833	1498	72.62
		⑩	25	59	200	B	700	3650	700	–	–	–	5250	309.75	3.854	1194	
		⑪	20	16	250	B	700	11950	700	–	–	–	13400	214.40	2.466	529	
		⑫	20	16	250	B	700	11950	700	–	–	–	13400	214.40	2.466	529	
		⑬	16	6	AS SHOWN	A	12000	–	–	–	–	–	12000	72.00	1.579	114	
		⑭	16	6	AS SHOWN	A	3850	–	–	–	–	–	3850	23.10	1.579	37	
		⑮	16	203	400	D	250	1150	250				1650	334.95	1.579	529	
DOWEL		⑯	16	34	300	E	650	500	–	–	–	–	1150	39.10	1.579	62	
TOTAL	111.72														GRADE 40 TOTAL = 6,492 kgs. GRADE 60 TOTAL = 1,855 kgs.		

JICA
JAPAN INTERNATIONAL COOPERATION AGENCY
KEI KATAHIRA & ENGINEERS INTERNATIONAL
YEO YACHIYO ENGINEERING CO., LTD.

	DATE	SIGNATURE
DESIGNED	10/09/02	P. GONZALES
CHECKED	10/16/02	
SUBMITTED	10/18/02	M. KUCHI TEAM LEADER

REPUBLIC OF THE PHILIPPINES
DEPARTMENT OF PUBLIC WORKS AND HIGHWAYS

PUHL – PMO	BUREAU OF DESIGN		OFFICE OF THE SECRETARY	
Submitted By:	Reviewed By:	Recommended By:	Recommended By: (See cover sheet for Signature)	Approved By: (See cover sheet for Signature/Approval)
DANILO C. TRAJANO	ADRIANO M. DOROY	GILBERTO S. REYES	MANUEL M. BONDAN	SIMEON A. DATUMANONG
Project Director	Chief, Bridges Division	Director IV (OIC)	Undersecretary	Secretary

PROJECT AND LOCATION :
THE DETAILED DESIGN STUDY ON UPGRADING INTER-URBAN HIGHWAY SYSTEM ALONG THE PAN-PHILIPPINE HIGHWAY (Plaridel, Cabanatuan and San Jose Bypasses)
CABANATUAN BYPASS - CONTRACT PACKAGE II

SCALE : 1 : 50 FULL SIZE A1

SHEET CONTENTS :
BRIDGE NO. 4
ABUTMENT A2
MAINWALL REINFORCEMENT DETAILS
(ULTIMATE STAGE)

SHEET NO. : B4-08

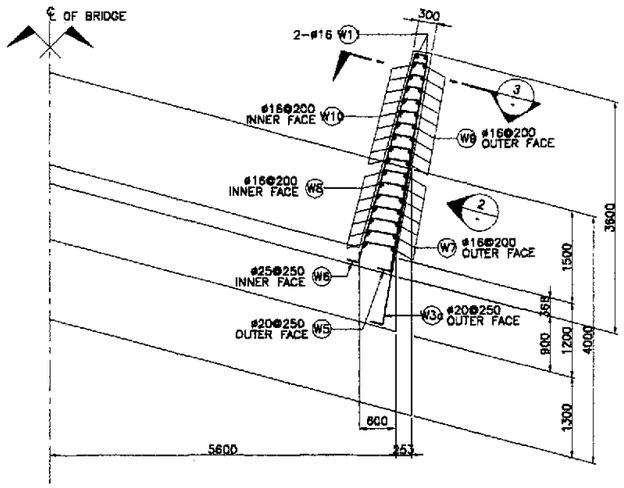

1 PLAN
SCALE 1:50

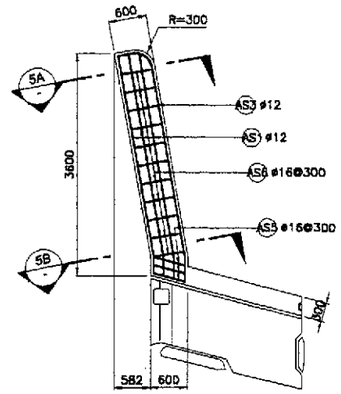

4 SIDEWALK DETAIL
SCALE 1:50

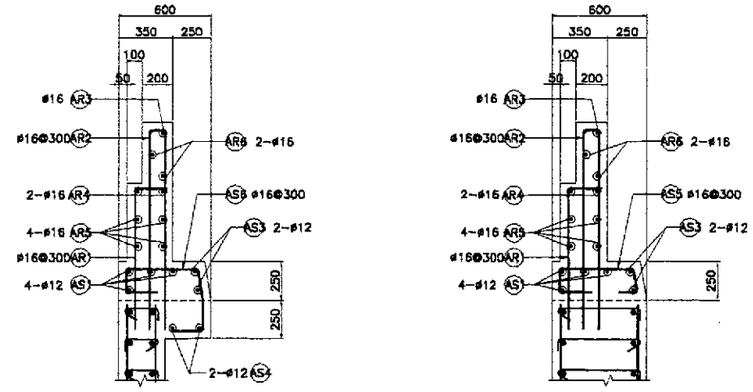

5A SECTION
SCALE 1:20

5B SECTION
SCALE 1:20

5 APPROACH RAIL DETAILS
SCALE 1:20

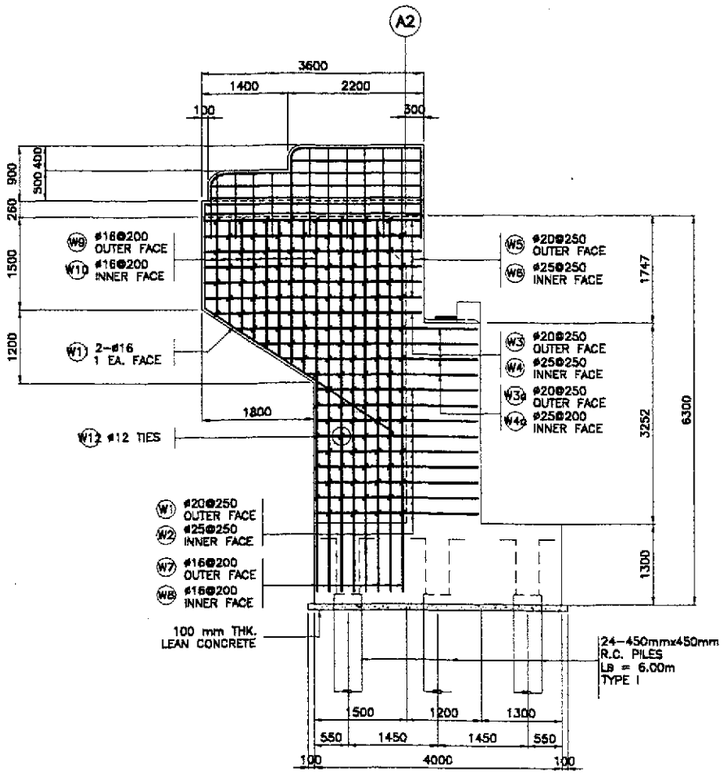

2 WINGWALL ELEVATION
SCALE 1:50

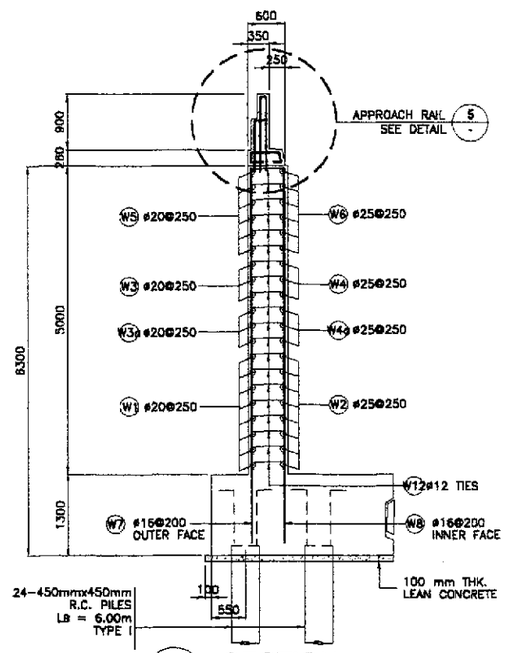

3 SECTION
SCALE 1:50

BAR BENDING DIAGRAM

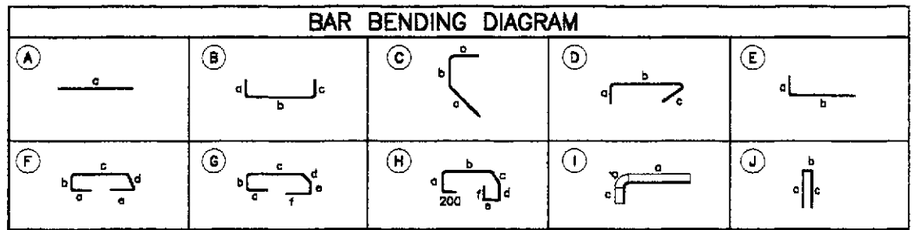

SCHEDULE OF REINFORCEMENT PER ABUTMENT

LOCATION	CONCRETE VOLUME (m^3)	BAR MARK	BAR SIZE	QTY.	SPACING	BAR SHAPE	DIMENSIONS (mm) OUT TO OUT a	b	c	d	e	f	LENGTH EA. BAR (mm)	TOTAL LENGTH (m)	UNIT WT. (kg/m)	WEIGHT (kg)	REBAR RATIO (kg/m^3)
WINGWALL	10.15	W1	20	18	250	B	400	2600	150	–	–	–	3150	56.70	2.466	140	152.09
		W2	25	18	250	B	400	2600	150	–	–	–	3150	56.70	3.854	219	
		W3	20	2	250	B	400	3400	150	–	–	–	3950	7.10	2.466	20	
		W3a	20	8	250	B	400	3350	150	–	–	–	3900	31.20	2.466	77	
		W4	25	2	250	B	400	3400	150	–	–	–	3950	7.90	3.854	31	
		W4a	25	8	250	B	400	3350	150	–	–	–	3900	31.20	3.854	121	
		W5	20	12	250	B	400	3500	150	–	–	–	4050	48.60	2.466	120	
		W6	25	12	250	B	400	3500	150	–	–	–	4050	48.60	3.854	188	
		W7	16	16	200	E	250	6050	–	–	–	–	6300	100.80	1.579	160	
		W8	16	16	200	E	250	6050	–	–	–	–	6300	100.80	1.579	160	
		W9	16	16	250	E	250	2000	–	–	–	–	2250	36.00	1.579	57	
		W10	16	16	250	E	250	2000	–	–	–	–	2250	36.00	4.579	57	
		W11	16	4	AS SHOWN	C	250	1500	3500	–	–	–	5250	21.00	1.579	34	
		W12	12	206	AS SHOWN	D	170	450	170	–	–	–	790	160.12	0.888	160	
														GRADE 60 TOTAL = 916 kgs. GRADE 40 TOTAL = 628 kgs.			
APPROACH RAILING AND SIDEWALK	3.03	AS1	12	8	AS SHOWN	A	3500	–	–	–	–	–	3500	28.00	0.888	25	97.16
		AS2	12	4	AS SHOWN	A	3500	–	–	–	–	–	3500	14.00	0.888	13	
		AS3	12	4	AS SHOWN	A	3500	–	–	–	–	–	3500	14.00	0.888	13	
		AS4	16	6	300	F	200	170	480	200	200	–	1250	7.50	1.579	12	
		AS5	16	22	300	G	200	170	480	200	170	200	1420	31.24	1.579	50	
		AR1	16	8	300	E	200	900	–	–	–	–	1100	8.80	1.579	14	
		AR2	16	16	300	J	1300	120	1300	–	–	–	2720	43.52	1.579	69	
		AR3	16	2	AS SHOWN	I	2100	236	1300	–	–	–	3636	7.27	1.579	12	
		AR4	16	4	AS SHOWN	I	3400	236	900	–	–	–	4536	18.14	1.579	29	
		AR5	16	8	AS SHOWN	A	3400	–	–	–	–	–	3400	27.20	1.579	43	
		AR6	16	4	AS SHOWN	A	2100	–	–	–	–	–	2100	8.40	1.579	14	
														GRADE 40 TOTAL= 294 kgs.			
TOTAL	12.33													GRADE 60 TOTAL = 916 kgs. GRADE 40 TOTAL = 822 kgs.			

JICA
JAPAN INTERNATIONAL COOPERATION AGENCY

KEI KATAHIRA & ENGINEERS INTERNATIONAL
YEO YACHIYO ENGINEERING CO., LTD.

	DATE	SIGNATURE
DESIGNED	10/09/02	A. P. GONZALES
CHECKED	10/16/02	
SUBMITTED	10/18/02	TEAM LEADER

REPUBLIC OF THE PHILIPPINES
DEPARTMENT OF PUBLIC WORKS AND HIGHWAYS

PJHL – PMO	BUREAU OF DESIGN		OFFICE OF THE SECRETARY	
Submitted By:	Reviewed By:	Recommended By:	Recommended By: (See cover sheet for Signature)	Approved By: (See cover sheet for Signature/Approved)
DANILO C. TRAJANO	ADRIANO M. DOROY	GILBERTO S. REYES	MANUEL M. BONDAN	SIMEON A. DATUMANONG
Project Director	Chief, Bridges Division	Director IV (OIC)	Undersecretary	Secretary

PROJECT AND LOCATION :
THE DETAILED DESIGN STUDY ON UPGRADING INTER-URBAN HIGHWAY SYSTEM ALONG THE PAN-PHILIPPINE HIGHWAY (Plaridel, Cabanatuan and San Jose Bypasses)
CABANATUAN BYPASS - CONTRACT PACKAGE II

SCALE : AS SHOWN
FULL SIZE A1

SHEET CONTENTS :
BRIDGE NO. 4
ABUTMENT A2
WINGWALL REINFORCEMENT DETAILS
(ULTIMATE STAGE)

SHEET NO. : B4-09

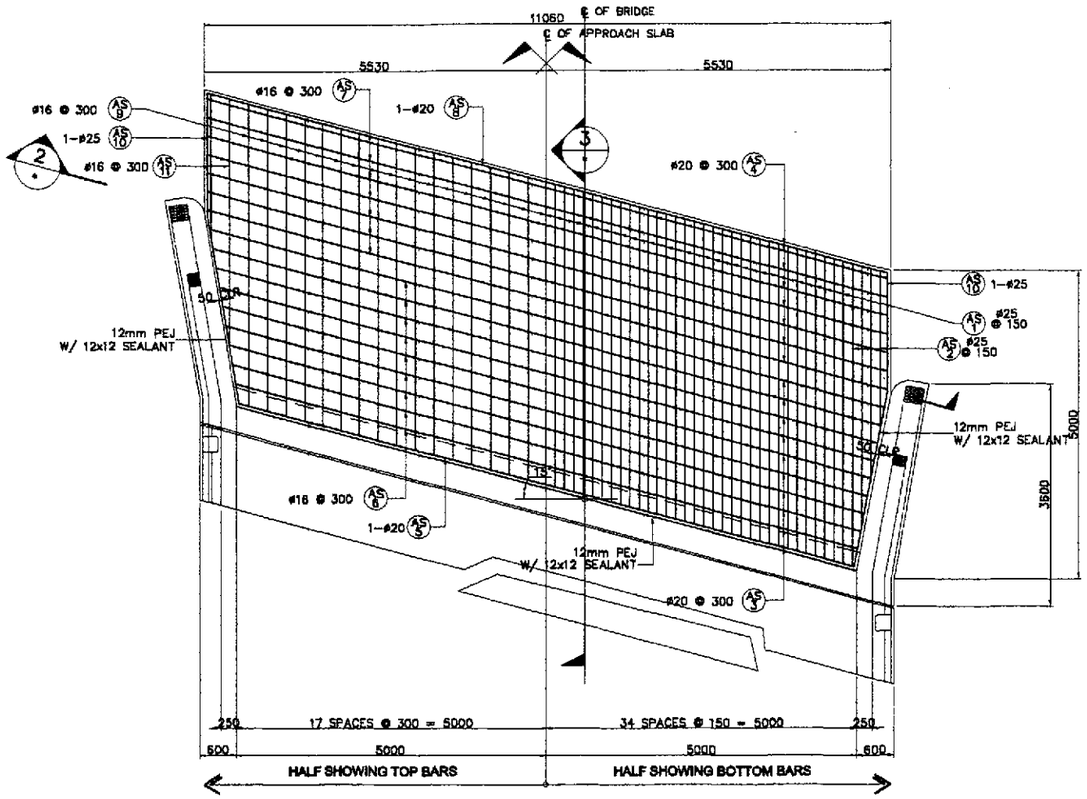

1 PLAN
SCALE 1:50

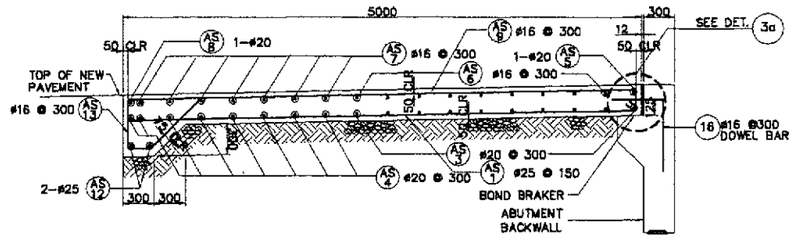

3 SECTION
SCALE 1:30

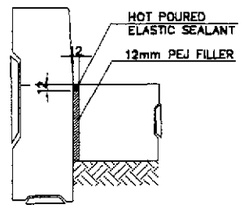

2a DETAIL
SCALE 1:10

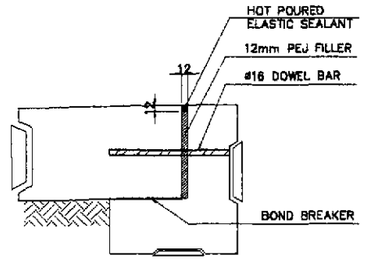

3a DETAIL
SCALE 1:10

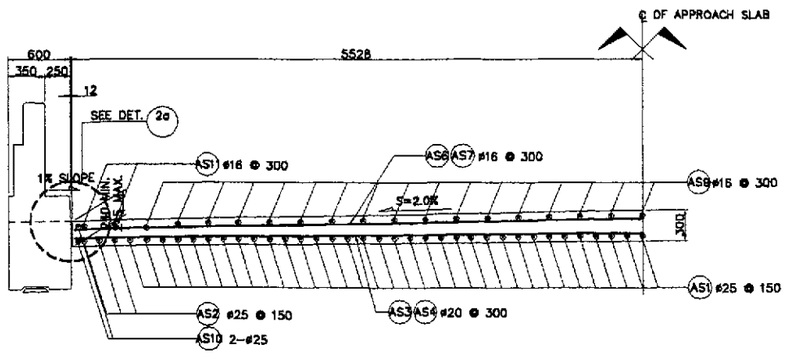

2 SECTION
SCALE 1:30

BAR BENDING DIAGRAM

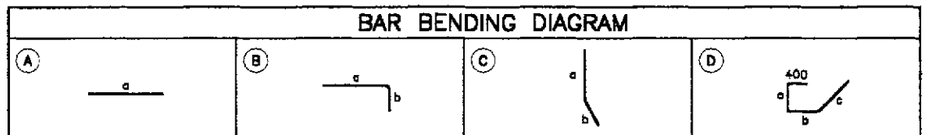

SCHEDULE OF REINFORCEMENT PER APPROACH SLAB

LOCATION	CONCRETE VOLUME (m^3)	BAR MARK	BAR SIZE	QTY.	SPACING	BAR SHAPE	DIMENSIONS (mm) OUT TO OUT a	b	c	d	e	f	LENGTH EA. BAR (mm)	TOTAL LENGTH (m)	UNIT WEIGHT (kg/m)	WEIGHT (kg)	REBAR RATIO (kg/cu.m)
APPROACH SLAB	17.61	AS1	25	68	150	B	4900	200	–	–	–	–	5100	346.80	3.854	1337	161.42
		AS2	25	6	150	B	3350	200	–	–	–	–	3550	21.30	3.854	83	
		AS3	20	10	300	A	11200	–	–	–	–	–	11200	112.00	2.466	277	
		AS4	20	8	300	A	11750	–	–	–	–	–	11750	94.00	2.466	232	
		AS5	20	1	AS SHOWN	A	10700	–	–	–	–	–	10700	10.70	2.466	27	
		AS6	16	9	300	A	11250	–	–	–	–	–	11250	101.25	1.579	160	
		AS7	16	7	300	A	11750	–	–	–	–	–	11750	82.25	1.579	130	
		AS8	20	1	AS SHOWN	A	11750	–	–	–	–	–	11750	11.75	2.466	29	
		AS9	16	34	300	B	4900	200	–	–	–	–	5100	173.40	1.579	274	
		AS10	25	4	AS SHOWN	C	2000	3100	–	–	–	–	5100	20.40	3.854	79	
		AS11	16	2	300	B	3950	200	–	–	–	–	4150	8.30	1.579	14	
		AS12	25	2	AS SHOWN	A	11750	–	–	–	–	–	11750	23.50	3.854	91	
		AS13	16	38	300	D	400	500	200	700	–	–	1800	68.40	1.579	109	
TOTAL	17.61															GRADE 40 TOTAL = 887 kgs. GRADE 60 TOTAL = 2,155 kgs.	

JICA
JAPAN INTERNATIONAL COOPERATION AGENCY
KEI KATAHIRA & ENGINEERS INTERNATIONAL
YEO YACHIYO ENGINEERING CO., LTD.

	DATE	SIGNATURE
DESIGNED	20/09/01	E. AL SALLAN
CHECKED	10/10/01	
SUBMITTED	10/15/01	M. RICOCHI TEAM LEADER

REPUBLIC OF THE PHILIPPINES
DEPARTMENT OF PUBLIC WORKS AND HIGHWAYS

PJHL – PMO	BUREAU OF DESIGN		OFFICE OF THE SECRETARY	
Submitted By:	Reviewed By:	Recommended By:	Recommended By: (See cover sheet for Signature)	Approved By: (See cover sheet for Signature/Approval)
DANILO C. TRAJANO	ADRIANO M. DOROY	GILBERTO S. REYES	MANUEL M. BONDAN	SIMEON A. DATUMANONG
Project Director	Chief, Bridges Division	Director IV (OIC)	Undersecretary	Secretary

PROJECT AND LOCATION :
THE DETAILED DESIGN STUDY ON UPGRADING INTER-URBAN HIGHWAY SYSTEM ALONG THE PAN-PHILIPPINE HIGHWAY (Plaridel, Cabanatuan and San Jose Bypasses)
CABANATUAN BYPASS - CONTRACT PACKAGE II

SCALE :
AS SHOWN
FULL SIZE A1

SHEET CONTENTS :
BRIDGE NO. 4 & 5
APPROACH SLAB PLAN SECTIONS AND DETAIL (ULTIMATE STAGE)

SHEET NO. :
B4-10

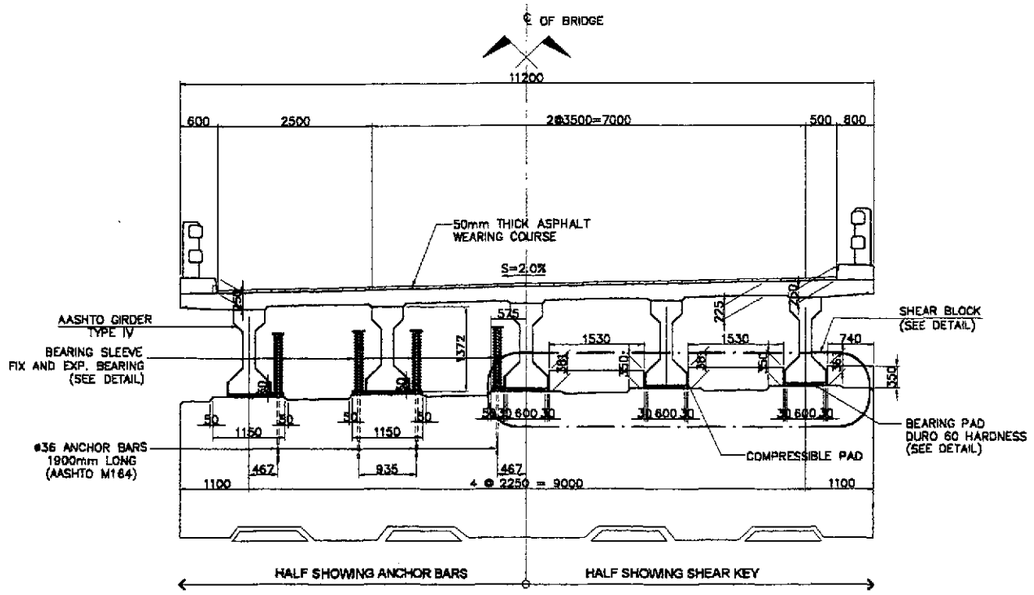

1 SECTION AT ABUTMENT SEAT
SCALE 1:50

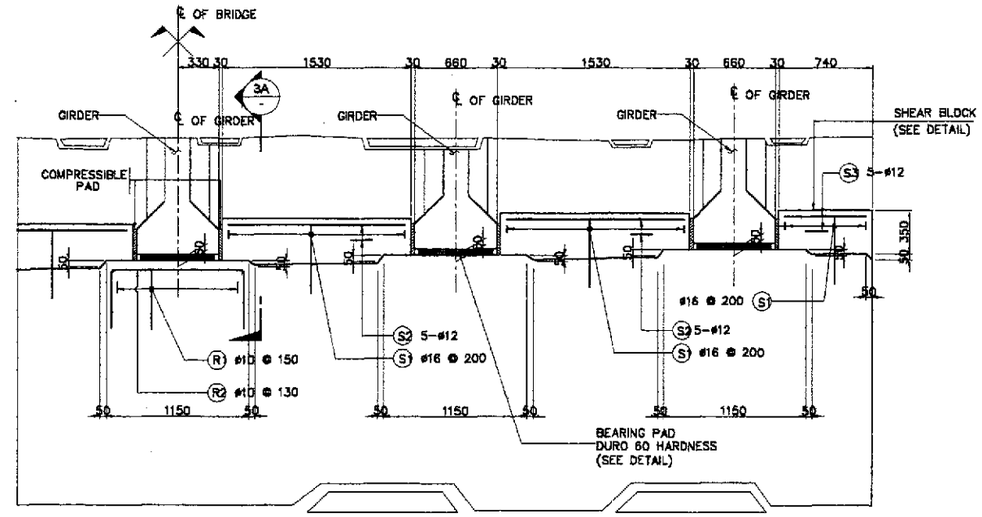

3 SHEAR BLOCK DETAIL
SCALE 1:25

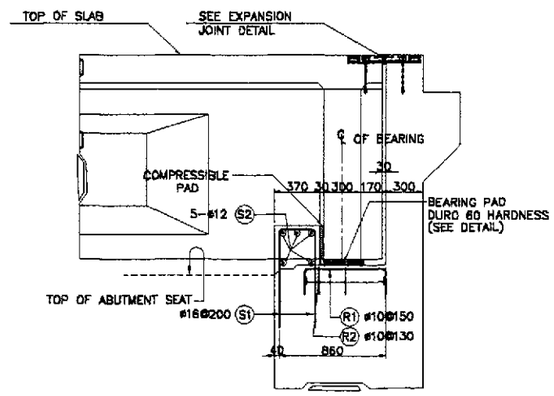

3A SECTION
SCALE 1:25

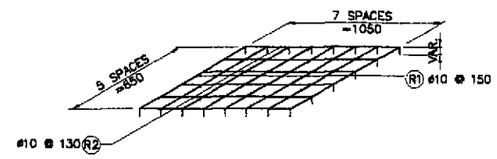

4 RISER REINFORCEMENT
NOT TO SCALE

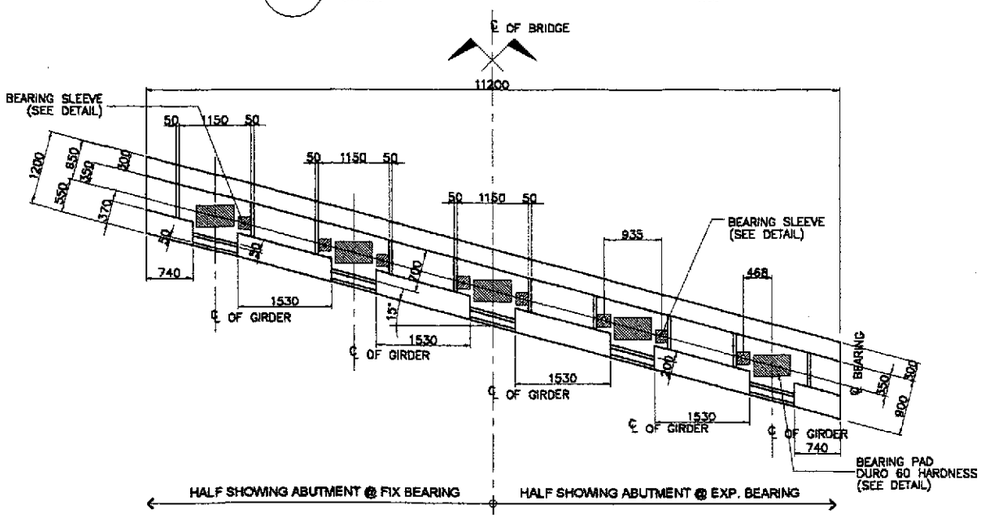

2 PLAN AT ABUTMENT SEAT
SCALE 1:50

BAR BENDING DIAGRAM

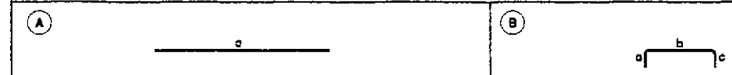

SCHEDULE OF REINFORCEMENT

LOCATION	CONCRETE VOLUME (m^3)	BAR MARK	BAR SIZE	QTY.	SPACING	BAR SHAPE	DIMENSION(mm) OUT TO OUT a	b	c	d	e	LENGTH EACH BAR (m)	TOTAL LENGTH (m)	UNIT WEIGHT (kg/m)	WEIGHT (kg)	REBAR RATIO (kg/m^3)
SHEAR KEY & RISER	1.42	S1	16	40	200	B	560	300	560			1420	56.80	1.579	90	144.83
		S2	12	20	AS SHOWN	A	1500					1450	30.00	0.888	26	
		S3	12	10	AS SHOWN	A	680					680	6.80	0.888	6	
		R1	10	40	150	B	500	670	500			1670	66.80	0.616	41	
		R2	10	30	130	B	500	1090	500			2090	62.70	0.616	38	
TOTAL	1.42	GRADE 40 TOTAL = 205 kgs.														

THE REINFORCEMENT SHOWN ON THIS TABLE IS FOR REFERENCE ONLY. THE CONTRACTOR SHOULD CHECK AND VERIFY ALL DIMENSIONS, SIZES AND QUANTITIES OF REINFORCEMENT.

JICA
JAPAN INTERNATIONAL COOPERATION AGENCY
KEI KATAHIRA & ENGINEERS INTERNATIONAL
YEC YACHIYO ENGINEERING CO., LTD.

	DATE	SIGNATURE
DESIGNED	10/09/02	E. N. SALLAN
CHECKED	10/16/02	
SUBMITTED	10/18/02	TEAM LEADER

REPUBLIC OF THE PHILIPPINES
DEPARTMENT OF PUBLIC WORKS AND HIGHWAYS

PMHL – PMO	BUREAU OF DESIGN		OFFICE OF THE SECRETARY	
Submitted By:	Reviewed By:	Recommended By:	Recommended By: (See cover sheet for Signature)	Approved By: (See cover sheet for Signature/Approval)
DANILO C. TRAJANO	ADRIANO M. DOROY	GILBERTO S. REYES	MANUEL M. BONOAN	SIMEON A. DATUMANONG
Project Director	Chief, Bridges Division	Director IV (OIC)	Undersecretary	Secretary

PROJECT AND LOCATION :
THE DETAILED DESIGN STUDY ON UPGRADING INTER-URBAN HIGHWAY SYSTEM ALONG THE PAN-PHILIPPINE HIGHWAY (Plaridel, Cabanatuan and San Jose Bypasses)
CABANATUAN BYPASS - CONTRACT PACKAGE II

SCALE : AS SHOWN
FULL SIZE A1

SHEET CONTENTS :
BRIDGE NO. 4 & 5
SHEAR KEY AND RISER DETAILS AT ABUTMENT (ULTIMATE STAGE)

SHEET NO. : B4-11

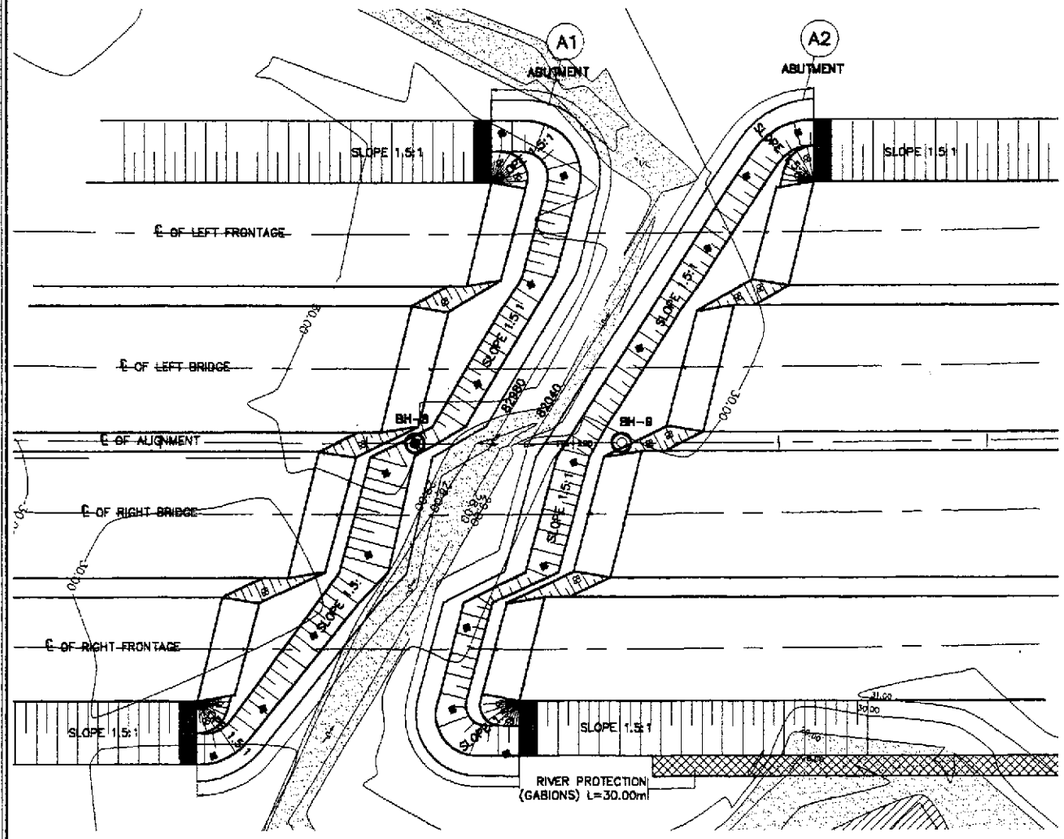

1A PLAN
SCALE 1:300

GENERAL NOTES:

1. GROUTED RIPRAP (250mm–300mmDIA.) SHALL BE USED FOR THE FACING AND SHALL BE CAREFULLY HANDLAID WITH THE LONGEST DIMENSIONS PERPENDICULAR TO THE SLOPE AND FIRMLY BEDDED INTO THE SLOPE AND ADJACENT TO THE ADJOINING BOULDERS SPACED BETWEEN THE BOULDERS. THE SPACE BETWEEN THE BOULDERS SHALL BE COMPLETELY FILLED WITH MORTAR. THE OUTSIDE SURFACE OF THE BOULDERS SHALL BE LEFT EXPOSED AND THE SURFACE OF THE MORTAR SHALL BE SWEPT WITH A STIFF BROOM.
2. GEOTEXTILE
   THE FOLLOWING SPECIFICATIONS ARE REQUIRED:
   1. POLYESTER OR POLYPROPELINE – 100%
   2. MECHANICALLY BONDED/HEAT BONDED
   3. NON–WOVEN
   4. EFFECTIVE OPENING SIZE – 110 MICRONS (MAX.)
   5. THICKNESS UNDER PRESSURE – 0.80mm (MIN.)
   6. WEIGHT – 200g/sq. m. (MIN.)
   7. CBR PUNCTURE STRENGTH – 400N (MIN.)
   8. MULTI–DIRECTIONAL TENSILE STRENGTH – 13KN/m
3. GRAVEL FILTER SHALL BE COARSE AGGREGATES MATERIALS WHICH SATISFY THE REQUIREMENTS FOR ITEM 405, STRUCTURAL CONCRETE, GRADING B OF TABLE 405.1 AS REVISED.
4. HAND–LAID ROCK SHALL BE MORE THAN 0.015cu.m. IN VOLUME AND SHALL CONSISTS OF HARD AND DURABLE STONES. ALL SHALL BE LAID FLAT AND SECURELY PLACED WITH LARGER STONES GENERALLY LOCATED IN THE LOWER PART OF THE STRUCTURE.
5. RUBBLE CONCRETE SHALL BE CLASS "B" (1:2.5:5) MIX CONCRETE WITH BOULDERS EMBEDDED THEREIN. BOULDERS 250–300mmø SHALL BE CAREFULLY HAND–LAID WITHIN THE CONCRETE SECTION. THE BOULDERS SHALL BE THOROUGHLY INCORPORATED INTO THE CONCRETE MASS WITH A COVER OF 30mm AND NOT LESS THAN 30mm APART. THE RUBBLE CONCRETE SHALL BE COMPOSED OF 40 % CLASS "B" CONCRETE AND 60 % BOULDERS.
6. FOR THE LOOSE BOULDER APRON, BOULDERS 350–450mmø SHALL BE HAND–LAID, CLOSE TOGETHER AND SHALL BE FIRMLY BEDDED. ALL VOIDS BETWEEN BOULDERS SHALL BEFILLED WITH GRAVEL AND THE JOINTS FILLED WITH TIGHTLY DRIVEN SPALLS.
7. CURTAIN WALLS SHALL BE USED AT BOTH ENDS OF THE LOOSE BOULDER APRON BANK PROTECTION WORKS. BOULDERS SHALL BE CAREFULLY HAND–LAID AND EMBEDDED INTO THE CONCRETE SECTION.
8. NO CONCRETING UNDER WATER SHALL BE PERMITTED.
9. PROVIDE 1.0 m. BERM WHEN HEIGHT (H) IS > 4.0 m.

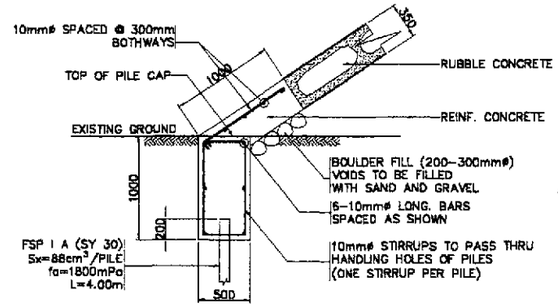

3 CAPPING AND SHEET PILE CONNECTION
SCALE 1:30

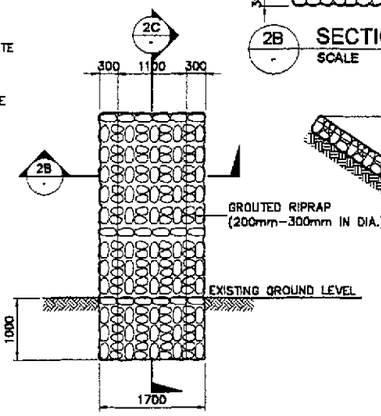

2A ELEVATION
SCALE 1:50

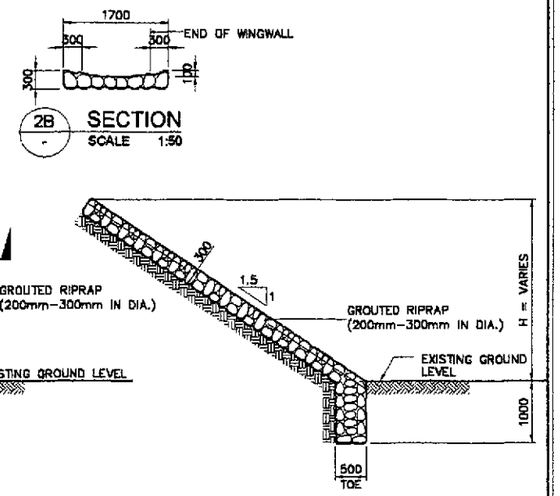

2C SECTION
SCALE 1:50

2 TYPICAL SIDE DRAIN DETAIL
SCALE AS SHOWN

VELOCITY (m/sec)	ROCK SIZE (mm)	
	VERY TURBULENT FLOW	SMOOTH FLOW
1.00	40	–
1.50	135	–
2.00	170	–
2.50	255	137
3.00	370	197
3.50	515	270
4.00	690	350
4.50	825	425
5.00	>900	590

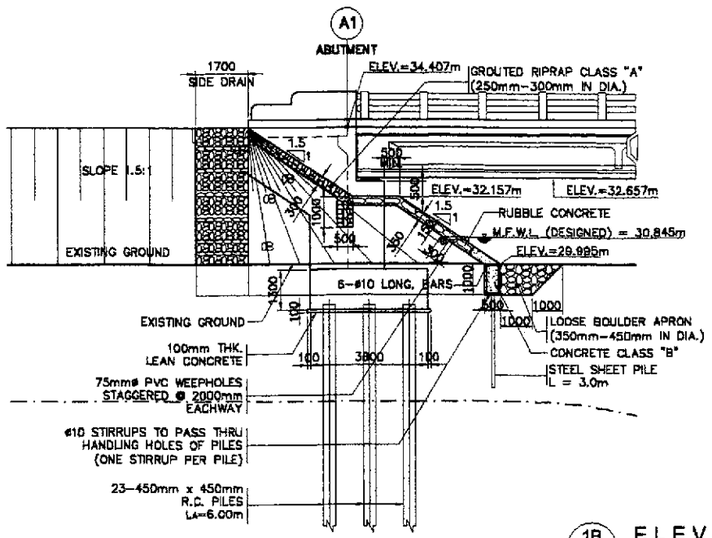

1B ELEVATION
SCALE 1:100

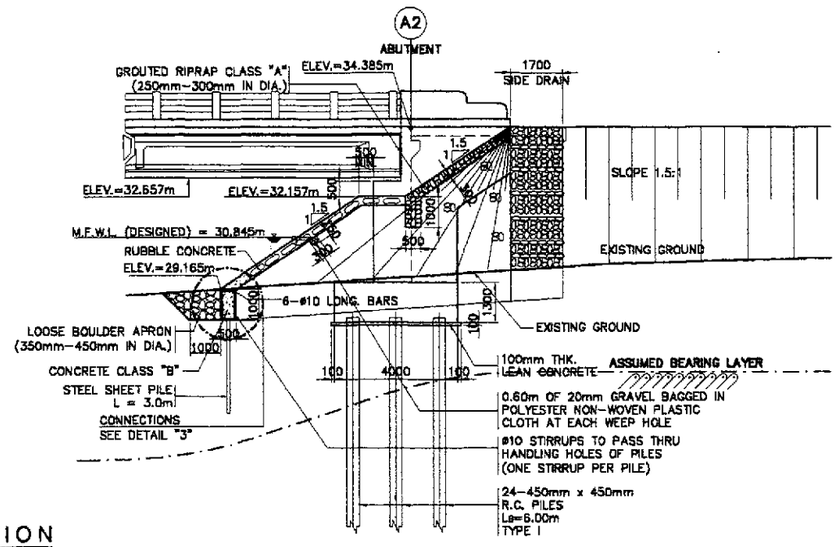

1 ABUTMENT SLOPE PROTECTION
SCALE AS SHOWN

PER ABUTMENT

LOCATION	SIZES	QUANTITY	
		ABUT. A1	ABUT. A2
CONC. CLASS "B"	1000 x 500 x LENGTH	30.52 cu. m.	29.97 cu. m.
BOULDER APRON	350mm–450mm IN DIA.	91.56 cu. m.	89.91 cu. m.
RUBBLE CONCRETE	250mm–300mm IN DIA.	97.12 cu. m.	92.85 cu. m.
SHEET PILE	85 x 400 x 8mm THK.	134.00 pcs.	132.00 pcs.
SIDE DRAIN	200mm–300mm IN DIA.	9.06 cu. m.	8.57 cu. m.
GROUTED RIPRAP	250mm–300mm IN DIA.	31.83 cu. m.	32.38 cu. m.

JICA
JAPAN INTERNATIONAL COOPERATION AGENCY
KEI KATAHIRA & ENGINEERS INTERNATIONAL
YEC YACHIYO ENGINEERING CO., LTD.

	DATE	SIGNATURE
DESIGNED	10/09/02	A. P. GONZALES
CHECKED	10/16/02	
SUBMITTED	10/18/02	TEAM LEADER

REPUBLIC OF THE PHILIPPINES
DEPARTMENT OF PUBLIC WORKS AND HIGHWAYS

PJHL – PMO	BUREAU OF DESIGN		OFFICE OF THE SECRETARY	
Submitted By:	Reviewed By:	Recommended By:	Recommended By: (See cover sheet for Signature)	Approved By: (See cover sheet for Signature/Approval)
DANILO C. TRAJANO	PERFECTO L. ZAPLAN JR.	GILBERTO S. REYES	MANUEL M. BONOAN	SIMEON A. DATUMANONG
Project Director	Chief, Hydraulics Division (OIC)	Director IV (OIC)	Undersecretary	Secretary

PROJECT AND LOCATION :
THE DETAILED DESIGN STUDY ON UPGRADING INTER-URBAN HIGHWAY SYSTEM ALONG THE PAN-PHILIPPINE HIGHWAY (Plaridel, Cabanatuan and San Jose Bypasses)
CABANATUAN BYPASS - CONTRACT PACKAGE II

SCALE : AS SHOWN
FULL SIZE A1

SHEET CONTENTS :
BRIDGE NO. 4
ABUTMENT PROTECTION AND SIDE DRAIN DETAILS (ULTIMATE STAGE)

SHEET NO. : B4-12